L-force catalogue

Automation systems
Drive solutions

Controls
Inverters
Motors
Gearboxes
Engineering Tools

Motors: MH three-phase AC motors, MD three-phase AC motors

Gearboxes: GKR bevel gearboxes, GKS helical-bevel gearboxes, GSS helical-worm gearboxes

Lenze
As easy as that.

Contents of the L-force catalogue

About Lenze		Lenze makes many things easy for you.	
		A matter of principle: the right products for every application.	
		L-force product portfolio	
Automation systems		Controller-based Automation	1.1
		Drive-based automation	1.2
Drive solutions		HighLine tasks	2.1
		StateLine tasks	2.2
		BaseLine tasks	2.3
Controls	Cabinet Controller	Controller 3200 C	3.1
		I/O system 1000	3.2
	Panel Controller	Controller p500	3.3
		Monitor Panel	3.4
Inverters	Decentralised	Inverter Drives 8400 protec	4.1
		Inverter Drives 8400 motec	4.2
		Inverter Drives SMV IP65	4.3
	Cabinet	Servo Drives 9400 HighLine	4.4
		Inverter Drives 8400 TopLine	4.5
		Servo Inverters i700	4.6
		Inverter Drives 8400 HighLine	4.7
		Inverter Drives 8400 StateLine	4.8
		Inverter Drives SMV IP31	4.9
		Inverter Drives 8400 BaseLine	4.10
Motors	Servo motors	MCS synchronous servo motors	5.1
		MD□KS synchronous servo motors	5.2
		MQA asynchronous servo motors	5.3
		MCA asynchronous servo motors	5.4
	Three-phase AC motors	MF three-phase AC motors	5.5
		MH three-phase AC motors	5.6
		MD three-phase AC motors	5.7
		m300 Lenze Smart Motor	5.8
		MD/MH basic three-phase AC motors	5.9
Gearboxes	Axial gearbox	g700-P planetary gearbox	6.1
		MPR/MPG planetary gearboxes	6.2
		g500-H helical gearbox	6.3
		GST helical gearboxes	6.4
		g500-S shaft-mounted helical gearbox	6.5
		GFL shaft-mounted helical gearboxes	6.6
	Right-angle gearbox	g500-B bevel gearbox	6.7
		GKR bevel gearboxes	6.8
		GKS helical-bevel gearboxes	6.9
		GSS helical-worm gearboxes	6.10
	Motor data	Assignment see above	6.11
Engineering Tools		Navigator	7.1
		Drive Solution Designer	7.2
		Drive Solution Catalogue	7.3
		Engineer	7.4
		PLC Designer	7.5
		VisiWinNET®	7.6
		EASY Starter	7.7

Selected portfolio

Additional portfolio

Lenze makes many things easy for you.

With our motivated and committed approach, we work together with you to create the best possible solution and set your ideas in motion - whether you are looking to optimise an existing machine or develop a new one. We always strive to make things easy and seek perfection therein. This is anchored in our thinking, in our services and in every detail of our products. It's as easy as that!

1

Developing ideas

Are you looking to build the best machine possible and already have some initial ideas? Then get these down on paper together with us, starting with small innovative details and stretching all the way to completely new machines. Working together, we will develop an intelligent and sustainable concept that is perfectly aligned with your specific requirements.

2

Drafting concepts

We see welcome challenges in your machine tasks, supporting you with our comprehensive expertise and providing valuable impetus for your innovations. We take a holistic view of the individual motion and control functions here and draw up consistent, end-to-end drive and automation solutions for you - keeping everything as easy as possible and as extensive as necessary.

3

Implementing solutions

Our easy formula for satisfied customers is to establish an active partnership with fast decision-making processes and an individually tailored offer. We have been using this simple principle to meet the ever more specialised customer requirements in the field of mechanical engineering for many years.

4

Manufacturing machines

Functional diversity in perfect harmony: as one of the few full-range providers in the market, we can provide you with precisely those products that you actually need for any machine task – no more and no less. Our L-force product portfolio, a consistent platform for implementing drive and automation tasks, is invaluable in this regard.

5

Ensuring productivity

Productivity, reliability and new performance peaks on a daily basis – these are our key success factors for your machine. After delivery, we offer you cleverly devised service concepts to ensure continued safe operation. The primary focus here is on technical support, based on the excellent application expertise of our highly-skilled and knowledgeable after-sales team.

A matter of principle: the right products for every application.

Lenze's extensive L-force product portfolio follows a very simple principle. The functions of our finely scaled products are assigned to the three lines Base-Line, State-Line or High-Line.

But what does this mean for you? It allows you to quickly recognise which products represent the best solution for your own specific requirements.

Powerful products with a major impact:
- Easy handling
- High quality and durability
- Reliable technologies in tune with the latest developments

Lenze products undergo the most stringent testing in our own laboratory. This allows us to ensure that you will receive consistently high quality and a long service life. In addition to this, five logistics centres ensure that the Lenze products you select are available for quick delivery anywhere across the globe. It's as easy as that!

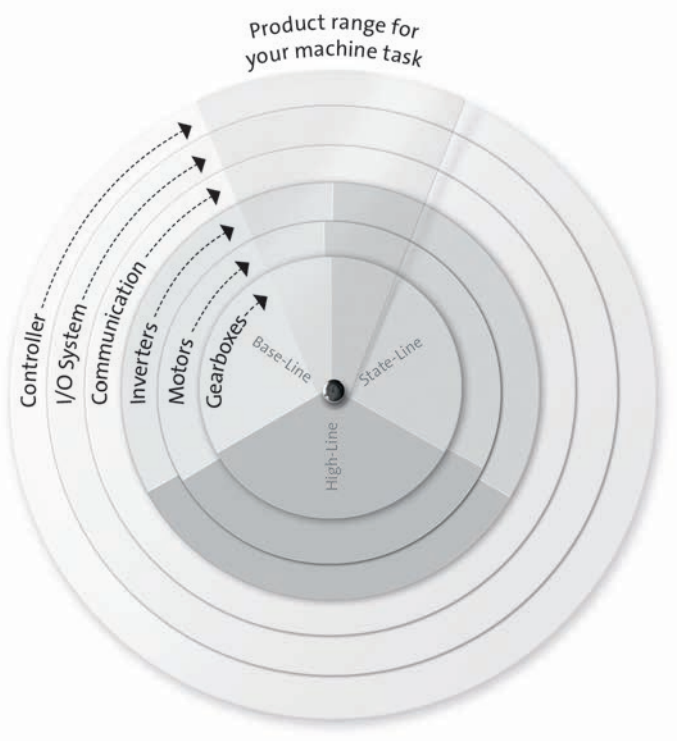

L-force product portfolio

Controls

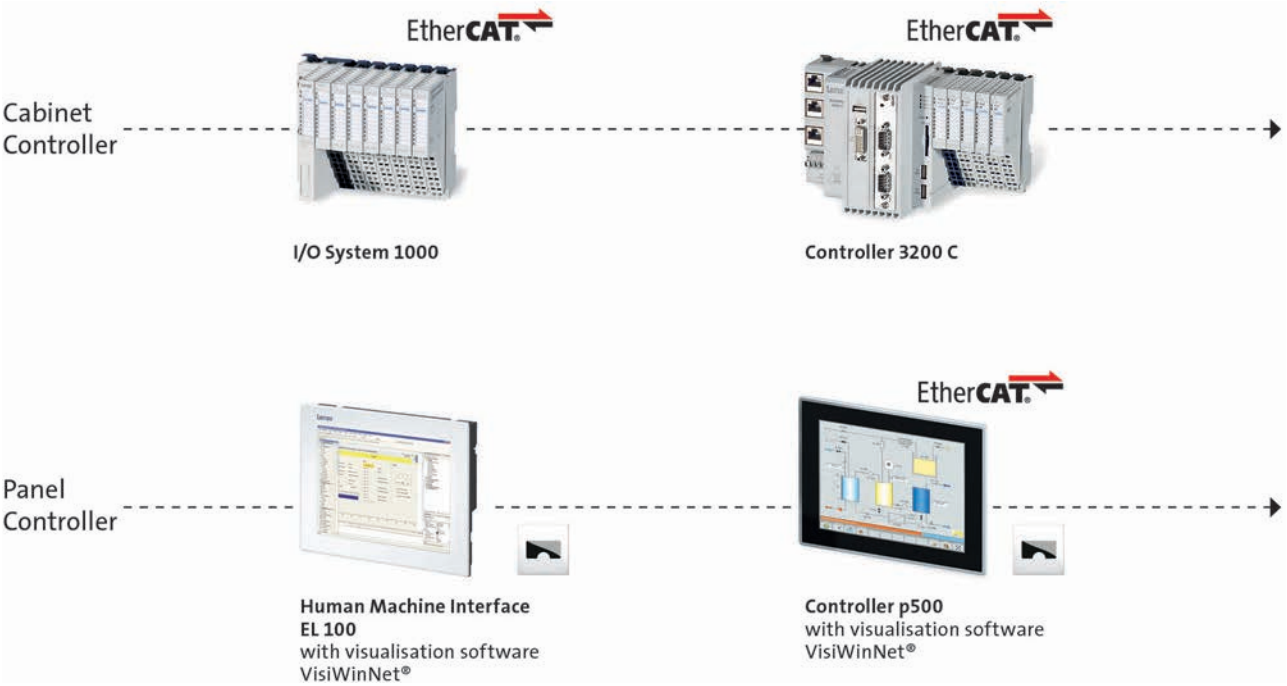

Engineering Tools

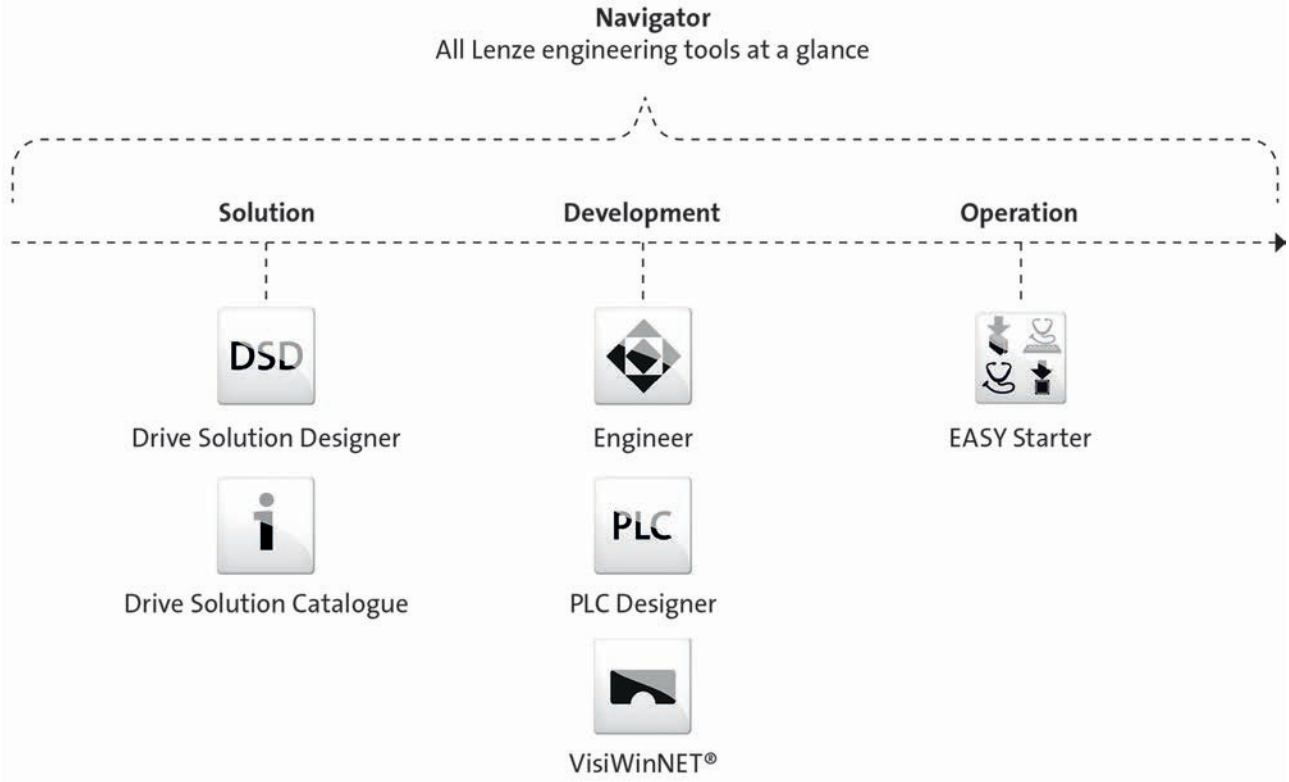

L-force product portfolio

Inverters

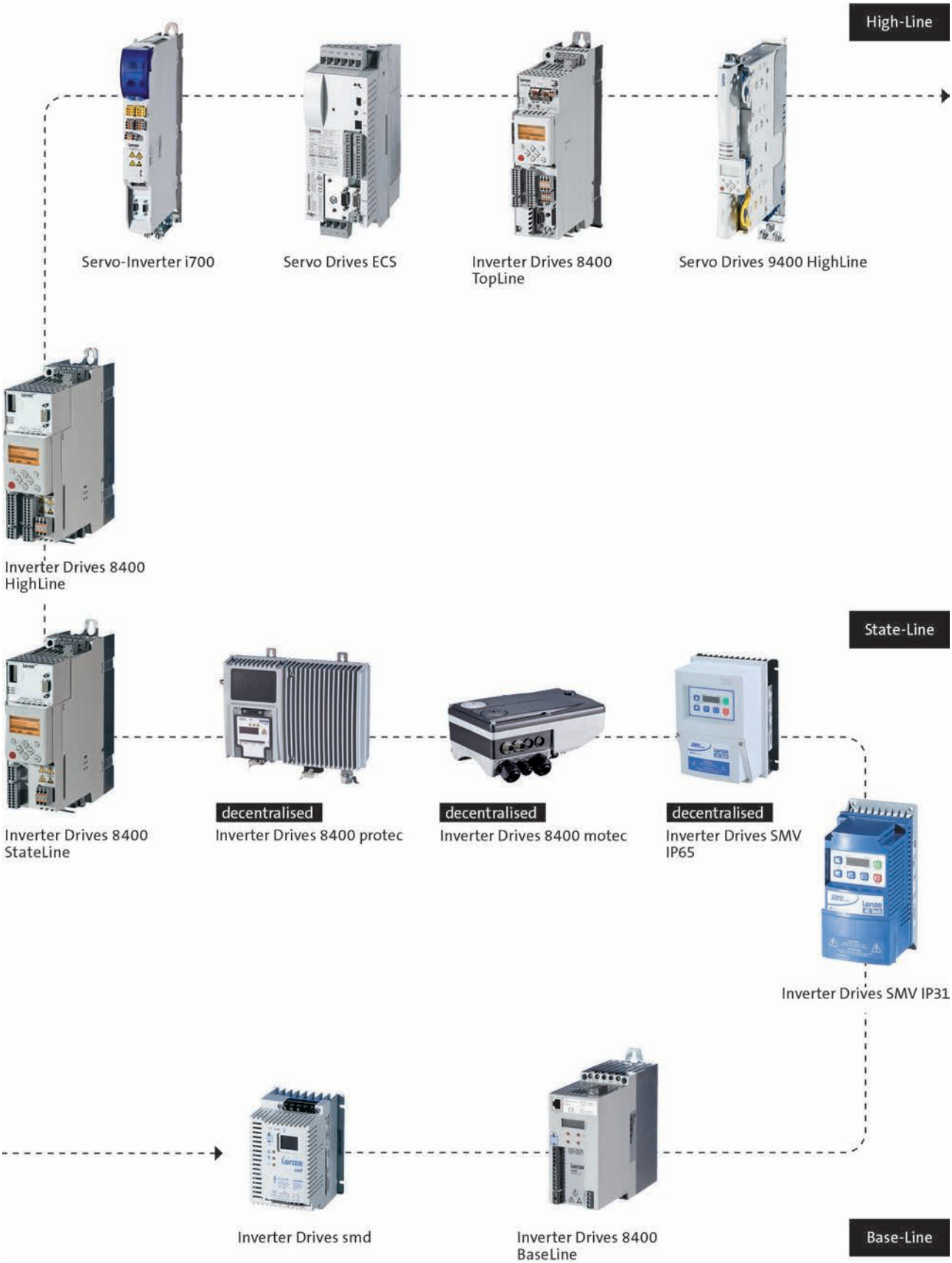

L-force product portfolio

Motors

High-Line

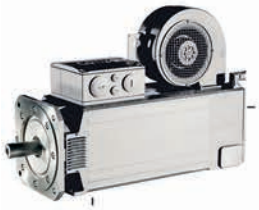

MQA asynchronous servo motors



SDSGS synchronous servo motors



MDXKS synchronous servo motors



Synchronous servo motors MCS



Asynchronous servo motors MCA



Asynchronous servo motors SDSGA

State-Line



MF three-phase AC motors



MH three-phase AC motors



MD three-phase AC motors



Basic MD/MH three-phase AC motors

Base-Line

L-force product portfolio

Gearboxes

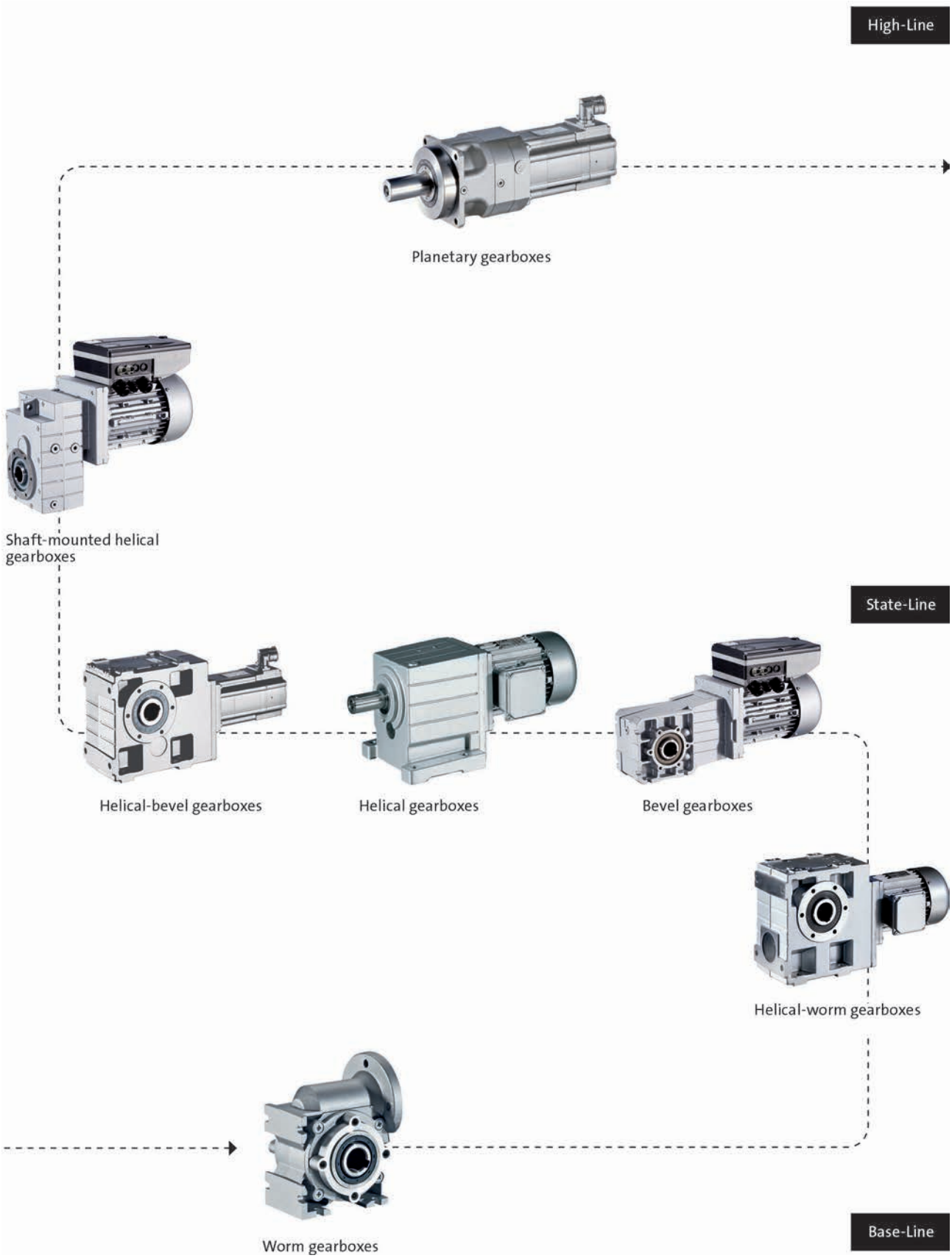

GKR bevel gearboxes

MD/MH three-phase AC motors
0.06 ... 0.55 kW
0.75 ... 7.5 kW (IE2)

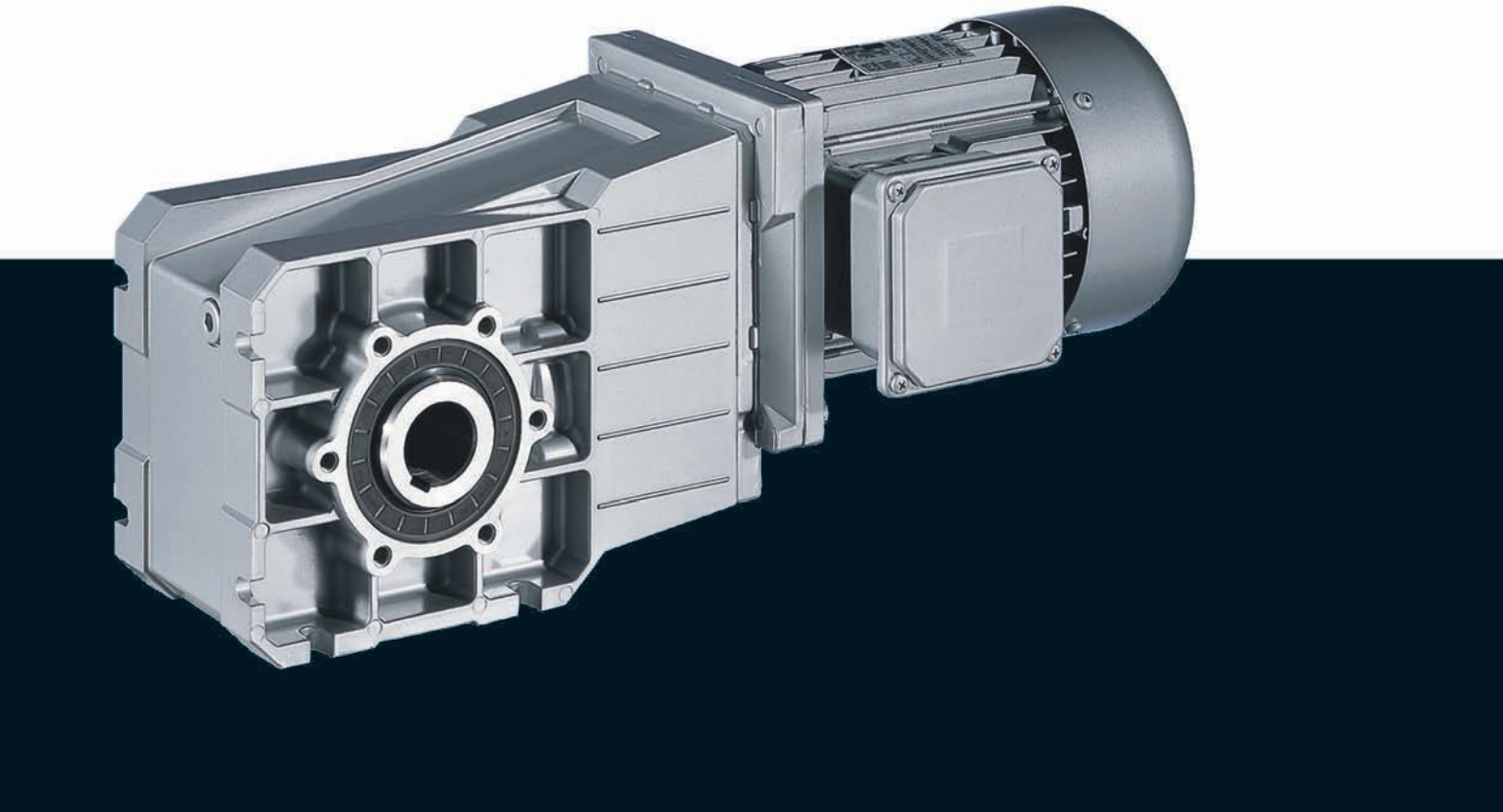

GKR bevel gearboxes

Contents

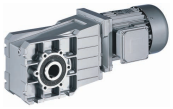

General information	List of abbreviations	6.8 - 4
	Product key	6.8 - 5
	Product information	6.8 - 7
	Functions and features	6.8 - 8
	Dimensioning	6.8 - 13
	Notes on ordering	6.8 - 19
	Ordering details checklist	6.8 - 20
Technical data	Permissible radial and axial forces at output	6.8 - 25
	Output backlash in angular minutes	6.8 - 28
	Moments of inertia	6.8 - 29
	Weights	6.8 - 30
	Selection tables	6.8 - 33
	Dimensions	6.8 - 60
Accessories	Hollow shaft with shrink disc	6.8 - 77
	Mounting set for hollow shaft circlip: Proposed design for auxiliary tools	6.8 - 78
	Hoseproof hollow shaft cover	6.8 - 79
	Gearboxes with 2nd output shaft end	6.8 - 79
	Rubber buffer for torque plate	6.8 - 80
	Torque plate on threaded pitch circle	6.8 - 81
	Torque plate at housing foot	6.8 - 83
	Ventilations	6.8 - 84

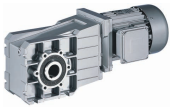

List of abbreviations

$\eta_{c=1}$		Efficiency
c		Load capacity
f_N	[Hz]	Rated frequency
$F_{ax,max}$	[N]	Max. axial force
$F_{rad,max}$	[N]	Max. radial force
H_{max}	[m]	Site altitude
i		Ratio
J	[kgcm²]	Moment of inertia
m	[kg]	Mass
M_2	[Nm]	Output torque
n_2	[r/min]	Output speed
n_N	[r/min]	Rated speed
P_N	[kW]	Rated power
$S_{hü}$	[1/h]	Transition operating frequency
$T_{opr,max}$	[°C]	Max. ambient operating temperature
$T_{opr,min}$	[°C]	Min. ambient operating temperature
$U_{N,\Delta}$	[V]	Rated voltage
$U_{N,Y}$	[V]	Rated voltage

CE	Communauté Européenne
CSA	Canadian Standards Association
DIN	Deutsches Institut für Normung e.V.
EMC	Electromagnetic compatibility
EN	European standard
IEC	International Electrotechnical Commission
IM	International Mounting Code
IP	International Protection Code
NEMA	National Electrical Manufacturers Association
UL	Underwriters Laboratory Listed Product
UR	Underwriters Laboratory Recognized Product
VDE	Verband deutscher Elektrotechniker (Association of German Electrical Engineers)
CCC	China Compulsory Certificate
GOST	Certificate for Russian Federation
cURus	Combined certification marks of UL for the USA and Canada
UkrSEPRO	Certificate for Ukraine

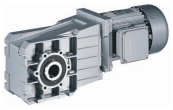

Product key

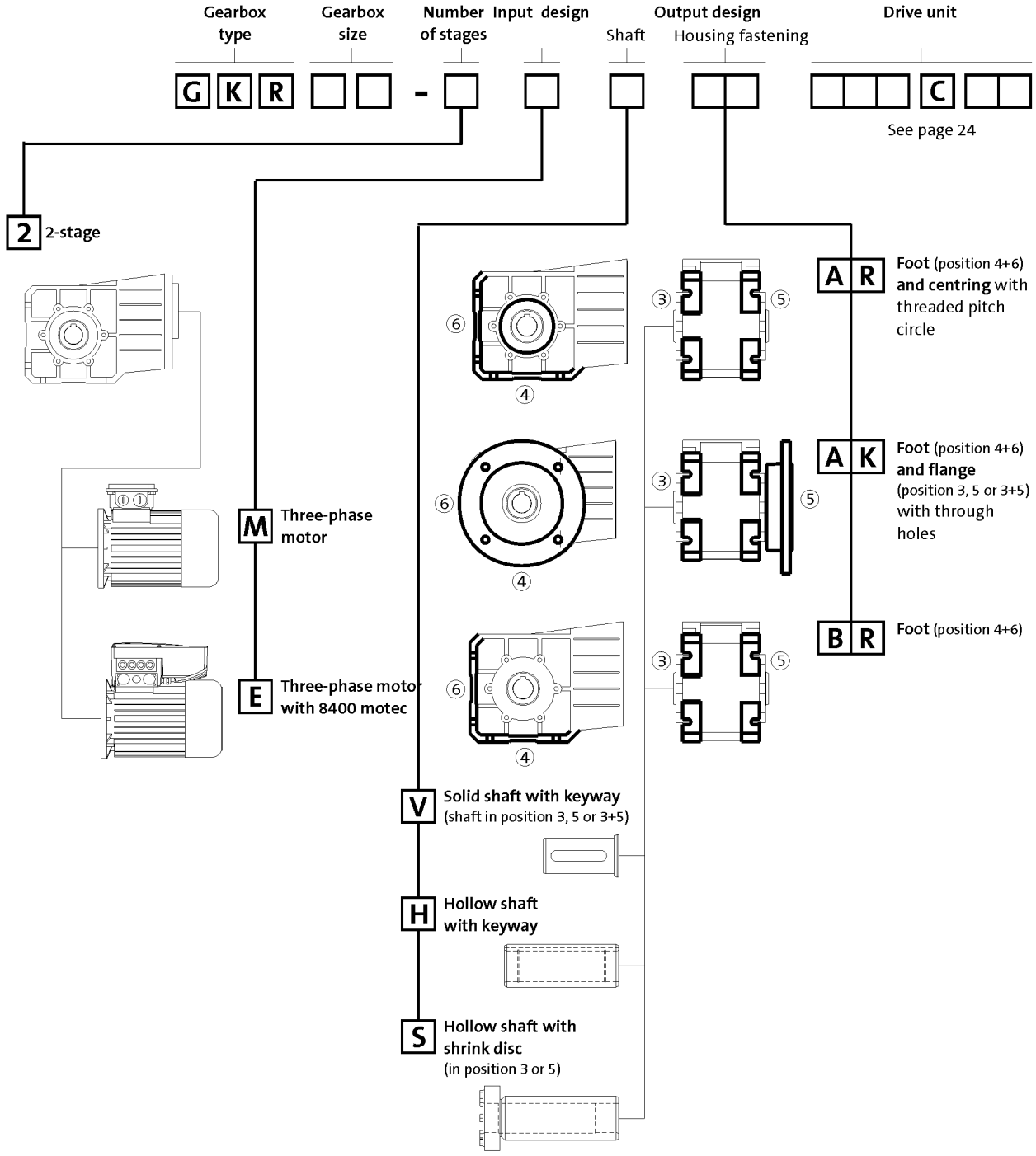

	Output design			
	V	H	S	K
	d x l [mm]	d [mm]	d [mm]	Øa2 [mm]
GKR03-2	20x40	18/20	20	110/120
GKR04-2	20x40	20/25	20	120/160
GKR05-2	30x60	30/35	30/35	160/200
GKR06-2	35x70	40/45	40	200/250

Product key

Mounting position (A...F) and position of system blocks (1...6)

A	B	C
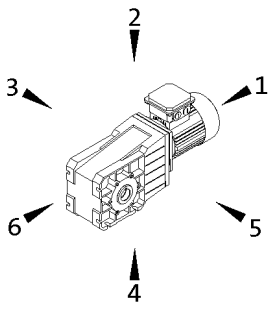	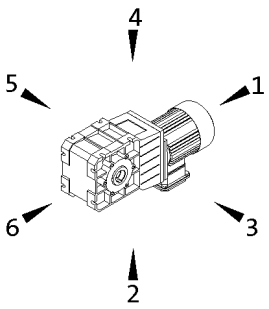	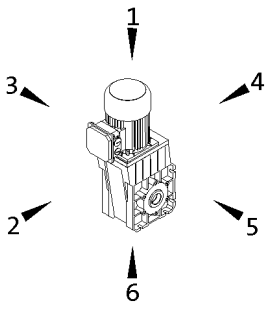
D	**E**	**F**
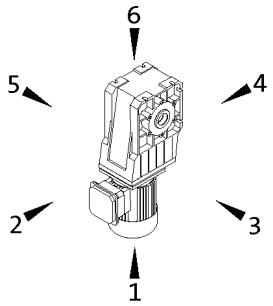	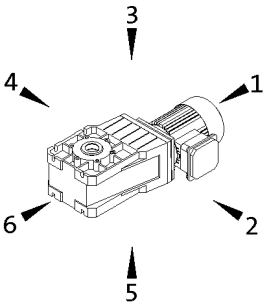	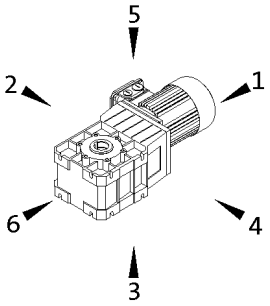

Hollow shaft: 0
Solid shaft: 3, 5, 8 (3+5)
Hollow shaft with shrink disc: 3, 5

Without flange: 0
Flange: 3, 5, 8 (3+5)
Terminal box / motec: 2, 3, 4, 5

Gearbox designs

Basic versions	
Motor efficiency	Standard efficiency Increased efficiency (IE2)
Surface and corrosion protection	No OKS (unpainted, aluminium housing) OKS-S (paint: RAL 7012)
Lubricant	CLP 460 (mineral)
Ventilation	Breather elements for GKR06

Options	
Surface and corrosion protection	OKS-G (primer: grey) OKS-S (special paint according to RAL) OKS-M (special paint according to RAL) OKS-L (special paint according to RAL)
Lubricant	CLP HC 320 (synthetic) CLP HC 220 USDA H1 (synthetic)
Shaft sealing rings	Driven shaft: Viton
Accessories	Rubber buffer for torque plate (GKR 03/04 only) Torque plate on threaded pitch circle Housing foot torque plate (GKR05/06 only) 2nd output shaft end Shrink disc cover Hoseproof hollow shaft cover Mounting set for hollow shaft circlip
Nameplate	Metal nameplate (supplied loose) Adhesive nameplate (supplied loose)

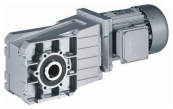

Product information

Lenze provides a geared motor construction kit, which covers a wide range of requirements. Numerous drive-side and output-side options enable precise adaptation of the drive to the specific application. This is the basis for versatile applications and functional scalability of our gearboxes and geared motors.
The modular concept and high power density make extremely compact sizes possible. Optimised teeth profiles and ground gears ensure low-noise operation and low backlash. The gearboxes are of compact and hence space-saving construction.

For maximum efficiency

Our bevel gearboxes are a showpiece for lightweight engineering. They are also highly efficient and are equipped with wear free teeth. Together with three-phase AC motors and servo motors, they form and efficient and compact drive unit. They are available as a 2-stage version with a torque of up to 450 Nm and a ratio of up to i=76.

Inverters for motor-proximity installation

The Drive Package with decentralised Inverter Drives 8400 motec covers a power range up to 7.5 kW.

Designs

- 2-stage gearboxes
- Hollow shaft with keyway or shrink discSolid shaft with keyway
- Solid shaft with keyway
- Foot or flange mounting
- Torque plate, including rubber buffer
- With three-phase AC motors MD, power range 0.06 ... 0.55 kW
- With three-phase AC motors MH (efficiency class IE2) , power range 0.75 ... 7.5 kW

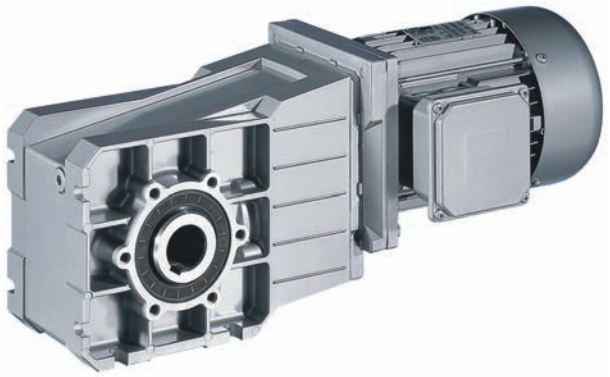

Bevel geared motor GKR05-2M HBR 090-32

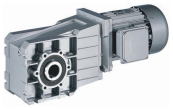

Functions and features

Gearbox type	GKR
Housing	
Design	Cuboid
Material	Aluminium / cast iron
Solid shaft	
Design	with keyway to DIN 6885
Tolerance	m6 (d > 50 mm) k6 (d ≤ 50 mm)
Material	Tempered steel C45 or 42CrMo4
Hollow shaft	
Design	H: with keyway S: smooth
Tolerance	Bore H7
Material	Tempered steel C45
Toothed parts	
Design	Optimised tooth flanks and profile geometry Ground tooth flanks
Material	Case-hardened steel
Shaft-hub joint	
	1st stage/prestage/helical (bevel) gearbox: Friction-type connection Output stage (= 2nd, 3rd or 4th stage): Friction-type or positive-fit connection
Shaft sealing rings	
Design	With dust lip
Material	NB / FP
Bearing	
Design	Ball bearing / tapered-roller bearing depending on size and design
Lubricants	
Standard	DIN 51502
Quantities	corresponding to mounting position (see operating instructions)
Mechanical efficiency	
1-stage gearboxes [$\eta_{c=1}$]	
2-stage gearboxes [$\eta_{c=1}$]	0.96
3-stage gearboxes [$\eta_{c=1}$]	
4-stage gearboxes [$\eta_{c=1}$]	
Notes	

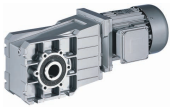

Functions and features

Lubricants

Lenze gearboxes and geared motors are ready for operation on delivery and are filled with lubricants specific to both the drive and the design. The mounting position and design specified in the order are key factors in choosing the volume of lubricant.

The lubricants listed in the lubricant table are approved for use in Lenze drives.

Lubricant table

Mode	CLP 460	CLP HC 320	CLP HC 220 USDA H1
Ambient temperature [°C]	0 ... +40	-25 ... +50	-20 ... +40
Specification	Mineral based oil with additives	Synthetic-based oil (synthetic hydrocarbon / poly-alpha-olefin oil)	
Note			For food processing industry
Changing interval	16000 operating hours not later than after three years (oil temperature 70...80 °C)	25000 operating hours not later than after three years (oil temperature 70...80 °C)	16000 operating hours not later than after three years (oil temperature 70...80 °C)
Fuchs	Fuchs Renolin CLP 460	Fuchs Renolin Unisyn CLP 320	bremer & leguil Cassida Fluid GL 220
Klüber	Klüberoil GEM1-460 N	Klübersynth GEM4-320 N	Klüberoil 4 UH1-220 N
Shell	Shell Omala 460	Shell Omala Oil HD 320	

► Please contact your Lenze office if you are operating at ambient temperatures in areas up to < -20 °C > or up to +40°C.

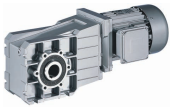

Functions and features

Surface and corrosion protection

For optimum protection of geared motors against ambient conditions, the surface and corrosion protection system (OKS) offers tailor-made solutions.

Various surface coatings combined with other protective measures ensure that the geared motors operate reliably even at high air humidity, in outdoor installations or in the presence of atmospheric impurities. Any colour from the RAL Classic collection can be chosen for the top coat. The geared motors are also available unpainted (no surface and corrosion protection).

Surface and corrosion protection system	Applications	Measures
	Catalogue text	Catalogue text
OKS-G (primed)	• Dependent on subsequent top coat applied	• 1K priming coat (grey) • Zinc-coated screws • Rust-free breather elements Optional measures • Stainless steel nameplate
OKS-S (small)	• Standard applications • Internal installation in heated buildings • Air humidity up to 90%	• Surface coating as per corrosivity category C1 (in line with EN 12944-2) • Zinc-coated screws • Rust-free breather elements Optional measures • Stainless steel nameplate
OKS-M (medium)	• Internal installation in non-heated buildings • Covered, protected external installation • Air humidity up to 95%	• Surface coating as per corrosivity category C2 (in line with EN 12944-2) • Zinc-coated screws • Rust-free breather elements Optional measures • Stainless steel shaft • Stainless steel nameplate • Rust-free shrink disc (on request)
OKS-L (high)	• External installation • Air humidity above 95% • Chemical industry plants • Food industry	• Surface coating as per corrosivity category C3 (in line with EN 12944-2) • Blower cover and B end shield additionally primed • Cable glands with gaskets • Corrosion-resistant brake with cover ring, stainless friction plate, and chrome-plated armature plate (on request) • All screws/screw plugs zinc-coated • Stainless breather elements • Threaded holes that are not used are closed by means of plastic plugs Optional measures • Sealed recesses on motor (on request) • Stainless steel shaft • Stainless steel nameplate • Rust-free shrink disc (on request) • Additional priming coat on cast iron fan • Oil expansion tank and torque plates painted separately and supplied loose

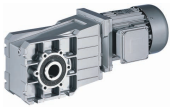

Functions and features

Structure of surface coating

Surface and corrosion protection system	Corrosivity category	Surface coating	Colour
	DIN EN ISO 12944-2	Structure	
Without OKS (uncoated)		Dipping primed gearbox	
OKS-G (primed)		Dipping primed gearbox 1K priming coat	
OKS-S (small)	C1	Dipping primed gearbox 2K-PUR top coat	Standard: RAL 7012 Optional: RAL Classic
OKS-M (medium)	C2	Dipping primed gearbox 1K priming coat 2K-PUR top coat	Standard: RAL 7012 Optional: RAL Classic
OKS-L (high)	C3	Dipping primed gearbox 2K-EP priming coat 2K-PUR top coat	Standard: RAL 7012 Optional: RAL Classic

► The gearboxes GKR 03 ... 06 have an aluminium housing, therefore a dipping primer is dispensed with in the case of these gearboxes.

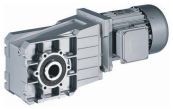

Functions and features

Ventilation

Gearboxes without ventilation
No ventilation is required for gearboxes GKR03 ... 05.

Gearboxes with ventilation
Gearbox GKR06 is supplied with a breather element as standard.

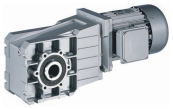

Dimensioning

General information about the data provided in this catalogue

Powers, torques and speeds
The powers, torques and speeds specified in this catalogue are rounded values and are valid under the following conditions:
- Operating time/day = 8 h (100% OT)
- Duty class I for up to 10 switching operations/h
- Mounting positions and designs in this catalogue
- Standard lubricant
- T_{amb} = 20 °C for gearboxes,
  T_{amb} = 40 °C for motors (in accordance with EN 60034)
- Site altitude < = 1000 m amsl
- The selection tables provide the permissible mechanical powers and torques. For notes on the thermal power limit, see chapter drive dimensioning.
- The rated power specified for motors and geared motors applies to operating mode S1 (in accordance with EN 60034).

Under different operating conditions, the values obtained may vary from those listed here.
In the case of extreme operating conditions, please consult your Lenze sales office.

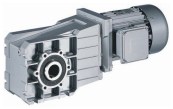

Dimensioning

Thermal power limit

The thermal power limit, defined by the heat balance, limits the permissible gearbox continuous power. It may be less than the mechanical power ratings listed in the selection tables.

The thermal power limit is affected by:
- the churning losses in the lubricant. These are determined by the mounting position and the circumferential speed of the wheels
- the load and the speed
- the ambient conditions: temperature, air circulation, input or dissipation via shafts and the foundation

Please consult your Lenze subsidiary
- if the following input speeds n_1 are exceeded on a continuous basis (continuous is defined as more than 8 h/day):

Motor frame size	Mounting position A, B, E, F	Mounting position C, D
063 ... 100	3000 r/min	3000 r/min
112 ... 132	3000 r/min	1500 r/min
160 ... 225	2000 r/min	1500 r/min

- if the following input speeds n_1 are exceeded:

Motor frame size	Mounting position A, B, E, F	Mounting position C, D
063 ... 100	4000 r/min	3000 r/min
112 ... 132	4000 r/min	2000 r/min
160 ... 225	3000 r/min	1500 r/min

Possible ways of extending the application area

- synthetic lubricant (option)
- shaft sealing rings made from FP material/Viton (option)
- reduction in lubricant quantity
- cooling of the geared motor by means of air convection on the machine/system

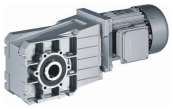

Dimensioning

Load capacity and application factor

Load capacity c of gearbox
Rated value for the load capacity of Lenze geared motors.
- c is the ratio of the permissible rated torque of the gearbox to the rated torque supplied by the drive component (e.g. the built-in Lenze motor).
- The value of c must always be greater than the value of the application factor k calculated for the application.

Application factor k (according to DIN 3990)
Takes into account the influence of temporally variable loads which are actually present during the anticipated operating time of gearboxes and geared motors.
k is determined by:
- the type of load
- the load intensity
- temporal influences

Duty class	Load type
I	Smooth operation, small or light jolts
II	Uneven operation, average jolts
III	Uneven operation, severe jolts and/or alternating load

Application factor k

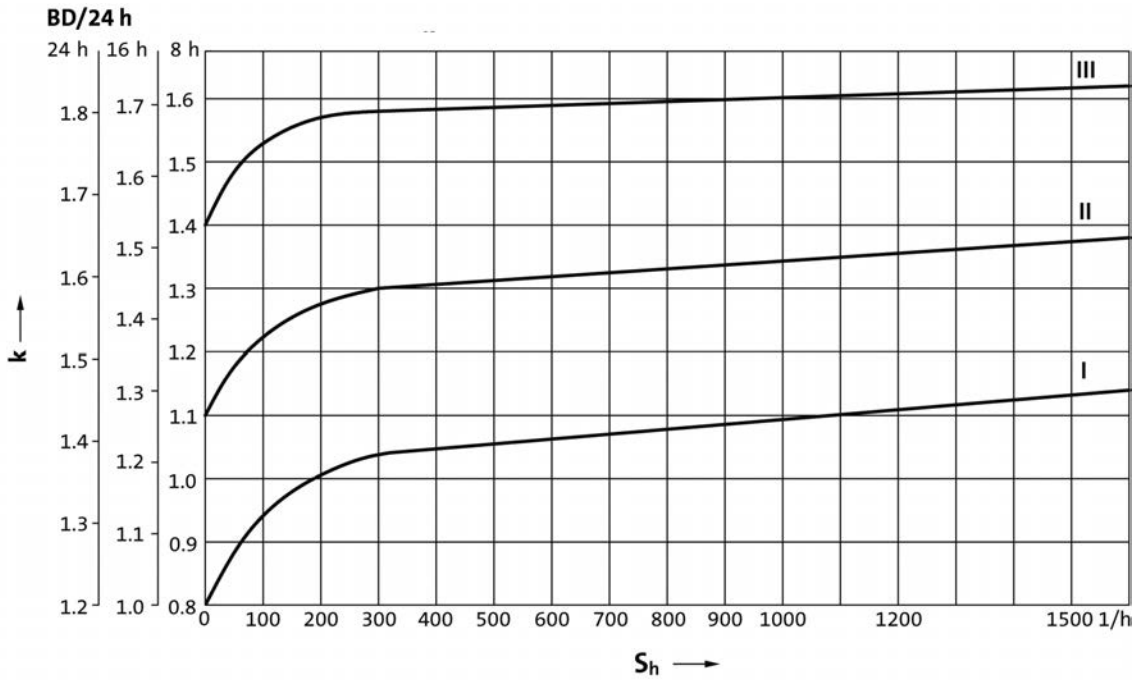

Dimensioning

Torque derating at low motor frequencies

Motor size-dependent torque reduction, taking into account the thermal response during operation on the inverter.

Torque characteristics

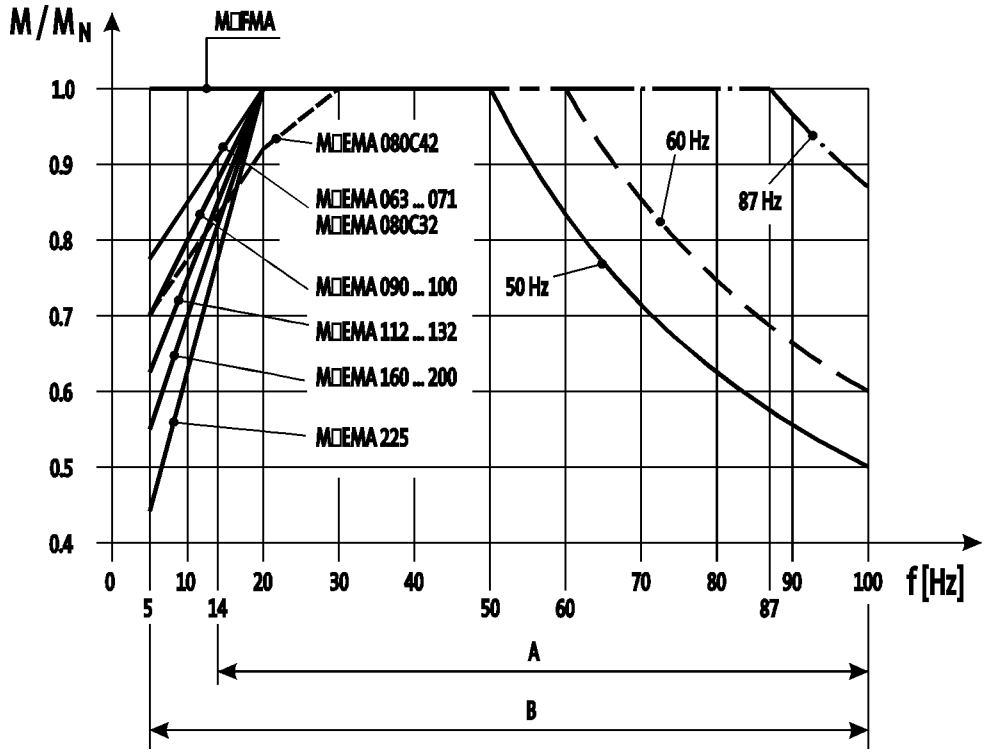

A = Operation with integral fan and brake
B = Operation with integral fan and brake control "Holding current reduction"

You can use the Drive Solution Designer for precise drive dimensioning.

The Drive Solution Designer helps you to carry out a fast and high-quality drive dimensioning.
The software includes well-founded and proven knowledge on drive applications and electro-mechanical drive components.

Please contact your Lenze sales office.

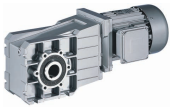

Dimensioning

Notes on the selection tables

The selection tables show the available combinations of gearbox type, number of stages, ratio and motor. The following legend indicates the structure of the selection tables.

Gearbox type

GST helical gearbox



Technical data

Selection tables

Rated speed n_N of the drive motor

Product key of geared motor

Rated power P_N of the drive motor in relation to the rated frequency

► 50 Hz, 60 Hz: P_N = 0.75 kW

n_N	1410 r/min			1720 r/min			i		
f_N	50 Hz			60 Hz					
	n_2 [r/min]	M_2 [Nm]	c	n_2 [r/min]	M_2 [Nm]	c			
	881	8.0	2.4	1069	6.6	2.8	1.600	GST04-1M □□□080C32	76
	689	10	2.2	835	8.4	2.6	2.048	GST04-1M □□□080C32	76

Output speed n_2

Output torque M_2 (constant for all listed frequencies)

The load capacity c of the gearbox c is the ratio of the gearbox's rated torque to the rated torque of the three-phase motor (calculated in respect of its application to the output shaft). c must always be greater than the application factor k determined for the application

Ratio i

Page number for dimensions

$$c = \frac{M_{2,zul}}{M_{1N} \cdot i \cdot \eta_{Getr}} > k$$

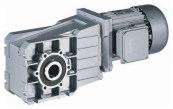

Dimensioning

Notes on the selection tables

Motor voltages

The power values and torques indicated in the selection tables relate to the following motor voltages:
- 50 Hz : Δ 230 V / Y 400 V
- 60 Hz : Δ 265 V / Y 460 V
- 87 Hz : Δ 400 V

Operation at 87 Hz

In 87 Hz operation, the three-phase AC motor (which is designed for a voltage of Δ 230 V / Y 400 V at 50 Hz) is operated on an inverter with 400 V rated voltage in a delta connection. It is important to note here that the inverter must be configured for 87Hz output.
This offers the following advantages over 50 Hz operation:
- the setting range of the motor is increased by a factor of 1.73.
- the motor can then provide around 1.73 times greater output, which in turn allows a smaller and more affordable motor to be selected for the application.
- the efficiency of the motor is also improved.

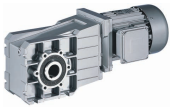

Notes on ordering

We want to be sure that you receive the correct products in good time.

To allow us to achieve this we need:
- your address and your company data
- our product key for the individual products in this catalogue
- your delivery date and delivery address

Ordering procedure
Please use the ordering information checklist to ensure that you provide all the ordering information required for the various products.

The ordering information checklist, the product key, the basic versions, options, mounting position and position of the system blocks will be found in the General – Product key section.

A list of Lenze's worldwide sales offices can be found on the Internet: www.Lenze.com.

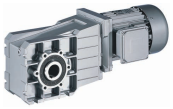

Ordering details checklist

☐ **Offer**

Page __ of __

☐ **Order**

Customer No.

Job No.

Fax No. _____

Sender

Company

Made out by (name)

Street/P.O. Box

Department

P.O. Box, City

Telephone No.

Date Signature

Delivery address (if different)

Street/P.O. Box

Desired delivery date

P.O. Box, City

Dispatching notes

Invoice recipient (if different)

Street/P.O. Box

Postal code, City

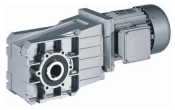

Ordering details checklist

Customer No.

Job No.

Page __

Quantity

Efficiency class ☐ Standard efficiency ☐ High efficiency (IE2)

Rated frequency ☐ 50 Hz ☐ 60 Hz ☐ 87 Hz

Ratio i

GKR ☐☐ – 2 ☐ M ☐ E ☐ V ☐ H ☐ S ☐ A ☐ B ☐ R ☐ K

Motor frame size ☐☐☐C☐☐

Hollow shaft d = ☐ mm

Flange a_2 = ☐ mm

Mounting position A B C D E F

Position of system blocks

Shaft/shrink disc: 0 3 4 8

Flange: 0 3 5 8

Terminal box: 2 3 4 5

Surface and corrosion protection ☐ Without OKS (unpainted)

Options

Special lubricants ☐ CLP HC 320 (synthetic) ☐ CLP HC 220 USDA H1 (for the food industry)

Surface and corrosion protection ☐ OKS-S small) ☐ OKS-M (medium) ☐ OKS-L (high) ☐ OKS-G (primed) ☐

Accessories

- ☐ Rubber buffer for torque support (only GKR03/04)
- ☐ Torque support for housing foot (only GKR05/06)
- ☐ Torque support for threaded pitch circle
- ☐ 2nd output shaft end
- ☐ Mounting set for hollow-shaft circlip
- ☐ Shrink disc cover
- ☐ Hollow shaft cover, hoseproof

Shaft sealing rings ☐ Viton

6.8

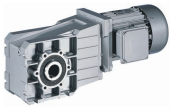

Ordering details checklist

Three-phase AC motors options

Customer No. ☐☐☐☐☐☐☐☐

Job No. ☐☐☐☐☐☐☐☐☐☐

Page __

Motor connection

Terminal box
- ☐ with plug-in connector ICN 6-pin. Adhere to permissible rated motor current 20 A!
- ☐ with plug-in connector ICN 8-pin. Adhere to permissible rated motor current 20 A!
- ☐ with plug-in connector HAN10E. Adhere to permissible rated current 16 A!
- ☐ with plug-in connector HAN-Modular. Adhere to permissible rated current 16 / 40 A!

Cable entry: only with M□□MAXX/LL063 ... 132 or terminal box with plug-in connector in position 1 ☐ 2 ☐ 3 ☐ 4 ☐ 5 ☐

Blower

☐ 1~ ☐ 3~

☐ Terminal box with plug-in connector ICN

Terminal box position 2 ☐ 3 ☐ 4 ☐ 5 ☐

Spring-applied brake

Brake version: ☐ Standard ☐ Longlife

Brake size ☐

Characteristic torque ☐ Nm

Rated voltage AC ☐ DC ☐ ☐ V

Rectifier: Only in the case of AC supply voltage

- ☐ Half-wave rectifier
- ☐ Bridge rectifier
- ☐ Bridge/half-wave rectifier (overexcitation)
- ☐ Bridge/half-wave rectifier (holding current reduction)

Brake options: Manual release lever in position 2 ☐ 3 ☐ 4 ☐ 5 ☐

☐ Low-noise version (Standard in the case of brake with speed/position encoder)

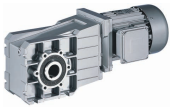

Ordering details checklist

Three-phase AC motors options

Customer No. ☐☐☐☐☐☐☐☐

Job No. ☐☐☐☐☐☐☐☐☐☐

Page __

Speed/position encoder

Resolver ☐ RS1

Incremental encoder HTL ☐ IG128-24V-H ☐ IG512-24V-H ☐ IG1024-24V-H ☐ IG2048-24V-H

Incremental encoder TTL ☐ IG512-5V-T ☐ IG1024-5V-T ☐ IG2048-5V-T

Feedback with ICN connector ☐ IG128-24V-H not possible with plug-in connector!

Motor protection ☐ PTC ☐ KTY 83-110 ☐ KTY 84-130

Approval ☐ UL/CSA approval: cURus ☐ CCC ☐ China Energy Label

Further options

Indication of supply voltage only for motor frame sizes 112C32 to 225C22

☐ Δ; 400V-50Hz; 460V-60Hz ☐ Y/Δ; 400/230V-50Hz; 460/265V-60Hz (-/400V-87Hz possible in operation with frequency inverter)

☐ Protection cover

☐ 2nd shaft end

☐ Handwheel

☐ Increased centrifugal mass

☐ 2nd nameplate (adhesive nameplate/metal nameplate)

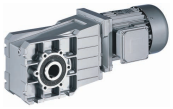

Permissible radial and axial forces at output

Permissible radial force
$F_{rad,per} = \min(f_w \times f_\alpha \times F_{rad,max}$; $f_w \times F_{rad,max}$ at $n_2 \leq 16$ r/min)

Permissible axial force
$F_{ax,per} = F_{ax,max}$ if $F_{rad} = 0$

If F_{rad} **and** $F_{ax} \neq 0$; please contact Lenze.

Application of forces

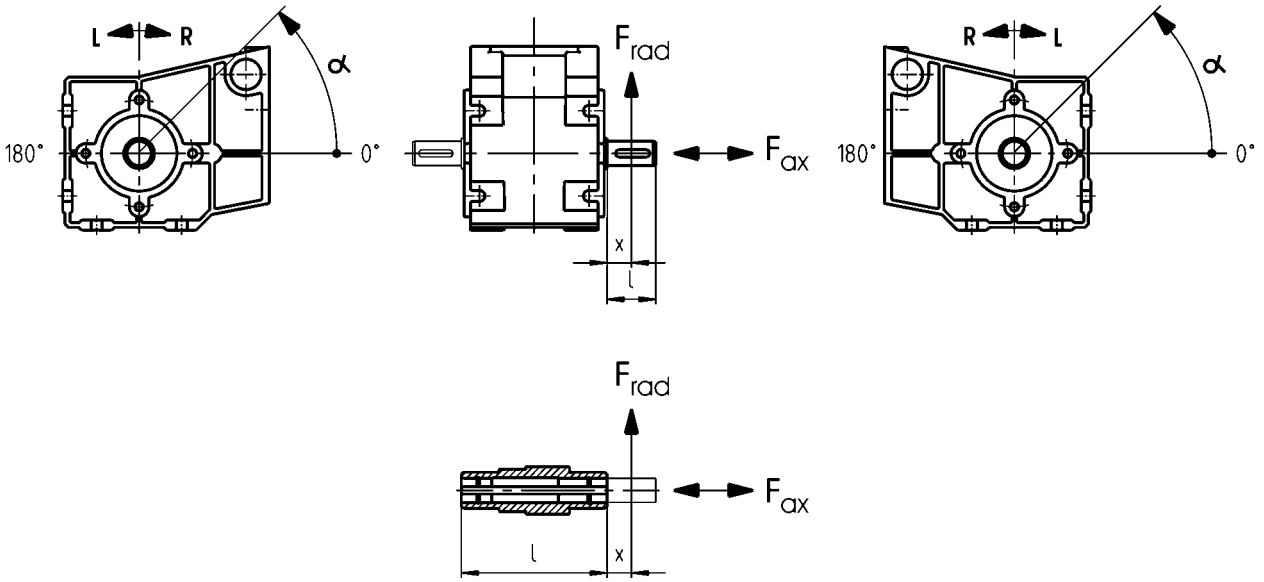

Effective direction factor f_α at output shaft

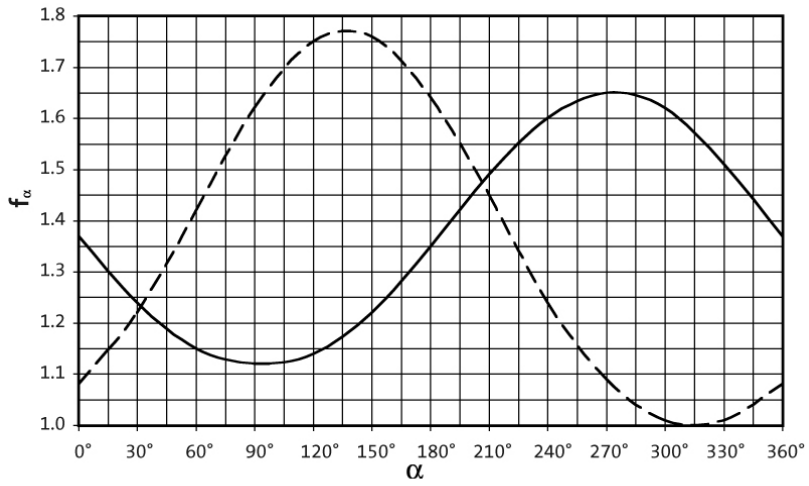

——— Direction of rotation L
— — — Direction of rotation R

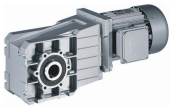

Permissible radial and axial forces at output

Additional load factor f_w at output shaft

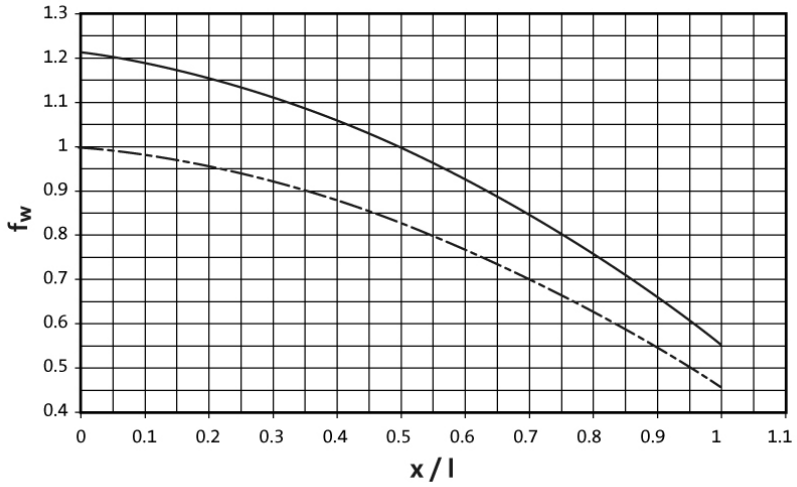

——— Solid shaft (V□□) — · — Hollow shaft (H□□)

GKR□□-2□ H□□

Size	n_2 [r/min]									
Gearbox	1000	630	400	250	160	100	63	40	25	≤16

	Max. radial force, Hollow shaft									
	$F_{rad,max}$	$F_{rad,max}$	$F_{rad,max}$	$F_{rad,max}$	$F_{rad,max}$	$F_{rad,max}$	$F_{rad,max}$	$F_{rad,max}$	$F_{rad,max}$	$F_{rad,max}$
	[N]	[N]	[N]	[N]	[N]	[N]	[N]	[N]	[N]	[N]
GKR03	900	1200	2200	2500	2800	3000	3000	3000	3000	3000
GKR04	1000	2200	2550	3000	3300	3600	3600	3600	3600	3600
GKR05	1500	2250	3800	4500	5100	6200	7400	7800	7800	7800
GKR06	3000	3800	5000	5200	5500	7000	9000	10000	10000	10000

	Max. axial force, Hollow shaft									
	$F_{ax,max}$	$F_{ax,max}$	$F_{ax,max}$	$F_{ax,max}$	$F_{ax,max}$	$F_{ax,max}$	$F_{ax,max}$	$F_{ax,max}$	$F_{ax,max}$	$F_{ax,max}$
	[N]	[N]	[N]	[N]	[N]	[N]	[N]	[N]	[N]	[N]
GKR03	600	800	1000	1100	1250	1400	1400	1400	1400	1400
GKR04	700	1000	1275	1500	1650	1800	1800	1800	1800	1800
GKR05	1100	1500	1900	2200	2500	3100	3700	3900	3900	3900
GKR06	1500	2000	2500	2600	2750	3500	4500	5000	5000	5000

- Application of force F_{rad}: at hollow shaft end face (x = 0)
- $F_{ax,max}$ only valid with F_{rad} = 0
- Neither radial nor axial forces are permissible for the hollow shaft with shrink disc (S□□).

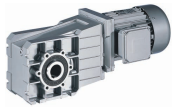

Permissible radial and axial forces at output

GKR□□-2□ V□R

Size	n_2 [r/min]									
Gearbox	1000	630	400	250	160	100	63	40	25	≤16

	Max. radial force, Solid shaft without flange									
	$F_{rad,max}$	$F_{rad,max}$	$F_{rad,max}$	$F_{rad,max}$	$F_{rad,max}$	$F_{rad,max}$	$F_{rad,max}$	$F_{rad,max}$	$F_{rad,max}$	$F_{rad,max}$
	[N]	[N]	[N]	[N]	[N]	[N]	[N]	[N]	[N]	[N]
GKR03	900	1200	1800	2100	2400	2800	3000	3000	3000	3000
GKR04	1000	1800	2100	2500	2700	3000	3000	3000	3000	3000
GKR05	1500	2350	3000	3600	4500	5000	6000	6500	6500	6500
GKR06	2000	2800	4000	4200	4500	5600	7300	8600	9000	9000

	Max. axial force, Solid shaft without flange									
	$F_{ax,max}$	$F_{ax,max}$	$F_{ax,max}$	$F_{ax,max}$	$F_{ax,max}$	$F_{ax,max}$	$F_{ax,max}$	$F_{ax,max}$	$F_{ax,max}$	$F_{ax,max}$
	[N]	[N]	[N]	[N]	[N]	[N]	[N]	[N]	[N]	[N]
GKR03	600	800	1000	1100	1250	1400	1400	1400	1400	1400
GKR04	700	1000	1275	1500	1650	1800	1800	1800	1800	1800
GKR05	1100	1520	1900	2200	2500	3100	3700	3900	3900	3900
GKR06	1500	2000	2500	2600	2750	3500	4500	5000	5000	5000

GKR□□-2□ V□K

Size	n_2 [r/min]									
Gearbox	1000	630	400	250	160	100	63	40	25	≤16

	Max. radial force, Solid shaft with flange									
	$F_{rad,max}$	$F_{rad,max}$	$F_{rad,max}$	$F_{rad,max}$	$F_{rad,max}$	$F_{rad,max}$	$F_{rad,max}$	$F_{rad,max}$	$F_{rad,max}$	$F_{rad,max}$
	[N]	[N]	[N]	[N]	[N]	[N]	[N]	[N]	[N]	[N]
GKR03	900	1200	1800	2100	2400	2800	3000	3000	3000	3000
GKR04	1000	1800	2100	2500	2700	3000	3000	3000	3000	3000
GKR05	2400	3600	5200	6000	6500	6500	6500	6500	6500	6500
GKR06	3000	4000	5500	6200	7000	9000	9000	9000	9000	9000

	Max. axial force, Solid shaft with flange									
	$F_{ax,max}$	$F_{ax,max}$	$F_{ax,max}$	$F_{ax,max}$	$F_{ax,max}$	$F_{ax,max}$	$F_{ax,max}$	$F_{ax,max}$	$F_{ax,max}$	$F_{ax,max}$
	[N]	[N]	[N]	[N]	[N]	[N]	[N]	[N]	[N]	[N]
GKR03	600	800	1000	1100	1250	1400	1400	1400	1400	1400
GKR04	700	1000	1275	1500	1650	1800	1800	1800	1800	1800
GKR05	1100	1500	1900	2200	2500	3100	3700	3900	3900	3900
GKR06	1500	2000	2500	2600	2750	3500	4500	5000	5000	5000

► Application of force F_{rad}: centre of shaft journal (x = l/2)
► $F_{ax,max}$ only valid with F_{rad} = 0

Output backlash in angular minutes

► Backlash ϕ depending on ratio i

GKR03...06-2

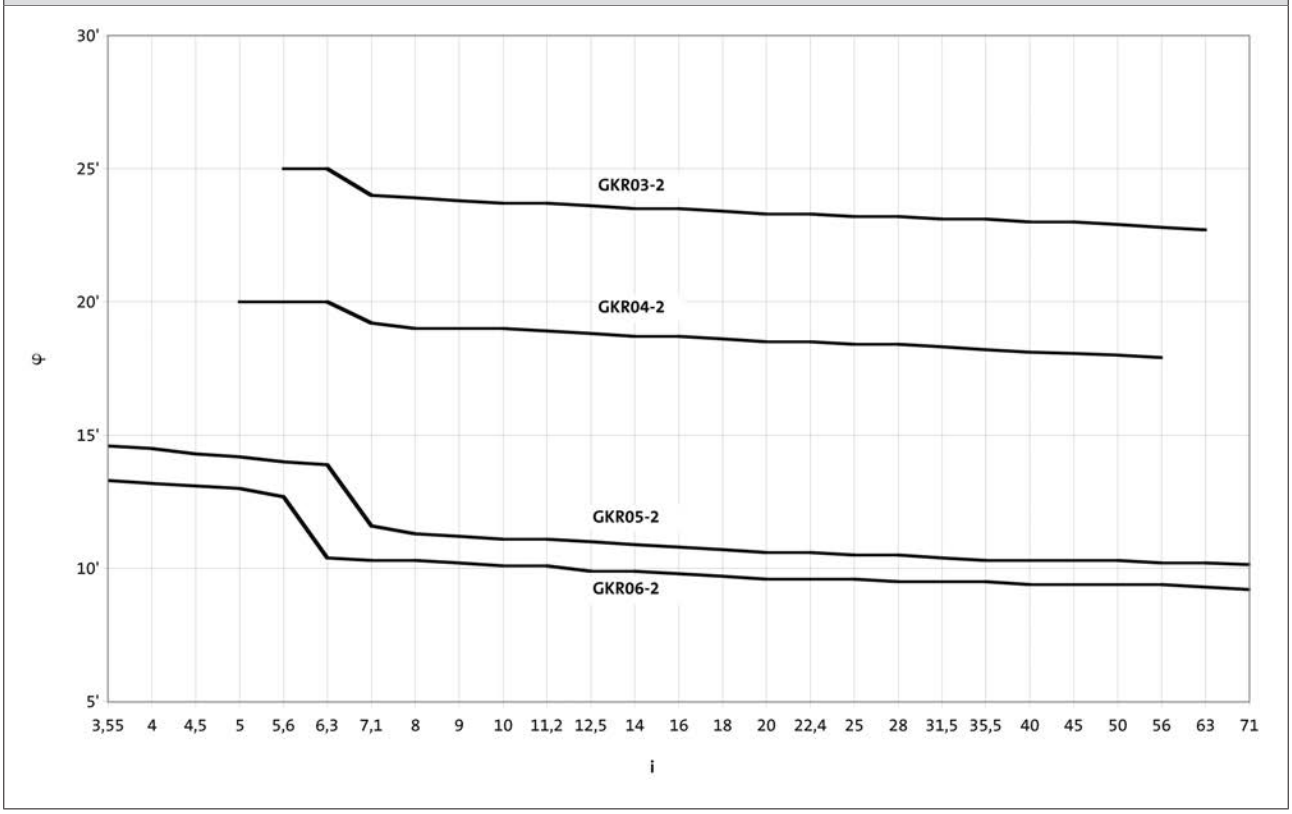

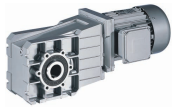

Moments of inertia

GKR□□-2

► Moment of inertia (J) depending on ratio i

Gearbox			GKR03
5.411	J	[kgcm²]	0.307
6.222	J	[kgcm²]	0.276
7.111	J	[kgcm²]	0.196
8.178	J	[kgcm²]	0.178
9.101	J	[kgcm²]	0.134
10.466	J	[kgcm²]	0.123
11.640	J	[kgcm²]	0.086
13.386	J	[kgcm²]	0.079
15.111	J	[kgcm²]	0.059
17.378	J	[kgcm²]	0.055
19.365	J	[kgcm²]	0.038
22.270	J	[kgcm²]	0.054
25.051	J	[kgcm²]	0.025
28.808	J	[kgcm²]	0.023
32.593	J	[kgcm²]	0.016
37.481	J	[kgcm²]	0.015
42.222	J	[kgcm²]	0.010
48.556	J	[kgcm²]	0.009
53.889	J	[kgcm²]	0.006
61.972	J	[kgcm²]	0.006

Gearbox			GKR04
5.185	J	[kgcm²]	0.813
5.963	J	[kgcm²]	0.723
7.111	J	[kgcm²]	0.446
8.178	J	[kgcm²]	0.410
9.101	J	[kgcm²]	3.270
10.466	J	[kgcm²]	0.300
11.449	J	[kgcm²]	0.260
12.698	J	[kgcm²]	1.990
14.603	J	[kgcm²]	0.181
15.556	J	[kgcm²]	1.470
17.889	J	[kgcm²]	0.135
19.556	J	[kgcm²]	0.096
22.489	J	[kgcm²]	0.090
25.185	J	[kgcm²]	0.065
28.963	J	[kgcm²]	0.060
31.919	J	[kgcm²]	0.042
36.707	J	[kgcm²]	0.040
40.000	J	[kgcm²]	0.029
46.000	J	[kgcm²]	0.027
52.698	J	[kgcm²]	0.017
60.603	J	[kgcm²]	0.017

Gearbox			GKR05
3.565	J	[kgcm²]	4.950
4.889	J	[kgcm²]	2.793
6.257	J	[kgcm²]	1.791
6.883	J	[kgcm²]	2.572
7.817	J	[kgcm²]	2.316
9.440	J	[kgcm²]	1.531
10.720	J	[kgcm²]	1.396
12.081	J	[kgcm²]	1.021
13.216	J	[kgcm²]	0.874
13.719	J	[kgcm²]	0.938
15.008	J	[kgcm²]	0.805
16.857	J	[kgcm²]	0.597
19.143	J	[kgcm²]	0.554
20.650	J	[kgcm²]	0.439
23.450	J	[kgcm²]	0.411
26.878	J	[kgcm²]	0.270
30.522	J	[kgcm²]	0.253
33.433	J	[kgcm²]	0.191
37.967	J	[kgcm²]	0.180
43.267	J	[kgcm²]	0.118
49.133	J	[kgcm²]	0.112
52.510	J	[kgcm²]	0.085
59.630	J	[kgcm²]	0.081
67.113	J	[kgcm²]	0.054
76.213	J	[kgcm²]	0.051

Gearbox			GKR06
3.431	J	[kgcm²]	9.576
4.706	J	[kgcm²]	5.607
6.022	J	[kgcm²]	3.658
6.481	J	[kgcm²]	5.112
7.146	J	[kgcm²]	4.539
8.889	J	[kgcm²]	3.233
9.800	J	[kgcm²]	2.929
11.376	J	[kgcm²]	2.209
12.444	J	[kgcm²]	1.890
13.720	J	[kgcm²]	1.734
15.873	J	[kgcm²]	1.321
17.500	J	[kgcm²]	1.225
19.444	J	[kgcm²]	0.991
21.438	J	[kgcm²]	0.928
25.309	J	[kgcm²]	0.632
27.903	J	[kgcm²]	0.594
31.481	J	[kgcm²]	0.457
34.708	J	[kgcm²]	0.432
40.741	J	[kgcm²]	0.284
44.917	J	[kgcm²]	0.270
49.444	J	[kgcm²]	0.207
54.513	J	[kgcm²]	0.197
62.500	J	[kgcm²]	0.134
68.906	J	[kgcm²]	0.127

► The moments of inertia relate to the drive shaft of the gearbox.
► The total moment of inertia is calculated by adding the values of the gearbox, motor and accessories.

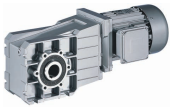

Weights

GKR□□-2M HAR / HBR

	063C02	063C11	063C12	063C22	063C31	063C32	063C42	071C11 071C13 071C31	071C32	071C33
GKR03 m [kg]	7		7			7			8	
GKR04 m [kg]		9			9				11	
GKR05 m [kg]							14	16	15	16
GKR06 m [kg]							22	24	23	24

	071C42	080C13 080C32 080C33	090C12	090C32	100C12	100C32	112C22	132C12	132C22
GKR03 m [kg]	9								
GKR04 m [kg]	11	16	22	24					
GKR05 m [kg]	16	21	26	28	34	37			
GKR06 m [kg]	24	29	35	37	43	45	58	80	87

GKR□□-2M HAK

	063C02	063C11	063C12	063C22	063C31	063C32	063C42	071C11	071C13 071C31	071C32
GKR03 m [kg]	7		7			7				9
GKR04 m [kg]		9			9		10	11	12	11
GKR05 m [kg]							15	17		16
GKR06 m [kg]							23	25		24

	071C33	071C42	080C13 080C32 080C33	090C12	090C32	100C12	100C32	112C22	132C12	132C22
GKR03 m [kg]		9								
GKR04 m [kg]	12		17	22	24					
GKR05 m [kg]	17		22	27	29	35	38			
GKR06 m [kg]	25		30	36	38	44	46	59	81	88

► Weights with oil filling for mounting position A; all values are approximate.
The weights relate to the basic version. Bear in mind that additional weights may be needed, e.g. for motor options.

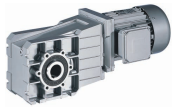

Weights

GKR□□-2M VAR / VBR

			063C02	063C11	063C12	063C22	063C31	063C32	063C42	071C11	071C13 071C31	071C32
GKR03	m	[kg]	7		7			7				9
GKR04	m	[kg]		9			9		10	11	12	11
GKR05	m	[kg]							15	17		16
GKR06	m	[kg]							24	25	26	25

			071C33	071C42	080C13 080C32 080C33	090C12	090C32	100C12	100C32	112C22	132C12	132C22
GKR03	m	[kg]		9								
GKR04	m	[kg]	12		17	22	24					
GKR05	m	[kg]	17		22	27	29	35	38			
GKR06	m	[kg]	26		30	37	39	45	47	60	82	89

GKR□□-2M VAK

			063C02	063C11	063C12	063C22	063C31	063C32	063C42	071C11	071C13 071C31	071C32
GKR03	m	[kg]	7		7			7	8			9
GKR04	m	[kg]		10			9		10		12	
GKR05	m	[kg]							16	18		17
GKR06	m	[kg]							25	26	27	26

			071C33	071C42	080C13 080C32 080C33	090C12	090C32	100C12	100C32	112C22	132C12	132C22
GKR03	m	[kg]		10								
GKR04	m	[kg]	12		17	23	25					
GKR05	m	[kg]	18		23	28	30	36	39			
GKR06	m	[kg]	27		31	38	40	46	48	61	83	90

► Weights with oil filling for mounting position A; all values are approximate.
The weights relate to the basic version. Bear in mind that additional weights may be needed, e.g. for motor options.

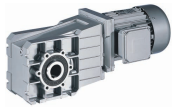

Weights

GKR□□-2M SAR / SBR

			063C11	063C12	063C31	063C32	063C42	071C11	071C13 071C31	071C32	071C33
GKR03	m	[kg]		7		7				9	
GKR04	m	[kg]	9				10	11	12	11	12
GKR05	m	[kg]					14	16	17	16	17
GKR06	m	[kg]					23	25		24	25

			071C42	080C13 080C32 080C33	090C12	090C32	100C12	100C32	112C22	132C12	132C22
GKR03	m	[kg]	9								
GKR04	m	[kg]	12	17	22	24					
GKR05	m	[kg]	17	21	27	29	35	38			
GKR06	m	[kg]	25	30	36	38	44	46	59	81	88

GKR□□-2M SAK

			063C11	063C12	063C31	063C32	063C42	071C11	071C13 071C31	071C32	071C33
GKR03	m	[kg]		7		7	8			9	
GKR04	m	[kg]	10		9	10		12			
GKR05	m	[kg]					15	17	18	17	18
GKR06	m	[kg]					24	26		25	26

			071C42	080C13 080C32 080C33	090C12	090C32	100C12	100C32	112C22	132C12	132C22
GKR03	m	[kg]	10								
GKR04	m	[kg]	12	17	23	25					
GKR05	m	[kg]	18	22	28	30	36	39			
GKR06	m	[kg]	26	31	37	39	45	47	60	82	89

► Weights with oil filling for mounting position A; all values are approximate.
The weights relate to the basic version. Bear in mind that additional weights may be needed, e.g. for motor options.

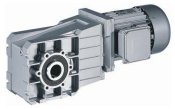

Selection tables

50 Hz, 60 Hz: P_N = 0.06 kW

n_N	1425 r/min				1735 r/min			i		
f_N	50 Hz				60 Hz					
	n_2 [r/min]	M_2 [Nm]	c		n_2 [r/min]	M_2 [Nm]	c			
	64	8.5	5.3					22.270	GKR03-2M □□□063C02	60
	57	9.6	4.7		69	7.9	5.7	25.051	GKR03-2M □□□063C02	60
	50	11	4.1		60	9.0	5.0	28.808	GKR03-2M □□□063C02	60
	44	12	3.6		53	10	4.4	32.593	GKR03-2M □□□063C02	60
	38	14	3.1		46	12	3.8	37.481	GKR03-2M □□□063C02	60
	34	16	2.8		41	13	3.4	42.222	GKR03-2M □□□063C02	60
	29	19	2.4		36	15	3.0	48.556	GKR03-2M □□□063C02	60
	26	21	2.2		32	17	2.7	53.889	GKR03-2M □□□063C02	60
	23	24	1.9		28	19	2.3	61.972	GKR03-2M □□□063C02	60

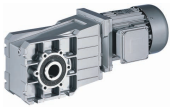

Selection tables

50 Hz, 60 Hz: P_N = 0.09 kW

n_N	1375 r/min				1695 r/min			i		
f_N	50 Hz				60 Hz					
	n_2 [r/min]	M_2 [Nm]	c		n_2 [r/min]	M_2 [Nm]	c			
	103	7.9	5.7					13.386	GKR03-2M □□□063C22	60
	91	9.0	5.0		111	7.3	5.9	15.111	GKR03-2M □□□063C22	60
	79	10	4.4		96	8.4	5.2	17.378	GKR03-2M □□□063C22	60
	71	11	3.9		87	9.3	4.6	19.365	GKR03-2M □□□063C22	60
	62	13	3.4		75	11	4.0	22.270	GKR03-2M □□□063C22	60
	55	15	3.0		67	12	3.7	25.051	GKR03-2M □□□063C22	60
	48	17	2.6		58	14	3.2	28.808	GKR03-2M □□□063C22	60
	42	19	2.3		51	16	2.9	32.593	GKR03-2M □□□063C22	60
	37	22	2.0		45	18	2.5	37.481	GKR03-2M □□□063C22	60
	33	25	1.8		40	20	2.2	42.222	GKR03-2M □□□063C22	60
	28	29	1.6		35	23	1.9	48.556	GKR03-2M □□□063C22	60
	26	32	1.4		31	26	1.7	53.889	GKR03-2M □□□063C22	60
	22	37	1.2		27	30	1.5	61.972	GKR03-2M □□□063C22	60

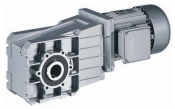

Selection tables

50 Hz, 60 Hz: P_N = 0.12 kW

n_N	1425 r/min				1735 r/min			i		
f_N	50 Hz				60 Hz					
	n_2 [r/min]	M_2 [Nm]	c		n_2 [r/min]	M_2 [Nm]	c			
	136	8.0	5.6		165	6.6	6.5	10.466	GKR03-2M □□□063C12	60
	124	8.7	5.4		151	7.2	6.2	11.449	GKR04-2M □□□063C12	60
	122	8.9	5.1		148	7.3	5.9	11.640	GKR03-2M □□□063C12	60
	112	9.7	5.0		136	8.0	5.8	12.698	GKR04-2M □□□063C12	60
	107	10	4.4		129	8.4	5.1	13.386	GKR03-2M □□□063C12	60
	98	11	5.0		118	9.2	5.8	14.603	GKR04-2M □□□063C12	60
	94	12	3.9		114	9.5	4.5	15.111	GKR03-2M □□□063C12	60
	82	13	3.4		99	11	3.9	17.378	GKR03-2M □□□063C12	60
	74	15	3.0		89	12	3.5	19.365	GKR03-2M □□□063C12	60
	73	15	5.5		88	12	6.4	19.556	GKR04-2M □□□063C12	60
	64	17	2.6		78	14	3.1	22.270	GKR03-2M □□□063C12	60
	63	17	5.2		77	14	6.1	22.489	GKR04-2M □□□063C12	60
	57	19	2.4		69	16	2.9	25.051	GKR03-2M □□□063C12	60
	57	19	4.6		69	16	5.6	25.185	GKR04-2M □□□063C12	60
	50	22	2.0		60	18	2.5	28.808	GKR03-2M □□□063C12	60
	49	22	4.1		60	18	5.0	28.963	GKR04-2M □□□063C12	60
	45	24	3.7		54	20	4.5	31.919	GKR04-2M □□□063C12	60
	44	25	1.8		53	20	2.2	32.593	GKR03-2M □□□063C12	60
	39	28	3.2		47	23	3.9	36.707	GKR04-2M □□□063C12	60
	38	29	1.6		46	24	1.9	37.481	GKR03-2M □□□063C12	60
	36	31	2.9		43	25	3.6	40.000	GKR04-2M □□□063C12	60
	34	32	1.4		41	26	1.7	42.222	GKR03-2M □□□063C12	60
	31	35	2.6		38	29	3.1	46.000	GKR04-2M □□□063C12	60
	29	37	1.2		36	30	1.5	48.556	GKR03-2M □□□063C12	60
	27	40	1.7		33	33	2.1	52.698	GKR04-2M □□□063C12	60
	26	41	1.1		32	34	1.3	53.889	GKR03-2M □□□063C12	60
	24	46	1.7		29	38	2.1	60.603	GKR04-2M □□□063C12	60
	23	47	1.0		28	39	1.2	61.972	GKR03-2M □□□063C12	60

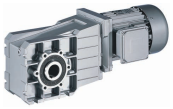

Selection tables

50 Hz, 60 Hz: P_N = 0.18 kW

n_N	2740 r/min				3370 r/min			i		
f_N	50 Hz				60 Hz					
	n_2 [r/min]	M_2 [Nm]	c		n_2 [r/min]	M_2 [Nm]	c			
	239	6.8	5.6		292	5.5	6.5	11.449	GKR04-2M □□□063C11	60
	216	7.6	5.2		263	6.2	6.0	12.698	GKR04-2M □□□063C11	60
	188	8.7	5.2		229	7.1	6.0	14.603	GKR04-2M □□□063C11	60
	140	12	5.8		171	9.5	6.6	19.556	GKR04-2M □□□063C11	60
	122	13	5.5		149	11	6.3	22.489	GKR04-2M □□□063C11	60
	109	15	5.5		133	12	6.3	25.185	GKR04-2M □□□063C11	60
	95	17	4.8		115	14	5.6	28.963	GKR04-2M □□□063C11	60
	86	19	4.4		105	15	5.0	31.919	GKR04-2M □□□063C11	60
	75	22	3.8		91	18	4.4	36.707	GKR04-2M □□□063C11	60
	69	24	3.5		84	19	4.0	40.000	GKR04-2M □□□063C11	60
	60	27	3.3		73	22	3.9	46.000	GKR04-2M □□□063C11	60
	52	31	2.2		63	26	2.6	52.698	GKR04-2M □□□063C11	60
	45	36	2.2		55	29	2.6	60.603	GKR04-2M □□□063C11	60

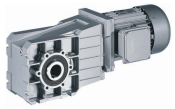

Selection tables

50 Hz, 60 Hz: P_N = 0.18 kW

n_N	1365 r/min				1695 r/min			i		
f_N	50 Hz				60 Hz					
	n_2 [r/min]	M_2 [Nm]	c		n_2 [r/min]	M_2 [Nm]	c			
	219	7.4	5.4		268	6.0	6.5	6.222	GKR03-2M □□□063C32	60
	192	8.5	5.1		234	6.9	6.0	7.111	GKR03-2M □□□063C32	60
	167	9.8	4.5		204	7.9	5.4	8.178	GKR03-2M □□□063C32	60
	150	11	4.1		183	8.8	4.9	9.101	GKR03-2M □□□063C32	60
	130	13	3.6		159	10	4.3	10.466	GKR03-2M □□□063C32	60
	119	14	3.4		145	11	4.1	11.449	GKR04-2M □□□063C32	60
	117	14	3.2		143	11	3.9	11.640	GKR03-2M □□□063C32	60
	108	15	3.2		131	12	3.8	12.698	GKR04-2M □□□063C32	60
	102	16	2.8		124	13	3.4	13.386	GKR03-2M □□□063C32	60
	94	17	3.2		114	14	3.8	14.603	GKR04-2M □□□063C32	60
	90	18	2.5		110	15	3.0	15.111	GKR03-2M □□□063C32	60
	79	21	2.2		96	17	2.6	17.378	GKR03-2M □□□063C32	60
	71	23	1.9		86	19	2.3	19.365	GKR03-2M □□□063C32	60
	70	23	3.5		85	19	4.2	19.556	GKR04-2M □□□063C32	60
	61	27	1.7		75	21	2.0	22.270	GKR03-2M □□□063C32	60
	61	27	3.3		74	22	4.0	22.489	GKR04-2M □□□063C32	60
	55	30	1.5		67	24	1.9	25.051	GKR03-2M □□□063C32	60
	54	30	2.9		66	24	3.6	25.185	GKR04-2M □□□063C32	60
	47	34	1.3		58	28	1.6	28.808	GKR03-2M □□□063C32	60
	47	35	2.6		58	28	3.2	28.963	GKR04-2M □□□063C32	60
	43	38	2.4		52	31	2.9	31.919	GKR04-2M □□□063C32	60
	42	39	1.2		51	31	1.4	32.593	GKR03-2M □□□063C32	60
	37	44	2.0		45	35	2.5	36.707	GKR04-2M □□□063C32	60
	36	45	1.0		44	36	1.2	37.481	GKR03-2M □□□063C32	60
	34	48	1.9		42	39	2.3	40.000	GKR04-2M □□□063C32	60
	32	51	0.9		39	41	1.1	42.222	GKR03-2M □□□063C32	60
	30	55	1.6		36	44	2.0	46.000	GKR04-2M □□□063C32	60
					35	47	1.0	48.556	GKR03-2M □□□063C32	60
	26	63	1.1		32	51	1.4	52.698	GKR04-2M □□□063C32	60
					31	52	0.9	53.889	GKR03-2M □□□063C32	60
	23	73	1.1		28	58	1.4	60.603	GKR04-2M □□□063C32	60

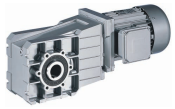

Selection tables

50 Hz, 60 Hz: P_N = 0.18 kW

n_N	930 r/min				1140 r/min			i		
f_N	50 Hz				60 Hz					
	n_2 [r/min]	M_2 [Nm]	c		n_2 [r/min]	M_2 [Nm]	c			
	179	9.1	5.4		218	7.4	6.6	5.185	GKR04-2M □□□071C13	60
	156	10	5.4		190	8.5	6.6	5.963	GKR04-2M □□□071C13	60
	131	12	5.4		159	10	6.6	7.111	GKR04-2M □□□071C13	60
	114	14	5.4		138	12	6.6	8.178	GKR04-2M □□□071C13	60
	102	16	5.3		124	13	6.5	9.101	GKR04-2M □□□071C13	60
	89	18	4.8		108	15	5.9	10.466	GKR04-2M □□□071C13	60
	81	20	4.5		99	16	5.5	11.449	GKR04-2M □□□071C13	60
	73	22	4.0		89	18	4.9	12.698	GKR04-2M □□□071C13	60
	70	23	5.4		86	19	6.6	13.216	GKR05-2M □□□071C13	60
	64	26	3.5		77	21	4.3	14.603	GKR04-2M □□□071C13	60
	62	26	5.4		75	21	6.6	15.008	GKR05-2M □□□071C13	60
	60	27	3.3		73	22	4.0	15.556	GKR04-2M □□□071C13	60
	52	31	2.9		63	26	3.5	17.889	GKR04-2M □□□071C13	60
	48	34	2.6		58	28	3.2	19.556	GKR04-2M □□□071C13	60
	41	39	2.3		50	32	2.8	22.489	GKR04-2M □□□071C13	60
	37	44	2.0		45	36	2.5	25.185	GKR04-2M □□□071C13	60
	32	51	1.8		39	41	2.2	28.963	GKR04-2M □□□071C13	60
	31	54	4.5		37	44	5.5	30.522	GKR05-2M □□□071C13	60
	29	56	1.6		35	46	2.0	31.919	GKR04-2M □□□071C13	60
	25	64	1.4		31	53	1.7	36.707	GKR04-2M □□□071C13	60
	23	70	1.3		28	57	1.6	40.000	GKR04-2M □□□071C13	60
	22	76	3.2		26	62	3.9	43.267	GKR05-2M □□□071C13	60
	20	81	1.1		25	66	1.4	46.000	GKR04-2M □□□071C13	60
	19	86	2.8		23	70	3.4	49.133	GKR05-2M □□□071C13	60
	18	92	2.6		22	75	3.2	52.510	GKR05-2M □□□071C13	60
	17	96	3.8		21	78	4.6	54.513	GKR06-2M □□□071C13	60
	16	105	2.3		19	85	2.8	59.630	GKR05-2M □□□071C13	60
	15	110	3.0		18	90	3.7	62.500	GKR06-2M □□□071C13	60
	14	118	1.5		17	96	1.9	67.112	GKR05-2M □□□071C13	60
	14	121	3.0		16	99	3.7	68.906	GKR06-2M □□□071C13	60
	12	134	1.5		15	109	1.9	76.213	GKR05-2M □□□071C13	60

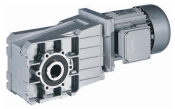

Selection tables

50 Hz, 60 Hz: P_N = 0.25 kW

n_N	2710 r/min				3390 r/min			i		
f_N	50 Hz				60 Hz					
	n_2 [r/min]	M_2 [Nm]	c		n_2 [r/min]	M_2 [Nm]	c			
	237	9.6	4.0		289	7.7	4.7	11.449	GKR04-2M □□□063C31	60
	213	11	3.8		261	8.5	4.4	12.698	GKR04-2M □□□063C31	60
	186	12	3.8		227	9.8	4.4	14.603	GKR04-2M □□□063C31	60
	139	16	4.1		169	13	4.8	19.556	GKR04-2M □□□063C31	60
	121	19	3.9		147	15	4.6	22.489	GKR04-2M □□□063C31	60
	108	21	3.9		131	17	4.5	25.185	GKR04-2M □□□063C31	60
	94	24	3.5		114	19	4.0	28.963	GKR04-2M □□□063C31	60
	85	27	3.1		104	21	3.6	31.919	GKR04-2M □□□063C31	60
	74	31	2.7		90	25	3.2	36.707	GKR04-2M □□□063C31	60
	68	33	2.5		83	27	2.9	40.000	GKR04-2M □□□063C31	60
	59	38	2.3		72	31	2.8	46.000	GKR04-2M □□□063C31	60
	51	44	1.6		63	35	1.9	52.698	GKR04-2M □□□063C31	60
	45	51	1.6		55	41	1.9	60.603	GKR04-2M □□□063C31	60

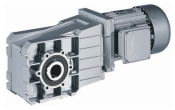

Selection tables

50 Hz, 60 Hz: P_N = 0.25 kW

n_N	1370 r/min				1680 r/min			i		
f_N	50 Hz				60 Hz					
	n_2 [r/min]	M_2 [Nm]	c		n_2 [r/min]	M_2 [Nm]	c			
	264	8.6	4.5		322	7.0	5.4	5.185	GKR04-2M □□□063C42	60
	253	9.0	4.4		309	7.3	5.2	5.411	GKR03-2M □□□063C42	60
	230	9.9	4.5		280	8.1	5.4	5.963	GKR04-2M □□□063C42	60
	220	10	3.9		268	8.4	4.6	6.222	GKR03-2M □□□063C42	60
	193	12	3.7		235	9.6	4.3	7.111	GKR03-2M □□□063C42	60
	193	12	4.5		235	9.6	5.4	7.111	GKR04-2M □□□063C42	60
	168	14	3.3		204	11	3.9	8.178	GKR03-2M □□□063C42	60
	168	14	4.5		204	11	5.4	8.178	GKR04-2M □□□063C42	60
	151	15	3.0		184	12	3.5	9.101	GKR03-2M □□□063C42	60
	151	15	5.2		184	12	6.2	9.101	GKR04-2M □□□063C42	60
	131	17	2.6		160	14	3.1	10.466	GKR03-2M □□□063C42	60
	131	17	5.1		160	14	6.0	10.466	GKR04-2M □□□063C42	60
	120	19	4.7		146	15	5.6	11.449	GKR04-2M □□□063C42	60
	118	19	2.3		144	16	2.8	11.640	GKR03-2M □□□063C42	60
	108	21	4.3		132	17	5.1	12.698	GKR04-2M □□□063C42	60
	104	22	4.5		126	18	5.4	13.216	GKR05-2M □□□063C42	60
	102	22	2.0		125	18	2.4	13.386	GKR03-2M □□□063C42	60
	94	24	3.7		114	20	4.4	14.603	GKR04-2M □□□063C42	60
	91	25	4.5		111	20	5.4	15.008	GKR05-2M □□□063C42	60
	91	25	1.8		111	20	2.1	15.111	GKR03-2M □□□063C42	60
	88	26	3.5		107	21	4.1	15.556	GKR04-2M □□□063C42	60
	79	29	1.6		96	23	1.8	17.378	GKR03-2M □□□063C42	60
	77	30	3.0		93	24	3.6	17.889	GKR04-2M □□□063C42	60
	71	32	1.4		86	26	1.7	19.365	GKR03-2M □□□063C42	60
	70	32	2.8		85	26	3.3	19.556	GKR04-2M □□□063C42	60
	62	37	1.2		75	30	1.4	22.270	GKR03-2M □□□063C42	60
	61	37	2.4		74	30	2.9	22.489	GKR04-2M □□□063C42	60
	55	41	1.1		67	34	1.3	25.051	GKR03-2M □□□063C42	60
	54	42	2.2		66	34	2.6	25.185	GKR04-2M □□□063C42	60
	48	48	0.9		58	39	1.2	28.808	GKR03-2M □□□063C42	60
	47	48	1.9		58	39	2.3	28.963	GKR04-2M □□□063C42	60
	45	51	4.3		55	41	5.3	30.522	GKR05-2M □□□063C42	60
	43	53	1.7		52	43	2.1	31.919	GKR04-2M □□□063C42	60
	42	54	0.8		51	44	1.0	32.593	GKR03-2M □□□063C42	60
	37	61	1.5		46	50	1.8	36.707	GKR04-2M □□□063C42	60
					45	51	0.9	37.481	GKR03-2M □□□063C42	60
	34	66	1.2		42	54	1.5	40.000	GKR04-2M □□□063C42	60
	30	76	1.2		36	62	1.4	46.000	GKR04-2M □□□063C42	60
	28	81	3.0		34	66	3.6	49.133	GKR05-2M □□□063C42	60
	28	82	3.2		34	67	3.9	49.444	GKR06-2M □□□063C42	60

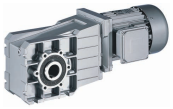

Selection tables

50 Hz, 60 Hz: P_N = 0.25 kW

n_N	1370 r/min				1680 r/min			i		
f_N	50 Hz				60 Hz					
	n_2 [r/min]	M_2 [Nm]	c		n_2 [r/min]	M_2 [Nm]	c			
	26	87	2.8		32	71	3.4	52.510	GKR05-2M □□□063C42	60
	25	90	3.2		31	74	3.9	54.513	GKR06-2M □□□063C42	60
	23	99	2.4		28	81	3.0	59.630	GKR05-2M □□□063C42	60
	22	103	2.6		27	84	3.2	62.500	GKR06-2M □□□063C42	60
	20	111	1.4		25	91	1.7	67.112	GKR05-2M □□□063C42	60
	20	114	2.6		24	93	3.2	68.906	GKR06-2M □□□063C42	60
	18	126	1.4		22	103	1.7	76.213	GKR05-2M □□□063C42	60

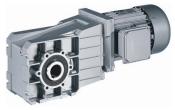

Selection tables

50 Hz, 60 Hz: P_N = 0.25 kW

n_N	930 r/min				1140 r/min			i		
f_N	50 Hz				60 Hz					
	n_2 [r/min]	M_2 [Nm]	c		n_2 [r/min]	M_2 [Nm]	c			
	179	13	3.9		218	10	4.7	5.185	GKR04-2M □□□071C33	60
	156	15	3.9		190	12	4.7	5.963	GKR04-2M □□□071C33	60
	131	17	3.9		159	14	4.7	7.111	GKR04-2M □□□071C33	60
	114	20	3.9		138	16	4.7	8.178	GKR04-2M □□□071C33	60
	102	22	3.8		124	18	4.7	9.101	GKR04-2M □□□071C33	60
	89	26	3.5		108	21	4.3	10.466	GKR04-2M □□□071C33	60
	81	28	3.2		99	23	4.0	11.449	GKR04-2M □□□071C33	60
	73	31	2.9		89	25	3.6	12.698	GKR04-2M □□□071C33	60
	70	32	3.9		86	26	4.7	13.216	GKR05-2M □□□071C33	60
	64	36	2.5		77	29	3.1	14.603	GKR04-2M □□□071C33	60
	62	37	3.9		75	30	4.7	15.008	GKR05-2M □□□071C33	60
	60	38	2.4		73	31	2.9	15.556	GKR04-2M □□□071C33	60
	52	44	2.1		63	36	2.5	17.889	GKR04-2M □□□071C33	60
	48	48	1.9		58	39	2.3	19.556	GKR04-2M □□□071C33	60
	41	55	1.6		50	45	2.0	22.489	GKR04-2M □□□071C33	60
	37	61	1.5		45	50	1.8	25.185	GKR04-2M □□□071C33	60
	32	71	1.3		39	58	1.6	28.963	GKR04-2M □□□071C33	60
	31	74	3.2		37	61	4.0	30.522	GKR05-2M □□□071C33	60
	29	78	1.2		35	64	1.4	31.919	GKR04-2M □□□071C33	60
	28	82	2.9		34	67	3.6	33.433	GKR05-2M □□□071C33	60
	25	90	1.0		31	73	1.2	36.707	GKR04-2M □□□071C33	60
	25	93	2.6		30	76	3.2	37.967	GKR05-2M □□□071C33	60
	23	98	0.9		28	80	1.1	40.000	GKR04-2M □□□071C33	60
	23	99	3.1		28	81	3.8	40.741	GKR06-2M □□□071C33	60
	22	106	2.3		26	86	2.8	43.267	GKR05-2M □□□071C33	60
	21	110	3.1		25	89	3.8	44.917	GKR06-2M □□□071C33	60
	20	112	0.8		25	92	1.0	46.000	GKR04-2M □□□071C33	60
	19	120	2.0		23	98	2.5	49.133	GKR05-2M □□□071C33	60
	19	121	2.7		23	98	3.3	49.444	GKR06-2M □□□071C33	60
	18	128	1.9		22	104	2.3	52.510	GKR05-2M □□□071C33	60
	17	133	2.7		21	108	3.3	54.513	GKR06-2M □□□071C33	60
	16	145	1.7		19	119	2.0	59.630	GKR05-2M □□□071C33	60
	15	152	2.2		18	124	2.7	62.500	GKR06-2M □□□071C33	60
	14	164	1.1		17	134	1.3	67.112	GKR05-2M □□□071C33	60
	14	168	2.2		16	137	2.7	68.906	GKR06-2M □□□071C33	60
	12	186	1.1		15	152	1.3	76.213	GKR05-2M □□□071C33	60

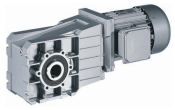

Selection tables

50 Hz, 60 Hz: P_N = 0.37 kW

n_N	2720 r/min				3360 r/min			i		
f_N	50 Hz				60 Hz					
	n_2 [r/min]	M_2 [Nm]	c		n_2 [r/min]	M_2 [Nm]	c			
	260	13	5.6		317	10	6.5	10.466	GKR04-2M □□□071C11	60
	238	14	5.2		290	11	6.0	11.449	GKR04-2M □□□071C11	60
	214	16	4.7		262	13	5.4	12.698	GKR04-2M □□□071C11	60
	186	18	4.1		227	15	4.7	14.603	GKR04-2M □□□071C11	60
	175	19	3.8		213	16	4.4	15.556	GKR04-2M □□□071C11	60
	152	22	3.3		186	18	3.8	17.889	GKR04-2M □□□071C11	60
	139	24	3.1		170	20	3.5	19.556	GKR04-2M □□□071C11	60
	121	28	2.7		148	22	3.1	22.489	GKR04-2M □□□071C11	60
	108	31	2.7		132	25	3.1	25.185	GKR04-2M □□□071C11	60
	94	36	2.3		115	29	2.7	28.963	GKR04-2M □□□071C11	60
	89	38	5.9		109	30	6.8	30.522	GKR05-2M □□□071C11	60
	85	39	2.1		104	32	2.5	31.919	GKR04-2M □□□071C11	60
	74	45	1.9		90	37	2.1	36.707	GKR04-2M □□□071C11	60
	68	49	1.7		83	40	2.0	40.000	GKR04-2M □□□071C11	60
	59	57	1.6		72	46	1.9	46.000	GKR04-2M □□□071C11	60
	55	61	4.0		68	49	4.7	49.133	GKR05-2M □□□071C11	60
	52	65	3.7		63	52	4.4	52.510	GKR05-2M □□□071C11	60
	50	67	5.4		62	54	6.4	54.513	GKR06-2M □□□071C11	60
	46	74	3.3		56	60	3.9	59.630	GKR05-2M □□□071C11	60
	44	77	4.3		53	62	5.1	62.500	GKR06-2M □□□071C11	60
	41	83	2.2		50	67	2.6	67.112	GKR05-2M □□□071C11	60
	40	85	4.3		48	69	5.1	68.906	GKR06-2M □□□071C11	60
	36	94	2.2		44	76	2.6	76.213	GKR05-2M □□□071C11	60

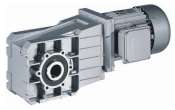

Selection tables

50 Hz, 60 Hz: P_N = 0.37 kW

n_N	1410 r/min				1720 r/min			i		
f_N	50 Hz				60 Hz					
	n_2 [r/min]	M_2 [Nm]	c		n_2 [r/min]	M_2 [Nm]	c			
	272	12	4.0		330	10	4.6	5.185	GKR04-2M □□□071C32	60
	261	13	3.1		316	11	3.6	5.411	GKR03-2M □□□071C32	60
	237	14	4.0		287	12	4.6	5.963	GKR04-2M □□□071C32	60
	227	15	2.7		275	12	3.2	6.222	GKR03-2M □□□071C32	60
	198	17	2.5		241	14	3.0	7.111	GKR03-2M □□□071C32	60
	198	17	4.0		241	14	4.6	7.111	GKR04-2M □□□071C32	60
	172	19	2.3		209	16	2.7	8.178	GKR03-2M □□□071C32	60
	172	19	4.0		209	16	4.6	8.178	GKR04-2M □□□071C32	60
	155	22	2.1		188	18	2.4	9.101	GKR03-2M □□□071C32	60
	155	22	3.9		188	18	4.5	9.101	GKR04-2M □□□071C32	60
	135	25	1.8		163	20	2.1	10.466	GKR03-2M □□□071C32	60
	135	25	3.6		163	20	4.1	10.466	GKR04-2M □□□071C32	60
	123	27	3.3		149	22	3.8	11.449	GKR04-2M □□□071C32	60
	121	28	1.6		147	23	1.9	11.640	GKR03-2M □□□071C32	60
	111	30	3.0		135	25	3.5	12.698	GKR04-2M □□□071C32	60
	107	31	4.0		129	26	4.6	13.216	GKR05-2M □□□071C32	60
	105	32	1.4		128	26	1.6	13.386	GKR03-2M □□□071C32	60
	97	35	2.6		117	28	3.0	14.603	GKR04-2M □□□071C32	60
	94	36	4.0		114	29	4.6	15.008	GKR05-2M □□□071C32	60
	93	36	1.3		113	29	1.5	15.111	GKR03-2M □□□071C32	60
	91	37	2.4		110	30	2.8	15.556	GKR04-2M □□□071C32	60
	81	41	1.1		98	34	1.3	17.378	GKR03-2M □□□071C32	60
	79	43	2.1		96	35	2.5	17.889	GKR04-2M □□□071C32	60
	73	46	1.0		88	38	1.1	19.365	GKR03-2M □□□071C32	60
	72	47	1.9		87	38	2.3	19.556	GKR04-2M □□□071C32	60
	63	53	0.8		77	43	1.0	22.270	GKR03-2M □□□071C32	60
	63	54	1.7		76	44	2.0	22.489	GKR04-2M □□□071C32	60
					69	49	0.9	25.051	GKR03-2M □□□071C32	60
	56	60	1.5		68	49	1.8	25.185	GKR04-2M □□□071C32	60
					60	56	0.8	28.808	GKR03-2M □□□071C32	60
	49	69	1.3		59	57	1.6	28.963	GKR04-2M □□□071C32	60
	46	73	3.3		56	60	4.0	30.522	GKR05-2M □□□071C32	60
	44	76	1.2		54	62	1.4	31.919	GKR04-2M □□□071C32	60
	42	80	3.0		51	65	3.7	33.433	GKR05-2M □□□071C32	60
	38	87	1.0		47	72	1.3	36.707	GKR04-2M □□□071C32	60
	37	90	2.7		45	74	3.2	37.967	GKR05-2M □□□071C32	60
	35	95	0.9		43	78	1.2	40.000	GKR04-2M □□□071C32	60
	35	97	3.2		42	80	3.9	40.741	GKR06-2M □□□071C32	60
	33	103	2.3		40	84	2.8	43.267	GKR05-2M □□□071C32	60
	31	107	3.2		38	88	3.9	44.917	GKR06-2M □□□071C32	60

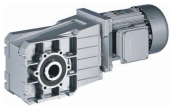

Selection tables

50 Hz, 60 Hz: P_N = 0.37 kW

n_N	1410 r/min				1720 r/min			i		
f_N	50 Hz				60 Hz					
	n_2 [r/min]	M_2 [Nm]	c		n_2 [r/min]	M_2 [Nm]	c			
	31	110	0.8		37	90	1.0	46.000	GKR04-2M □□□071C32	60
	29	117	2.1		35	96	2.5	49.133	GKR05-2M □□□071C32	60
	29	118	2.8		35	96	3.4	49.444	GKR06-2M □□□071C32	60
	27	125	1.9		33	102	2.3	52.510	GKR05-2M □□□071C32	60
	26	130	2.8		32	106	3.4	54.513	GKR06-2M □□□071C32	60
	24	142	1.7		29	116	2.1	59.630	GKR05-2M □□□071C32	60
	23	149	2.2		27	122	2.7	62.500	GKR06-2M □□□071C32	60
	21	160	1.1		26	131	1.4	67.112	GKR05-2M □□□071C32	60
	21	164	2.2		25	134	2.7	68.906	GKR06-2M □□□071C32	60
	19	181	1.1		23	149	1.4	76.213	GKR05-2M □□□071C32	60

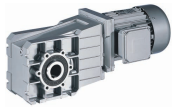

Selection tables

50 Hz, 60 Hz: P_N = 0.37 kW

n_N	950 r/min				1160 r/min			i		
f_N	50 Hz				60 Hz					
	n_2 [r/min]	M_2 [Nm]	c		n_2 [r/min]	M_2 [Nm]	c			
	183	18	3.8		222	15	4.6	5.185	GKR04-2M □□□080C13	60
	159	21	3.4		193	17	4.2	5.963	GKR04-2M □□□080C13	60
	152	22	5.7		184	18	6.9	6.257	GKR05-2M □□□080C13	60
	134	25	3.1		162	21	3.8	7.111	GKR04-2M □□□080C13	60
	116	29	2.8		141	24	3.4	8.178	GKR04-2M □□□080C13	60
	104	32	2.6		126	26	3.2	9.101	GKR04-2M □□□080C13	60
	91	37	2.4		110	30	2.9	10.466	GKR04-2M □□□080C13	60
	83	40	2.2		100	33	2.7	11.449	GKR04-2M □□□080C13	60
	75	45	2.0		91	37	2.4	12.698	GKR04-2M □□□080C13	60
	72	47	4.6		87	38	5.6	13.216	GKR05-2M □□□080C13	60
	65	52	1.7		79	42	2.1	14.603	GKR04-2M □□□080C13	60
	63	53	4.2		77	43	5.1	15.008	GKR05-2M □□□080C13	60
	61	55	1.6		74	45	2.0	15.556	GKR04-2M □□□080C13	60
	53	63	1.4		64	52	1.7	17.889	GKR04-2M □□□080C13	60
	49	69	1.3		59	57	1.6	19.556	GKR04-2M □□□080C13	60
	42	79	1.1		51	65	1.4	22.489	GKR04-2M □□□080C13	60
	41	83	2.9		49	68	3.5	23.450	GKR05-2M □□□080C13	60
	38	89	1.0		46	73	1.2	25.185	GKR04-2M □□□080C13	60
	35	95	2.5		43	78	3.1	26.878	GKR05-2M □□□080C13	60
	33	102	0.9		40	84	1.1	28.963	GKR04-2M □□□080C13	60
	31	108	2.2		38	88	2.7	30.522	GKR05-2M □□□080C13	60
	30	111	4.0		37	91	4.8	31.481	GKR06-2M □□□080C13	60
	28	118	2.0		34	97	2.5	33.433	GKR05-2M □□□080C13	60
	25	134	1.8		30	110	2.2	37.967	GKR05-2M □□□080C13	60
	23	144	3.1		28	118	3.8	40.741	GKR06-2M □□□080C13	60
	22	153	1.6		27	125	1.9	43.267	GKR05-2M □□□080C13	60
	21	159	2.8		26	130	3.5	44.917	GKR06-2M □□□080C13	60
	19	174	1.4		23	142	1.7	49.133	GKR05-2M □□□080C13	60
	19	175	2.6		23	143	3.1	49.444	GKR06-2M □□□080C13	60
	18	186	1.3		22	152	1.6	52.510	GKR05-2M □□□080C13	60
	17	193	2.3		21	158	2.9	54.513	GKR06-2M □□□080C13	60
	16	211	1.1		19	173	1.4	59.630	GKR05-2M □□□080C13	60
	15	221	1.7		18	181	2.1	62.500	GKR06-2M □□□080C13	60
	14	243	1.7		17	199	2.1	68.906	GKR06-2M □□□080C13	60

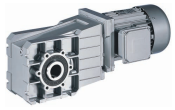

Selection tables

50 Hz, 60 Hz: P_N = 0.55 kW

n_N	2630 r/min				3240 r/min			i		
f_N	50 Hz				60 Hz					
	n_2 [r/min]	M_2 [Nm]	c		n_2 [r/min]	M_2 [Nm]	c			
	507	9.8	4.1		623	8.0	4.7	5.185	GKR04-2M □□□071C31	60
	441	11	4.1		542	9.2	4.7	5.963	GKR04-2M □□□071C31	60
	370	13	4.1		454	11	4.7	7.111	GKR04-2M □□□071C31	60
	322	16	4.1		395	13	4.7	8.178	GKR04-2M □□□071C31	60
	289	17	4.1		355	14	4.7	9.101	GKR04-2M □□□071C31	60
	251	20	3.7		309	16	4.2	10.466	GKR04-2M □□□071C31	60
	230	22	3.4		282	18	3.9	11.449	GKR04-2M □□□071C31	60
	207	24	3.1		254	20	3.6	12.698	GKR04-2M □□□071C31	60
	199	25	4.1		244	20	4.7	13.216	GKR05-2M □□□071C31	60
	180	28	2.7		221	22	3.1	14.603	GKR04-2M □□□071C31	60
	175	28	4.1		215	23	4.7	15.008	GKR05-2M □□□071C31	60
	169	30	2.5		208	24	2.9	15.556	GKR04-2M □□□071C31	60
	147	34	2.2		181	28	2.5	17.889	GKR04-2M □□□071C31	60
	135	37	2.0		165	30	2.3	19.556	GKR04-2M □□□071C31	60
	117	43	1.7		144	35	2.0	22.489	GKR04-2M □□□071C31	60
	104	48	1.8		128	39	2.0	25.185	GKR04-2M □□□071C31	60
	91	55	1.5		112	45	1.8	28.963	GKR04-2M □□□071C31	60
	86	58	3.9		106	47	4.5	30.522	GKR05-2M □□□071C31	60
	82	61	1.4		101	49	1.6	31.919	GKR04-2M □□□071C31	60
	72	70	1.2		88	57	1.4	36.707	GKR04-2M □□□071C31	60
	69	72	3.1		85	58	3.6	37.967	GKR05-2M □□□071C31	60
	66	76	1.1		81	62	1.3	40.000	GKR04-2M □□□071C31	60
	61	82	2.9		75	67	3.5	43.267	GKR05-2M □□□071C31	60
	57	87	1.0		70	71	1.2	46.000	GKR04-2M □□□071C31	60
	54	93	2.6		66	76	3.1	49.133	GKR05-2M □□□071C31	60
	50	100	2.4		62	81	2.9	52.510	GKR05-2M □□□071C31	60
	48	103	3.5		59	84	4.2	54.513	GKR06-2M □□□071C31	60
	44	113	2.1		54	92	2.5	59.630	GKR05-2M □□□071C31	60
	42	119	2.8		52	96	3.4	62.500	GKR06-2M □□□071C31	60
	39	127	1.4		48	103	1.7	67.112	GKR05-2M □□□071C31	60
	38	131	2.8		47	106	3.4	68.906	GKR06-2M □□□071C31	60
	35	145	1.4		43	117	1.7	76.213	GKR05-2M □□□071C31	60

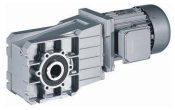

Selection tables

50 Hz, 60 Hz: P_N = 0.55 kW

n_N	1405 r/min				1720 r/min			i		
f_N	50 Hz				60 Hz					
	n_2 [r/min]	M_2 [Nm]	c		n_2 [r/min]	M_2 [Nm]	c			
	394	13	5.1		482	10	6.0	3.565	GKR05-2M □□□071C42	60
	271	18	3.7		329	15	4.4	5.185	GKR04-2M □□□071C42	60
	260	19	2.0		315	16	2.4	5.411	GKR03-2M □□□071C42	60
	236	21	3.4		286	17	4.0	5.963	GKR04-2M □□□071C42	60
	226	22	1.8		274	18	2.1	6.222	GKR03-2M □□□071C42	60
	225	22	4.5		273	18	5.3	6.257	GKR05-2M □□□071C42	60
	198	25	1.7		240	21	2.0	7.111	GKR03-2M □□□071C42	60
	198	25	3.1		240	21	3.6	7.111	GKR04-2M □□□071C42	60
	172	29	1.5		209	24	1.8	8.178	GKR03-2M □□□071C42	60
	172	29	2.8		209	24	3.3	8.178	GKR04-2M □□□071C42	60
	154	32	1.4		187	26	1.6	9.101	GKR03-2M □□□071C42	60
	154	32	2.6		187	26	3.1	9.101	GKR04-2M □□□071C42	60
	134	37	1.2		163	30	1.4	10.466	GKR03-2M □□□071C42	60
	134	37	2.4		163	30	2.8	10.466	GKR04-2M □□□071C42	60
	123	41	2.2		149	33	2.6	11.449	GKR04-2M □□□071C42	60
	121	41	1.1		147	34	1.3	11.640	GKR03-2M □□□071C42	60
	111	45	2.0		134	37	2.3	12.698	GKR04-2M □□□071C42	60
	106	47	4.5		129	38	5.3	13.216	GKR05-2M □□□071C42	60
	105	48	0.9		127	39	1.1	13.386	GKR03-2M □□□071C42	60
	96	52	1.7		117	42	2.0	14.603	GKR04-2M □□□071C42	60
	94	53	4.2		114	44	4.9	15.008	GKR05-2M □□□071C42	60
	93	54	0.8		113	44	1.0	15.111	GKR03-2M □□□071C42	60
	90	55	1.6		110	45	1.9	15.556	GKR04-2M □□□071C42	60
					99	50	0.9	17.378	GKR03-2M □□□071C42	60
	79	64	1.4		95	52	1.7	17.889	GKR04-2M □□□071C42	60
	72	69	1.3		87	57	1.5	19.556	GKR04-2M □□□071C42	60
	63	80	1.1		76	65	1.3	22.489	GKR04-2M □□□071C42	60
	60	83	2.9		73	68	3.4	23.450	GKR05-2M □□□071C42	60
	56	89	1.0		68	73	1.2	25.185	GKR04-2M □□□071C42	60
	52	95	2.5		63	78	3.1	26.878	GKR05-2M □□□071C42	60
	49	103	0.9		59	84	1.1	28.963	GKR04-2M □□□071C42	60
	46	108	2.2		56	89	2.7	30.522	GKR05-2M □□□071C42	60
	45	112	3.2		54	91	3.9	31.481	GKR06-2M □□□071C42	60
	42	119	2.0		51	97	2.5	33.433	GKR05-2M □□□071C42	60
	41	123	3.2		49	101	3.9	34.708	GKR06-2M □□□071C42	60
	37	135	1.8		45	110	2.2	37.967	GKR05-2M □□□071C42	60
	35	145	2.9		42	118	3.5	40.741	GKR06-2M □□□071C42	60
	33	154	1.6		39	126	1.9	43.267	GKR05-2M □□□071C42	60
	31	160	2.8		38	130	3.5	44.917	GKR06-2M □□□071C42	60
	29	174	1.4		35	143	1.7	49.133	GKR05-2M □□□071C42	60

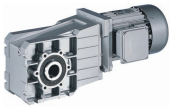

Selection tables

50 Hz, 60 Hz: P_N = 0.55 kW

n_N	1405 r/min				1720 r/min			i		
f_N	50 Hz				60 Hz					
	n_2 [r/min]	M_2 [Nm]	c		n_2 [r/min]	M_2 [Nm]	c			
	28	176	2.4		35	143	2.9	49.444	GKR06-2M □□□071C42	60
	27	186	1.3		33	152	1.6	52.510	GKR05-2M □□□071C42	60
	26	194	2.3		32	158	2.8	54.513	GKR06-2M □□□071C42	60
	24	212	1.1		29	173	1.4	59.630	GKR05-2M □□□071C42	60
	23	222	1.4		27	181	1.7	62.500	GKR06-2M □□□071C42	60
	20	245	1.4		25	200	1.7	68.906	GKR06-2M □□□071C42	60

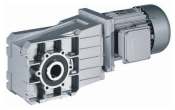

Selection tables

50 Hz, 60 Hz: P_N = 0.55 kW

n_N	930 r/min				1140 r/min			i		
f_N	50 Hz				60 Hz					
	n_2 [r/min]	M_2 [Nm]	c		n_2 [r/min]	M_2 [Nm]	c			
	261	19	4.2		320	16	5.2	3.565	GKR05-2M □□□080C33	60
	179	28	2.5		218	23	3.0	5.185	GKR04-2M □□□080C33	60
	156	32	2.3		190	26	2.8	5.963	GKR04-2M □□□080C33	60
	149	34	3.7		181	27	4.6	6.257	GKR05-2M □□□080C33	60
	131	38	2.0		159	31	2.5	7.111	GKR04-2M □□□080C33	60
	114	44	1.8		138	36	2.3	8.178	GKR04-2M □□□080C33	60
	102	49	1.7		124	40	2.1	9.101	GKR04-2M □□□080C33	60
	89	56	1.6		108	46	1.9	10.466	GKR04-2M □□□080C33	60
	81	61	1.5		99	50	1.8	11.449	GKR04-2M □□□080C33	60
	77	65	3.2		94	53	3.9	12.081	GKR05-2M □□□080C33	60
	73	68	1.3		89	56	1.6	12.698	GKR04-2M □□□080C33	60
	70	71	3.0		86	58	3.7	13.216	GKR05-2M □□□080C33	60
	68	74	2.9		82	60	3.6	13.719	GKR05-2M □□□080C33	60
	64	78	1.1		77	64	1.4	14.603	GKR04-2M □□□080C33	60
	62	81	2.8		75	66	3.4	15.008	GKR05-2M □□□080C33	60
	60	83	1.1		73	68	1.3	15.556	GKR04-2M □□□080C33	60
	55	90	2.7		67	74	3.3	16.857	GKR05-2M □□□080C33	60
	52	96	0.9		63	78	1.1	17.889	GKR04-2M □□□080C33	60
	49	103	2.3		59	84	2.9	19.143	GKR05-2M □□□080C33	60
	48	105	0.9		58	86	1.1	19.556	GKR04-2M □□□080C33	60
	45	111	2.2		55	90	2.7	20.650	GKR05-2M □□□080C33	60
	40	126	1.9		48	103	2.3	23.450	GKR05-2M □□□080C33	60
	37	136	3.1		45	111	3.8	25.309	GKR06-2M □□□080C33	60
	35	144	1.7		42	118	2.0	26.878	GKR05-2M □□□080C33	60
	33	150	3.0		41	122	3.7	27.903	GKR06-2M □□□080C33	60
	31	164	1.5		37	134	1.8	30.522	GKR05-2M □□□080C33	60
	30	169	2.6		36	138	3.2	31.481	GKR06-2M □□□080C33	60
	28	179	1.3		34	146	1.6	33.433	GKR05-2M □□□080C33	60
	27	186	2.4		33	152	3.0	34.708	GKR06-2M □□□080C33	60
	25	204	1.2		30	166	1.4	37.967	GKR05-2M □□□080C33	60
	23	219	2.1		28	178	2.5	40.741	GKR06-2M □□□080C33	60
	22	232	1.0		26	189	1.3	43.267	GKR05-2M □□□080C33	60
	21	241	1.9		25	197	2.3	44.917	GKR06-2M □□□080C33	60
	19	264	0.9		23	215	1.1	49.133	GKR05-2M □□□080C33	60
	19	265	1.7		23	216	2.1	49.444	GKR06-2M □□□080C33	60
	18	282	0.9		22	230	1.0	52.510	GKR05-2M □□□080C33	60
	17	292	1.5		21	239	1.9	54.513	GKR06-2M □□□080C33	60
	15	335	1.1		18	274	1.4	62.500	GKR06-2M □□□080C33	60
	14	370	1.1		16	302	1.4	68.906	GKR06-2M □□□080C33	60

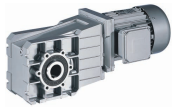

Selection tables

50 Hz, 60 Hz: P_N = 0.75 kW

n_N	1410 r/min				1720 r/min			i		
f_N	50 Hz				60 Hz					
	n_2 [r/min]	M_2 [Nm]	c		n_2 [r/min]	M_2 [Nm]	c			
	396	17	4.7		482	14	5.5	3.565	GKR05-2M □□□080C32	62
	272	25	2.8		330	21	3.2	5.185	GKR04-2M □□□080C32	62
	237	29	2.5		287	24	2.9	5.963	GKR04-2M □□□080C32	62
	225	30	4.1		273	25	4.8	6.257	GKR05-2M □□□080C32	62
	198	34	2.3		241	28	2.6	7.111	GKR04-2M □□□080C32	62
	172	39	2.1		209	32	2.4	8.178	GKR04-2M □□□080C32	62
	155	44	1.9		188	36	2.2	9.101	GKR04-2M □□□080C32	62
	135	51	1.8		163	41	2.0	10.466	GKR04-2M □□□080C32	62
	123	55	1.6		149	45	1.9	11.449	GKR04-2M □□□080C32	62
	111	61	1.5		135	50	1.7	12.698	GKR04-2M □□□080C32	62
	107	64	3.4		129	52	3.9	13.216	GKR05-2M □□□080C32	62
	97	70	1.3		117	58	1.5	14.603	GKR04-2M □□□080C32	62
	94	72	3.1		114	59	3.6	15.008	GKR05-2M □□□080C32	62
	91	75	1.2		110	62	1.4	15.556	GKR04-2M □□□080C32	62
	84	81	3.0		101	67	3.4	16.857	GKR05-2M □□□080C32	62
	79	86	1.0		96	71	1.2	17.889	GKR04-2M □□□080C32	62
	74	92	2.6		89	76	3.0	19.143	GKR05-2M □□□080C32	62
	72	94	1.0		87	77	1.1	19.556	GKR04-2M □□□080C32	62
	68	100	2.4		83	82	2.8	20.650	GKR05-2M □□□080C32	62
	63	109	0.8		76	89	1.0	22.489	GKR04-2M □□□080C32	62
	60	113	2.1		73	93	2.5	23.450	GKR05-2M □□□080C32	62
	53	130	1.9		64	106	2.3	26.878	GKR05-2M □□□080C32	62
	51	135	3.3		61	110	4.1	27.903	GKR06-2M □□□080C32	62
	46	147	1.6		56	121	2.0	30.522	GKR05-2M □□□080C32	62
	45	152	2.9		54	125	3.5	31.481	GKR06-2M □□□080C32	62
	42	161	1.5		51	132	1.8	33.433	GKR05-2M □□□080C32	62
	41	167	2.7		49	137	3.3	34.708	GKR06-2M □□□080C32	62
	37	183	1.3		45	150	1.6	37.967	GKR05-2M □□□080C32	62
	35	197	2.3		42	161	2.8	40.741	GKR06-2M □□□080C32	62
	33	209	1.1		40	171	1.4	43.267	GKR05-2M □□□080C32	62
	31	217	2.1		38	178	2.5	44.917	GKR06-2M □□□080C32	62
	29	237	1.0		35	194	1.2	49.133	GKR05-2M □□□080C32	62
	29	239	1.9		35	196	2.3	49.444	GKR06-2M □□□080C32	62
	27	253	0.9		33	208	1.2	52.510	GKR05-2M □□□080C32	62
	26	263	1.7		32	216	2.1	54.513	GKR06-2M □□□080C32	62
	24	288	0.8		29	236	1.0	59.630	GKR05-2M □□□080C32	62
	23	302	1.3		27	247	1.5	62.500	GKR06-2M □□□080C32	62
	21	333	1.3		25	273	1.5	68.906	GKR06-2M □□□080C32	62

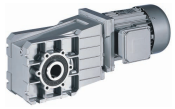

Selection tables

50 Hz, 60 Hz: P_N = 1.1 kW

n_N	1430 r/min				1740 r/min			i		
f_N	50 Hz				60 Hz					
	n_2 [r/min]	M_2 [Nm]	c		n_2 [r/min]	M_2 [Nm]	c			
	401	25	5.5		485	20	6.4	3.565	GKR05-2M □□□090C12	62
	276	36	1.9		334	30	2.2	5.185	GKR04-2M □□□090C12	62
	240	42	1.7		290	34	2.0	5.963	GKR04-2M □□□090C12	62
	229	44	3.6		277	36	4.1	6.257	GKR05-2M □□□090C12	62
	201	50	1.6		243	41	1.8	7.111	GKR04-2M □□□090C12	62
	175	57	1.4		212	47	1.6	8.178	GKR04-2M □□□090C12	62
	157	64	1.3		190	52	1.5	9.101	GKR04-2M □□□090C12	62
	152	66	2.9		183	54	3.4	9.440	GKR05-2M □□□090C12	62
	137	73	1.2		165	60	1.4	10.466	GKR04-2M □□□090C12	62
	133	75	2.7		161	61	3.2	10.720	GKR05-2M □□□090C12	62
	125	80	1.1		151	66	1.3	11.449	GKR04-2M □□□090C12	62
	118	84	2.5		143	69	2.9	12.081	GKR05-2M □□□090C12	62
	113	89	1.0		136	73	1.2	12.698	GKR04-2M □□□090C12	62
	108	92	2.3		131	76	2.7	13.216	GKR05-2M □□□090C12	62
	104	96	2.3		126	79	2.6	13.719	GKR05-2M □□□090C12	62
	98	102	0.9		119	84	1.0	14.603	GKR04-2M □□□090C12	62
	95	105	2.1		115	86	2.5	15.008	GKR05-2M □□□090C12	62
	92	109	0.8		112	89	1.0	15.556	GKR04-2M □□□090C12	62
	85	118	2.0		103	97	2.4	16.857	GKR05-2M □□□090C12	62
	75	134	1.8		90	110	2.1	19.143	GKR05-2M □□□090C12	62
	69	144	1.7		84	118	1.9	20.650	GKR05-2M □□□090C12	62
	67	150	3.0		81	123	3.5	21.438	GKR06-2M □□□090C12	62
	61	164	1.5		74	134	1.7	23.450	GKR05-2M □□□090C12	62
	57	177	2.5		68	145	3.1	25.309	GKR06-2M □□□090C12	62
	53	188	1.3		64	154	1.6	26.878	GKR05-2M □□□090C12	62
	51	195	2.3		62	160	2.8	27.903	GKR06-2M □□□090C12	62
	47	213	1.1		57	175	1.4	30.522	GKR05-2M □□□090C12	62
	45	220	2.0		55	181	2.5	31.481	GKR06-2M □□□090C12	62
	43	233	1.0		52	192	1.3	33.433	GKR05-2M □□□090C12	62
	41	242	1.9		50	199	2.3	34.708	GKR06-2M □□□090C12	62
	38	265	0.9		46	218	1.1	37.967	GKR05-2M □□□090C12	62
	35	284	1.6		43	234	1.9	40.741	GKR06-2M □□□090C12	62
	32	313	1.4		39	258	1.7	44.917	GKR06-2M □□□090C12	62
	29	345	1.3		35	284	1.6	49.444	GKR06-2M □□□090C12	62
	26	380	1.2		32	313	1.4	54.513	GKR06-2M □□□090C12	62

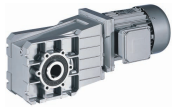

Selection tables

50 Hz, 60 Hz: P_N = 1.5 kW

n_N	1435 r/min				1745 r/min			i		
f_N	50 Hz				60 Hz					
	n_2 [r/min]	M_2 [Nm]	c		n_2 [r/min]	M_2 [Nm]	c			
	403	34	4.1		487	28	4.7	3.565	GKR05-2M □□□090C32	62
	294	46	3.2		355	38	3.7	4.889	GKR05-2M □□□090C32	62
	277	49	1.4		335	40	1.6	5.185	GKR04-2M □□□090C32	62
	241	57	1.3		291	47	1.5	5.963	GKR04-2M □□□090C32	62
	229	59	2.6		277	49	3.0	6.257	GKR05-2M □□□090C32	62
	209	65	2.7		252	54	3.2	6.883	GKR05-2M □□□090C32	62
	202	67	1.1		244	55	1.3	7.111	GKR04-2M □□□090C32	62
	184	74	2.5		222	61	2.9	7.817	GKR05-2M □□□090C32	62
	176	78	1.0		212	64	1.2	8.178	GKR04-2M □□□090C32	62
	158	86	1.0		191	71	1.1	9.101	GKR04-2M □□□090C32	62
	152	90	2.1		184	74	2.5	9.440	GKR05-2M □□□090C32	62
	137	99	0.9		166	82	1.0	10.466	GKR04-2M □□□090C32	62
	134	102	2.0		162	84	2.3	10.720	GKR05-2M □□□090C32	62
	125	109	0.8		152	89	1.0	11.449	GKR04-2M □□□090C32	62
	119	115	1.8		144	94	2.1	12.081	GKR05-2M □□□090C32	62
	109	125	1.7		131	103	2.0	13.216	GKR05-2M □□□090C32	62
	105	130	1.7		127	107	1.9	13.719	GKR05-2M □□□090C32	62
	96	142	1.6		116	117	1.8	15.008	GKR05-2M □□□090C32	62
	90	151	3.0		109	124	3.5	15.873	GKR06-2M □□□090C32	62
	85	160	1.5		103	131	1.7	16.857	GKR05-2M □□□090C32	62
	82	166	2.7		99	136	3.1	17.500	GKR06-2M □□□090C32	62
	75	182	1.3		91	149	1.5	19.143	GKR05-2M □□□090C32	62
	74	184	2.4		89	152	2.8	19.444	GKR06-2M □□□090C32	62
	70	196	1.2		84	161	1.4	20.650	GKR05-2M □□□090C32	62
	67	203	2.2		81	167	2.6	21.438	GKR06-2M □□□090C32	62
	61	222	1.1		74	183	1.2	23.450	GKR05-2M □□□090C32	62
	57	240	1.9		69	197	2.3	25.309	GKR06-2M □□□090C32	62
	53	255	0.9		65	210	1.1	26.878	GKR05-2M □□□090C32	62
	51	265	1.7		62	218	2.1	27.903	GKR06-2M □□□090C32	62
	47	289	0.8		57	238	1.0	30.522	GKR05-2M □□□090C32	62
	46	299	1.5		55	246	1.8	31.481	GKR06-2M □□□090C32	62
	41	329	1.4		50	271	1.7	34.708	GKR06-2M □□□090C32	62
	35	386	1.2		43	318	1.4	40.741	GKR06-2M □□□090C32	62
	32	426	1.1		39	350	1.3	44.917	GKR06-2M □□□090C32	62
	29	469	1.0		35	386	1.2	49.444	GKR06-2M □□□090C32	62
	26	517	0.9		32	425	1.1	54.513	GKR06-2M □□□090C32	62

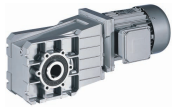

Selection tables

50 Hz, 60 Hz: P_N = 2.2 kW

n_N	1445 r/min				1750 r/min			i		
f_N	50 Hz				60 Hz					
	n_2 [r/min]	M_2 [Nm]	c		n_2 [r/min]	M_2 [Nm]	c			
	405	49	2.8		490	41	3.2	3.565	GKR05-2M □□□100C12	62
	296	68	2.2		357	56	2.5	4.889	GKR05-2M □□□100C12	62
	231	86	1.8		279	71	2.1	6.257	GKR05-2M □□□100C12	62
	210	95	1.9		254	79	2.2	6.883	GKR05-2M □□□100C12	62
	185	108	1.7		223	89	2.0	7.817	GKR05-2M □□□100C12	62
	153	130	1.5		185	108	1.7	9.440	GKR05-2M □□□100C12	62
	147	135	2.8		178	112	3.3	9.800	GKR06-2M □□□100C12	62
	135	148	1.4		163	122	1.6	10.720	GKR05-2M □□□100C12	62
	127	157	2.8		153	130	3.2	11.376	GKR06-2M □□□100C12	62
	120	167	1.2		144	138	1.4	12.081	GKR05-2M □□□100C12	62
	116	172	2.6		140	142	3.0	12.444	GKR06-2M □□□100C12	62
	109	183	1.2		132	151	1.3	13.216	GKR05-2M □□□100C12	62
	105	189	1.1		127	156	1.3	13.719	GKR05-2M □□□100C12	62
	105	190	2.2		127	156	2.6	13.720	GKR06-2M □□□100C12	62
	96	207	1.1		116	171	1.2	15.008	GKR05-2M □□□100C12	62
	91	219	2.1		110	181	2.4	15.873	GKR06-2M □□□100C12	62
	86	233	1.0		104	192	1.2	16.857	GKR05-2M □□□100C12	62
	83	242	1.9		100	200	2.1	17.500	GKR06-2M □□□100C12	62
	76	264	0.9		91	218	1.0	19.143	GKR05-2M □□□100C12	62
	74	269	1.7		90	222	1.9	19.444	GKR06-2M □□□100C12	62
	70	285	0.8		85	236	1.0	20.650	GKR05-2M □□□100C12	62
	67	296	1.5		81	244	1.7	21.438	GKR06-2M □□□100C12	62
	57	350	1.3		69	289	1.6	25.309	GKR06-2M □□□100C12	62
	52	385	1.2		63	318	1.4	27.903	GKR06-2M □□□100C12	62
	46	435	1.0		55	359	1.3	31.481	GKR06-2M □□□100C12	62
	42	479	0.9		50	396	1.1	34.708	GKR06-2M □□□100C12	62

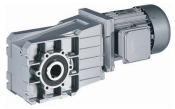

Selection tables

50 Hz, 60 Hz: P_N = 3.0 kW

n_N	1445 r/min				1755 r/min			i		
f_N	50 Hz				60 Hz					
	n_2 [r/min]	M_2 [Nm]	c		n_2 [r/min]	M_2 [Nm]	c			
	421	65	3.1		509	53	3.6	3.431	GKR06-2M □□□100C32	62
	405	67	2.1		490	55	2.4	3.565	GKR05-2M □□□100C32	62
	307	89	2.8		371	73	3.3	4.706	GKR06-2M □□□100C32	62
	296	92	1.6		357	76	1.8	4.889	GKR05-2M □□□100C32	62
	240	113	2.5		290	93	2.8	6.022	GKR06-2M □□□100C32	62
	231	118	1.3		279	97	1.5	6.257	GKR05-2M □□□100C32	62
	223	122	2.9		269	101	3.3	6.481	GKR06-2M □□□100C32	62
	210	130	1.4		254	107	1.6	6.883	GKR05-2M □□□100C32	62
	202	135	2.6		244	111	3.0	7.146	GKR06-2M □□□100C32	62
	185	147	1.3		223	121	1.5	7.817	GKR05-2M □□□100C32	62
	163	167	2.4		196	138	2.8	8.889	GKR06-2M □□□100C32	62
	153	178	1.1		185	146	1.2	9.440	GKR05-2M □□□100C32	62
	147	185	2.1		178	152	2.4	9.800	GKR06-2M □□□100C32	62
	135	202	1.0		163	166	1.2	10.720	GKR05-2M □□□100C32	62
	127	214	2.0		153	176	2.3	11.376	GKR06-2M □□□100C32	62
	120	228	0.9		144	187	1.1	12.081	GKR05-2M □□□100C32	62
	116	234	1.9		140	193	2.2	12.444	GKR06-2M □□□100C32	62
	109	249	0.9		132	205	1.0	13.216	GKR05-2M □□□100C32	62
	105	258	0.8		128	213	1.0	13.719	GKR05-2M □□□100C32	62
	105	258	1.6		127	213	1.9	13.720	GKR06-2M □□□100C32	62
	91	299	1.5		110	246	1.7	15.873	GKR06-2M □□□100C32	62
	83	330	1.4		100	271	1.6	17.500	GKR06-2M □□□100C32	62
	74	366	1.2		90	302	1.4	19.444	GKR06-2M □□□100C32	62
	67	404	1.1		81	332	1.3	21.438	GKR06-2M □□□100C32	62
	57	477	0.9		69	392	1.1	25.309	GKR06-2M □□□100C32	62
	52	526	0.9		63	433	1.0	27.903	GKR06-2M □□□100C32	62

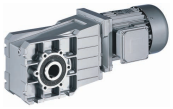

Selection tables

50 Hz, 60 Hz: P_N = 4.0 kW

n_N	1455 r/min				1760 r/min			i		
f_N	50 Hz				60 Hz					
	n_2 [r/min]	M_2 [Nm]	c		n_2 [r/min]	M_2 [Nm]	c			
	424	86	2.3		512	71	2.7	3.431	GKR06-2M □□□112C22	62
	309	117	2.1		373	97	2.4	4.706	GKR06-2M □□□112C22	62
	242	150	1.9		291	124	2.1	6.022	GKR06-2M □□□112C22	62
	225	162	2.2		271	134	2.5	6.481	GKR06-2M □□□112C22	62
	204	178	2.0		246	147	2.2	7.146	GKR06-2M □□□112C22	62
	164	222	1.8		197	183	2.1	8.889	GKR06-2M □□□112C22	62
	149	244	1.6		179	202	1.8	9.800	GKR06-2M □□□112C22	62
	128	284	1.5		154	235	1.8	11.376	GKR06-2M □□□112C22	62
	117	310	1.4		141	257	1.7	12.444	GKR06-2M □□□112C22	62
	106	342	1.2		128	283	1.4	13.720	GKR06-2M □□□112C22	62
	92	396	1.1		111	327	1.3	15.873	GKR06-2M □□□112C22	62
	83	436	1.0		100	361	1.2	17.500	GKR06-2M □□□112C22	62
	75	485	0.9		90	401	1.1	19.444	GKR06-2M □□□112C22	62
	68	535	0.8		82	442	1.0	21.438	GKR06-2M □□□112C22	62

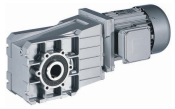

Selection tables

50 Hz, 60 Hz: P_N = 5.5 kW

n_N	1470 r/min				1775 r/min			i		
f_N	50 Hz				60 Hz					
	n_2 [r/min]	M_2 [Nm]	c		n_2 [r/min]	M_2 [Nm]	c			
	428	116	1.7		516	96	2.0	3.431	GKR06-2M□□□132C12	62
	312	160	1.6		376	132	1.8	4.706	GKR06-2M□□□132C12	62
	244	204	1.4		294	169	1.6	6.022	GKR06-2M□□□132C12	62
	227	220	1.6		273	182	1.8	6.481	GKR06-2M□□□132C12	62
	206	243	1.4		248	201	1.6	7.146	GKR06-2M□□□132C12	62
	165	302	1.4		199	250	1.5	8.889	GKR06-2M□□□132C12	62
	150	333	1.2		181	275	1.3	9.800	GKR06-2M□□□132C12	62
	129	386	1.1		156	320	1.3	11.376	GKR06-2M□□□132C12	62
	118	422	1.1		142	350	1.2	12.444	GKR06-2M□□□132C12	62
	107	466	0.9		129	386	1.0	13.720	GKR06-2M□□□132C12	62
	93	539	0.8		112	446	1.0	15.873	GKR06-2M□□□132C12	62

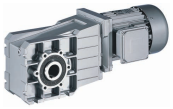

Selection tables

50 Hz, 60 Hz: P_N = 7.5 kW

n_N	1460 r/min				1765 r/min			i		
f_N	50 Hz				60 Hz					
	n_2 [r/min]	M_2 [Nm]	c		n_2 [r/min]	M_2 [Nm]	c			
	426	160	1.3		513	132	1.4	3.431	GKR06-2M□□□132C22	62
	310	219	1.1		374	181	1.3	4.706	GKR06-2M□□□132C22	62
	242	281	1.0		292	232	1.1	6.022	GKR06-2M□□□132C22	62
	225	302	1.2		272	250	1.3	6.481	GKR06-2M□□□132C22	62
	204	333	1.0		246	275	1.2	7.146	GKR06-2M□□□132C22	62
	164	414	1.0		198	343	1.1	8.889	GKR06-2M□□□132C22	62
	149	457	0.8		180	378	1.0	9.800	GKR06-2M□□□132C22	62
	128	530	0.8		155	439	0.9	11.376	GKR06-2M□□□132C22	62

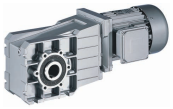

Dimensions

GKR□□-2M H□R

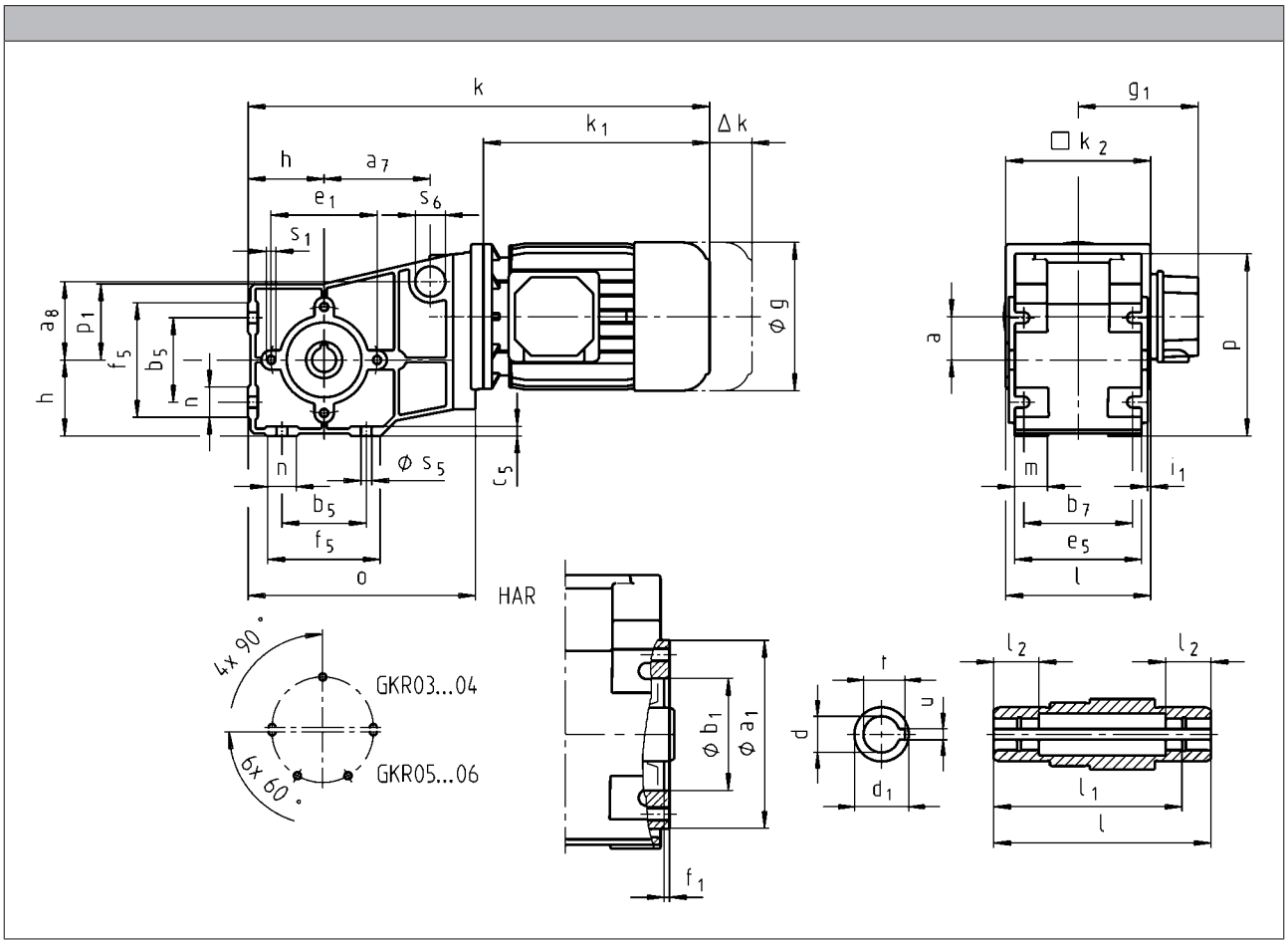

		063C02	063C11	063C12	063C22	063C31	063C32
g		123					
g_1	MDEMAXX MDSMAXX	100					
	MDEMABR MDSMABR	107					
k_1	MDEMAXX MDSMAXX	156	187		156	187	
k_2		100	120		100	120	
Δ k	MDEMABR MDSMABR	71	40		71	40	
	MDFMAXX		128			128	
	MDFMABR		170			170	
		k					
GKR03		301		332	301		332
GKR04			383			383	

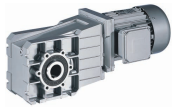

		063C42	071C11 071C13 071C31	071C32	071C33	071C42	080C13 080C33
g		123	139				156
g_1	MDEMAXX MDSMAXX	100	109				150
	MDEMABR MDSMABR	107	118				132
k_1	MDEMAXX MDSMAXX	187	207				224.5
k_2		120					145
Δ k	MDEMABR MDSMABR	40	52				73
	MDFMAXX	128					
	MDFMABR	170	165				183
		k					
GKR03		332		352		352	
GKR04		383	403				425
GKR05		436	456				479
GKR06		488	508				530

	a	a_7	a_8	h	o	p[1]	p_1	s_6
GKR03	29	66	39	50	142	117	48	25
GKR04	36	88	65	63	189	151	63	25
GKR05	40			80	250.5	181	82	
GKR06	51			100	307	226	100	

	d[2]	d_1	l[1]	l_1	l_2	u	t[3]	i_1	a_1	b_1	e_1	f_1	s_1
	H7					JS9	+0,2			J7			
GKR03	18 20	30 30	100 100	85 85	22 22	6 6	20.8 22.8	2.5 2.5	85	55	70	2.5	M6x12
GKR04	20 25	30 35	120 120	105 105	25 25	6 8	22.8 27	2.5 2.5	104	62	88	3	M8x16
GKR05	30 35	50 50	143 143	127 127	25 25	8 10	33.3 38.3	4 4	116	80	100	4	M8x15
GKR06	40 45	65 65	170 170	150 150	30 30	12 14	43.3 48.8	5 5	140	100	120	4	M10x22

	b_5	b_7	c_5	e_5	f_5	m	n	s_5
GKR03	60	75	7	90	80	22	20	6.6
GKR04	70	90	8	105	95	28	25	9
GKR05	100	100	11	115	138	27	48	9
GKR06	120	125	12	145	164	32	53	11

[1] k_2 !
[2] l_2 !
[3] d = 25 mm > DIN 6885/3

Dimensions

GKR□□-2M H□R

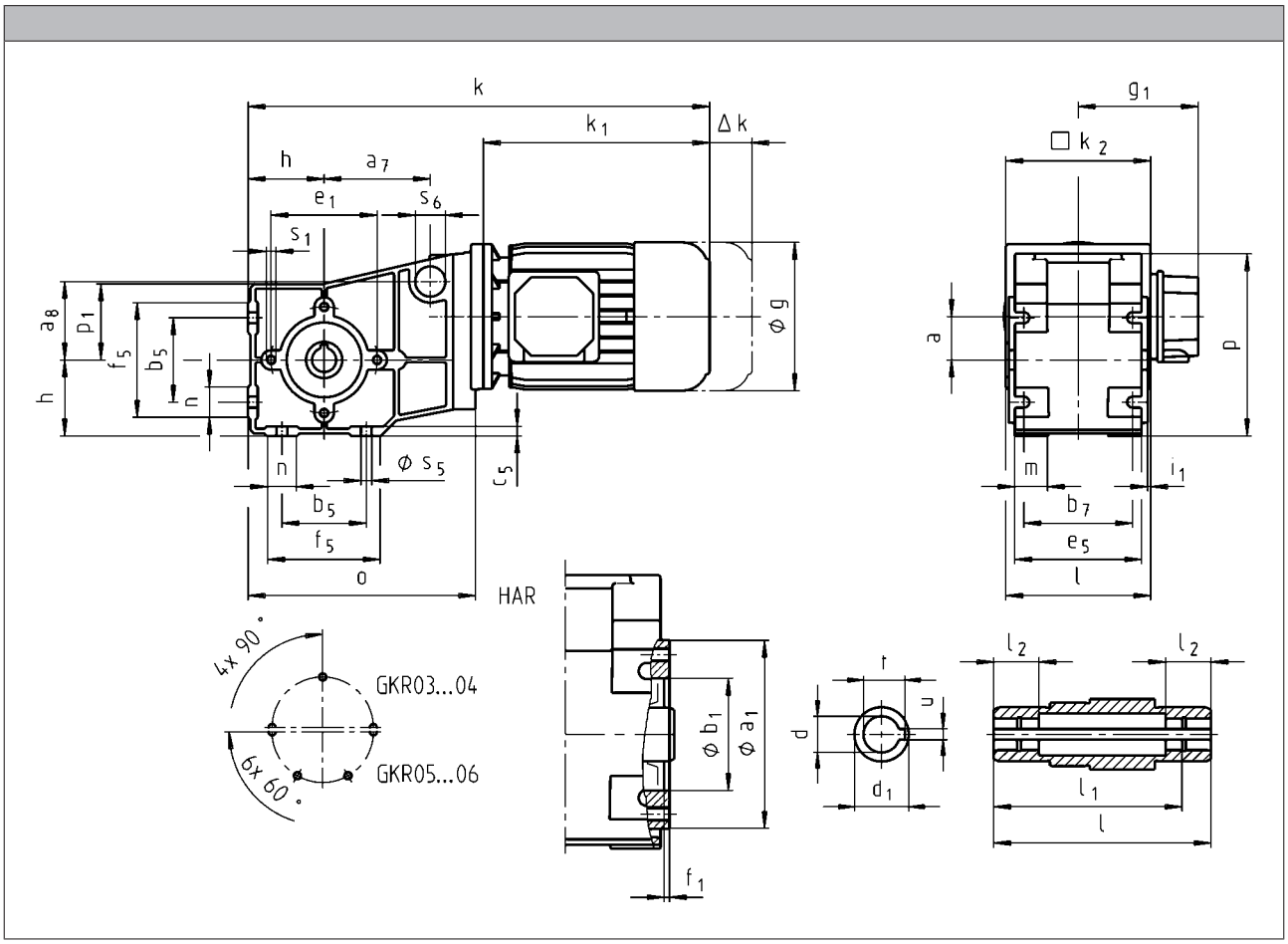

GKR bevel gearboxes

Technical data

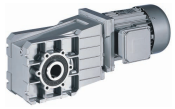

		080C32	090C12	090C32	100C12	100C32	112C22	132C12 132C22
g		156	176		194		218	258
g_1	MHEMAXX	150	152	157	166		176	195
	MHEMABR	132	137		147		158	187
k_1	MHEMAXX	224.5	274		309	324	363	403
k_2		145	180				222	265
Δ k	MHEMABR	73	68		76		90	109.5
	MHFMAXX		128		109		102	115
	MHFMABR	183	181		170		183	201.5
		k						
	GKR04	425	485					
	GKR05	479	538		573	588		
	GKR06	530	590		625	640	685	733

	a	a_7	a_8	h	o	p[1]	p_1	s_6
GKR04	36	88	65	63	189	151	63	25
GKR05	40			80	250.5	181	82	
GKR06	51			100	307	226	100	

	d[2]	d_1	l[1]	l_1	l_2	u	t[3]	i_1	a_1	b_1	e_1	f_1	s_1
	H7					JS9	+0,2			J7			
GKR04	20 25	30 35	120 120	105 105	25 25	6 8	22.8 27	2.5 2.5	104	62	88	3	M8x16
GKR05	30 35	50 50	143 143	127 127	25 25	8 10	33.3 38.3	4 4	116	80	100	4	M8x15
GKR06	40 45	65 65	170 170	150 150	30 30	12 14	43.3 48.8	5 5	140	100	120	4	M10x22

	b_5	b_7	c_5	e_5	f_5	m	n	s_5
GKR04	70	90	8	105	95	28	25	9
GKR05	100	100	11	115	138	27	48	9
GKR06	120	125	12	145	164	32	53	11

[1] k_2 !
[2] l_2 !
[3] d = 25 mm > DIN 6885/3

Dimensions

GKR□□-2M HAK

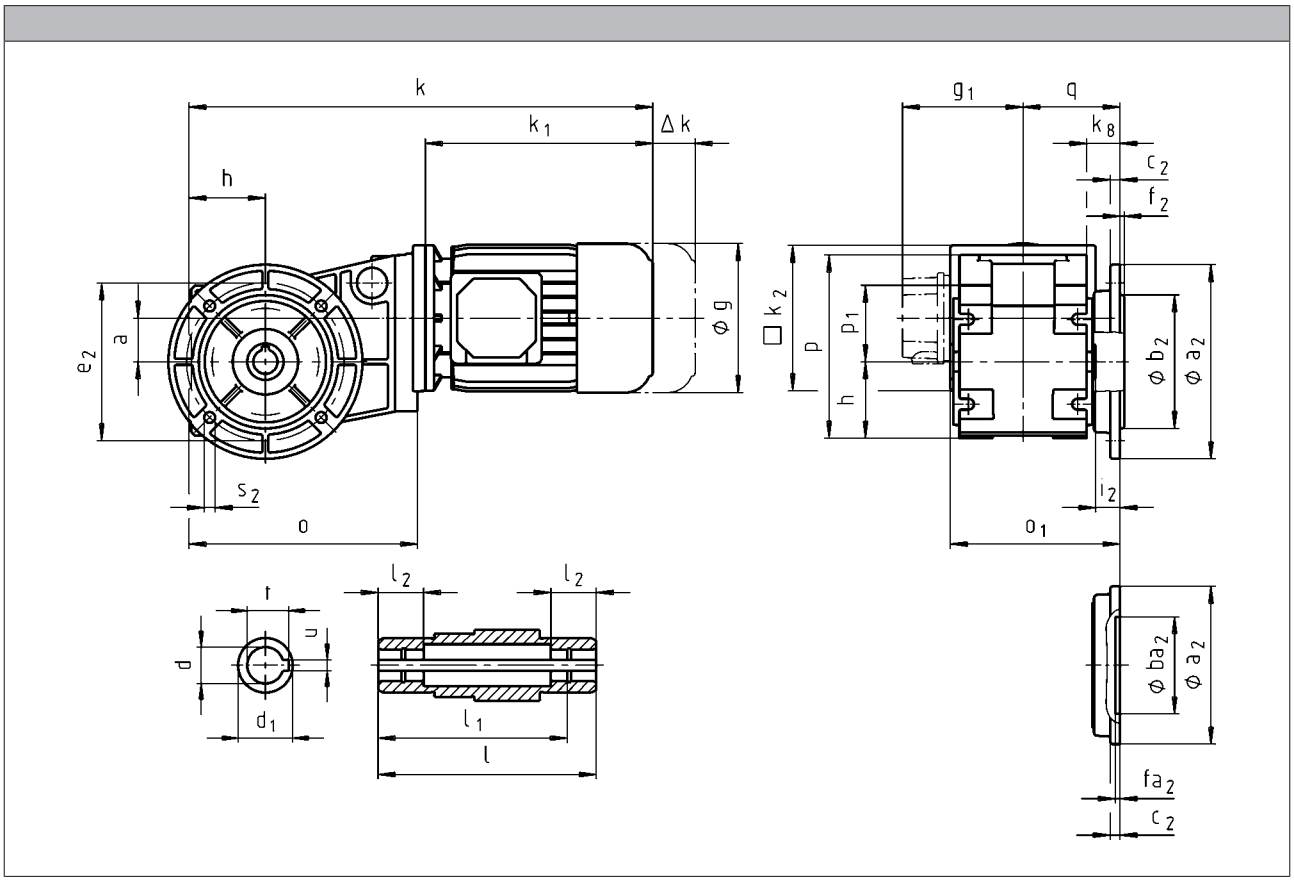

		063C02	063C11	063C12	063C22	063C31	063C32
g		123					
g_1	MDEMAXX MDSMAXX	100					
	MDEMABR MDSMABR	107					
k_1	MDEMAXX MDSMAXX	156	187		156	187	
k_2		100	120		100	120	
Δ k	MDEMABR MDSMABR	71	40		71	40	
	MDFMAXX		128			128	
	MDFMABR		170			170	
		k					
GKR03		301		332	301		332
GKR04			383			383	

GKR bevel gearboxes

Technical data

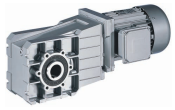

		063C42	071C11 071C13 071C31	071C32	071C33	071C42	080C13 080C33
g		123	139				156
g_1	MDEMAXX MDSMAXX	100	109				150
	MDEMABR MDSMABR	107	118				132
k_1	MDEMAXX MDSMAXX	187	207				224.5
k_2		120					145
Δ k	MDEMABR MDSMABR	40	52				73
	MDFMAXX	128					
	MDFMABR	170	165				183
		k					
GKR03		332		352		352	
GKR04		383	403				425
GKR05		436	456				479
GKR06		488	508				530

	a	h	k_8	o	p[1)]	p_1	q
GKR03	29	50	35	142	117	48	80
GKR04	36	63	28	189	151	63	80
GKR05	40	80	47.5	250.5	181	82	105
GKR06	51	100	54	307	226	100	126.5

	d[2)]	d_1	l	l_1	l_2	u	t[3)]	i_2	o_1[1)]	a_2	b_2	ba_2	c_2	e_2	f_2	fa_2	s_2
	H7					JS9	+0,2				j7	H7					
GKR03	18 20	30 30	100 100	85 85	22 22	6 6	20.8 22.8	30 30	130 130	120 110	80 -	- 60	8 8	100 87	3 -	- 4	7 9
GKR04	20 25	30 35	120 120	105 105	25 25	6 8	22.8 27	20 20	140 140	120 160	80 110		8 8	100 130	3 3.5		7 9
GKR05	30 35	50 50	143 143	127 127	25 25	8 10	33.3 38.3	33.5 33.5	176.5 176.5	160 200	110 130		12 12	130 165	3.5 3.5		9 11
GKR06	40 45	65 65	170 170	150 150	30 30	12 14	43.3 48.8	41.5 41.5	211.5 211.5	200 250	130 180		12 12	165 215	3.5 4		11 14

[1)] k_2 !
[2)] l_2 !
[3)] d = 25 mm > DIN 6885/3

Dimensions

GKR□□-2M HAK

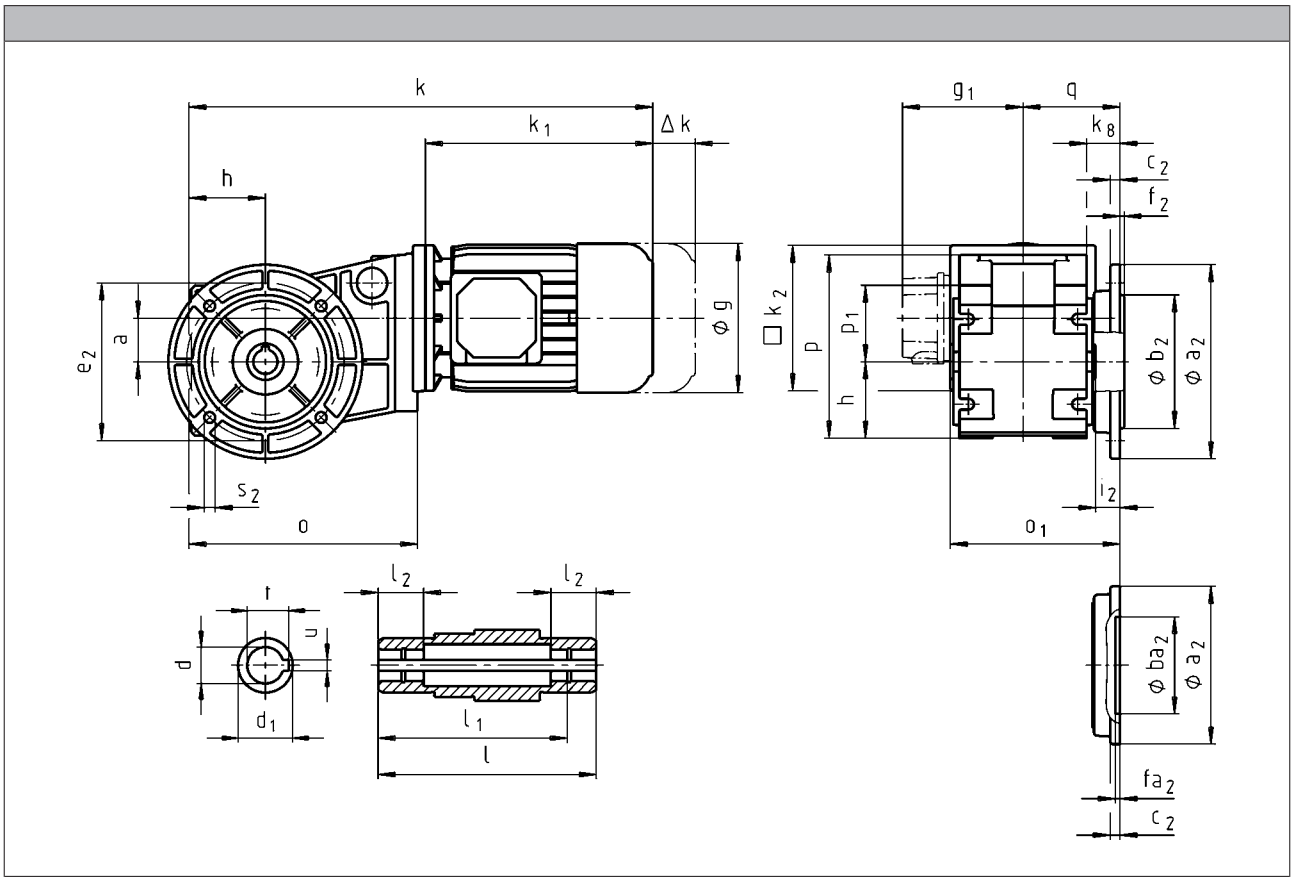

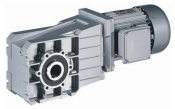

		080C32	090C12	090C32	100C12	100C32	112C22	132C12 132C22
g		156	176		194		218	258
g_1	MHEMAXX	150	152	157	166		176	195
	MHEMABR	132	137		147		158	187
k_1	MHEMAXX	224.5	274		309	324	363	403
k_2		145	180				222	265
Δ k	MHEMABR	73	68		76		90	109.5
	MHFMAXX		128		109		102	115
	MHFMABR	183	181		170		183	201.5
		k						
	GKR04	425	485					
	GKR05	479	538		573	588		
	GKR06	530	590		625	640	685	733

	a	h	k_8	o	p[1]	p_1	q
GKR04	36	63	28	189	151	63	80
GKR05	40	80	47.5	250.5	181	82	105
GKR06	51	100	54	307	226	100	126.5

	d[2]	d_1	l	l_1	l_2	u	t[3]	i_2	o_1[1]	a_2	b_2	c_2	e_2	f_2	s_2
	H7					JS9	+0,2				j7				
GKR04	20 25	30 35	120 120	105 105	25 25	6 8	22.8 27	20 20	140 140	120 160	80 110	8 8	100 130	3 3.5	7 9
GKR05	30 35	50 50	143 143	127 127	25 25	8 10	33.3 38.3	33.5 33.5	176.5 176.5	160 200	110 130	12 12	130 165	3.5 3.5	9 11
GKR06	40 45	65 65	170 170	150 150	30 30	12 14	43.3 48.8	41.5 41.5	211.5 211.5	200 250	130 180	12 12	165 215	3.5 4	11 14

[1] k_2 !
[2] l_2 !
[3] d = 25 mm > DIN 6885/3

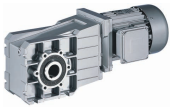

Dimensions

GKR□□-2M V□R

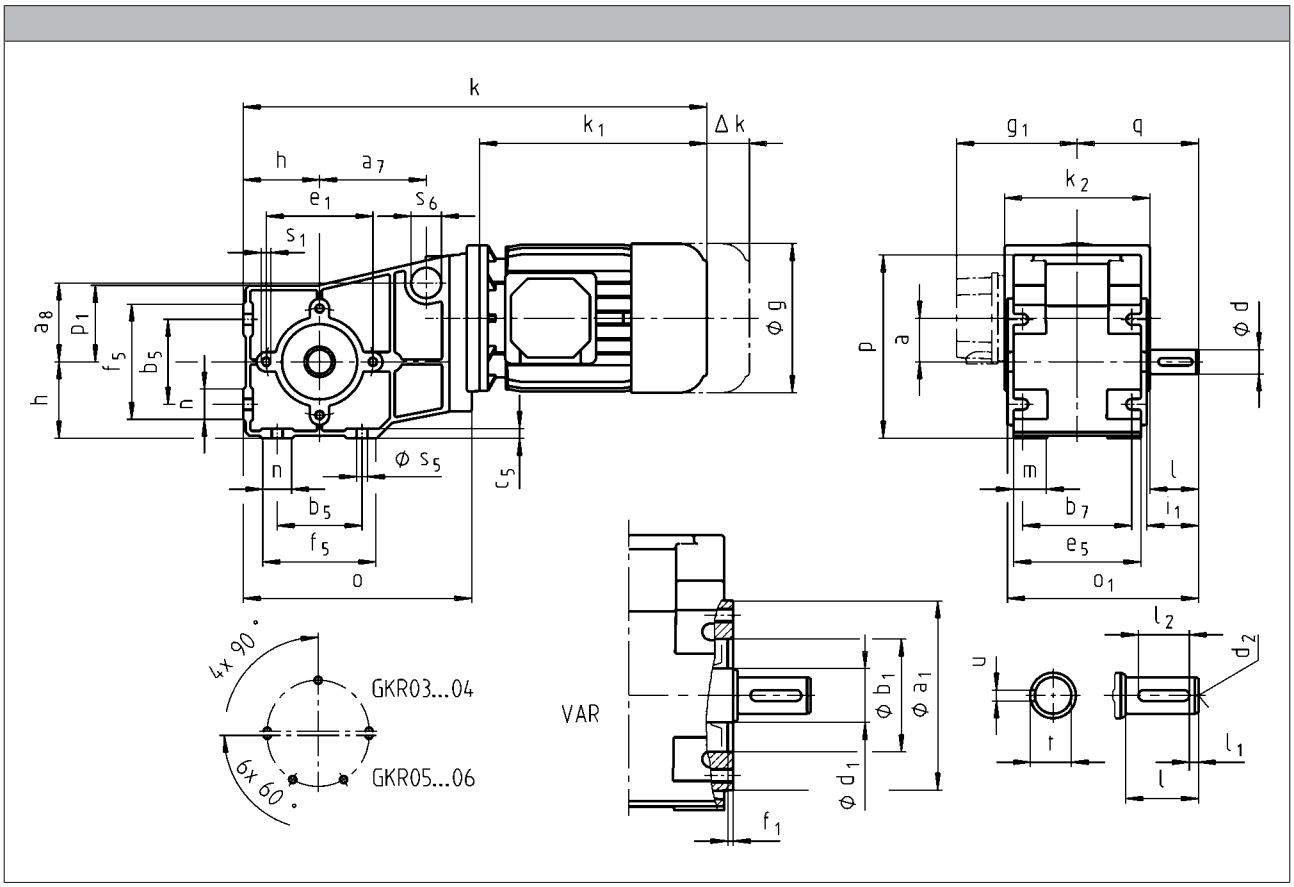

		063C02	063C11	063C12	063C22	063C31	063C32
g		123					
g_1	MDEMAXX MDSMAXX	100					
	MDEMABR MDSMABR	107					
k_1	MDEMAXX MDSMAXX	156	187		156	187	
k_2		100	120		100	120	
Δ k	MDEMABR MDSMABR	71	40		71	40	
	MDFMAXX		128			128	
	MDFMABR		170			170	
		k					
GKR03		301		332	301		332
GKR04			383			383	

GKR bevel gearboxes

Technical data

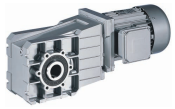

		063C42	071C11 071C13 071C31	071C32	071C33	071C42	080C13 080C33
g		123	139				156
g_1	MDEMAXX MDSMAXX	100	109				150
	MDEMABR MDSMABR	107	118				132
k_1	MDEMAXX MDSMAXX	187	207				224.5
k_2		120					145
Δ k	MDEMABR MDSMABR	40	52				73
	MDFMAXX	128					
	MDFMABR	170	165				183
		k					
GKR03		332		352		352	
GKR04		383	403				425
GKR05		436	456				479
GKR06		488	508				530

	a	a_7	a_8	h	o	p[1)]	p_1	q	s_6
GKR03	29	66	39	50	142	117	48	90	25
GKR04	36	88	65	63	189	151	63	100	25
GKR05	40			80	250.5	181	82	131.5	
GKR06	51			100	307	226	100	155	

	d	d_1	d_2	l	l_1	l_2	u	t	i_1	o_1[1)]	a_1	b_1	e_1	f_1	s_1
	k6											J7			
GKR03	20	30	M6	40	5	28	6	22.5	42.5	137.5	85	55	70	2.5	M6x12
GKR04	20	30	M6	40	5	28	6	22.5	42.5	158	104	62	88	3	M8x16
GKR05	30	50	M10	60	6	45	8	33	64	199	116	80	100	4	M8x15
GKR06	35	65	M12	70	7	56	10	38	75	235	140	100	120	4	M10x22

	b_5	b_7	c_5	e_5	f_5	m	n	s_5
GKR03	60	75	7	90	80	22	20	6.6
GKR04	70	90	8	105	95	28	25	9
GKR05	100	100	11	115	138	27	48	9
GKR06	120	125	12	145	164	32	53	11

[1)] k_2 !

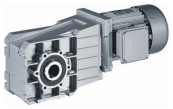

Dimensions

GKR□□-2M V□R

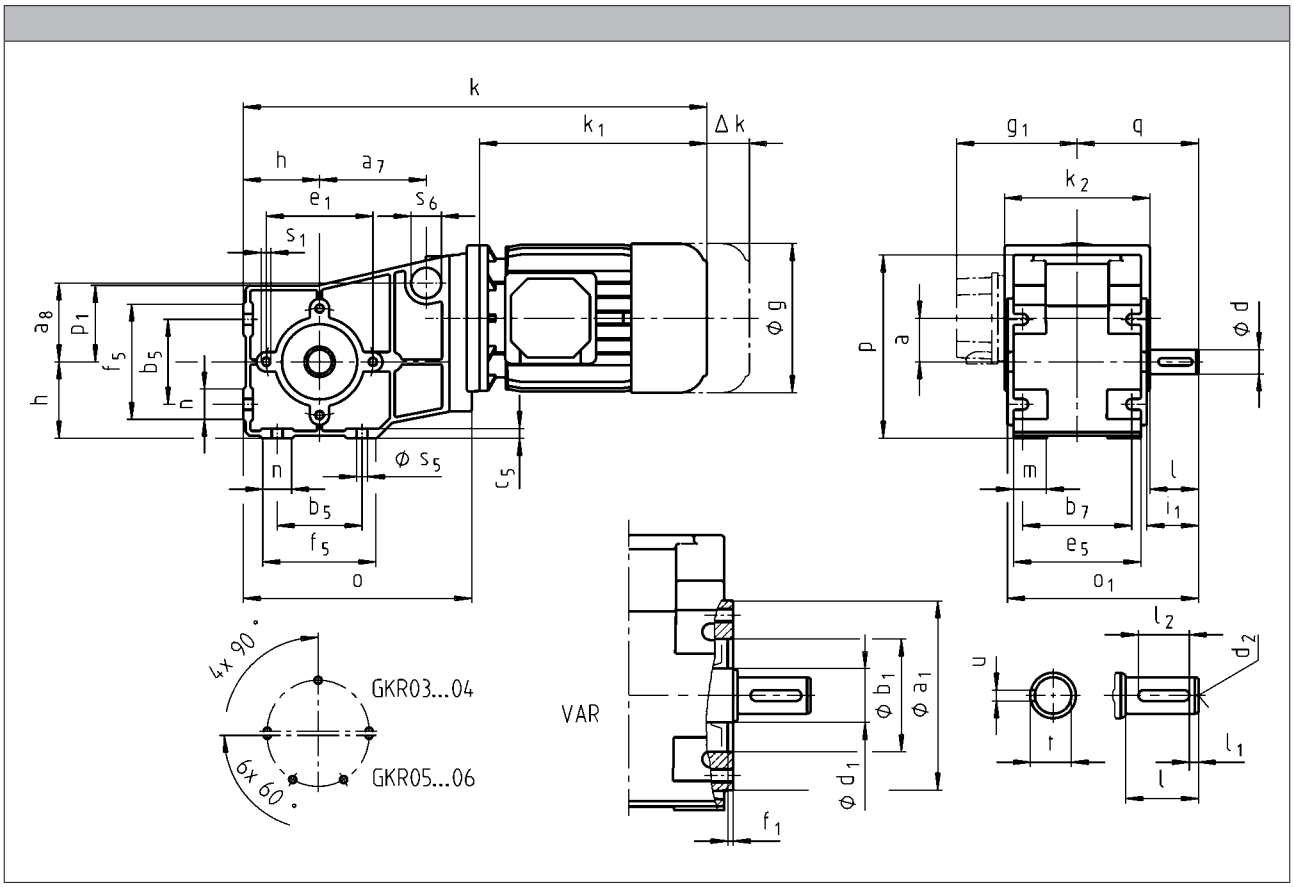

GKR bevel gearboxes

Technical data

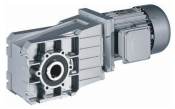

		080C32	090C12	090C32	100C12	100C32	112C22	132C12 132C22
g		156	176		194		218	258
g_1	MHEMAXX	150	152	157	166		176	195
	MHEMABR	132	137		147		158	187
k_1	MHEMAXX	224.5	274		309	324	363	403
k_2		145	180				222	265
Δ k	MHEMABR	73	68		76		90	109.5
	MHFMAXX		128		109		102	115
	MHFMABR	183	181		170		183	201.5
		k						
	GKR04	425	485					
	GKR05	479	538		573	588		
	GKR06	530	590		625	640	685	733

	a	a_7	a_8	h	o	p[1)]	p_1	q	s_6
GKR04	36	88	65	63	189	151	63	100	25
GKR05	40			80	250.5	181	82	131.5	
GKR06	51			100	307	226	100	155	

	d	d_1	d_2	l	l_1	l_2	u	t	i_1	o_1[1)]	a_1	b_1	e_1	f_1	s_1
	k6											J7			
GKR04	20	30	M6	40	5	28	6	22.5	42.5	158	104	62	88	3	M8x16
GKR05	30	50	M10	60	6	45	8	33	64	199	116	80	100	4	M8x15
GKR06	35	65	M12	70	7	56	10	38	75	235	140	100	120	4	M10x22

	b_5	b_7	c_5	e_5	f_5	m	n	s_5
GKR04	70	90	8	105	95	28	25	9
GKR05	100	100	11	115	138	27	48	9
GKR06	120	125	12	145	164	32	53	11

[1)] k_2 !

Dimensions

GKR□□-2M VAK

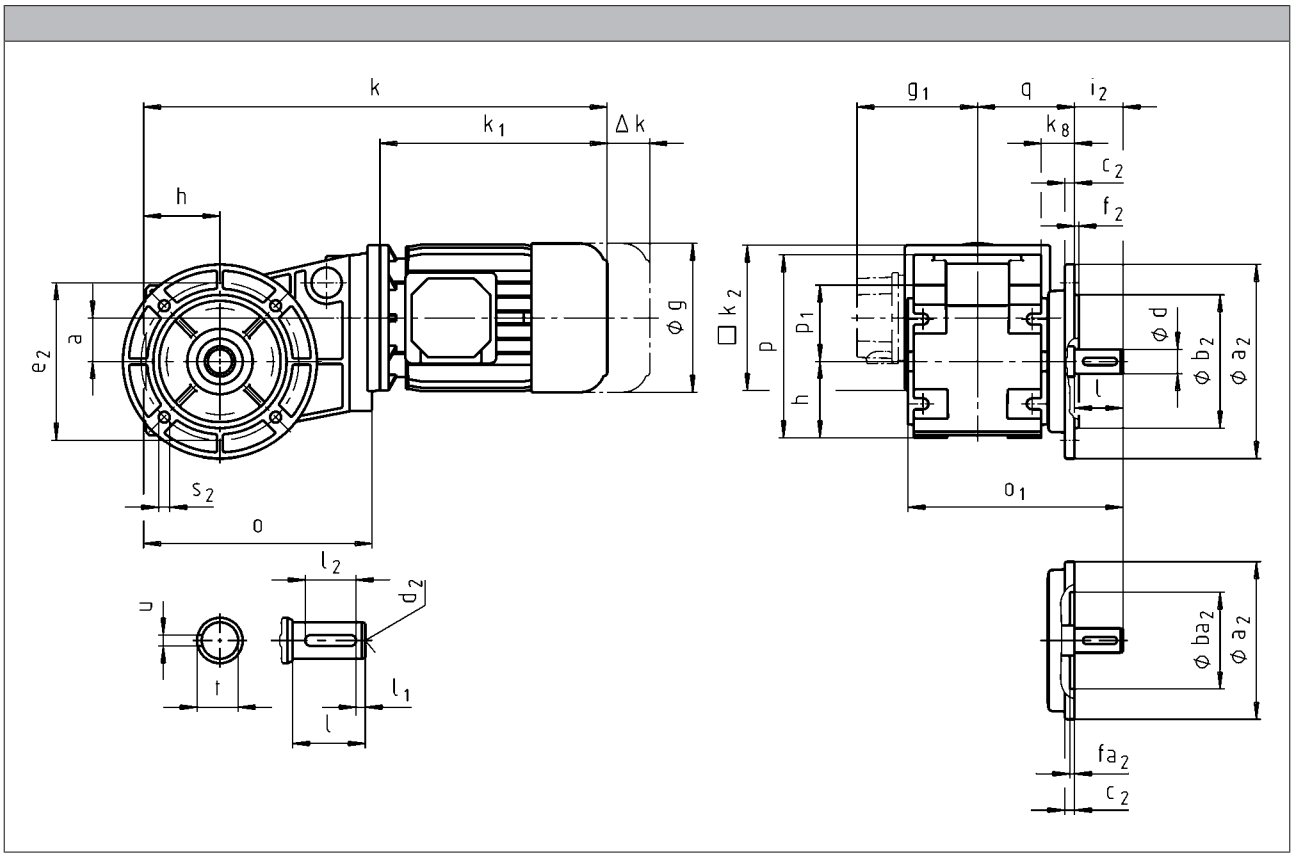

		063C02	063C11	063C12	063C22	063C31	063C32
g		123					
g_1	MDEMAXX MDSMAXX	100					
	MDEMABR MDSMABR	107					
k_1	MDEMAXX MDSMAXX	156	187		156	187	
k_2		100	120		100	120	
Δ k	MDEMABR MDSMABR	71	40		71	40	
	MDFMAXX		128			128	
	MDFMABR		170			170	
		k					
GKR03		301		332	301		332
GKR04			383			383	

GKR bevel gearboxes

Technical data

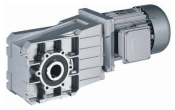

		063C42	071C11 071C13 071C31	071C32	071C33	071C42	080C13 080C33
g		123	139				156
g_1	MDEMAXX MDSMAXX	100	109				150
	MDEMABR MDSMABR	107	118				132
k_1	MDEMAXX MDSMAXX	187	207				224.5
k_2		120					145
Δ k	MDEMABR MDSMABR	40	52				73
	MDFMAXX	128					
	MDFMABR	170	165				183
		k					
GKR03		332		352		352	
GKR04		383	403				425
GKR05		436	456				479
GKR06		488	508				530

	a	h	k_8	o	p[1)]	p_1	q
GKR03	29	50	35	142	117	48	80
GKR04	36	63	28	189	151	63	80.5
GKR05	40	80	47.5	250.5	181	82	105
GKR06	51	100	54	307	226	100	126.5

	d	d_2	l	l_1	l_2	u	t	i_2	o_1[1)]	a_2	b_2	ba_2	c_2	e_2	f_2	fa_2	s_2
	k6										j7	H7					
GKR03	20	M6	40	5	28	6	22.5	40	167.5	120 110	80 -	- 60	8 8	100 87	3 -	- 4	7 9
GKR04	20	M6	40	5	28	6	22.5	40	178	120 160	80 110		8 8	100 130	3 3.5		7 9
GKR05	30	M10	60	6	45	8	33	60	232.5	160 200	110 130		12 12	130 165	3.5 3.5		9 11
GKR06	35	M12	70	7	56	10	38	70	276.5	200 250	130 180		12 12	165 215	3.5 4		11 14

[1)] k_2 !

Dimensions

GKR□□-2M VAK

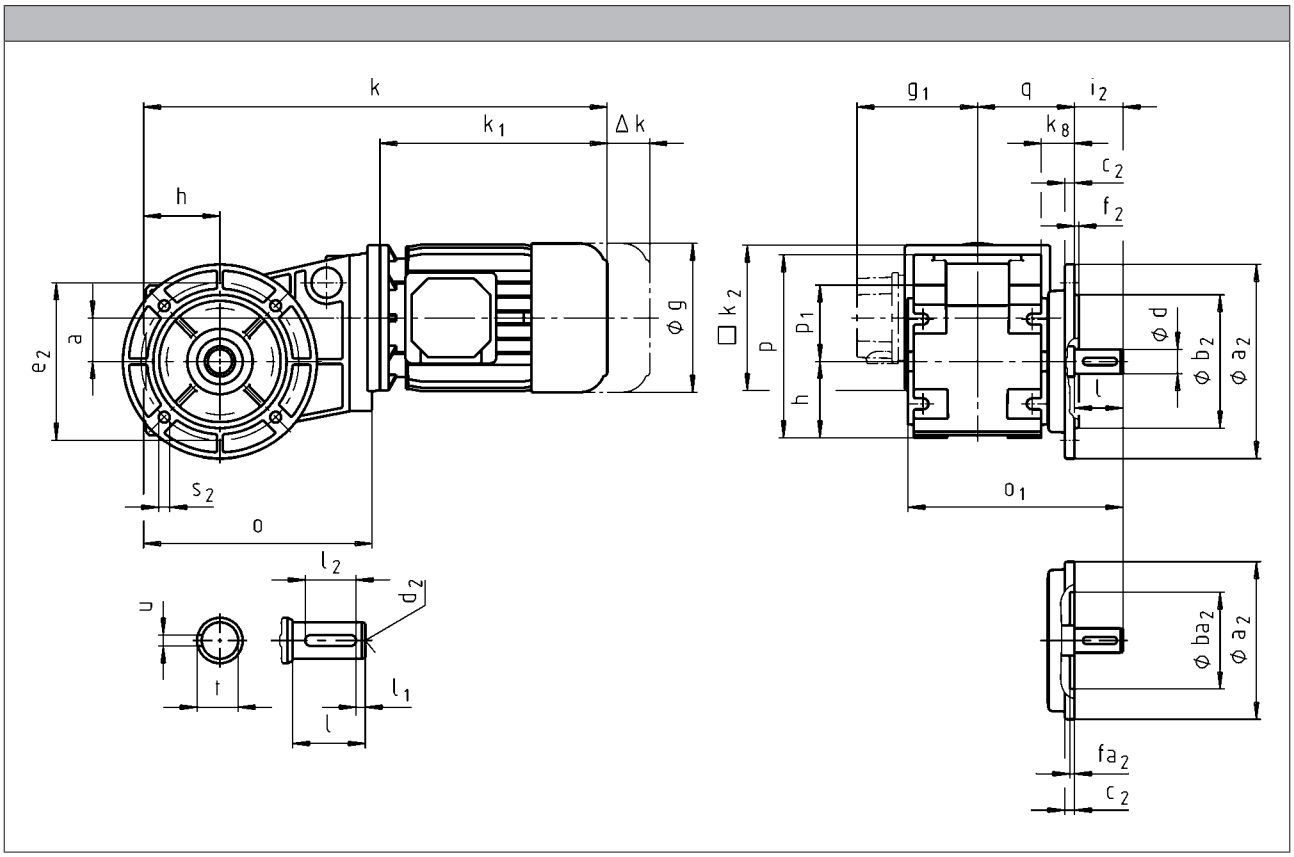

GKR bevel gearboxes

Technical data

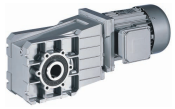

		080C32	090C12	090C32	100C12	100C32	112C22	132C12 132C22
g		156	176		194		218	258
g_1	MHEMAXX	150	152	157	166		176	195
	MHEMABR	132	137		147		158	187
k_1	MHEMAXX	224.5	274		309	324	363	403
k_2		145	180				222	265
Δ k	MHEMABR	73	68		76		90	109.5
	MHFMAXX		128		109		102	115
	MHFMABR	183	181		170		183	201.5
		k						
	GKR04	425	485					
	GKR05	479	538		573	588		
	GKR06	530	590		625	640	685	733

	a	h	k_8	o	p[1)]	p_1	q
GKR04	36	63	28	189	151	63	80.5
GKR05	40	80	47.5	250.5	181	82	105
GKR06	51	100	54	307	226	100	126.5

	d	d_2	l	l_1	l_2	u	t	i_2	o_1[1)]	a_2	b_2	c_2	e_2	f_2	s_2
	k6										j7				
GKR04	20	M6	40	5	28	6	22.5	40	178	120 160	80 110	8 8	100 130	3 3.5	7 9
GKR05	30	M10	60	6	45	8	33	60	232.5	160 200	110 130	12 12	130 165	3.5 3.5	9 11
GKR06	35	M12	70	7	56	10	38	70	276.5	200 250	130 180	12 12	165 215	3.5 4	11 14

[1)] k_2 !

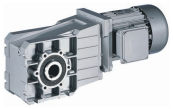

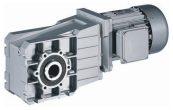

Hollow shaft with shrink disc

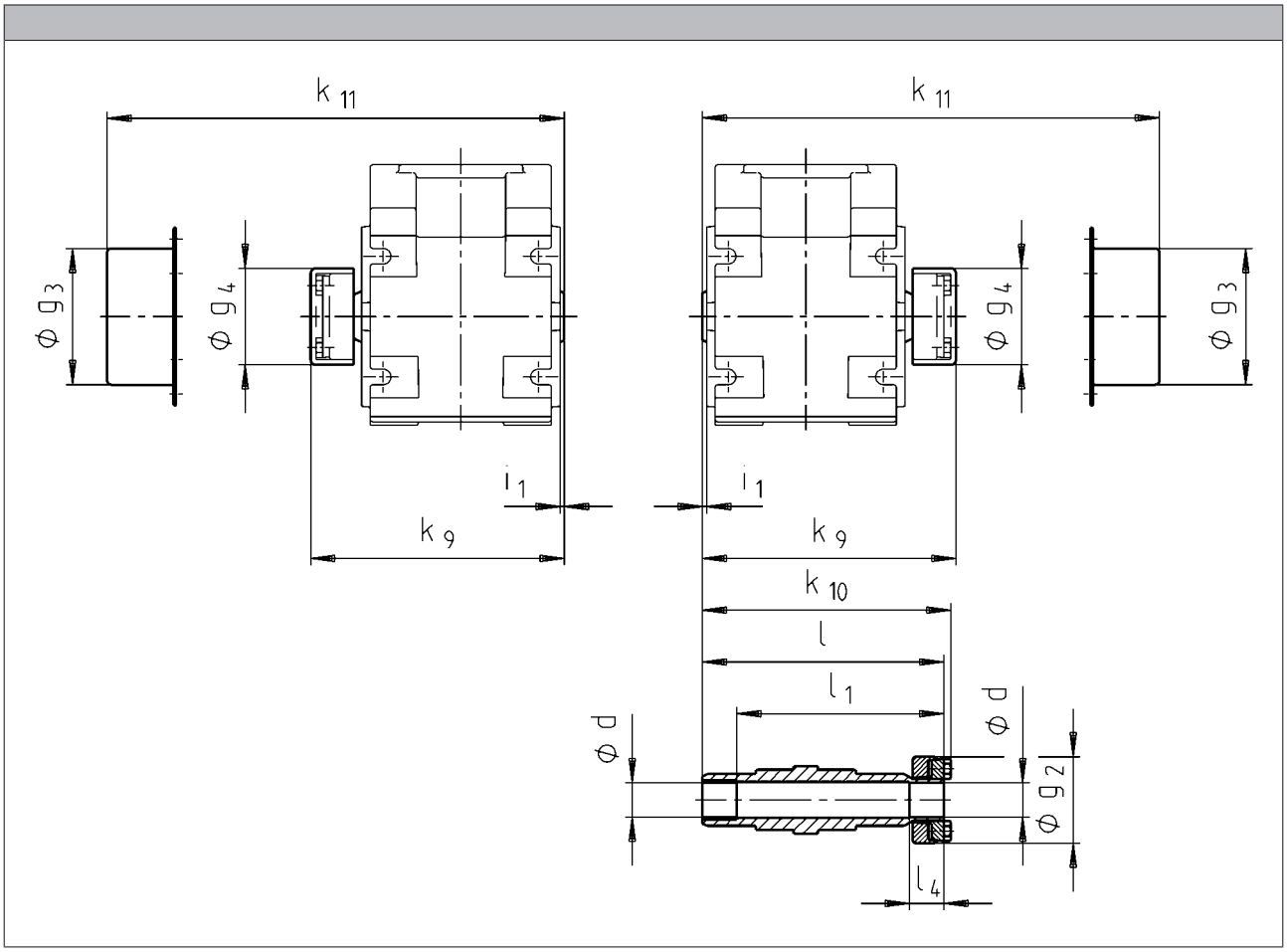

	d [1]	g_2	g_3	g_4	i_1	k_9	k_{10}	k_{11}	l	l_1	l_4
	h6										
GKR03	20	50	65	54	2.5	126	124	138	120	100	20
GKR04						146	144	158	144	120	
GKR05	30 35	80	90	84	4.0	176	177	182	171	151	28
GKR06	40	90	100	94	5.0	202	210	214	204	174	30

[1] Machine shaft design.

- ► Output flange and hollow shaft with shrink disc (output version SAK) are not possible in the same location. For additional dimensions see output version H□□.
- ► Ensure that the strength of the machine shaft material is adequate in shrink disc designs.
  When using typical steels, e.g. C45, 42CrMo4, the torques listed in the selection tables can be used without restriction.
  Please consult us if you wish to use material that is considerably weaker. Medium surface roughness Rz must not exceed 15 µm (turning is sufficient).

Mounting set for hollow shaft circlip:
Proposed design for auxiliary tools

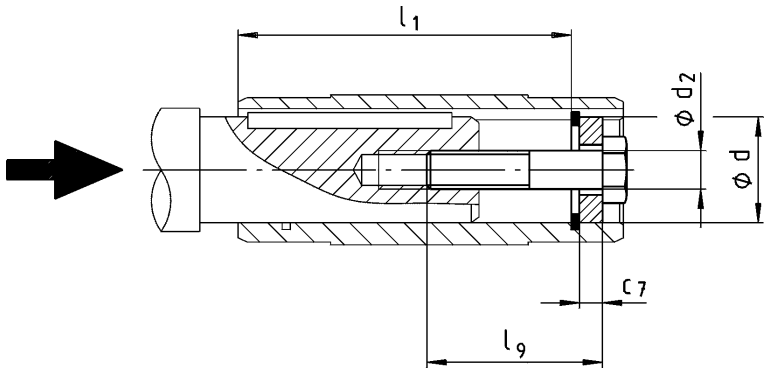

	d	l_1	d_2	l_9	c_7
	H7				
GKR03	18 20	85	M6	40	4
GKR04	20 25	105			
			M10		5
GKR05	30 35	127			6
			M12	50	7
GKR06	40 45	150	M16	60	8
					9

Hoseproof hollow shaft cover

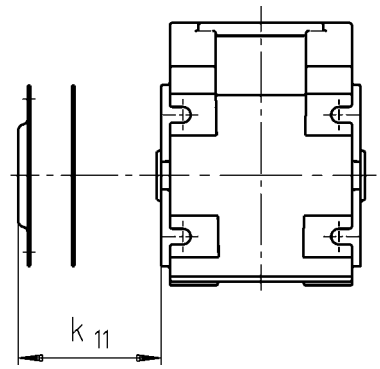

► Cover including gasket

	k_{11}
	[mm]
GKR03	9
GKR04	
GKR05	10
GKR06	11

Gearboxes with 2nd output shaft end

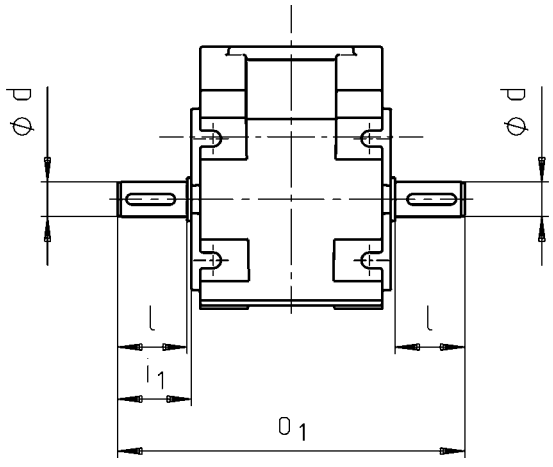

	d	l	i_1	o_1
	k6			
	[mm]	[mm]	[mm]	[mm]
GKR03	20	40	42.5	180
GKR04				200
GKR05	30	60	64.0	263
GKR06	35	70	75.0	310

Rubber buffer for torque plate

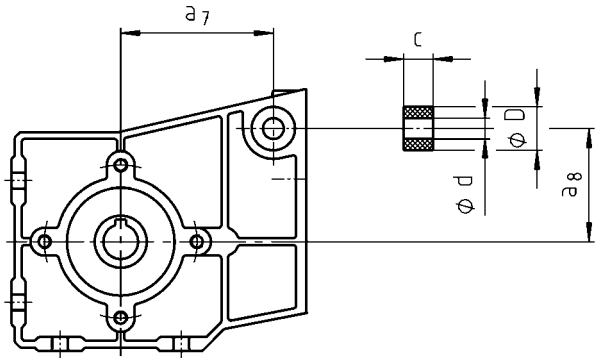

	d	D	c	a_7	a_8
GKR03	10	25	13.0	66.0	39
GKR04				88.0	65

Torque plate on threaded pitch circle

In position 3

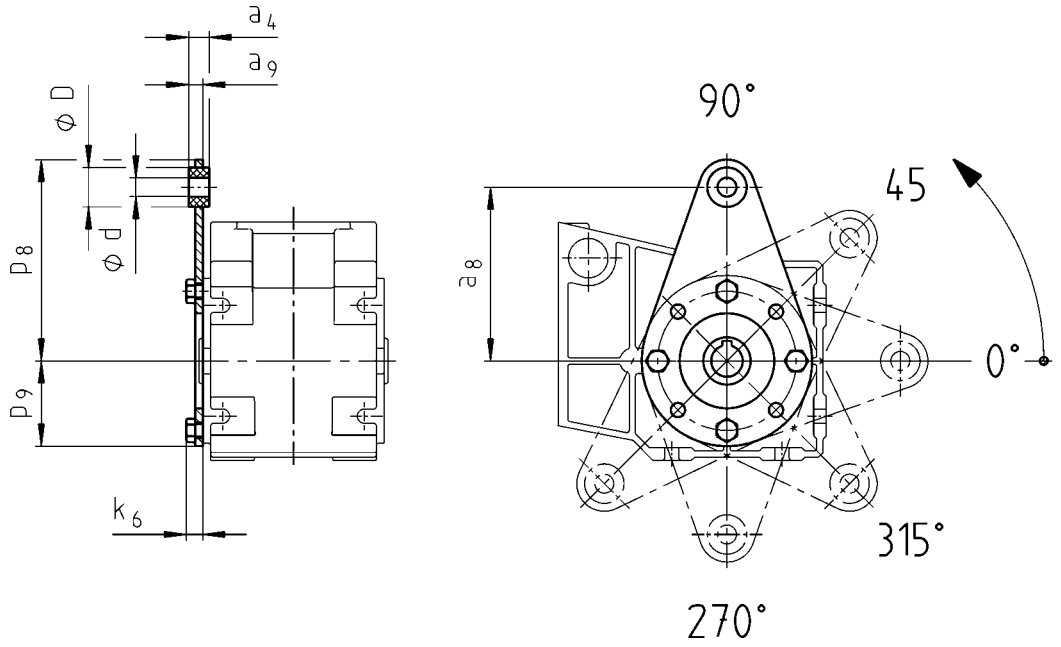

In position 5

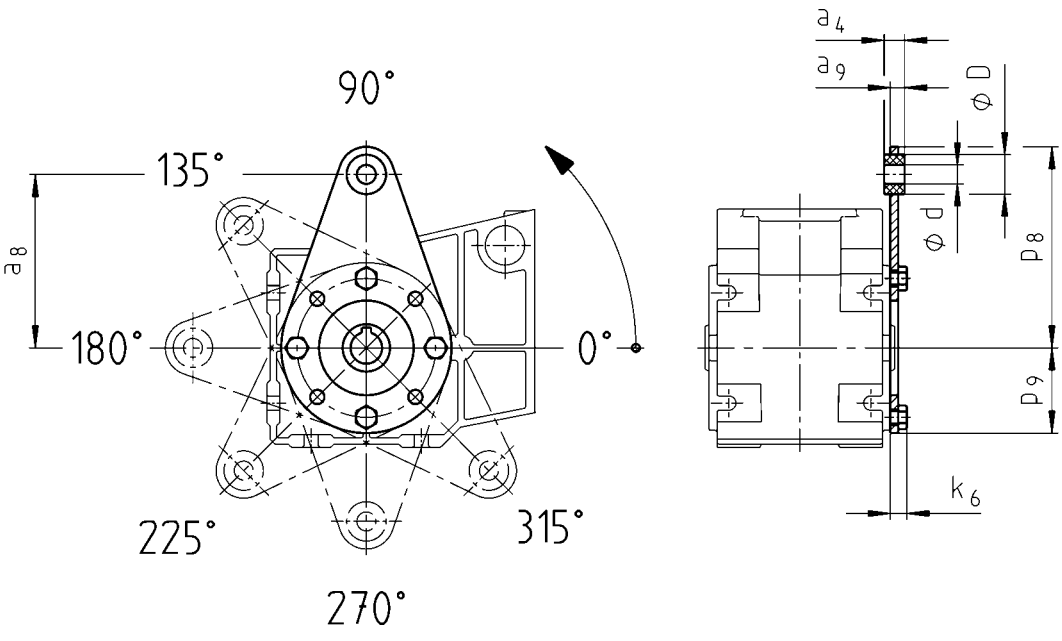

	a_4	a_8	a_9	d	D	k_6	p_8	p_9
GKR03	12	100	8.0	8	20	9	115	42
GKR04	13	110	9.0	10	25	11	128	54

Torque plate on threaded pitch circle

In position 3

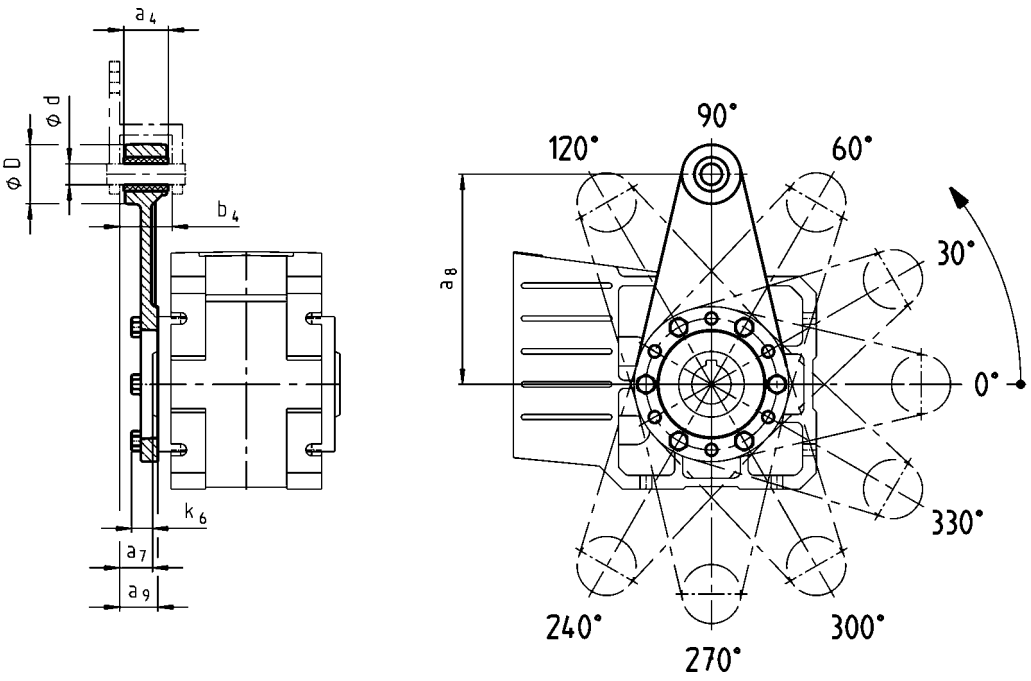

In position 5

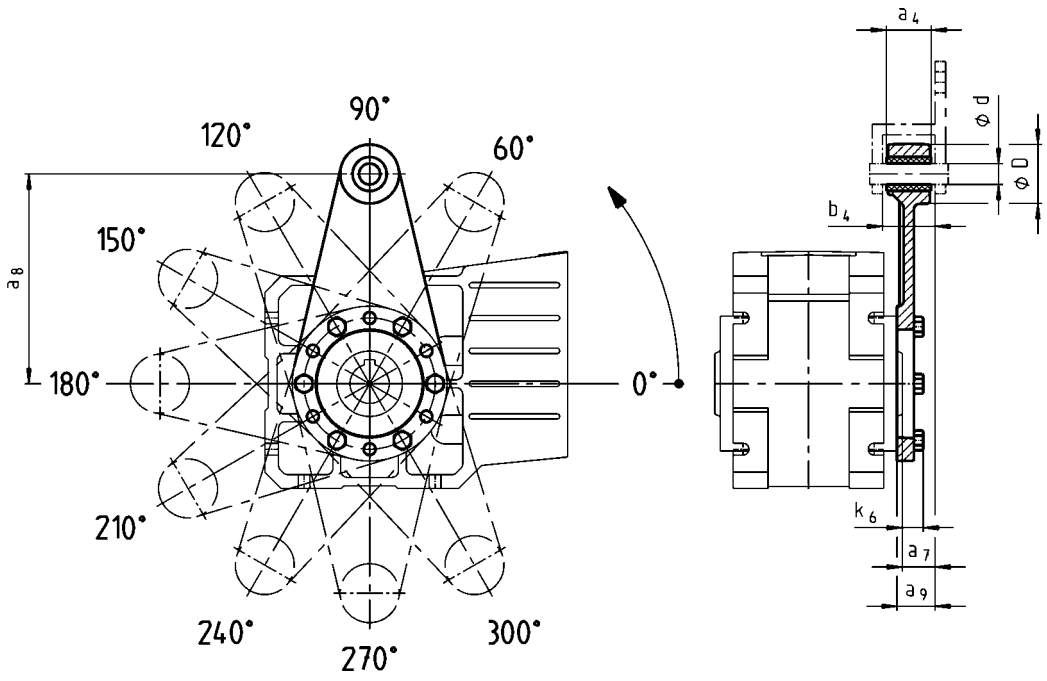

	a_4	a_7	a_8	a_9	b_4	d	D	k_6
GKR05	34	23.5	160	27.5	38.5	16	45	15
GKR06	40	28.0	200	33.0	44.5	20	50	18

Torque plate at housing foot

In position 4 or 6

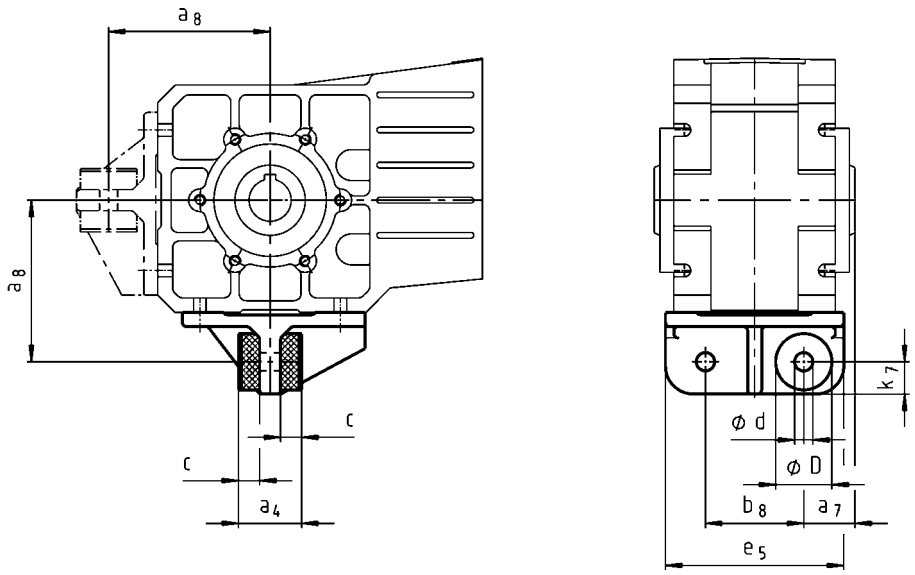

	a_4	a_7	a_8	b_8	c	d	D	e_5	k_7
GKR05	45	36.5	115	70	15.0	13	40	127	25
GKR06	72	45.0	145	80	27.0	17	50	145	30

Ventilation position

GKR06

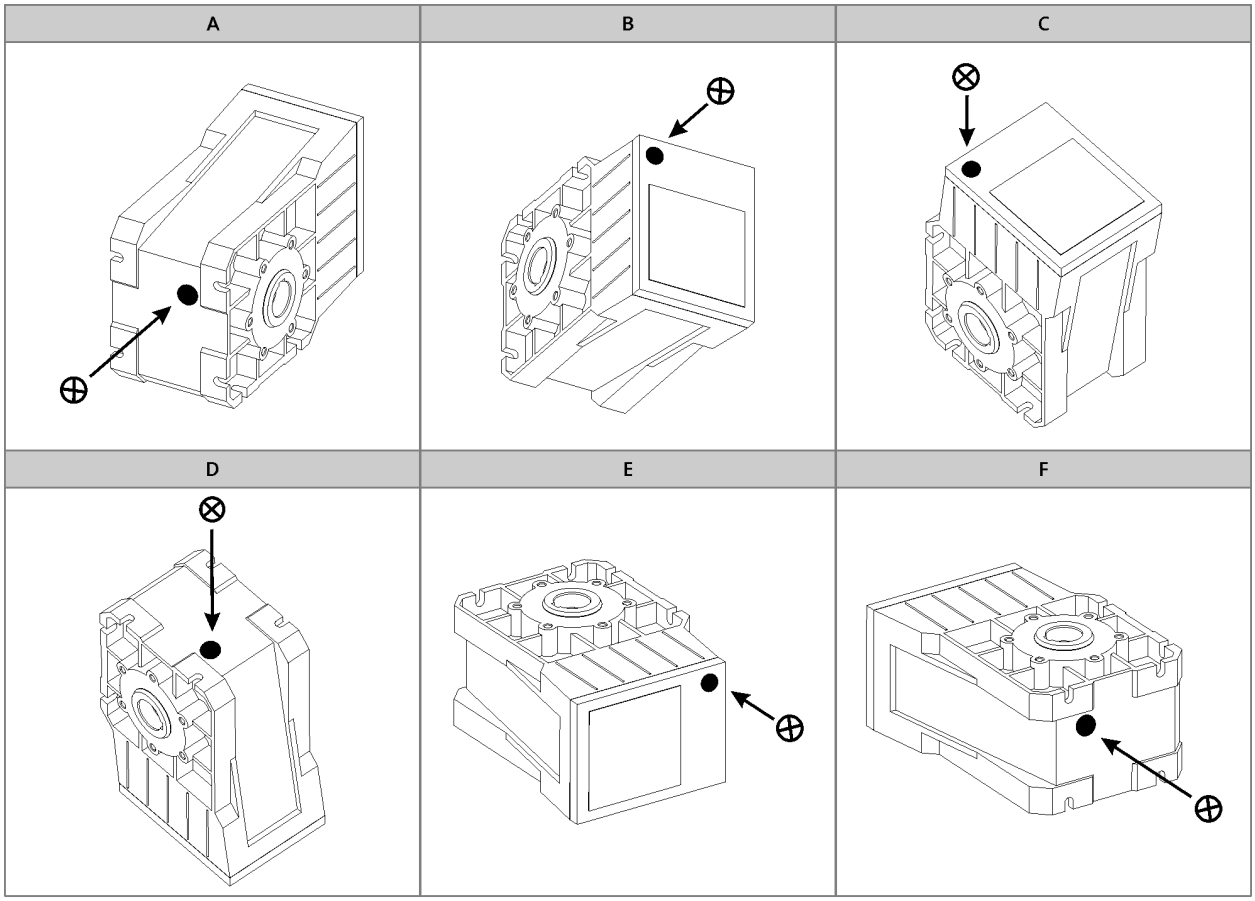

⊗ Ventilation

GKS helical-bevel gearboxes

MD/MH three-phase AC motors
0.12 to 0.55 kW
0.75 to 45 kW (IE2)

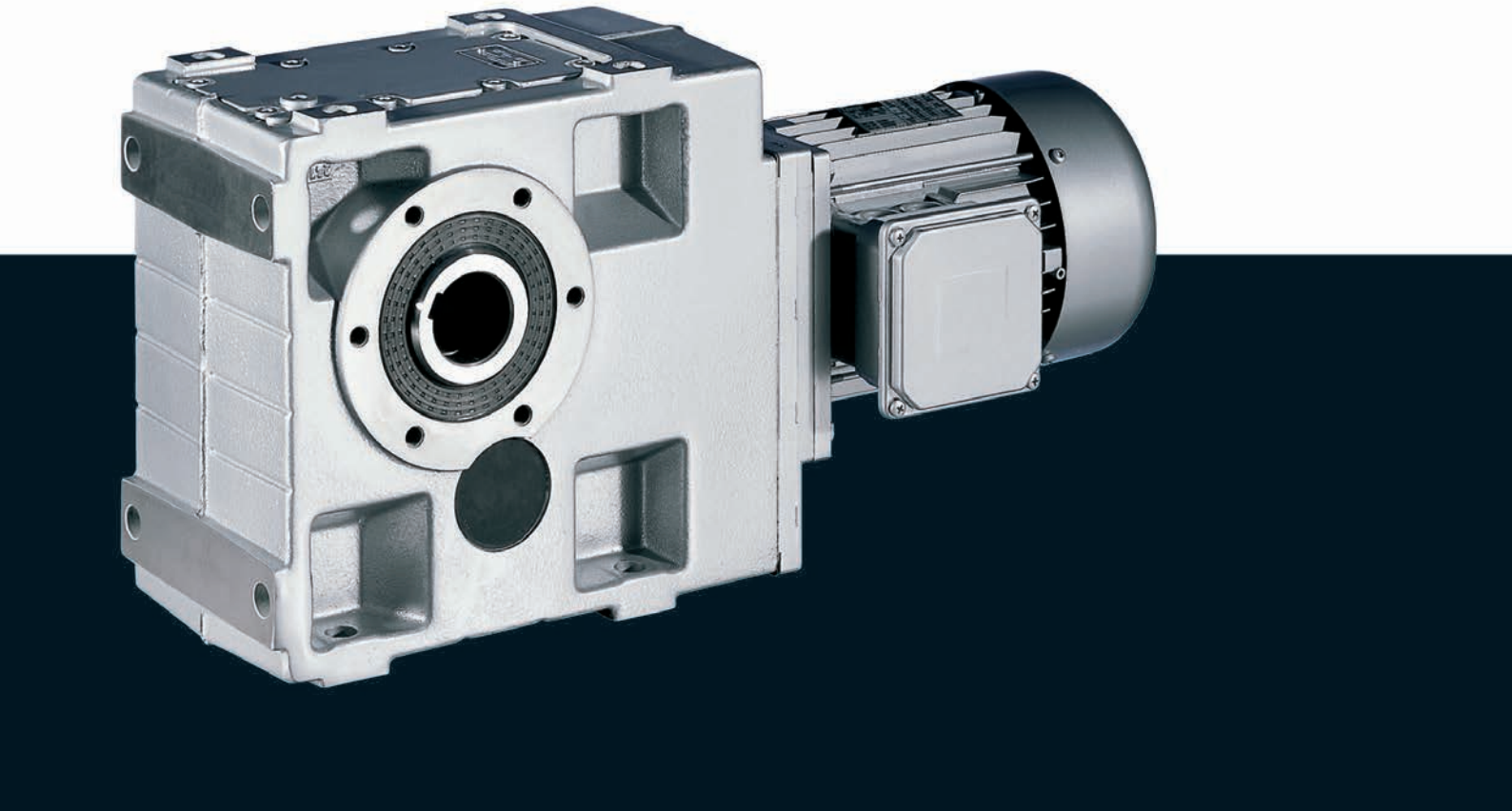

GKS helical-bevel gearboxes



Contents

General information	List of abbreviations	6.9 - 4
	Product key	6.9 - 5
	Product information	6.9 - 7
	Functions and features	6.9 - 8
	Dimensioning	6.9 - 13
	Notes on ordering	6.9 - 19
	Ordering details checklist	6.9 - 20
Technical data	Permissible radial and axial forces at output	6.9 - 25
	Output backlash in angular minutes	6.9 - 29
	Moments of inertia	6.9 - 30
	Weights	6.9 - 37
	Selection tables	6.9 - 44
	Dimensions	6.9 - 106
Accessories	Hollow shaft with shrink disc	6.9 - 139
	Mounting set for hollow shaft circlip: Proposed design for auxiliary tools	6.9 - 140
	Hoseproof hollow shaft cover	6.9 - 141
	Gearboxes with 2nd output shaft end	6.9 - 142
	Torque plate on threaded pitch circle	6.9 - 143
	Torque plate at housing foot	6.9 - 144
	Ventilations	6.9 - 145



List of abbreviations

$\eta_{c=1}$		Efficiency
c		Load capacity
f_N	[Hz]	Rated frequency
$F_{ax,max}$	[N]	Max. axial force
$F_{rad,max}$	[N]	Max. radial force
H_{max}	[m]	Site altitude
i		Ratio
J	[kgcm²]	Moment of inertia
m	[kg]	Mass
M_2	[Nm]	Output torque
n_2	[r/min]	Output speed
n_N	[r/min]	Rated speed
P_N	[kW]	Rated power
$S_{hü}$	[1/h]	Transition operating frequency
$T_{opr,max}$	[°C]	Max. ambient operating temperature
$T_{opr,min}$	[°C]	Min. ambient operating temperature
$U_{N,\Delta}$	[V]	Rated voltage
$U_{N,Y}$	[V]	Rated voltage

CE	Communauté Européenne
CSA	Canadian Standards Association
DIN	Deutsches Institut für Normung e.V.
EMC	Electromagnetic compatibility
EN	European standard
IEC	International Electrotechnical Commission
IM	International Mounting Code
IP	International Protection Code
NEMA	National Electrical Manufacturers Association
UL	Underwriters Laboratory Listed Product
UR	Underwriters Laboratory Recognized Product
VDE	Verband deutscher Elektrotechniker (Association of German Electrical Engineers)
CCC	China Compulsory Certificate
GOST	Certificate for Russian Federation
cURus	Combined certification marks of UL for the USA and Canada
UkrSEPRO	Certificate for Ukraine



Product key

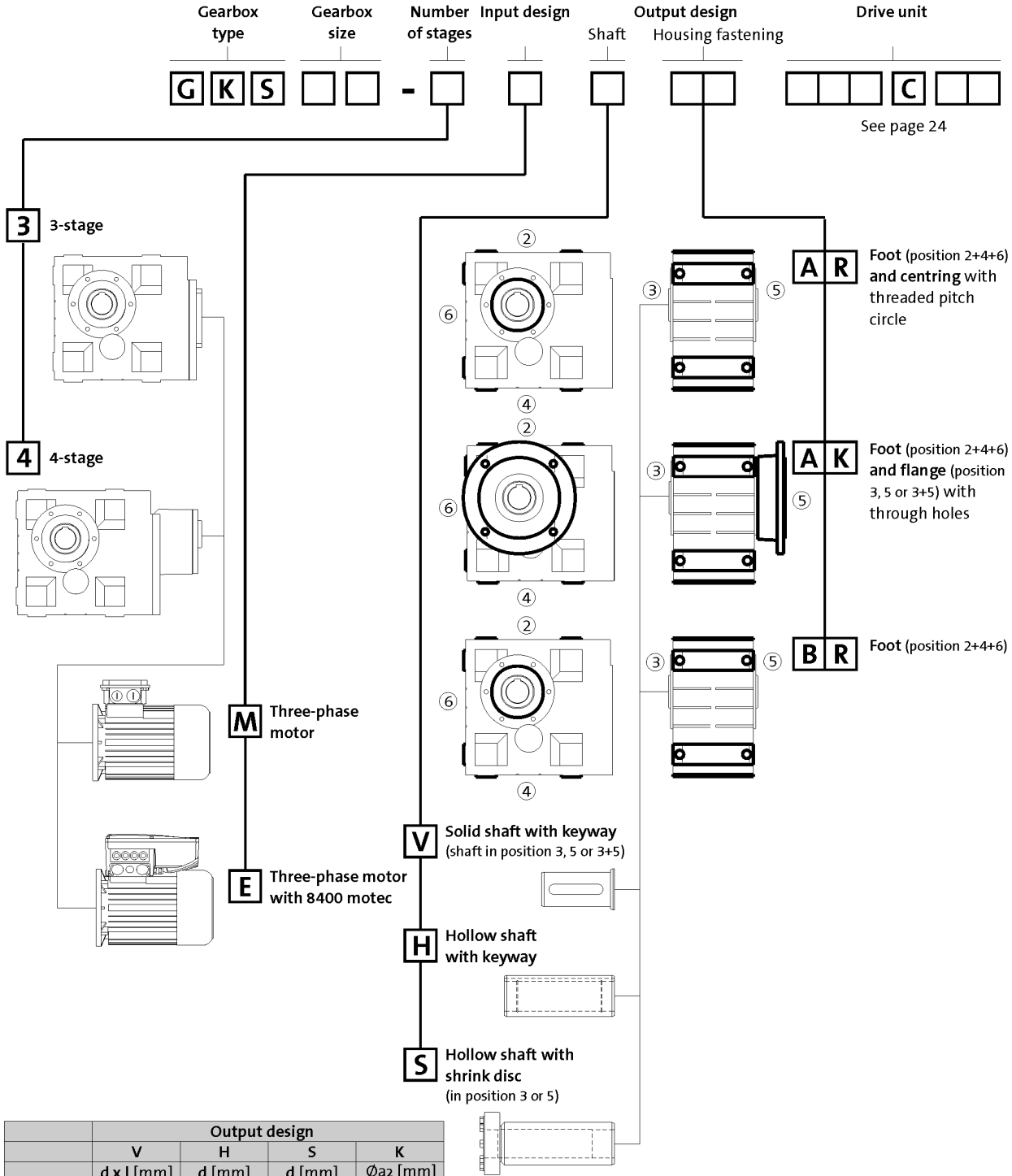

	Output design			
	V	H	S	K
	d x l [mm]	d [mm]	d [mm]	Øa2 [mm]
GKS04-3	25x50	25/30	25/30	160
GKS05-3/4	30x60	30/35	35	200
GKS06-3/4	40x80	40/45	40	200[1]/250
GKS07-3/4	50x100	50/55	50	250/300
GKS09-3/4	60x120	60/70	65	350
GKS11-3/4	80x160	70/80	80	400/450
GKS14-3/4	100x200	100	100	450

[1] Only in the case of H and S type of output



Product key

Mounting position (A to F) and position of system blocks (1 to 6)

A	B	C
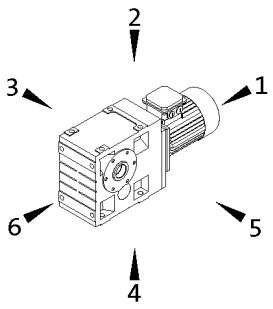	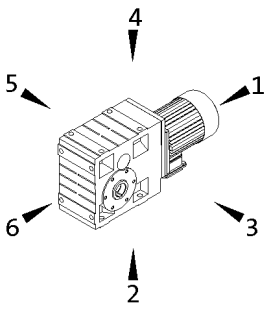	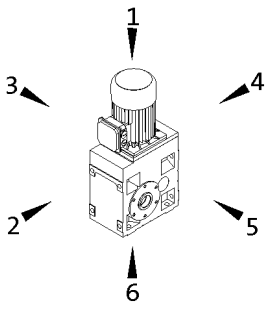
D	**E**	**F**
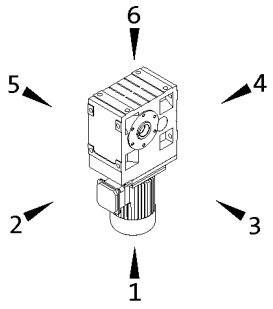	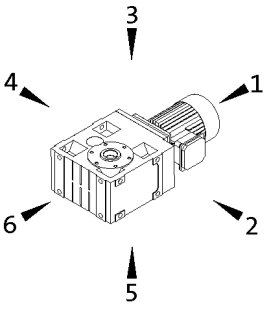	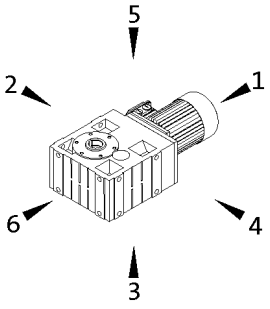

Hollow shaft: 0
Solid shaft: 3, 5, 8 (3+5)
Hollow shaft with shrink disc: 3, 5

Without flange: 0
Flange: 3, 5, 8 (3+5)
Terminal box / motec: 2, 3, 4, 5

Gearbox designs

Basic versions	
Motor efficiency	Standard efficiency Increased efficiency (IE2)
Surface and corrosion protection	OKS-G (primer: grey) OKS-S (paint: RAL 7012)
Lubricant	CLP 460 (mineral)
Ventilation	Oil control plugs for GKS05 to 14 Breather elements for GKS06 ... 14

Options	
Surface and corrosion protection	OKS-S (special paint according to RAL) OKS-M (special paint according to RAL) OKS-L (special paint according to RAL)
Lubricant	CLP HC 320 (synthetic) CLP HC 220 USDA H1 (synthetic)
Shaft sealing rings	Driven shaft: Viton
Ventilation	Breather elements for GKS05 Compensation reservoir for GKS09 to 14-3 in mounting position C
Accessories	Torque plate on threaded pitch circle Housing foot torque plate 2nd output shaft end Shrink disc cover Hoseproof hollow shaft cover Mounting set for hollow shaft circlip
Nameplate	Metal nameplate (supplied loose) Adhesive nameplate (supplied loose)



Product information

Lenze provides a geared motor construction kit, which covers a wide range of requirements. Numerous drive-side and output-side options enable precise adaptation of the drive to the specific application. This is the basis for versatile applications and functional scalability of our gearboxes and geared motors.
The modular concept and high power density make extremely compact sizes possible. Optimised teeth profiles and ground gears ensure low-noise operation and low backlash. The gearboxes are of compact and hence space-saving construction.

For maximum precision

Helical-bevel gearboxes have the major benefit of enabling extremely precise and reproducible positioning movements owing to their high torsional stiffness and low backlash. Our helical-bevel gearboxes can be combined with three-phase AC motors and servo motors to form a compact unit. They are available in 3- and 4-stage versions with a torque of up to 11,639 Nm and a ratio of up to i=1,936.

Inverters for motor-proximity installation

The Drive Package with decentralised Inverter Drives 8400 motec covers a power range up to 7.5 kW.

Designs

- 3-stage and 4-stage gearboxes
- Hollow shaft with keyway or shrink discSolid shaft with keyway
- Solid shaft with keyway
- Foot or flange mounting
- Torque plate, including rubber buffer
- With three-phase AC motors MD, power range 0.12 ... 0.55 kW
- With three-phase AC motors MH (efficiency class IE2) , power range 0.75 ... 45 kW

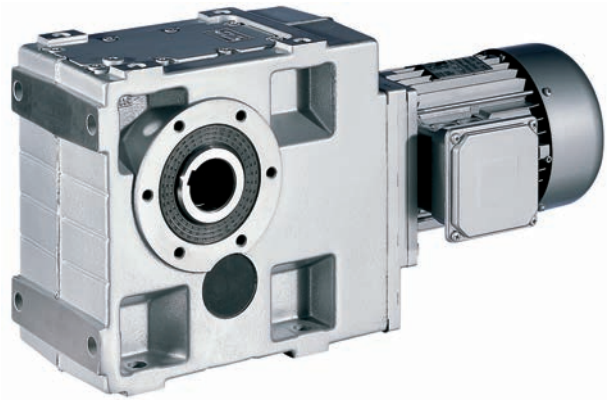

Helical-bevel geared motor GKS07-3M HBR 100-32



Functions and features

Gearbox type	GKS
Housing	
Design	Cuboid
Material	Aluminium / cast iron
Solid shaft	
Design	with keyway to DIN 6885
Tolerance	k6 (d ≤ 50 mm) m6 (d > 50 mm)
Material	Tempered steel C45 or 42CrMo4
Hollow shaft	
Design	H: with keyway S: smooth
Tolerance	Bore H7
Material	Tempered steel C45
Toothed part	
Design	Ground tooth flanks Optimised tooth flank geometry
Material	Case-hardened steel
Shaft-hub joint	1st stage/prestage/helical (bevel) gearbox: Friction-type connection Output stage (= 2nd, 3rd or 4th stage): Friction-type or positive-fit connection
Shaft sealing rings	
Design	With dust lip
Material	NB / FP
Bearing	
Design	Ball bearing / tapered-roller bearing depending on size and design
Schmierstoffe	
Standard	DIN 51502
Quantities	corresponding to mounting position (see operating instructions)
Mechanical efficiency	
1-stage gearboxes [$\eta_{c=1}$]	
2-stage gearboxes [$\eta_{c=1}$]	
3-stage gearboxes [$\eta_{c=1}$]	0.95
4-stage gearboxes [$\eta_{c=1}$]	0.93
Notes	



Functions and features

Lubricants

Lenze gearboxes and geared motors are ready for operation on delivery and are filled with lubricants specific to both the drive and the design. The mounting position and design specified in the order are key factors in choosing the volume of lubricant.

The lubricants listed in the lubricant table are approved for use in Lenze drives.

Lubricant table

Mode	CLP 460	CLP HC 320	CLP HC 220 USDA H1
Ambient temperature [°C]	0 ... +40	-25 ... +50	-20 ... +40
Specification	Mineral based oil with additives	Synthetic-based oil (synthetic hydrocarbon / poly-alpha-olefin oil)	
Note			For food processing industry
Changing interval	16000 operating hours not later than after three years (oil temperature 70 to 80 °C)	25000 operating hours not later than after three years (oil temperature 70 to 80 °C)	16000 operating hours not later than after three years (oil temperature 70 to 80 °C)
Fuchs	Fuchs Renolin CLP 460	Fuchs Renolin Unisyn CLP 320	bremer & leguil Cassida Fluid GL 220
Klüber	Klüberoil GEM1-460 N	Klübersynth GEM4-320 N	Klüberoil 4 UH1-220 N
Shell	Shell Omala S2 G 460	Shell Omala S4 GX HD 320	

► Please contact your Lenze sales office if you are operating at ambient temperatures in areas up to< -20 °C bzw. > or up to +40°C.



Functions and features

Surface and corrosion protection

For optimum protection of geared motors against ambient conditions, the surface and corrosion protection system (OKS) offers tailor-made solutions.

Various surface coatings combined with other protective measures ensure that the geared motors operate reliably even at high air humidity, in outdoor installations or in the presence of atmospheric impurities. Any colour from the RAL Classic collection can be chosen for the top coat. The geared motors are also available unpainted (no surface and corrosion protection).

Surface and corrosion protection system	Applications	Measures
	Catalogue text	Catalogue text
OKS-G (primed)	• Dependent on subsequent top coat applied	• 2K PUR priming coat (grey) • Zinc-coated screws • Rust-free breather elements Optional measures • Stainless steel nameplate
OKS-S (small)	• Standard applications • Internal installation in heated buildings • Air humidity up to 90%	• Surface coating as per corrosivity category C1 (in line with EN 12944-2) • Zinc-coated screws • Rust-free breather elements Optional measures • Stainless steel nameplate
OKS-M (medium)	• Internal installation in non-heated buildings • Covered, protected external installation • Air humidity up to 95%	• Surface coating as per corrosivity category C2 (in line with EN 12944-2) • Zinc-coated screws • Rust-free breather elements Optional measures • Stainless steel shaft • Stainless steel nameplate • Rust-free shrink disc (on request)
OKS-L (high)	• External installation • Air humidity above 95% • Chemical industry plants • Food industry	• Surface coating as per corrosivity category C3 (in line with EN 12944-2) • Blower cover and B end shield additionally primed • Cable glands with gaskets • Corrosion-resistant brake with cover ring, stainless friction plate, and chrome-plated armature plate (on request) • All screws/screw plugs zinc-coated • Stainless breather elements • Threaded holes that are not used are closed by means of plastic plugs Optional measures • Sealed recesses on motor (on request) • Stainless steel shaft • Stainless steel nameplate • Rust-free shrink disc (on request) • Additional priming coat on cast iron fan • Oil expansion tank and torque plates painted separately and supplied loose



Functions and features

Structure of surface coating

Surface and corrosion protection system	Corrosivity category	Surface coating	Colour
	DIN EN ISO 12944-2	Structure	
Without OKS (uncoated)		Dipping primed gearbox	
OKS-G (primed)		Dipping primed gearbox 2K PUR priming coat	
OKS-S (small)	C1	Dipping primed gearbox 2K-PUR top coat	Standard: RAL 7012 Optional: RAL Classic
OKS-M (medium)	C2	Dipping primed gearbox 2K PUR priming coat 2K-PUR top coat	Standard: RAL 7012 Optional: RAL Classic
OKS-L (high)	C3	Dipping primed gearbox 2K PUR priming coat 2K-PUR top coat	Standard: RAL 7012 Optional: RAL Classic



Functions and features

Ventilation

Non-ventilated gearboxes
No ventilation is required for gearbox GKS04.

Gearboxes that may optionally be equipped with ventilation
Special measures are not usually required when using the GST05 gearbox. In borderline cases, e.g. at input speeds > 2000 rpm, we recommend the use of breather elements, which we can supply if required.

Ventilated gearboxes
Gearboxes GKS06 to 14 are supplied with breather elements as standard.

Special measures for mounting position C (motor on top)
We recommend that an oil compensation reservoir is always used with gearbox sizes G□□09 to 14 in this mounting position. This reservoir can be purchased as an option. For illustrations and measures, please refer to the Accessories chapter.

This is not required at higher ratios or low input speeds. Please contact Lenze for confirmation in this case.



Dimensioning

General information about the data provided in this catalogue

Powers, torques and speeds
The powers, torques and speeds specified in this catalogue are rounded values and are valid under the following conditions:
- Operating time/day = 8 h (100% OT)
- Duty class I for up to 10 switching operations/h
- Mounting positions and designs in this catalogue
- Standard lubricant
- T_{amb} = 20 °C for gearboxes,
  T_{amb} = 40 °C for motors (in accordance with EN 60034)
- Site altitude < = 1000 m amsl
- The selection tables provide the permissible mechanical powers and torques. For notes on the thermal power limit, see chapter drive dimensioning.
- The rated power specified for motors and geared motors applies to operating mode S1 (in accordance with EN 60034).

Under different operating conditions, the values obtained may vary from those listed here.
In the case of extreme operating conditions, please consult your Lenze sales office.



Dimensioning

Thermal power limit

The thermal power limit, defined by the heat balance, limits the permissible gearbox continuous power. It may be less than the mechanical power ratings listed in the selection tables.

The thermal power limit is affected by:
- the churning losses in the lubricant. These are determined by the mounting position and the circumferential speed of the wheels
- the load and the speed
- the ambient conditions: temperature, air circulation, input or dissipation via shafts and the foundation

Please consult your Lenze sales office
- if the following input speeds n_1 are exceeded on a continuous basis (continuous is defined as more than 8 h/day):

Motor frame size	Mounting position A, B, E, F	Mounting position C, D
063 ... 100	3000 r/min	3000 r/min
112 ... 132	3000 r/min	1500 r/min
160 ... 225	2000 r/min	1500 r/min

- if the following input speeds n_1 are exceeded:

Motor frame size	Mounting position A, B, E, F	Mounting position C, D
063 ... 100	4000 r/min	3000 r/min
112 ... 132	4000 r/min	2000 r/min
160 ... 225	3000 r/min	1500 r/min

- or if you are using the following gearbox type, size and ratio combinations at an input speed of n_1 > 1500 r/min:

Gearbox type	Gearbox size	Ratio i
GKS helical-bevel gearbox	07, 09, 11, 14	≤ 25

Possible ways of extending the application area

- synthetic lubricant (option)
- shaft sealing rings made from FP material/Viton (option)
- reduction in lubricant quantity
- cooling of the geared motor by means of air convection on the machine/system



Dimensioning

Load capacity and application factor

Load capacity c of gearbox
Rated value for the load capacity of Lenze geared motors.
- c is the ratio of the permissible rated torque of the gearbox to the rated torque supplied by the drive component (e.g. the built-in Lenze motor).
- The value of c must always be greater than the value of the application factor k calculated for the application.

Application factor k (according to DIN 3990)
Takes into account the influence of temporally variable loads which are actually present during the anticipated operating time of gearboxes and geared motors.
k is determined by:
- the type of load
- the load intensity
- temporal influences

Duty class	Load type
I	Smooth operation, small or light jolts
II	Uneven operation, average jolts
III	Uneven operation, severe jolts and/or alternating load

Application factor k

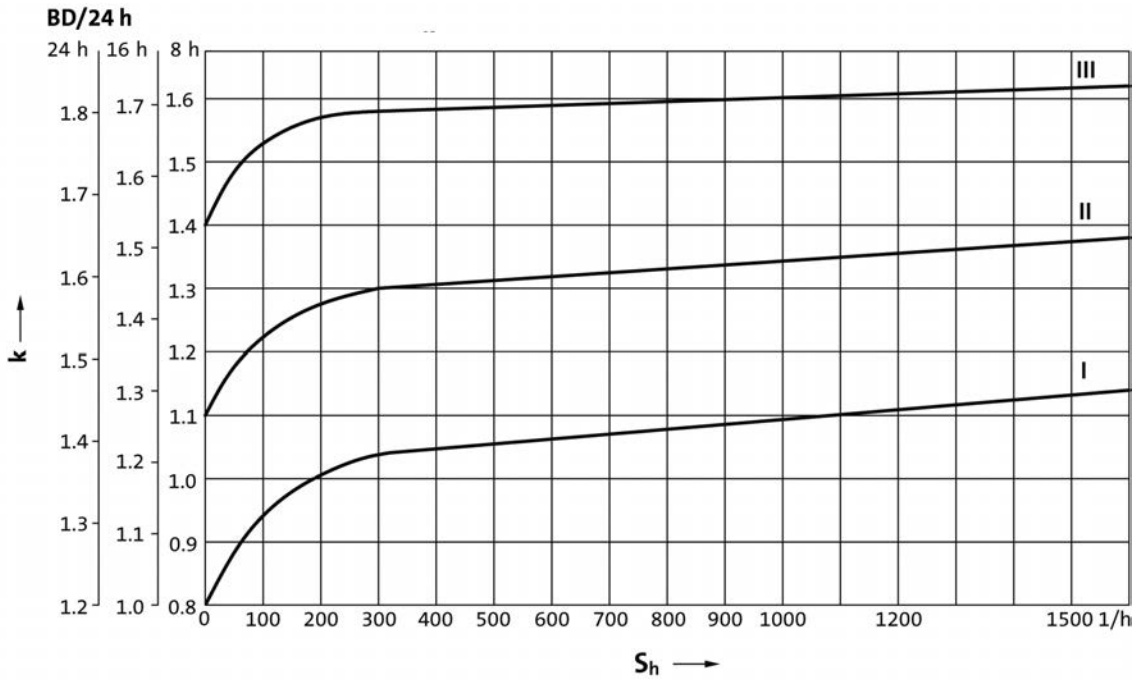

6.9



Dimensioning

Torque derating at low motor frequencies

Motor size-dependent torque reduction, taking into account the thermal response during operation on the inverter.

Torque characteristics

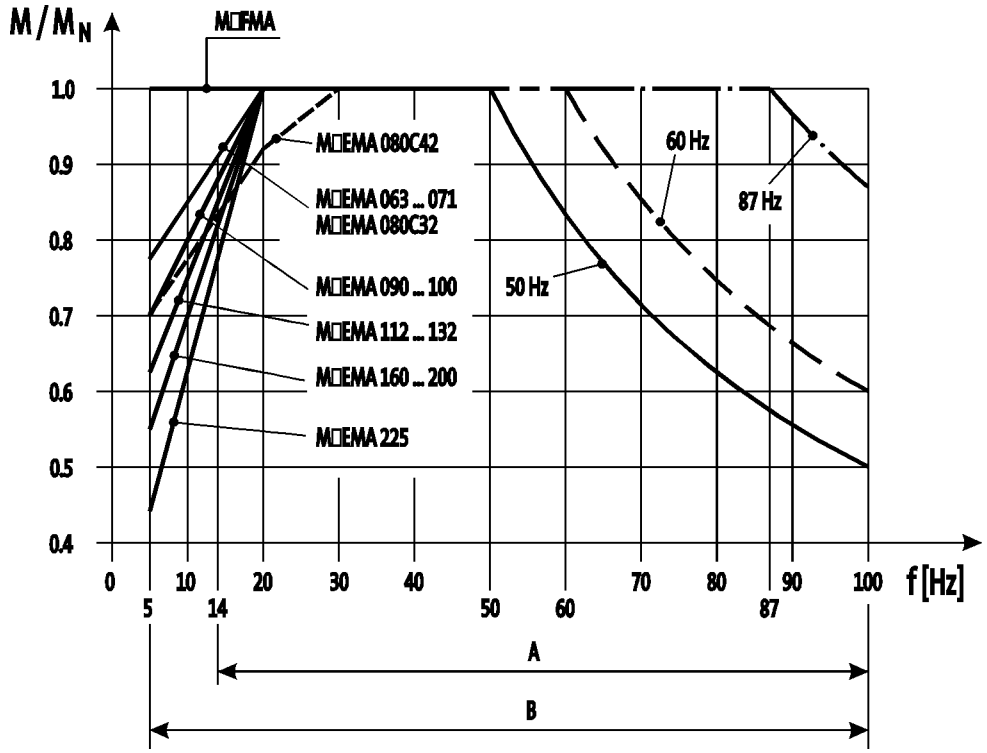

A = Operation with integral fan and brake
B = Operation with integral fan and brake control "Holding current reduction"

You can use the Drive Solution Designer for precise drive dimensioning.

The Drive Solution Designer helps you to carry out a fast and high-quality drive dimensioning.
The software includes well-founded and proven knowledge on drive applications and electro-mechanical drive components.

Please contact your Lenze sales office.



Dimensioning

Notes on the selection tables

The selection tables show the available combinations of gearbox type, number of stages, ratio and motor. They are used only to provide basic orientation.
The following legend indicates the structure of the selection tables.

Gearbox type

GST helical gearbox



Technical data

Selection tables

Rated speed n_N of the drive motor

Product key of geared motor

Rated power P_N of the drive motor in relation to the rated frequency

► 50 Hz, 60 Hz: P_N = 0.75 kW

n_N	1410 r/min			1720 r/min			i		
f_N	50 Hz			60 Hz					
	n_2 [r/min]	M_2 [Nm]	c	n_2 [r/min]	M_2 [Nm]	c			
	881	8.0	2.4	1069	6.6	2.8	1.600	GST04-1M □□□080C32	76
	689	10	2.2	835	8.4	2.6	2.048	GST04-1M □□□080C32	76

Output speed n_2

Output torque M_2 (constant for all listed frequencies)

The load capacity c of the gearbox c is the ratio of the gearbox's rated torque to the rated torque of the three-phase motor (calculated in respect of its application to the output shaft). c must always be greater than the application factor k determined for the application

Ratio i

Page number for dimensions

$$c = \frac{M_{2,zul}}{M_{1N} \cdot i \cdot \eta_{Getr}} > k$$



Dimensioning

Notes on the selection tables

Motor voltages

The power values and torques indicated in the selection tables relate to the following motor voltages:
- 50 Hz : Δ 230 V / Y 400 V
- 60 Hz : 230 V or 460 V
- 87 Hz : Δ 400 V

Operation at 87 Hz

In 87 Hz operation, the three-phase AC motor (which is designed for a voltage of Δ 230 V / Y 400 V at 50 Hz) is operated on an inverter with 400 V rated voltage in a delta connection. It is important to note here that the inverter must be configured for 87Hz output.
This offers the following advantages over 50 Hz operation:
- the setting range of the motor is increased by a factor of 1.73.
- the motor can then provide around 1.73 times greater output, which in turn allows a smaller and more affordable motor to be selected for the application.
- the efficiency of the motor is also improved.



Notes on ordering

We want to be sure that you receive the correct products in good time.

To allow us to achieve this we need:
- your address and your company data
- our product key for the individual products in this catalogue
- your delivery date and delivery address

Ordering procedure
Please use the ordering information checklist to ensure that you provide all the ordering information required for the various products.

The ordering information checklist, the product key, the basic versions, options, mounting position and position of the system blocks will be found in the General – Product key section.

A list of Lenze's worldwide sales offices can be found on the Internet: www.Lenze.com.



Ordering details checklist

☐ **Offer**

Page __ of __

☐ **Order**

Customer No.

Job No.

Fax No. _____

Sender

Company _____ Made out by (name) _____

Street/P.O. Box _____ Department _____

P.O. Box, City _____ Telephone No. _____

Date _____ Signature _____

Delivery address (if different)

Street/P.O. Box _____ Desired delivery date _____

P.O. Box, City _____ Dispatching notes _____

Invoice recipient (if different)

Street/P.O. Box _____

Postal code, City _____



Ordering details checklist

Customer No.

Job No.

Page __

Quantity

Efficiency class ☐ Standard efficiency ☐ High efficiency (IE2)

Rated frequency ☐ 50 Hz ☐ 60 Hz ☐ 87 Hz

Ratio i

GKS ☐☐ – 3 / 4 M / E V / H / S A / B R / K

Motor frame size ☐☐☐C☐☐

Hollow shaft d = ☐ mm

Flange a_2 = ☐ mm

Mounting position A B C D E F

Position of system blocks

Shaft/shrink disc: 0 3 4 8

Flange: 0 3 5 8

Terminal box: 2 3 4 5

Surface and corrosion protection ☐ OKS-S colour: RAL 7012 ☐ OKS-G (primed)

Options

Special lubricants ☐ CLP HC 320 (synthetic) ☐ CLP HC 220 USDA H1 (for the food industry)

Surface and corrosion protection ☐ OKS-S (small) ☐ OKS-M (medium) RAL ☐ OKS-L (high) ☐ OKS-G (primed)

Accessories ☐ Torque support for housing foot ☐ Torque support for threaded pitch circle ☐ 2nd output shaft end ☐ Mounting set for hollow-shaft circlip ☐ Shrink disc cover ☐ Hollow shaft cover, hoseproof

Shaft sealing rings ☐ Viton

Breathing ☐ Breather elements for GKS05 ☐ Compensation reservoir in mounting position for GKS09 ... 14-3



Ordering details checklist

Three-phase AC motors options

Customer No. ☐☐☐☐☐☐☐☐

Job No. ☐☐☐☐☐☐☐☐☐☐

Page __

Motor connection

Terminal box
- ☐ with plug-in connector ICN 6-pin. Adhere to permissible rated motor current 20 A!
- ☐ with plug-in connector ICN 8-pin. Adhere to permissible rated motor current 20 A!
- ☐ with plug-in connector HAN10E. Adhere to permissible rated current 16 A!
- ☐ with plug-in connector HAN-Modular. Adhere to permissible rated current 16 / 40 A!

Cable entry
only with M□□MAXX/LL063 ... 132
or terminal box with plug-in connector
in position 1 ☐ 2 ☐ 3 ☐ 4 ☐ 5 ☐

Blower

☐ 1~ ☐ 3~

☐ Terminal box with plug-in connector ICN

Terminal box position 2 ☐ 3 ☐ 4 ☐ 5 ☐

Spring-applied brake

Brake version ☐ Standard ☐ Longlife

Brake size ☐

Characteristic torque ☐ Nm

Rated voltage AC ☐ DC ☐ ☐ V

Rectifier
Only in the case of AC supply voltage

- ☐ Half-wave rectifier
- ☐ Bridge rectifier
- ☐ Bridge/half-wave rectifier (overexcitation)
- ☐ Bridge/half-wave rectifier (holding current reduction)

Brake options
Manual release lever in position 2 ☐ 3 ☐ 4 ☐ 5 ☐

☐ Low-noise version (Standard in the case of brake with speed/position encoder)

6.9



Ordering details checklist

Three-phase AC motors options

Customer No. ☐☐☐☐☐☐☐☐

Job No. ☐☐☐☐☐☐☐☐☐☐

Page __

Speed/position encoder

Resolver	☐ RS1				
Incremental encoder HTL	☐ IG128-24V-H	☐ IG512-24V-H	☐ IG1024-24V-H	☐ IG2048-24V-H	
Incremental encoder TTL		☐ IG512-5V-T	☐ IG1024-5V-T	☐ IG2048-5V-T	
Feedback with ICN connector	☐ IG128-24V-H not possible with plug-in connector!				

Motor protection

☐ PTC ☐ KTY 83-110 ☐ KTY 84-130

Approval

☐ UL/CSA approval: cURus ☐ CCC ☐ China Energy Label

Further options

Indication of supply voltage only for motor frame sizes 112C32 to 225C22

☐ Δ; 400V-50Hz; 460V-60Hz

☐ Y/Δ; 400/230V-50Hz; 460/265V-60Hz (-/400V-87Hz possible in operation with frequency inverter)

☐ Protection cover

☐ 2nd shaft end

☐ Handwheel

☐ Increased centrifugal mass

☐ 2nd nameplate (adhesive nameplate/metal nameplate)





Permissible radial and axial forces at output

Permissible radial force
$F_{rad,per} = \min(f_w \times f_\alpha \times F_{rad,max}$; $f_w \times F_{rad,max}$ at $n_2 \leq 16$ r/min)

Permissible axial force
$F_{ax,per} = F_{ax,max}$ if $F_{rad} = 0$

If F_{rad} **and** $F_{ax} \neq 0$, please contact your Lenze sales office.

Application of forces

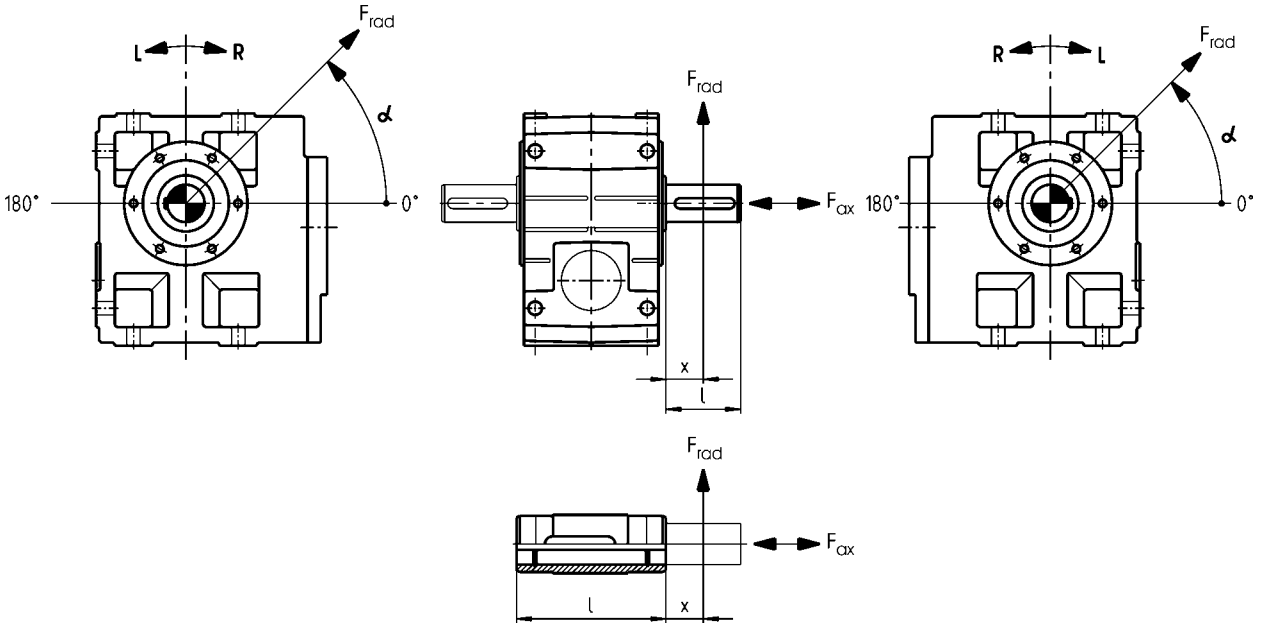

Effective direction factor f_α at output shaft

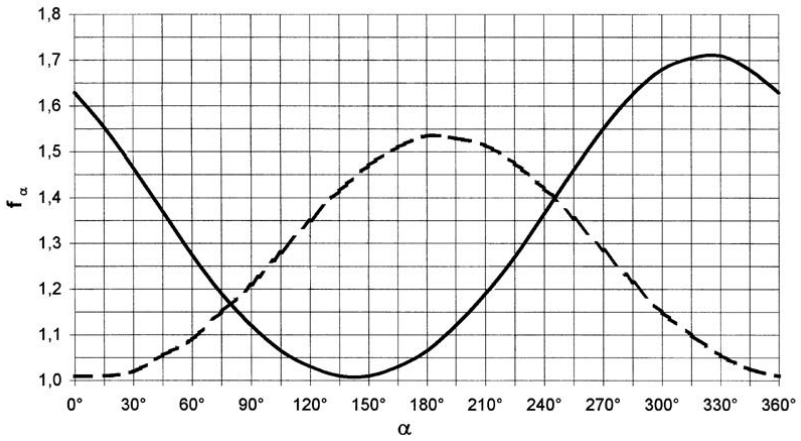

——— Direction of rotation R
— — — Direction of rotation L



Permissible radial and axial forces at output

Additional load factor f_w at output shaft

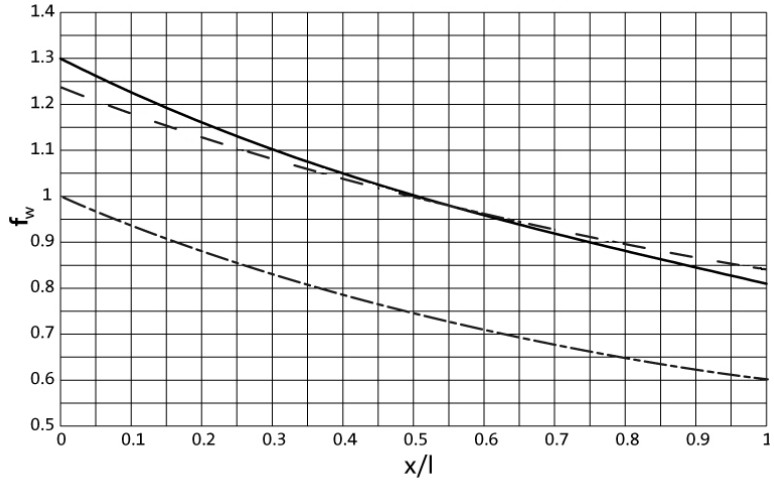

——— Solid shaft (V□□)
— · — Hollow shaft (H□□)
— — — Solid shaft with flange (V□K)

GKS□□-3/4□ H□□

Size	n_2 [r/min]								
Gearbox	630	400	250	160	100	63	40	25	≤16

	Max. radial force, Hollow shaft								
	$F_{rad,max}$	$F_{rad,max}$	$F_{rad,max}$	$F_{rad,max}$	$F_{rad,max}$	$F_{rad,max}$	$F_{rad,max}$	$F_{rad,max}$	$F_{rad,max}$
	[N]	[N]	[N]	[N]	[N]	[N]	[N]	[N]	[N]
GKS04	3100	3900	4500	5100	5900	6800	7000	7000	7000
GKS05	2400	3500	4200	4630	5000	6200	7300	7300	7300
GKS06	3000	4600	5600	6400	7000	8200	10400	12000	12000
GKS07		5400	6300	7400	8700	10500	12500	15100	16000
GKS09		7500	8200	9400	10600	12200	15500	21000	24000
GKS11		9000	10000	11000	14000	16000	18500	25000	30000
GKS14		15000	15500	16500	17500	18500	21000	28000	40000

	Max. axial force, Hollow shaft								
	$F_{ax,max}$	$F_{ax,max}$	$F_{ax,max}$	$F_{ax,max}$	$F_{ax,max}$	$F_{ax,max}$	$F_{ax,max}$	$F_{ax,max}$	$F_{ax,max}$
	[N]	[N]	[N]	[N]	[N]	[N]	[N]	[N]	[N]
GKS04	3300	4200	5000	5500	5500	5500	5500	5500	5500
GKS05	2800	3500	4240	5090	6160	6600	6600	6600	6600
GKS06	3500	4440	5580	6930	8710	10000	10000	10000	10000
GKS07		4900	6230	7820	9940	12600	14000	14000	14000
GKS09		6500	7400	8000	10500	13000	17000	21000	21000
GKS11		7000	8000	9200	12000	14500	18500	27000	27000
GKS14		6000	8000	10000	13000	16000	20000	28000	35000

- Application of force F_{rad}: at hollow shaft end face (x = 0)
- $F_{ax,max}$ only valid with F_{rad} = 0
- Neither radial nor axial forces are permissible for the hollow shaft with shrink disc (S□□).



Permissible radial and axial forces at output

GKS□□-3/4□ V□R

Size	n_2 [r/min]								
Gearbox	630	400	250	160	100	63	40	25	≤16

	Max. radial force, Solid shaft without flange								
	$F_{rad,max}$	$F_{rad,max}$	$F_{rad,max}$	$F_{rad,max}$	$F_{rad,max}$	$F_{rad,max}$	$F_{rad,max}$	$F_{rad,max}$	$F_{rad,max}$
	[N]	[N]	[N]	[N]	[N]	[N]	[N]	[N]	[N]
GKS04	2400	3000	3400	3600	3600	3600	3600	3600	3600
GKS05	2200	2800	3200	3600	4100	4900	5800	5800	5800
GKS06	2700	3700	4300	4900	5300	6200	7900	9000	9000
GKS07		4000	4900	5800	6600	8000	9600	12000	12000
GKS09 [1]		6200	6400	7100	8400	9500	11800	16000	18000
GKS11 [1]		7100	7500	8200	10000	11200	13000	19000	23000
GKS14		57900	61000	64100	65000	65000	65000	65000	65000

	Max. axial force, Solid shaft without flange								
	$F_{ax,max}$	$F_{ax,max}$	$F_{ax,max}$	$F_{ax,max}$	$F_{ax,max}$	$F_{ax,max}$	$F_{ax,max}$	$F_{ax,max}$	$F_{ax,max}$
	[N]	[N]	[N]	[N]	[N]	[N]	[N]	[N]	[N]
GKS04	3300	4200	5000	5500	5500	5500	5500	5500	5500
GKS05	2800	3500	4240	5090	6160	6600	6600	6600	6600
GKS06	3500	4440	5580	6930	8710	10000	10000	10000	10000
GKS07		4900	6230	7820	9940	12600	14000	14000	14000
GKS09 [1]		6500	7400	8000	10500	13000	17000	21000	21000
GKS11 [1]		7000	8000	9200	12000	14500	18500	27000	27000
GKS14		35000	35000	35000	35000	35000	35000	35000	35000

[1] Reinforced output shaft bearings are available on request for V□R versions.

- Application of force F_{rad}: centre of shaft journal (x = l/2)
- $F_{ax,max}$ only valid with F_{rad} = 0



Permissible radial and axial forces at output

GKS□□-3/4□ V□K

Size	n_2 [r/min]								
Gearbox	630	400	250	160	100	63	40	25	≤16

	Max. radial force, Solid shaft with flange								
	$F_{rad,max}$	$F_{rad,max}$	$F_{rad,max}$	$F_{rad,max}$	$F_{rad,max}$	$F_{rad,max}$	$F_{rad,max}$	$F_{rad,max}$	$F_{rad,max}$
	[N]	[N]	[N]	[N]	[N]	[N]	[N]	[N]	[N]
GKS04	3100	3800	4300	4600	4600	4600	4600	4600	4600
GKS05	3800	4640	5420	6280	7000	7000	7000	7000	7000
GKS06	4700	6400	7500	8800	9800	10000	10000	10000	10000
GKS07		7000	8250	9630	11000	13000	14000	14000	14000
GKS09		9900	10500	12000	14000	15000	15000	15000	15000
GKS11		14500	16000	17600	21000	24500	28000	30000	30000
GKS14		20500	23700	27200	31300	35000	41000	43000	43000

	Max. axial force, Solid shaft with flange								
	$F_{ax,max}$	$F_{ax,max}$	$F_{ax,max}$	$F_{ax,max}$	$F_{ax,max}$	$F_{ax,max}$	$F_{ax,max}$	$F_{ax,max}$	$F_{ax,max}$
	[N]	[N]	[N]	[N]	[N]	[N]	[N]	[N]	[N]
GKS04	3300	4200	4400	4400	4400	4400	4400	4400	4400
GKS05	2900	3630	4440	5420	6600	6600	6600	6600	6600
GKS06	3700	4660	5880	7320	9230	10000	10000	10000	10000
GKS07		5700	7000	8500	10400	11500	11500	11500	11500
GKS09		6000	6600	7600	10000	12000	15000	17000	17000
GKS11		7000	7500	8500	10500	13000	17500	27000	27000
GKS14		8400	10000	11500	13000	15000	19000	28000	35000

- Application of force F_{rad}: centre of shaft journal (x = l/2)
- $F_{ax,max}$ only valid with F_{rad} = 0



Output backlash in angular minutes

► Backlash ϕ depending on ratio i

GKS04 to 14-3

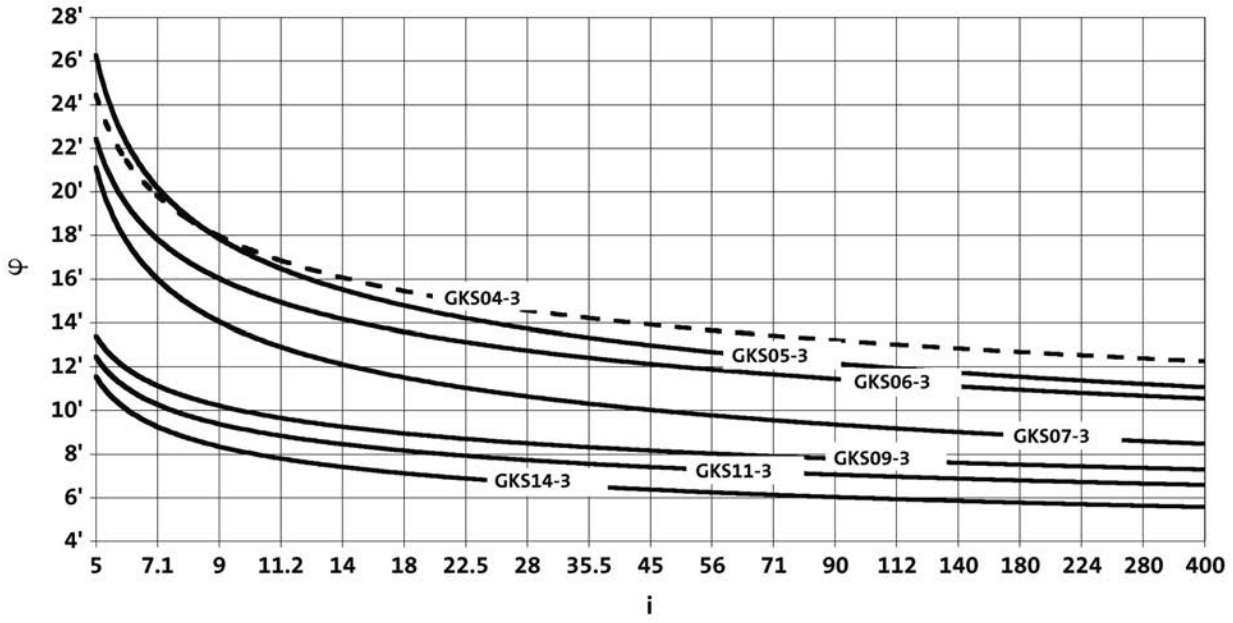

GKS05 to 14-4

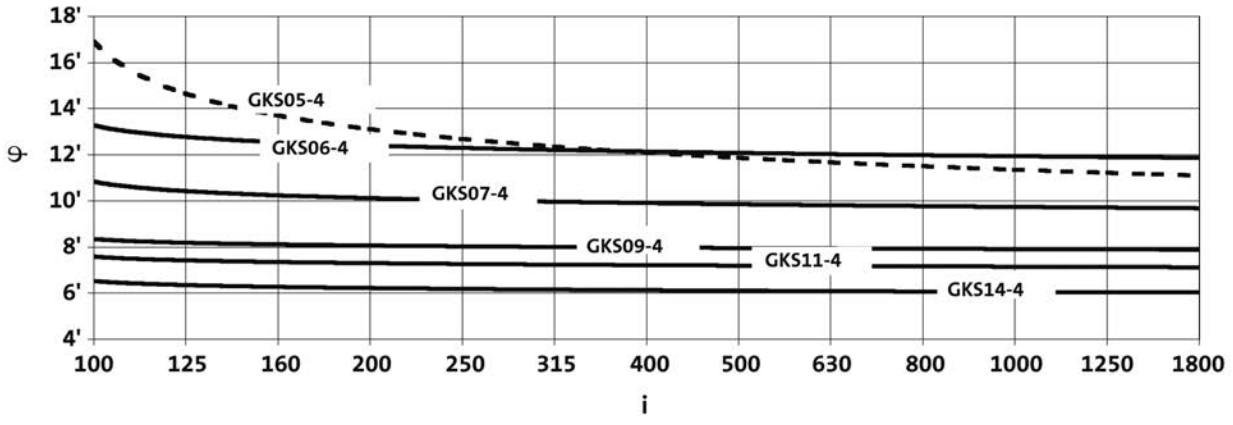

6.9



Moments of inertia

GKS□□-3

► Moment of inertia (J) depending on ratio i

Gearbox			GKS04
5.123	J	[kgcm²]	1.170
7.025	J	[kgcm²]	0.676
8.167	J	[kgcm²]	0.863
8.991	J	[kgcm²]	0.444
11.730	J	[kgcm²]	0.729
13.067	J	[kgcm²]	0.701
14.333	J	[kgcm²]	0.346
16.087	J	[kgcm²]	0.443
17.920	J	[kgcm²]	0.428
20.588	J	[kgcm²]	0.302
22.522	J	[kgcm²]	0.262
25.088	J	[kgcm²]	0.254
28.727	J	[kgcm²]	0.182
32.000	J	[kgcm²]	0.177
35.191	J	[kgcm²]	0.136
39.200	J	[kgcm²]	0.132
44.240	J	[kgcm²]	0.090
50.943	J	[kgcm²]	0.181
56.976	J	[kgcm²]	0.061
64.978	J	[kgcm²]	0.132
72.210	J	[kgcm²]	0.040
79.598	J	[kgcm²]	0.103
90.491	J	[kgcm²]	0.027
100.067	J	[kgcm²]	0.069
111.467	J	[kgcm²]	0.069
128.874	J	[kgcm²]	0.048
143.556	J	[kgcm²]	0.048
163.332	J	[kgcm²]	0.032
181.939	J	[kgcm²]	0.032
204.682	J	[kgcm²]	0.022
228.000	J	[kgcm²]	0.022
269.660	J	[kgcm²]	0.014
300.381	J	[kgcm²]	0.014

Gearbox			GKS05
6.863	J	[kgcm²]	1.900
9.412	J	[kgcm²]	1.170
10.569	J	[kgcm²]	1.600
11.667	J	[kgcm²]	1.647
13.176	J	[kgcm²]	0.711
14.494	J	[kgcm²]	1.045
16.000	J	[kgcm²]	1.040
17.054	J	[kgcm²]	1.505
19.216	J	[kgcm²]	1.474
23.388	J	[kgcm²]	0.964
26.353	J	[kgcm²]	0.948
29.931	J	[kgcm²]	0.674
32.744	J	[kgcm²]	0.584
36.894	J	[kgcm²]	0.576
41.765	J	[kgcm²]	0.419
47.059	J	[kgcm²]	0.414
51.162	J	[kgcm²]	0.321
57.647	J	[kgcm²]	0.317
66.592	J	[kgcm²]	0.200
75.033	J	[kgcm²]	0.198
82.833	J	[kgcm²]	0.145
93.333	J	[kgcm²]	0.144
107.196	J	[kgcm²]	0.091
120.784	J	[kgcm²]	0.091
130.097	J	[kgcm²]	0.067
146.588	J	[kgcm²]	0.066
166.276	J	[kgcm²]	0.043
187.353	J	[kgcm²]	0.042
211.200	J	[kgcm²]	0.081
227.484	J	[kgcm²]	0.060
256.320	J	[kgcm²]	0.060
290.745	J	[kgcm²]	0.038
327.600	J	[kgcm²]	0.038

► The moments of inertia relate to the drive shaft of the gearbox.
► The total moment of inertia is calculated by adding the values of the gearbox, motor and accessories.



Moments of inertia

GKS□□-3

► Moment of inertia (J) depending on ratio i

Gearbox			GKS06
6.485	J	[kgcm²]	5.870
9.196	J	[kgcm²]	5.048
10.147	J	[kgcm²]	4.858
11.382	J	[kgcm²]	2.492
12.612	J	[kgcm²]	3.199
14.824	J	[kgcm²]	4.287
16.699	J	[kgcm²]	4.163
17.809	J	[kgcm²]	2.126
20.329	J	[kgcm²]	2.794
22.902	J	[kgcm²]	2.729
26.017	J	[kgcm²]	1.941
28.461	J	[kgcm²]	1.666
32.063	J	[kgcm²]	1.632
36.303	J	[kgcm²]	1.183
41.472	J	[kgcm²]	2.110
44.471	J	[kgcm²]	0.900
53.074	J	[kgcm²]	1.523
57.882	J	[kgcm²]	0.578
65.207	J	[kgcm²]	0.570
72.000	J	[kgcm²]	0.422
81.111	J	[kgcm²]	0.416
93.176	J	[kgcm²]	0.257
104.967	J	[kgcm²]	0.254
113.082	J	[kgcm²]	0.189
127.392	J	[kgcm²]	0.186
142.941	J	[kgcm²]	0.122
161.029	J	[kgcm²]	0.121
190.080	J	[kgcm²]	0.227
214.133	J	[kgcm²]	0.226
230.688	J	[kgcm²]	0.168
259.880	J	[kgcm²]	0.167
291.600	J	[kgcm²]	0.109
328.500	J	[kgcm²]	0.109

Gearbox			GKS07
5.955	J	[kgcm²]	19.300
8.254	J	[kgcm²]	11.800
9.171	J	[kgcm²]	16.000
10.124	J	[kgcm²]	15.882
11.378	J	[kgcm²]	7.019
12.711	J	[kgcm²]	10.164
14.798	J	[kgcm²]	14.306
16.674	J	[kgcm²]	13.965
17.270	J	[kgcm²]	7.258
20.511	J	[kgcm²]	9.084
23.111	J	[kgcm²]	8.906
25.244	J	[kgcm²]	6.716
28.274	J	[kgcm²]	5.567
31.858	J	[kgcm²]	5.473
36.063	J	[kgcm²]	3.650
40.906	J	[kgcm²]	6.934
44.178	J	[kgcm²]	2.779
50.345	J	[kgcm²]	5.298
57.501	J	[kgcm²]	1.748
64.790	J	[kgcm²]	1.725
70.474	J	[kgcm²]	1.295
79.407	J	[kgcm²]	1.280
92.563	J	[kgcm²]	0.808
104.296	J	[kgcm²]	0.799
112.338	J	[kgcm²]	0.592
126.578	J	[kgcm²]	0.586
140.548	J	[kgcm²]	1.113
158.364	J	[kgcm²]	1.113
184.600	J	[kgcm²]	0.687
208.000	J	[kgcm²]	0.685
224.037	J	[kgcm²]	0.510
252.436	J	[kgcm²]	0.509
283.193	J	[kgcm²]	0.330
319.091	J	[kgcm²]	0.329

► The moments of inertia relate to the drive shaft of the gearbox.
► The total moment of inertia is calculated by adding the values of the gearbox, motor and accessories.



Moments of inertia

GKS□□-3

► Moment of inertia (J) depending on ratio i

Gearbox			GKS09
12.283	J	[kgcm²]	34.200
13.360	J	[kgcm²]	33.400
16.122	J	[kgcm²]	22.600
17.536	J	[kgcm²]	22.200
19.541	J	[kgcm²]	30.600
22.022	J	[kgcm²]	29.900
25.649	J	[kgcm²]	20.500
29.228	J	[kgcm²]	15.900
32.940	J	[kgcm²]	15.600
35.193	J	[kgcm²]	12.200
39.662	J	[kgcm²]	12.000
43.146	J	[kgcm²]	9.000
48.625	J	[kgcm²]	8.870
58.456	J	[kgcm²]	5.540
65.879	J	[kgcm²]	5.470
70.982	J	[kgcm²]	4.140
79.996	J	[kgcm²]	4.100
91.860	J	[kgcm²]	2.630
103.524	J	[kgcm²]	2.610
111.484	J	[kgcm²]	1.920
125.641	J	[kgcm²]	1.900
140.921	J	[kgcm²]	1.260
158.816	J	[kgcm²]	1.250
182.000	J	[kgcm²]	2.250
205.111	J	[kgcm²]	2.240
220.882	J	[kgcm²]	1.660
248.930	J	[kgcm²]	1.650
279.205	J	[kgcm²]	1.100
314.659	J	[kgcm²]	1.100

Gearbox			GKS11
12.094	J	[kgcm²]	104.000
13.154	J	[kgcm²]	101.000
15.874	J	[kgcm²]	68.000
17.265	J	[kgcm²]	66.500
19.515	J	[kgcm²]	90.300
21.989	J	[kgcm²]	90.400
25.615	J	[kgcm²]	61.200
28.021	J	[kgcm²]	52.200
31.573	J	[kgcm²]	51.300
35.741	J	[kgcm²]	36.800
40.272	J	[kgcm²]	36.200
43.783	J	[kgcm²]	27.900
49.333	J	[kgcm²]	27.500
57.683	J	[kgcm²]	17.700
64.995	J	[kgcm²]	17.500
70.887	J	[kgcm²]	13.000
79.873	J	[kgcm²]	12.900
91.737	J	[kgcm²]	8.300
103.365	J	[kgcm²]	8.210
111.335	J	[kgcm²]	6.050
125.448	J	[kgcm²]	5.990
140.732	J	[kgcm²]	3.960
158.571	J	[kgcm²]	3.930
186.572	J	[kgcm²]	7.070
210.222	J	[kgcm²]	7.050
226.431	J	[kgcm²]	5.210
255.133	J	[kgcm²]	5.200
286.219	J	[kgcm²]	3.440
322.500	J	[kgcm²]	3.430

► The moments of inertia relate to the drive shaft of the gearbox.
► The total moment of inertia is calculated by adding the values of the gearbox, motor and accessories.



Moments of inertia

GKS□□-3

► Moment of inertia (J) depending on ratio i

Gearbox			GKS14
12.435	J	[kgcm²]	283.000
13.525	J	[kgcm²]	275.000
16.646	J	[kgcm²]	198.000
18.311	J	[kgcm²]	173.000
20.065	J	[kgcm²]	249.000
22.609	J	[kgcm²]	243.000
24.696	J	[kgcm²]	183.000
27.165	J	[kgcm²]	159.000
30.609	J	[kgcm²]	156.000
34.692	J	[kgcm²]	111.000
39.089	J	[kgcm²]	109.000
42.531	J	[kgcm²]	82.400
47.923	J	[kgcm²]	81.100
56.251	J	[kgcm²]	54.200
63.382	J	[kgcm²]	53.500
68.942	J	[kgcm²]	38.900
77.681	J	[kgcm²]	38.400
90.551	J	[kgcm²]	25.100
102.029	J	[kgcm²]	24.900
109.896	J	[kgcm²]	18.300
123.826	J	[kgcm²]	18.100
138.913	J	[kgcm²]	12.000
156.522	J	[kgcm²]	11.900
186.572	J	[kgcm²]	21.600
210.222	J	[kgcm²]	21.500
226.431	J	[kgcm²]	15.900
255.133	J	[kgcm²]	15.800
286.219	J	[kgcm²]	10.500
322.500	J	[kgcm²]	10.500

► The moments of inertia relate to the drive shaft of the gearbox.
► The total moment of inertia is calculated by adding the values of the gearbox, motor and accessories.



Moments of inertia

GKS□□-4

► Moment of inertia (J) depending on ratio i

Gearbox			GKS05
95.238	J	[kgcm²]	0.143
114.987	J	[kgcm²]	0.196
126.933	J	[kgcm²]	0.196
146.667	J	[kgcm²]	0.142
161.905	J	[kgcm²]	0.141
185.547	J	[kgcm²]	0.195
209.067	J	[kgcm²]	0.195
225.867	J	[kgcm²]	0.073
236.667	J	[kgcm²]	0.141
289.917	J	[kgcm²]	0.108
326.667	J	[kgcm²]	0.108
364.467	J	[kgcm²]	0.073
410.667	J	[kgcm²]	0.073
469.389	J	[kgcm²]	0.050
510.000	J	[kgcm²]	0.023
528.889	J	[kgcm²]	0.050
594.894	J	[kgcm²]	0.033
670.303	J	[kgcm²]	0.033
820.760	J	[kgcm²]	0.050
924.800	J	[kgcm²]	0.050
1040.215	J	[kgcm²]	0.033
1172.073	J	[kgcm²]	0.033
1303.560	J	[kgcm²]	0.023
1468.800	J	[kgcm²]	0.023
1717.389	J	[kgcm²]	0.014
1935.086	J	[kgcm²]	0.014

Gearbox			GKS06
103.721	J	[kgcm²]	0.300
113.205	J	[kgcm²]	0.234
127.059	J	[kgcm²]	0.264
140.816	J	[kgcm²]	0.213
155.647	J	[kgcm²]	0.191
174.336	J	[kgcm²]	0.112
202.588	J	[kgcm²]	0.168
224.524	J	[kgcm²]	0.074
252.000	J	[kgcm²]	0.155
279.286	J	[kgcm²]	0.069
316.800	J	[kgcm²]	0.102
361.429	J	[kgcm²]	0.064
408.000	J	[kgcm²]	0.068
458.067	J	[kgcm²]	0.042
517.091	J	[kgcm²]	0.044
555.927	J	[kgcm²]	0.041
640.800	J	[kgcm²]	0.062
696.668	J	[kgcm²]	0.028
812.137	J	[kgcm²]	0.040
914.907	J	[kgcm²]	0.040
1017.741	J	[kgcm²]	0.028
1146.529	J	[kgcm²]	0.028
1340.834	J	[kgcm²]	0.017
1510.507	J	[kgcm²]	0.017

► The moments of inertia relate to the drive shaft of the gearbox.
► The total moment of inertia is calculated by adding the values of the gearbox, motor and accessories.



Moments of inertia

GKS□□-4

► Moment of inertia (J) depending on ratio i

Gearbox			GKS07
103.039	J	[kgcm²]	0.837
112.391	J	[kgcm²]	0.632
126.222	J	[kgcm²]	0.729
137.748	J	[kgcm²]	0.571
154.622	J	[kgcm²]	0.527
179.201	J	[kgcm²]	0.283
201.254	J	[kgcm²]	0.454
222.909	J	[kgcm²]	0.199
246.659	J	[kgcm²]	0.417
273.199	J	[kgcm²]	0.184
321.049	J	[kgcm²]	0.256
358.829	J	[kgcm²]	0.169
399.353	J	[kgcm²]	0.182
464.367	J	[kgcm²]	0.106
516.810	J	[kgcm²]	0.113
563.572	J	[kgcm²]	0.101
636.581	J	[kgcm²]	0.161
683.972	J	[kgcm²]	0.074
823.810	J	[kgcm²]	0.101
928.237	J	[kgcm²]	0.101
999.806	J	[kgcm²]	0.073
1126.542	J	[kgcm²]	0.073
1277.842	J	[kgcm²]	0.047
1439.822	J	[kgcm²]	0.047

Gearbox			GKS09
100.551	J	[kgcm²]	2.480
113.320	J	[kgcm²]	2.456
123.275	J	[kgcm²]	2.107
138.929	J	[kgcm²]	2.091
151.012	J	[kgcm²]	1.516
170.188	J	[kgcm²]	1.505
204.596	J	[kgcm²]	1.244
230.577	J	[kgcm²]	1.239
248.439	J	[kgcm²]	1.128
279.986	J	[kgcm²]	1.125
323.365	J	[kgcm²]	0.713
364.427	J	[kgcm²]	0.710
402.234	J	[kgcm²]	0.509
453.311	J	[kgcm²]	0.507
520.538	J	[kgcm²]	0.466
586.638	J	[kgcm²]	0.465
631.744	J	[kgcm²]	0.443
711.965	J	[kgcm²]	0.443
817.551	J	[kgcm²]	0.276
921.367	J	[kgcm²]	0.276
992.209	J	[kgcm²]	0.201
1118.204	J	[kgcm²]	0.201
1254.197	J	[kgcm²]	0.130
1413.461	J	[kgcm²]	0.130

► The moments of inertia relate to the drive shaft of the gearbox.
► The total moment of inertia is calculated by adding the values of the gearbox, motor and accessories.



Moments of inertia

GKS□□-4

► Moment of inertia (J) depending on ratio i

Gearbox			GKS11
102.119	J	[kgcm²]	7.276
115.063	J	[kgcm²]	7.205
125.095	J	[kgcm²]	6.233
140.952	J	[kgcm²]	6.186
153.242	J	[kgcm²]	4.500
172.667	J	[kgcm²]	4.469
201.890	J	[kgcm²]	3.735
227.481	J	[kgcm²]	3.717
248.106	J	[kgcm²]	3.355
279.556	J	[kgcm²]	3.343
322.931	J	[kgcm²]	2.088
363.866	J	[kgcm²]	2.081
395.787	J	[kgcm²]	1.521
445.958	J	[kgcm²]	1.517
512.196	J	[kgcm²]	1.385
577.122	J	[kgcm²]	1.382
621.619	J	[kgcm²]	1.314
700.416	J	[kgcm²]	1.312
816.455	J	[kgcm²]	0.819
919.949	J	[kgcm²]	0.818
990.879	J	[kgcm²]	0.600
1116.484	J	[kgcm²]	0.599
1252.516	J	[kgcm²]	0.386
1411.286	J	[kgcm²]	0.385

Gearbox			GKS14
97.467	J	[kgcm²]	23.471
109.822	J	[kgcm²]	23.232
119.493	J	[kgcm²]	19.936
134.640	J	[kgcm²]	19.777
158.039	J	[kgcm²]	16.438
178.072	J	[kgcm²]	16.348
193.754	J	[kgcm²]	12.076
218.315	J	[kgcm²]	12.016
237.467	J	[kgcm²]	10.871
267.568	J	[kgcm²]	10.830
321.729	J	[kgcm²]	6.420
362.512	J	[kgcm²]	6.398
390.671	J	[kgcm²]	4.749
440.193	J	[kgcm²]	4.734
513.121	J	[kgcm²]	4.330
578.164	J	[kgcm²]	4.322
622.742	J	[kgcm²]	4.122
701.681	J	[kgcm²]	4.116
805.901	J	[kgcm²]	2.620
908.058	J	[kgcm²]	2.617
978.071	J	[kgcm²]	1.912
1102.052	J	[kgcm²]	1.909
1236.326	J	[kgcm²]	1.259
1393.043	J	[kgcm²]	1.258

► The moments of inertia relate to the drive shaft of the gearbox.
► The total moment of inertia is calculated by adding the values of the gearbox, motor and accessories.



Weights

GKS□□-3M HAR / HBR

			063C11 063C12	063C31	063C32	063C42	071C11 071C13 071C31 071C32 071C33 071C42	080C13 080C32 080C33	090C12	090C32	100C12	100C32
GKS04	m	[kg]	16	15	16		18	23	29	31		
GKS05	m	[kg]				26	28	33	39	41	47	49
GKS06	m	[kg]				40	42	47	53	55	61	64
GKS07	m	[kg]						73	79	81	87	89
GKS09	m	[kg]							127	129	135	138
GKS11	m	[kg]									235	237

			112C22	132C12	132C22	160C22	160C32	180C12	180C32	180C42	225C12	225C22
GKS06	m	[kg]	77	99	106							
GKS07	m	[kg]	102	125	132	175	190					
GKS09	m	[kg]	150	174	181	224	239	290	295			
GKS11	m	[kg]	249	272	279	322	337	388	393	413	612	632
GKS14	m	[kg]	420	440	447	490	505	556	561	581	779	799

► Weights with oil filling for mounting position A; all values are approximate.
The weights relate to the basic version. Bear in mind that additional weights may be needed, e.g. for motor options.



Weights

GKS□□-3M HAK

			063C11 063C12 063C31 063C32	063C42	071C11	071C13 071C31	071C32	071C33 071C42	080C13 080C32 080C33	090C12	090C32	100C12	100C32
GKS04	m	[kg]	18	19	20	21	20	21	26	31	33		
GKS05	m	[kg]		30	32				37	43	45	51	53
GKS06	m	[kg]		47	49				54	60	62	68	71
GKS07	m	[kg]							84	90	92	98	100
GKS09	m	[kg]								143	145	151	154
GKS11	m	[kg]										259	261

			112C22	132C12	132C22	160C22	160C32	180C12	180C32	180C42	225C12	225C22
GKS06	m	[kg]	84	106	113							
GKS07	m	[kg]	113	136	143	186	201					
GKS09	m	[kg]	166	190	197	240	255	306	311			
GKS11	m	[kg]	273	296	303	346	361	412	417	437	636	656
GKS14	m	[kg]	453	473	480	523	538	589	594	614	812	832

► Weights with oil filling for mounting position A; all values are approximate.
The weights relate to the basic version. Bear in mind that additional weights may be needed, e.g. for motor options.



Weights

GKS□□-3M VAR / VBR

			063C11 063C12 063C31 063C32	063C42	071C11	071C13 071C31	071C32	071C33 071C42	080C13 080C32 080C33	090C12	090C32	100C12	100C32
GKS04	m	[kg]	16	17	18	19	18	19	24	29	31		
GKS05	m	[kg]		27	29				34	40	42	48	50
GKS06	m	[kg]		43	44	45	44	45	49	56	58	64	66
GKS07	m	[kg]							78	84	86	92	94
GKS09	m	[kg]								135	137	143	146
GKS11	m	[kg]										251	253

			112C22	132C12	132C22	160C22	160C32	180C12	180C32	180C42	225C12	225C22
GKS06	m	[kg]	79	101	108							
GKS07	m	[kg]	107	130	137	180	195					
GKS09	m	[kg]	158	182	189	232	247	298	303			
GKS11	m	[kg]	265	288	295	338	353	404	409	429	628	648
GKS14	m	[kg]	453	473	480	523	538	589	594	614	812	832

GKS□□-3M VAK

			063C11 063C12 063C31 063C32	063C42	071C11	071C13 071C31	071C32	071C33 071C42	080C13 080C32 080C33	090C12	090C32	100C12	100C32
GKS04	m	[kg]	19		21				26	32	34		
GKS05	m	[kg]		31	33				38	44	46	52	54
GKS06	m	[kg]		50	51	52	51	52	56	63	65	71	73
GKS07	m	[kg]							89	95	97	103	105
GKS09	m	[kg]								151	153	159	162
GKS11	m	[kg]										275	277

			112C22	132C12	132C22	160C22	160C32	180C12	180C32	180C42	225C12	225C22
GKS06	m	[kg]	86	108	115							
GKS07	m	[kg]	118	141	148	191	206					
GKS09	m	[kg]	174	198	205	248	263	314	319			
GKS11	m	[kg]	289	312	319	362	377	428	433	453	652	672
GKS14	m	[kg]	486	506	513	556	571	622	627	647	845	865

► Weights with oil filling for mounting position A; all values are approximate.
The weights relate to the basic version. Bear in mind that additional weights may be needed, e.g. for motor options.



Weights

GKS□□-3M SAR / SBR

			063C11 063C12 063C31 063C32	063C42	071C11	071C13 071C31	071C32	071C33 071C42	080C13 080C32 080C33	090C12	090C32	100C12	100C32
GKS04	m	[kg]	16	17	18	19	18	19	24	29	31		
GKS05	m	[kg]		27	29		28	29	34	40	42	48	50
GKS06	m	[kg]		41	43				48	54	56	62	65
GKS07	m	[kg]							74	80	82	88	91
GKS09	m	[kg]								130	132	138	141
GKS11	m	[kg]										240	242

			112C22	132C12	132C22	160C22	160C32	180C12	180C32	180C42	225C12	225C22
GKS06	m	[kg]	78	100	107							
GKS07	m	[kg]	104	126	133	176	191					
GKS09	m	[kg]	153	177	184	227	242	293	298			
GKS11	m	[kg]	254	277	284	327	342	393	398	418	617	637
GKS14	m	[kg]	431	451	458	501	516	567	572	592	790	810

GKS□□-3M SAK

			063C11 063C12 063C31 063C32	063C42	071C11 071C13 071C31	071C32	071C33 071C42	080C13 080C32 080C33	090C12	090C32	100C12	100C32
GKS04	m	[kg]	19		21			26	32	34		
GKS05	m	[kg]		31	33	32	33	38	44	46	52	54
GKS06	m	[kg]		48	50			55	61	63	69	72
GKS07	m	[kg]						85	91	93	99	102
GKS09	m	[kg]							146	148	154	157
GKS11	m	[kg]									264	266

			112C22	132C12	132C22	160C22	160C32	180C12	180C32	180C42	225C12	225C22
GKS06	m	[kg]	85	107	114							
GKS07	m	[kg]	115	137	144	187	202					
GKS09	m	[kg]	169	193	200	243	258	309	314			
GKS11	m	[kg]	278	301	308	351	366	417	422	442	641	661
GKS14	m	[kg]	464	484	491	534	549	600	605	625	823	843

► Weights with oil filling for mounting position A; all values are approximate.
The weights relate to the basic version. Bear in mind that additional weights may be needed, e.g. for motor options.



Weights

GKS□□-4M HAR / HBR

			063C11 063C12 063C31 063C32	063C42	071C11	071C13 071C31	071C32	071C33	071C42	080C13 080C32 080C33	090C12
GKS05	m	[kg]	26	27	28	29	28	29			
GKS06	m	[kg]	43	44	45	46	45	46		51	56
GKS07	m	[kg]		74			76			81	87
GKS09	m	[kg]		127	129	130	129	130	129	134	140
GKS11	m	[kg]								242	248
GKS14	m	[kg]									433

			090C32	100C12	100C32	112C22	132C12	132C22	160C22	160C32	180C12
GKS07	m	[kg]	89	95							
GKS09	m	[kg]	142	148	151	164					
GKS11	m	[kg]	250	256	258	271	294	301			
GKS14	m	[kg]	435	441	444	456	480	487	530	545	596

GKS□□-4M HAK

			063C11 063C12 063C31 063C32	063C42	071C11	071C13 071C31	071C32	071C33	071C42	080C13 080C32 080C33	090C12
GKS05	m	[kg]	30	31	32	33	32	33			
GKS06	m	[kg]	50	51	52	53	52	53		58	63
GKS07	m	[kg]		85			87			92	98
GKS09	m	[kg]		143			145			150	156
GKS11	m	[kg]								266	272
GKS14	m	[kg]									466

			090C32	100C12	100C32	112C22	132C12	132C22	160C22	160C32	180C12
GKS07	m	[kg]	100	106							
GKS09	m	[kg]	158	164	167	180					
GKS11	m	[kg]	274	280	282	295	318	325			
GKS14	m	[kg]	468	474	477	489	513	520	563	578	629

► Weights with oil filling for mounting position A; all values are approximate.
The weights relate to the basic version. Bear in mind that additional weights may be needed, e.g. for motor options.



Weights

GKS□□-4M VAR / VBR

			063C11 063C12 063C31 063C32	063C42	071C11	071C13 071C31	071C32	071C33	071C42	080C13 080C32 080C33	090C12
GKS05	m	[kg]	27	28	29	30	29	30			
GKS06	m	[kg]	46				48			53	59
GKS07	m	[kg]		79			81			86	92
GKS09	m	[kg]		135			137			142	148
GKS11	m	[kg]								258	264
GKS14	m	[kg]									466

			090C32	100C12	100C32	112C22	132C12	132C22	160C22	160C32	180C12
GKS07	m	[kg]	94	100							
GKS09	m	[kg]	150	156	159	172					
GKS11	m	[kg]	266	272	274	287	310	317			
GKS14	m	[kg]	468	474	477	489	513	520	563	578	629

GKS□□-4M VAK

			063C11 063C12 063C31 063C32	063C42	071C11	071C13 071C31	071C32	071C33	071C42	080C13 080C32 080C33	090C12
GKS05	m	[kg]	31	32	33	34	33	34			
GKS06	m	[kg]	53				55			60	66
GKS07	m	[kg]		90			92			97	103
GKS09	m	[kg]		151			153			158	164
GKS11	m	[kg]								282	288
GKS14	m	[kg]									499

			090C32	100C12	100C32	112C22	132C12	132C22	160C22	160C32	180C12
GKS07	m	[kg]	105	111							
GKS09	m	[kg]	166	172	175	188					
GKS11	m	[kg]	290	296	298	311	334	341			
GKS14	m	[kg]	501	507	510	522	546	553	596	611	662

► Weights with oil filling for mounting position A; all values are approximate.
The weights relate to the basic version. Bear in mind that additional weights may be needed, e.g. for motor options.



Weights

GKS□□-4M SAR / SBR

			063C11 063C12 063C31 063C32	063C42	071C11	071C13 071C31	071C32	071C33	071C42	080C13 080C32 080C33	090C12
GKS05	m	[kg]	27	28	29	30	29	30			
GKS06	m	[kg]	44	45	46	47	46	47		52	57
GKS07	m	[kg]		75	77	78	77	78		82	88
GKS09	m	[kg]		130			132			137	143
GKS11	m	[kg]								247	253
GKS14	m	[kg]									444

			090C32	100C12	100C32	112C22	132C12	132C22	160C22	160C32	180C12
GKS07	m	[kg]	90	96							
GKS09	m	[kg]	145	151	154	167					
GKS11	m	[kg]	255	261	263	276	299	306			
GKS14	m	[kg]	446	452	455	467	491	498	541	556	607

GKS□□-4M SAK

			063C11 063C12 063C31 063C32	063C42	071C11	071C13 071C31	071C32	071C33	071C42	080C13 080C32 080C33	090C12
GKS05	m	[kg]	31	32	33	34	33	34			
GKS06	m	[kg]	51	52	53	54	53	54		59	64
GKS07	m	[kg]		86	88	89	88	89		93	99
GKS09	m	[kg]		146			148			153	159
GKS11	m	[kg]								271	277
GKS14	m	[kg]									477

			090C32	100C12	100C32	112C22	132C12	132C22	160C22	160C32	180C12
GKS07	m	[kg]	101	107							
GKS09	m	[kg]	161	167	170	183					
GKS11	m	[kg]	279	285	287	300	323	330			
GKS14	m	[kg]	479	485	488	500	524	531	574	589	640

► Weights with oil filling for mounting position A; all values are approximate.
The weights relate to the basic version. Bear in mind that additional weights may be needed, e.g. for motor options.



Selection tables

50 Hz, 60 Hz: P_N = 0.12 kW

n_N	1425 r/min				1735 r/min			i		
f_N	50 Hz				60 Hz					
	n_2 [r/min]	M_2 [Nm]	c		n_2 [r/min]	M_2 [Nm]	c			
	145	7.5	5.4		175	6.2	6.2	9.836	GKS04-3M □□□063C12	106
	63	17	5.4		77	14	6.2	22.522	GKS04-3M □□□063C12	106
	57	19	5.4		69	16	6.2	25.088	GKS04-3M □□□063C12	106
	50	22	5.0		60	18	5.8	28.727	GKS04-3M □□□063C12	106
	45	24	5.0		54	20	5.8	32.000	GKS04-3M □□□063C12	106
	32	34	5.5		39	28	6.7	44.240	GKS04-3M □□□063C12	106
	28	39	4.7		34	32	5.7	50.943	GKS04-3M □□□063C12	106
	25	44	4.3		30	36	5.2	56.976	GKS04-3M □□□063C12	106
	22	50	3.7		27	41	4.5	64.978	GKS04-3M □□□063C12	106
	20	55	3.4		24	45	4.2	72.210	GKS04-3M □□□063C12	106
	16	69	2.7		19	57	3.3	90.491	GKS04-3M □□□063C12	106
	15	72	2.3		18	59	2.8	95.238	GKS05-4M □□□063C12	122
	14	76	2.4		17	63	2.9	100.067	GKS04-3M □□□063C12	106
	13	85	2.0		16	70	2.4	111.467	GKS04-3M □□□063C12	106
	12	86	3.0		15	71	3.6	114.987	GKS05-4M □□□063C12	122
	11	95	3.0		14	78	3.6	126.933	GKS05-4M □□□063C12	122
	11	98	1.9		13	81	2.3	128.874	GKS04-3M □□□063C12	106
	9.9	110	1.6		12	90	1.9	143.556	GKS04-3M □□□063C12	106
	9.7	110	2.3		12	90	2.8	146.667	GKS05-4M □□□063C12	122
	8.8	122	2.3		11	100	2.8	161.905	GKS05-4M □□□063C12	122
	8.7	125	1.5		11	102	1.9	163.332	GKS04-3M □□□063C12	106
	7.8	139	1.3		9.5	114	1.5	181.939	GKS04-3M □□□063C12	106
	7.7	139	2.4		9.3	114	2.9	185.547	GKS05-4M □□□063C12	122
	7.0	156	1.2		8.4	128	1.5	204.682	GKS04-3M □□□063C12	106
	6.8	157	2.0		8.3	129	2.4	209.067	GKS05-4M □□□063C12	122
	6.3	169	3.2		7.7	138	3.9	224.524	GKS06-4M □□□063C12	122
	6.3	170	1.5		7.6	139	1.8	225.867	GKS05-4M □□□063C12	122
	6.3	174	1.0		7.6	143	1.2	228.000	GKS04-3M □□□063C12	106
	6.0	178	1.9		7.3	146	2.3	236.667	GKS05-4M □□□063C12	122
	5.3	206	0.9		6.4	169	1.1	269.660	GKS04-3M □□□063C12	106
	5.1	210	2.6		6.2	172	3.1	279.286	GKS06-4M □□□063C12	122
					5.8	188	0.9	300.381	GKS04-3M □□□063C12	106
	4.5	238	3.0		5.5	195	3.6	316.800	GKS06-4M □□□063C12	122
	3.9	271	2.0		4.8	223	2.4	361.429	GKS06-4M □□□063C12	122
	3.9	274	1.2		4.7	225	1.5	364.467	GKS05-4M □□□063C12	122
	3.5	306	2.3		4.2	252	2.8	408.000	GKS06-4M □□□063C12	122
	3.5	308	1.0		4.2	253	1.2	410.667	GKS05-4M □□□063C12	122
	3.1	344	1.6		3.8	282	1.9	458.067	GKS06-4M □□□063C12	122
	3.0	352	0.9		3.7	289	1.1	469.389	GKS05-4M □□□063C12	122
					3.4	315	0.9	510.000	GKS05-4M □□□063C12	122



Selection tables

50 Hz, 60 Hz: P_N = 0.12 kW

n_N	1425 r/min				1735 r/min			i		
f_N	50 Hz				60 Hz					
	n_2 [r/min]	M_2 [Nm]	c		n_2 [r/min]	M_2 [Nm]	c			
	2.8	388	1.8		3.3	319	2.2	517.091	GKS06-4M □□□063C12	122
					3.3	326	1.0	528.889	GKS05-4M □□□063C12	122
	2.6	417	1.3		3.1	343	1.6	555.927	GKS06-4M □□□063C12	122
					2.9	367	0.9	594.894	GKS05-4M □□□063C12	122
	2.2	481	1.5		2.7	395	1.8	640.800	GKS06-4M □□□063C12	122
	2.1	523	1.0		2.5	430	1.3	696.668	GKS06-4M □□□063C12	122
	1.8	610	1.2		2.1	501	1.4	812.137	GKS06-4M □□□063C12	122
	1.6	687	0.9		1.9	564	1.1	914.907	GKS06-4M □□□063C12	122
	1.4	764	0.9		1.7	628	1.1	1017.741	GKS06-4M □□□063C12	122
					1.5	707	0.9	1146.529	GKS06-4M □□□063C12	122
					1.3	827	0.8	1340.834	GKS06-4M □□□063C12	122



Selection tables

50 Hz, 60 Hz: P_N = 0.18 kW

n_N	2740 r/min				3370 r/min			i		
f_N	50 Hz				60 Hz					
	n_2 [r/min]	M_2 [Nm]	c		n_2 [r/min]	M_2 [Nm]	c			
	279	5.9	5.6		340	4.8	6.5	9.836	GKS04-3M □□□063C11	106
	122	13	5.6		148	11	6.5	22.522	GKS04-3M □□□063C11	106
	109	15	5.6		133	12	6.5	25.088	GKS04-3M □□□063C11	106
	95	17	5.2		116	14	6.0	28.727	GKS04-3M □□□063C11	106
	86	19	5.2		104	16	6.0	32.000	GKS04-3M □□□063C11	106
	54	30	5.6		66	25	6.4	50.943	GKS04-3M □□□063C11	106
	48	34	5.1		59	28	5.9	56.976	GKS04-3M □□□063C11	106
	42	39	4.4		51	31	5.0	64.978	GKS04-3M □□□063C11	106
	38	43	4.1		46	35	4.7	72.210	GKS04-3M □□□063C11	106
	30	54	3.3		37	44	3.8	90.491	GKS04-3M □□□063C11	106
	29	56	2.8		35	45	3.2	95.238	GKS05-4M □□□063C11	122
	27	60	2.9		33	48	3.3	100.067	GKS04-3M □□□063C11	106
	25	66	2.6		30	54	3.0	111.467	GKS04-3M □□□063C11	106
	21	77	2.4		26	62	2.9	128.874	GKS04-3M □□□063C11	106
	19	86	2.0		23	70	2.4	143.556	GKS04-3M □□□063C11	106
	19	86	3.0		23	70	3.5	146.667	GKS05-4M □□□063C11	122
	17	95	3.0		21	77	3.5	161.905	GKS05-4M □□□063C11	122
	17	97	2.0		20	79	2.3	163.332	GKS04-3M □□□063C11	106
	15	108	1.6		18	88	1.9	181.939	GKS04-3M □□□063C11	106
	15	109	3.0		18	88	3.6	185.547	GKS05-4M □□□063C11	122
	13	122	1.6		16	99	1.8	204.682	GKS04-3M □□□063C11	106
	13	122	2.6		16	100	3.0	209.067	GKS05-4M □□□063C11	122
	12	132	1.9		15	108	2.3	225.867	GKS05-4M □□□063C11	122
	12	136	1.3		15	110	1.5	228.000	GKS04-3M □□□063C11	106
	12	139	2.4		14	113	2.8	236.667	GKS05-4M □□□063C11	122
	10	161	1.2		12	131	1.4	269.660	GKS04-3M □□□063C11	106
	9.1	179	1.0		11	146	1.2	300.381	GKS04-3M □□□063C11	106
	7.6	212	2.5		9.2	172	3.0	361.429	GKS06-4M □□□063C11	122
	7.5	213	1.6		9.2	174	1.8	364.467	GKS05-4M □□□063C11	122
	6.7	239	2.9		8.2	194	3.5	408.000	GKS06-4M □□□063C11	122
	6.7	241	1.3		8.1	196	1.5	410.667	GKS05-4M □□□063C11	122
	6.0	268	2.0		7.3	218	2.4	458.067	GKS06-4M □□□063C11	122
	5.8	275	1.2		7.1	224	1.4	469.389	GKS05-4M □□□063C11	122
	5.4	299	0.9		6.6	243	1.1	510.000	GKS05-4M □□□063C11	122
	5.3	303	2.3		6.5	246	2.7	517.091	GKS06-4M □□□063C11	122
	5.2	310	1.0		6.3	252	1.2	528.889	GKS05-4M □□□063C11	122
	4.9	326	1.6		6.0	265	2.0	555.927	GKS06-4M □□□063C11	122
	4.6	348	0.9		5.6	283	1.1	594.894	GKS05-4M □□□063C11	122
	4.3	375	1.9		5.2	305	2.2	640.800	GKS06-4M □□□063C11	122
	4.1	393	0.8		5.0	319	0.9	670.303	GKS05-4M □□□063C11	122



Selection tables

50 Hz, 60 Hz: P_N = 0.18 kW

n_N	2740 r/min				3370 r/min			i		
f_N	50 Hz				60 Hz					
	n_2 [r/min]	M_2 [Nm]	c		n_2 [r/min]	M_2 [Nm]	c			
	3.9	408	1.3		4.8	332	1.6	696.668	GKS06-4M □□□063C11	122
	3.4	476	1.5		4.1	387	1.7	812.137	GKS06-4M □□□063C11	122
	3.0	536	1.2		3.7	436	1.4	914.907	GKS06-4M □□□063C11	122
	2.7	596	1.2		3.3	485	1.4	1017.741	GKS06-4M □□□063C11	122
	2.4	672	0.9		2.9	546	1.1	1146.529	GKS06-4M □□□063C11	122
	2.0	785	0.9		2.5	639	1.1	1340.834	GKS06-4M □□□063C11	122



Selection tables

50 Hz, 60 Hz: P_N = 0.18 kW

n_N	1365 r/min				1695 r/min			i		
f_N	50 Hz				60 Hz					
	n_2 [r/min]	M_2 [Nm]	c		n_2 [r/min]	M_2 [Nm]	c			
	139	12	3.4		169	9.5	4.1	9.836	GKS04-3M □□□063C32	106
	61	27	3.4		74	22	4.1	22.522	GKS04-3M □□□063C32	106
	54	30	3.4		66	24	4.1	25.088	GKS04-3M □□□063C32	106
	48	34	3.2		58	28	3.8	28.727	GKS04-3M □□□063C32	106
	43	38	3.2		52	31	3.8	32.000	GKS04-3M □□□063C32	106
	31	53	3.5		38	43	4.3	44.240	GKS04-3M □□□063C32	106
	27	61	3.0		33	49	3.7	50.943	GKS04-3M □□□063C32	106
	24	68	2.7		29	55	3.4	56.976	GKS04-3M □□□063C32	106
	21	78	2.4		26	63	2.9	64.978	GKS04-3M □□□063C32	106
	19	86	2.2		23	70	2.7	72.210	GKS04-3M □□□063C32	106
	15	108	1.8		18	87	2.2	90.491	GKS04-3M □□□063C32	106
	14	112	1.5		18	90	1.8	95.238	GKS05-4M □□□063C32	122
	14	120	1.5		17	96	1.9	100.067	GKS04-3M □□□063C32	106
	13	122	3.2		16	98	4.0	103.721	GKS06-4M □□□063C32	122
	12	133	1.3		15	107	1.6	111.467	GKS04-3M □□□063C32	106
	12	133	3.2		15	107	4.0	113.205	GKS06-4M □□□063C32	122
	12	135	1.9		15	109	2.4	114.987	GKS05-4M □□□063C32	122
	11	149	1.9		13	120	2.4	126.933	GKS05-4M □□□063C32	122
	11	149	3.2		13	120	4.0	127.059	GKS06-4M □□□063C32	122
	11	154	1.2		13	124	1.5	128.874	GKS04-3M □□□063C32	106
	9.7	166	3.2		12	133	4.0	140.816	GKS06-4M □□□063C32	122
	9.5	172	1.0		12	138	1.2	143.556	GKS04-3M □□□063C32	106
	9.3	172	1.5		11	139	1.8	146.667	GKS05-4M □□□063C32	122
	8.4	190	1.5		10	153	1.8	161.905	GKS05-4M □□□063C32	122
	8.4	195	1.0		10	157	1.2	163.332	GKS04-3M □□□063C32	106
	7.8	205	2.6		9.6	165	3.3	174.336	GKS06-4M □□□063C32	122
					9.3	175	1.0	181.939	GKS04-3M □□□063C32	106
	7.4	218	1.5		9.0	176	1.9	185.547	GKS05-4M □□□063C32	122
					8.3	197	1.0	204.682	GKS04-3M □□□063C32	106
	6.5	246	1.3		8.0	198	1.6	209.067	GKS05-4M □□□063C32	122
	6.1	264	2.0		7.4	213	2.5	224.524	GKS06-4M □□□063C32	122
	6.0	266	1.0		7.4	214	1.2	225.867	GKS05-4M □□□063C32	122
					7.4	220	0.8	228.000	GKS04-3M □□□063C32	106
	5.8	278	1.2		7.0	224	1.5	236.667	GKS05-4M □□□063C32	122
	4.9	328	1.6		6.0	264	2.0	279.286	GKS06-4M □□□063C32	122
	4.3	372	1.9		5.3	300	2.3	316.800	GKS06-4M □□□063C32	122
	3.8	425	1.3		4.6	342	1.6	361.429	GKS06-4M □□□063C32	122
					4.7	345	1.0	364.467	GKS05-4M □□□063C32	122
	3.4	480	1.5		4.1	386	1.8	408.000	GKS06-4M □□□063C32	122
					4.1	389	0.8	410.667	GKS05-4M □□□063C32	122



Selection tables

50 Hz, 60 Hz: P_N = 0.18 kW

n_N	1365 r/min				1695 r/min			i		
f_N	50 Hz				60 Hz					
	n_2 [r/min]	M_2 [Nm]	c		n_2 [r/min]	M_2 [Nm]	c			
	3.0	539	1.0		3.6	434	1.2	458.067	GKS06-4M □□□063C32	122
	2.6	608	1.2		3.2	490	1.4	517.091	GKS06-4M □□□063C32	122
	2.5	654	0.8		3.0	526	1.0	555.927	GKS06-4M □□□063C32	122
	2.1	753	0.9		2.6	607	1.2	640.800	GKS06-4M □□□063C32	122
					2.4	660	0.8	696.668	GKS06-4M □□□063C32	122
					2.1	769	0.9	812.137	GKS06-4M □□□063C32	122



Selection tables

50 Hz, 60 Hz: P_N = 0.18 kW

n_N	930 r/min				1140 r/min			i		
f_N	50 Hz				60 Hz					
	n_2 [r/min]	M_2 [Nm]	c		n_2 [r/min]	M_2 [Nm]	c			
	182	9.0	5.4		221	7.3	6.6	5.123	GKS04-3M □□□071C13	106
	132	12	5.4		161	10	6.6	7.025	GKS04-3M □□□071C13	106
	114	14	5.4		138	12	6.6	8.167	GKS04-3M □□□071C13	106
	79	21	5.4		96	17	6.6	11.730	GKS04-3M □□□071C13	106
	71	23	5.4		87	19	6.6	13.067	GKS04-3M □□□071C13	106
	58	28	5.4		70	23	6.6	16.087	GKS04-3M □□□071C13	106
	52	31	5.3		63	26	6.5	17.920	GKS04-3M □□□071C13	106
	45	36	5.0		55	29	6.2	20.588	GKS04-3M □□□071C13	106
	41	40	4.6		50	32	5.6	22.522	GKS04-3M □□□071C13	106
	37	44	3.8		45	36	4.6	25.088	GKS04-3M □□□071C13	106
	32	50	3.6		39	41	4.4	28.727	GKS04-3M □□□071C13	106
	29	56	3.0		35	46	3.6	32.000	GKS04-3M □□□071C13	106
	26	62	3.0		32	50	3.6	35.191	GKS04-3M □□□071C13	106
	24	69	2.4		29	56	3.0	39.200	GKS04-3M □□□071C13	106
	21	78	2.4		26	63	2.9	44.240	GKS04-3M □□□071C13	106
	18	89	2.0		22	73	2.5	50.943	GKS04-3M □□□071C13	106
	16	100	1.9		20	82	2.3	56.976	GKS04-3M □□□071C13	106
	14	114	1.6		17	93	2.0	64.978	GKS04-3M □□□071C13	106
	14	117	2.8		17	95	3.5	66.592	GKS05-3M □□□071C13	106
	13	127	1.5		16	103	1.8	72.210	GKS04-3M □□□071C13	106
	12	132	2.4		15	107	2.9	75.033	GKS05-3M □□□071C13	106
	12	140	1.3		14	114	1.6	79.598	GKS04-3M □□□071C13	106
	11	145	2.3		14	119	2.8	82.833	GKS05-3M □□□071C13	106
	10	159	1.2		13	130	1.5	90.491	GKS04-3M □□□071C13	106
	10	164	1.9		12	134	2.4	93.333	GKS05-3M □□□071C13	106
	9.8	164	1.0		12	134	1.2	95.238	GKS05-4M □□□071C13	122
	9.3	176	1.1		11	143	1.3	100.067	GKS04-3M □□□071C13	106
	8.7	188	1.8		11	154	2.2	107.196	GKS05-3M □□□071C13	106
	8.3	196	0.9		10	160	1.1	111.467	GKS04-3M □□□071C13	106
	8.2	195	2.7		10	159	3.4	113.205	GKS06-4M □□□071C13	122
	8.1	198	1.3		9.8	162	1.6	114.987	GKS05-4M □□□071C13	122
	7.7	212	1.5		9.4	173	1.8	120.784	GKS05-3M □□□071C13	106
	7.3	219	1.3		8.9	179	1.6	126.933	GKS05-4M □□□071C13	122
	7.3	219	3.1		8.9	179	3.9	127.059	GKS06-4M □□□071C13	122
	7.3	224	2.8		8.9	182	3.5	127.392	GKS06-3M □□□071C13	106
	7.2	226	0.8		8.8	185	1.0	128.874	GKS04-3M □□□071C13	106
	7.2	228	1.4		8.7	186	1.8	130.097	GKS05-3M □□□071C13	106
	6.6	243	2.2		8.0	198	2.7	140.816	GKS06-4M □□□071C13	122
	6.5	251	2.8		7.9	205	3.4	142.941	GKS06-3M □□□071C13	106
	6.3	257	1.2		7.7	210	1.5	146.588	GKS05-3M □□□071C13	106



Selection tables

50 Hz, 60 Hz: P_N = 0.18 kW

n_N	930 r/min				1140 r/min			i		
f_N	50 Hz				60 Hz					
	n_2 [r/min]	M_2 [Nm]	c		n_2 [r/min]	M_2 [Nm]	c			
	6.3	253	1.0		7.7	206	1.2	146.667	GKS05-4M □□□071C13	122
	6.0	269	2.6		7.3	219	3.1	155.647	GKS06-4M □□□071C13	122
	5.8	283	2.2		7.0	231	2.8	161.029	GKS06-3M □□□071C13	106
	5.7	279	1.0		7.0	228	1.2	161.905	GKS05-4M □□□071C13	122
	5.6	292	1.1		6.8	238	1.4	166.276	GKS05-3M □□□071C13	106
	5.3	301	1.8		6.5	245	2.2	174.336	GKS06-4M □□□071C13	122
	5.0	320	1.0		6.1	261	1.3	185.547	GKS05-4M □□□071C13	122
	5.0	329	1.0		6.0	268	1.2	187.353	GKS05-3M □□□071C13	106
	4.9	334	2.1		5.9	272	2.6	190.080	GKS06-3M □□□071C13	106
	4.6	350	2.0		5.6	285	2.4	202.588	GKS06-4M □□□071C13	122
	4.5	361	0.9		5.4	294	1.1	209.067	GKS05-4M □□□071C13	122
	4.4	371	0.8		5.4	302	1.0	211.200	GKS05-3M □□□071C13	106
	4.3	376	1.7		5.3	307	2.1	214.133	GKS06-3M □□□071C13	106
	4.2	385	2.7		5.1	314	3.4	222.909	GKS07-4M □□□071C13	122
	4.1	387	1.4		5.0	316	1.7	224.524	GKS06-4M □□□071C13	122
	4.0	405	1.7		4.9	330	2.1	230.688	GKS06-3M □□□071C13	106
	3.9	408	0.8		4.8	333	1.0	236.667	GKS05-4M □□□071C13	122
	3.7	435	1.6		4.5	355	2.0	252.000	GKS06-4M □□□071C13	122
	3.6	456	1.4		4.4	372	1.7	259.880	GKS06-3M □□□071C13	106
	3.4	471	2.2		4.1	385	2.7	273.199	GKS07-4M □□□071C13	122
	3.3	482	1.1		4.1	393	1.4	279.286	GKS06-4M □□□071C13	122
	3.2	512	1.4		3.9	418	1.7	291.600	GKS06-3M □□□071C13	106
	2.9	547	1.3		3.6	446	1.6	316.800	GKS06-4M □□□071C13	122
	2.9	554	2.4		3.5	452	2.9	321.049	GKS07-4M □□□071C13	122
	2.8	577	1.1		3.4	470	1.3	328.500	GKS06-3M □□□071C13	106
	2.6	619	1.7		3.2	505	2.1	358.829	GKS07-4M □□□071C13	122
	2.6	624	0.9		3.1	509	1.1	361.429	GKS06-4M □□□071C13	122
	2.3	689	1.9		2.8	562	2.3	399.353	GKS07-4M □□□071C13	122
	2.3	704	1.0		2.8	574	1.2	408.000	GKS06-4M □□□071C13	122
	2.0	801	1.3		2.4	654	1.6	464.367	GKS07-4M □□□071C13	122
	1.8	892	1.5		2.2	728	1.8	516.810	GKS07-4M □□□071C13	122
	1.7	973	1.1		2.0	793	1.3	563.572	GKS07-4M □□□071C13	122
	1.5	1099	1.2		1.8	896	1.5	636.581	GKS07-4M □□□071C13	122
	1.4	1180	0.9		1.7	963	1.1	683.972	GKS07-4M □□□071C13	122
	1.1	1411	2.1		1.4	1151	2.6	817.551	GKS09-4M □□□071C13	122
	1.1	1422	0.9		1.4	1160	1.1	823.810	GKS07-4M □□□071C13	122
	1.0	1590	1.9		1.2	1297	2.4	921.367	GKS09-4M □□□071C13	122
	0.9	1712	1.8		1.1	1397	2.2	992.209	GKS09-4M □□□071C13	122
	0.8	1930	1.6		1.0	1574	2.0	1118.204	GKS09-4M □□□071C13	122
	0.7	2164	1.4		0.9	1766	1.7	1254.197	GKS09-4M □□□071C13	122



Selection tables

50 Hz, 60 Hz: P_N = 0.18 kW

n_N	930 r/min				1140 r/min			i		
f_N	50 Hz				60 Hz					
	n_2 [r/min]	M_2 [Nm]	c		n_2 [r/min]	M_2 [Nm]	c			
	0.7	2439	1.3		0.8	1990	1.5	1413.461	GKS09-4M □□□071C13	122



Selection tables

50 Hz, 60 Hz: P_N = 0.25 kW

n_N	2710 r/min				3390 r/min			i		
f_N	50 Hz				60 Hz					
	n_2 [r/min]	M_2 [Nm]	c		n_2 [r/min]	M_2 [Nm]	c			
	276	8.2	4.0		337	6.6	4.7	9.836	GKS04-3M □□□063C31	106
	120	19	4.0		147	15	4.7	22.522	GKS04-3M □□□063C31	106
	108	21	4.0		132	17	4.7	25.088	GKS04-3M □□□063C31	106
	94	24	3.8		115	19	4.4	28.727	GKS04-3M □□□063C31	106
	85	27	3.8		103	21	4.4	32.000	GKS04-3M □□□063C31	106
	61	37	4.7		75	30	5.4	44.240	GKS04-3M □□□063C31	106
	53	43	4.0		65	34	4.6	50.943	GKS04-3M □□□063C31	106
	48	48	3.7		58	38	4.2	56.976	GKS04-3M □□□063C31	106
	42	54	3.1		51	43	3.6	64.978	GKS04-3M □□□063C31	106
	38	60	2.9		46	48	3.4	72.210	GKS04-3M □□□063C31	106
	30	76	2.3		37	61	2.7	90.491	GKS04-3M □□□063C31	106
	29	78	2.0		35	63	2.3	95.238	GKS05-4M □□□063C31	122
	27	84	2.1		33	67	2.4	100.067	GKS04-3M □□□063C31	106
	24	93	1.8		30	75	2.2	111.467	GKS04-3M □□□063C31	106
	24	95	2.7		29	76	3.3	114.987	GKS05-4M □□□063C31	122
	21	104	2.7		26	83	3.3	126.933	GKS05-4M □□□063C31	122
	21	108	1.7		26	86	2.1	128.874	GKS04-3M □□□063C31	106
	19	120	1.4		23	96	1.7	143.556	GKS04-3M □□□063C31	106
	19	121	2.1		23	96	2.6	146.667	GKS05-4M □□□063C31	122
	17	133	2.1		20	106	2.6	161.905	GKS05-4M □□□063C31	122
	17	137	1.4		20	109	1.7	163.332	GKS04-3M □□□063C31	106
	15	152	1.1		18	122	1.4	181.939	GKS04-3M □□□063C31	106
	15	153	2.2		18	122	2.6	185.547	GKS05-4M □□□063C31	122
	13	171	1.1		16	137	1.3	204.682	GKS04-3M □□□063C31	106
	13	172	1.8		16	137	2.2	209.067	GKS05-4M □□□063C31	122
	12	185	2.9		15	148	3.5	224.524	GKS06-4M □□□063C31	122
	12	186	1.4		15	149	1.7	225.867	GKS05-4M □□□063C31	122
	12	191	0.9		15	153	1.1	228.000	GKS04-3M □□□063C31	106
	12	195	1.7		14	156	2.0	236.667	GKS05-4M □□□063C31	122
	10	226	0.8		12	180	1.0	269.660	GKS04-3M □□□063C31	106
	9.7	230	2.3		12	184	2.8	279.286	GKS06-4M □□□063C31	122
	8.6	261	2.7		10	208	3.2	316.800	GKS06-4M □□□063C31	122
	7.5	297	1.8		9.2	238	2.2	361.429	GKS06-4M □□□063C31	122
	7.4	300	1.1		9.1	240	1.3	364.467	GKS05-4M □□□063C31	122
	6.6	336	2.1		8.1	268	2.5	408.000	GKS06-4M □□□063C31	122
	6.6	338	0.9		8.1	270	1.1	410.667	GKS05-4M □□□063C31	122
	5.9	377	1.4		7.2	301	1.7	458.067	GKS06-4M □□□063C31	122
	5.8	386	0.9		7.1	309	1.0	469.389	GKS05-4M □□□063C31	122
	5.2	425	1.7		6.4	340	2.0	517.091	GKS06-4M □□□063C31	122
	4.9	457	1.2		6.0	366	1.4	555.927	GKS06-4M □□□063C31	122



Selection tables

50 Hz, 60 Hz: P_N = 0.25 kW

n_N	2710 r/min				3390 r/min			i		
f_N	50 Hz				60 Hz					
	n_2 [r/min]	M_2 [Nm]	c		n_2 [r/min]	M_2 [Nm]	c			
	4.2	527	1.3		5.2	421	1.6	640.800	GKS06-4M □□□063C31	122
	3.9	573	0.9		4.8	458	1.1	696.668	GKS06-4M □□□063C31	122
	3.3	668	1.1		4.1	534	1.3	812.137	GKS06-4M □□□063C31	122
	3.0	753	0.8		3.6	602	1.0	914.907	GKS06-4M □□□063C31	122
	2.7	837	0.8		3.3	669	1.0	1017.741	GKS06-4M □□□063C31	122



Selection tables

50 Hz, 60 Hz: P_N = 0.25 kW

n_N	1370 r/min				1680 r/min			i		
f_N	50 Hz				60 Hz					
	n_2 [r/min]	M_2 [Nm]	c		n_2 [r/min]	M_2 [Nm]	c			
	267	8.5	4.5		326	6.9	5.4	5.123	GKS04-3M □□□063C42	106
	195	12	4.5		238	9.5	5.4	7.025	GKS04-3M □□□063C42	106
	168	14	4.5		205	11	5.4	8.167	GKS04-3M □□□063C42	106
	152	15	5.2		186	12	6.2	8.991	GKS04-3M □□□063C42	106
	139	16	5.2		170	13	6.1	9.836	GKS04-3M □□□063C42	106
	117	19	4.5		142	16	5.4	11.730	GKS04-3M □□□063C42	106
	105	22	4.5		128	18	5.4	13.067	GKS04-3M □□□063C42	106
	96	24	5.2		117	19	6.2	14.333	GKS04-3M □□□063C42	106
	85	27	4.5		104	22	5.4	16.087	GKS04-3M □□□063C42	106
	77	30	4.5		93	24	5.4	17.920	GKS04-3M □□□063C42	106
	67	34	5.2		81	28	6.2	20.588	GKS04-3M □□□063C42	106
	61	37	4.9		74	30	5.8	22.522	GKS04-3M □□□063C42	106
	55	42	4.0		67	34	4.7	25.088	GKS04-3M □□□063C42	106
	48	48	3.8		58	39	4.5	28.727	GKS04-3M □□□063C42	106
	43	53	3.2		52	43	3.7	32.000	GKS04-3M □□□063C42	106
	39	58	3.1		48	47	3.7	35.191	GKS04-3M □□□063C42	106
	35	65	2.6		43	53	3.1	39.200	GKS04-3M □□□063C42	106
	31	73	2.5		38	60	3.1	44.240	GKS04-3M □□□063C42	106
	27	84	2.2		33	69	2.6	50.943	GKS04-3M □□□063C42	106
	24	94	2.0		29	77	2.4	56.976	GKS04-3M □□□063C42	106
	21	108	1.7		26	88	2.1	64.978	GKS04-3M □□□063C42	106
	21	110	3.0		25	90	3.7	66.592	GKS05-3M □□□063C42	106
	19	120	1.6		23	97	1.9	72.210	GKS04-3M □□□063C42	106
	18	124	2.5		22	101	3.1	75.033	GKS05-3M □□□063C42	106
	17	132	1.4		21	107	1.7	79.598	GKS04-3M □□□063C42	106
	17	137	2.4		20	112	3.0	82.833	GKS05-3M □□□063C42	106
	15	150	1.2		19	122	1.5	90.491	GKS04-3M □□□063C42	106
	15	154	2.0		18	126	2.5	93.333	GKS05-3M □□□063C42	106
	14	155	1.1		18	126	1.3	95.238	GKS05-4M □□□063C42	122
	14	166	1.1		17	135	1.4	100.067	GKS04-3M □□□063C42	106
	13	177	1.9		16	145	2.3	107.196	GKS05-3M □□□063C42	106
	12	185	0.9		15	150	1.1	111.467	GKS04-3M □□□063C42	106
	12	187	3.2		15	153	3.9	113.082	GKS06-3M □□□063C42	106
	12	184	2.9		15	150	3.6	113.205	GKS06-4M □□□063C42	122
	12	187	1.4		15	153	1.7	114.987	GKS05-4M □□□063C42	122
	11	200	1.6		14	163	1.9	120.784	GKS05-3M □□□063C42	106
	11	207	1.4		13	168	1.7	126.933	GKS05-4M □□□063C42	122
	11	211	3.0		13	172	3.7	127.392	GKS06-3M □□□063C42	106
	11	213	0.9		13	174	1.1	128.874	GKS04-3M □□□063C42	106
	11	215	1.5		13	176	1.9	130.097	GKS05-3M □□□063C42	106



Selection tables

50 Hz, 60 Hz: P_N = 0.25 kW

n_N	1370 r/min				1680 r/min			i		
f_N	50 Hz				60 Hz					
	n_2 [r/min]	M_2 [Nm]	c		n_2 [r/min]	M_2 [Nm]	c			
	9.7	229	2.3		12	187	2.9	140.816	GKS06-4M □□□063C42	122
	9.6	237	2.6		12	193	3.2	142.941	GKS06-3M □□□063C42	106
					12	194	0.9	143.556	GKS04-3M □□□063C42	106
	9.4	243	1.3		11	198	1.6	146.588	GKS05-3M □□□063C42	106
	9.3	239	1.1		11	195	1.3	146.667	GKS05-4M □□□063C42	122
	8.8	253	2.7		11	207	3.3	155.647	GKS06-4M □□□063C42	122
	8.5	267	2.4		10	217	2.9	161.029	GKS06-3M □□□063C42	106
	8.5	263	1.1		10	215	1.3	161.905	GKS05-4M □□□063C42	122
					10	220	0.9	163.332	GKS04-3M □□□063C42	106
	8.2	275	1.2		10	224	1.5	166.276	GKS05-3M □□□063C42	106
	7.9	284	1.9		9.6	231	2.3	174.336	GKS06-4M □□□063C42	122
	7.4	302	1.1		9.0	246	1.3	185.547	GKS05-4M □□□063C42	122
	7.3	310	1.0		8.9	253	1.2	187.353	GKS05-3M □□□063C42	106
	7.2	315	2.2		8.8	257	2.7	190.080	GKS06-3M □□□063C42	106
	6.8	330	2.1		8.2	269	2.6	202.588	GKS06-4M □□□063C42	122
	6.6	340	0.9		8.0	277	1.1	209.067	GKS05-4M □□□063C42	122
	6.5	350	0.9		7.9	285	1.1	211.200	GKS05-3M □□□063C42	106
	6.4	354	1.8		7.8	289	2.2	214.133	GKS06-3M □□□063C42	106
	6.1	363	2.9		7.5	296	3.6	222.909	GKS07-4M □□□063C42	122
	6.1	365	1.5		7.4	298	1.8	224.524	GKS06-4M □□□063C42	122
					7.4	300	0.9	225.867	GKS05-4M □□□063C42	122
					7.4	307	0.9	227.484	GKS05-3M □□□063C42	106
	5.9	382	1.8		7.2	311	2.3	230.688	GKS06-3M □□□063C42	106
	5.8	385	0.9		7.1	314	1.1	236.667	GKS05-4M □□□063C42	122
	5.4	410	1.7		6.6	334	2.1	252.000	GKS06-4M □□□063C42	122
					6.6	346	0.9	256.320	GKS05-3M □□□063C42	106
	5.3	430	1.5		6.4	351	1.8	259.880	GKS06-3M □□□063C42	106
	5.0	445	2.4		6.1	362	2.9	273.199	GKS07-4M □□□063C42	122
	4.9	454	1.2		6.0	371	1.4	279.286	GKS06-4M □□□063C42	122
					5.8	385	0.9	289.917	GKS05-4M □□□063C42	122
	4.7	483	1.5		5.7	394	1.8	291.600	GKS06-3M □□□063C42	106
	4.3	515	1.4		5.3	420	1.7	316.800	GKS06-4M □□□063C42	122
	4.3	522	2.5		5.2	426	3.1	321.049	GKS07-4M □□□063C42	122
	4.2	544	1.2		5.1	443	1.4	328.500	GKS06-3M □□□063C42	106
	3.8	584	1.8		4.7	476	2.2	358.829	GKS07-4M □□□063C42	122
	3.8	588	0.9		4.6	480	1.1	361.429	GKS06-4M □□□063C42	122
	3.4	650	2.0		4.2	530	2.5	399.353	GKS07-4M □□□063C42	122
	3.4	664	1.1		4.1	541	1.3	408.000	GKS06-4M □□□063C42	122
					3.7	608	0.9	458.067	GKS06-4M □□□063C42	122
	3.0	756	1.4		3.6	616	1.7	464.367	GKS07-4M □□□063C42	122



Selection tables

50 Hz, 60 Hz: P_N = 0.25 kW

n_N	1370 r/min				1680 r/min			i		
f_N	50 Hz				60 Hz					
	n_2 [r/min]	M_2 [Nm]	c		n_2 [r/min]	M_2 [Nm]	c			
	2.7	841	1.6		3.2	686	1.9	516.810	GKS07-4M □□□063C42	122
	2.7	841	0.8		3.2	686	1.0	517.091	GKS06-4M □□□063C42	122
	2.4	917	1.1		3.0	748	1.4	563.572	GKS07-4M □□□063C42	122
	2.2	1036	1.3		2.6	845	1.6	636.581	GKS07-4M □□□063C42	122
					2.6	850	0.8	640.800	GKS06-4M □□□063C42	122
	2.0	1113	0.9		2.4	908	1.2	683.972	GKS07-4M □□□063C42	122
	1.7	1330	2.3		2.0	1085	2.8	817.551	GKS09-4M □□□063C42	122
	1.7	1340	1.0		2.0	1093	1.2	823.810	GKS07-4M □□□063C42	122
	1.5	1499	2.1		1.8	1222	2.5	921.367	GKS09-4M □□□063C42	122
	1.5	1510	0.8		1.8	1232	1.0	928.237	GKS07-4M □□□063C42	122
	1.4	1614	1.9		1.7	1316	2.3	992.209	GKS09-4M □□□063C42	122
	1.4	1627	0.8		1.7	1327	1.0	999.806	GKS07-4M □□□063C42	122
	1.2	1819	1.7		1.5	1484	2.1	1118.204	GKS09-4M □□□063C42	122
					1.5	1495	0.8	1126.542	GKS07-4M □□□063C42	122
	1.1	2041	1.5		1.3	1664	1.8	1254.197	GKS09-4M □□□063C42	122
	1.0	2300	1.3		1.2	1875	1.6	1413.461	GKS09-4M □□□063C42	122



Selection tables

50 Hz, 60 Hz: P_N = 0.25 kW

n_N	930 r/min				1140 r/min			i		
f_N	50 Hz				60 Hz					
	n_2 [r/min]	M_2 [Nm]	c		n_2 [r/min]	M_2 [Nm]	c			
	182	12	3.9		221	10	4.7	5.123	GKS04-3M □□□071C33	106
	132	17	3.9		161	14	4.7	7.025	GKS04-3M □□□071C33	106
	114	20	3.9		138	16	4.7	8.167	GKS04-3M □□□071C33	106
	103	22	4.4		126	18	5.4	8.991	GKS04-3M □□□071C33	106
	95	24	4.4		115	20	5.4	9.836	GKS04-3M □□□071C33	106
	79	29	3.9		96	23	4.7	11.730	GKS04-3M □□□071C33	106
	71	32	3.9		87	26	4.7	13.067	GKS04-3M □□□071C33	106
	65	35	4.4		79	29	5.4	14.333	GKS04-3M □□□071C33	106
	58	39	3.9		70	32	4.7	16.087	GKS04-3M □□□071C33	106
	52	44	3.8		63	36	4.7	17.920	GKS04-3M □□□071C33	106
	45	50	3.6		55	41	4.4	20.588	GKS04-3M □□□071C33	106
	41	55	3.3		50	45	4.1	22.522	GKS04-3M □□□071C33	106
	37	61	2.7		45	50	3.3	25.088	GKS04-3M □□□071C33	106
	32	70	2.6		39	57	3.2	28.727	GKS04-3M □□□071C33	106
	29	78	2.1		35	64	2.6	32.000	GKS04-3M □□□071C33	106
	26	86	2.1		32	70	2.6	35.191	GKS04-3M □□□071C33	106
	24	96	1.8		29	78	2.2	39.200	GKS04-3M □□□071C33	106
	21	108	1.7		26	88	2.1	44.240	GKS04-3M □□□071C33	106
	20	115	2.6		24	94	3.2	47.059	GKS05-3M □□□071C33	106
	18	124	1.5		22	101	1.8	50.943	GKS04-3M □□□071C33	106
	16	139	1.3		20	113	1.7	56.976	GKS04-3M □□□071C33	106
	14	158	1.2		17	129	1.4	64.978	GKS04-3M □□□071C33	106
	14	162	2.0		17	132	2.5	66.592	GKS05-3M □□□071C33	106
	13	176	1.1		16	144	1.3	72.210	GKS04-3M □□□071C33	106
	12	183	1.7		15	149	2.1	75.033	GKS05-3M □□□071C33	106
	12	194	0.9		14	158	1.2	79.598	GKS04-3M □□□071C33	106
	11	202	1.6		14	165	2.0	82.833	GKS05-3M □□□071C33	106
	10	221	0.9		13	180	1.1	90.491	GKS04-3M □□□071C33	106
	10	227	3.1		12	185	3.8	93.176	GKS06-3M □□□071C33	106
	10	228	1.4		12	186	1.7	93.333	GKS05-3M □□□071C33	106
	9.0	249	2.8		11	203	3.4	103.721	GKS06-4M □□□071C33	122
	8.9	256	2.5		11	209	3.0	104.967	GKS06-3M □□□071C33	106
	8.7	261	1.3		11	213	1.6	107.196	GKS05-3M □□□071C33	106
	8.2	276	2.5		10	225	3.1	113.082	GKS06-3M □□□071C33	106
	8.2	271	2.0		10	221	2.4	113.205	GKS06-4M □□□071C33	122
	8.1	276	0.9		9.8	225	1.1	114.987	GKS05-4M □□□071C33	122
	7.7	295	1.1		9.4	240	1.3	120.784	GKS05-3M □□□071C33	106
	7.3	304	0.9		8.9	248	1.1	126.933	GKS05-4M □□□071C33	122
	7.3	305	2.3		8.9	248	2.8	127.059	GKS06-4M □□□071C33	122
	7.3	311	2.0		8.9	253	2.5	127.392	GKS06-3M □□□071C33	106



Selection tables

50 Hz, 60 Hz: P_N = 0.25 kW

n_N	930 r/min				1140 r/min			i		
f_N	50 Hz				60 Hz					
	n_2 [r/min]	M_2 [Nm]	c		n_2 [r/min]	M_2 [Nm]	c			
	7.2	317	1.0		8.7	259	1.3	130.097	GKS05-3M □□□071C33	106
	6.8	330	3.2		8.2	269	3.9	137.748	GKS07-4M □□□071C33	122
	6.6	338	1.6		8.0	275	2.0	140.816	GKS06-4M □□□071C33	122
	6.5	349	2.0		7.9	284	2.5	142.941	GKS06-3M □□□071C33	106
	6.3	357	0.9		7.7	292	1.1	146.588	GKS05-3M □□□071C33	106
	6.0	373	1.8		7.3	304	2.3	155.647	GKS06-4M □□□071C33	122
	5.8	393	1.6		7.0	320	2.0	161.029	GKS06-3M □□□071C33	106
	5.6	405	0.8		6.8	331	1.0	166.276	GKS05-3M □□□071C33	106
	5.3	418	1.3		6.5	341	1.6	174.336	GKS06-4M □□□071C33	122
	5.2	430	2.5		6.3	350	3.0	179.201	GKS07-4M □□□071C33	122
	4.9	463	1.5		5.9	378	1.9	190.080	GKS06-3M □□□071C33	106
	4.6	486	1.4		5.6	396	1.8	202.588	GKS06-4M □□□071C33	122
	4.3	522	1.2		5.3	426	1.5	214.133	GKS06-3M □□□071C33	106
	4.2	534	2.0		5.1	436	2.4	222.909	GKS07-4M □□□071C33	122
	4.1	538	1.0		5.0	439	1.2	224.524	GKS06-4M □□□071C33	122
	4.0	562	1.2		4.9	459	1.5	230.688	GKS06-3M □□□071C33	106
	3.7	604	1.2		4.5	493	1.4	252.000	GKS06-4M □□□071C33	122
	3.6	634	1.0		4.4	517	1.2	259.880	GKS06-3M □□□071C33	106
	3.4	655	1.6		4.1	534	2.0	273.199	GKS07-4M □□□071C33	122
	3.3	669	0.8		4.1	546	1.0	279.286	GKS06-4M □□□071C33	122
	3.2	711	1.0		3.9	580	1.2	291.600	GKS06-3M □□□071C33	106
	2.9	759	0.9		3.6	619	1.1	316.800	GKS06-4M □□□071C33	122
	2.9	770	1.7		3.5	628	2.1	321.049	GKS07-4M □□□071C33	122
	2.6	860	1.2		3.2	702	1.5	358.829	GKS07-4M □□□071C33	122
	2.3	957	1.4		2.8	781	1.7	399.353	GKS07-4M □□□071C33	122
	2.0	1113	0.9		2.4	908	1.2	464.367	GKS07-4M □□□071C33	122
	1.8	1239	1.1		2.2	1011	1.3	516.810	GKS07-4M □□□071C33	122
	1.5	1526	0.9		1.8	1245	1.1	636.581	GKS07-4M □□□071C33	122
	1.1	1960	1.5		1.4	1599	1.9	817.551	GKS09-4M □□□071C33	122
	1.0	2208	1.4		1.2	1802	1.7	921.367	GKS09-4M □□□071C33	122
	0.9	2378	1.3		1.1	1940	1.6	992.209	GKS09-4M □□□071C33	122
	0.8	2680	1.1		1.0	2186	1.4	1118.204	GKS09-4M □□□071C33	122
	0.7	3006	1.0		0.9	2452	1.2	1254.197	GKS09-4M □□□071C33	122
	0.7	3388	0.9		0.8	2764	1.1	1413.461	GKS09-4M □□□071C33	122



Selection tables

50 Hz, 60 Hz: P_N = 0.37 kW

n_N	2720 r/min				3360 r/min			i		
f_N	50 Hz				60 Hz					
	n_2 [r/min]	M_2 [Nm]	c		n_2 [r/min]	M_2 [Nm]	c			
	132	25	5.9		161	21	6.8	20.588	GKS04-3M □□□071C11	106
	121	28	5.4		147	22	6.2	22.522	GKS04-3M □□□071C11	106
	108	31	4.4		132	25	5.1	25.088	GKS04-3M □□□071C11	106
	95	35	4.2		116	29	4.9	28.727	GKS04-3M □□□071C11	106
	85	39	3.5		104	32	4.0	32.000	GKS04-3M □□□071C11	106
	77	43	3.5		94	35	4.0	35.191	GKS04-3M □□□071C11	106
	69	48	2.8		85	39	3.3	39.200	GKS04-3M □□□071C11	106
	62	55	3.2		75	44	3.6	44.240	GKS04-3M □□□071C11	106
	53	63	2.7		65	51	3.1	50.943	GKS04-3M □□□071C11	106
	48	70	2.5		58	57	2.9	56.976	GKS04-3M □□□071C11	106
	42	80	2.1		51	65	2.4	64.978	GKS04-3M □□□071C11	106
	38	89	2.0		46	72	2.3	72.210	GKS04-3M □□□071C11	106
	36	93	3.1		44	75	3.6	75.033	GKS05-3M □□□071C11	106
	34	98	1.7		42	80	2.0	79.598	GKS04-3M □□□071C11	106
	33	102	3.0		40	83	3.5	82.833	GKS05-3M □□□071C11	106
	30	112	1.6		37	90	1.8	90.491	GKS04-3M □□□071C11	106
	29	115	2.5		36	93	2.9	93.333	GKS05-3M □□□071C11	106
	29	116	1.3		35	94	1.5	95.238	GKS05-4M □□□071C11	122
	27	123	1.4		33	100	1.6	100.067	GKS04-3M □□□071C11	106
	25	132	2.3		31	107	2.7	107.196	GKS05-3M □□□071C11	106
	24	138	1.2		30	111	1.5	111.467	GKS04-3M □□□071C11	106
	24	139	1.8		29	113	2.2	114.987	GKS05-4M □□□071C11	122
	23	149	2.1		28	121	2.5	120.784	GKS05-3M □□□071C11	106
	21	154	1.8		26	125	2.2	126.933	GKS05-4M □□□071C11	122
	21	159	1.2		26	129	1.4	128.874	GKS04-3M □□□071C11	106
	21	161	2.1		26	130	2.5	130.097	GKS05-3M □□□071C11	106
	19	171	3.1		24	138	3.7	140.816	GKS06-4M □□□071C11	122
	19	177	1.0		23	143	1.2	143.556	GKS04-3M □□□071C11	106
	19	181	1.7		23	146	2.1	146.588	GKS05-3M □□□071C11	106
	19	178	1.4		23	144	1.7	146.667	GKS05-4M □□□071C11	122
	17	199	3.2		21	161	3.8	161.029	GKS06-3M □□□071C11	106
	17	196	1.4		21	159	1.7	161.905	GKS05-4M □□□071C11	122
	17	202	0.9		20	163	1.1	163.332	GKS04-3M □□□071C11	106
	16	205	1.6		20	166	1.9	166.276	GKS05-3M □□□071C11	106
	16	211	2.5		19	171	3.0	174.336	GKS06-4M □□□071C11	122
	15	225	1.5		18	182	1.7	185.547	GKS05-4M □□□071C11	122
	15	231	1.4		18	187	1.6	187.353	GKS05-3M □□□071C11	106
	14	235	3.0		18	190	3.6	190.080	GKS06-3M □□□071C11	106
	13	246	2.8		16	199	3.4	202.588	GKS06-4M □□□071C11	122
	13	254	1.2		16	205	1.5	209.067	GKS05-4M □□□071C11	122



Selection tables

50 Hz, 60 Hz: P_N = 0.37 kW

n_N	2720 r/min				3360 r/min			i		
f_N	50 Hz				60 Hz					
	n_2 [r/min]	M_2 [Nm]	c		n_2 [r/min]	M_2 [Nm]	c			
	13	261	1.2		16	211	1.4	211.200	GKS05-3M □□□071C11	106
	13	264	2.4		16	214	2.9	214.133	GKS06-3M □□□071C11	106
	12	272	2.0		15	220	2.3	224.524	GKS06-4M □□□071C11	122
	12	274	0.9		15	222	1.1	225.867	GKS05-4M □□□071C11	122
	12	281	1.0		15	227	1.2	227.484	GKS05-3M □□□071C11	106
	12	285	2.5		14	230	2.9	230.688	GKS06-3M □□□071C11	106
	12	287	1.2		14	232	1.4	236.667	GKS05-4M □□□071C11	122
	11	306	2.3		13	247	2.7	252.000	GKS06-4M □□□071C11	122
	11	316	1.0		13	256	1.2	256.320	GKS05-3M □□□071C11	106
	11	321	2.0		13	260	2.4	259.880	GKS06-3M □□□071C11	106
	10	331	3.2		12	268	3.8	273.199	GKS07-4M □□□071C11	122
	9.7	339	1.6		12	274	1.9	279.286	GKS06-4M □□□071C11	122
	9.4	352	0.9		12	285	1.1	289.917	GKS05-4M □□□071C11	122
	9.3	360	2.0		11	291	2.3	291.600	GKS06-3M □□□071C11	106
	8.6	384	1.8		11	311	2.2	316.800	GKS06-4M □□□071C11	122
	8.3	405	1.6		10	328	1.9	328.500	GKS06-3M □□□071C11	106
	7.6	435	2.4		9.3	352	2.9	358.829	GKS07-4M □□□071C11	122
	7.5	438	1.2		9.2	355	1.5	361.429	GKS06-4M □□□071C11	122
	6.8	484	2.7		8.3	392	3.2	399.353	GKS07-4M □□□071C11	122
	6.7	495	1.4		8.1	401	1.7	408.000	GKS06-4M □□□071C11	122
	5.9	556	1.0		7.3	450	1.1	458.067	GKS06-4M □□□071C11	122
	5.9	563	1.9		7.2	456	2.2	464.367	GKS07-4M □□□071C11	122
	5.3	627	2.1		6.4	507	2.5	516.810	GKS07-4M □□□071C11	122
	5.3	627	1.1		6.4	508	1.3	517.091	GKS06-4M □□□071C11	122
	4.8	684	1.5		5.9	553	1.8	563.572	GKS07-4M □□□071C11	122
	4.3	772	1.7		5.2	625	2.0	636.581	GKS07-4M □□□071C11	122
	4.2	777	0.9		5.2	629	1.1	640.800	GKS06-4M □□□071C11	122
	4.0	830	1.3		4.9	672	1.5	683.972	GKS07-4M □□□071C11	122
	3.3	992	3.1		4.1	803	3.6	817.551	GKS09-4M □□□071C11	122
	3.3	999	1.3		4.0	809	1.6	823.810	GKS07-4M □□□071C11	122
	3.0	1118	2.8		3.6	905	3.3	921.367	GKS09-4M □□□071C11	122
	2.9	1126	1.1		3.6	911	1.3	928.237	GKS07-4M □□□071C11	122
	2.7	1203	2.5		3.4	974	3.0	992.209	GKS09-4M □□□071C11	122
	2.7	1213	1.1		3.3	982	1.3	999.806	GKS07-4M □□□071C11	122
	2.4	1356	2.3		3.0	1098	2.7	1118.204	GKS09-4M □□□071C11	122
	2.4	1366	0.9		3.0	1106	1.1	1126.542	GKS07-4M □□□071C11	122
	2.2	1521	2.0		2.7	1231	2.4	1254.197	GKS09-4M □□□071C11	122
	2.1	1550	0.9		2.6	1255	1.0	1277.842	GKS07-4M □□□071C11	122
	1.9	1714	1.8		2.4	1388	2.1	1413.461	GKS09-4M □□□071C11	122



Selection tables

50 Hz, 60 Hz: P_N = 0.37 kW

n_N	1410 r/min				1720 r/min			i		
f_N	50 Hz				60 Hz					
	n_2 [r/min]	M_2 [Nm]	c		n_2 [r/min]	M_2 [Nm]	c			
	275	12	4.0		334	10.0	4.6	5.123	GKS04-3M □□□071C32	106
	201	17	4.0		243	14	4.6	7.025	GKS04-3M □□□071C32	106
	173	19	4.0		209	16	4.6	8.167	GKS04-3M □□□071C32	106
	157	21	4.5		190	18	5.3	8.991	GKS04-3M □□□071C32	106
	143	23	4.5		174	19	5.3	9.836	GKS04-3M □□□071C32	106
	120	28	4.0		146	23	4.6	11.730	GKS04-3M □□□071C32	106
	108	31	4.0		131	25	4.6	13.067	GKS04-3M □□□071C32	106
	98	34	4.5		119	28	5.3	14.333	GKS04-3M □□□071C32	106
	88	38	4.0		106	31	4.6	16.087	GKS04-3M □□□071C32	106
	79	43	3.9		95	35	4.5	17.920	GKS04-3M □□□071C32	106
	69	49	3.7		83	40	4.3	20.588	GKS04-3M □□□071C32	106
	63	54	3.4		76	44	4.0	22.522	GKS04-3M □□□071C32	106
	56	60	2.8		68	49	3.3	25.088	GKS04-3M □□□071C32	106
	49	68	2.7		60	56	3.1	28.727	GKS04-3M □□□071C32	106
	44	76	2.2		53	62	2.6	32.000	GKS04-3M □□□071C32	106
	40	84	2.2		49	69	2.5	35.191	GKS04-3M □□□071C32	106
	36	93	1.8		44	76	2.1	39.200	GKS04-3M □□□071C32	106
	32	105	1.8		39	86	2.1	44.240	GKS04-3M □□□071C32	106
	30	112	2.7		36	92	3.3	47.059	GKS05-3M □□□071C32	106
	28	121	1.5		34	99	1.8	50.943	GKS04-3M □□□071C32	106
	25	136	1.4		30	111	1.7	56.976	GKS04-3M □□□071C32	106
	22	155	1.2		26	127	1.4	64.978	GKS04-3M □□□071C32	106
	21	159	2.1		26	130	2.5	66.592	GKS05-3M □□□071C32	106
	20	172	1.1		24	141	1.3	72.210	GKS04-3M □□□071C32	106
	19	179	1.7		23	146	2.1	75.033	GKS05-3M □□□071C32	106
	18	189	1.0		22	155	1.2	79.598	GKS04-3M □□□071C32	106
	17	197	1.7		21	162	2.0	82.833	GKS05-3M □□□071C32	106
	16	215	0.9		19	177	1.1	90.491	GKS04-3M □□□071C32	106
	15	222	3.2		18	182	3.9	93.176	GKS06-3M □□□071C32	106
	15	222	1.4		18	182	1.7	93.333	GKS05-3M □□□071C32	106
	14	243	2.8		17	199	3.4	103.721	GKS06-4M □□□071C32	122
	13	250	2.5		16	205	3.1	104.967	GKS06-3M □□□071C32	106
	13	255	1.3		16	209	1.6	107.196	GKS05-3M □□□071C32	106
	13	269	2.6		15	221	3.2	113.082	GKS06-3M □□□071C32	106
	13	265	2.0		15	217	2.5	113.205	GKS06-4M □□□071C32	122
	12	269	1.0		15	221	1.2	114.987	GKS05-4M □□□071C32	122
	12	287	1.1		14	236	1.3	120.784	GKS05-3M □□□071C32	106
	11	297	1.0		14	243	1.2	126.933	GKS05-4M □□□071C32	122
	11	297	2.3		14	244	2.8	127.059	GKS06-4M □□□071C32	122
	11	303	2.1		13	249	2.6	127.392	GKS06-3M □□□071C32	106



Selection tables

50 Hz, 60 Hz: P_N = 0.37 kW

n_N	1410 r/min				1720 r/min			i		
f_N	50 Hz				60 Hz					
	n_2 [r/min]	M_2 [Nm]	c		n_2 [r/min]	M_2 [Nm]	c			
	11	310	1.1		13	254	1.3	130.097	GKS05-3M □□□071C32	106
	10	329	1.6		12	270	2.0	140.816	GKS06-4M □□□071C32	122
	9.9	340	2.1		12	279	2.5	142.941	GKS06-3M □□□071C32	106
	9.6	349	0.9		12	286	1.1	146.588	GKS05-3M □□□071C32	106
	9.1	364	1.9		11	299	2.3	155.647	GKS06-4M □□□071C32	122
	8.8	383	1.7		11	314	2.0	161.029	GKS06-3M □□□071C32	106
	8.5	396	0.8		10	324	1.0	166.276	GKS05-3M □□□071C32	106
	8.1	408	1.3		9.8	334	1.6	174.336	GKS06-4M □□□071C32	122
	7.9	419	2.5		9.5	344	3.1	179.201	GKS07-4M □□□071C32	122
	7.4	452	1.6		9.0	371	1.9	190.080	GKS06-3M □□□071C32	106
	7.0	474	1.5		8.4	389	1.8	202.588	GKS06-4M □□□071C32	122
	6.6	510	1.2		8.0	418	1.5	214.133	GKS06-3M □□□071C32	106
	6.3	522	2.0		7.7	428	2.5	222.909	GKS07-4M □□□071C32	122
	6.3	525	1.0		7.6	431	1.2	224.524	GKS06-4M □□□071C32	122
	6.1	549	1.3		7.4	450	1.6	230.688	GKS06-3M □□□071C32	106
	5.6	590	1.2		6.8	483	1.5	252.000	GKS06-4M □□□071C32	122
	5.4	619	1.0		6.6	507	1.3	259.880	GKS06-3M □□□071C32	106
	5.2	639	1.6		6.3	524	2.0	273.199	GKS07-4M □□□071C32	122
	5.1	653	0.8		6.1	536	1.0	279.286	GKS06-4M □□□071C32	122
	4.8	694	1.0		5.9	569	1.2	291.600	GKS06-3M □□□071C32	106
	4.5	741	0.9		5.4	608	1.2	316.800	GKS06-4M □□□071C32	122
	4.4	751	1.8		5.3	616	2.1	321.049	GKS07-4M □□□071C32	122
	4.3	782	0.8		5.2	641	1.0	328.500	GKS06-3M □□□071C32	106
	3.9	840	1.3		4.8	688	1.5	358.829	GKS07-4M □□□071C32	122
	3.5	934	1.4		4.3	766	1.7	399.353	GKS07-4M □□□071C32	122
	3.0	1086	1.0		3.7	891	1.2	464.367	GKS07-4M □□□071C32	122
	2.7	1209	1.1		3.3	991	1.3	516.810	GKS07-4M □□□071C32	122
	2.2	1489	0.9		2.7	1221	1.1	636.581	GKS07-4M □□□071C32	122
	1.7	1913	1.6		2.1	1568	1.9	817.551	GKS09-4M □□□071C32	122
	1.5	2156	1.4		1.9	1767	1.7	921.367	GKS09-4M □□□071C32	122
	1.4	2322	1.3		1.7	1903	1.6	992.209	GKS09-4M □□□071C32	122
	1.3	2616	1.2		1.5	2145	1.4	1118.204	GKS09-4M □□□071C32	122
	1.1	2934	1.0		1.4	2406	1.3	1254.197	GKS09-4M □□□071C32	122
	1.0	3307	0.9		1.2	2711	1.1	1413.461	GKS09-4M □□□071C32	122



Selection tables

50 Hz, 60 Hz: P_N = 0.37 kW

n_N	950 r/min				1160 r/min			i		
f_N	50 Hz				60 Hz					
	n_2 [r/min]	M_2 [Nm]	c		n_2 [r/min]	M_2 [Nm]	c			
	185	18	4.4		225	15	5.4	5.123	GKS04-3M □□□080C13	106
	135	25	3.7		164	20	4.6	7.025	GKS04-3M □□□080C13	106
	116	29	4.4		141	24	5.4	8.167	GKS04-3M □□□080C13	106
	106	32	3.2		128	26	4.0	8.991	GKS04-3M □□□080C13	106
	97	35	3.1		117	28	3.7	9.836	GKS04-3M □□□080C13	106
	81	41	4.3		98	34	5.3	11.730	GKS04-3M □□□080C13	106
					89	38	4.4	13.067	GKS04-3M □□□080C13	106
	72	47	3.6					13.176	GKS05-3M □□□080C13	106
	66	51	3.2		80	41	4.0	14.333	GKS04-3M □□□080C13	106
	59	57	3.2		72	47	3.9	16.087	GKS04-3M □□□080C13	106
	53	63	2.6		64	52	3.2	17.920	GKS04-3M □□□080C13	106
	46	73	2.5		56	60	3.1	20.588	GKS04-3M □□□080C13	106
	42	80	2.3		51	65	2.8	22.522	GKS04-3M □□□080C13	106
	38	89	1.9		46	73	2.3	25.088	GKS04-3M □□□080C13	106
	33	101	1.8		40	83	2.2	28.727	GKS04-3M □□□080C13	106
	32	106	3.1		38	87	3.8	29.931	GKS05-3M □□□080C13	106
	30	113	1.5		36	93	1.8	32.000	GKS04-3M □□□080C13	106
	29	116	2.9		35	95	3.5	32.744	GKS05-3M □□□080C13	106
	27	124	1.5		33	102	1.8	35.191	GKS04-3M □□□080C13	106
	26	130	2.3		31	107	2.8	36.894	GKS05-3M □□□080C13	106
	24	138	1.2		29	113	1.5	39.200	GKS04-3M □□□080C13	106
	23	148	2.2		28	121	2.7	41.765	GKS05-3M □□□080C13	106
	22	156	1.2		26	128	1.4	44.240	GKS04-3M □□□080C13	106
	20	166	1.8		24	136	2.2	47.059	GKS05-3M □□□080C13	106
	19	180	1.0		23	147	1.2	50.943	GKS04-3M □□□080C13	106
	19	181	1.8		23	148	2.2	51.162	GKS05-3M □□□080C13	106
	17	201	0.9		20	165	1.1	56.976	GKS04-3M □□□080C13	106
	17	204	1.5		20	167	1.8	57.647	GKS05-3M □□□080C13	106
	15	230	2.7		18	189	3.3	65.207	GKS06-3M □□□080C13	106
	14	235	1.4		17	193	1.7	66.592	GKS05-3M □□□080C13	106
	13	254	2.8		16	208	3.4	72.000	GKS06-3M □□□080C13	106
	13	265	1.2		15	217	1.4	75.033	GKS05-3M □□□080C13	106
	12	287	2.2		14	235	2.7	81.111	GKS06-3M □□□080C13	106
	12	293	1.1		14	240	1.4	82.833	GKS05-3M □□□080C13	106
	10	329	2.1		12	270	2.6	93.176	GKS06-3M □□□080C13	106
	10	330	1.0		12	270	1.2	93.333	GKS05-3M □□□080C13	106
	9.2	360	1.9		11	295	2.3	103.721	GKS06-4M □□□080C13	122
	9.1	371	1.7		11	304	2.1	104.967	GKS06-3M □□□080C13	106
	8.9	379	0.9		11	310	1.1	107.196	GKS05-3M □□□080C13	106
	8.5	390	2.7		10	320	3.3	112.391	GKS07-4M □□□080C13	122



Selection tables

50 Hz, 60 Hz: P_N = 0.37 kW

n_N	950 r/min				1160 r/min			i		
f_N	50 Hz				60 Hz					
	n_2 [r/min]	M_2 [Nm]	c		n_2 [r/min]	M_2 [Nm]	c			
	8.4	399	1.8		10	327	2.1	113.082	GKS06-3M □□□080C13	106
	8.4	393	1.4		10	322	1.7	113.205	GKS06-4M □□□080C13	122
	7.5	438	3.0		9.1	359	3.6	126.222	GKS07-4M □□□080C13	122
	7.5	447	2.7		9.1	366	3.3	126.578	GKS07-3M □□□080C13	106
	7.5	441	1.6		9.1	361	1.9	127.059	GKS06-4M □□□080C13	122
	7.5	450	1.4		9.0	369	1.7	127.392	GKS06-3M □□□080C13	106
	6.9	478	2.2		8.4	392	2.7	137.748	GKS07-4M □□□080C13	122
	6.8	489	1.1		8.2	400	1.3	140.816	GKS06-4M □□□080C13	122
	6.7	505	1.4		8.1	414	1.7	142.941	GKS06-3M □□□080C13	106
	6.1	537	2.4		7.4	440	3.0	154.622	GKS07-4M □□□080C13	122
	6.1	541	1.3		7.4	443	1.6	155.647	GKS06-4M □□□080C13	122
	5.9	569	1.1		7.1	466	1.4	161.029	GKS06-3M □□□080C13	106
	5.5	605	0.9		6.6	496	1.1	174.336	GKS06-4M □□□080C13	122
	5.3	622	1.7		6.4	510	2.1	179.201	GKS07-4M □□□080C13	122
	5.2	652	2.0		6.2	534	2.5	184.600	GKS07-3M □□□080C13	106
	5.0	672	1.0		6.1	550	1.3	190.080	GKS06-3M □□□080C13	106
	4.7	699	1.9		5.7	572	2.3	201.254	GKS07-4M □□□080C13	122
	4.7	704	1.0		5.7	576	1.2	202.588	GKS06-4M □□□080C13	122
	4.6	735	1.7		5.5	602	2.0	208.000	GKS07-3M □□□080C13	106
	4.4	756	0.8		5.4	620	1.0	214.133	GKS06-3M □□□080C13	106
	4.3	774	1.4		5.2	634	1.7	222.909	GKS07-4M □□□080C13	122
	4.2	791	1.7		5.1	648	2.1	224.037	GKS07-3M □□□080C13	106
	4.1	815	0.9		5.0	667	1.1	230.688	GKS06-3M □□□080C13	106
	3.9	857	1.5		4.7	701	1.9	246.659	GKS07-4M □□□080C13	122
	3.8	875	0.8		4.6	717	1.0	252.000	GKS06-4M □□□080C13	122
	3.8	892	1.4		4.6	730	1.7	252.436	GKS07-3M □□□080C13	106
	3.5	949	1.1		4.2	777	1.4	273.199	GKS07-4M □□□080C13	122
	3.4	1000	1.3		4.1	819	1.6	283.193	GKS07-3M □□□080C13	106
	3.0	1127	1.1		3.6	923	1.3	319.091	GKS07-3M □□□080C13	106
	3.0	1115	1.2		3.6	913	1.4	321.049	GKS07-4M □□□080C13	122
	2.9	1123	2.7		3.6	920	3.3	323.365	GKS09-4M □□□080C13	122
	2.7	1246	0.8		3.2	1021	1.0	358.829	GKS07-4M □□□080C13	122
	2.6	1266	2.4		3.2	1036	3.0	364.427	GKS09-4M □□□080C13	122
	2.4	1387	1.0		2.9	1136	1.2	399.353	GKS07-4M □□□080C13	122
	2.4	1397	2.2		2.9	1144	2.6	402.234	GKS09-4M □□□080C13	122
	2.1	1574	2.0		2.5	1289	2.4	453.311	GKS09-4M □□□080C13	122
	1.8	1808	1.7		2.2	1480	2.0	520.538	GKS09-4M □□□080C13	122
	1.6	2037	1.5		2.0	1668	1.8	586.638	GKS09-4M □□□080C13	122
	1.5	2194	1.4		1.8	1797	1.7	631.744	GKS09-4M □□□080C13	122
	1.3	2472	1.2		1.6	2025	1.5	711.965	GKS09-4M □□□080C13	122



Selection tables

50 Hz, 60 Hz: P_N = 0.37 kW

n_N	950 r/min				1160 r/min			i		
f_N	50 Hz				60 Hz					
	n_2 [r/min]	M_2 [Nm]	c		n_2 [r/min]	M_2 [Nm]	c			
	1.2	2835	2.1		1.4	2322	2.6	816.455	GKS11-4M □□□080C13	122
	1.2	2839	1.1		1.4	2325	1.3	817.551	GKS09-4M □□□080C13	122
	1.0	3195	1.9		1.3	2616	2.3	919.949	GKS11-4M □□□080C13	122
	1.0	3200	1.0		1.3	2620	1.2	921.367	GKS09-4M □□□080C13	122
	1.0	3441	1.7		1.2	2818	2.1	990.879	GKS11-4M □□□080C13	122
	1.0	3446	0.9		1.2	2822	1.1	992.209	GKS09-4M □□□080C13	122
	0.9	3877	1.6		1.0	3175	1.9	1116.484	GKS11-4M □□□080C13	122
	0.8	4350	1.4		0.9	3562	1.7	1252.516	GKS11-4M □□□080C13	122
	0.7	4901	1.2		0.8	4014	1.5	1411.286	GKS11-4M □□□080C13	122



Selection tables

50 Hz, 60 Hz: P_N = 0.55 kW

n_N	2630 r/min				3240 r/min			i		
f_N	50 Hz				60 Hz					
	n_2 [r/min]	M_2 [Nm]	c		n_2 [r/min]	M_2 [Nm]	c			
	513	9.7	4.1		631	7.9	4.7	5.123	GKS04-3M □□□071C31	106
	374	13	4.1		460	11	4.7	7.025	GKS04-3M □□□071C31	106
	322	15	4.1		396	13	4.7	8.167	GKS04-3M □□□071C31	106
	293	17	4.7		359	14	5.4	8.991	GKS04-3M □□□071C31	106
	267	19	4.7		328	15	5.4	9.836	GKS04-3M □□□071C31	106
	224	22	4.1		275	18	4.7	11.730	GKS04-3M □□□071C31	106
	201	25	4.1		247	20	4.7	13.067	GKS04-3M □□□071C31	106
	184	27	4.7		225	22	5.4	14.333	GKS04-3M □□□071C31	106
	164	31	4.1		201	25	4.7	16.087	GKS04-3M □□□071C31	106
	147	34	4.0		180	28	4.7	17.920	GKS04-3M □□□071C31	106
	128	39	3.9		157	32	4.4	20.588	GKS04-3M □□□071C31	106
	117	43	3.5		143	35	4.1	22.522	GKS04-3M □□□071C31	106
	105	48	2.9		129	39	3.3	25.088	GKS04-3M □□□071C31	106
	92	54	2.8		112	44	3.2	28.727	GKS04-3M □□□071C31	106
	82	61	2.3		101	49	2.6	32.000	GKS04-3M □□□071C31	106
	75	67	2.3		92	54	2.6	35.191	GKS04-3M □□□071C31	106
	67	74	1.9		82	60	2.2	39.200	GKS04-3M □□□071C31	106
	59	84	2.1		73	68	2.4	44.240	GKS04-3M □□□071C31	106
	56	89	3.2		69	72	3.7	47.059	GKS05-3M □□□071C31	106
	52	97	1.8		63	78	2.0	50.943	GKS04-3M □□□071C31	106
	46	108	1.6		57	88	1.9	56.976	GKS04-3M □□□071C31	106
	41	123	1.4		50	100	1.6	64.978	GKS04-3M □□□071C31	106
	40	126	2.5		49	103	2.8	66.592	GKS05-3M □□□071C31	106
	36	137	1.3		45	111	1.5	72.210	GKS04-3M □□□071C31	106
	35	142	2.1		43	116	2.4	75.033	GKS05-3M □□□071C31	106
	33	151	1.1		41	123	1.3	79.598	GKS04-3M □□□071C31	106
	32	157	2.0		39	128	2.3	82.833	GKS05-3M □□□071C31	106
	29	172	1.0		36	139	1.2	90.491	GKS04-3M □□□071C31	106
	28	177	1.7		35	144	1.9	93.333	GKS05-3M □□□071C31	106
	28	178	0.9		34	144	1.0	95.238	GKS05-4M □□□071C31	122
	26	190	0.9		32	154	1.1	100.067	GKS04-3M □□□071C31	106
	25	199	3.0		31	162	3.5	104.967	GKS06-3M □□□071C31	106
	25	203	1.5		30	165	1.8	107.196	GKS05-3M □□□071C31	106
	24	211	0.8		29	172	1.0	111.467	GKS04-3M □□□071C31	106
	23	211	2.5		29	171	3.1	113.205	GKS06-4M □□□071C31	122
	23	214	1.2		28	174	1.4	114.987	GKS05-4M □□□071C31	122
	22	229	1.4		27	186	1.7	120.784	GKS05-3M □□□071C31	106
	21	237	1.2		25	192	1.4	126.933	GKS05-4M □□□071C31	122
	21	237	2.9		25	192	3.5	127.059	GKS06-4M □□□071C31	122
	21	242	2.6		25	196	3.2	127.392	GKS06-3M □□□071C31	106



Selection tables

50 Hz, 60 Hz: P_N = 0.55 kW

n_N	2630 r/min				3240 r/min			i		
f_N	50 Hz				60 Hz					
	n_2 [r/min]	M_2 [Nm]	c		n_2 [r/min]	M_2 [Nm]	c			
	20	247	1.3		25	200	1.6	130.097	GKS05-3M □□□071C31	106
	19	263	2.0		23	213	2.5	140.816	GKS06-4M □□□071C31	122
	18	271	2.6		23	220	3.1	142.941	GKS06-3M □□□071C31	106
	18	278	1.1		22	226	1.4	146.588	GKS05-3M □□□071C31	106
	18	273	0.9		22	222	1.1	146.667	GKS05-4M □□□071C31	122
	17	290	2.4		21	236	2.9	155.647	GKS06-4M □□□071C31	122
	16	305	2.1		20	248	2.5	161.029	GKS06-3M □□□071C31	106
	16	302	0.9		20	245	1.1	161.905	GKS05-4M □□□071C31	122
	16	315	1.0		19	256	1.3	166.276	GKS05-3M □□□071C31	106
	15	325	1.7		19	264	2.0	174.336	GKS06-4M □□□071C31	122
	15	334	3.2		18	271	3.8	179.201	GKS07-4M □□□071C31	122
	14	346	1.0		17	281	1.1	185.547	GKS05-4M □□□071C31	122
	14	355	0.9		17	288	1.1	187.353	GKS05-3M □□□071C31	106
	14	361	1.9		17	293	2.3	190.080	GKS06-3M □□□071C31	106
	13	378	1.8		16	307	2.2	202.588	GKS06-4M □□□071C31	122
	13	390	0.8		15	316	1.0	209.067	GKS05-4M □□□071C31	122
	12	406	1.6		15	330	1.9	214.133	GKS06-3M □□□071C31	106
	12	416	2.5		15	337	3.0	222.909	GKS07-4M □□□071C31	122
	12	419	1.3		14	340	1.5	224.524	GKS06-4M □□□071C31	122
	11	438	1.6		14	355	1.9	230.688	GKS06-3M □□□071C31	106
	10	470	1.5		13	381	1.8	252.000	GKS06-4M □□□071C31	122
	10	493	1.3		12	400	1.5	259.880	GKS06-3M □□□071C31	106
	9.6	509	2.1		12	414	2.5	273.199	GKS07-4M □□□071C31	122
	9.4	521	1.0		12	423	1.2	279.286	GKS06-4M □□□071C31	122
	9.0	553	1.3		11	449	1.5	291.600	GKS06-3M □□□071C31	106
	8.3	591	1.2		10	479	1.4	316.800	GKS06-4M □□□071C31	122
	8.2	599	2.2		10	486	2.6	321.049	GKS07-4M □□□071C31	122
	8.0	623	1.0		9.8	506	1.2	328.500	GKS06-3M □□□071C31	106
	7.3	669	1.6		9.0	543	1.9	358.829	GKS07-4M □□□071C31	122
	6.6	745	1.8		8.1	604	2.1	399.353	GKS07-4M □□□071C31	122
	6.5	761	0.9		7.9	618	1.1	408.000	GKS06-4M □□□071C31	122
	5.7	866	1.2		7.0	703	1.5	464.367	GKS07-4M □□□071C31	122
	5.1	964	1.4		6.3	782	1.6	516.810	GKS07-4M □□□071C31	122
	4.7	1051	1.0		5.7	853	1.2	563.572	GKS07-4M □□□071C31	122
	4.1	1187	1.1		5.1	964	1.3	636.581	GKS07-4M □□□071C31	122
	3.9	1275	0.8		4.7	1035	1.0	683.972	GKS07-4M □□□071C31	122
	3.2	1524	2.0		4.0	1237	2.4	817.551	GKS09-4M □□□071C31	122
	3.2	1536	0.9		3.9	1247	1.0	823.810	GKS07-4M □□□071C31	122
	2.9	1718	1.8		3.5	1395	2.2	921.367	GKS09-4M □□□071C31	122
	2.7	1850	1.6		3.3	1502	2.0	992.209	GKS09-4M □□□071C31	122



Selection tables

50 Hz, 60 Hz: P_N = 0.55 kW

n_N	2630 r/min				3240 r/min			i		
f_N	50 Hz				60 Hz					
	n_2 [r/min]	M_2 [Nm]	c		n_2 [r/min]	M_2 [Nm]	c			
	2.4	2085	1.5		2.9	1692	1.8	1118.204	GKS09-4M □□□071C31	122
	2.1	2339	1.3		2.6	1898	1.6	1254.197	GKS09-4M □□□071C31	122
	1.9	2636	1.2		2.3	2139	1.4	1413.461	GKS09-4M □□□071C31	122



Selection tables

50 Hz, 60 Hz: P_N = 0.55 kW

n_N	1405 r/min				1720 r/min			i		
f_N	50 Hz				60 Hz					
	n_2 [r/min]	M_2 [Nm]	c		n_2 [r/min]	M_2 [Nm]	c			
	274	18	4.4		333	15	5.2	5.123	GKS04-3M □□□071C42	106
	200	25	3.7		243	20	4.3	7.025	GKS04-3M □□□071C42	106
	172	29	4.4		209	24	5.2	8.167	GKS04-3M □□□071C42	106
	156	32	3.2		190	26	3.8	8.991	GKS04-3M □□□071C42	106
	143	35	3.0		173	29	3.6	9.836	GKS04-3M □□□071C42	106
	120	42	4.3		145	34	5.1	11.730	GKS04-3M □□□071C42	106
					132	38	4.2	13.067	GKS04-3M □□□071C42	106
	107	47	3.5		129	38	4.1	13.176	GKS05-3M □□□071C42	106
	98	51	3.2		119	42	3.8	14.333	GKS04-3M □□□071C42	106
	87	57	3.2		106	47	3.7	16.087	GKS04-3M □□□071C42	106
	78	64	2.6		95	52	3.1	17.920	GKS04-3M □□□071C42	106
	68	73	2.5		83	60	2.9	20.588	GKS04-3M □□□071C42	106
	62	80	2.3		76	65	2.7	22.522	GKS04-3M □□□071C42	106
	56	89	1.9		68	73	2.2	25.088	GKS04-3M □□□071C42	106
	49	102	1.8		59	83	2.1	28.727	GKS04-3M □□□071C42	106
	47	106	3.1		57	87	3.6	29.931	GKS05-3M □□□071C42	106
	44	114	1.5		53	93	1.7	32.000	GKS04-3M □□□071C42	106
	43	116	2.8		52	95	3.3	32.744	GKS05-3M □□□071C42	106
	40	125	1.5		49	102	1.7	35.191	GKS04-3M □□□071C42	106
	38	131	2.3		46	107	2.7	36.894	GKS05-3M □□□071C42	106
	36	139	1.2		44	114	1.4	39.200	GKS04-3M □□□071C42	106
	34	148	2.2		41	121	2.6	41.765	GKS05-3M □□□071C42	106
	32	157	1.2		39	128	1.4	44.240	GKS04-3M □□□071C42	106
	30	167	1.8		36	136	2.2	47.059	GKS05-3M □□□071C42	106
	28	181	1.0		34	148	1.2	50.943	GKS04-3M □□□071C42	106
	28	182	1.8		33	148	2.2	51.162	GKS05-3M □□□071C42	106
	25	202	0.9		30	165	1.1	56.976	GKS04-3M □□□071C42	106
	24	205	1.5		30	167	1.8	57.647	GKS05-3M □□□071C42	106
	22	232	2.7		26	189	3.3	65.207	GKS06-3M □□□071C42	106
	21	236	1.4		26	193	1.7	66.592	GKS05-3M □□□071C42	106
	20	256	2.7		24	209	3.4	72.000	GKS06-3M □□□071C42	106
	19	266	1.2		23	218	1.4	75.033	GKS05-3M □□□071C42	106
	17	288	2.2		21	235	2.7	81.111	GKS06-3M □□□071C42	106
	17	294	1.1		21	240	1.4	82.833	GKS05-3M □□□071C42	106
	15	331	2.1		18	270	2.6	93.176	GKS06-3M □□□071C42	106
	15	331	1.0		18	271	1.2	93.333	GKS05-3M □□□071C42	106
	14	362	1.9		16	296	2.3	103.721	GKS06-4M □□□071C42	122
	13	373	1.7		16	304	2.1	104.967	GKS06-3M □□□071C42	106
	13	381	0.9		16	311	1.1	107.196	GKS05-3M □□□071C42	106
	13	392	2.7		15	320	3.3	112.391	GKS07-4M □□□071C42	122



Selection tables

50 Hz, 60 Hz: P_N = 0.55 kW

n_N	1405 r/min				1720 r/min			i		
f_N	50 Hz				60 Hz					
	n_2 [r/min]	M_2 [Nm]	c		n_2 [r/min]	M_2 [Nm]	c			
	12	402	1.7		15	328	2.1	113.082	GKS06-3M □□□071C42	106
	12	395	1.4		15	323	1.7	113.205	GKS06-4M □□□071C42	122
	11	441	3.0		14	360	3.6	126.222	GKS07-4M □□□071C42	122
	11	443	1.6		13	362	1.9	127.059	GKS06-4M □□□071C42	122
	11	452	1.4		13	369	1.7	127.392	GKS06-3M □□□071C42	106
	10	481	2.2		12	393	2.7	137.748	GKS07-4M □□□071C42	122
	10	492	1.1		12	401	1.3	140.816	GKS06-4M □□□071C42	122
	9.8	508	1.4		12	415	1.7	142.941	GKS06-3M □□□071C42	106
	9.1	540	2.4		11	441	2.9	154.622	GKS07-4M □□□071C42	122
	9.0	543	1.3		11	444	1.6	155.647	GKS06-4M □□□071C42	122
	8.7	572	1.1		11	467	1.4	161.029	GKS06-3M □□□071C42	106
	8.1	608	0.9		9.8	497	1.1	174.336	GKS06-4M □□□071C42	122
	7.8	625	1.7		9.5	511	2.1	179.201	GKS07-4M □□□071C42	122
	7.4	675	1.0		9.0	551	1.3	190.080	GKS06-3M □□□071C42	106
	7.0	702	1.9		8.5	574	2.3	201.254	GKS07-4M □□□071C42	122
	6.9	707	1.0		8.4	578	1.2	202.588	GKS06-4M □□□071C42	122
	6.6	760	0.8		8.0	621	1.0	214.133	GKS06-3M □□□071C42	106
	6.3	778	1.4		7.7	636	1.7	222.909	GKS07-4M □□□071C42	122
	6.1	819	0.9		7.4	669	1.0	230.688	GKS06-3M □□□071C42	106
	5.7	861	1.5		6.9	703	1.9	246.659	GKS07-4M □□□071C42	122
	5.1	954	1.1		6.2	779	1.4	273.199	GKS07-4M □□□071C42	122
	4.4	1121	1.2		5.3	915	1.4	321.049	GKS07-4M □□□071C42	122
	4.3	1129	2.7		5.3	922	3.3	323.365	GKS09-4M □□□071C42	122
	3.9	1252	0.8		4.8	1023	1.0	358.829	GKS07-4M □□□071C42	122
	3.9	1272	2.4		4.7	1039	3.0	364.427	GKS09-4M □□□071C42	122
	3.5	1394	0.9		4.3	1139	1.2	399.353	GKS07-4M □□□071C42	122
	3.5	1404	2.2		4.2	1147	2.6	402.234	GKS09-4M □□□071C42	122
	3.1	1582	1.9		3.8	1292	2.4	453.311	GKS09-4M □□□071C42	122
	2.7	1817	1.7		3.3	1484	2.0	520.538	GKS09-4M □□□071C42	122
	2.4	2048	1.5		2.9	1673	1.8	586.638	GKS09-4M □□□071C42	122
	2.2	2205	1.4		2.7	1801	1.7	631.744	GKS09-4M □□□071C42	122
	2.0	2485	1.2		2.4	2030	1.5	711.965	GKS09-4M □□□071C42	122
	1.7	2854	1.1		2.1	2331	1.3	817.551	GKS09-4M □□□071C42	122
	1.5	3216	1.0		1.9	2627	1.2	921.367	GKS09-4M □□□071C42	122
	1.4	3463	0.9		1.7	2829	1.1	992.209	GKS09-4M □□□071C42	122



Selection tables

50 Hz, 60 Hz: P_N = 0.55 kW

n_N	930 r/min				1140 r/min			i		
f_N	50 Hz				60 Hz					
	n_2 [r/min]	M_2 [Nm]	c		n_2 [r/min]	M_2 [Nm]	c			
	182	27	2.9		221	22	3.6	5.123	GKS04-3M □□□080C33	106
	132	38	2.5		161	31	3.0	7.025	GKS04-3M □□□080C33	106
	114	44	2.9		138	36	3.6	8.167	GKS04-3M □□□080C33	106
	103	48	2.1		126	39	2.6	8.991	GKS04-3M □□□080C33	106
	95	53	2.0		115	43	2.5	9.836	GKS04-3M □□□080C33	106
	79	63	2.9		96	51	3.5	11.730	GKS04-3M □□□080C33	106
	71	70	2.4		87	57	2.9	13.067	GKS04-3M □□□080C33	106
	71	71	2.3		86	58	2.9	13.176	GKS05-3M □□□080C33	106
	65	77	2.1		79	63	2.6	14.333	GKS04-3M □□□080C33	106
	58	86	2.1		70	70	2.6	16.087	GKS04-3M □□□080C33	106
	52	96	1.7		63	78	2.1	17.920	GKS04-3M □□□080C33	106
	48	103	2.9		59	84	3.5	19.216	GKS05-3M □□□080C33	106
	45	110	1.6		55	90	2.0	20.588	GKS04-3M □□□080C33	106
	41	121	1.5		50	99	1.8	22.522	GKS04-3M □□□080C33	106
	37	135	1.2		45	110	1.5	25.088	GKS04-3M □□□080C33	106
	32	154	1.2		39	126	1.5	28.727	GKS04-3M □□□080C33	106
	31	161	2.1		38	131	2.5	29.931	GKS05-3M □□□080C33	106
	29	172	1.0		35	140	1.2	32.000	GKS04-3M □□□080C33	106
	28	176	1.9		35	143	2.3	32.744	GKS05-3M □□□080C33	106
	26	189	1.0		32	154	1.2	35.191	GKS04-3M □□□080C33	106
	25	198	1.5		31	161	1.9	36.894	GKS05-3M □□□080C33	106
	22	224	1.5		27	183	1.8	41.765	GKS05-3M □□□080C33	106
	20	252	1.2		24	206	1.5	47.059	GKS05-3M □□□080C33	106
	18	274	1.2		22	224	1.5	51.162	GKS05-3M □□□080C33	106
	16	309	1.0		20	252	1.2	57.647	GKS05-3M □□□080C33	106
	16	310	2.2		20	253	2.7	57.882	GKS06-3M □□□080C33	106
	14	350	1.8		17	285	2.2	65.207	GKS06-3M □□□080C33	106
	14	357	0.9		17	291	1.1	66.592	GKS05-3M □□□080C33	106
	13	386	1.8		16	315	2.2	72.000	GKS06-3M □□□080C33	106
	12	435	1.4		14	355	1.8	81.111	GKS06-3M □□□080C33	106
	10	497	2.6		12	405	3.2	92.563	GKS07-3M □□□080C33	106
	10	500	1.4		12	408	1.7	93.176	GKS06-3M □□□080C33	106
	9.0	543	2.4		11	443	2.9	103.039	GKS07-4M □□□080C33	122
	9.0	547	1.3		11	446	1.5	103.721	GKS06-4M □□□080C33	122
	8.9	559	2.2		11	456	2.7	104.296	GKS07-3M □□□080C33	106
	8.9	563	1.1		11	459	1.4	104.967	GKS06-3M □□□080C33	106
	8.3	603	2.2		10	492	2.7	112.338	GKS07-3M □□□080C33	106
	8.3	593	1.8		10	483	2.2	112.391	GKS07-4M □□□080C33	122
	8.2	607	1.2		10	495	1.4	113.082	GKS06-3M □□□080C33	106
	8.2	597	0.9		10	487	1.1	113.205	GKS06-4M □□□080C33	122



Selection tables

50 Hz, 60 Hz: P_N = 0.55 kW

n_N	930 r/min				1140 r/min			i		
f_N	50 Hz				60 Hz					
	n_2 [r/min]	M_2 [Nm]	c		n_2 [r/min]	M_2 [Nm]	c			
	7.4	666	2.0		9.0	543	2.4	126.222	GKS07-4M □□□080C33	122
	7.4	679	1.8		8.9	554	2.2	126.578	GKS07-3M □□□080C33	106
	7.3	670	1.0		8.9	547	1.3	127.059	GKS06-4M □□□080C33	122
	7.3	683	0.9		8.9	557	1.1	127.392	GKS06-3M □□□080C33	106
	6.8	726	1.4		8.2	593	1.8	137.748	GKS07-4M □□□080C33	122
	6.5	767	0.9		7.9	626	1.1	142.941	GKS06-3M □□□080C33	106
	6.0	815	1.6		7.3	665	2.0	154.622	GKS07-4M □□□080C33	122
	6.0	821	0.8		7.3	670	1.0	155.647	GKS06-4M □□□080C33	122
	5.2	945	1.1		6.3	771	1.4	179.201	GKS07-4M □□□080C33	122
	5.0	990	1.3		6.1	808	1.6	184.600	GKS07-3M □□□080C33	106
	4.6	1061	1.2		5.6	866	1.5	201.254	GKS07-4M □□□080C33	122
	4.5	1116	1.1		5.4	910	1.3	208.000	GKS07-3M □□□080C33	106
	4.2	1175	0.9		5.1	959	1.1	222.909	GKS07-4M □□□080C33	122
	4.2	1202	1.1		5.0	980	1.4	224.037	GKS07-3M □□□080C33	106
	3.8	1301	1.0		4.6	1061	1.2	246.659	GKS07-4M □□□080C33	122
	3.7	1354	0.9		4.5	1105	1.1	252.436	GKS07-3M □□□080C33	106
	3.3	1519	0.9		4.0	1239	1.1	283.193	GKS07-3M □□□080C33	106
	2.9	1705	1.8		3.5	1391	2.2	323.365	GKS09-4M □□□080C33	122
	2.6	1922	1.6		3.1	1568	2.0	364.427	GKS09-4M □□□080C33	122
	2.3	2121	1.4		2.8	1730	1.8	402.234	GKS09-4M □□□080C33	122
	2.1	2390	1.3		2.5	1950	1.6	453.311	GKS09-4M □□□080C33	122
	1.8	2745	1.1		2.2	2239	1.4	520.538	GKS09-4M □□□080C33	122
	1.6	3093	1.0		1.9	2524	1.2	586.638	GKS09-4M □□□080C33	122
	1.5	3331	0.9		1.8	2718	1.1	631.744	GKS09-4M □□□080C33	122
	1.3	3754	0.8		1.6	3063	1.0	711.965	GKS09-4M □□□080C33	122
	1.1	4305	1.4		1.4	3512	1.7	816.455	GKS11-4M □□□080C33	122
	1.0	4851	1.3		1.2	3957	1.5	919.949	GKS11-4M □□□080C33	122
	0.9	5225	1.1		1.1	4262	1.4	990.879	GKS11-4M □□□080C33	122
	0.8	5887	1.0		1.0	4803	1.3	1116.484	GKS11-4M □□□080C33	122
	0.7	6605	0.9		0.9	5388	1.1	1252.516	GKS11-4M □□□080C33	122
	0.7	7442	0.8		0.8	6071	1.0	1411.286	GKS11-4M □□□080C33	122



Selection tables

50 Hz, 60 Hz: P_N = 0.75 kW

n_N	1410 r/min				1720 r/min			i		
f_N	50 Hz				60 Hz					
	n_2 [r/min]	M_2 [Nm]	c		n_2 [r/min]	M_2 [Nm]	c			
	275	25	3.3		334	20	3.8	5.123	GKS04-3M □□□080C32	108
	201	34	2.7		243	28	3.2	7.025	GKS04-3M □□□080C32	108
	173	39	3.3		209	32	3.8	8.167	GKS04-3M □□□080C32	108
	157	43	2.4		190	36	2.8	8.991	GKS04-3M □□□080C32	108
	143	47	2.2		174	39	2.6	9.836	GKS04-3M □□□080C32	108
	120	57	3.2		146	46	3.7	11.730	GKS04-3M □□□080C32	108
	108	63	2.6		131	52	3.1	13.067	GKS04-3M □□□080C32	108
	107	64	2.6		130	52	3.0	13.176	GKS05-3M □□□080C32	108
	98	69	2.4		119	57	2.8	14.333	GKS04-3M □□□080C32	108
	88	78	2.3		106	64	2.7	16.087	GKS04-3M □□□080C32	108
	79	86	1.9		95	71	2.2	17.920	GKS04-3M □□□080C32	108
	73	93	3.2		90	76	3.7	19.216	GKS05-3M □□□080C32	108
	69	99	1.8		83	81	2.1	20.588	GKS04-3M □□□080C32	108
	63	109	1.7		76	89	2.0	22.522	GKS04-3M □□□080C32	108
	56	121	1.4		68	99	1.6	25.088	GKS04-3M □□□080C32	108
	49	139	1.3		60	114	1.5	28.727	GKS04-3M □□□080C32	108
	47	144	2.3		57	118	2.7	29.931	GKS05-3M □□□080C32	108
	44	154	1.1		53	127	1.3	32.000	GKS04-3M □□□080C32	108
	43	158	2.1		52	130	2.4	32.744	GKS05-3M □□□080C32	108
	40	170	1.1		49	139	1.3	35.191	GKS04-3M □□□080C32	108
	38	178	1.7		46	146	2.0	36.894	GKS05-3M □□□080C32	108
	36	189	0.9		44	155	1.0	39.200	GKS04-3M □□□080C32	108
	34	202	1.6		41	165	1.9	41.765	GKS05-3M □□□080C32	108
	32	213	0.9		39	175	1.1	44.240	GKS04-3M □□□080C32	108
	30	227	1.3		36	186	1.6	47.059	GKS05-3M □□□080C32	108
	28	247	1.3		33	202	1.6	51.162	GKS05-3M □□□080C32	108
	25	278	1.1		30	228	1.3	57.647	GKS05-3M □□□080C32	108
	24	279	2.5		30	229	3.0	57.882	GKS06-3M □□□080C32	108
	22	315	2.0		26	258	2.4	65.207	GKS06-3M □□□080C32	108
	21	321	1.0		26	263	1.3	66.592	GKS05-3M □□□080C32	108
	20	347	2.0		24	285	2.5	72.000	GKS06-3M □□□080C32	108
	19	362	0.9		23	297	1.0	75.033	GKS05-3M □□□080C32	108
	17	391	1.6		21	321	2.0	81.111	GKS06-3M □□□080C32	108
	17	400	0.8		21	328	1.0	82.833	GKS05-3M □□□080C32	108
	15	447	2.9		19	366	3.5	92.563	GKS07-3M □□□080C32	108
	15	450	1.6		18	369	1.9	93.176	GKS06-3M □□□080C32	108
	14	489	2.6		17	401	3.2	103.039	GKS07-4M □□□080C32	124
	14	492	1.4		17	403	1.7	103.721	GKS06-4M □□□080C32	124
	14	503	2.4		16	413	2.9	104.296	GKS07-3M □□□080C32	108
	13	506	1.3		16	415	1.5	104.967	GKS06-3M □□□080C32	108



Selection tables

50 Hz, 60 Hz: P_N = 0.75 kW

n_N	1410 r/min				1720 r/min			i		
f_N	50 Hz				60 Hz					
	n_2 [r/min]	M_2 [Nm]	c		n_2 [r/min]	M_2 [Nm]	c			
	13	542	2.5		15	444	3.0	112.338	GKS07-3M □□□080C32	108
	13	533	2.0		15	437	2.4	112.391	GKS07-4M □□□080C32	124
	13	546	1.3		15	447	1.6	113.082	GKS06-3M □□□080C32	108
	13	537	1.0		15	440	1.2	113.205	GKS06-4M □□□080C32	124
	11	599	2.2		14	491	2.6	126.222	GKS07-4M □□□080C32	124
	11	611	2.0		14	501	2.4	126.578	GKS07-3M □□□080C32	108
	11	603	1.1		14	494	1.4	127.059	GKS06-4M □□□080C32	124
	11	615	1.0		13	504	1.3	127.392	GKS06-3M □□□080C32	108
	10	653	1.6		12	536	2.0	137.748	GKS07-4M □□□080C32	124
	10	668	0.8		12	547	1.0	140.816	GKS06-4M □□□080C32	124
	9.9	690	1.0		12	565	1.2	142.941	GKS06-3M □□□080C32	108
	9.1	733	1.8		11	601	2.2	154.622	GKS07-4M □□□080C32	124
	9.1	738	0.9		11	605	1.1	155.647	GKS06-4M □□□080C32	124
	8.8	777	0.8		11	637	1.0	161.029	GKS06-3M □□□080C32	108
	7.9	850	1.2		9.5	697	1.5	179.201	GKS07-4M □□□080C32	124
	7.6	891	1.5		9.3	730	1.8	184.600	GKS07-3M □□□080C32	108
	7.0	954	1.4		8.5	782	1.7	201.254	GKS07-4M □□□080C32	124
	6.8	1004	1.2		8.2	823	1.5	208.000	GKS07-3M □□□080C32	108
	6.3	1057	1.0		7.7	867	1.2	222.909	GKS07-4M □□□080C32	124
	6.3	1081	1.2		7.6	886	1.5	224.037	GKS07-3M □□□080C32	108
	5.7	1170	1.1		6.9	959	1.4	246.659	GKS07-4M □□□080C32	124
	5.6	1218	1.0		6.8	998	1.2	252.436	GKS07-3M □□□080C32	108
	5.2	1296	0.8		6.3	1062	1.0	273.199	GKS07-4M □□□080C32	124
	5.0	1366	1.0		6.0	1120	1.2	283.193	GKS07-3M □□□080C32	108
	4.4	1523	0.9		5.3	1248	1.1	321.049	GKS07-4M □□□080C32	124
	4.4	1534	2.0		5.3	1257	2.4	323.365	GKS09-4M □□□080C32	124
	3.9	1728	1.8		4.7	1417	2.2	364.427	GKS09-4M □□□080C32	124
	3.5	1908	1.6		4.3	1564	1.9	402.234	GKS09-4M □□□080C32	124
	3.1	2150	1.4		3.8	1762	1.7	453.311	GKS09-4M □□□080C32	124
	2.7	2469	1.2		3.3	2024	1.5	520.538	GKS09-4M □□□080C32	124
	2.4	2782	1.1		2.9	2281	1.4	586.638	GKS09-4M □□□080C32	124
	2.2	2996	1.0		2.7	2456	1.2	631.744	GKS09-4M □□□080C32	124
	2.0	3377	0.9		2.4	2768	1.1	711.965	GKS09-4M □□□080C32	124
	1.7	3872	1.5		2.1	3174	1.9	816.455	GKS11-4M □□□080C32	124
	1.5	4363	1.4		1.9	3577	1.7	919.949	GKS11-4M □□□080C32	124
	1.4	4699	1.3		1.7	3852	1.6	990.879	GKS11-4M □□□080C32	124
	1.3	5295	1.1		1.5	4341	1.4	1116.484	GKS11-4M □□□080C32	124
	1.1	5940	1.0		1.4	4870	1.2	1252.516	GKS11-4M □□□080C32	124
	1.0	6693	0.9		1.2	5487	1.1	1411.286	GKS11-4M □□□080C32	124



Selection tables

50 Hz, 60 Hz: P_N = 1.1 kW

n_N	1430 r/min				1740 r/min			i		
f_N	50 Hz				60 Hz					
	n_2 [r/min]	M_2 [Nm]	c		n_2 [r/min]	M_2 [Nm]	c			
	279	36	2.3		338	29	2.6	5.123	GKS04-3M □□□090C12	108
	208	48	3.1		252	39	3.6	6.863	GKS05-3M □□□090C12	108
	204	49	1.9		246	40	2.2	7.025	GKS04-3M □□□090C12	108
	175	57	2.3		212	47	2.6	8.167	GKS04-3M □□□090C12	108
	159	63	1.6		192	52	1.9	8.991	GKS04-3M □□□090C12	108
	152	66	2.5		184	54	2.9	9.412	GKS05-3M □□□090C12	108
	145	69	1.5		176	56	1.8	9.836	GKS04-3M □□□090C12	108
	135	74	3.1		164	61	3.6	10.569	GKS05-3M □□□090C12	108
	123	81	3.1		148	67	3.6	11.667	GKS05-3M □□□090C12	108
	122	82	2.2		148	67	2.5	11.730	GKS04-3M □□□090C12	108
	109	91	1.8		132	75	2.1	13.067	GKS04-3M □□□090C12	108
	109	92	1.8		131	76	2.1	13.176	GKS05-3M □□□090C12	108
	100	100	1.6		121	82	1.9	14.333	GKS04-3M □□□090C12	108
	99	101	2.5		119	83	2.9	14.494	GKS05-3M □□□090C12	108
	89	112	2.5		108	92	2.9	16.000	GKS05-3M □□□090C12	108
	89	112	1.6		108	92	1.9	16.087	GKS04-3M □□□090C12	108
	84	119	2.6		101	98	3.1	17.054	GKS05-3M □□□090C12	108
	80	125	1.3		97	103	1.5	17.920	GKS04-3M □□□090C12	108
	74	134	2.2		90	110	2.6	19.216	GKS05-3M □□□090C12	108
	70	144	1.3		84	118	1.5	20.588	GKS04-3M □□□090C12	108
	64	157	1.2		77	129	1.3	22.522	GKS04-3M □□□090C12	108
	61	163	2.0		74	134	2.3	23.388	GKS05-3M □□□090C12	108
	57	175	1.0		69	144	1.1	25.088	GKS04-3M □□□090C12	108
	54	184	1.6		66	151	1.9	26.353	GKS05-3M □□□090C12	108
	50	200	0.9		60	165	1.1	28.727	GKS04-3M □□□090C12	108
	48	209	1.6		58	172	1.8	29.931	GKS05-3M □□□090C12	108
	45	224	2.7		54	184	3.2	32.063	GKS06-3M □□□090C12	108
	44	228	1.4		53	188	1.7	32.744	GKS05-3M □□□090C12	108
	39	253	2.7		48	208	3.1	36.303	GKS06-3M □□□090C12	108
	39	257	1.2		47	212	1.4	36.894	GKS05-3M □□□090C12	108
	34	291	1.1		41	239	1.3	41.765	GKS05-3M □□□090C12	108
	32	310	2.2		39	255	2.7	44.471	GKS06-3M □□□090C12	108
	30	328	0.9		37	270	1.1	47.059	GKS05-3M □□□090C12	108
	28	357	0.9		34	293	1.1	51.162	GKS05-3M □□□090C12	108
	27	370	1.9		33	304	2.3	53.074	GKS06-3M □□□090C12	108
	25	404	1.7		30	332	2.1	57.882	GKS06-3M □□□090C12	108
	22	452	2.6		27	372	3.2	64.790	GKS07-3M □□□090C12	108
	22	455	1.4		27	374	1.7	65.207	GKS06-3M □□□090C12	108
	20	492	2.7		25	404	3.3	70.474	GKS07-3M □□□090C12	108
	20	502	1.4		24	413	1.7	72.000	GKS06-3M □□□090C12	108



Selection tables

50 Hz, 60 Hz: P_N = 1.1 kW

n_N	1430 r/min				1740 r/min			i		
f_N	50 Hz				60 Hz					
	n_2 [r/min]	M_2 [Nm]	c		n_2 [r/min]	M_2 [Nm]	c			
	18	554	2.2		22	455	2.6	79.407	GKS07-3M □□□090C12	108
	18	566	1.1		21	465	1.4	81.111	GKS06-3M □□□090C12	108
	15	646	2.1		19	531	2.5	92.563	GKS07-3M □□□090C12	108
	15	650	1.1		19	534	1.3	93.176	GKS06-3M □□□090C12	108
	14	707	1.8		17	581	2.2	103.039	GKS07-4M □□□090C12	124
	14	711	1.0		17	585	1.2	103.721	GKS06-4M □□□090C12	124
	14	728	1.7		17	598	2.0	104.296	GKS07-3M □□□090C12	108
	14	732	0.9		17	602	1.1	104.967	GKS06-3M □□□090C12	108
	13	784	1.7		15	644	2.1	112.338	GKS07-3M □□□090C12	108
	13	771	1.4		15	634	1.7	112.391	GKS07-4M □□□090C12	124
	13	789	0.9		15	648	1.1	113.082	GKS06-3M □□□090C12	108
	11	866	1.5		14	711	1.8	126.222	GKS07-4M □□□090C12	124
	11	883	1.4		14	726	1.7	126.578	GKS07-3M □□□090C12	108
	10	945	1.1		13	776	1.4	137.748	GKS07-4M □□□090C12	124
	10	953	3.2		13	783	3.9	138.929	GKS09-4M □□□090C12	124
	10	981	1.4		12	806	1.7	140.548	GKS07-3M □□□090C12	108
	10	983	2.7		12	808	3.3	140.921	GKS09-3M □□□090C12	108
	9.5	1036	2.9		12	851	3.6	151.012	GKS09-4M □□□090C12	124
	9.3	1061	1.2		11	872	1.5	154.622	GKS07-4M □□□090C12	124
	9.0	1105	1.1		11	908	1.3	158.364	GKS07-3M □□□090C12	108
	9.0	1108	2.7		11	911	3.3	158.816	GKS09-3M □□□090C12	108
	8.4	1167	2.6		10	959	3.1	170.188	GKS09-4M □□□090C12	124
	8.0	1229	0.9		9.7	1010	1.0	179.201	GKS07-4M □□□090C12	124
	7.9	1270	2.4		9.5	1044	2.9	182.000	GKS09-3M □□□090C12	108
	7.8	1288	1.0		9.4	1059	1.3	184.600	GKS07-3M □□□090C12	108
	7.1	1380	0.9		8.6	1134	1.2	201.254	GKS07-4M □□□090C12	124
	7.0	1403	2.2		8.5	1153	2.6	204.596	GKS09-4M □□□090C12	124
	7.0	1431	2.2		8.4	1176	2.6	205.111	GKS09-3M □□□090C12	108
	6.9	1451	0.8		8.3	1193	1.0	208.000	GKS07-3M □□□090C12	108
	6.5	1541	2.0		7.8	1267	2.4	220.882	GKS09-3M □□□090C12	108
	6.4	1563	0.9		7.7	1285	1.0	224.037	GKS07-3M □□□090C12	108
	6.2	1581	1.9		7.5	1300	2.3	230.577	GKS09-4M □□□090C12	124
	5.8	1704	1.8		7.0	1400	2.2	248.439	GKS09-4M □□□090C12	124
	5.7	1737	1.8		7.0	1427	2.2	248.930	GKS09-3M □□□090C12	108
	5.1	1948	1.6		6.2	1601	1.9	279.205	GKS09-3M □□□090C12	108
	5.1	1920	1.6		6.2	1578	1.9	279.986	GKS09-4M □□□090C12	124
	4.5	2195	1.4		5.5	1804	1.7	314.659	GKS09-3M □□□090C12	108
	4.4	2215	2.7		5.4	1820	3.3	322.931	GKS11-4M □□□090C12	124
	4.4	2218	1.4		5.4	1823	1.7	323.365	GKS09-4M □□□090C12	124
	3.9	2496	2.4		4.8	2051	2.9	363.866	GKS11-4M □□□090C12	124



Selection tables

50 Hz, 60 Hz: P_N = 1.1 kW

n_N	1430 r/min				1740 r/min			i		
f_N	50 Hz				60 Hz					
	n_2 [r/min]	M_2 [Nm]	c		n_2 [r/min]	M_2 [Nm]	c			
	3.9	2499	1.2		4.8	2054	1.5	364.427	GKS09-4M □□□090C12	124
	3.6	2715	2.2		4.4	2231	2.7	395.787	GKS11-4M □□□090C12	124
	3.6	2759	1.1		4.3	2267	1.3	402.234	GKS09-4M □□□090C12	124
	3.2	3059	2.0		3.9	2514	2.4	445.958	GKS11-4M □□□090C12	124
	3.2	3109	1.0		3.8	2555	1.2	453.311	GKS09-4M □□□090C12	124
	2.8	3513	1.7		3.4	2887	2.1	512.196	GKS11-4M □□□090C12	124
	2.8	3570	0.8		3.3	2934	1.0	520.538	GKS09-4M □□□090C12	124
	2.5	3958	1.5		3.0	3253	1.9	577.122	GKS11-4M □□□090C12	124
	2.3	4264	1.4		2.8	3504	1.7	621.619	GKS11-4M □□□090C12	124
	2.0	4804	1.3		2.5	3948	1.5	700.416	GKS11-4M □□□090C12	124
	1.8	5527	2.1		2.2	4543	2.5	805.901	GKS14-4M □□□090C12	124
	1.8	5600	1.1		2.1	4602	1.3	816.455	GKS11-4M □□□090C12	124
	1.6	6228	1.9		1.9	5118	2.3	908.058	GKS14-4M □□□090C12	124
	1.6	6310	1.0		1.9	5186	1.2	919.949	GKS11-4M □□□090C12	124
	1.5	6708	1.7		1.8	5513	2.1	978.071	GKS14-4M □□□090C12	124
	1.4	6796	0.9		1.8	5585	1.1	990.879	GKS11-4M □□□090C12	124
	1.3	7559	1.5		1.6	6212	1.9	1102.052	GKS14-4M □□□090C12	124
	1.2	8480	1.4		1.4	6969	1.6	1236.326	GKS14-4M □□□090C12	124
	1.0	9554	1.2		1.2	7852	1.5	1393.043	GKS14-4M □□□090C12	124



Selection tables

50 Hz, 60 Hz: P_N = 1.5 kW

n_N	1435 r/min				1745 r/min			i		
f_N	50 Hz				60 Hz					
	n_2 [r/min]	M_2 [Nm]	c		n_2 [r/min]	M_2 [Nm]	c			
	280	49	1.7		339	40	1.9	5.123	GKS04-3M □□□090C32	108
	209	65	2.3		253	54	2.6	6.863	GKS05-3M □□□090C32	108
	204	67	1.4		247	55	1.6	7.025	GKS04-3M □□□090C32	108
	176	77	1.7		212	64	1.9	8.167	GKS04-3M □□□090C32	108
	160	85	1.2		193	70	1.4	8.991	GKS04-3M □□□090C32	108
	153	89	1.8		184	73	2.1	9.412	GKS05-3M □□□090C32	108
	146	93	1.1		176	77	1.3	9.836	GKS04-3M □□□090C32	108
	136	100	2.3		164	82	2.6	10.569	GKS05-3M □□□090C32	108
	126	108	3.1		152	89	3.5	11.382	GKS06-3M □□□090C32	108
	123	111	2.3		149	91	2.6	11.667	GKS05-3M □□□090C32	108
	122	111	1.6		148	91	1.9	11.730	GKS04-3M □□□090C32	108
	110	124	1.3		133	102	1.5	13.067	GKS04-3M □□□090C32	108
	109	125	1.3		132	103	1.5	13.176	GKS05-3M □□□090C32	108
	100	136	1.2		121	112	1.4	14.333	GKS04-3M □□□090C32	108
	99	137	1.8		120	113	2.1	14.494	GKS05-3M □□□090C32	108
	90	152	1.8		108	125	2.1	16.000	GKS05-3M □□□090C32	108
	89	153	1.2		108	125	1.4	16.087	GKS04-3M □□□090C32	108
	84	162	1.9		102	133	2.2	17.054	GKS05-3M □□□090C32	108
	81	169	3.1		97	139	3.5	17.809	GKS06-3M □□□090C32	108
	80	170	1.0		97	140	1.1	17.920	GKS04-3M □□□090C32	108
	75	182	1.6		90	150	1.9	19.216	GKS05-3M □□□090C32	108
	70	195	0.9		84	161	1.1	20.588	GKS04-3M □□□090C32	108
	64	214	0.9		77	176	1.0	22.522	GKS04-3M □□□090C32	108
	61	222	1.5		74	182	1.7	23.388	GKS05-3M □□□090C32	108
	55	247	2.8		67	203	3.2	26.017	GKS06-3M □□□090C32	108
	55	250	1.2		66	205	1.4	26.353	GKS05-3M □□□090C32	108
	50	270	2.5		61	222	2.9	28.461	GKS06-3M □□□090C32	108
	48	284	1.2		58	233	1.3	29.931	GKS05-3M □□□090C32	108
	45	304	2.0		54	250	2.3	32.063	GKS06-3M □□□090C32	108
	44	310	1.1		53	255	1.2	32.744	GKS05-3M □□□090C32	108
	40	344	2.0		48	283	2.3	36.303	GKS06-3M □□□090C32	108
	39	350	0.9		47	288	1.0	36.894	GKS05-3M □□□090C32	108
	34	396	0.8		42	326	1.0	41.765	GKS05-3M □□□090C32	108
	32	422	1.6		39	347	2.0	44.471	GKS06-3M □□□090C32	108
	27	503	1.4		33	414	1.7	53.074	GKS06-3M □□□090C32	108
	25	545	2.4		30	448	2.9	57.501	GKS07-3M □□□090C32	108
	25	549	1.3		30	451	1.5	57.882	GKS06-3M □□□090C32	108
	22	614	1.9		27	505	2.4	64.790	GKS07-3M □□□090C32	108
	22	618	1.0		27	508	1.2	65.207	GKS06-3M □□□090C32	108
	20	668	2.0		25	549	2.4	70.474	GKS07-3M □□□090C32	108



Selection tables

50 Hz, 60 Hz: P_N = 1.5 kW

n_N	1435 r/min				1745 r/min			i		
f_N	50 Hz				60 Hz					
	n_2 [r/min]	M_2 [Nm]	c		n_2 [r/min]	M_2 [Nm]	c			
	20	683	1.0		24	561	1.3	72.000	GKS06-3M □□□090C32	108
	18	753	1.6		22	619	1.9	79.407	GKS07-3M □□□090C32	108
	18	769	0.8		21	632	1.0	81.111	GKS06-3M □□□090C32	108
	16	871	2.9		19	716	3.6	91.860	GKS09-3M □□□090C32	108
	16	878	1.5		19	722	1.8	92.563	GKS07-3M □□□090C32	108
	14	937	3.2		17	771	3.9	100.551	GKS09-4M □□□090C32	124
	14	960	1.3		17	790	1.6	103.039	GKS07-4M □□□090C32	124
	14	982	2.9		17	807	3.6	103.524	GKS09-3M □□□090C32	108
	14	989	1.2		17	813	1.5	104.296	GKS07-3M □□□090C32	108
	13	1057	2.6		16	869	3.1	111.484	GKS09-3M □□□090C32	108
	13	1065	1.2		15	876	1.5	112.338	GKS07-3M □□□090C32	108
	13	1048	1.0		15	861	1.2	112.391	GKS07-4M □□□090C32	124
	13	1056	2.8		15	869	3.5	113.320	GKS09-4M □□□090C32	124
	12	1149	2.6		14	945	3.2	123.275	GKS09-4M □□□090C32	124
	11	1191	2.6		14	980	3.1	125.641	GKS09-3M □□□090C32	108
	11	1176	1.1		14	967	1.3	126.222	GKS07-4M □□□090C32	124
	11	1200	1.0		14	987	1.2	126.578	GKS07-3M □□□090C32	108
	10	1284	0.8		13	1056	1.0	137.748	GKS07-4M □□□090C32	124
	10	1295	2.3		13	1065	2.8	138.929	GKS09-4M □□□090C32	124
	10	1333	1.0		12	1096	1.2	140.548	GKS07-3M □□□090C32	108
	10	1336	2.0		12	1099	2.4	140.921	GKS09-3M □□□090C32	108
	9.5	1407	2.1		12	1157	2.6	151.012	GKS09-4M □□□090C32	124
	9.3	1441	0.9		11	1185	1.1	154.622	GKS07-4M □□□090C32	124
	9.1	1502	0.8		11	1235	1.0	158.364	GKS07-3M □□□090C32	108
	9.0	1506	2.0		11	1238	2.4	158.816	GKS09-3M □□□090C32	108
	8.4	1586	1.9		10	1304	2.3	170.188	GKS09-4M □□□090C32	124
	7.9	1726	1.8		9.5	1419	2.1	182.000	GKS09-3M □□□090C32	108
	7.0	1907	1.6		8.5	1568	1.9	204.596	GKS09-4M □□□090C32	124
	7.0	1945	1.6		8.5	1599	1.9	205.111	GKS09-3M □□□090C32	108
	6.5	2094	1.4		7.9	1722	1.8	220.882	GKS09-3M □□□090C32	108
	6.2	2149	1.4		7.5	1767	1.7	230.577	GKS09-4M □□□090C32	124
	5.8	2315	1.3		7.0	1904	1.6	248.439	GKS09-4M □□□090C32	124
	5.8	2360	1.3		7.0	1941	1.6	248.930	GKS09-3M □□□090C32	108
	5.1	2647	1.1		6.2	2177	1.4	279.205	GKS09-3M □□□090C32	108
	5.1	2610	1.2		6.2	2146	1.4	279.986	GKS09-4M □□□090C32	124
	4.6	2983	1.0		5.5	2453	1.3	314.659	GKS09-3M □□□090C32	108
	4.4	3010	2.0		5.4	2475	2.4	322.931	GKS11-4M □□□090C32	124
	4.4	3014	1.0		5.4	2478	1.2	323.365	GKS09-4M □□□090C32	124
	3.9	3391	1.8		4.8	2789	2.2	363.866	GKS11-4M □□□090C32	124
	3.9	3397	0.9		4.8	2793	1.1	364.427	GKS09-4M □□□090C32	124



Selection tables

50 Hz, 60 Hz: P_N = 1.5 kW

n_N	1435 r/min				1745 r/min			i		
f_N	50 Hz				60 Hz					
	n_2 [r/min]	M_2 [Nm]	c		n_2 [r/min]	M_2 [Nm]	c			
	3.6	3689	1.6		4.4	3033	2.0	395.787	GKS11-4M □□□090C32	124
	3.6	3749	0.8		4.3	3083	1.0	402.234	GKS09-4M □□□090C32	124
	3.2	4156	1.5		3.9	3418	1.8	445.958	GKS11-4M □□□090C32	124
	2.8	4774	1.3		3.4	3926	1.5	512.196	GKS11-4M □□□090C32	124
	2.5	5379	1.1		3.0	4423	1.4	577.122	GKS11-4M □□□090C32	124
	2.3	5794	1.0		2.8	4764	1.3	621.619	GKS11-4M □□□090C32	124
	2.1	6528	0.9		2.5	5368	1.1	700.416	GKS11-4M □□□090C32	124
	1.8	7511	1.5		2.2	6177	1.9	805.901	GKS14-4M □□□090C32	124
	1.6	8463	1.4		1.9	6960	1.7	908.058	GKS14-4M □□□090C32	124
	1.5	9116	1.3		1.8	7496	1.5	978.071	GKS14-4M □□□090C32	124
	1.3	10271	1.1		1.6	8447	1.4	1102.052	GKS14-4M □□□090C32	124
	1.2	11523	1.0		1.4	9476	1.2	1236.326	GKS14-4M □□□090C32	124
	1.0	12983	0.9		1.3	10677	1.1	1393.043	GKS14-4M □□□090C32	124



Selection tables

50 Hz, 60 Hz: P_N = 2.2 kW

n_N	1445 r/min				1750 r/min			i		
f_N	50 Hz				60 Hz					
	n_2 [r/min]	M_2 [Nm]	c		n_2 [r/min]	M_2 [Nm]	c			
	223	90	2.9		269	74	3.4	6.485	GKS06-3M □□□100C12	108
	211	95	1.6		254	78	1.8	6.863	GKS05-3M □□□100C12	108
	157	127	2.9		190	105	3.4	9.196	GKS06-3M □□□100C12	108
	154	130	1.3		185	107	1.5	9.412	GKS05-3M □□□100C12	108
	142	140	2.9		172	116	3.4	10.147	GKS06-3M □□□100C12	108
	137	146	1.6		165	121	1.8	10.569	GKS05-3M □□□100C12	108
	127	157	2.1		153	130	2.4	11.382	GKS06-3M □□□100C12	108
	124	161	1.6		150	133	1.8	11.667	GKS05-3M □□□100C12	108
	115	174	2.4		138	144	2.8	12.612	GKS06-3M □□□100C12	108
	110	182	0.9		132	150	1.0	13.176	GKS05-3M □□□100C12	108
	100	200	1.3		120	165	1.5	14.494	GKS05-3M □□□100C12	108
	98	205	2.9		118	169	3.4	14.824	GKS06-3M □□□100C12	108
	90	221	1.3		109	182	1.5	16.000	GKS05-3M □□□100C12	108
	87	231	2.6		105	190	3.0	16.699	GKS06-3M □□□100C12	108
	85	236	1.3		102	194	1.5	17.054	GKS05-3M □□□100C12	108
	81	246	2.1		98	203	2.4	17.809	GKS06-3M □□□100C12	108
	75	265	1.1		91	219	1.3	19.216	GKS05-3M □□□100C12	108
	71	281	2.4		86	232	2.7	20.329	GKS06-3M □□□100C12	108
	63	316	1.9		76	261	2.2	22.902	GKS06-3M □□□100C12	108
	62	323	1.0		75	267	1.2	23.388	GKS05-3M □□□100C12	108
	56	359	1.9		67	297	2.2	26.017	GKS06-3M □□□100C12	108
	55	364	0.8		66	301	0.9	26.353	GKS05-3M □□□100C12	108
	51	390	3.1		62	322	3.5	28.274	GKS07-3M □□□100C12	108
	51	393	1.7		61	325	2.0	28.461	GKS06-3M □□□100C12	108
	45	440	2.7		55	363	3.1	31.858	GKS07-3M □□□100C12	108
	45	443	1.4		54	366	1.6	32.063	GKS06-3M □□□100C12	108
	40	498	2.6		48	411	3.0	36.063	GKS07-3M □□□100C12	108
	40	501	1.4		48	414	1.6	36.303	GKS06-3M □□□100C12	108
	35	573	1.2		42	473	1.4	41.472	GKS06-3M □□□100C12	108
	33	610	2.1		40	504	2.6	44.178	GKS07-3M □□□100C12	108
	33	614	1.1		39	507	1.4	44.471	GKS06-3M □□□100C12	108
	29	695	1.9		35	574	2.3	50.345	GKS07-3M □□□100C12	108
	27	733	0.9		33	605	1.1	53.074	GKS06-3M □□□100C12	108
	25	794	1.6		30	656	2.0	57.501	GKS07-3M □□□100C12	108
	25	799	0.9		30	660	1.1	57.882	GKS06-3M □□□100C12	108
	22	895	1.3		27	739	1.6	64.790	GKS07-3M □□□100C12	108
	21	973	1.4		25	804	1.6	70.474	GKS07-3M □□□100C12	108
	20	980	3.1		25	809	3.7	70.982	GKS09-3M □□□100C12	108
	18	1097	1.1		22	905	1.3	79.407	GKS07-3M □□□100C12	108
	18	1105	2.8		22	912	3.4	79.996	GKS09-3M □□□100C12	108



Selection tables

50 Hz, 60 Hz: P_N = 2.2 kW

n_N	1445 r/min				1750 r/min			i		
f_N	50 Hz				60 Hz					
	n_2 [r/min]	M_2 [Nm]	c		n_2 [r/min]	M_2 [Nm]	c			
	16	1269	2.4		19	1047	2.9	91.860	GKS09-3M □□□100C12	108
	16	1278	1.0		19	1055	1.3	92.563	GKS07-3M □□□100C12	108
	14	1365	2.2		17	1127	2.7	100.551	GKS09-4M □□□100C12	124
	14	1399	0.9		17	1155	1.1	103.039	GKS07-4M □□□100C12	124
	14	1430	2.2		17	1180	2.6	103.524	GKS09-3M □□□100C12	108
	14	1440	0.8		17	1189	1.0	104.296	GKS07-3M □□□100C12	108
	13	1538	2.9		16	1270	3.5	111.335	GKS11-3M □□□100C12	108
	13	1540	2.0		16	1271	2.4	111.484	GKS09-3M □□□100C12	108
	13	1551	0.9		16	1281	1.0	112.338	GKS07-3M □□□100C12	108
	13	1538	2.0		15	1270	2.4	113.320	GKS09-4M □□□100C12	124
	12	1673	1.8		14	1382	2.2	123.275	GKS09-4M □□□100C12	124
	12	1732	2.9		14	1430	3.5	125.448	GKS11-3M □□□100C12	108
	12	1735	1.8		14	1433	2.1	125.641	GKS09-3M □□□100C12	108
	10	1886	1.6		13	1557	1.9	138.929	GKS09-4M □□□100C12	124
	10	1943	2.3		12	1605	2.8	140.732	GKS11-3M □□□100C12	108
	10	1946	1.5		12	1607	1.9	140.921	GKS09-3M □□□100C12	108
	10	1913	3.1		12	1580	3.7	140.952	GKS11-4M □□□100C12	124
	9.6	2050	1.5		12	1693	1.8	151.012	GKS09-4M □□□100C12	124
	9.4	2080	2.8		11	1718	3.4	153.242	GKS11-4M □□□100C12	124
	9.1	2190	2.3		11	1808	2.8	158.571	GKS11-3M □□□100C12	108
	9.1	2193	1.4		11	1811	1.7	158.816	GKS09-3M □□□100C12	108
	8.5	2310	1.3		10	1908	1.6	170.188	GKS09-4M □□□100C12	124
	8.4	2344	2.5		10	1935	3.1	172.667	GKS11-4M □□□100C12	124
	7.9	2513	1.2		9.6	2075	1.5	182.000	GKS09-3M □□□100C12	108
	7.7	2577	2.3		9.4	2127	2.8	186.572	GKS11-3M □□□100C12	108
	7.2	2741	2.2		8.6	2263	2.6	201.890	GKS11-4M □□□100C12	124
	7.1	2777	1.1		8.5	2293	1.3	204.596	GKS09-4M □□□100C12	124
	7.0	2833	1.1		8.5	2339	1.3	205.111	GKS09-3M □□□100C12	108
	6.9	2903	2.0		8.3	2397	2.5	210.222	GKS11-3M □□□100C12	108
	6.5	3050	1.0		7.9	2519	1.2	220.882	GKS09-3M □□□100C12	108
	6.4	3127	1.9		7.7	2582	2.3	226.431	GKS11-3M □□□100C12	108
	6.4	3088	1.9		7.7	2550	2.3	227.481	GKS11-4M □□□100C12	124
	6.3	3130	1.0		7.6	2585	1.2	230.577	GKS09-4M □□□100C12	124
	5.8	3368	1.8		7.0	2781	2.1	248.106	GKS11-4M □□□100C12	124
	5.8	3373	0.9		7.0	2785	1.1	248.439	GKS09-4M □□□100C12	124
	5.8	3438	0.9		7.0	2839	1.1	248.930	GKS09-3M □□□100C12	108
	5.7	3523	1.7		6.8	2909	2.0	255.133	GKS11-3M □□□100C12	108
	5.2	3795	1.6		6.2	3134	1.9	279.556	GKS11-4M □□□100C12	124
	5.2	3801	0.8		6.2	3138	1.0	279.986	GKS09-4M □□□100C12	124
	5.1	3953	1.5		6.1	3264	1.8	286.219	GKS11-3M □□□100C12	108



Selection tables

50 Hz, 60 Hz: P_N = 2.2 kW

n_N	1445 r/min				1750 r/min			i		
f_N	50 Hz				60 Hz					
	n_2 [r/min]	M_2 [Nm]	c		n_2 [r/min]	M_2 [Nm]	c			
	4.5	4367	2.6		5.4	3606	3.2	321.729	GKS14-4M □□□100C12	124
	4.5	4454	1.3		5.4	3677	1.6	322.500	GKS11-3M □□□100C12	108
	4.5	4384	1.4		5.4	3620	1.7	322.931	GKS11-4M □□□100C12	124
	4.0	4921	2.3		4.8	4063	2.8	362.512	GKS14-4M □□□100C12	124
	4.0	4939	1.2		4.8	4079	1.5	363.866	GKS11-4M □□□100C12	124
	3.7	5303	2.2		4.5	4379	2.6	390.671	GKS14-4M □□□100C12	124
	3.7	5373	1.1		4.4	4436	1.3	395.787	GKS11-4M □□□100C12	124
	3.3	5976	1.9		4.0	4934	2.3	440.193	GKS14-4M □□□100C12	124
	3.2	6054	1.0		3.9	4999	1.2	445.958	GKS11-4M □□□100C12	124
	2.8	6953	0.9		3.4	5741	1.0	512.196	GKS11-4M □□□100C12	124
	2.8	6966	1.6		3.4	5752	2.0	513.121	GKS14-4M □□□100C12	124
	2.5	7849	1.5		3.0	6481	1.8	578.164	GKS14-4M □□□100C12	124
	2.3	8454	1.4		2.8	6980	1.6	622.742	GKS14-4M □□□100C12	124
	2.1	9525	1.2		2.5	7865	1.5	701.681	GKS14-4M □□□100C12	124
	1.8	10940	1.1		2.2	9033	1.3	805.901	GKS14-4M □□□100C12	124
	1.6	12327	0.9		1.9	10178	1.1	908.058	GKS14-4M □□□100C12	124
	1.5	13277	0.9		1.8	10963	1.0	978.071	GKS14-4M □□□100C12	124



Selection tables

50 Hz, 60 Hz: P_N = 3.0 kW

n_N	1445 r/min				1755 r/min			i		
f_N	50 Hz				60 Hz					
	n_2 [r/min]	M_2 [Nm]	c		n_2 [r/min]	M_2 [Nm]	c			
	223	122	2.2		269	101	2.5	6.485	GKS06-3M □□□100C32	108
	211	129	1.1		254	106	1.3	6.863	GKS05-3M □□□100C32	108
	157	173	2.2		190	143	2.5	9.196	GKS06-3M □□□100C32	108
	154	177	0.9		185	146	1.1	9.412	GKS05-3M □□□100C32	108
	142	191	2.2		172	157	2.5	10.147	GKS06-3M □□□100C32	108
	137	199	1.1		165	164	1.3	10.569	GKS05-3M □□□100C32	108
	127	214	2.9		153	176	3.3	11.378	GKS07-3M □□□100C32	108
	127	214	1.5		153	176	1.8	11.382	GKS06-3M □□□100C32	108
	124	220	1.1		150	181	1.3	11.667	GKS05-3M □□□100C32	108
	115	237	1.8		138	196	2.1	12.612	GKS06-3M □□□100C32	108
	100	273	0.9		120	225	1.1	14.494	GKS05-3M □□□100C32	108
	98	279	2.2		118	230	2.5	14.824	GKS06-3M □□□100C32	108
	90	301	0.9		109	248	1.1	16.000	GKS05-3M □□□100C32	108
	87	314	1.9		105	259	2.2	16.699	GKS06-3M □□□100C32	108
	85	321	1.0		102	264	1.1	17.054	GKS05-3M □□□100C32	108
	84	325	3.1		101	268	3.5	17.270	GKS07-3M □□□100C32	108
	81	335	1.5		98	276	1.8	17.809	GKS06-3M □□□100C32	108
	75	362	0.8		91	298	0.9	19.216	GKS05-3M □□□100C32	108
	71	383	1.7		86	315	2.0	20.329	GKS06-3M □□□100C32	108
	63	431	1.4		76	355	1.6	22.902	GKS06-3M □□□100C32	108
	57	475	2.5		69	391	2.9	25.244	GKS07-3M □□□100C32	108
	56	490	1.4		67	403	1.6	26.017	GKS06-3M □□□100C32	108
	51	532	2.3		62	438	2.6	28.274	GKS07-3M □□□100C32	108
	51	536	1.3		61	441	1.5	28.461	GKS06-3M □□□100C32	108
	45	600	2.0		55	494	2.3	31.858	GKS07-3M □□□100C32	108
	45	604	1.0		54	497	1.2	32.063	GKS06-3M □□□100C32	108
	40	679	1.9		48	559	2.2	36.063	GKS07-3M □□□100C32	108
	40	684	1.0		48	563	1.2	36.303	GKS06-3M □□□100C32	108
	35	781	0.9		42	643	1.0	41.472	GKS06-3M □□□100C32	108
	33	832	1.6		40	685	1.9	44.178	GKS07-3M □□□100C32	108
	33	837	0.8		39	690	1.0	44.471	GKS06-3M □□□100C32	108
	29	948	1.4		35	781	1.7	50.345	GKS07-3M □□□100C32	108
	25	1083	1.2		30	892	1.5	57.501	GKS07-3M □□□100C32	108
	25	1101	2.8		30	906	3.3	58.456	GKS09-3M □□□100C32	108
	22	1220	1.0		27	1005	1.2	64.790	GKS07-3M □□□100C32	108
	22	1241	2.5		27	1021	3.0	65.879	GKS09-3M □□□100C32	108
	21	1327	1.0		25	1093	1.2	70.474	GKS07-3M □□□100C32	108
	20	1337	2.3		25	1101	2.8	70.982	GKS09-3M □□□100C32	108
	18	1495	0.8		22	1231	1.0	79.407	GKS07-3M □□□100C32	108
	18	1506	2.0		22	1240	2.5	79.996	GKS09-3M □□□100C32	108



Selection tables

50 Hz, 60 Hz: P_N = 3.0 kW

n_N	1445 r/min				1755 r/min			i		
f_N	50 Hz				60 Hz					
	n_2 [r/min]	M_2 [Nm]	c		n_2 [r/min]	M_2 [Nm]	c			
	16	1728	2.5		19	1422	3.1	91.737	GKS11-3M □□□100C32	108
	16	1730	1.8		19	1424	2.1	91.860	GKS09-3M □□□100C32	108
	14	1861	1.6		17	1533	2.0	100.551	GKS09-4M □□□100C32	124
	14	1890	3.0		17	1556	3.6	102.119	GKS11-4M □□□100C32	124
	14	1947	2.5		17	1603	3.1	103.365	GKS11-3M □□□100C32	108
	14	1950	1.6		17	1605	1.9	103.524	GKS09-3M □□□100C32	108
	13	2097	2.1		16	1726	2.6	111.335	GKS11-3M □□□100C32	108
	13	2099	1.4		16	1729	1.8	111.484	GKS09-3M □□□100C32	108
	13	2098	1.4		15	1727	1.7	113.320	GKS09-4M □□□100C32	124
	13	2130	2.8		15	1754	3.3	115.063	GKS11-4M □□□100C32	124
	12	2282	1.3		14	1879	1.6	123.275	GKS09-4M □□□100C32	124
	12	2316	2.5		14	1907	3.0	125.095	GKS11-4M □□□100C32	124
	12	2362	2.1		14	1945	2.6	125.448	GKS11-3M □□□100C32	108
	12	2366	1.3		14	1948	1.6	125.641	GKS09-3M □□□100C32	108
	10	2572	1.2		13	2117	1.4	138.929	GKS09-4M □□□100C32	124
	10	2650	1.7		12	2182	2.1	140.732	GKS11-3M □□□100C32	108
	10	2654	1.1		12	2185	1.4	140.921	GKS09-3M □□□100C32	108
	10	2609	2.3		12	2148	2.8	140.952	GKS11-4M □□□100C32	124
	9.6	2795	1.1		12	2302	1.3	151.012	GKS09-4M □□□100C32	124
	9.4	2837	2.0		11	2336	2.5	153.242	GKS11-4M □□□100C32	124
	9.1	2986	1.7		11	2459	2.1	158.571	GKS11-3M □□□100C32	108
	9.1	2991	1.0		11	2462	1.3	158.816	GKS09-3M □□□100C32	108
	8.5	3150	1.0		10	2594	1.2	170.188	GKS09-4M □□□100C32	124
	8.4	3196	1.9		10	2632	2.3	172.667	GKS11-4M □□□100C32	124
	7.9	3427	0.9		9.6	2822	1.1	182.000	GKS09-3M □□□100C32	108
	7.7	3513	1.7		9.4	2893	2.1	186.572	GKS11-3M □□□100C32	108
	7.2	3737	1.6		8.6	3077	1.9	201.890	GKS11-4M □□□100C32	124
	7.1	3787	0.8		8.5	3118	1.0	204.596	GKS09-4M □□□100C32	124
	6.9	3959	1.5		8.3	3260	1.8	210.222	GKS11-3M □□□100C32	108
	6.4	4264	1.4		7.7	3511	1.7	226.431	GKS11-3M □□□100C32	108
	6.4	4211	1.4		7.7	3467	1.7	227.481	GKS11-4M □□□100C32	124
	5.8	4593	1.3		7.0	3782	1.6	248.106	GKS11-4M □□□100C32	124
	5.7	4805	1.2		6.8	3956	1.5	255.133	GKS11-3M □□□100C32	108
	5.2	5175	1.2		6.2	4261	1.4	279.556	GKS11-4M □□□100C32	124
	5.1	5390	1.1		6.1	4438	1.3	286.219	GKS11-3M □□□100C32	108
	4.5	5956	1.9		5.4	4904	2.3	321.729	GKS14-4M □□□100C32	124
	4.5	6073	1.0		5.4	5000	1.2	322.500	GKS11-3M □□□100C32	108
	4.5	5978	1.0		5.4	4922	1.2	322.931	GKS11-4M □□□100C32	124
	4.0	6711	1.7		4.8	5525	2.1	362.512	GKS14-4M □□□100C32	124
	4.0	6736	0.9		4.8	5546	1.1	363.866	GKS11-4M □□□100C32	124



Selection tables

50 Hz, 60 Hz: P_N = 3.0 kW

n_N	1445 r/min				1755 r/min			i		
f_N	50 Hz				60 Hz					
	n_2 [r/min]	M_2 [Nm]	c		n_2 [r/min]	M_2 [Nm]	c			
	3.7	7232	1.6		4.5	5954	1.9	390.671	GKS14-4M □□□100C32	124
	3.7	7327	0.8		4.4	6032	1.0	395.787	GKS11-4M □□□100C32	124
	3.3	8149	1.4		4.0	6709	1.7	440.193	GKS14-4M □□□100C32	124
	2.8	9499	1.2		3.4	7821	1.5	513.121	GKS14-4M □□□100C32	124
	2.5	10703	1.1		3.0	8812	1.3	578.164	GKS14-4M □□□100C32	124
	2.3	11528	1.0		2.8	9492	1.2	622.742	GKS14-4M □□□100C32	124
	2.1	12989	0.9		2.5	10695	1.1	701.681	GKS14-4M □□□100C32	124



Selection tables

50 Hz, 60 Hz: P_N = 4.0 kW

n_N	1455 r/min				1760 r/min			i		
f_N	50 Hz				60 Hz					
	n_2 [r/min]	M_2 [Nm]	c		n_2 [r/min]	M_2 [Nm]	c			
	244	148	3.2		295	123	3.6	5.955	GKS07-3M □□□112C22	108
	224	162	1.6		271	134	1.9	6.485	GKS06-3M □□□112C22	108
	176	206	2.6		213	170	3.0	8.254	GKS07-3M □□□112C22	108
	159	229	3.2		191	189	3.6	9.171	GKS07-3M □□□112C22	108
	158	229	1.6		191	190	1.9	9.196	GKS06-3M □□□112C22	108
	144	252	3.2		173	209	3.6	10.124	GKS07-3M □□□112C22	108
	143	253	1.6		173	209	1.9	10.147	GKS06-3M □□□112C22	108
	128	284	2.2		154	235	2.5	11.378	GKS07-3M □□□112C22	108
	128	284	1.2		154	235	1.3	11.382	GKS06-3M □□□112C22	108
	115	314	1.4		139	260	1.6	12.612	GKS06-3M □□□112C22	108
	115	317	2.6		138	262	3.0	12.711	GKS07-3M □□□112C22	108
	98	369	2.8		119	305	3.2	14.798	GKS07-3M □□□112C22	108
	98	370	1.6		118	306	1.9	14.824	GKS06-3M □□□112C22	108
	87	416	2.6		105	344	3.0	16.674	GKS07-3M □□□112C22	108
	87	416	1.5		105	344	1.7	16.699	GKS06-3M □□□112C22	108
	84	431	2.3		102	356	2.7	17.270	GKS07-3M □□□112C22	108
	82	444	1.2		99	367	1.3	17.809	GKS06-3M □□□112C22	108
	72	507	1.3		86	419	1.5	20.329	GKS06-3M □□□112C22	108
	71	511	2.2		86	423	2.5	20.511	GKS07-3M □□□112C22	108
	64	571	1.1		77	472	1.2	22.902	GKS06-3M □□□112C22	108
	63	576	2.0		76	476	2.3	23.111	GKS07-3M □□□112C22	108
	58	629	1.9		70	520	2.1	25.244	GKS07-3M □□□112C22	108
	56	649	1.0		68	536	1.2	26.017	GKS06-3M □□□112C22	108
	52	705	1.7		62	583	2.0	28.274	GKS07-3M □□□112C22	108
	51	710	1.0		62	587	1.1	28.461	GKS06-3M □□□112C22	108
	46	794	1.5		55	657	1.7	31.858	GKS07-3M □□□112C22	108
	40	899	1.4		49	743	1.6	36.063	GKS07-3M □□□112C22	108
	37	989	3.0		44	818	3.5	39.662	GKS09-3M □□□112C22	108
	36	1020	1.3		43	843	1.5	40.906	GKS07-3M □□□112C22	108
	34	1076	2.8		41	889	3.4	43.146	GKS09-3M □□□112C22	108
	33	1102	1.2		40	911	1.4	44.178	GKS07-3M □□□112C22	108
	30	1213	2.5		36	1002	3.0	48.625	GKS09-3M □□□112C22	108
	29	1255	1.0		35	1038	1.3	50.345	GKS07-3M □□□112C22	108
	25	1434	0.9		31	1185	1.1	57.501	GKS07-3M □□□112C22	108
	25	1458	2.1		30	1205	2.5	58.456	GKS09-3M □□□112C22	108
	22	1643	1.9		27	1358	2.2	65.879	GKS09-3M □□□112C22	108
	21	1768	2.7		25	1461	3.3	70.887	GKS11-3M □□□112C22	108
	21	1770	1.7		25	1463	2.1	70.982	GKS09-3M □□□112C22	108
	18	1992	2.7		22	1647	3.3	79.873	GKS11-3M □□□112C22	108
	18	1995	1.5		22	1649	1.9	79.996	GKS09-3M □□□112C22	108



Selection tables

50 Hz, 60 Hz: P_N = 4.0 kW

n_N	1455 r/min				1760 r/min			i		
f_N	50 Hz				60 Hz					
	n_2 [r/min]	M_2 [Nm]	c		n_2 [r/min]	M_2 [Nm]	c			
	16	2258	2.7		19	1867	3.3	90.551	GKS14-3M □□□112C22	108
	16	2288	2.2		19	1891	2.6	91.737	GKS11-3M □□□112C22	108
	16	2291	1.3		19	1894	1.6	91.860	GKS09-3M □□□112C22	108
	15	2465	1.2		18	2038	1.5	100.551	GKS09-4M □□□112C22	124
	14	2544	2.7		17	2103	3.3	102.029	GKS14-3M □□□112C22	108
	14	2503	2.3		17	2069	2.7	102.119	GKS11-4M □□□112C22	124
	14	2578	2.2		17	2131	2.6	103.365	GKS11-3M □□□112C22	108
	14	2581	1.2		17	2134	1.4	103.524	GKS09-3M □□□112C22	108
	13	2740	2.3		16	2265	2.7	109.896	GKS14-3M □□□112C22	108
	13	2776	1.8		16	2295	2.2	111.335	GKS11-3M □□□112C22	108
	13	2780	1.1		16	2298	1.3	111.484	GKS09-3M □□□112C22	108
	13	2778	1.1		16	2296	1.3	113.320	GKS09-4M □□□112C22	124
	13	2820	2.1		15	2332	2.5	115.063	GKS11-4M □□□112C22	124
	12	3022	1.0		14	2498	1.2	123.275	GKS09-4M □□□112C22	124
	12	3088	2.3		14	2553	2.7	123.826	GKS14-3M □□□112C22	108
	12	3066	1.9		14	2535	2.3	125.095	GKS11-4M □□□112C22	124
	12	3128	1.8		14	2586	2.2	125.448	GKS11-3M □□□112C22	108
	12	3133	1.0		14	2590	1.2	125.641	GKS09-3M □□□112C22	108
	11	3464	1.8		13	2864	2.2	138.913	GKS14-3M □□□112C22	108
	11	3405	0.9		13	2815	1.1	138.929	GKS09-4M □□□112C22	124
	10	3509	1.5		13	2901	1.8	140.732	GKS11-3M □□□112C22	108
	10	3455	1.7		13	2856	2.1	140.952	GKS11-4M □□□112C22	124
	9.6	3702	0.8		12	3060	1.0	151.012	GKS09-4M □□□112C22	124
	9.5	3756	1.5		12	3105	1.9	153.242	GKS11-4M □□□112C22	124
	9.3	3903	1.8		11	3227	2.2	156.522	GKS14-3M □□□112C22	108
	9.2	3874	3.0		11	3203	3.6	158.039	GKS14-4M □□□112C22	124
	9.2	3954	1.5		11	3269	1.8	158.571	GKS11-3M □□□112C22	108
	8.4	4232	1.4		10	3499	1.7	172.667	GKS11-4M □□□112C22	124
	8.2	4365	2.6		9.9	3609	3.2	178.072	GKS14-4M □□□112C22	124
	7.8	4652	1.3		9.4	3846	1.6	186.572	GKS11-3M □□□112C22	108
	7.8	4652	2.5		9.4	3846	3.0	186.572	GKS14-3M □□□112C22	108
	7.5	4749	2.4		9.1	3926	2.9	193.754	GKS14-4M □□□112C22	124
	7.2	4949	1.2		8.7	4091	1.5	201.890	GKS11-4M □□□112C22	124
	6.9	5242	1.1		8.4	4334	1.4	210.222	GKS11-3M □□□112C22	108
	6.9	5242	2.2		8.4	4334	2.7	210.222	GKS14-3M □□□112C22	108
	6.7	5351	2.1		8.0	4424	2.6	218.315	GKS14-4M □□□112C22	124
	6.4	5646	1.1		7.8	4668	1.3	226.431	GKS11-3M □□□112C22	108
	6.4	5646	2.1		7.8	4668	2.5	226.431	GKS14-3M □□□112C22	108
	6.4	5576	1.1		7.7	4610	1.3	227.481	GKS11-4M □□□112C22	124
	6.1	5821	2.0		7.4	4812	2.4	237.467	GKS14-4M □□□112C22	124



Selection tables

50 Hz, 60 Hz: P_N = 4.0 kW

n_N	1455 r/min				1760 r/min			i		
f_N	50 Hz				60 Hz					
	n_2 [r/min]	M_2 [Nm]	c		n_2 [r/min]	M_2 [Nm]	c			
	5.9	6082	1.0		7.1	5028	1.2	248.106	GKS11-4M □□□112C22	124
	5.7	6362	0.9		6.9	5260	1.1	255.133	GKS11-3M □□□112C22	108
	5.7	6362	1.8		6.9	5260	2.2	255.133	GKS14-3M □□□112C22	108
	5.4	6559	1.8		6.6	5422	2.1	267.568	GKS14-4M □□□112C22	124
	5.2	6853	0.9		6.3	5665	1.1	279.556	GKS11-4M □□□112C22	124
	5.1	7137	0.8		6.1	5900	1.0	286.219	GKS11-3M □□□112C22	108
	5.1	7137	1.6		6.1	5900	2.0	286.219	GKS14-3M □□□112C22	108
	4.5	7886	1.5		5.5	6520	1.8	321.729	GKS14-4M □□□112C22	124
	4.5	8042	1.4		5.4	6648	1.7	322.500	GKS14-3M □□□112C22	108
	4.0	8886	1.3		4.8	7346	1.6	362.512	GKS14-4M □□□112C22	124
	3.7	9576	1.2		4.5	7917	1.4	390.671	GKS14-4M □□□112C22	124
	3.3	10790	1.1		4.0	8920	1.3	440.193	GKS14-4M □□□112C22	124
	2.8	12578	0.9		3.4	10398	1.1	513.121	GKS14-4M □□□112C22	124
	2.5	14172	0.8		3.0	11716	1.0	578.164	GKS14-4M □□□112C22	124



Selection tables

50 Hz, 60 Hz: P_N = 5.5 kW

n_N	1470 r/min				1775 r/min			i		
f_N	50 Hz				60 Hz					
	n_2 [r/min]	M_2 [Nm]	c		n_2 [r/min]	M_2 [Nm]	c			
	247	202	2.3		297	167	2.7	5.955	GKS07-3M □□□132C12	108
	227	220	1.2		273	182	1.4	6.485	GKS06-3M□□□132C12	108
	178	280	1.9		214	232	2.2	8.254	GKS07-3M □□□132C12	108
	160	311	2.3		193	258	2.7	9.171	GKS07-3M □□□132C12	108
	160	312	1.2		193	258	1.4	9.196	GKS06-3M□□□132C12	108
	145	344	2.3		175	285	2.7	10.124	GKS07-3M □□□132C12	108
	145	344	1.2		174	285	1.4	10.147	GKS06-3M□□□132C12	108
	129	386	1.6		156	320	1.8	11.378	GKS07-3M □□□132C12	108
	129	386	0.9		156	320	1.0	11.382	GKS06-3M□□□132C12	108
	117	428	1.0		140	354	1.1	12.612	GKS06-3M□□□132C12	108
	116	431	1.9		139	357	2.2	12.711	GKS07-3M □□□132C12	108
	99	502	2.1		120	416	2.4	14.798	GKS07-3M □□□132C12	108
	99	503	1.2		119	417	1.4	14.824	GKS06-3M□□□132C12	108
	88	566	1.9		106	469	2.2	16.674	GKS07-3M □□□132C12	108
	88	567	1.1		106	469	1.2	16.699	GKS06-3M□□□132C12	108
	85	586	1.7		103	485	1.9	17.270	GKS07-3M □□□132C12	108
	83	604	0.9		99	501	1.0	17.809	GKS06-3M□□□132C12	108
	72	690	1.0		87	571	1.1	20.329	GKS06-3M□□□132C12	108
	72	696	1.6		86	576	1.8	20.511	GKS07-3M □□□132C12	108
	64	784	1.5		77	650	1.7	23.111	GKS07-3M □□□132C12	108
	58	857	1.4		70	710	1.6	25.244	GKS07-3M □□□132C12	108
	52	960	1.3		63	795	1.4	28.274	GKS07-3M □□□132C12	108
	50	992	2.9		61	821	3.4	29.228	GKS09-3M □□□132C12	108
	46	1081	1.1		56	895	1.2	31.858	GKS07-3M □□□132C12	108
	45	1118	2.7		54	926	3.0	32.940	GKS09-3M □□□132C12	108
	42	1194	2.5		50	989	2.9	35.193	GKS09-3M □□□132C12	108
	41	1224	1.1		49	1014	1.2	36.063	GKS07-3M □□□132C12	108
	37	1346	2.2		45	1115	2.5	39.662	GKS09-3M □□□132C12	108
	36	1388	0.9		43	1150	1.1	40.906	GKS07-3M □□□132C12	108
	34	1464	2.1		41	1213	2.5	43.146	GKS09-3M □□□132C12	108
	33	1499	0.9		40	1242	1.0	44.178	GKS07-3M □□□132C12	108
	30	1650	1.8		36	1367	2.2	48.625	GKS09-3M □□□132C12	108
	26	1958	3.1		31	1621	3.7	57.683	GKS11-3M □□□132C12	108
	25	1984	1.5		30	1643	1.8	58.456	GKS09-3M □□□132C12	108
	23	2206	2.7		27	1827	3.3	64.995	GKS11-3M □□□132C12	108
	22	2236	1.4		27	1852	1.6	65.879	GKS09-3M □□□132C12	108
	21	2406	2.5		25	1992	3.0	70.887	GKS11-3M □□□132C12	108
	21	2409	1.3		25	1995	1.5	70.982	GKS09-3M □□□132C12	108
	18	2711	2.2		22	2245	2.7	79.873	GKS11-3M □□□132C12	108
	18	2715	1.1		22	2248	1.4	79.996	GKS09-3M □□□132C12	108



Selection tables

50 Hz, 60 Hz: P_N = 5.5 kW

n_N	1470 r/min				1775 r/min			i		
f_N	50 Hz				60 Hz					
	n_2 [r/min]	M_2 [Nm]	c		n_2 [r/min]	M_2 [Nm]	c			
	16	3113	1.9		19	2578	2.3	91.737	GKS11-3M □□□132C12	108
	15	3252	3.1		18	2693	3.7	97.467	GKS14-4M □□□132C12	124
	14	3407	1.7		17	2821	2.0	102.119	GKS11-4M □□□132C12	124
	14	3508	1.7		17	2905	2.1	103.365	GKS11-3M □□□132C12	108
	13	3664	3.0		16	3034	3.6	109.822	GKS14-4M □□□132C12	124
	13	3730	3.2		16	3089	3.8	109.896	GKS14-3M □□□132C12	108
	13	3778	1.6		16	3129	1.9	111.335	GKS11-3M □□□132C12	108
	13	3839	1.5		15	3179	1.8	115.063	GKS11-4M □□□132C12	124
	12	3986	2.7		15	3301	3.3	119.493	GKS14-4M □□□132C12	124
	12	4202	2.8		14	3480	3.3	123.826	GKS14-3M □□□132C12	108
	12	4173	1.4		14	3456	1.7	125.095	GKS11-4M □□□132C12	124
	12	4257	1.4		14	3526	1.7	125.448	GKS11-3M □□□132C12	108
	11	4492	2.5		13	3720	3.0	134.640	GKS14-4M □□□132C12	124
	11	4714	2.5		13	3904	3.0	138.913	GKS14-3M □□□132C12	108
	10	4702	1.3		13	3894	1.5	140.952	GKS11-4M □□□132C12	124
	9.6	5112	1.1		12	4234	1.4	153.242	GKS11-4M □□□132C12	124
	9.4	5312	2.2		11	4399	2.6	156.522	GKS14-3M □□□132C12	108
	9.3	5272	2.2		11	4366	2.6	158.039	GKS14-4M □□□132C12	124
	8.5	5760	1.0		10	4770	1.2	172.667	GKS11-4M □□□132C12	124
	8.3	5941	1.9		9.9	4920	2.3	178.072	GKS14-4M □□□132C12	124
	7.9	6332	0.9		9.5	5244	1.1	186.572	GKS11-3M □□□132C12	108
	7.9	6332	1.8		9.5	5244	2.2	186.572	GKS14-3M □□□132C12	108
	7.6	6464	1.8		9.1	5353	2.2	193.754	GKS14-4M □□□132C12	124
	7.3	6735	0.9		8.8	5578	1.1	201.890	GKS11-4M □□□132C12	124
	7.0	7134	0.8		8.4	5908	1.0	210.222	GKS11-3M □□□132C12	108
	7.0	7134	1.6		8.4	5908	2.0	210.222	GKS14-3M □□□132C12	108
	6.7	7283	1.6		8.1	6032	1.9	218.315	GKS14-4M □□□132C12	124
	6.5	7684	1.5		7.8	6364	1.8	226.431	GKS14-3M □□□132C12	108
	6.2	7922	1.4		7.5	6561	1.7	237.467	GKS14-4M □□□132C12	124
	5.8	8659	1.3		6.9	7171	1.6	255.133	GKS14-3M □□□132C12	108
	5.5	8926	1.3		6.6	7392	1.6	267.568	GKS14-4M □□□132C12	124
	5.1	9713	1.2		6.2	8044	1.4	286.219	GKS14-3M □□□132C12	108
	4.6	10733	1.1		5.5	8889	1.3	321.729	GKS14-4M □□□132C12	124
	4.6	10945	1.1		5.5	9064	1.3	322.500	GKS14-3M □□□132C12	108
	4.1	12094	1.0		4.9	10015	1.2	362.512	GKS14-4M □□□132C12	124
	3.8	13033	0.9		4.5	10793	1.1	390.671	GKS14-4M □□□132C12	124



Selection tables

50 Hz, 60 Hz: P_N = 7.5 kW

n_N	1460 r/min				1765 r/min			i		
f_N	50 Hz				60 Hz					
	n_2 [r/min]	M_2 [Nm]	c		n_2 [r/min]	M_2 [Nm]	c			
	245	277	1.7		296	230	1.9	5.955	GKS07-3M □□□132C22	108
	225	302	0.9		271	250	1.0	6.485	GKS06-3M□□□132C22	108
	177	385	1.4		213	318	1.6	8.254	GKS07-3M □□□132C22	108
	159	427	1.7		192	353	1.9	9.171	GKS07-3M □□□132C22	108
	159	428	0.9		191	354	1.0	9.196	GKS06-3M□□□132C22	108
	144	472	1.7		174	390	1.9	10.124	GKS07-3M □□□132C22	108
	144	473	0.9		173	391	1.0	10.147	GKS06-3M□□□132C22	108
	128	530	1.2		155	439	1.3	11.378	GKS07-3M □□□132C22	108
	119	572	2.8		143	473	3.2	12.283	GKS09-3M □□□132C22	108
	115	592	1.4		139	490	1.6	12.711	GKS07-3M □□□132C22	108
	109	622	2.8		132	515	3.2	13.360	GKS09-3M □□□132C22	108
	99	690	1.5		119	570	1.7	14.798	GKS07-3M □□□132C22	108
	99	691	0.9		119	571	1.0	14.824	GKS06-3M□□□132C22	108
	91	751	2.4		109	621	2.7	16.122	GKS09-3M □□□132C22	108
	88	777	1.4		106	643	1.6	16.674	GKS07-3M □□□132C22	108
	85	805	1.2		102	666	1.4	17.270	GKS07-3M □□□132C22	108
	83	817	2.4		100	676	2.7	17.536	GKS09-3M □□□132C22	108
	75	911	2.8		90	753	3.2	19.541	GKS09-3M □□□132C22	108
	71	956	1.2		86	791	1.3	20.511	GKS07-3M □□□132C22	108
	66	1026	2.6		80	849	3.0	22.022	GKS09-3M □□□132C22	108
	63	1077	1.1		76	891	1.2	23.111	GKS07-3M □□□132C22	108
	58	1176	1.0		70	973	1.1	25.244	GKS07-3M □□□132C22	108
	57	1195	2.4		69	989	2.7	25.649	GKS09-3M □□□132C22	108
	52	1317	0.9		62	1090	1.0	28.274	GKS07-3M □□□132C22	108
	50	1362	2.1		60	1127	2.5	29.228	GKS09-3M □□□132C22	108
	44	1535	1.9		53	1270	2.2	32.940	GKS09-3M □□□132C22	108
	42	1640	1.8		50	1356	2.1	35.193	GKS09-3M □□□132C22	108
	37	1848	1.6		44	1529	1.9	39.662	GKS09-3M □□□132C22	108
	36	1876	3.1		44	1552	3.6	40.272	GKS11-3M □□□132C22	108
	34	2010	1.5		41	1663	1.8	43.146	GKS09-3M □□□132C22	108
	33	2040	2.8		40	1688	3.4	43.783	GKS11-3M □□□132C22	108
	30	2266	1.3		36	1874	1.6	48.625	GKS09-3M □□□132C22	108
	30	2299	2.6		36	1901	3.1	49.333	GKS11-3M □□□132C22	108
	25	2688	2.2		31	2223	2.7	57.683	GKS11-3M □□□132C22	108
	25	2724	1.1		30	2253	1.3	58.456	GKS09-3M □□□132C22	108
	23	3028	2.0		27	2505	2.4	64.995	GKS11-3M □□□132C22	108
	22	3070	1.0		27	2539	1.2	65.879	GKS09-3M □□□132C22	108
	21	3303	1.8		25	2732	2.2	70.887	GKS11-3M □□□132C22	108
	21	3307	0.9		25	2736	1.1	70.982	GKS09-3M □□□132C22	108
	19	3620	3.2		23	2994	3.8	77.681	GKS14-3M □□□132C22	108



Selection tables

50 Hz, 60 Hz: P_N = 7.5 kW

n_N	1460 r/min				1765 r/min			i		
f_N	50 Hz				60 Hz					
	n_2 [r/min]	M_2 [Nm]	c		n_2 [r/min]	M_2 [Nm]	c			
	18	3722	1.6		22	3079	2.0	79.873	GKS11-3M □□□132C22	108
	18	3727	0.8		22	3083	1.0	79.996	GKS09-3M □□□132C22	108
	16	4219	2.7		19	3490	3.3	90.551	GKS14-3M □□□132C22	108
	16	4274	1.4		19	3536	1.7	91.737	GKS11-3M □□□132C22	108
	15	4464	2.2		18	3693	2.7	97.467	GKS14-4M □□□132C22	124
	14	4754	2.4		17	3933	3.0	102.029	GKS14-3M □□□132C22	108
	14	4677	1.2		17	3869	1.5	102.119	GKS11-4M □□□132C22	124
	14	4816	1.3		17	3984	1.5	103.365	GKS11-3M □□□132C22	108
	13	5030	2.2		16	4161	2.6	109.822	GKS14-4M □□□132C22	124
	13	5121	2.3		16	4236	2.8	109.896	GKS14-3M □□□132C22	108
	13	5188	1.2		16	4291	1.4	111.335	GKS11-3M □□□132C22	108
	13	5270	1.1		15	4360	1.3	115.063	GKS11-4M □□□132C22	124
	12	5473	2.0		15	4527	2.4	119.493	GKS14-4M □□□132C22	124
	12	5770	2.0		14	4773	2.4	123.826	GKS14-3M □□□132C22	108
	12	5730	1.0		14	4740	1.2	125.095	GKS11-4M □□□132C22	124
	12	5845	1.0		14	4835	1.3	125.448	GKS11-3M □□□132C22	108
	11	6167	1.8		13	5101	2.2	134.640	GKS14-4M □□□132C22	124
	11	6473	1.8		13	5354	2.2	138.913	GKS14-3M □□□132C22	108
	10	6456	0.9		13	5340	1.1	140.952	GKS11-4M □□□132C22	124
	9.5	7019	0.8		12	5806	1.0	153.242	GKS11-4M □□□132C22	124
	9.3	7293	1.6		11	6033	1.9	156.522	GKS14-3M □□□132C22	108
	9.2	7239	1.6		11	5988	1.9	158.039	GKS14-4M □□□132C22	124
	8.2	8156	1.4		9.9	6747	1.7	178.072	GKS14-4M □□□132C22	124
	7.8	8693	1.3		9.4	7191	1.6	186.572	GKS14-3M □□□132C22	108
	7.5	8875	1.3		9.1	7341	1.6	193.754	GKS14-4M □□□132C22	124
	7.0	9795	1.2		8.4	8103	1.4	210.222	GKS14-3M □□□132C22	108
	6.7	9999	1.1		8.1	8272	1.4	218.315	GKS14-4M □□□132C22	124
	6.5	10551	1.1		7.8	8727	1.3	226.431	GKS14-3M □□□132C22	108
	6.2	10877	1.1		7.4	8997	1.3	237.467	GKS14-4M □□□132C22	124
	5.7	11888	1.0		6.9	9834	1.2	255.133	GKS14-3M □□□132C22	108
	5.5	12255	0.9		6.6	10138	1.1	267.568	GKS14-4M □□□132C22	124
	5.1	13336	0.9		6.2	11032	1.1	286.219	GKS14-3M □□□132C22	108



Selection tables

50 Hz, 60 Hz: P_N = 11.0 kW

n_N	1470 r/min				1775 r/min			i		
f_N	50 Hz				60 Hz					
	n_2 [r/min]	M_2 [Nm]	c		n_2 [r/min]	M_2 [Nm]	c			
	247	404	1.2		297	335	1.3	5.955	GKS07-3M □□□160C22	108
	178	560	1.0		214	464	1.1	8.254	GKS07-3M □□□160C22	108
	160	622	1.2		193	516	1.3	9.171	GKS07-3M □□□160C22	108
	145	687	1.2		175	569	1.3	10.124	GKS07-3M □□□160C22	108
	120	834	1.9		144	690	2.2	12.283	GKS09-3M □□□160C22	108
	116	863	1.0		139	715	1.1	12.711	GKS07-3M □□□160C22	108
	110	907	1.9		133	751	2.2	13.360	GKS09-3M □□□160C22	108
	99	1004	1.0		120	832	1.2	14.798	GKS07-3M □□□160C22	108
	93	1077	2.9		112	892	3.3	15.874	GKS11-3M □□□160C22	108
	91	1094	1.6		110	906	1.9	16.122	GKS09-3M □□□160C22	108
	88	1132	0.9		106	937	1.1	16.674	GKS07-3M □□□160C22	108
	85	1172	2.9		103	971	3.3	17.265	GKS11-3M □□□160C22	108
	85	1172	0.9		103	971	1.0	17.270	GKS07-3M □□□160C22	108
	84	1190	1.6		101	986	1.9	17.536	GKS09-3M □□□160C22	108
	75	1326	1.9		91	1098	2.2	19.541	GKS09-3M □□□160C22	108
	67	1495	1.8		80	1238	2.0	22.022	GKS09-3M □□□160C22	108
	57	1739	2.9		69	1440	3.3	25.615	GKS11-3M □□□160C22	108
	57	1741	1.6		69	1442	1.9	25.649	GKS09-3M □□□160C22	108
	53	1902	2.7		63	1575	3.1	28.021	GKS11-3M □□□160C22	108
	50	1984	1.5		61	1643	1.7	29.228	GKS09-3M □□□160C22	108
	47	2143	2.6		56	1775	2.9	31.573	GKS11-3M □□□160C22	108
	45	2236	1.3		54	1852	1.5	32.940	GKS09-3M □□□160C22	108
	42	2389	1.3		50	1978	1.4	35.193	GKS09-3M □□□160C22	108
	41	2426	2.3		50	2009	2.7	35.741	GKS11-3M □□□160C22	108
	37	2692	1.1		45	2229	1.3	39.662	GKS09-3M □□□160C22	108
	37	2733	2.1		44	2264	2.5	40.272	GKS11-3M □□□160C22	108
	34	2929	1.0		41	2425	1.2	43.146	GKS09-3M □□□160C22	108
	34	2972	2.0		40	2461	2.4	43.783	GKS11-3M □□□160C22	108
	30	3300	0.9		36	2733	1.1	48.625	GKS09-3M □□□160C22	108
	30	3348	1.8		36	2773	2.1	49.333	GKS11-3M □□□160C22	108
	26	3818	3.0		32	3162	3.6	56.251	GKS14-3M □□□160C22	108
	26	3915	1.5		31	3242	1.8	57.683	GKS11-3M □□□160C22	108
	23	4302	2.7		28	3563	3.2	63.382	GKS14-3M □□□160C22	108
	23	4411	1.4		27	3653	1.6	64.995	GKS11-3M □□□160C22	108
	21	4679	2.4		26	3875	3.0	68.942	GKS14-3M □□□160C22	108
	21	4811	1.2		25	3985	1.5	70.887	GKS11-3M □□□160C22	108
	19	5273	2.2		23	4367	2.6	77.681	GKS14-3M □□□160C22	108
	18	5421	1.1		22	4490	1.3	79.873	GKS11-3M □□□160C22	108
	16	6146	1.9		20	5090	2.3	90.551	GKS14-3M □□□160C22	108
	15	6503	1.5		18	5386	1.9	97.467	GKS14-4M □□□160C22	124



Selection tables

50 Hz, 60 Hz: P_N = 11.0 kW

n_N	1470 r/min				1775 r/min			i		
f_N	50 Hz				60 Hz					
	n_2 [r/min]	M_2 [Nm]	c		n_2 [r/min]	M_2 [Nm]	c			
	14	6925	1.7		17	5735	2.0	102.029	GKS14-3M □□□160C22	108
	13	7327	1.5		16	6068	1.8	109.822	GKS14-4M □□□160C22	124
	13	7459	1.6		16	6177	1.9	109.896	GKS14-3M □□□160C22	108
	12	7973	1.4		15	6603	1.6	119.493	GKS14-4M □□□160C22	124
	12	8405	1.4		14	6960	1.7	123.826	GKS14-3M □□□160C22	108
	11	8983	1.3		13	7440	1.5	134.640	GKS14-4M □□□160C22	124
	9.3	10544	1.1		11	8733	1.3	158.039	GKS14-4M □□□160C22	124
	8.3	11881	1.0		9.9	9840	1.2	178.072	GKS14-4M □□□160C22	124
	7.9	12664	0.9		9.5	10488	1.1	186.572	GKS14-3M □□□160C22	108
	7.6	12927	0.9		9.1	10706	1.1	193.754	GKS14-4M □□□160C22	124
	7.0	14269	0.8		8.4	11817	1.0	210.222	GKS14-3M □□□160C22	108



Selection tables

50 Hz, 60 Hz: P_N = 15.0 kW

n_N	1470 r/min				1775 r/min			i		
f_N	50 Hz				60 Hz					
	n_2 [r/min]	M_2 [Nm]	c		n_2 [r/min]	M_2 [Nm]	c			
	247	551	0.9		297	456	1.0	5.955	GKS07-3M □□□160C32	108
	160	849	0.9		193	703	1.0	9.171	GKS07-3M □□□160C32	108
	145	937	0.9		175	776	1.0	10.124	GKS07-3M □□□160C32	108
	122	1119	2.5		146	927	2.8	12.094	GKS11-3M □□□160C32	108
	120	1137	1.4		144	942	1.6	12.283	GKS09-3M □□□160C32	108
	112	1217	2.5		135	1008	2.8	13.154	GKS11-3M □□□160C32	108
	110	1237	1.4		133	1024	1.6	13.360	GKS09-3M □□□160C32	108
	93	1469	2.1		112	1217	2.4	15.874	GKS11-3M □□□160C32	108
	91	1492	1.2		110	1236	1.4	16.122	GKS09-3M □□□160C32	108
	85	1598	2.1		103	1323	2.4	17.265	GKS11-3M □□□160C32	108
	84	1623	1.2		101	1344	1.4	17.536	GKS09-3M □□□160C32	108
	75	1806	2.5		91	1496	2.8	19.515	GKS11-3M □□□160C32	108
	75	1809	1.4		91	1498	1.6	19.541	GKS09-3M □□□160C32	108
	67	2035	2.4		81	1685	2.7	21.989	GKS11-3M □□□160C32	108
	67	2038	1.3		80	1688	1.5	22.022	GKS09-3M □□□160C32	108
	57	2371	2.1		69	1963	2.4	25.615	GKS11-3M □□□160C32	108
	57	2374	1.2		69	1966	1.4	25.649	GKS09-3M □□□160C32	108
	53	2594	2.0		63	2148	2.3	28.021	GKS11-3M □□□160C32	108
	50	2705	1.1		61	2240	1.2	29.228	GKS09-3M □□□160C32	108
	47	2922	1.9		56	2420	2.2	31.573	GKS11-3M □□□160C32	108
	45	3049	1.0		54	2525	1.1	32.940	GKS09-3M □□□160C32	108
	42	3211	3.1		51	2659	3.6	34.692	GKS14-3M □□□160C32	108
	42	3257	0.9		50	2698	1.1	35.193	GKS09-3M □□□160C32	108
	41	3308	1.7		50	2740	2.0	35.741	GKS11-3M □□□160C32	108
	38	3618	3.0		45	2996	3.5	39.089	GKS14-3M □□□160C32	108
	37	3671	0.8		45	3040	0.9	39.662	GKS09-3M □□□160C32	108
	37	3727	1.6		44	3087	1.8	40.272	GKS11-3M □□□160C32	108
	35	3937	2.7		42	3260	3.3	42.531	GKS14-3M □□□160C32	108
	34	4052	1.4		40	3356	1.7	43.783	GKS11-3M □□□160C32	108
	31	4436	2.5		37	3673	3.1	47.923	GKS14-3M □□□160C32	108
	30	4566	1.3		36	3782	1.6	49.333	GKS11-3M □□□160C32	108
	26	5206	2.2		32	4312	2.7	56.251	GKS14-3M □□□160C32	108
	26	5339	1.1		31	4422	1.4	57.683	GKS11-3M □□□160C32	108
	23	5866	2.0		28	4858	2.4	63.382	GKS14-3M □□□160C32	108
	23	6016	1.0		27	4982	1.2	64.995	GKS11-3M □□□160C32	108
	21	6381	1.8		26	5285	2.2	68.942	GKS14-3M □□□160C32	108
	21	6561	0.9		25	5434	1.1	70.887	GKS11-3M □□□160C32	108
	19	7190	1.6		23	5954	1.9	77.681	GKS14-3M □□□160C32	108
	18	7393	0.8		22	6122	1.0	79.873	GKS11-3M □□□160C32	108
	16	8381	1.4		20	6941	1.7	90.551	GKS14-3M □□□160C32	108



Selection tables

50 Hz, 60 Hz: P_N = 15.0 kW

n_N	1470 r/min				1775 r/min			i		
f_N	50 Hz				60 Hz					
	n_2 [r/min]	M_2 [Nm]	c		n_2 [r/min]	M_2 [Nm]	c			
	15	8868	1.1		18	7344	1.4	97.467	GKS14-4M □□□160C32	124
	14	9443	1.2		17	7821	1.5	102.029	GKS14-3M □□□160C32	108
	13	9992	1.1		16	8275	1.3	109.822	GKS14-4M □□□160C32	124
	13	10172	1.2		16	8424	1.4	109.896	GKS14-3M □□□160C32	108
	12	10872	1.0		15	9004	1.2	119.493	GKS14-4M □□□160C32	124
	12	11461	1.0		14	9492	1.2	123.826	GKS14-3M □□□160C32	108
	11	12250	0.9		13	10145	1.1	134.640	GKS14-4M □□□160C32	124
	9.3	14379	0.8		11	11908	1.0	158.039	GKS14-4M □□□160C32	124



Selection tables

50 Hz, 60 Hz: P_N = 18.5 kW

n_N	1475 r/min				1775 r/min			i		
f_N	50 Hz				60 Hz					
	n_2 [r/min]	M_2 [Nm]	c		n_2 [r/min]	M_2 [Nm]	c			
	122	1376	2.0		147	1143	2.3	12.094	GKS11-3M □□□180C12	108
	120	1397	1.2		145	1161	1.3	12.283	GKS09-3M □□□180C12	108
	112	1496	2.0		135	1244	2.3	13.154	GKS11-3M □□□180C12	108
	110	1520	1.2		133	1263	1.3	13.360	GKS09-3M □□□180C12	108
	93	1806	1.7		112	1501	1.9	15.874	GKS11-3M □□□180C12	108
	92	1834	1.0		110	1524	1.1	16.122	GKS09-3M □□□180C12	108
	89	1894	3.1		107	1574	3.6	16.646	GKS14-3M □□□180C12	108
	85	1964	1.7		103	1632	1.9	17.265	GKS11-3M □□□180C12	108
	84	1995	1.0		101	1658	1.1	17.536	GKS09-3M □□□180C12	108
	81	2083	3.0		97	1731	3.4	18.311	GKS14-3M □□□180C12	108
	76	2220	2.0		91	1845	2.3	19.515	GKS11-3M □□□180C12	108
	76	2223	1.2		91	1847	1.3	19.541	GKS09-3M □□□180C12	108
	67	2502	2.0		81	2079	2.2	21.989	GKS11-3M □□□180C12	108
	67	2505	1.1		81	2082	1.2	22.022	GKS09-3M □□□180C12	108
	60	2810	3.1		72	2335	3.6	24.696	GKS14-3M □□□180C12	108
	58	2914	1.7		69	2422	1.9	25.615	GKS11-3M □□□180C12	108
	58	2918	1.0		69	2425	1.1	25.649	GKS09-3M □□□180C12	108
	54	3090	3.0		65	2568	3.4	27.165	GKS14-3M □□□180C12	108
	53	3188	1.6		63	2649	1.8	28.021	GKS11-3M □□□180C12	108
	51	3325	0.9		61	2763	1.0	29.228	GKS09-3M □□□180C12	108
	48	3482	2.9		58	2894	3.3	30.609	GKS14-3M □□□180C12	108
	47	3592	1.5		56	2985	1.7	31.573	GKS11-3M □□□180C12	108
	43	3947	2.5		51	3280	2.9	34.692	GKS14-3M □□□180C12	108
	41	4066	1.4		50	3379	1.6	35.741	GKS11-3M □□□180C12	108
	38	4447	2.5		45	3695	2.8	39.089	GKS14-3M □□□180C12	108
	37	4582	1.3		44	3807	1.5	40.272	GKS11-3M □□□180C12	108
	35	4839	2.2		42	4021	2.7	42.531	GKS14-3M □□□180C12	108
	34	4981	1.2		41	4139	1.4	43.783	GKS11-3M □□□180C12	108
	31	5452	2.1		37	4531	2.5	47.923	GKS14-3M □□□180C12	108
	30	5612	1.1		36	4664	1.3	49.333	GKS11-3M □□□180C12	108
	26	6399	1.8		32	5318	2.2	56.251	GKS14-3M □□□180C12	108
	26	6562	0.9		31	5453	1.1	57.683	GKS11-3M □□□180C12	108
	23	7211	1.6		28	5992	1.9	63.382	GKS14-3M □□□180C12	108
	23	7394	0.8		27	6144	1.0	64.995	GKS11-3M □□□180C12	108
	21	7843	1.5		26	6518	1.8	68.942	GKS14-3M □□□180C12	108
	19	8837	1.3		23	7344	1.6	77.681	GKS14-3M □□□180C12	108
	16	10302	1.1		20	8560	1.3	90.551	GKS14-3M □□□180C12	108
	15	10900	0.9		18	9058	1.1	97.467	GKS14-4M □□□180C12	124
	15	11607	1.0		17	9646	1.2	102.029	GKS14-3M □□□180C12	108
	13	12282	0.9		16	10206	1.1	109.822	GKS14-4M □□□180C12	124



Selection tables

50 Hz, 60 Hz: P_N = 18.5 kW

n_N	1475 r/min				1775 r/min			i		
f_N	50 Hz				60 Hz					
	n_2 [r/min]	M_2 [Nm]	c		n_2 [r/min]	M_2 [Nm]	c			
	13	12502	0.9		16	10389	1.1	109.896	GKS14-3M □□□180C12	108
	12	13363	0.8		15	11105	1.0	119.493	GKS14-4M □□□180C12	124
	12	14087	0.8		14	11706	1.0	123.826	GKS14-3M □□□180C12	108



Selection tables

50 Hz, 60 Hz: P_N = 22.0 kW

n_N	1470 r/min				1775 r/min			i		
f_N	50 Hz				60 Hz					
	n_2 [r/min]	M_2 [Nm]	c		n_2 [r/min]	M_2 [Nm]	c			
	122	1642	1.7		146	1360	1.9	12.094	GKS11-3M □□□180C32	108
	120	1667	1.0		144	1381	1.1	12.283	GKS09-3M □□□180C32	108
	112	1786	1.7		135	1479	1.9	13.154	GKS11-3M □□□180C32	108
	110	1814	1.0		133	1502	1.1	13.360	GKS09-3M □□□180C32	108
	93	2155	1.4		112	1785	1.6	15.874	GKS11-3M □□□180C32	108
	91	2189	0.8		110	1813	0.9	16.122	GKS09-3M □□□180C32	108
	88	2260	2.6		106	1871	3.0	16.646	GKS14-3M □□□180C32	108
	85	2344	1.4		103	1941	1.6	17.265	GKS11-3M □□□180C32	108
	84	2380	0.8		101	1971	0.9	17.536	GKS09-3M □□□180C32	108
	80	2486	2.5		97	2059	2.8	18.311	GKS14-3M □□□180C32	108
	75	2649	1.7		91	2194	1.9	19.515	GKS11-3M □□□180C32	108
	75	2653	1.0		91	2197	1.1	19.541	GKS09-3M □□□180C32	108
	67	2985	1.6		81	2472	1.9	21.989	GKS11-3M □□□180C32	108
	67	2990	0.9		80	2476	1.0	22.022	GKS09-3M □□□180C32	108
	60	3352	2.6		72	2776	3.0	24.696	GKS14-3M □□□180C32	108
	57	3477	1.4		69	2880	1.6	25.615	GKS11-3M □□□180C32	108
	57	3482	0.8		69	2884	0.9	25.649	GKS09-3M □□□180C32	108
	54	3688	2.5		65	3054	2.8	27.165	GKS14-3M □□□180C32	108
	53	3804	1.4		63	3150	1.5	28.021	GKS11-3M □□□180C32	108
	48	4155	2.4		58	3441	2.8	30.609	GKS14-3M □□□180C32	108
	47	4286	1.3		56	3550	1.5	31.573	GKS11-3M □□□180C32	108
	42	4709	2.1		51	3900	2.4	34.692	GKS14-3M □□□180C32	108
	41	4852	1.2		50	4018	1.3	35.741	GKS11-3M □□□180C32	108
	38	5306	2.1		45	4395	2.4	39.089	GKS14-3M □□□180C32	108
	37	5467	1.1		44	4528	1.2	40.272	GKS11-3M □□□180C32	108
	35	5774	1.9		42	4782	2.3	42.531	GKS14-3M □□□180C32	108
	34	5944	1.0		40	4922	1.2	43.783	GKS11-3M □□□180C32	108
	31	6505	1.7		37	5388	2.1	47.923	GKS14-3M □□□180C32	108
	30	6697	0.9		36	5546	1.1	49.333	GKS11-3M □□□180C32	108
	26	7636	1.5		32	6324	1.8	56.251	GKS14-3M □□□180C32	108
	23	8604	1.3		28	7126	1.6	63.382	GKS14-3M □□□180C32	108
	21	9359	1.2		26	7751	1.5	68.942	GKS14-3M □□□180C32	108
	19	10545	1.1		23	8733	1.3	77.681	GKS14-3M □□□180C32	108
	16	12292	0.9		20	10180	1.1	90.551	GKS14-3M □□□180C32	108
	14	13850	0.8		17	11470	1.0	102.029	GKS14-3M □□□180C32	108



Selection tables

50 Hz, 60 Hz: P_N = 30.0 kW

n_N	1465 r/min				1770 r/min			i		
f_N	50 Hz				60 Hz					
	n_2 [r/min]	M_2 [Nm]	c		n_2 [r/min]	M_2 [Nm]	c			
	121	2246	1.2		146	1859	1.4	12.094	GKS11-3M □□□180C42	108
	111	2443	1.2		134	2022	1.4	13.154	GKS11-3M □□□180C42	108
	92	2948	1.0		111	2440	1.2	15.874	GKS11-3M □□□180C42	108
	88	3092	1.9		106	2559	2.2	16.646	GKS14-3M □□□180C42	108
	85	3207	1.0		102	2654	1.2	17.265	GKS11-3M □□□180C42	108
	80	3401	1.8		96	2815	2.1	18.311	GKS14-3M □□□180C42	108
	75	3625	1.2		90	3000	1.4	19.515	GKS11-3M □□□180C42	108
	67	4084	1.2		80	3380	1.4	21.989	GKS11-3M □□□180C42	108
	59	4587	1.9		72	3797	2.2	24.696	GKS14-3M □□□180C42	108
	57	4758	1.0		69	3938	1.2	25.615	GKS11-3M □□□180C42	108
	54	5046	1.8		65	4176	2.1	27.165	GKS14-3M □□□180C42	108
	52	5205	1.0		63	4308	1.1	28.021	GKS11-3M □□□180C42	108
	48	5685	1.8		58	4706	2.0	30.609	GKS14-3M □□□180C42	108
	46	5865	0.9		56	4854	1.1	31.573	GKS11-3M □□□180C42	108
	42	6444	1.6		51	5333	1.8	34.692	GKS14-3M □□□180C42	108
	41	6639	0.9		49	5495	1.0	35.741	GKS11-3M □□□180C42	108
	38	7261	1.5		45	6009	1.7	39.089	GKS14-3M □□□180C42	108
	34	7900	1.4		42	6539	1.6	42.531	GKS14-3M □□□180C42	108
	31	8901	1.3		37	7368	1.5	47.923	GKS14-3M □□□180C42	108
	26	10448	1.1		31	8648	1.3	56.251	GKS14-3M □□□180C42	108
	23	11773	1.0		28	9744	1.2	63.382	GKS14-3M □□□180C42	108
	21	12806	0.9		26	10599	1.1	68.942	GKS14-3M □□□180C42	108



Selection tables

50 Hz, 60 Hz: P_N = 37.0 kW

n_N	1483 r/min				1787 r/min			i		
f_N	50 Hz				60 Hz					
	n_2 [r/min]	M_2 [Nm]	c		n_2 [r/min]	M_2 [Nm]	c			
	123	2737	1.0		147	2271	1.2	12.094	GKS11-3M □□□225C12	108
	119	2814	1.8		143	2335	2.0	12.435	GKS14-3M □□□225C12	108
	113	2977	1.0		136	2470	1.2	13.154	GKS11-3M □□□225C12	108
	110	3061	1.8		132	2540	2.0	13.525	GKS14-3M □□□225C12	108
	93	3592	0.9		112	2981	1.0	15.874	GKS11-3M □□□225C12	108
	89	3767	1.6		107	3126	1.8	16.646	GKS14-3M □□□225C12	108
	86	3907	0.9		103	3243	1.0	17.265	GKS11-3M □□□225C12	108
	81	4144	1.5		97	3439	1.7	18.311	GKS14-3M □□□225C12	108
	76	4416	1.0		91	3665	1.2	19.515	GKS11-3M □□□225C12	108
	74	4541	1.8		89	3768	2.0	20.065	GKS14-3M □□□225C12	108
	67	4976	1.0		81	4130	1.1	21.989	GKS11-3M □□□225C12	108
	66	5116	1.8		79	4246	2.0	22.609	GKS14-3M □□□225C12	108
	60	5589	1.6		72	4638	1.8	24.696	GKS14-3M □□□225C12	108
	58	5797	0.9		70	4811	1.0	25.615	GKS11-3M □□□225C12	108
	55	6148	1.5		66	5102	1.7	27.165	GKS14-3M □□□225C12	108
	53	6341	0.8		64	5263	0.9	28.021	GKS11-3M □□□225C12	108
	49	6927	1.5		58	5748	1.7	30.609	GKS14-3M □□□225C12	108
	43	7851	1.3		51	6515	1.5	34.692	GKS14-3M □□□225C12	108
	38	8846	1.2		46	7341	1.4	39.089	GKS14-3M □□□225C12	108
	35	9625	1.1		42	7988	1.4	42.531	GKS14-3M □□□225C12	108
	31	10845	1.0		37	9000	1.3	47.923	GKS14-3M □□□225C12	108
	26	12730	0.9		32	10564	1.1	56.251	GKS14-3M □□□225C12	108
	23	14344	0.8		28	11903	1.0	63.382	GKS14-3M □□□225C12	108



Selection tables

50 Hz, 60 Hz: P_N = 45.0 kW

n_N	1480 r/min				1784 r/min			i		
f_N	50 Hz				60 Hz					
	n_2 [r/min]	M_2 [Nm]	c		n_2 [r/min]	M_2 [Nm]	c			
	122	3335	0.8		148	2767	0.9	12.094	GKS11-3M □□□225C22	108
	119	3429	1.5		143	2845	1.7	12.435	GKS14-3M □□□225C22	108
	113	3628	0.8		136	3010	0.9	13.154	GKS11-3M □□□225C22	108
	109	3730	1.5		132	3094	1.7	13.525	GKS14-3M □□□225C22	108
	89	4591	1.3		107	3809	1.5	16.646	GKS14-3M □□□225C22	108
	81	5050	1.2		97	4189	1.4	18.311	GKS14-3M □□□225C22	108
	76	5382	0.8		91	4465	0.9	19.515	GKS11-3M □□□225C22	108
	74	5534	1.5		89	4591	1.7	20.065	GKS14-3M □□□225C22	108
	67	6064	0.8		81	5031	0.9	21.989	GKS11-3M □□□225C22	108
	66	6235	1.5		79	5173	1.7	22.609	GKS14-3M □□□225C22	108
	60	6811	1.3		72	5650	1.5	24.696	GKS14-3M □□□225C22	108
	55	7492	1.2		66	6215	1.4	27.165	GKS14-3M □□□225C22	108
	48	8442	1.2		58	7003	1.4	30.609	GKS14-3M □□□225C22	108
	43	9568	1.0		51	7937	1.2	34.692	GKS14-3M □□□225C22	108
	38	10780	1.0		46	8943	1.2	39.089	GKS14-3M □□□225C22	108
	35	11730	0.9		42	9731	1.1	42.531	GKS14-3M □□□225C22	108
	31	13217	0.9		37	10965	1.0	47.923	GKS14-3M □□□225C22	108





Dimensions

GKS□□-3M H□R

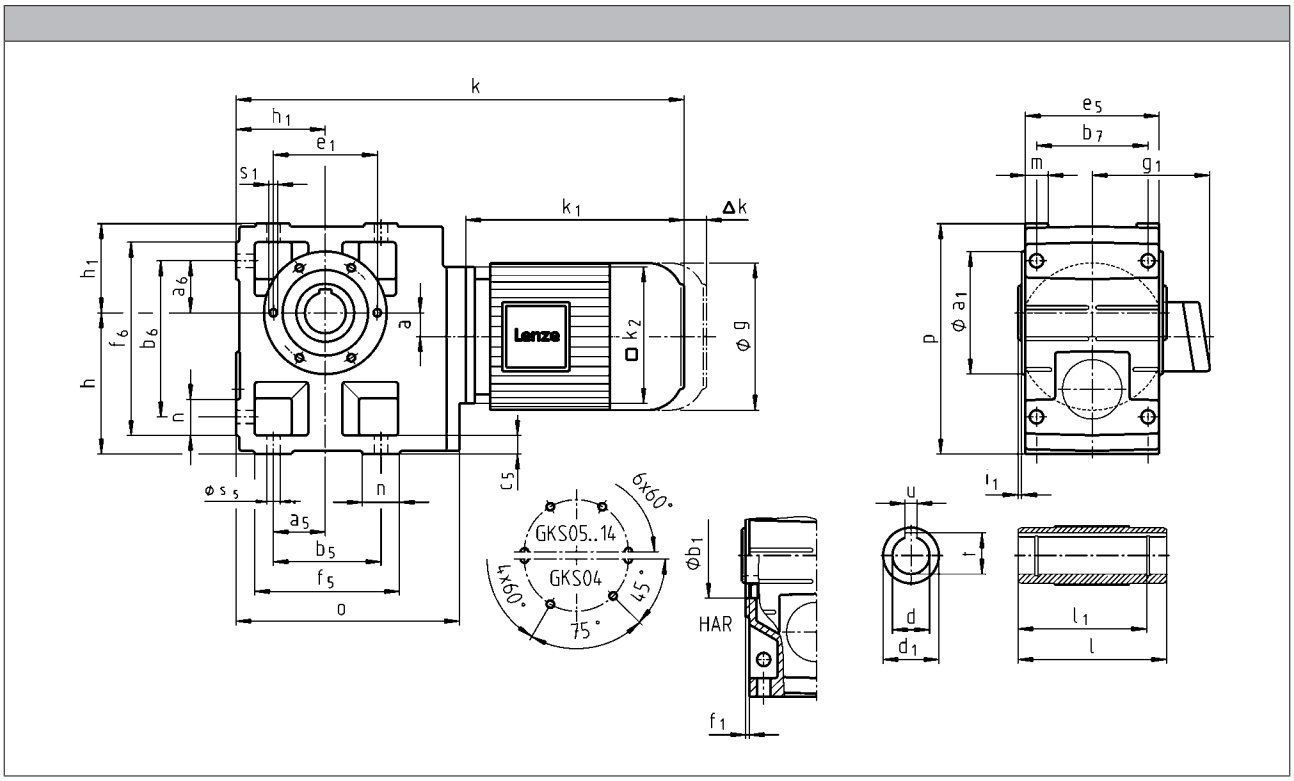



		063C11 063C12 063C31 063C32	063C42	071C11 071C13 071C31 071C32 071C33 071C42	080C13 080C33
g		123		139	156
g_1	MDEMAXX	100		109	150
	MDEMABR	107		118	132
k_1	MDEMAXX	187		207	224.5
k_2		120			145
Δ k	MDEMABR	40		52	73
	MDFMAXX	128			
	MDFMABR	170		165	183
		k			
GKS04		399		419	441
GKS05			419	439	461
GKS06			475	495	517
GKS07					573

	a	h[1]	h_1	o	p[1]
GKS04	20	100	71	203	171
GKS05	23	125	80	232	205
GKS06	28	150	100	291	250
GKS07	34	190	120	354	310

	d	d_1	l[1]	l_1	u	t	i_1	a_1	b_1	e_1	f_1	s_1
	H7				JS9	+0,2			H7			
GKS04	25 30	45 45	115 115	100 100	8 8	28.3 33.3	2.5 2.5	104	75	90	3	M6x12
GKS05	30 35	50 50	140 140	124 124	8 10	33.3 38.3	4 4	118	80	100	4	M8x15
GKS06	40 45	65 65	160 160	140 140	12 14	43.3 48.8	5 5	140	100	120	4	M10x16
GKS07	50 55	75 75	200 200	175 175	14 16	53.8 59.3	5 5	165	115	140	5	M12x18

	a_5	a_6	b_5	b_6	b_7	c_5	e_5	f_5	f_6	m	n	s_5
GKS04	45	45	110	119	85	14	105	132	141	21	22	9
GKS05	47.5	47.5	115	140	105	17	115	144	169	21	29	11
GKS06	60	60	155	170	120	20	145	191	206	23	36	14
GKS07	70	70	190	210	150	25	180	235	255	28	45	18

[1] k_2 !



Dimensions

GKS□□-3M H□R

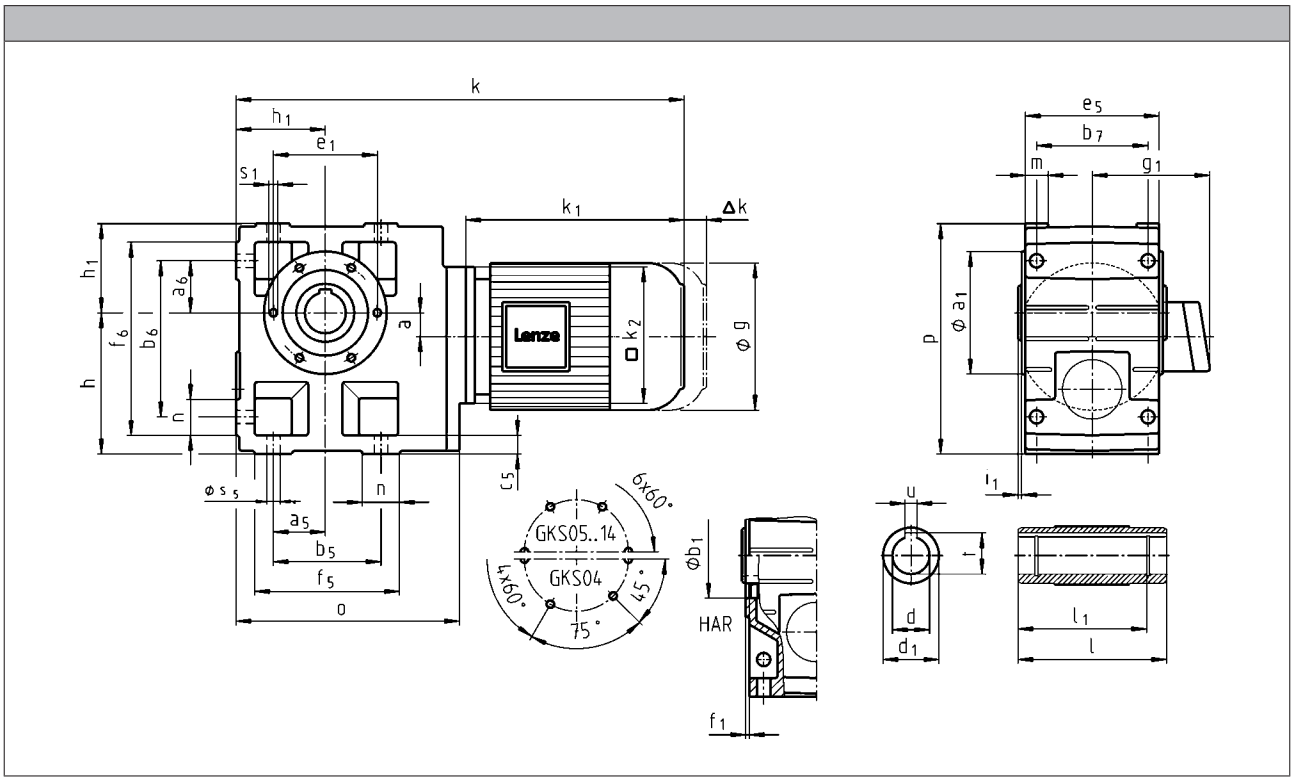

		080C32	090C12	090C32	100C12	100C32	112C22
g		156	176		194		218
g_1	MHEMAXX	150	152	157	166		176
	MHEMABR	132	137		147		158
k_1	MHEMAXX	224.5	274		309	324	363
k_2		145	180				222
Δ k	MHEMABR	73	68		76		90
	MHFMAXX		128		109		102
	MHFMABR	183	181		170		183
		k					
	GKS04	441	501				
	GKS05	461	521		556	571	
	GKS06	517	577		612	627	672
	GKS07	573	633		668	683	728
	GKS09		704		739	754	799
	GKS11				830	845	890
	GKS14						989



		132C12 132C22	160C22	160C32	180C12 180C32	180C42	225C12 225C22
g		258	310		348		447
g_1	MHEMAXX	195	210		230		346
	MHEMABR	187	210		230		346
k_1	MHEMAXX	403	457.5	501.5	561	618	848
k_2		265	300				
Δ k	MHEMABR	109.5	105		113		
	MHFMAXX	115	149			155	213
	MHFMABR	201.5	179		215		213
		k					
GKS06		720					
GKS07		776	835	879			
GKS09		847	906	950	1010		
GKS11		938	997	1041	1101	1158	1388
GKS14		1037	1096	1140	1200	1257	1487

	a	h[1)]	h_1	o	p[1)]
GKS04	20	100	71	203	171
GKS05	23	125	80	232	205
GKS06	28	150	100	291	250
GKS07	34	190	120	354	310
GKS09	41	236	150	429	386
GKS11	54	300	185	527	485
GKS14	67	375	230	636	605

	d	d_1	l[1)]	l_1	u	t	i_1	a_1	b_1	e_1	f_1	s_1
	H7				JS9	+0,2			H7			
GKS04	25 30	45 45	115 115	100 100	8 8	28.3 33.3	2.5 2.5	104	75	90	3	M6x12
GKS05	30 35	50 50	140 140	124 124	8 10	33.3 38.3	4 4	118	80	100	4	M8x15
GKS06	40 45	65 65	160 160	140 140	12 14	43.3 48.8	5 5	140	100	120	4	M10x16
GKS07	50 55	75 75	200 200	175 175	14 16	53.8 59.3	5 5	165	115	140	5	M12x18
GKS09	60 70	95 95	240 240	210 210	18 20	64.4 74.9	5 5	205	145	175	6	M16x24
GKS11	70 80	108 108	290 290	250 250	20 22	74.9 85.4	6 6	240	170	205	4	M20x32
GKS14	100	135	350	305	28	106.4	7	290	170	250	6	M24x35

	a_5	a_6	b_5	b_6	b_7	c_5	e_5	f_5	f_6	m	n	s_5
GKS04	45	45	110	119	85	14	105	132	141	21	22	9
GKS05	47.5	47.5	115	140	105	17	115	144	169	21	29	11
GKS06	60	60	155	170	120	20	145	191	206	23	36	14
GKS07	70	70	190	210	150	25	180	235	255	28	45	18
GKS09	90	90	240	266	185	30	222	300	326	37	60	22
GKS11	105	105	290	325	225	40	270	363	398	43	73	26
GKS14	135	135	360	415	275	50	328	442	497	52	82	33

[1)] k_2 !



Dimensions

GKS□□-3M HAK

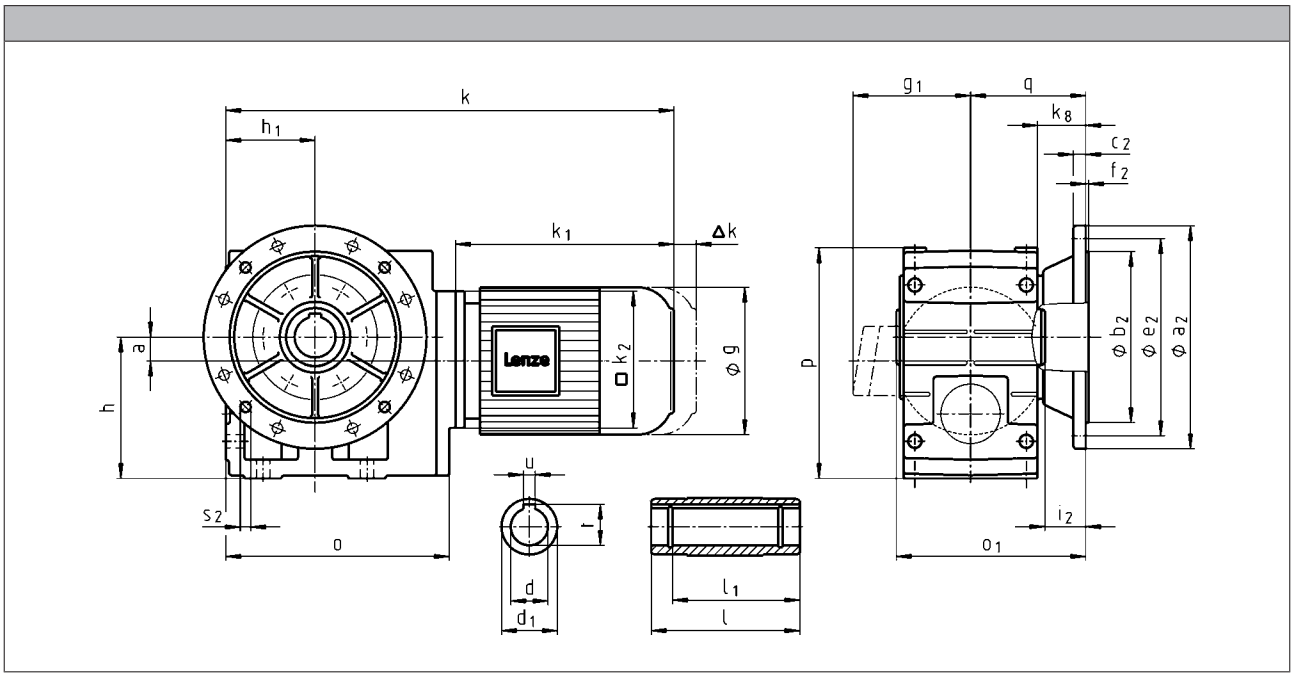



		063C11 063C12 063C31 063C32	063C42	071C11 071C13 071C31 071C32 071C33 071C42	080C13 080C33
g		123		139	156
g_1	MDEMAXX	100		109	150
	MDEMABR	107		118	132
k_1	MDEMAXX	187		207	224.5
k_2		120			145
Δ k	MDEMABR	40		52	73
	MDFMAXX	128			
	MDFMABR	170		165	183
		k			
GKS04		399		419	441
GKS05			419	439	461
GKS06			475	495	517
GKS07					573

	a	h[1)]	h_1	k_8	o	p[1)]	q
GKS04	20	100	71	38.5	203	171	91
GKS05	23	125	80	40	232	205	103.5
GKS06	28	150	100	49	291	250	121.5
GKS07	34	190	120	65.5	354	310	155.5

	d H7	d_1	l	l_1	u JS9	t +0,2	i_2	o_1[1)]	a_2	b_2 j7	c_2	e_2	f_2	s_2
GKS04	25 30	45 45	115 115	100 100	8 8	28.3 33.3	33.5 33.5	148.5 148.5	160	110	10	130	3.5	4 x 9
GKS05	30 35	50 50	140 140	124 124	8 10	33.3 38.3	33 33	173.5 173.5	200	130	12	165	4	4 x 11
GKS06	40 45	65 65	160 160	140 140	12 14	43.3 48.8	42 41	201.5 201.5	200 250	180 130	12 15	165 215	3.5 4	4 x 11 4 x 14
GKS07	50 55	75 75	200 200	175 175	14 16	53.8 59.3	55 55	255.5 255.5	250 300	180 230	15 17	215 265	4 4	4 x 14 4 x 14

[1)] k_2 !



Dimensions

GKS□□-3M HAK

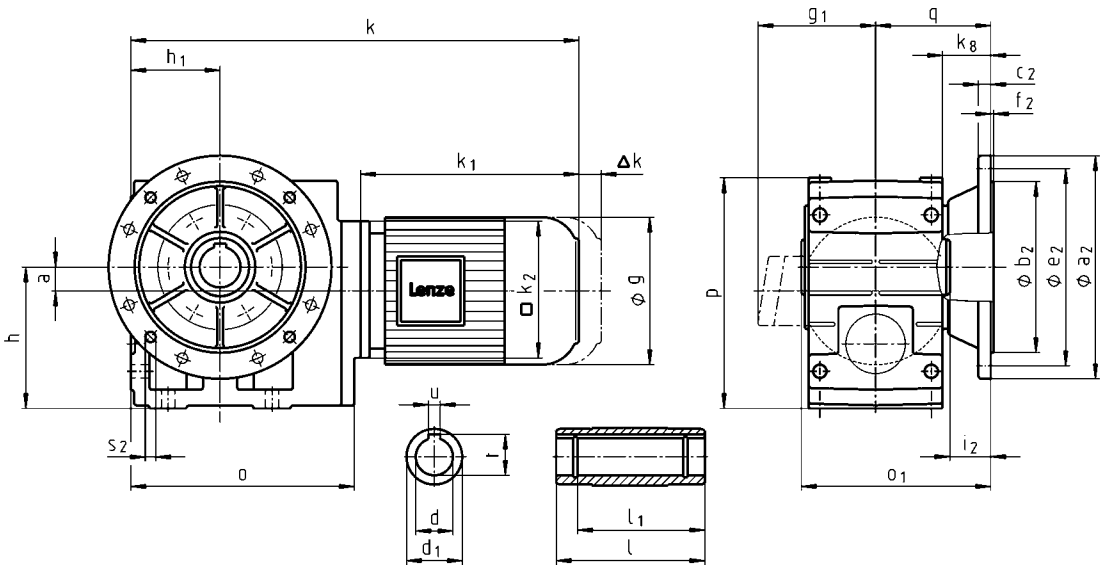

		080C32	090C12	090C32	100C12	100C32	112C22
g		156	176		194		218
g_1	MHEMAXX	150	152	157	166		176
	MHEMABR	132	137		147		158
k_1	MHEMAXX	224.5	274		309	324	363
k_2		145	180				222
Δ k	MHEMABR	73	68		76		90
	MHFMAXX		128		109		102
	MHFMABR	183	181		170		183
		k					
GKS04		441	501				
GKS05		461	521		556	571	
GKS06		517	577		612	627	672
GKS07		573	633		668	683	728
GKS09			704		739	754	799
GKS11					830	845	890
GKS14							989



		132C12 132C22	160C22	160C32	180C12 180C32	180C42	225C12 225C22
g		258	310		348		447
g_1	MHEMAXX	195	210		230		346
	MHEMABR	187	210		230		346
k_1	MHEMAXX	403	457.5	501.5	561	618	848
k_2		265	300				
Δ k	MHEMABR	109.5	105		113		
	MHFMAXX	115	149			155	213
	MHFMABR	201.5	179		215		213
		k					
GKS06		720					
GKS07		776	835	879			
GKS09		847	906	950	1010		
GKS11		938	997	1041	1101	1158	1388
GKS14		1037	1096	1140	1200	1257	1487

	a	h[1)]	h_1	k_8	o	p[1)]	q
GKS04	20	100	71	38.5	203	171	91
GKS05	23	125	80	40	232	205	103.5
GKS06	28	150	100	49	291	250	121.5
GKS07	34	190	120	65.5	354	310	155.5
GKS09	41	236	150	69.5	429	386	180.5
GKS11	54	300	185	70.5	527	485	205.5
GKS14	67	375	230	71.5	636	605	235.5

	d	d_1	l	l_1	u	t	i_2	o_1[1)]	a_2	b_2	c_2	e_2	f_2	s_2
	H7				JS9	+0,2				j7				
GKS04	25 30	45 45	115 115	100 100	8 8	28.3 33.3	33.5 33.5	148.5 148.5	160	110	10	130	3.5	4 x 9
GKS05	30 35	50 50	140 140	124 124	8 10	33.3 38.3	33 33	173.5 173.5	200	130	12	165	4	4 x 11
GKS06	40 45	65 65	160 160	140 140	12 14	43.3 48.8	42 41	201.5 201.5	200 250	180 130	12 15	165 215	3.5 4	4 x 11 4 x 14
GKS07	50 55	75 75	200 200	175 175	14 16	53.8 59.3	55 55	255.5 255.5	250 300	180 230	15 17	215 265	4 4	4 x 14 4 x 14
GKS09	60 70	95 95	240 240	210 210	18 20	64.4 74.9	60 60	300.5 300.5	350	250	18	300	4	4 x 17.5
GKS11	70 80	108 108	290 290	250 250	20 22	74.9 85.4	60 60	350.5 350.5	400 450	300 350	20 22	350 400	5 5	4 x 17.5 8 x 17.5
GKS14	100	135	350	305	28	106.4	60	410.5	450	350	22	400	5	8 x 17.5

[1)] k_2 !



Dimensions

GKS□□-3M V□R

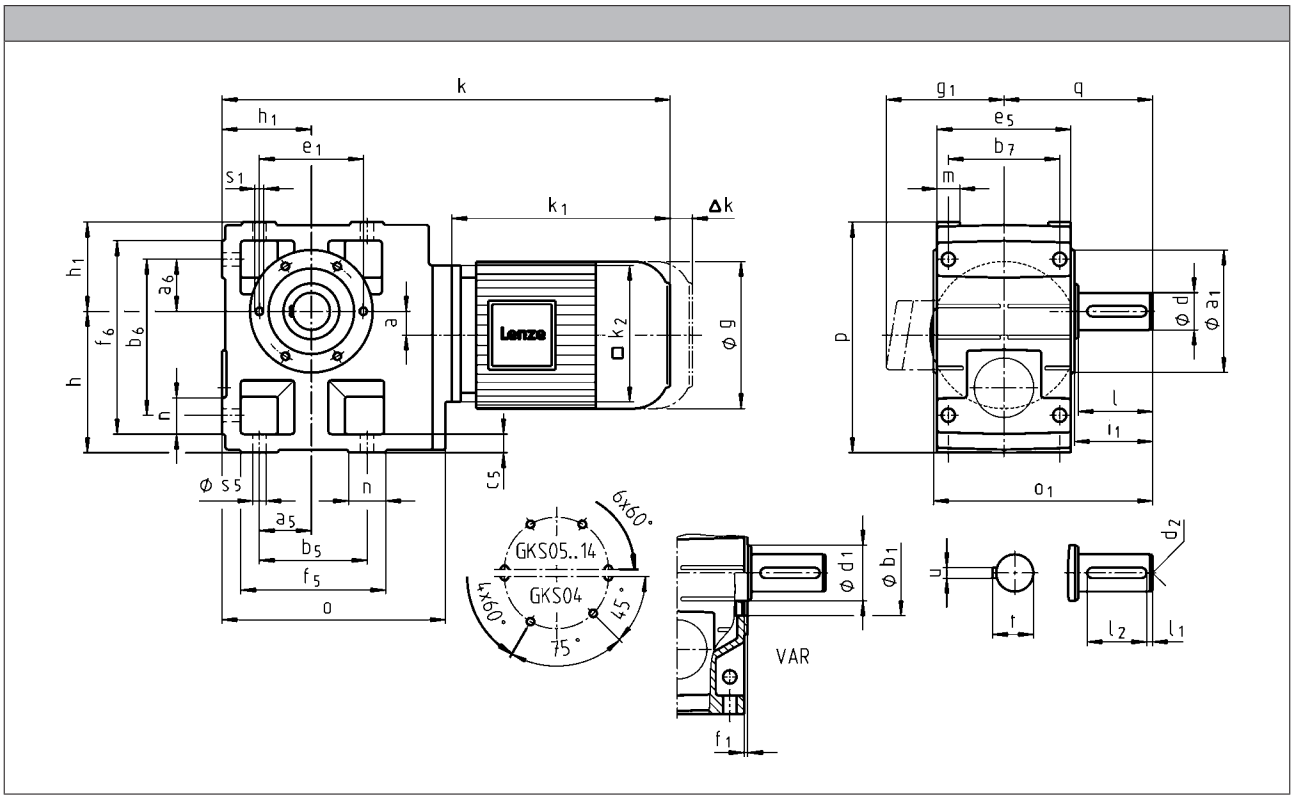



		063C11 063C12 063C31 063C32	063C42	071C11 071C13 071C31 071C32 071C33 071C42	080C13 080C33
g		123		139	156
g_1	MDEMAXX	100		109	150
	MDEMABR	107		118	132
k_1	MDEMAXX	187		207	224.5
k_2		120			145
Δ k	MDEMABR	40		52	73
	MDFMAXX	128			
	MDFMABR	170		165	183
		k			
GKS04		399		419	441
GKS05			419	439	461
GKS06			475	495	517
GKS07					573

	a	h[1)]	h_1	o	p[1)]	q
GKS04	20	100	71	203	171	107.5
GKS05	23	125	80	232	205	130
GKS06	28	150	100	291	250	160
GKS07	34	190	120	354	310	200

	d	d_1	d_2	l	l_1	l_2	u	t	i_1	o_1[1)]	a_1	b_1	e_1	f_1	s_1
	k6											H7			
GKS04	25	45	M10	50	6	40	8	28	52.5	162.5	104	75	90	3	M6x12
GKS05	30	45	M10	60	6	45	8	33	64	196.5	118	80	100	4	M8x15
GKS06	40	65	M16	80	7	63	12	43	85	235.5	140	100	120	4	M10x16
GKS07	50	75	M16	100	8	80	14	53.5	105	295.5	165	115	140	5	M12x18

	a_5	a_6	b_5	b_6	b_7	c_5	e_5	f_5	f_6	m	n	s_5
GKS04	45	45	110	119	85	14	105	132	141	21	22	9
GKS05	47.5	47.5	115	140	105	17	115	144	169	21	29	11
GKS06	60	60	155	170	120	20	145	191	206	23	36	14
GKS07	70	70	190	210	150	25	180	235	255	28	45	18

[1)] k_2 !



Dimensions

GKS□□-3M V□R

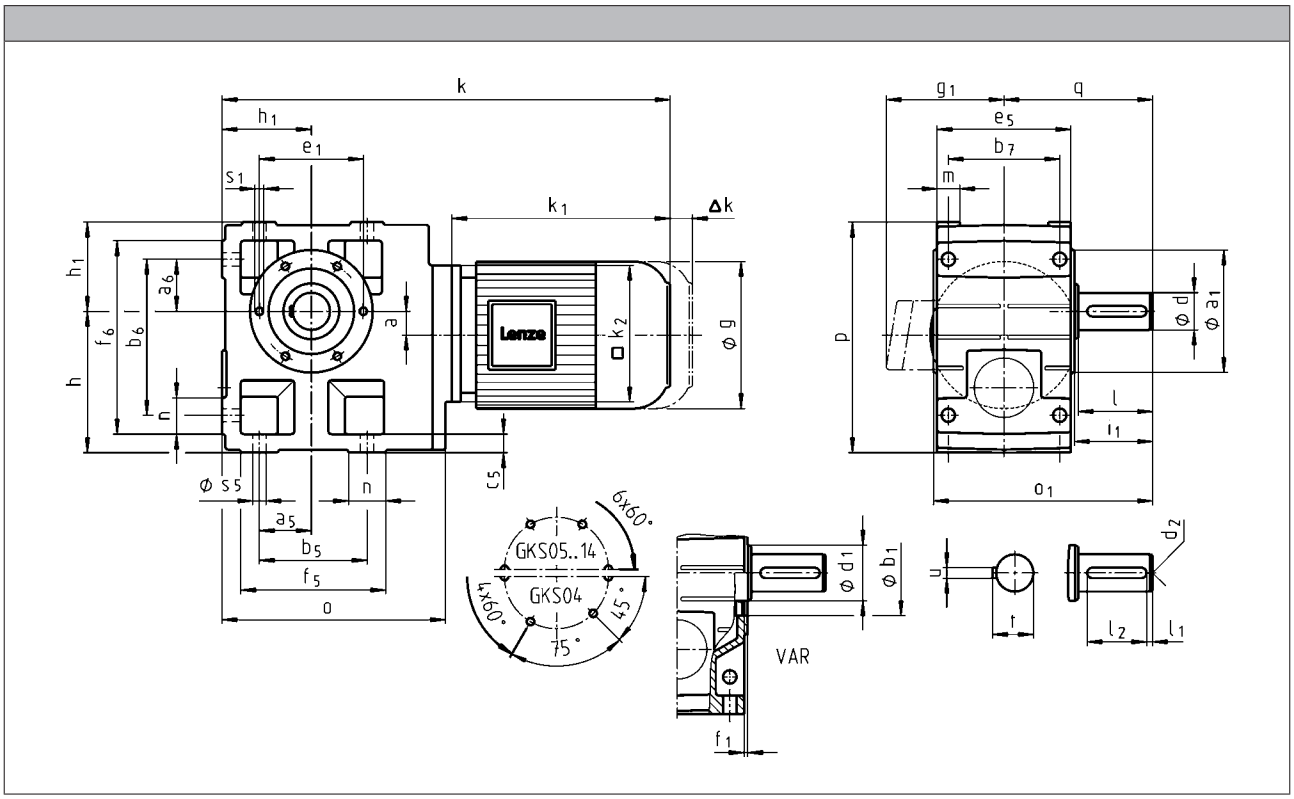

		080C32	090C12	090C32	100C12	100C32	112C22
g		156	176		194		218
g_1	MHEMAXX	150	152	157	166		176
	MHEMABR	132	137		147		158
k_1	MHEMAXX	224.5	274		309	324	363
k_2		145	180				222
Δ k	MHEMABR	73	68		76		90
	MHFMAXX		128		109		102
	MHFMABR	183	181		170		183
		k					
	GKS04	441	501				
	GKS05	461	521		556	571	
	GKS06	517	577		612	627	672
	GKS07	573	633		668	683	728
	GKS09		704		739	754	799
	GKS11				830	845	890
	GKS14						989



		132C12 132C22	160C22	160C32	180C12 180C32	180C42	225C12 225C22
g		258	310		348		447
g_1	MHEMAXX	195	210		230		346
	MHEMABR	187	210		230		346
k_1	MHEMAXX	403	457.5	501.5	561	618	848
k_2		265	300				
Δ k	MHEMABR	109.5	105		113		
	MHFMAXX	115	149			155	213
	MHFMABR	201.5	179		215		213
		k					
GKS06		720					
GKS07		776	835	879			
GKS09		847	906	950	1010		
GKS11		938	997	1041	1101	1158	1388
GKS14		1037	1096	1140	1200	1257	1487

	a	h[1)]	h_1	o	p[1)]	q
GKS04	20	100	71	203	171	107.5
GKS05	23	125	80	232	205	130
GKS06	28	150	100	291	250	160
GKS07	34	190	120	354	310	200
GKS09	41	236	150	429	386	240
GKS11	54	300	185	527	485	305
GKS14	67	375	230	636	605	375

	d	d	d_1	d_2	l	l_1	l_2	u	t	i_1	o_1[1)]	a_1	b_1	e_1	f_1	s_1
	k6	m6											H7			
GKS04	25		45	M10	50	6	40	8	28	52.5	162.5	104	75	90	3	M6x12
GKS05	30		45	M10	60	6	45	8	33	64	196.5	118	80	100	4	M8x15
GKS06	40		65	M16	80	7	63	12	43	85	235.5	140	100	120	4	M10x16
GKS07	50		75	M16	100	8	80	14	53.5	105	295.5	165	115	140	5	M12x18
GKS09		60	95	M20	120	8	100	18	64	125	355.5	205	145	175	6	M16x24
GKS11		80	108	M20	160	15	125	22	85	166	444.5	240	170	205	4	M20x32
GKS14		100	135	M24	200	18	160	28	106	207	543.5	290	170	250	6	M24x35

	a_5	a_6	b_5	b_6	b_7	c_5	e_5	f_5	f_6	m	n	s_5
GKS04	45	45	110	119	85	14	105	132	141	21	22	9
GKS05	47.5	47.5	115	140	105	17	115	144	169	21	29	11
GKS06	60	60	155	170	120	20	145	191	206	23	36	14
GKS07	70	70	190	210	150	25	180	235	255	28	45	18
GKS09	90	90	240	266	185	30	222	300	326	37	60	22
GKS11	105	105	290	325	225	40	270	363	398	43	73	26
GKS14	135	135	360	415	275	50	328	442	497	52	82	33

[1)] k_2 !

Dimensions

GKS□□-3M VAK

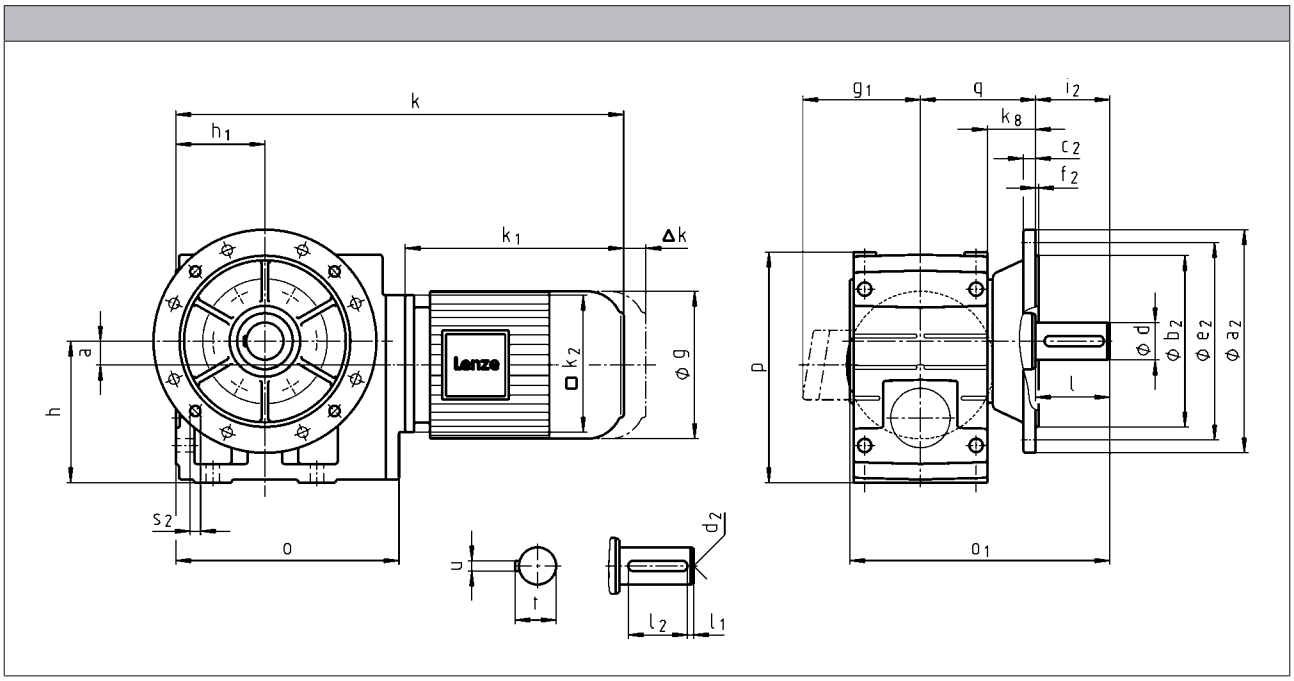



		063C11 063C12 063C31 063C32	063C42	071C11 071C13 071C31 071C32 071C33 071C42	080C13 080C33
g		123		139	156
g_1	MDEMAXX	100		109	150
	MDEMABR	107		118	132
k_1	MDEMAXX	187		207	224.5
k_2		120			145
Δ k	MDEMABR	40		52	73
	MDFMAXX	128			
	MDFMABR	170		165	183
		k			
GKS04		399		419	441
GKS05			419	439	461
GKS06			475	495	517
GKS07					573

	a	h[1)]	h_1	k_8	o	p[1)]	q
GKS04	20	100	71	38.5	203	171	91
GKS05	23	125	80	40	232	205	103.5
GKS06	28	150	100	49	291	250	121.5
GKS07	34	190	120	65.5	354	310	155.5

	d	d_2	l	l_1	l_2	u	t	i_2	o_1[1)]	a_2	b_2	c_2	e_2	f_2	s_2
	k6										j7				
GKS04	25	M10	50	6	40	8	28	50	195.5	160	110	10	130	3.5	4 x 9
GKS05	30	M10	60	6	45	8	33	60	229.5	200	130	12	165	4	4 x 11
GKS06	40	M16	80	7	63	12	43	80	276.5	250	180	15	215	4	4 x 14
GKS07	50	M16	100	8	80	14	53.5	100	350.5	250 300	180 230	15 17	215 265	4 4	4 x 14 4 x 14

[1)] k_2 !



Dimensions

GKS□□-3M VAK

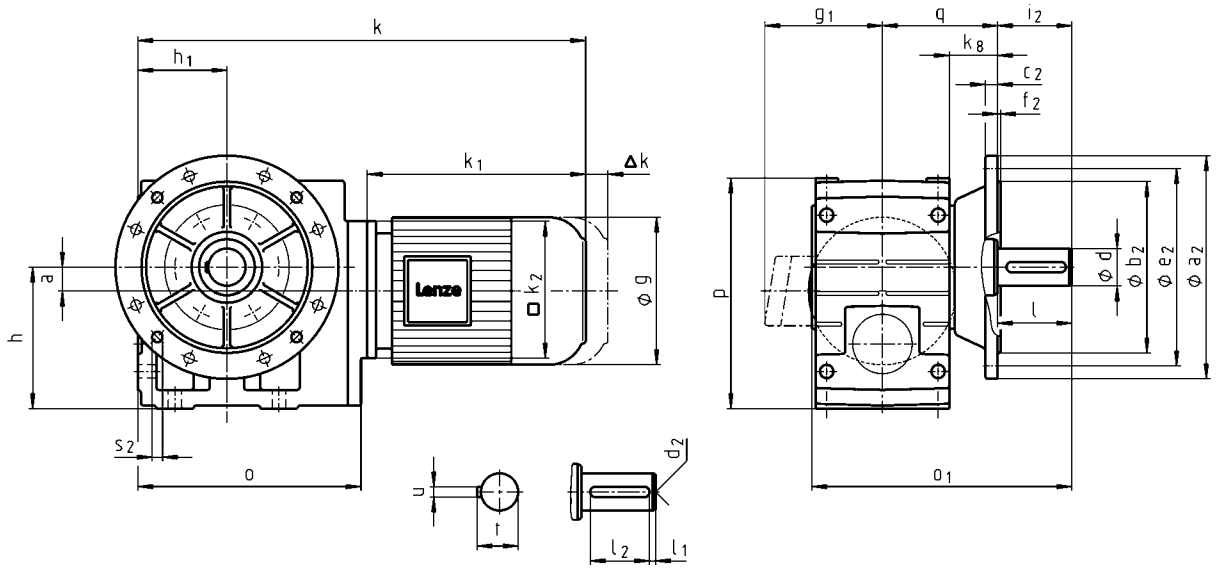

		080C32	090C12	090C32	100C12	100C32	112C22
g		156	176		194		218
g_1	MHEMAXX	150	152	157	166		176
	MHEMABR	132	137		147		158
k_1	MHEMAXX	224.5	274		309	324	363
k_2		145	180				222
Δ k	MHEMABR	73	68		76		90
	MHFMAXX		128		109		102
	MHFMABR	183	181		170		183
		k					
GKS04		441	501				
GKS05		461	521		556	571	
GKS06		517	577		612	627	672
GKS07		573	633		668	683	728
GKS09			704		739	754	799
GKS11					830	845	890
GKS14							989



		132C12 132C22	160C22	160C32	180C12 180C32	180C42	225C12 225C22
g		258	310		348		447
g_1	MHEMAXX	195	210		230		346
	MHEMABR	187	210		230		346
k_1	MHEMAXX	403	457.5	501.5	561	618	848
k_2		265	300				
Δ k	MHEMABR	109.5	105		113		
	MHFMAXX	115	149			155	213
	MHFMABR	201.5	179		215		213
		k					
GKS06		720					
GKS07		776	835	879			
GKS09		847	906	950	1010		
GKS11		938	997	1041	1101	1158	1388
GKS14		1037	1096	1140	1200	1257	1487

	a	h[1)]	h_1	k_8	o	p[1)]	q
GKS04	20	100	71	38.5	203	171	91
GKS05	23	125	80	40	232	205	103.5
GKS06	28	150	100	49	291	250	121.5
GKS07	34	190	120	65.5	354	310	155.5
GKS09	41	236	150	69.5	429	386	180.5
GKS11	54	300	185	70.5	527	485	205.5
GKS14	67	375	230	71.5	636	605	235.5

	d k6	d m6	d_2	l	l_1	l_2	u	t	i_2	o_1[1)]	a_2	b_2 j7	c_2	e_2	f_2	s_2
GKS04	25		M10	50	6	40	8	28	50	195.5	160	110	10	130	3.5	4 x 9
GKS05	30		M10	60	6	45	8	33	60	229.5	200	130	12	165	4	4 x 11
GKS06	40		M16	80	7	63	12	43	80	276.5	250	180	15	215	4	4 x 14
GKS07	50		M16	100	8	80	14	53.5	100	350.5	250 300	180 230	15 17	215 265	4 4	4 x 14 4 x 14
GKS09		60	M20	120	8	100	18	64	120	415.5	350	250	18	300	4	4 x 17.5
GKS11		80	M20	160	15	125	22	85	160	504.5	400 450	300 350	20 22	350 400	5 5	4 x 17.5 8 x 17.5
GKS14		100	M24	200	18	160	28	106	200	603.5	450	350	22	400	5	8 x 17.5

[1)] k_2 !



Dimensions

GKS□□-4M H□R

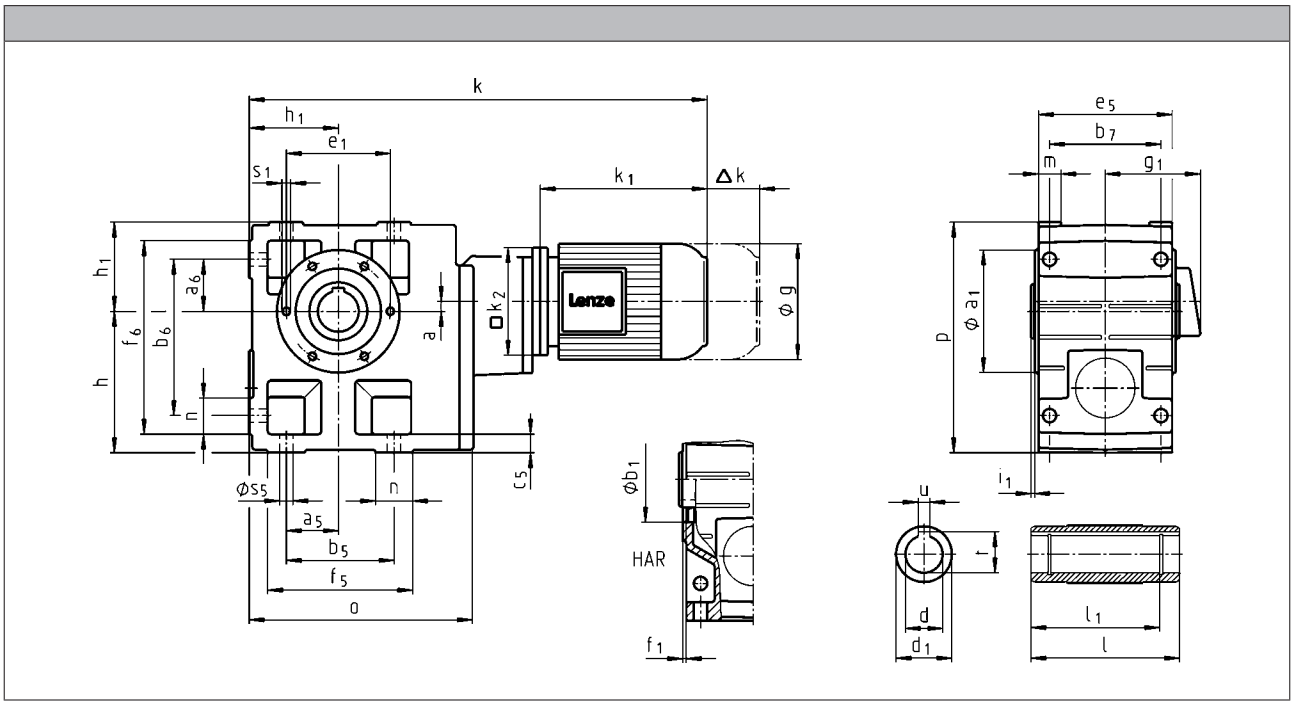



		063C11 063C12 063C31 063C32	063C42	071C11 071C13 071C31 071C32 071C33	071C42	080C13 080C33
g		123		139		156
g_1	MDEMAXX	100		109		150
	MDEMABR	107		118		132
k_1	MDEMAXX	187		207		224.5
k_2		120				145
Δ k	MDEMABR	40		52		73
	MDFMAXX	128				
	MDFMABR	170		165		183
		k				
GKS05		495		515		
GKS06		568		588		611
GKS07			635	655		678
GKS09			724	744		767
GKS11						877

	a	h	h_1	o	p
GKS05	13	125	80	226	205
GKS06	8	150	100	288	250
GKS07	11	190	120	350.5	310
GKS09	15	236	150	426	386
GKS11	16	300	185	523	485

	d H7	d_1	l	l_1	u JS9	t +0,2	i_1	a_1	b_1 H7	e_1	f_1	s_1
GKS05	30 35	50 50	140 140	124 124	8 10	33.3 38.3	4 4	118	80	100	4	M8x15
GKS06	40 45	65 65	160 160	140 140	12 14	43.3 48.8	5 5	140	100	120	4	M10x16
GKS07	50 55	75 75	200 200	175 175	14 16	53.8 59.3	5 5	165	115	140	5	M12x18
GKS09	60 70	95 95	240 240	210 210	18 20	64.4 74.9	5 5	205	145	175	6	M16x24
GKS11	70 80	108 108	290 290	250 250	20 22	74.9 85.4	6 6	240	170	205	4	M20x32

	a_5	a_6	b_5	b_6	b_7	c_5	e_5	f_5	f_6	m	n	s_5
GKS05	47.5	47.5	115	140	105	17	115	144	169	21	29	11
GKS06	60	60	155	170	120	20	145	191	206	23	36	14
GKS07	70	70	190	210	150	25	180	235	255	28	45	18
GKS09	90	90	240	266	185	30	222	300	326	37	60	22
GKS11	105	105	290	325	225	40	270	363	398	43	73	26



Dimensions

GKS□□-4M H□R

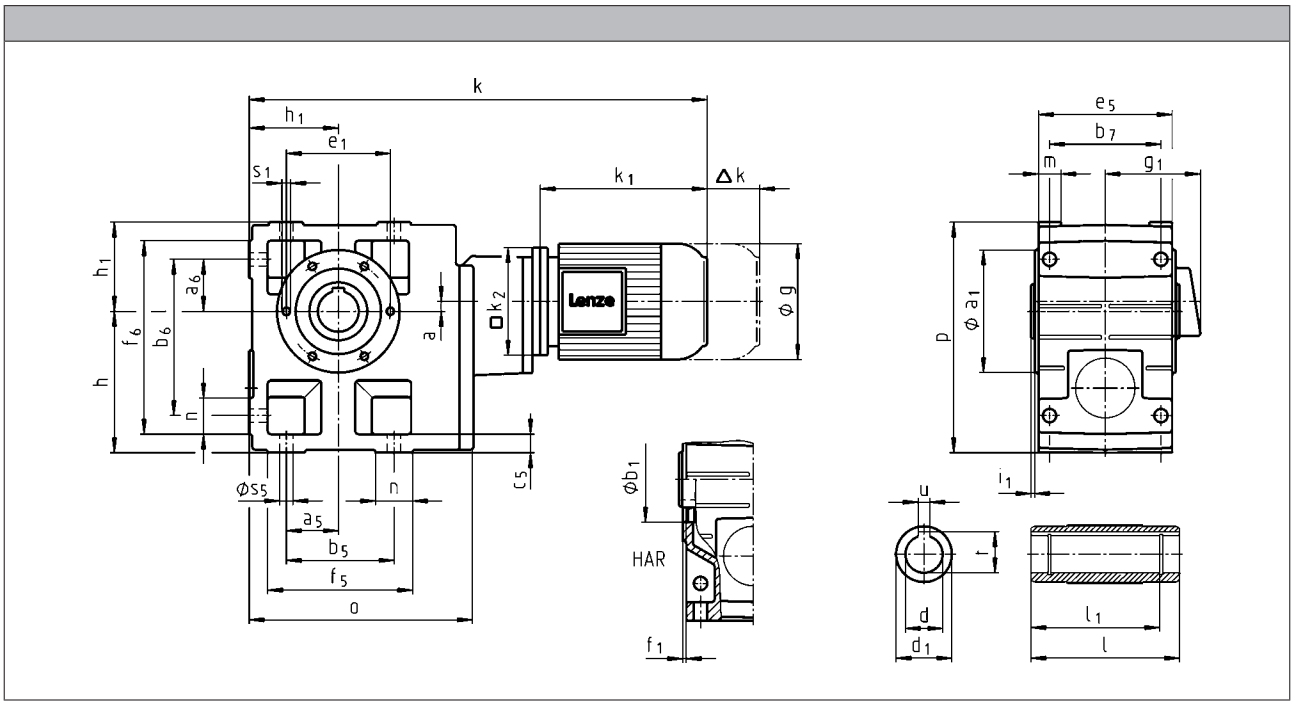

		080C32	090C12	090C32	100C12	100C32
g		156	176		194	
g_1	MHEMAXX	150	152	157	166	
	MHEMABR	132	137		147	
k_1	MHEMAXX	224.5	274		309	324
k_2		145	180			
Δ k	MHEMABR	73	68		76	
	MHFMAXX	128			109	
	MHFMABR	183	181		170	
		k				
GKS06		611	670			
GKS07		678	737		772	
GKS09		767	826		861	876
GKS11		877	936		971	986
GKS14			1069		1104	1119



		112C22	132C12 132C22	160C22	160C32	180C12
g		218	258	310		348
g_1	MHEMAXX	176	195	210		230
	MHEMABR	158	187	210		230
k_1	MHEMAXX	363	403	457.5	501.5	561
k_2		222	265	300		
Δ k	MHEMABR	90	109.5	105		113
	MHFMAXX	102	115	149		
	MHFMABR	183	201.5	179		215
		k				
GKS09		921				
GKS11		1031	1079			
GKS14		1164	1212	1272	1316	1375

	a	h	h_1	o	p
GKS06	8	150	100	288	250
GKS07	11	190	120	350.5	310
GKS09	15	236	150	426	386
GKS11	16	300	185	523	485
GKS14	22	375	230	632	605

	d	d_1	l	l_1	u	t	i_1	a_1	b_1	e_1	f_1	s_1
	H7				JS9	+0,2			H7			
GKS06	40 45	65 65	160 160	140 140	12 14	43.3 48.8	5 5	140	100	120	4	M10x16
GKS07	50 55	75 75	200 200	175 175	14 16	53.8 59.3	5 5	165	115	140	5	M12x18
GKS09	60 70	95 95	240 240	210 210	18 20	64.4 74.9	5 5	205	145	175	6	M16x24
GKS11	70 80	108 108	290 290	250 250	20 22	74.9 85.4	6 6	240	170	205	4	M20x32
GKS14	100	135	350	305	28	106.4	7	290	170	250	6	M24x35

	a_5	a_6	b_5	b_6	b_7	c_5	e_5	f_5	f_6	m	n	s_5
GKS06	60	60	155	170	120	20	145	191	206	23	36	14
GKS07	70	70	190	210	150	25	180	235	255	28	45	18
GKS09	90	90	240	266	185	30	222	300	326	37	60	22
GKS11	105	105	290	325	225	40	270	363	398	43	73	26
GKS14	135	135	360	415	275	50	328	442	497	52	82	33



Dimensions

GKS□□-4M HAK

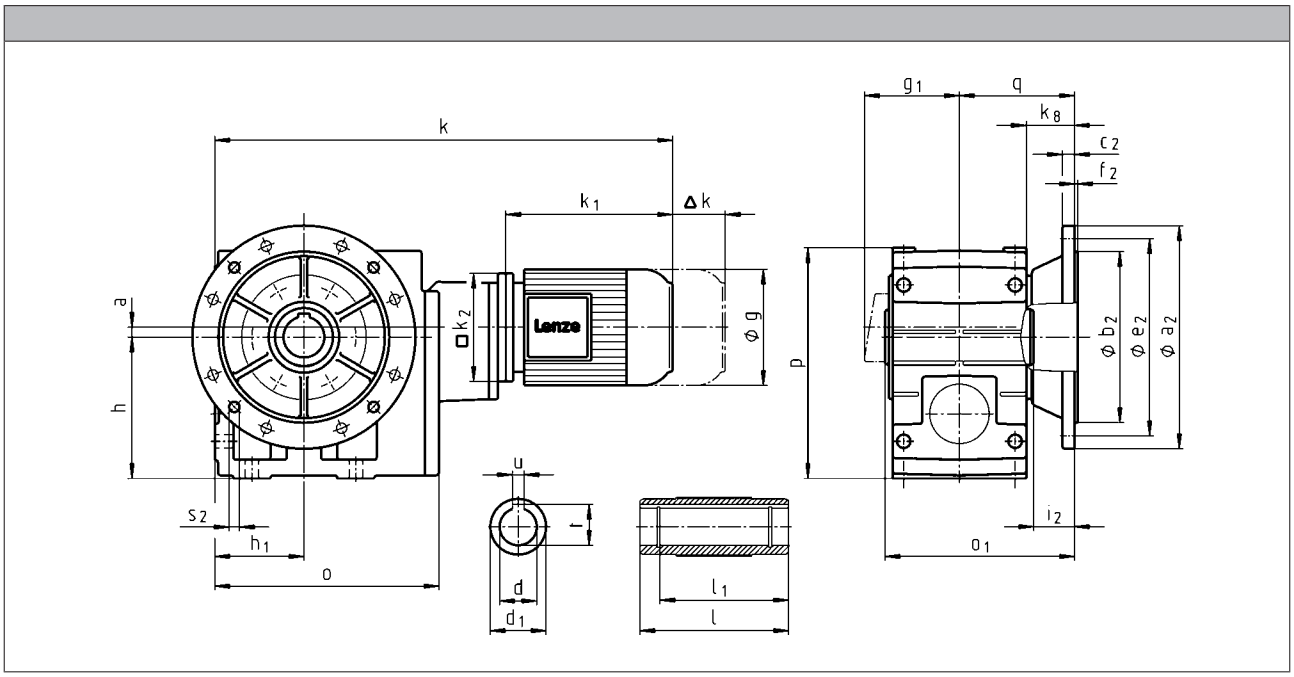



		063C11 063C12 063C31 063C32	063C42	071C11 071C13 071C31 071C32 071C33	071C42	080C13 080C33
g		123		139		156
g_1	MDEMAXX	100		109		150
	MDEMABR	107		118		132
k_1	MDEMAXX	187		207		224.5
k_2		120				145
Δ k	MDEMABR	40		52		73
	MDFMAXX	128				
	MDFMABR	170		165		183
		k				
GKS05		495		515		
GKS06		568		588		611
GKS07			635	655		678
GKS09			724	744		767
GKS11						877

	a	h	h_1	k_8	o	p	q
GKS05	13	125	80	40	226	205	103.5
GKS06	8	150	100	49	288	250	121.5
GKS07	11	190	120	65.5	350.5	310	155.5
GKS09	15	236	150	69.5	426	386	180.5
GKS11	16	300	185	70.5	523	485	205.5

	d	d_1	l	l_1	u	t	i_2	o_1	a_2	b_2	c_2	e_2	f_2	s_2
	H7				JS9	+0,2				j7				
GKS05	30 35	50 50	140 140	124 124	8 10	33.3 38.3	33 33	173.5 173.5	200	130	12	165	4	4 x 11
GKS06	40 45	65 65	160 160	140 140	12 14	43.3 48.8	42 41	201.5 201.5	200 250	180 130	12 15	165 215	3.5 4	4 x 11 4 x 14
GKS07	50 55	75 75	200 200	175 175	14 16	53.8 59.3	55 55	255.5 255.5	250 300	180 230	15 17	215 265	4 4	4 x 14 4 x 14
GKS09	60 70	95 95	240 240	210 210	18 20	64.4 74.9	60 60	300.5 300.5	350	250	18	300	4	4 x 17.5
GKS11	70 80	108 108	290 290	250 250	20 22	74.9 85.4	60 60	350.5 350.5	400 450	300 350	20 22	350 400	5 5	4 x 17.5 8 x 17.5



Dimensions

GKS□□-4M HAK

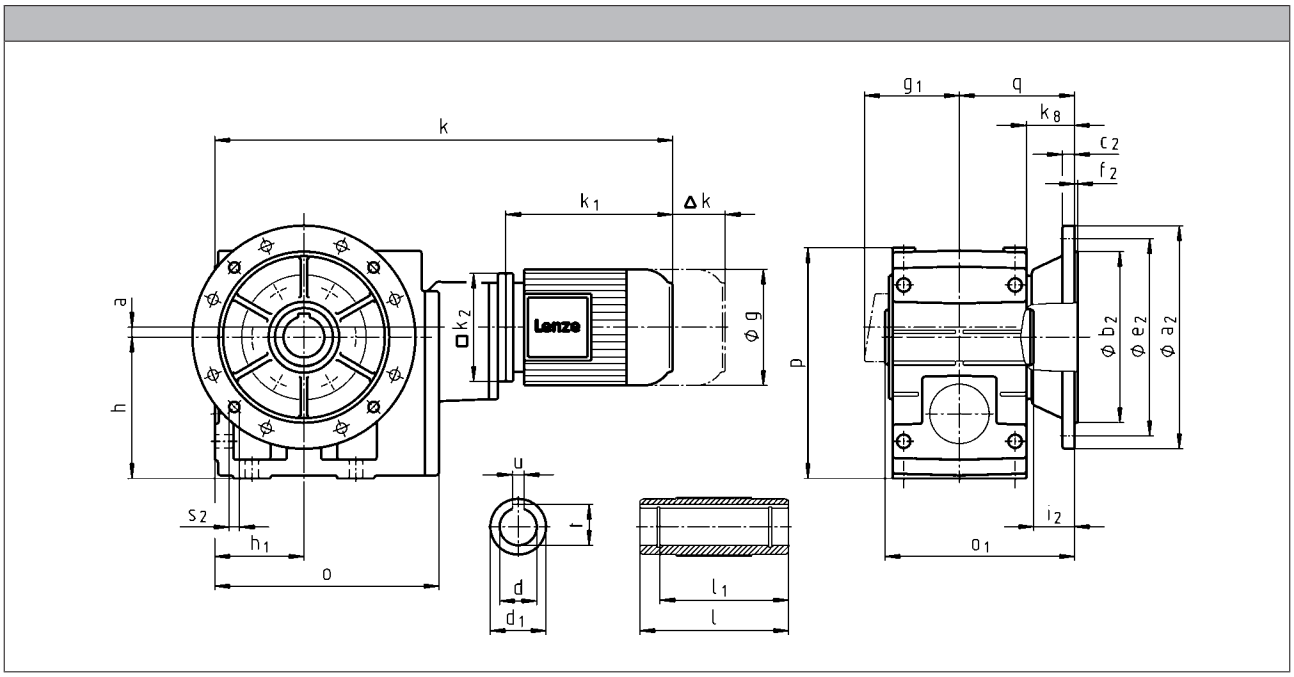

		080C32	090C12	090C32	100C12	100C32
g		156	176		194	
g_1	MHEMAXX	150	152	157	166	
	MHEMABR	132	137		147	
k_1	MHEMAXX	224.5	274		309	324
k_2		145	180			
Δ k	MHEMABR	73	68		76	
	MHFMAXX	128			109	
	MHFMABR	183	181		170	
		k				
GKS06		611	670			
GKS07		678	737		772	
GKS09		767	826		861	876
GKS11		877	936		971	986
GKS14			1069		1104	1119



		112C22	132C12 132C22	160C22	160C32	180C12
g		218	258	310		348
g_1	MHEMAXX	176	195	210		230
	MHEMABR	158	187	210		230
k_1	MHEMAXX	363	403	457.5	501.5	561
k_2		222	265	300		
Δ k	MHEMABR	90	109.5	105		113
	MHFMAXX	102	115	149		
	MHFMABR	183	201.5	179		215
		k				
	GKS09	921				
	GKS11	1031	1079			
	GKS14	1164	1212	1272	1316	1375

	a	h	h_1	k_8	o	p	q
GKS06	8	150	100	49	288	250	121.5
GKS07	11	190	120	65.5	350.5	310	155.5
GKS09	15	236	150	69.5	426	386	180.5
GKS11	16	300	185	70.5	523	485	205.5
GKS14	22	375	230	71.5	632	605	235.5

	d	d_1	l	l_1	u	t	i_2	o_1	a_2	b_2	c_2	e_2	f_2	s_2
	H7				JS9	+0,2				j7				
GKS06	40 45	65 65	160 160	140 140	12 14	43.3 48.8	42 41	201.5 201.5	200 250	180 130	12 15	165 215	3.5 4	4 x 11 4 x 14
GKS07	50 55	75 75	200 200	175 175	14 16	53.8 59.3	55 55	255.5 255.5	250 300	180 230	15 17	215 265	4 4	4 x 14 4 x 14
GKS09	60 70	95 95	240 240	210 210	18 20	64.4 74.9	60 60	300.5 300.5	350	250	18	300	4	4 x 17.5
GKS11	70 80	108 108	290 290	250 250	20 22	74.9 85.4	60 60	350.5 350.5	400 450	300 350	20 22	350 400	5 5	4 x 17.5 8 x 17.5
GKS14	100	135	350	305	28	106.4	60	410.5	450	350	22	400	5	8 x 17.5



Dimensions

GKS□□-4M V□R

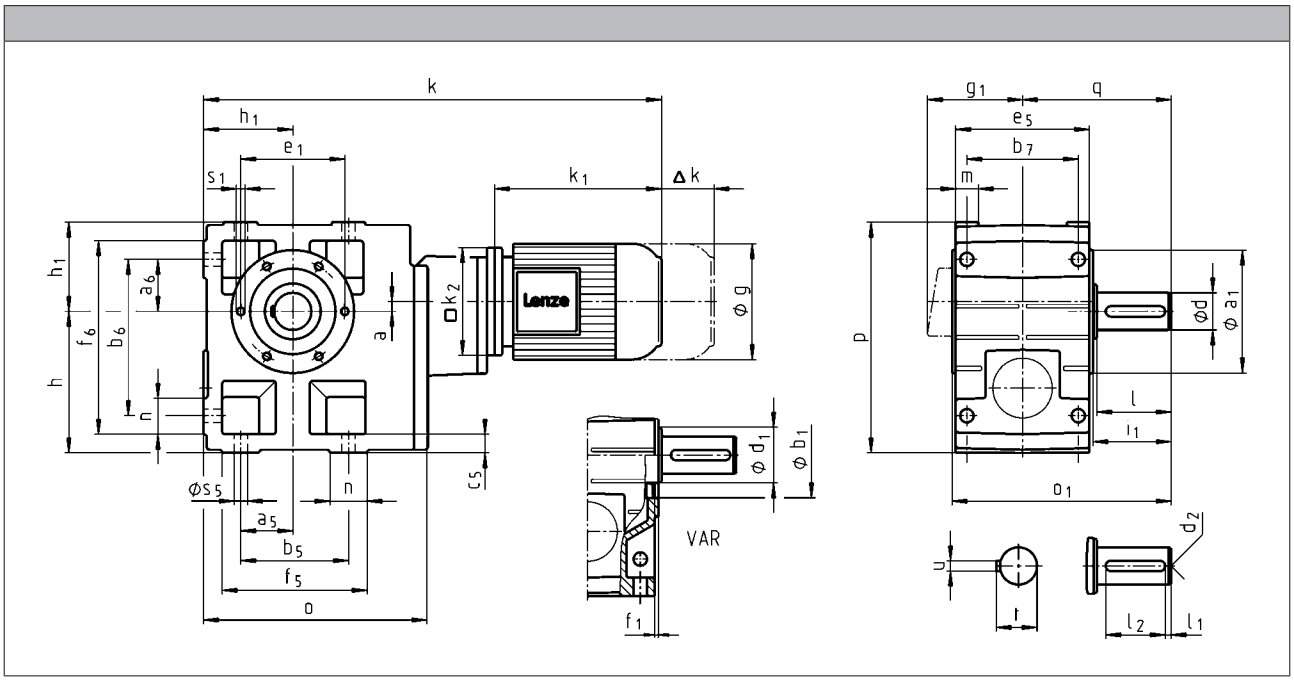



		063C11 063C12 063C31 063C32	063C42	071C11 071C13 071C31 071C32 071C33	071C42	080C13 080C33
g		123		139		156
g_1	MDEMAXX	100		109		150
	MDEMABR	107		118		132
k_1	MDEMAXX	187		207		224.5
k_2		120				145
Δ k	MDEMABR	40		52		73
	MDFMAXX	128				
	MDFMABR	170		165		183
		k				
GKS05		495		515		
GKS06		568		588		611
GKS07			635	655		678
GKS09			724	744		767
GKS11						877

	a	h	h_1	o	p	q
GKS05	13	125	80	226	205	130
GKS06	8	150	100	288	250	160
GKS07	11	190	120	350.5	310	200
GKS09	15	236	150	426	386	240
GKS11	16	300	185	523	485	305

	d	d	d_1	d_2	l	l_1	l_2	u	t	i_1	o_1	a_1	b_1	e_1	f_1	s_1
	k6	m6											H7			
GKS05	30		45	M10	60	6	45	8	33	64	196.5	118	80	100	4	M8x15
GKS06	40		65	M16	80	7	63	12	43	85	235.5	140	100	120	4	M10x16
GKS07	50		75	M16	100	8	80	14	53.5	105	295.5	165	115	140	5	M12x18
GKS09		60	95	M20	120	8	100	18	64	125	355.5	205	145	175	6	M16x24
GKS11		80	108	M20	160	15	125	22	85	166	444.5	240	170	205	4	M20x32

	a_5	a_6	b_5	b_6	b_7	c_5	e_5	f_5	f_6	m	n	s_5
GKS05	47.5	47.5	115	140	105	17	115	144	169	21	29	11
GKS06	60	60	155	170	120	20	145	191	206	23	36	14
GKS07	70	70	190	210	150	25	180	235	255	28	45	18
GKS09	90	90	240	266	185	30	222	300	326	37	60	22
GKS11	105	105	290	325	225	40	270	363	398	43	73	26



Dimensions

GKS□□-4M V□R

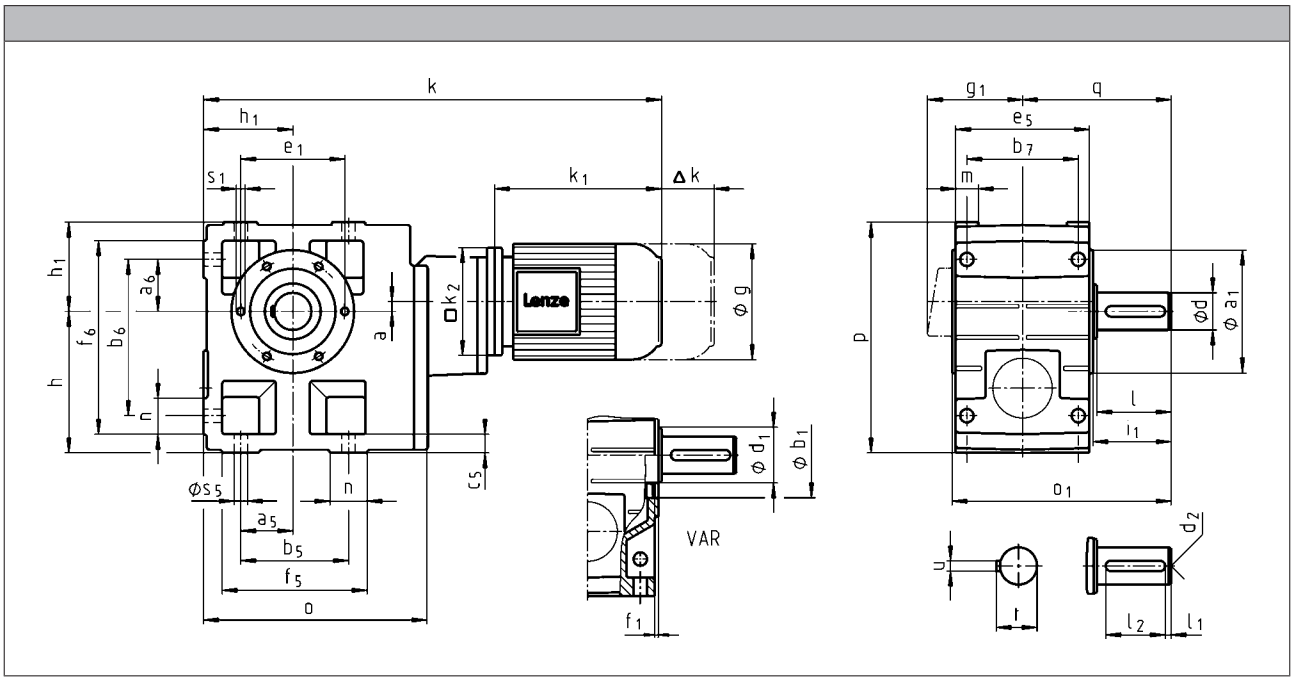

		080C32	090C12	090C32	100C12	100C32
g		156	176		194	
g_1	MHEMAXX	150	152	157	166	
	MHEMABR	132	137		147	
k_1	MHEMAXX	224.5	274		309	324
k_2		145	180			
Δ k	MHEMABR	73	68		76	
	MHFMAXX	128			109	
	MHFMABR	183	181		170	
		k				
GKS06		611	670			
GKS07		678	737		772	
GKS09		767	826		861	876
GKS11		877	936		971	986
GKS14			1069		1104	1119



		112C22	132C12 132C22	160C22	160C32	180C12
g		218	258	310		348
g_1	MHEMAXX	176	195	210		230
	MHEMABR	158	187	210		230
k_1	MHEMAXX	363	403	457.5	501.5	561
k_2		222	265	300		
Δ k	MHEMABR	90	109.5	105		113
	MHFMAXX	102	115	149		
	MHFMABR	183	201.5	179		215
		k				
	GKS09	921				
	GKS11	1031	1079			
	GKS14	1164	1212	1272	1316	1375

	a	h	h_1	o	p	q
GKS06	8	150	100	288	250	160
GKS07	11	190	120	350.5	310	200
GKS09	15	236	150	426	386	240
GKS11	16	300	185	523	485	305
GKS14	22	375	230	632	605	375

	d	d	d_1	d_2	l	l_1	l_2	u	t	i_1	o_1	a_1	b_1	e_1	f_1	s_1
	k6	m6											H7			
GKS06	40		65	M16	80	7	63	12	43	85	235.5	140	100	120	4	M10x16
GKS07	50		75	M16	100	8	80	14	53.5	105	295.5	165	115	140	5	M12x18
GKS09		60	95	M20	120	8	100	18	64	125	355.5	205	145	175	6	M16x24
GKS11		80	108	M20	160	15	125	22	85	166	444.5	240	170	205	4	M20x32
GKS14		100	135	M24	200	18	160	28	106	207	543.5	290	170	250	6	M24x35

	a_5	a_6	b_5	b_6	b_7	c_5	e_5	f_5	f_6	m	n	s_5
GKS06	60	60	155	170	120	20	145	191	206	23	36	14
GKS07	70	70	190	210	150	25	180	235	255	28	45	18
GKS09	90	90	240	266	185	30	222	300	326	37	60	22
GKS11	105	105	290	325	225	40	270	363	398	43	73	26
GKS14	135	135	360	415	275	50	328	442	497	52	82	33



Dimensions

GKS□□-4M VAK

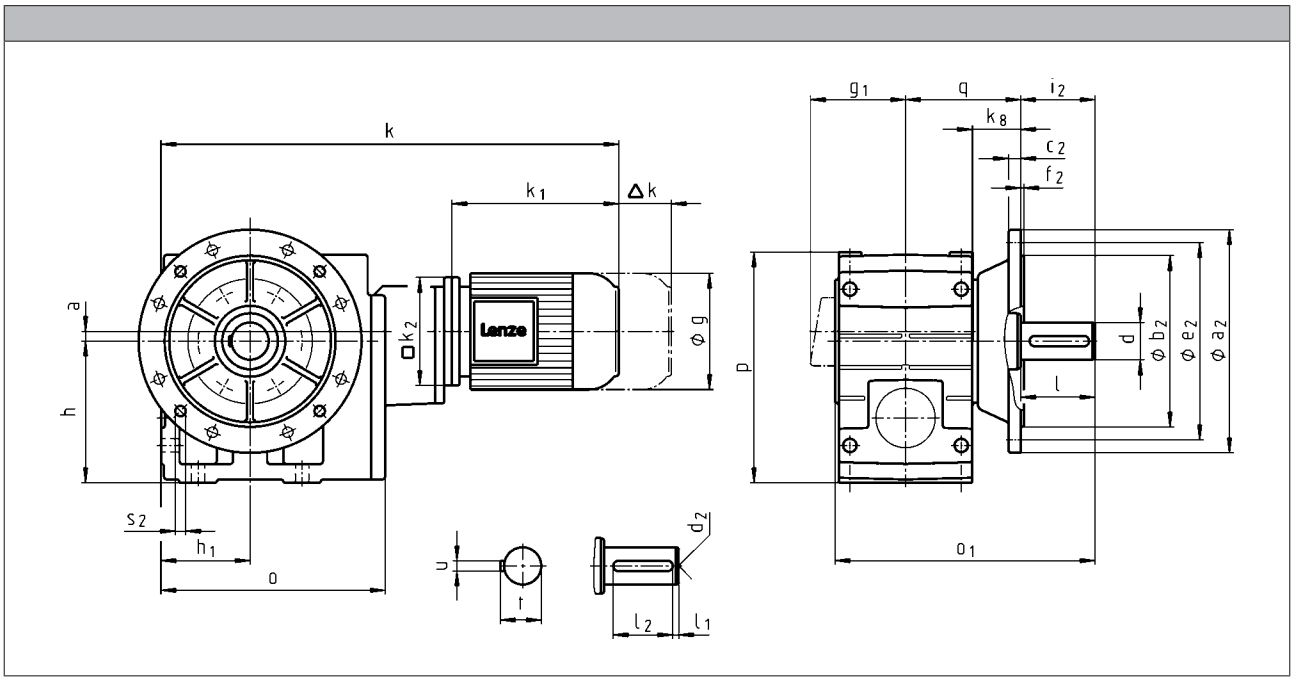



		063C11 063C12 063C31 063C32	063C42	071C11 071C13 071C31 071C32 071C33	071C42	080C13 080C33
g		123		139		156
g_1	MDEMAXX	100		109		150
	MDEMABR	107		118		132
k_1	MDEMAXX	187		207		224.5
k_2		120				145
Δ k	MDEMABR	40		52		73
	MDFMAXX	128				
	MDFMABR	170		165		183
		k				
GKS05		495		515		
GKS06		568		588		611
GKS07			635	655		678
GKS09			724	744		767
GKS11						877

	a	h	h_1	k_8	o	p	q
GKS05	13	125	80	40	226	205	103.5
GKS06	8	150	100	49	288	250	121.5
GKS07	11	190	120	65.5	350.5	310	155.5
GKS09	15	236	150	69.5	426	386	180.5
GKS11	16	300	185	70.5	523	485	205.5

	d	d	d_2	l	l_1	l_2	u	t	i_2	o_1	a_2	b_2	c_2	e_2	f_2	s_2
	k6	m6										j7				
GKS05	30		M10	60	6	45	8	33	60	229.5	200	130	12	165	4	4 x 11
GKS06	40		M16	80	7	63	12	43	80	276.5	250	180	15	215	4	4 x 14
GKS07	50		M16	100	8	80	14	53.5	100	350.5	250 300	180 230	15 17	215 265	4 4	4 x 14 4 x 14
GKS09		60	M20	120	8	100	18	64	120	415.5	350	250	18	300	4	4 x 17.5
GKS11		80	M20	160	15	125	22	85	160	504.5	400 450	300 350	20 22	350 400	5 5	4 x 17.5 8 x 17.5



Dimensions

GKS□□-4M VAK

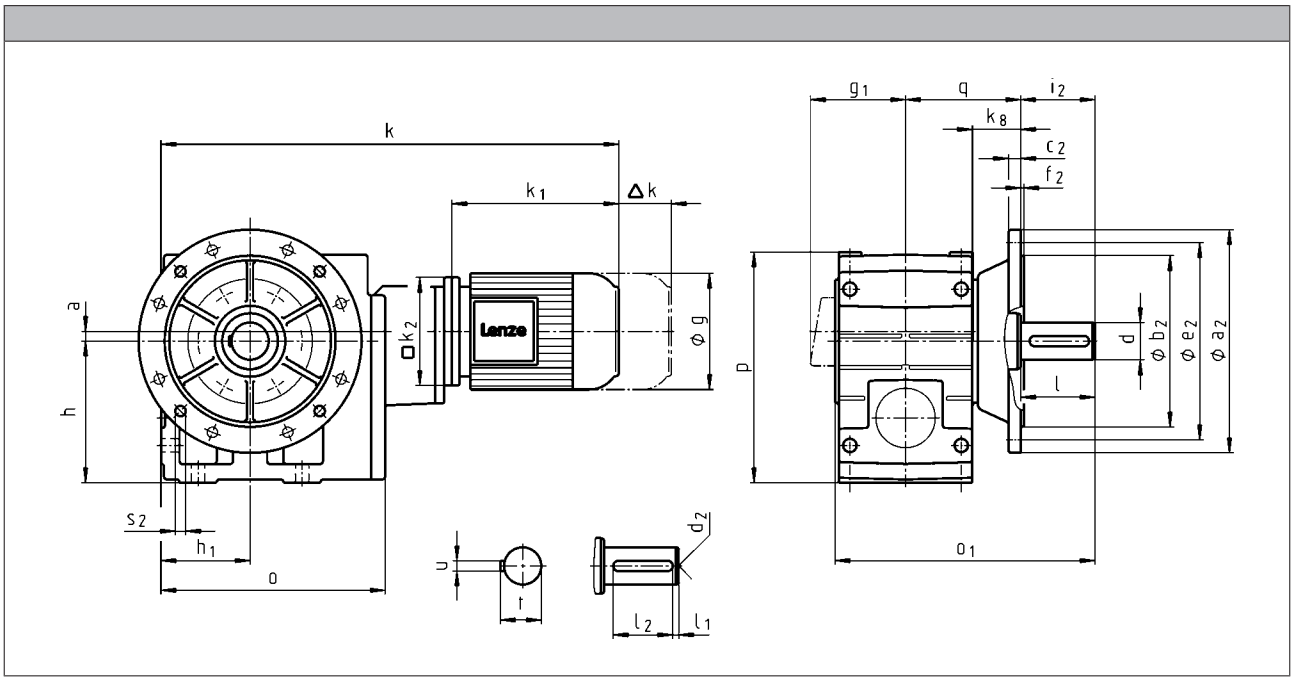

		080C32	090C12	090C32	100C12	100C32
g		156	176		194	
g_1	MHEMAXX	150	152	157	166	
	MHEMABR	132	137		147	
k_1	MHEMAXX	224.5	274		309	324
k_2		145	180			
Δ k	MHEMABR	73	68		76	
	MHFMAXX	128			109	
	MHFMABR	183	181		170	
		k				
GKS06		611	670			
GKS07		678	737		772	
GKS09		767	826		861	876
GKS11		877	936		971	986
GKS14			1069		1104	1119



		112C22	132C12 132C22	160C22	160C32	180C12
g		218	258	310		348
g_1	MHEMAXX	176	195	210		230
	MHEMABR	158	187	210		230
k_1	MHEMAXX	363	403	457.5	501.5	561
k_2		222	265	300		
Δ k	MHEMABR	90	109.5	105		113
	MHFMAXX	102	115	149		
	MHFMABR	183	201.5	179		215
		k				
	GKS09	921				
	GKS11	1031	1079			
	GKS14	1164	1212	1272	1316	1375

	a	h	h_1	k_8	o	p	q
GKS06	8	150	100	49	288	250	121.5
GKS07	11	190	120	65.5	350.5	310	155.5
GKS09	15	236	150	69.5	426	386	180.5
GKS11	16	300	185	70.5	523	485	205.5
GKS14	22	375	230	71.5	632	605	235.5

	d	d	d_2	l	l_1	l_2	u	t	i_2	o_1	a_2	b_2	c_2	e_2	f_2	s_2
	k6	m6										j7				
GKS06	40		M16	80	7	63	12	43	80	276.5	250	180	15	215	4	4 x 14
GKS07	50		M16	100	8	80	14	53.5	100	350.5	250 300	180 230	15 17	215 265	4 4	4 x 14 4 x 14
GKS09		60	M20	120	8	100	18	64	120	415.5	350	250	18	300	4	4 x 17.5
GKS11		80	M20	160	15	125	22	85	160	504.5	400 450	300 350	20 22	350 400	5 5	4 x 17.5 8 x 17.5
GKS14		100	M24	200	18	160	28	106	200	603.5	450	350	22	400	5	8 x 17.5





Hollow shaft with shrink disc

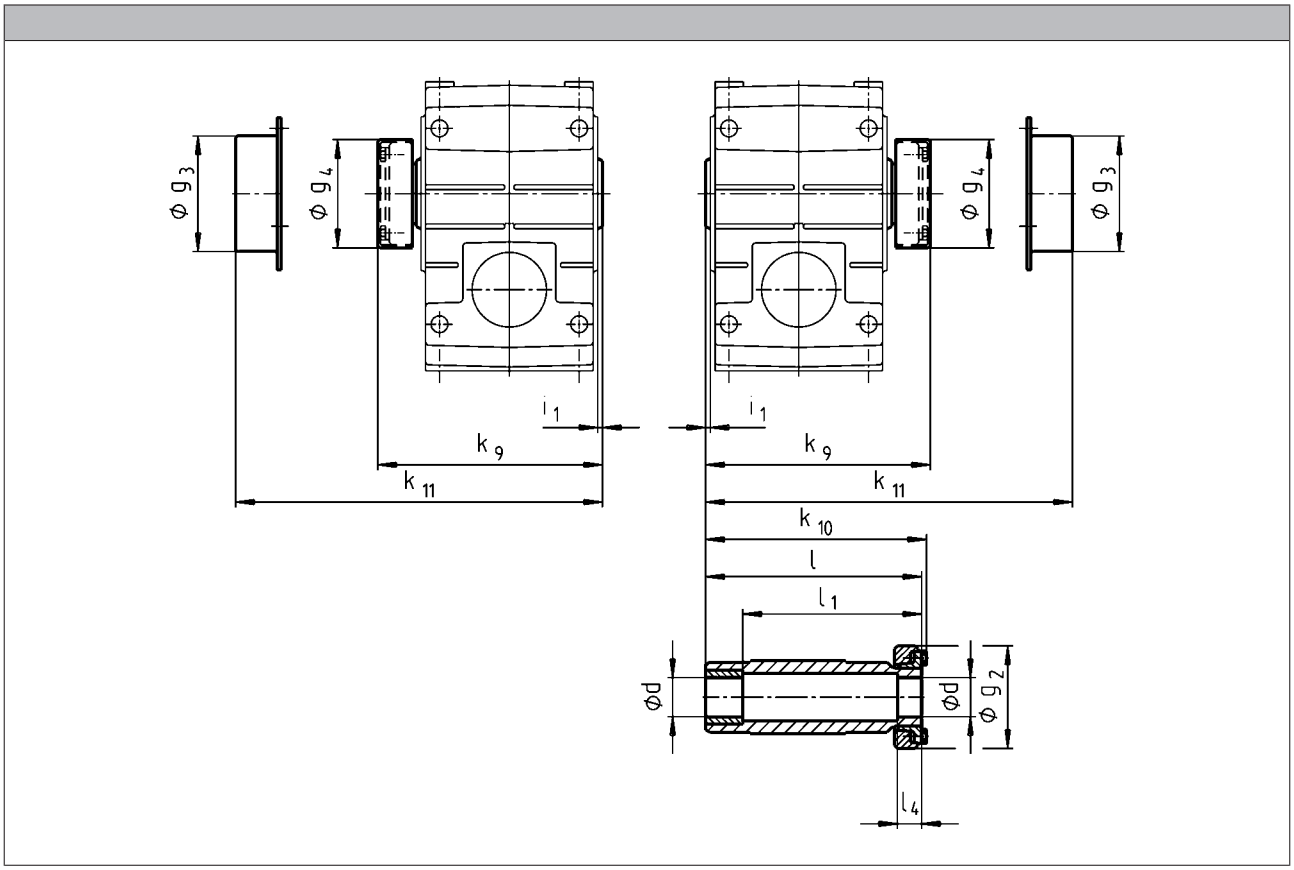

	d	g_2	g_3	g_4	i_1	k_9	k_{10}	k_{11}	l	l_1	l_4
	h6										
GKS04	25 30	72	79	76	2.5	150	148	154	142	122	26
GKS05	35	80	90	84	4.0	176	174	179	168	148	28
GKS06	40	90	100	94		202	200	204	194	164	30
GKS07	50	110	124	116	5.0	241	238	244	232	192	26
GKS09	65	141	159	147		288	285	287	278	228	30
GKS11	80	170	191	176	6.0	347	344	349	338	238	42
GKS14	100	215	253	221	7.0	418	415	421	407	307	55

- ► Output flange and hollow shaft with shrink disc (output version SAK) are not possible in the same location. For additional dimensions see output version H□□.
- ► Ensure that the strength of the machine shaft material is adequate in shrink disc designs.
  When using typical steels, e.g. C45, 42CrMo4, the torques listed in the selection tables can be used without restriction.
  Please consult us if you wish to use material that is considerably weaker. Medium surface roughness Rz must not exceed 15 µm (turning is sufficient).



Mounting set for hollow shaft circlip:
Proposed design for auxiliary tools

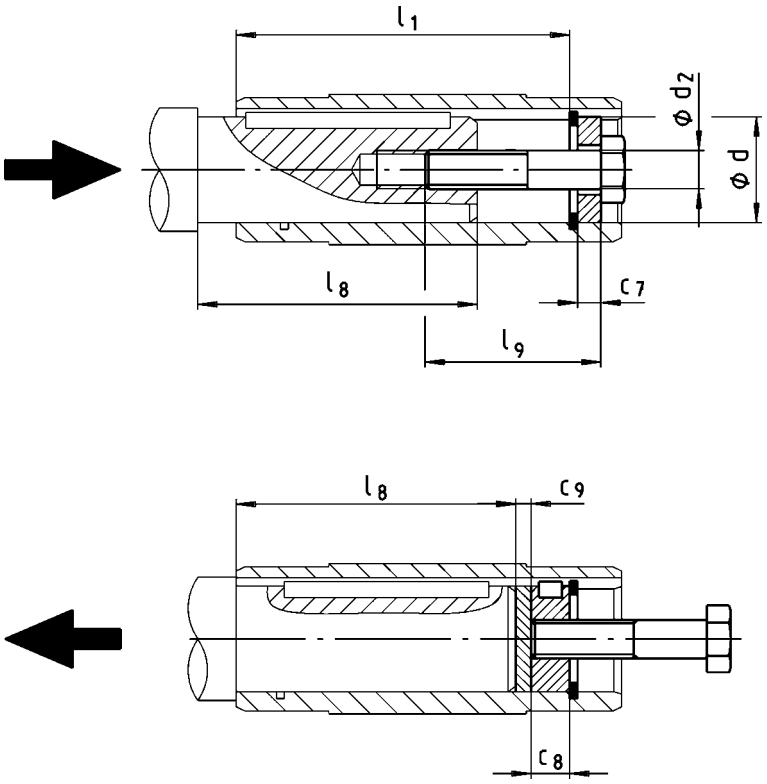

	d	l_1	d_2	l_9	c_7	c_8	c_9	$l_{8,\,max}$
	H7							
GKS04	25 30	100	M10	40	5	10	3	85
					6			
GKS05	30 35	124						107
			M12	50	7	12		
GKS06	40 45	140	M16	60	8	16	4	118
					9			
GKS07	50 55	175			10		5	148
			M20	80	11	20		
GKS09	60 70	210			13			182
					14			
GKS11	70 80	250					6	221
					16			
GKS14	100	305	M24	100	20	24	8	270

6.9



Hoseproof hollow shaft cover

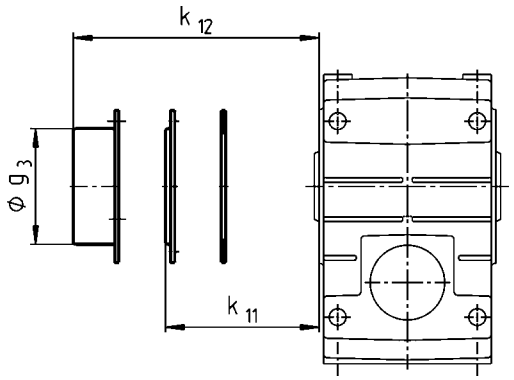

► Cover including gasket

	k_{11}	k_{12}	g_3
GKS04	9		
GKS05	10		
GKS06	11		
GKS07			
GKS09		54	159
GKS11		67	191
GKS14		80	253



Gearboxes with 2nd output shaft end

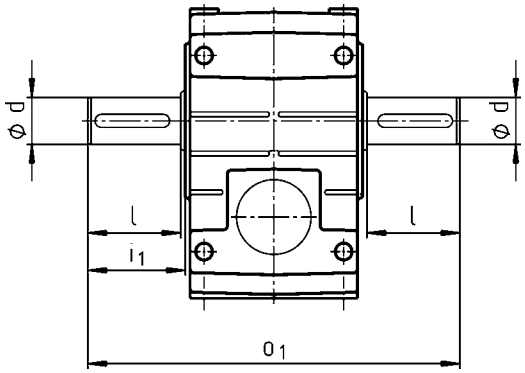

	d	d	l	i_1	o_1
	k6	m6			
GKS04	25		50	52.5	215
GKS05	30		60	64.0	260
GKS06	40		80	85.0	320
GKS07	50		100	105.0	400
GKS09		60	120	125.0	480
GKS11		80	160	166.0	610
GKS14		100	200	207.0	750

Torque plate on threaded pitch circle

In position 3

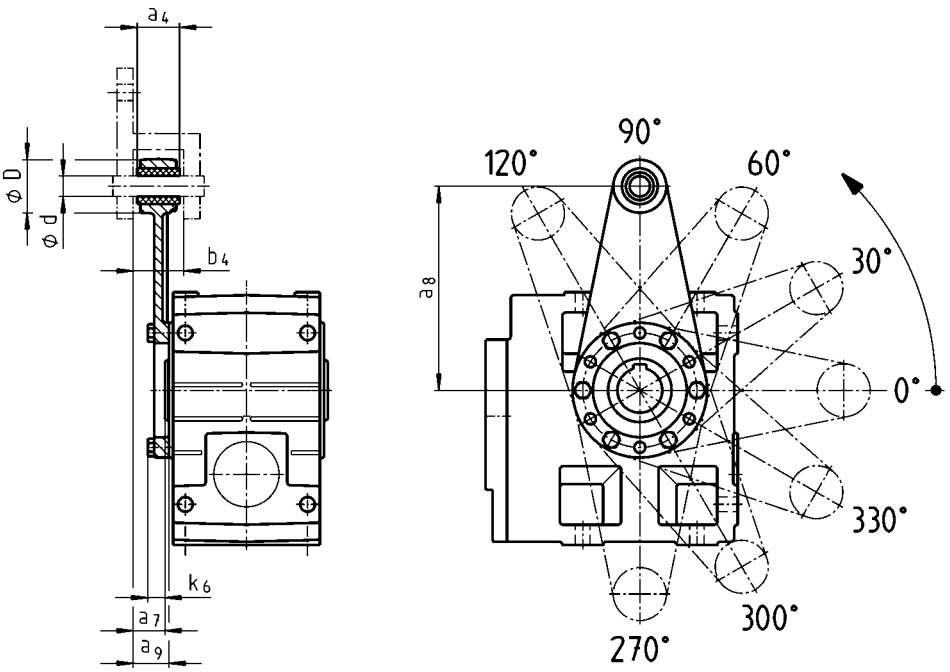

In position 5

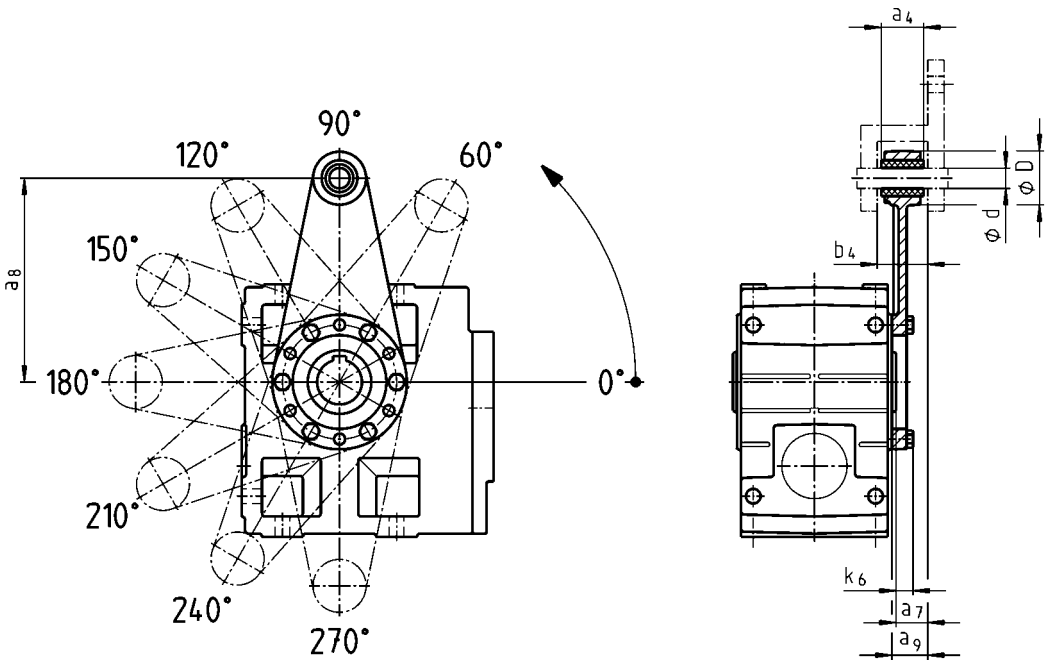

	a_4	a_7	a_8	a_9	b_4	d	D	k_6
GKS04	30	24.0	130	26.5	34.5	12	35	16
GKS05	34	23.5	160	27.5	38.5	16	45	15
GKS06	40	28.0	200	33.0	44.5	20	50	18
GKS07	46	32.5	250	37.5	50.5	25	65	21

Torque plate at housing foot

In position 2, 4 or 6

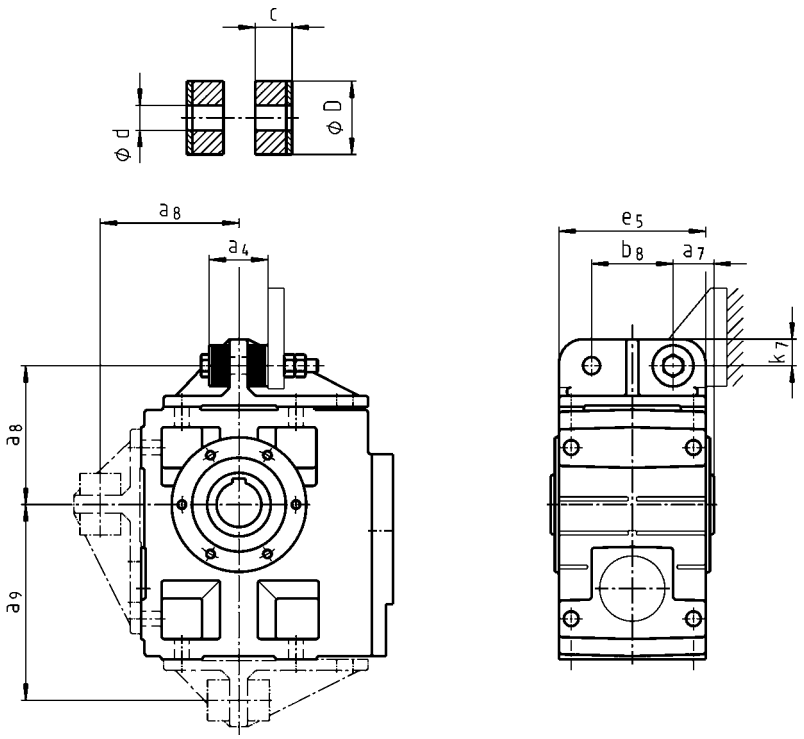

	a_4	a_7	a_8	a_9	b_8	c	d	D	e_5	k_7
GKS04	41	27.5	106	135.0	60	14.5	11	30	100	20
GKS05	45	35.0	115	160.0	70	15.0	13	40	127	25
GKS06	72	40.0	145	195.0	80	27.0	17	50	145	28
GKS07	78	50.0	170	240.0	100	28.0	21	60	180	35
GKS09	86	60.0	214	300.0	120	29.0	26	72	222	46
GKS11	94	72.5	260	375.0	145	30.0	31	92	270	55
GKS14	100	85.0	320	465.0	180		39	110	328	70

Ventilations

Position of ventilation, sealing elements and oil level check

GKS05...14-3

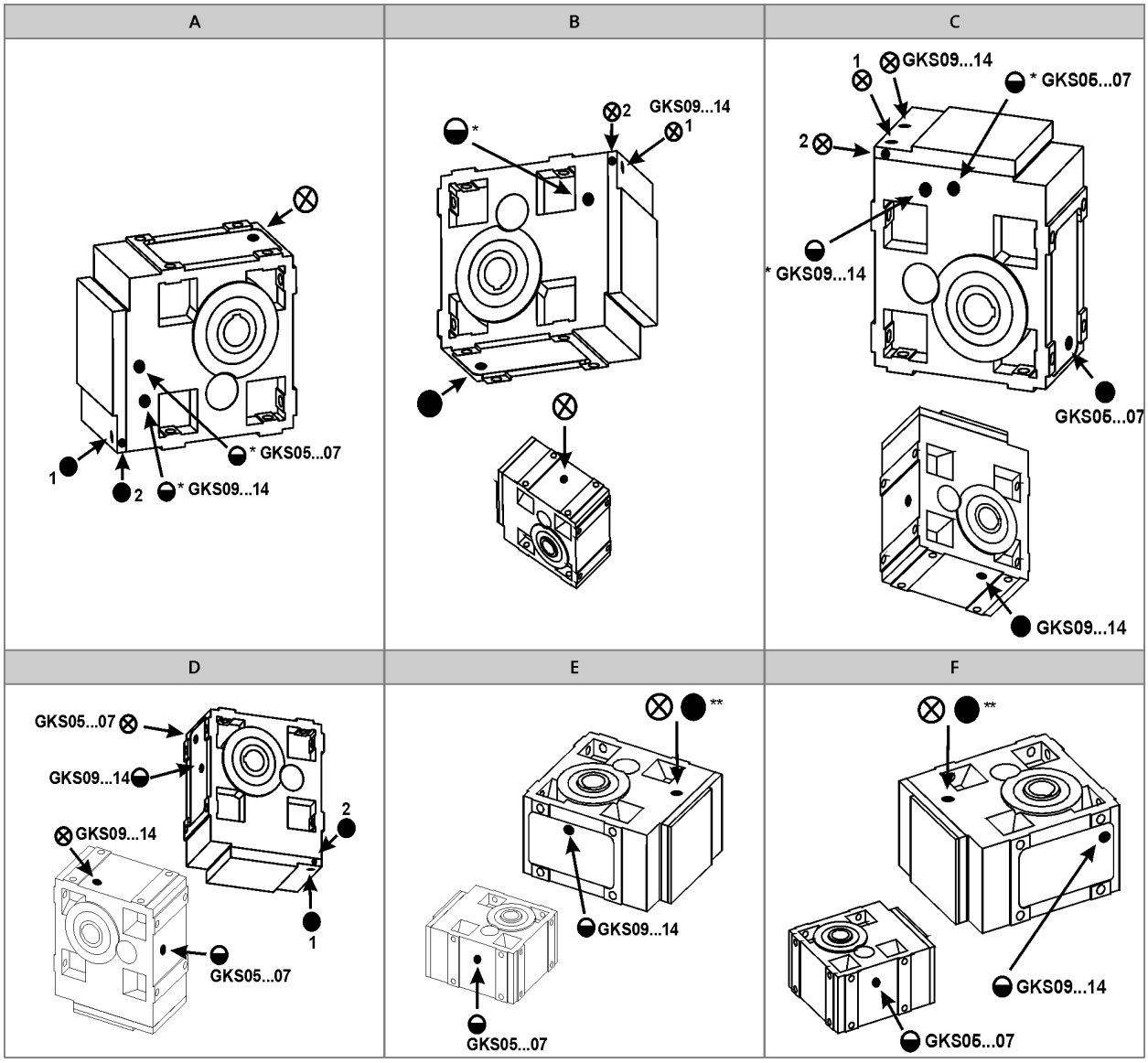

A to F Mounting position
⊗ Ventilation / Oil filler plug
● Oil drain plug
◒ Oil control plug
* On both sides
** On opposite side

Item 1 standard
Item 2 only with:
- GKS05-3M □□□ 090C□□
- GKS05-3M □□□ 100C□□
- GKS06-3M □□□ 112C□□
- GKS07-3M □□□ 160C□□

6.9



Ventilations

Position of ventilation, sealing elements and oil level check

GKS05...14-4

A	B	C
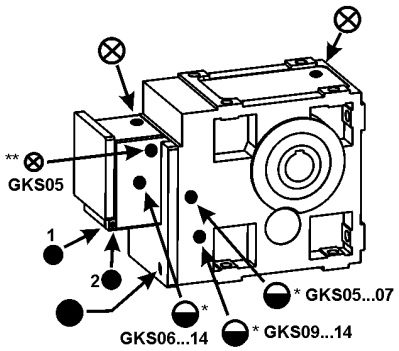	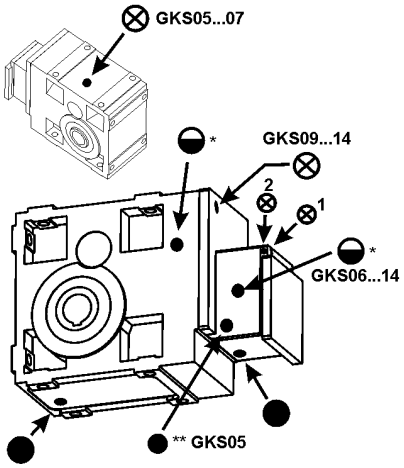	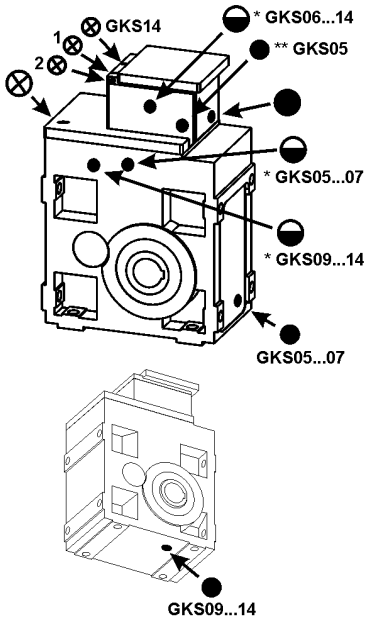
D	**E**	**F**
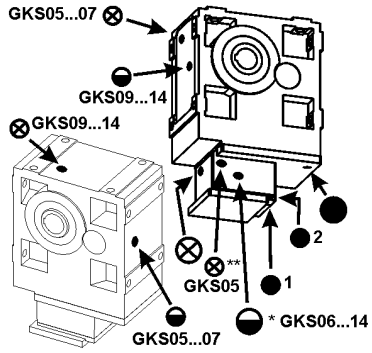	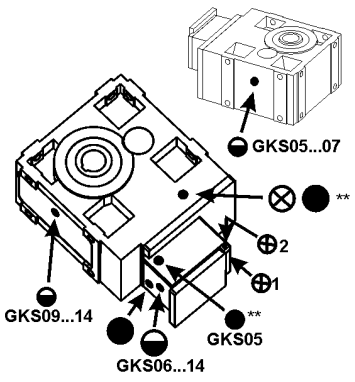	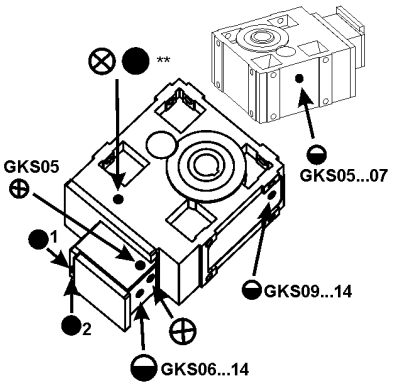

A to F Mounting position
⊗ Ventilation / Oil filler plug
● Oil drain plug
◒ Oil control plug
* On both sides
** On opposite side

Item 1 standard
Item 2 only with:
- GKS07-4M □□□ 090C□□
- GKS07-4M □□□ 100C□□
- GKS09-4M □□□ 112C□□



Ventilations

Compensation reservoir for mounting position C

GKS□□-3

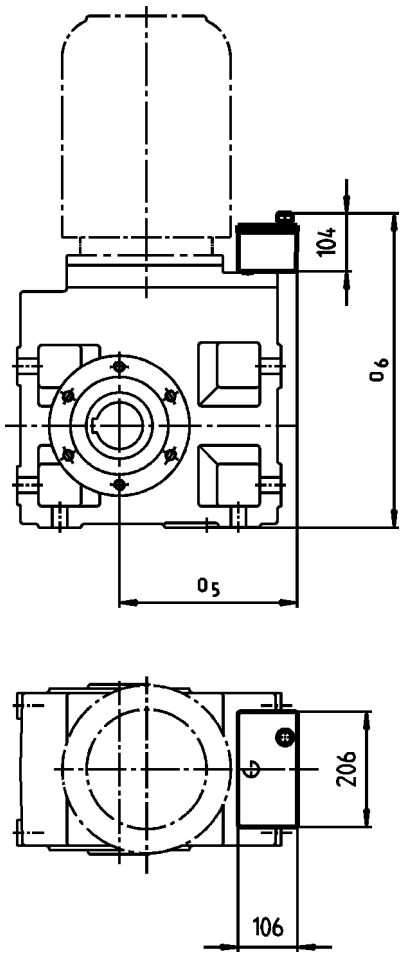

Motor	090 100		112		132		160 180 225	
	o_5	o_6	o_5	o_6	o_5	o_6	o_5	o_6
	[mm]	[mm]	[mm]	[mm]	[mm]	[mm]	[mm]	[mm]
GKS09	243	533	265	533	282	533	297	533
GKS11	258	626	280	630	304	630	318	630
GKS14			313	739	343	739	343	739

► Terminal box position 4 not permitted.



GSS helical-worm gearboxes

MD/MH three-phase AC motors
0.12 ... 0.55 kW
0.75 ... 15 kW (IE2)

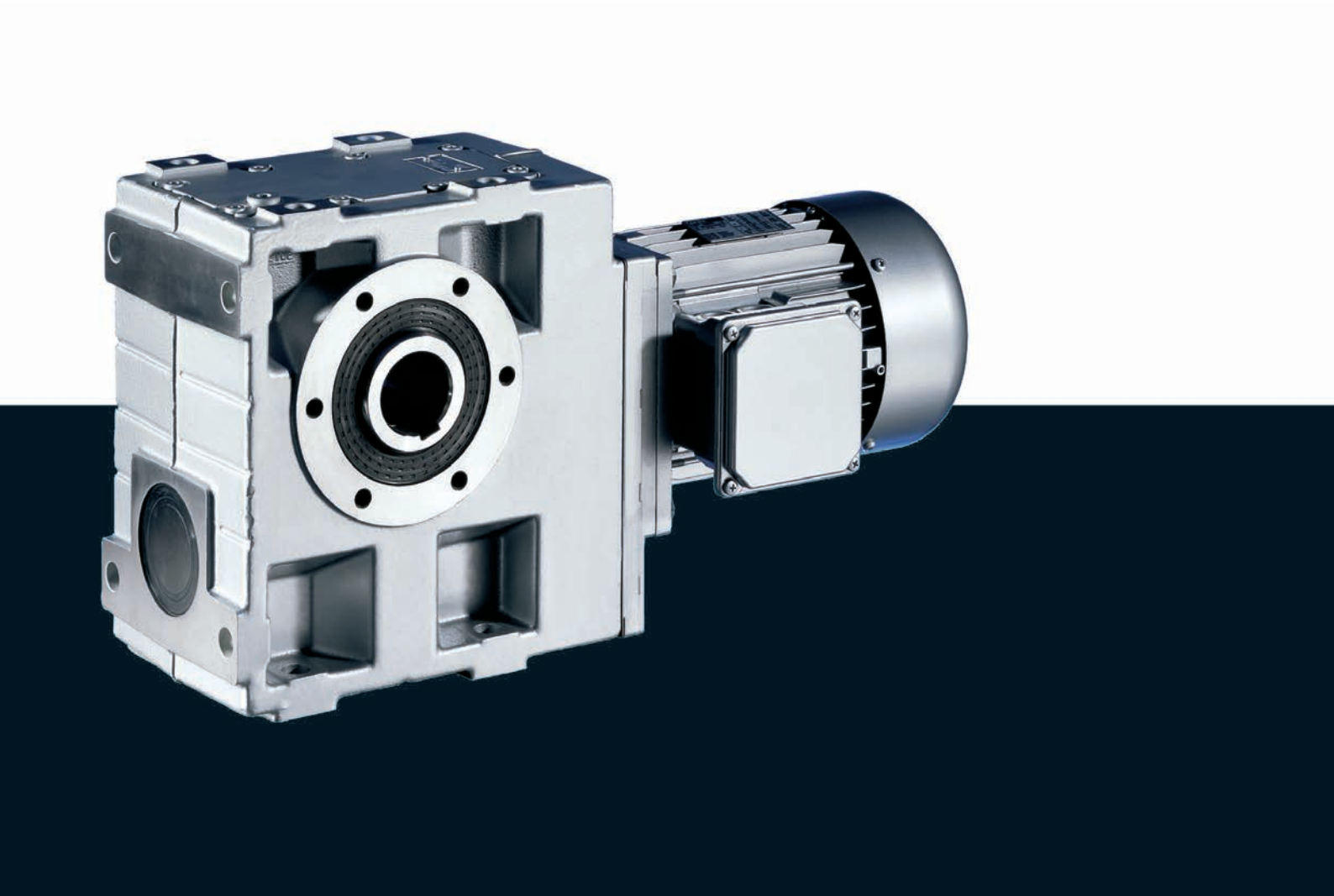

GSS helical-worm gearboxes

Contents



General information	List of abbreviations	6.10 - 4
	Product key	6.10 - 5
	Product information	6.10 - 7
	Functions and features	6.10 - 8
	Dimensioning	6.10 - 13
	Notes on ordering	6.10 - 19
	Ordering details checklist	6.10 - 20
Technical data	Permissible radial and axial forces at output	6.10 - 25
	Moments of inertia	6.10 - 28
	Efficiencies	6.10 - 32
	Weights	6.10 - 39
	Selection tables	6.10 - 45
	Dimensions	6.10 - 86
Accessories	Hollow shaft with shrink disc	6.10 - 119
	Mounting set for hollow shaft circlip: Proposed design for auxiliary tools	6.10 - 120
	Hoseproof hollow shaft cover	6.10 - 121
	Gearboxes with 2nd output shaft end	6.10 - 121
	Torque plate on threaded pitch circle	6.10 - 122
	Torque plate at housing foot	6.10 - 123
	Ventilations	6.10 - 124



List of abbreviations

$\eta_{c=1}$		Efficiency
c		Load capacity
f_N	[Hz]	Rated frequency
$F_{ax,max}$	[N]	Max. axial force
$F_{rad,max}$	[N]	Max. radial force
H_{max}	[m]	Site altitude
i		Ratio
J	[kgcm²]	Moment of inertia
m	[kg]	Mass
M_2	[Nm]	Output torque
n_2	[r/min]	Output speed
n_N	[r/min]	Rated speed
P_N	[kW]	Rated power
$S_{hü}$	[1/h]	Transition operating frequency
$T_{opr,max}$	[°C]	Max. ambient operating temperature
$T_{opr,min}$	[°C]	Min. ambient operating temperature
$U_{N,\Delta}$	[V]	Rated voltage
$U_{N,Y}$	[V]	Rated voltage

CE	Communauté Européenne
CSA	Canadian Standards Association
DIN	Deutsches Institut für Normung e.V.
EMC	Electromagnetic compatibility
EN	European standard
IEC	International Electrotechnical Commission
IM	International Mounting Code
IP	International Protection Code
NEMA	National Electrical Manufacturers Association
UL	Underwriters Laboratory Listed Product
UR	Underwriters Laboratory Recognized Product
VDE	Verband deutscher Elektrotechniker (Association of German Electrical Engineers)
CCC	China Compulsory Certificate
GOST	Certificate for Russian Federation
cURus	Combined certification marks of UL for the USA and Canada
UkrSEPRO	Certificate for Ukraine



Product key

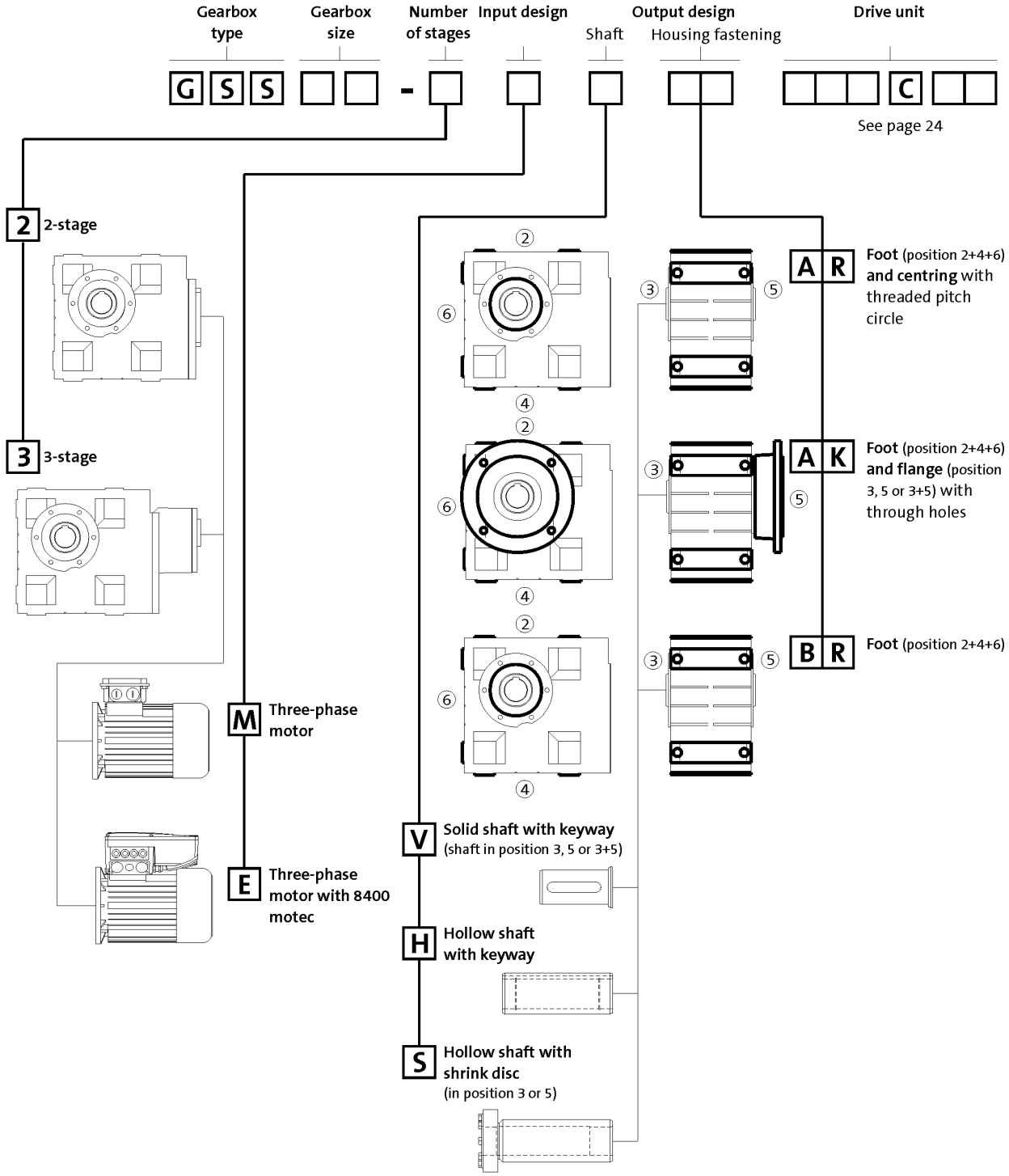

	Output design			
	V	H	S	K
	d x l [mm]	d [mm]	d [mm]	Øa2 [mm]
GSS04-2	25x50	25/30	25/30	160
GSS05-2/3	30x60	30/35	35	200
GSS06-2/3	40x80	40/45	40	200[1)]/250
GSS07-2/3	50x100	50/55	50	250/300

[1)] Only in the case of H and S type of output



Product key

Mounting position (A...F) and position of system blocks (1...6)

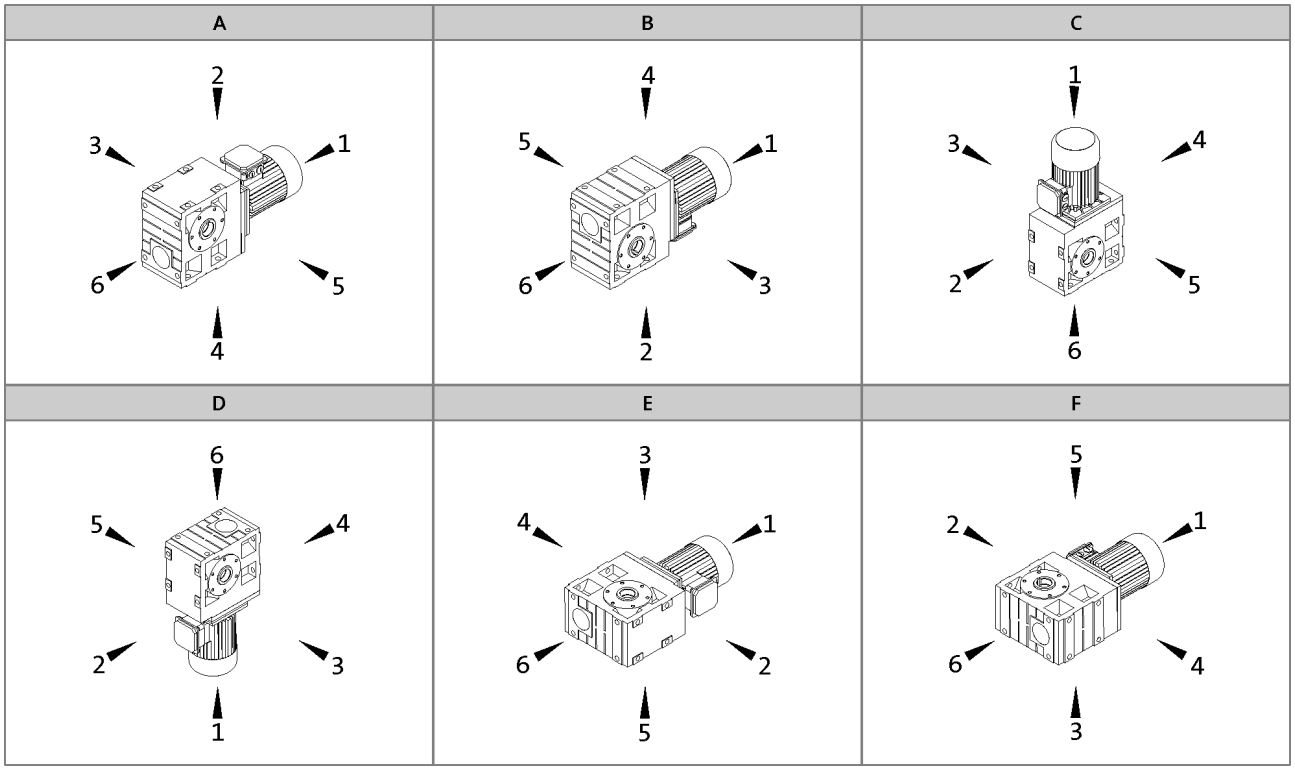

Hollow shaft: 0
Solid shaft: 3, 5, 8 (3+5)
Hollow shaft with shrink disc: 3, 5

Without flange: 0
Flange: 3, 5, 8 (3+5)
Terminal box / motec: 2, 3, 4, 5

Gearbox designs

Basic versions	
Motor efficiency	Standard efficiency Increased efficiency (IE2)
Surface and corrosion protection	OKS-G (primer: grey) OKS-S (paint: RAL 7012)
Lubricant	CLP PG 460 (synthetic)
Ventilation	Oil control plugs for GSS05 ... 07 Breather elements for GSS05 ... 07

Options	
Surface and corrosion protection	OKS-S (special paint according to RAL) OKS-M (special paint according to RAL) OKS-L (special paint according to RAL)
Lubricant	CLP HC 220 USDA H1 (synthetic)
Shaft sealing rings	Driven shaft: Viton
Accessories	Torque plate on threaded pitch circle Housing foot torque plate 2nd output shaft end Shrink disc cover Hoseproof hollow shaft cover Mounting set for hollow shaft circlip
Nameplate	Metal nameplate (supplied loose) Adhesive nameplate (supplied loose)



Product information

Lenze provides a geared motor construction kit, which covers a wide range of requirements. Numerous drive-side and output-side options enable precise adaptation of the drive to the specific application. This is the basis for versatile applications and functional scalability of our gearboxes and geared motors.
The modular concept and high power density make extremely compact sizes possible. Optimised teeth profiles and ground gears ensure low-noise operation and low backlash. The gearboxes are of compact and hence space-saving construction.

Designs

- 2-stage and 3-stage gearboxes
- Hollow shaft with keyway or shrink discSolid shaft with keyway
- Solid shaft with keyway
- Foot or flange mounting
- Torque plate, including rubber buffer
- With three-phase AC motors MD, power range 0.12 ... 0.55 kW
- With three-phase AC motors MH (efficiency class IE2) , power range 0.75 ... 15 kW

A low noise solution

Helical worm gearboxes are particularly low-noise drive components. They create a compact drive unit in combination with our servo motors. The helical worm gearboxes are designed in 2- and 3-stage versions and can reach a torque of up to 1,250 Nm and a ratio of up to i=1847.

Inverters for motor-proximity installation

The Drive Package with decentralised Inverter Drives 8400 motec covers a power range up to 7.5 kW.

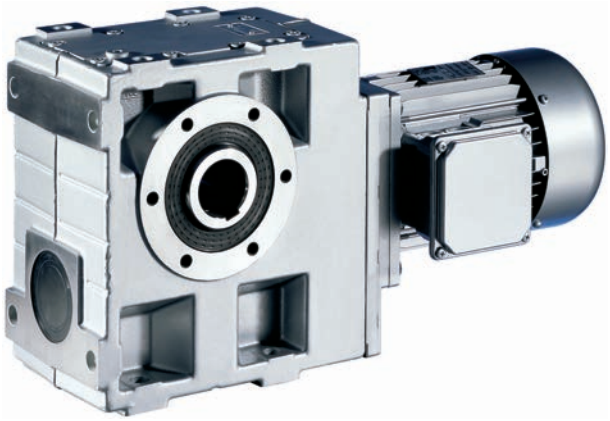

Helical-bevel geared motor GSS07-2M HBR 100-32



Functions and features

Gearbox type	GSS
Housing	
Design	Cuboid
Material	Aluminium / cast iron
Solid shaft	
Design	with keyway to DIN 6885
Tolerance	m6 (d > 50 mm) k6 (d ≤ 50 mm)
Material	Tempered steel C45 or 42CrMo4
Hollow shaft	
Design	H: with keyway S: smooth
Tolerance	Bore H7
Material	Tempered steel C45
Toothed parts	
Design	Optimised tooth flanks and profile geometry Ground tooth flanks
Material	Case-hardened steel, bronze (worm gear only)
Shaft-hub joint	1st stage/prestage/helical (bevel) gearbox: Friction-type connection Output stage (= 2nd, 3rd or 4th stage): Friction-type or positive-fit connection
Shaft sealing rings	
Design	With dust lip
Material	NB / FP
Bearing	
Design	Ball bearing / tapered-roller bearing depending on size and design
Lubricants	
Standard	DIN 51502
Quantities	corresponding to mounting position (see operating instructions)
Mechanical efficiency	
1-stage gearboxes [$\eta_{c=1}$]	
2-stage gearboxes [$\eta_{c=1}$]	0.62 ... 0.92 [1)]
3-stage gearboxes [$\eta_{c=1}$]	0.64 ... 0.92 [1)]
4-stage gearboxes [$\eta_{c=1}$]	
Notes	Dependent on transmission ratio Housing at operating temperature and teeth run in

[1)] 32 - Efficiencies depending on ratio



Functions and features

Lubricants

Lenze gearboxes and geared motors are ready for operation on delivery and are filled with lubricants specific to both the drive and the design. The mounting position and design specified in the order are key factors in choosing the volume of lubricant.

The lubricants listed in the lubricant table are approved for use in Lenze drives.

Lubricant table

Mode	CLP PG 460	CLP HC 220 USDA H1
Ambient temperature [°C]	-20 ... +40	
Specification	Synthetic-based oil (polyglycol)	Synthetic-based oil (synthetic hydrocarbon / poly-alpha-olefin oil)
Note	Cannot be mixed with other oil types.	For food processing industry
Changing interval	25000 operating hours not later than after three years (oil temperature 70...80 °C)	16000 operating hours not later than after three years (oil temperature 70...80 °C)
Fuchs		bremer & leguil Cassida Fluid GL 220
Klüber	Klübersynth GH 6-460	Klüberoil 4 UH1-220 N
Shell	Shell Tivela S 460	

- ► Please contact your Lenze office if you are operating at ambient temperatures in areas up to < -20 °C > or up to +40°C.
- ► Caution: when using the lubricant CLP HC 220 with the GSS helical-worm gearbox, the load capacity c is reduced to 80 % of the values stated in the catalogue.



Functions and features

Surface and corrosion protection

For optimum protection of geared motors against ambient conditions, the surface and corrosion protection system (OKS) offers tailor-made solutions.

Various surface coatings combined with other protective measures ensure that the geared motors operate reliably even at high air humidity, in outdoor installations or in the presence of atmospheric impurities. Any colour from the RAL Classic collection can be chosen for the top coat. The geared motors are also available unpainted (no surface and corrosion protection).

Surface and corrosion protection system	Applications	Measures
	Catalogue text	Catalogue text
OKS-G (primed)	• Dependent on subsequent top coat applied	• 1K priming coat (grey) • Zinc-coated screws • Rust-free breather elements Optional measures • Stainless steel nameplate
OKS-S (small)	• Standard applications • Internal installation in heated buildings • Air humidity up to 90%	• Surface coating as per corrosivity category C1 (in line with EN 12944-2) • Zinc-coated screws • Rust-free breather elements Optional measures • Stainless steel nameplate
OKS-M (medium)	• Internal installation in non-heated buildings • Covered, protected external installation • Air humidity up to 95%	• Surface coating as per corrosivity category C2 (in line with EN 12944-2) • Zinc-coated screws • Rust-free breather elements Optional measures • Stainless steel shaft • Stainless steel nameplate • Rust-free shrink disc (on request)
OKS-L (high)	• External installation • Air humidity above 95% • Chemical industry plants • Food industry	• Surface coating as per corrosivity category C3 (in line with EN 12944-2) • Blower cover and B end shield additionally primed • Cable glands with gaskets • Corrosion-resistant brake with cover ring, stainless friction plate, and chrome-plated armature plate (on request) • All screws/screw plugs zinc-coated • Stainless breather elements • Threaded holes that are not used are closed by means of plastic plugs Optional measures • Sealed recesses on motor (on request) • Stainless steel shaft • Stainless steel nameplate • Rust-free shrink disc (on request) • Additional priming coat on cast iron fan • Oil expansion tank and torque plates painted separately and supplied loose



Functions and features

Structure of surface coating

Surface and corrosion protection system	Corrosivity category	Surface coating	Colour
	DIN EN ISO 12944-2	Structure	
Without OKS (uncoated)		Dipping primed gearbox	
OKS-G (primed)		Dipping primed gearbox 1K priming coat	
OKS-S (small)	C1	Dipping primed gearbox 2K-PUR top coat	Standard: RAL 7012 Optional: RAL Classic
OKS-M (medium)	C2	Dipping primed gearbox 1K priming coat 2K-PUR top coat	Standard: RAL 7012 Optional: RAL Classic
OKS-L (high)	C3	Dipping primed gearbox 2K-EP priming coat 2K-PUR top coat	Standard: RAL 7012 Optional: RAL Classic



Functions and features

Ventilation

Gearboxes without ventilation
No ventilation is required for gearbox GSS04.

Gearboxes with ventilation
Gearboxes GSS05 ... 07 are supplied with breather elements as standard.



Dimensioning

General information about the data provided in this catalogue

Powers, torques and speeds
The powers, torques and speeds specified in this catalogue are rounded values and are valid under the following conditions:

- Operating time/day = 8 h (100% OT)
- Duty class I for up to 10 switching operations/h
- Mounting positions and designs in this catalogue
- Standard lubricant
- T_{amb} = 20 °C for gearboxes,
  T_{amb} = 40 °C for motors (in accordance with EN 60034)
- Site altitude < = 1000 m amsl
- The selection tables provide the permissible mechanical powers and torques. For notes on the thermal power limit, see chapter drive dimensioning.
- The rated power specified for motors and geared motors applies to operating mode S1 (in accordance with EN 60034).

Under different operating conditions, the values obtained may vary from those listed here.
In the case of extreme operating conditions, please consult your Lenze sales office.



Dimensioning

Thermal power limit

The thermal power limit, defined by the heat balance, limits the permissible gearbox continuous power. It may be less than the mechanical power ratings listed in the selection tables.

The thermal power limit is affected by:
- the churning losses in the lubricant. These are determined by the mounting position and the circumferential speed of the wheels
- the load and the speed
- the ambient conditions: temperature, air circulation, input or dissipation via shafts and the foundation

Please consult your Lenze subsidiary
- if the following input speeds n_1 are exceeded on a continuous basis (continuous is defined as more than 8 h/day):

Motor frame size	Mounting position A, B, E, F	Mounting position C, D
063 ... 100	3000 r/min	3000 r/min
112 ... 132	3000 r/min	1500 r/min
160 ... 225	2000 r/min	1500 r/min

- if the following input speeds n_1 are exceeded:

Motor frame size	Mounting position A, B, E, F	Mounting position C, D
063 ... 100	4000 r/min	3000 r/min
112 ... 132	4000 r/min	2000 r/min
160 ... 225	3000 r/min	1500 r/min

Possible ways of extending the application area

- synthetic lubricant (option)
- shaft sealing rings made from FP material/Viton (option)
- reduction in lubricant quantity
- cooling of the geared motor by means of air convection on the machine/system



Dimensioning

Load capacity and application factor

Load capacity c of gearbox
Rated value for the load capacity of Lenze geared motors.
- c is the ratio of the permissible rated torque of the gearbox to the rated torque supplied by the drive component (e.g. the built-in Lenze motor).
- The value of c must always be greater than the value of the application factor k calculated for the application.

Application factor k (according to DIN 3990)
Takes into account the influence of temporally variable loads which are actually present during the anticipated operating time of gearboxes and geared motors.
k is determined by:
- the type of load
- the load intensity
- temporal influences

Duty class	Load type
I	Smooth operation, small or light jolts
II	Uneven operation, average jolts
III	Uneven operation, severe jolts and/or alternating load

Application factor k

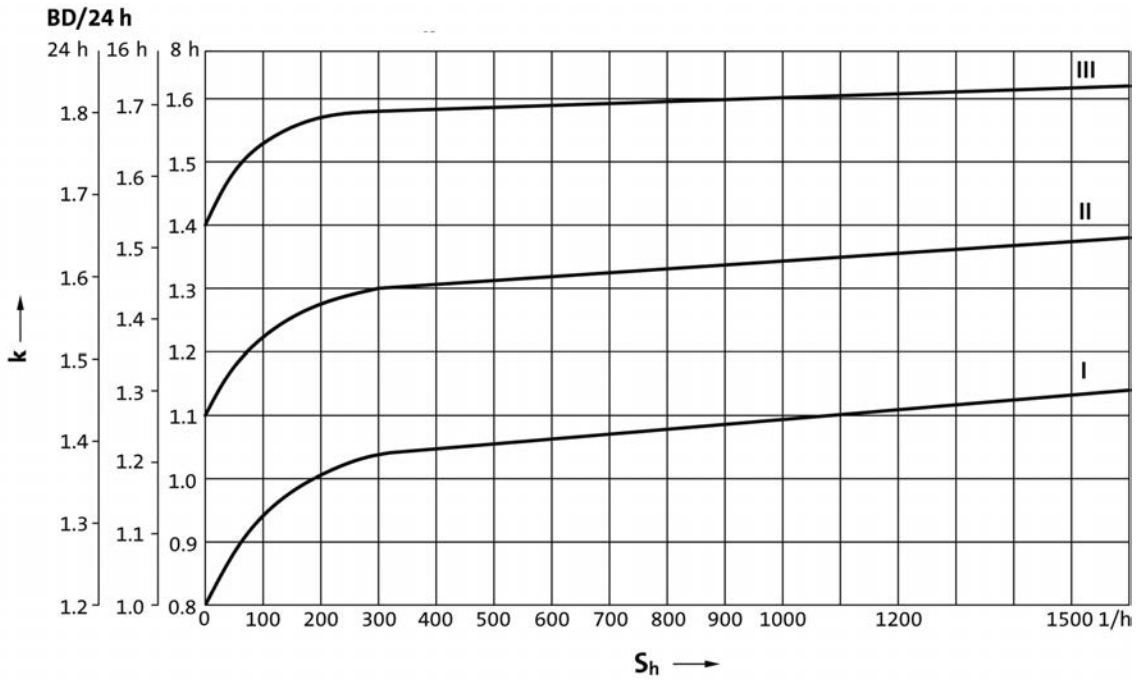

Dimensioning

Torque derating at low motor frequencies

Motor size-dependent torque reduction, taking into account the thermal response during operation on the inverter.

Torque characteristics

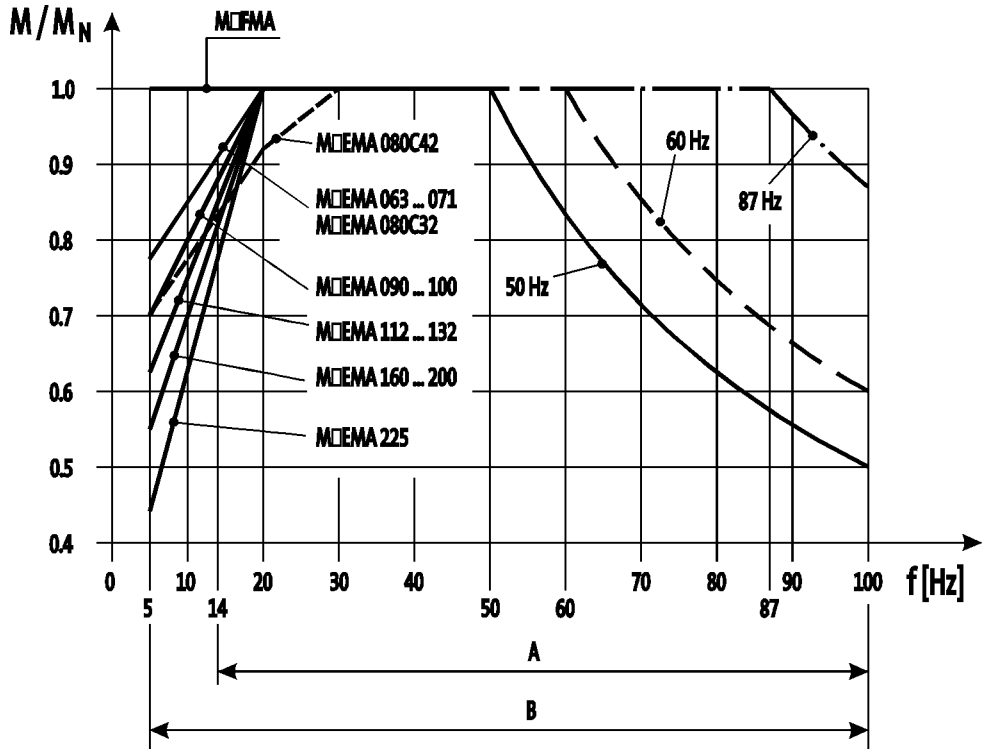

A = Operation with integral fan and brake
B = Operation with integral fan and brake control "Holding current reduction"

You can use the Drive Solution Designer for precise drive dimensioning.

The Drive Solution Designer helps you to carry out a fast and high-quality drive dimensioning.
The software includes well-founded and proven knowledge on drive applications and electro-mechanical drive components.

Please contact your Lenze sales office.



Dimensioning

Notes on the selection tables

The selection tables show the available combinations of gearbox type, number of stages, ratio and motor. The following legend indicates the structure of the selection tables.

Gearbox type

GST helical gearbox

Technical data



Selection tables

Rated speed n_N of the drive motor

Product key of geared motor

Rated power P_N of the drive motor in relation to the rated frequency

► 50 Hz, 60 Hz: P_N = 0.75 kW

n_N	1410 r/min			1720 r/min			i		
f_N	50 Hz			60 Hz					
	n_2 [r/min]	M_2 [Nm]	c	n_2 [r/min]	M_2 [Nm]	c			
	881	8.0	2.4	1069	6.6	2.8	1.600	GST04-1M □□□080C32	76
	689	10	2.2	835	8.4	2.6	2.048	GST04-1M □□□080C32	76

Output speed n_2

Output torque M_2 (constant for all listed frequencies)

The load capacity c of the gearbox c is the ratio of the gearbox's rated torque to the rated torque of the three-phase motor (calculated in respect of its application to the output shaft). c must always be greater than the application factor k determined for the application

Ratio i

Page number for dimensions

$$c = \frac{M_{2,zul}}{M_{1N} \cdot i \cdot \eta_{Getr}} > k$$



Dimensioning

Notes on the selection tables

Motor voltages

The power values and torques indicated in the selection tables relate to the following motor voltages:
- 50 Hz : Δ 230 V / Y 400 V
- 60 Hz : Δ 265 V / Y 460 V
- 87 Hz : Δ 400 V

Operation at 87 Hz

In 87 Hz operation, the three-phase AC motor (which is designed for a voltage of Δ 230 V / Y 400 V at 50 Hz) is operated on an inverter with 400 V rated voltage in a delta connection. It is important to note here that the inverter must be configured for 87Hz output.
This offers the following advantages over 50 Hz operation:
- the setting range of the motor is increased by a factor of 1.73.
- the motor can then provide around 1.73 times greater output, which in turn allows a smaller and more affordable motor to be selected for the application.
- the efficiency of the motor is also improved.



Notes on ordering

We want to be sure that you receive the correct products in good time.

To allow us to achieve this we need:
- your address and your company data
- our product key for the individual products in this catalogue
- your delivery date and delivery address

Ordering procedure
Please use the ordering information checklist to ensure that you provide all the ordering information required for the various products.

The ordering information checklist, the product key, the basic versions, options, mounting position and position of the system blocks will be found in the General – Product key section.

A list of Lenze's worldwide sales offices can be found on the Internet: www.Lenze.com.



Ordering details checklist

☐ **Offer**

Page __ of __

☐ **Order**

Customer No.

Job No.

Fax No. _____

Sender

Company _____ Made out by (name) _____

Street/P.O. Box _____ Department _____

P.O. Box, City _____ Telephone No. _____

Date _____ Signature _____

Delivery address (if different)

Street/P.O. Box _____ Desired delivery date _____

P.O. Box, City _____ Dispatching notes _____

Invoice recipient (if different)

Street/P.O. Box _____

Postal code, City _____

6.10



Ordering details checklist

Customer No.

Job No.

Page __

Quantity

Efficiency class ☐ Standard efficiency ☐ High efficiency (IE2)

Rated frequency ☐ 50 Hz ☐ 60 Hz ☐ 87 Hz

Ratio i

GSS ☐☐ – ☐2 ☐3 ☐M ☐E ☐V ☐H ☐S ☐A ☐B ☐R ☐K Motor frame size ☐☐☐C☐☐

Hollow shaft d = ☐ mm

Flange a_2 = ☐ mm

Mounting position ☐A ☐B ☐C ☐D ☐E ☐F

Position of system blocks

Shaft/shrink disc: ☐0 ☐3 ☐4 ☐8

Flange: ☐0 ☐3 ☐5 ☐8

Terminal box: ☐2 ☐3 ☐4 ☐5

Surface and corrosion protection ☐ OKS-S colour: RAL 7012 ☐ OKS-G (primed)

Options

Special lubricants ☐ CLP HC 220 USDA H1 (for the food industry)

Surface and corrosion protection ☐ OKS-S (small) ☐ OKS-M (medium) RAL ☐ ☐ OKS-L (high) ☐ OKS-G (primed)

Accessories ☐ Torque support for housing foot ☐ Torque support for threaded pitch circle ☐ 2nd output shaft end ☐ Mounting set for hollow-shaft circlip ☐ Shrink disc cover ☐ Hollow shaft cover, hoseproof

Shaft sealing rings ☐ Viton

Breathing ☐ Breather elements for GSS05



Ordering details checklist

Three-phase AC motors options

Customer No. ☐☐☐☐☐☐☐☐

Job No. ☐☐☐☐☐☐☐☐☐☐

Page __

Motor connection

Terminal box
- ☐ with plug-in connector ICN 6-pin. Adhere to permissible rated motor current 20 A!
- ☐ with plug-in connector ICN 8-pin. Adhere to permissible rated motor current 20 A!
- ☐ with plug-in connector HAN10E. Adhere to permissible rated current 16 A!
- ☐ with plug-in connector HAN-Modular. Adhere to permissible rated current 16 / 40 A!

Cable entry
only with M□□MAXX/LL063 ... 132
or terminal box with plug-in connector
in position 1 ☐ 2 ☐ 3 ☐ 4 ☐ 5 ☐

Blower

☐ 1~ ☐ 3~

☐ Terminal box with plug-in connector ICN

Terminal box position 2 ☐ 3 ☐ 4 ☐ 5 ☐

Spring-applied brake

Brake version ☐ Standard ☐ Longlife

Brake size ☐

Characteristic torque ☐ Nm

Rated voltage AC ☐ DC ☐ ☐ V

Rectifier
Only in the case of AC supply voltage

- ☐ Half-wave rectifier
- ☐ Bridge rectifier
- ☐ Bridge/half-wave rectifier (overexcitation)
- ☐ Bridge/half-wave rectifier (holding current reduction)

Brake options
Manual release lever in position 2 ☐ 3 ☐ 4 ☐ 5 ☐

☐ Low-noise version (Standard in the case of brake with speed/position encoder)

6.10



Ordering details checklist

Three-phase AC motors options

Customer No. ☐☐☐☐☐☐☐☐

Job No. ☐☐☐☐☐☐☐☐☐☐

Page __

Speed/position encoder

Resolver ☐ RS1

Incremental encoder HTL ☐ IG128-24V-H ☐ IG512-24V-H ☐ IG1024-24V-H ☐ IG2048-24V-H

Incremental encoder TTL ☐ IG512-5V-T ☐ IG1024-5V-T ☐ IG2048-5V-T

Feedback with ICN connector ☐ IG128-24V-H not possible with plug-in connector!

Motor protection ☐ PTC ☐ KTY 83-110 ☐ KTY 84-130

Approval ☐ UL/CSA approval: cURus ☐ CCC ☐ China Energy Label

Further options

Indication of supply voltage only for motor frame sizes 112C32 to 225C22

☐ Δ; 400V-50Hz; 460V-60Hz ☐ Y/Δ; 400/230V-50Hz; 460/265V-60Hz (-/400V-87Hz possible in operation with frequency inverter)

☐ Protection cover

☐ 2nd shaft end

☐ Handwheel

☐ Increased centrifugal mass

☐ 2nd nameplate (adhesive nameplate/metal nameplate)



Permissible radial and axial forces at output

Permissible radial force
$F_{rad,per} = \min(f_w \times f_\alpha \times F_{rad,max}$; $f_w \times F_{rad,max}$ at $n_2 \leq 16$ r/min)

Permissible axial force
$F_{ax,per} = F_{ax,max}$ if $F_{rad} = 0$

If F_{rad} **and** $F_{ax} \neq 0$; please contact Lenze.

Application of forces

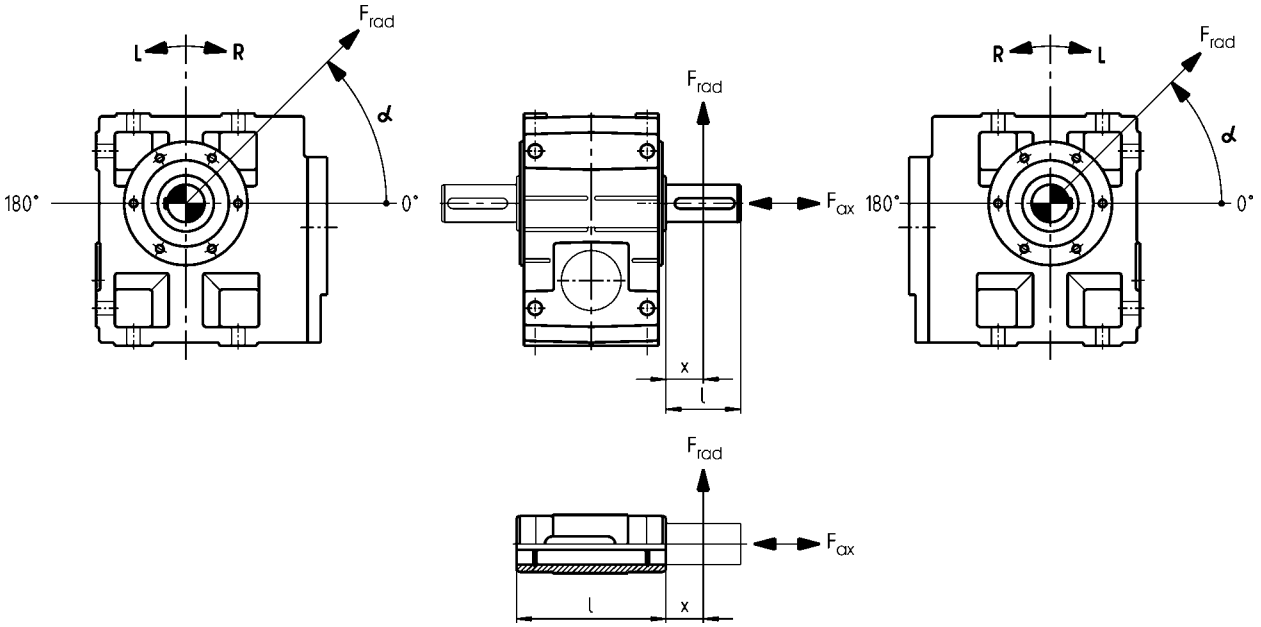

Effective direction factor f_α at output shaft

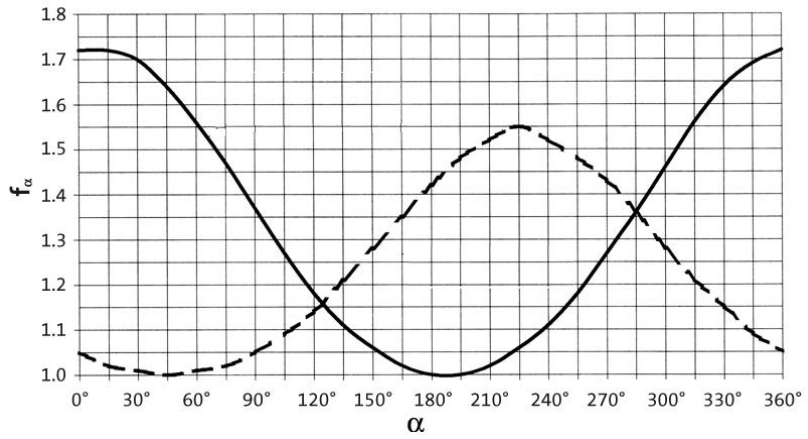

——— Direction of rotation R
— — — Direction of rotation L

6.10



Permissible radial and axial forces at output

Additional load factor f_w at output shaft

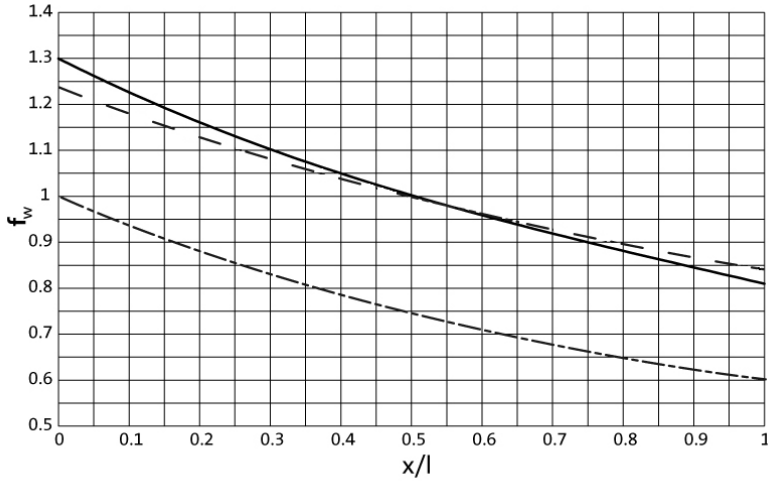

——— Solid shaft (V□□)
— · — Hollow shaft (H□□)
— — — Solid shaft with flange (V□K)

GSS□□-2/3□ H□□

Size	n_2 [r/min]								
Gearbox	630	400	250	160	100	63	40	25	≤16

	Max. radial force, Hollow shaft								
	$F_{rad,max}$	$F_{rad,max}$	$F_{rad,max}$	$F_{rad,max}$	$F_{rad,max}$	$F_{rad,max}$	$F_{rad,max}$	$F_{rad,max}$	$F_{rad,max}$
	[N]	[N]	[N]	[N]	[N]	[N]	[N]	[N]	[N]
GSS04	2800	3000	3800	4500	5300	6000	6000	6000	6000
GSS05	3000	3200	3600	4300	5100	6000	7000	7500	7500
GSS06	4400	4600	4800	5600	6600	7700	9100	10700	11500
GSS07	4600	5100	5600	6700	8200	10000	12100	14800	16000

	Max. axial force, Hollow shaft								
	$F_{ax,max}$	$F_{ax,max}$	$F_{ax,max}$	$F_{ax,max}$	$F_{ax,max}$	$F_{ax,max}$	$F_{ax,max}$	$F_{ax,max}$	$F_{ax,max}$
	[N]	[N]	[N]	[N]	[N]	[N]	[N]	[N]	[N]
GSS04	2200	2900	3700	4200	4900	5500	5500	5500	5500
GSS05	1600	2200	2800	3500	4400	5500	6000	6000	6000
GSS06	1900	2500	3200	4100	5200	6500	8200	9000	9000
GSS07	1800	2400	3100	4100	5500	7200	9500	12500	12500

6.10

- Application of force F_{rad}: at hollow shaft end face (x = 0)
- $F_{ax,max}$ only valid with F_{rad} = 0
- Neither radial nor axial forces are permissible for the hollow shaft with shrink disc (S□□).



Permissible radial and axial forces at output

GSS□□-2/3□ V□R

Size	n_2 [r/min]								
Gearbox	630	400	250	160	100	63	40	25	≤16

	Max. radial force, Solid shaft without flange								
	$F_{rad,max}$	$F_{rad,max}$	$F_{rad,max}$	$F_{rad,max}$	$F_{rad,max}$	$F_{rad,max}$	$F_{rad,max}$	$F_{rad,max}$	$F_{rad,max}$
	[N]	[N]	[N]	[N]	[N]	[N]	[N]	[N]	[N]
GSS04	2200	2400	3000	3500	4100	4200	4200	4200	4200
GSS05	2300	2500	2900	3400	4000	4300	4300	4300	4300
GSS06	3400	3500	3600	4200	5000	5900	6900	8200	8500
GSS07	3700	4000	4200	5100	6300	7700	9300	11300	12000

	Max. axial force, Solid shaft without flange								
	$F_{ax,max}$	$F_{ax,max}$	$F_{ax,max}$	$F_{ax,max}$	$F_{ax,max}$	$F_{ax,max}$	$F_{ax,max}$	$F_{ax,max}$	$F_{ax,max}$
	[N]	[N]	[N]	[N]	[N]	[N]	[N]	[N]	[N]
GSS04	2200	2900	3700	4200	4900	5500	5500	5500	5500
GSS05	1600	2200	2800	3500	4400	5500	6000	6000	6000
GSS06	1900	2500	3200	4100	5200	6500	8200	9000	9000
GSS07	1800	2400	3100	4100	5500	7200	9500	12500	12500

GSS□□-2/3□ V□K

Size	n_2 [r/min]								
Gearbox	630	400	250	160	100	63	40	25	≤16

	Max. radial force, Solid shaft with flange								
	$F_{rad,max}$	$F_{rad,max}$	$F_{rad,max}$	$F_{rad,max}$	$F_{rad,max}$	$F_{rad,max}$	$F_{rad,max}$	$F_{rad,max}$	$F_{rad,max}$
	[N]	[N]	[N]	[N]	[N]	[N]	[N]	[N]	[N]
GSS04	2750	3000	4100	4400	4700	4700	4700	4700	4700
GSS05	3450	3750	4900	4900	4900	4900	4900	4900	4900
GSS06	5100	5250	7000	8100	9400	9400	9400	9400	9400
GSS07	5500	6000	7900	9100	10600	12400	14000	14000	14000

	Max. axial force, Solid shaft with flange								
	$F_{ax,max}$	$F_{ax,max}$	$F_{ax,max}$	$F_{ax,max}$	$F_{ax,max}$	$F_{ax,max}$	$F_{ax,max}$	$F_{ax,max}$	$F_{ax,max}$
	[N]	[N]	[N]	[N]	[N]	[N]	[N]	[N]	[N]
GSS04	2100	2800	3500	4000	4200	4200	4200	4200	4200
GSS05	1500	2000	2500	3100	4000	4900	5500	5500	5500
GSS06	1600	2200	2800	3500	4500	5700	7300	8800	8800
GSS07	1400	1900	2400	3200	4300	5900	8000	10000	10000

► Application of force F_{rad}: centre of shaft journal (x = l/2)
► $F_{ax,max}$ only valid with F_{rad} = 0



Moments of inertia

GSS□□-2

► Moment of inertia (J) depending on ratio i

Gearbox			GSS04
5.639	J	[kgcm²]	1.120
7.733	J	[kgcm²]	0.652
9.042	J	[kgcm²]	0.809
9.897	J	[kgcm²]	0.430
10.827	J	[kgcm²]	0.368
12.400	J	[kgcm²]	0.487
13.810	J	[kgcm²]	0.247
15.869	J	[kgcm²]	0.329
17.360	J	[kgcm²]	0.284
20.417	J	[kgcm²]	0.673
22.143	J	[kgcm²]	0.195
24.800	J	[kgcm²]	0.420
27.125	J	[kgcm²]	0.145
31.738	J	[kgcm²]	0.288
34.100	J	[kgcm²]	0.096
39.200	J	[kgcm²]	0.247
43.917	J	[kgcm²]	0.064
50.000	J	[kgcm²]	0.173
54.250	J	[kgcm²]	0.131
61.250	J	[kgcm²]	0.130
68.200	J	[kgcm²]	0.087
77.000	J	[kgcm²]	0.086
87.833	J	[kgcm²]	0.059
99.167	J	[kgcm²]	0.058
111.318	J	[kgcm²]	0.039
125.682	J	[kgcm²]	0.038
139.500	J	[kgcm²]	0.027
157.500	J	[kgcm²]	0.026
183.786	J	[kgcm²]	0.016
207.500	J	[kgcm²]	0.016

Gearbox			GSS05
5.639	J	[kgcm²]	2.821
7.733	J	[kgcm²]	1.664
9.042	J	[kgcm²]	2.014
9.897	J	[kgcm²]	1.102
10.827	J	[kgcm²]	0.941
12.400	J	[kgcm²]	1.235
13.810	J	[kgcm²]	0.638
15.869	J	[kgcm²]	0.840
17.360	J	[kgcm²]	0.722
20.417	J	[kgcm²]	1.601
22.143	J	[kgcm²]	0.504
24.800	J	[kgcm²]	1.059
27.125	J	[kgcm²]	0.377
31.738	J	[kgcm²]	0.733
35.306	J	[kgcm²]	0.233
39.200	J	[kgcm²]	0.610
43.917	J	[kgcm²]	0.167
50.000	J	[kgcm²]	0.435
54.250	J	[kgcm²]	0.341
61.250	J	[kgcm²]	0.332
70.611	J	[kgcm²]	0.211
79.722	J	[kgcm²]	0.206
87.833	J	[kgcm²]	0.153
99.167	J	[kgcm²]	0.149
113.667	J	[kgcm²]	0.096
128.333	J	[kgcm²]	0.094
137.950	J	[kgcm²]	0.070
155.750	J	[kgcm²]	0.069
176.313	J	[kgcm²]	0.045
199.063	J	[kgcm²]	0.044

► The moments of inertia relate to the drive shaft of the gearbox.
► The total moment of inertia is calculated by adding the values of the gearbox, motor and accessories.



Moments of inertia

GSS□□-2

► Moment of inertia (J) depending on ratio i

Gearbox			GSS06
5.833	J	[kgcm²]	6.966
8.000	J	[kgcm²]	4.219
9.042	J	[kgcm²]	5.541
10.238	J	[kgcm²]	2.811
11.200	J	[kgcm²]	2.393
12.400	J	[kgcm²]	3.461
14.286	J	[kgcm²]	1.630
15.869	J	[kgcm²]	2.348
17.360	J	[kgcm²]	2.006
20.417	J	[kgcm²]	4.172
22.143	J	[kgcm²]	1.392
24.800	J	[kgcm²]	3.056
27.125	J	[kgcm²]	1.039
31.738	J	[kgcm²]	2.101
35.306	J	[kgcm²]	0.660
39.200	J	[kgcm²]	1.635
43.917	J	[kgcm²]	0.475
50.000	J	[kgcm²]	1.164
54.250	J	[kgcm²]	0.955
61.250	J	[kgcm²]	0.887
70.611	J	[kgcm²]	0.610
79.722	J	[kgcm²]	0.570
87.833	J	[kgcm²]	0.443
99.167	J	[kgcm²]	0.417
113.667	J	[kgcm²]	0.276
128.333	J	[kgcm²]	0.260
137.950	J	[kgcm²]	0.201
155.750	J	[kgcm²]	0.191
174.375	J	[kgcm²]	0.130
196.875	J	[kgcm²]	0.123

Gearbox			GSS07
5.862	J	[kgcm²]	21.357
8.125	J	[kgcm²]	12.754
9.086	J	[kgcm²]	17.436
10.000	J	[kgcm²]	9.140
11.200	J	[kgcm²]	7.498
12.594	J	[kgcm²]	10.713
14.286	J	[kgcm²]	4.837
15.500	J	[kgcm²]	7.792
17.360	J	[kgcm²]	6.424
20.517	J	[kgcm²]	13.579
22.143	J	[kgcm²]	4.177
25.188	J	[kgcm²]	9.590
27.125	J	[kgcm²]	3.130
31.000	J	[kgcm²]	7.051
35.306	J	[kgcm²]	1.955
39.200	J	[kgcm²]	5.368
43.271	J	[kgcm²]	1.433
50.000	J	[kgcm²]	3.527
54.250	J	[kgcm²]	2.888
61.250	J	[kgcm²]	2.698
70.611	J	[kgcm²]	1.812
79.722	J	[kgcm²]	1.700
86.542	J	[kgcm²]	1.338
97.708	J	[kgcm²]	1.263
113.667	J	[kgcm²]	0.833
128.333	J	[kgcm²]	0.789
137.950	J	[kgcm²]	0.609
155.750	J	[kgcm²]	0.579
174.375	J	[kgcm²]	0.391
196.875	J	[kgcm²]	0.373

► The moments of inertia relate to the drive shaft of the gearbox.
► The total moment of inertia is calculated by adding the values of the gearbox, motor and accessories.



Moments of inertia

GSS□□-3

► Moment of inertia (J) depending on ratio i

Gearbox			GSS05
125.476	J	[kgcm²]	0.154
153.708	J	[kgcm²]	0.117
193.233	J	[kgcm²]	0.078
222.133	J	[kgcm²]	0.206
250.952	J	[kgcm²]	0.151
283.333	J	[kgcm²]	0.148
307.417	J	[kgcm²]	0.115
347.083	J	[kgcm²]	0.113
386.467	J	[kgcm²]	0.077
436.333	J	[kgcm²]	0.076
497.722	J	[kgcm²]	0.053
561.944	J	[kgcm²]	0.052
630.803	J	[kgcm²]	0.035
712.197	J	[kgcm²]	0.034
790.500	J	[kgcm²]	0.024
892.500	J	[kgcm²]	0.024
1041.452	J	[kgcm²]	0.015
1175.833	J	[kgcm²]	0.015

Gearbox			GSS06
126.531	J	[kgcm²]	0.310
142.857	J	[kgcm²]	0.298
155.000	J	[kgcm²]	0.271
175.000	J	[kgcm²]	0.263
194.857	J	[kgcm²]	0.144
220.000	J	[kgcm²]	0.139
238.700	J	[kgcm²]	0.128
269.500	J	[kgcm²]	0.124
310.689	J	[kgcm²]	0.112
350.778	J	[kgcm²]	0.110
386.467	J	[kgcm²]	0.103
436.333	J	[kgcm²]	0.102
497.722	J	[kgcm²]	0.069
561.944	J	[kgcm²]	0.068
630.803	J	[kgcm²]	0.045
712.197	J	[kgcm²]	0.044
816.333	J	[kgcm²]	0.042
921.667	J	[kgcm²]	0.042
1023.000	J	[kgcm²]	0.029
1155.000	J	[kgcm²]	0.029
1241.550	J	[kgcm²]	0.028
1401.750	J	[kgcm²]	0.028
1635.693	J	[kgcm²]	0.017
1846.750	J	[kgcm²]	0.017

► The moments of inertia relate to the drive shaft of the gearbox.
► The total moment of inertia is calculated by adding the values of the gearbox, motor and accessories.



Moments of inertia

GSS□□-3

► Moment of inertia (J) depending on ratio i

Gearbox			GSS07
126.531	J	[kgcm²]	0.857
142.857	J	[kgcm²]	0.822
155.000	J	[kgcm²]	0.742
175.000	J	[kgcm²]	0.719
201.746	J	[kgcm²]	0.372
227.778	J	[kgcm²]	0.358
247.139	J	[kgcm²]	0.327
279.028	J	[kgcm²]	0.317
321.673	J	[kgcm²]	0.281
363.179	J	[kgcm²]	0.276
394.245	J	[kgcm²]	0.258
445.116	J	[kgcm²]	0.255
490.403	J	[kgcm²]	0.183
553.681	J	[kgcm²]	0.181
634.639	J	[kgcm²]	0.114
716.528	J	[kgcm²]	0.113
833.556	J	[kgcm²]	0.105
941.111	J	[kgcm²]	0.105
1011.633	J	[kgcm²]	0.076
1142.167	J	[kgcm²]	0.076
1227.755	J	[kgcm²]	0.074
1386.175	J	[kgcm²]	0.073
1569.181	J	[kgcm²]	0.047
1771.656	J	[kgcm²]	0.047

► The moments of inertia relate to the drive shaft of the gearbox.
► The total moment of inertia is calculated by adding the values of the gearbox, motor and accessories.



Efficiencies

► During start-up, the start-up efficiency η_a of a helical-worm gearbox is lower than its operative efficiency at rated speed.
The start-up efficiency η_a must therefore always be considered when starting under load.

GSS04-2

				n_2 [r/min]											
				10	16	25	32	40	63	100	160	250	400	630	800
5.639	η_a	0.71	$\eta_{c=1}$	0.83	0.86	0.88	0.89	0.89	0.90	0.90	0.90	0.90	0.90	0.89	0.89
7.733	η_a	0.71	$\eta_{c=1}$	0.83	0.86	0.88	0.89	0.89	0.90	0.90	0.90	0.90	0.90	0.89	0.89
9.042	η_a	0.67	$\eta_{c=1}$	0.81	0.84	0.86	0.87	0.87	0.88	0.88	0.87	0.87	0.87	0.87	
9.897	η_a	0.71	$\eta_{c=1}$	0.83	0.86	0.88	0.89	0.89	0.90	0.90	0.90	0.90	0.90	0.89	0.89
10.827	η_a	0.71	$\eta_{c=1}$	0.83	0.86	0.88	0.89	0.89	0.90	0.90	0.90	0.90	0.90	0.89	0.89
12.400	η_a	0.67	$\eta_{c=1}$	0.81	0.84	0.86	0.87	0.87	0.88	0.88	0.87	0.87	0.87	0.87	
13.810	η_a	0.71	$\eta_{c=1}$	0.83	0.86	0.88	0.89	0.89	0.90	0.90	0.90	0.90	0.90	0.89	0.89
15.869	η_a	0.67	$\eta_{c=1}$	0.81	0.84	0.86	0.87	0.87	0.88	0.88	0.87	0.87	0.87	0.87	
17.360	η_a	0.67	$\eta_{c=1}$	0.81	0.84	0.86	0.87	0.87	0.88	0.88	0.87	0.87	0.87	0.87	
20.417	η_a	0.55	$\eta_{c=1}$	0.76	0.78	0.79	0.79	0.79	0.79	0.79	0.78	0.78			
22.143	η_a	0.67	$\eta_{c=1}$	0.81	0.84	0.86	0.87	0.87	0.88	0.88	0.87	0.87	0.87	0.87	
24.800	η_a	0.56	$\eta_{c=1}$	0.77	0.79	0.80	0.81	0.81	0.81	0.80	0.80	0.79			
27.125	η_a	0.67	$\eta_{c=1}$	0.81	0.84	0.86	0.87	0.87	0.88	0.88	0.87	0.87	0.87	0.87	
31.738	η_a	0.56	$\eta_{c=1}$	0.77	0.79	0.80	0.81	0.81	0.81	0.80	0.80	0.79			
34.100	η_a	0.67	$\eta_{c=1}$	0.81	0.84	0.86	0.87	0.87	0.88	0.88	0.87	0.87	0.87	0.87	
39.200	η_a	0.55	$\eta_{c=1}$	0.76	0.78	0.79	0.79	0.79	0.79	0.79	0.78	0.78			
43.917	η_a	0.67	$\eta_{c=1}$	0.81	0.84	0.86	0.87	0.87	0.88	0.88	0.87	0.87	0.87	0.87	
50.000	η_a	0.55	$\eta_{c=1}$	0.76	0.78	0.79	0.79	0.79	0.79	0.79	0.78	0.78			
54.250	η_a	0.56	$\eta_{c=1}$	0.77	0.79	0.80	0.81	0.81	0.81	0.80	0.80	0.79			
61.250	η_a	0.55	$\eta_{c=1}$	0.76	0.78	0.79	0.79	0.79	0.79	0.79	0.78	0.78			
68.200	η_a	0.56	$\eta_{c=1}$	0.77	0.79	0.80	0.81	0.81	0.81	0.80	0.80	0.79			
77.000	η_a	0.55	$\eta_{c=1}$	0.76	0.78	0.79	0.79	0.79	0.79	0.79	0.78	0.78			
87.833	η_a	0.56	$\eta_{c=1}$	0.77	0.79	0.80	0.81	0.81	0.81	0.80	0.80	0.79			
99.167	η_a	0.55	$\eta_{c=1}$	0.76	0.78	0.79	0.79	0.79	0.79	0.79	0.78	0.78			
111.318	η_a	0.56	$\eta_{c=1}$	0.77	0.79	0.80	0.81	0.81	0.81	0.80	0.80	0.79			
125.682	η_a	0.55	$\eta_{c=1}$	0.76	0.78	0.79	0.79	0.79	0.79	0.79	0.78	0.78			
139.500	η_a	0.56	$\eta_{c=1}$	0.77	0.79	0.80	0.81	0.81	0.81	0.80	0.80	0.79			
157.500	η_a	0.55	$\eta_{c=1}$	0.76	0.78	0.79	0.79	0.79	0.79	0.79	0.78	0.78			
183.786	η_a	0.56	$\eta_{c=1}$	0.77	0.79	0.80	0.81	0.81	0.81	0.80	0.80	0.79			
207.500	η_a	0.55	$\eta_{c=1}$	0.76	0.78	0.79	0.79	0.79	0.79	0.79	0.78	0.78			



Efficiencies

► During start-up, the start-up efficiency η_a of a helical-worm gearbox is lower than its operative efficiency at rated speed.
The start-up efficiency η_a must therefore always be considered when starting under load.

GSS05-2

				n_2 [r/min]											
				10	16	25	32	40	63	100	160	250	400	630	800
5.639	η_a	0.71	$\eta_{c=1}$	0.85	0.87	0.89	0.90	0.90	0.91	0.91	0.91	0.91	0.90	0.90	0.90
7.733	η_a	0.71	$\eta_{c=1}$	0.85	0.87	0.89	0.90	0.90	0.91	0.91	0.91	0.91	0.90	0.90	0.90
9.042	η_a	0.67	$\eta_{c=1}$	0.83	0.86	0.87	0.88	0.88	0.89	0.89	0.88	0.88	0.88	0.88	
9.897	η_a	0.71	$\eta_{c=1}$	0.85	0.87	0.89	0.90	0.90	0.91	0.91	0.91	0.91	0.90	0.90	0.90
10.827	η_a	0.71	$\eta_{c=1}$	0.85	0.87	0.89	0.90	0.90	0.91	0.91	0.91	0.91	0.90	0.90	0.90
12.400	η_a	0.67	$\eta_{c=1}$	0.83	0.86	0.87	0.88	0.88	0.89	0.89	0.88	0.88	0.88	0.88	
13.810	η_a	0.71	$\eta_{c=1}$	0.85	0.87	0.89	0.90	0.90	0.91	0.91	0.91	0.91	0.90	0.90	0.90
15.869	η_a	0.67	$\eta_{c=1}$	0.83	0.86	0.87	0.88	0.88	0.89	0.89	0.88	0.88	0.88	0.88	
17.360	η_a	0.67	$\eta_{c=1}$	0.83	0.86	0.87	0.88	0.88	0.89	0.89	0.88	0.88	0.88	0.88	
20.417	η_a	0.55	$\eta_{c=1}$	0.79	0.80	0.81	0.81	0.81	0.81	0.81	0.81	0.81			
22.143	η_a	0.67	$\eta_{c=1}$	0.83	0.86	0.87	0.88	0.88	0.89	0.89	0.88	0.88	0.88	0.88	
24.800	η_a	0.57	$\eta_{c=1}$	0.79	0.81	0.82	0.82	0.83	0.83	0.82	0.82	0.82			
27.125	η_a	0.67	$\eta_{c=1}$	0.83	0.86	0.87	0.88	0.88	0.89	0.89	0.88	0.88	0.88	0.88	
31.738	η_a	0.57	$\eta_{c=1}$	0.79	0.81	0.82	0.82	0.83	0.83	0.82	0.82	0.82			
35.306	η_a	0.67	$\eta_{c=1}$	0.83	0.86	0.87	0.88	0.88	0.89	0.89	0.88	0.88	0.88	0.88	
39.200	η_a	0.55	$\eta_{c=1}$	0.79	0.80	0.81	0.81	0.81	0.81	0.81	0.81	0.81			
43.917	η_a	0.67	$\eta_{c=1}$	0.83	0.86	0.87	0.88	0.88	0.89	0.89	0.88	0.88	0.88	0.88	
50.000	η_a	0.55	$\eta_{c=1}$	0.79	0.80	0.81	0.81	0.81	0.81	0.81	0.81	0.81			
54.250	η_a	0.57	$\eta_{c=1}$	0.79	0.81	0.82	0.82	0.83	0.83	0.82	0.82	0.82			
61.250	η_a	0.55	$\eta_{c=1}$	0.79	0.80	0.81	0.81	0.81	0.81	0.81	0.81	0.81			
70.611	η_a	0.57	$\eta_{c=1}$	0.79	0.81	0.82	0.82	0.83	0.83	0.82	0.82	0.82			
79.722	η_a	0.55	$\eta_{c=1}$	0.79	0.80	0.81	0.81	0.81	0.81	0.81	0.81	0.81			
87.833	η_a	0.57	$\eta_{c=1}$	0.79	0.81	0.82	0.82	0.83	0.83	0.82	0.82	0.82			
99.167	η_a	0.55	$\eta_{c=1}$	0.79	0.80	0.81	0.81	0.81	0.81	0.81	0.81	0.81			
113.667	η_a	0.57	$\eta_{c=1}$	0.79	0.81	0.82	0.82	0.83	0.83	0.82	0.82	0.82			
128.333	η_a	0.55	$\eta_{c=1}$	0.79	0.80	0.81	0.81	0.81	0.81	0.81	0.81	0.81			
137.950	η_a	0.57	$\eta_{c=1}$	0.79	0.81	0.82	0.82	0.83	0.83	0.82	0.82	0.82			
155.750	η_a	0.55	$\eta_{c=1}$	0.79	0.80	0.81	0.81	0.81	0.81	0.81	0.81	0.81			
176.313	η_a	0.57	$\eta_{c=1}$	0.79	0.81	0.82	0.82	0.83	0.83	0.82	0.82	0.82			
199.063	η_a	0.55	$\eta_{c=1}$	0.79	0.80	0.81	0.81	0.81	0.81	0.81	0.81	0.81			



Efficiencies

► During start-up, the start-up efficiency η_a of a helical-worm gearbox is lower than its operative efficiency at rated speed.
The start-up efficiency η_a must therefore always be considered when starting under load.

GSS05-3

				n_2 [r/min]										
				10	16	25	32	40	63	100	160	250	400	630
125.476	η_a	0.67	$\eta_{c=1}$	0.83	0.86	0.87	0.88	0.88	0.89	0.89	0.88	0.88	0.88	0.88
153.708	η_a	0.67	$\eta_{c=1}$	0.83	0.86	0.87	0.88	0.88	0.89	0.89	0.88	0.88	0.88	0.88
193.233	η_a	0.67	$\eta_{c=1}$	0.83	0.86	0.87	0.88	0.88	0.89	0.89	0.88	0.88	0.88	0.88
222.133	η_a	0.55	$\eta_{c=1}$	0.79	0.80	0.81	0.81	0.81	0.81	0.81	0.81	0.81		
250.952	η_a	0.57	$\eta_{c=1}$	0.79	0.81	0.82	0.82	0.83	0.83	0.82	0.82	0.82		
283.333	η_a	0.55	$\eta_{c=1}$	0.79	0.80	0.81	0.81	0.81	0.81	0.81	0.81	0.81		
307.417	η_a	0.57	$\eta_{c=1}$	0.79	0.81	0.82	0.82	0.83	0.83	0.82	0.82	0.82		
347.083	η_a	0.55	$\eta_{c=1}$	0.79	0.80	0.81	0.81	0.81	0.81	0.81	0.81	0.81		
386.467	η_a	0.57	$\eta_{c=1}$	0.79	0.81	0.82	0.82	0.83	0.83	0.82	0.82	0.82		
436.333	η_a	0.55	$\eta_{c=1}$	0.79	0.80	0.81	0.81	0.81	0.81	0.81	0.81	0.81		
497.722	η_a	0.57	$\eta_{c=1}$	0.79	0.81	0.82	0.82	0.83	0.83	0.82	0.82	0.82		
561.945	η_a	0.55	$\eta_{c=1}$	0.79	0.80	0.81	0.81	0.81	0.81	0.81	0.81	0.81		
630.803	η_a	0.57	$\eta_{c=1}$	0.79	0.81	0.82	0.82	0.83	0.83	0.82	0.82	0.82		
712.197	η_a	0.55	$\eta_{c=1}$	0.79	0.80	0.81	0.81	0.81	0.81	0.81	0.81	0.81		



Efficiencies

► During start-up, the start-up efficiency η_a of a helical-worm gearbox is lower than its operative efficiency at rated speed.
The start-up efficiency η_a must therefore always be considered when starting under load.

GSS06-2

				n_2 [r/min]											
				10	16	25	32	40	63	100	160	250	400	630	800
5.833	η_a	0.72	$\eta_{c=1}$	0.87	0.89	0.90	0.91	0.91	0.91	0.92	0.92	0.92	0.91	0.91	0.91
8.000	η_a	0.72	$\eta_{c=1}$	0.87	0.89	0.90	0.91	0.91	0.91	0.92	0.92	0.92	0.91	0.91	0.91
9.042	η_a	0.67	$\eta_{c=1}$	0.85	0.87	0.88	0.89	0.89	0.89	0.89	0.89	0.89	0.89	0.89	
10.238	η_a	0.72	$\eta_{c=1}$	0.87	0.89	0.90	0.91	0.91	0.91	0.92	0.92	0.92	0.91	0.91	0.91
11.200	η_a	0.72	$\eta_{c=1}$	0.87	0.89	0.90	0.91	0.91	0.91	0.92	0.92	0.92	0.91	0.91	0.91
12.400	η_a	0.67	$\eta_{c=1}$	0.85	0.87	0.88	0.89	0.89	0.89	0.89	0.89	0.89	0.89	0.89	0.80
14.286	η_a	0.72	$\eta_{c=1}$	0.89	0.90	0.91	0.91	0.91	0.92	0.92	0.92	0.91	0.91	0.91	
15.869	η_a	0.67	$\eta_{c=1}$	0.85	0.87	0.88	0.89	0.89	0.89	0.89	0.89	0.89	0.89	0.89	
17.360	η_a	0.67	$\eta_{c=1}$	0.85	0.87	0.88	0.89	0.89	0.89	0.89	0.89	0.89	0.89	0.89	
20.417	η_a	0.57	$\eta_{c=1}$	0.81	0.82	0.83	0.83	0.83	0.83	0.83	0.83	0.83			
22.143	η_a	0.67	$\eta_{c=1}$	0.85	0.87	0.88	0.89	0.89	0.89	0.89	0.89	0.89	0.89	0.89	
24.800	η_a	0.57	$\eta_{c=1}$	0.81	0.83	0.83	0.83	0.83	0.83	0.83	0.83	0.83			
27.125	η_a	0.67	$\eta_{c=1}$	0.85	0.87	0.88	0.89	0.89	0.89	0.89	0.89	0.89	0.89	0.89	
31.738	η_a	0.57	$\eta_{c=1}$	0.81	0.83	0.83	0.83	0.83	0.83	0.83	0.83	0.83			
35.306	η_a	0.67	$\eta_{c=1}$	0.85	0.87	0.88	0.89	0.89	0.89	0.89	0.89	0.89	0.89	0.89	
39.200	η_a	0.57	$\eta_{c=1}$	0.81	0.82	0.83	0.83	0.83	0.83	0.83	0.83	0.83			
43.917	η_a	0.67	$\eta_{c=1}$	0.85	0.87	0.88	0.89	0.89	0.89	0.89	0.89	0.89	0.89	0.89	
50.000	η_a	0.57	$\eta_{c=1}$	0.81	0.82	0.83	0.83	0.83	0.83	0.83	0.83	0.83			
54.250	η_a	0.57	$\eta_{c=1}$	0.81	0.83	0.83	0.83	0.83	0.83	0.83	0.83	0.83			
61.250	η_a	0.57	$\eta_{c=1}$	0.81	0.82	0.83	0.83	0.83	0.83	0.83	0.83	0.83			
70.611	η_a	0.57	$\eta_{c=1}$	0.81	0.83	0.83	0.83	0.83	0.83	0.83	0.83	0.83			
79.722	η_a	0.57	$\eta_{c=1}$	0.81	0.82	0.83	0.83	0.83	0.83	0.83	0.83	0.83			
87.833	η_a	0.57	$\eta_{c=1}$	0.81	0.83	0.83	0.83	0.83	0.83	0.83	0.83	0.83			
99.167	η_a	0.57	$\eta_{c=1}$	0.81	0.82	0.83	0.83	0.83	0.83	0.83	0.83	0.83			
113.667	η_a	0.57	$\eta_{c=1}$	0.81	0.83	0.83	0.83	0.83	0.83	0.83	0.83	0.83			
128.333	η_a	0.57	$\eta_{c=1}$	0.81	0.82	0.83	0.83	0.83	0.83	0.83	0.83	0.83			
137.950	η_a	0.57	$\eta_{c=1}$	0.81	0.83	0.83	0.83	0.83	0.83	0.83	0.83	0.83			
155.750	η_a	0.57	$\eta_{c=1}$	0.81	0.82	0.83	0.83	0.83	0.83	0.83	0.83	0.83			
174.375	η_a	0.57	$\eta_{c=1}$	0.81	0.83	0.83	0.83	0.83	0.83	0.83	0.83	0.83			
196.875	η_a	0.57	$\eta_{c=1}$	0.81	0.82	0.83	0.83	0.83	0.83	0.83	0.83	0.83			



Efficiencies

► During start-up, the start-up efficiency η_a of a helical-worm gearbox is lower than its operative efficiency at rated speed.
The start-up efficiency η_a must therefore always be considered when starting under load.

GSS06-3

				n_2 [r/min]											
				10	16	25	32	40	63	100	160	250	400	630	800
126.531	η_a	0.57	$\eta_{c=1}$	0.81	0.83	0.83	0.83	0.83	0.83	0.83	0.83	0.83	0.91	0.91	0.91
142.857	η_a	0.57	$\eta_{c=1}$	0.81	0.82	0.83	0.83	0.83	0.83	0.83	0.83	0.83			
155.000	η_a	0.57	$\eta_{c=1}$	0.81	0.83	0.83	0.83	0.83	0.83	0.83	0.83	0.83			
175.000	η_a	0.57	$\eta_{c=1}$	0.81	0.82	0.83	0.83	0.83	0.83	0.83	0.83	0.83			
194.857	η_a	0.57	$\eta_{c=1}$	0.81	0.83	0.83	0.83	0.83	0.83	0.83	0.83	0.83			
220.000	η_a	0.57	$\eta_{c=1}$	0.81	0.82	0.83	0.83	0.83	0.83	0.83	0.83	0.83			
238.700	η_a	0.57	$\eta_{c=1}$	0.81	0.83	0.83	0.83	0.83	0.83	0.83	0.83	0.83			
269.500	η_a	0.57	$\eta_{c=1}$	0.81	0.82	0.83	0.83	0.83	0.83	0.83	0.83	0.83			
310.689	η_a	0.57	$\eta_{c=1}$	0.81	0.83	0.83	0.83	0.83	0.83	0.83	0.83	0.83			
350.778	η_a	0.57	$\eta_{c=1}$	0.81	0.82	0.83	0.83	0.83	0.83	0.83	0.83	0.83			
386.467	η_a	0.57	$\eta_{c=1}$	0.81	0.83	0.83	0.83	0.83	0.83	0.83	0.83	0.83			
436.333	η_a	0.57	$\eta_{c=1}$	0.81	0.82	0.83	0.83	0.83	0.83	0.83	0.83	0.83			
497.722	η_a	0.57	$\eta_{c=1}$	0.81	0.83	0.83	0.83	0.83	0.83	0.83	0.83	0.83			
561.945	η_a	0.57	$\eta_{c=1}$	0.81	0.82	0.83	0.83	0.83	0.83	0.83	0.83	0.83			
630.803	η_a	0.57	$\eta_{c=1}$	0.81	0.83	0.83	0.83	0.83	0.83	0.83	0.83	0.83			
712.197	η_a	0.57	$\eta_{c=1}$	0.81	0.82	0.83	0.83	0.83	0.83	0.83	0.83	0.83			
816.333	η_a	0.57	$\eta_{c=1}$	0.81	0.83	0.83	0.83	0.83	0.83	0.83	0.83	0.83			
921.667	η_a	0.57	$\eta_{c=1}$	0.81	0.82	0.83	0.83	0.83	0.83	0.83	0.83	0.83			
1023.000	η_a	0.57	$\eta_{c=1}$	0.81	0.83	0.83	0.83	0.83	0.83	0.83	0.83	0.83			
1155.000	η_a	0.57	$\eta_{c=1}$	0.81	0.82	0.83	0.83	0.83	0.83	0.83	0.83	0.83			
1241.550	η_a	0.57	$\eta_{c=1}$	0.81	0.83	0.83	0.83	0.83	0.83	0.83	0.83	0.83			
1401.750	η_a	0.57	$\eta_{c=1}$	0.81	0.82	0.83	0.83	0.83	0.83	0.83	0.83	0.83			
1635.693	η_a	0.57	$\eta_{c=1}$	0.81	0.83	0.83	0.83	0.83	0.83	0.83	0.83	0.83			
1846.750	η_a	0.57	$\eta_{c=1}$	0.81	0.82	0.83	0.83	0.83	0.83	0.83	0.83	0.83			



Efficiencies

► During start-up, the start-up efficiency η_a of a helical-worm gearbox is lower than its operative efficiency at rated speed.
The start-up efficiency η_a must therefore always be considered when starting under load.

GSS07-2

				n_2 [r/min]											
				10	16	25	32	40	63	100	160	250	400	630	800
5.862	η_a	0.74	$\eta_{c=1}$	0.89	0.91	0.92	0.92	0.92	0.92	0.92	0.92	0.92	0.92	0.92	0.92
8.125	η_a	0.74	$\eta_{c=1}$	0.89	0.91	0.92	0.92	0.92	0.92	0.92	0.92	0.92	0.92	0.92	0.92
9.086	η_a	0.69	$\eta_{c=1}$	0.88	0.89	0.90	0.90	0.90	0.90	0.90	0.90	0.90	0.90	0.90	
10.000	η_a	0.74	$\eta_{c=1}$	0.89	0.91	0.92	0.92	0.92	0.92	0.92	0.92	0.92	0.92	0.92	0.92
11.200	η_a	0.74	$\eta_{c=1}$	0.89	0.91	0.92	0.92	0.92	0.92	0.92	0.92	0.92	0.92	0.92	0.92
12.594	η_a	0.69	$\eta_{c=1}$	0.88	0.89	0.90	0.90	0.90	0.90	0.90	0.90	0.90	0.90	0.90	
14.286	η_a	0.74	$\eta_{c=1}$	0.89	0.91	0.92	0.92	0.92	0.92	0.92	0.92	0.92	0.92	0.92	0.92
15.500	η_a	0.69	$\eta_{c=1}$	0.88	0.89	0.90	0.90	0.90	0.90	0.90	0.90	0.90	0.90	0.90	
17.360	η_a	0.69	$\eta_{c=1}$	0.88	0.89	0.90	0.90	0.90	0.90	0.90	0.90	0.90	0.90	0.90	
20.517	η_a	0.60	$\eta_{c=1}$	0.84	0.84	0.85	0.85	0.85	0.85	0.85	0.85	0.85			
22.143	η_a	0.69	$\eta_{c=1}$	0.88	0.89	0.90	0.90	0.90	0.90	0.90	0.90	0.90	0.90	0.90	
25.188	η_a	0.60	$\eta_{c=1}$	0.84	0.85	0.85	0.85	0.85	0.85	0.85	0.85	0.85			
27.125	η_a	0.69	$\eta_{c=1}$	0.88	0.89	0.90	0.90	0.90	0.90	0.90	0.90	0.90	0.90	0.90	
31.000	η_a	0.60	$\eta_{c=1}$	0.84	0.85	0.85	0.85	0.85	0.85	0.85	0.85	0.85			
35.306	η_a	0.69	$\eta_{c=1}$	0.88	0.89	0.90	0.90	0.90	0.90	0.90	0.90	0.90	0.90	0.90	
39.200	η_a	0.60	$\eta_{c=1}$	0.84	0.84	0.85	0.85	0.85	0.85	0.85	0.85	0.85			
43.271	η_a	0.69	$\eta_{c=1}$	0.88	0.89	0.90	0.90	0.90	0.90	0.90	0.90	0.90	0.90	0.90	
50.000	η_a	0.60	$\eta_{c=1}$	0.84	0.84	0.85	0.85	0.85	0.85	0.85	0.85	0.85			
54.250	η_a	0.60	$\eta_{c=1}$	0.84	0.85	0.85	0.85	0.85	0.85	0.85	0.85	0.85			
61.250	η_a	0.60	$\eta_{c=1}$	0.84	0.84	0.85	0.85	0.85	0.85	0.85	0.85	0.85			
70.611	η_a	0.60	$\eta_{c=1}$	0.84	0.85	0.85	0.85	0.85	0.85	0.85	0.85	0.85			
79.722	η_a	0.60	$\eta_{c=1}$	0.84	0.84	0.85	0.85	0.85	0.85	0.85	0.85	0.85			
86.542	η_a	0.60	$\eta_{c=1}$	0.84	0.85	0.85	0.85	0.85	0.85	0.85	0.85	0.85			
97.708	η_a	0.60	$\eta_{c=1}$	0.84	0.84	0.85	0.85	0.85	0.85	0.85	0.85	0.85			
113.667	η_a	0.60	$\eta_{c=1}$	0.84	0.85	0.85	0.85	0.85	0.85	0.85	0.85	0.85			
128.333	η_a	0.60	$\eta_{c=1}$	0.84	0.84	0.85	0.85	0.85	0.85	0.85	0.85	0.85			
137.950	η_a	0.60	$\eta_{c=1}$	0.84	0.85	0.85	0.85	0.85	0.85	0.85	0.85	0.85			
155.750	η_a	0.60	$\eta_{c=1}$	0.84	0.84	0.85	0.85	0.85	0.85	0.85	0.85	0.85			
174.375	η_a	0.60	$\eta_{c=1}$	0.84	0.85	0.85	0.85	0.85	0.85	0.85	0.85	0.85			
196.875	η_a	0.60	$\eta_{c=1}$	0.84	0.84	0.85	0.85	0.85	0.85	0.85	0.85	0.85			



Efficiencies

► During start-up, the start-up efficiency η_a of a helical-worm gearbox is lower than its operative efficiency at rated speed.
The start-up efficiency η_a must therefore always be considered when starting under load.

GSS07-3

				n_2 [r/min]								
				10	16	25	32	40	63	100	160	250
126.531	η_a	0.60	$\eta_{c=1}$	0.84	0.85	0.85	0.85	0.85	0.85	0.85	0.85	0.85
142.857	η_a	0.60	$\eta_{c=1}$	0.84	0.84	0.85	0.85	0.85	0.85	0.85	0.85	0.85
155.000	η_a	0.60	$\eta_{c=1}$	0.84	0.85	0.85	0.85	0.85	0.85	0.85	0.85	0.85
175.000	η_a	0.60	$\eta_{c=1}$	0.84	0.84	0.85	0.85	0.85	0.85	0.85	0.85	0.85
201.746	η_a	0.60	$\eta_{c=1}$	0.84	0.85	0.85	0.85	0.85	0.85	0.85	0.85	0.85
227.778	η_a	0.60	$\eta_{c=1}$	0.84	0.84	0.85	0.85	0.85	0.85	0.85	0.85	0.85
247.139	η_a	0.60	$\eta_{c=1}$	0.84	0.85	0.85	0.85	0.85	0.85	0.85	0.85	0.85
279.028	η_a	0.60	$\eta_{c=1}$	0.84	0.84	0.85	0.85	0.85	0.85	0.85	0.85	0.85
321.673	η_a	0.60	$\eta_{c=1}$	0.84	0.85	0.85	0.85	0.85	0.85	0.85	0.85	0.85
363.179	η_a	0.60	$\eta_{c=1}$	0.84	0.84	0.85	0.85	0.85	0.85	0.85	0.85	0.85
394.245	η_a	0.60	$\eta_{c=1}$	0.84	0.85	0.85	0.85	0.85	0.85	0.85	0.85	0.85
445.116	η_a	0.60	$\eta_{c=1}$	0.84	0.84	0.85	0.85	0.85	0.85	0.85	0.85	0.85
490.403	η_a	0.60	$\eta_{c=1}$	0.84	0.85	0.85	0.85	0.85	0.85	0.85	0.85	0.85
553.681	η_a	0.60	$\eta_{c=1}$	0.84	0.84	0.85	0.85	0.85	0.85	0.85	0.85	0.85
634.639	η_a	0.60	$\eta_{c=1}$	0.84	0.85	0.85	0.85	0.85	0.85	0.85	0.85	0.85
716.528	η_a	0.60	$\eta_{c=1}$	0.84	0.84	0.85	0.85	0.85	0.85	0.85	0.85	0.85
833.556	η_a	0.60	$\eta_{c=1}$	0.84	0.85	0.85	0.85	0.85	0.85	0.85	0.85	0.85
941.111	η_a	0.60	$\eta_{c=1}$	0.84	0.84	0.85	0.85	0.85	0.85	0.85	0.85	0.85
1011.633	η_a	0.60	$\eta_{c=1}$	0.84	0.85	0.85	0.85	0.85	0.85	0.85	0.85	0.85
1142.167	η_a	0.60	$\eta_{c=1}$	0.84	0.84	0.85	0.85	0.85	0.85	0.85	0.85	0.85
1227.755	η_a	0.60	$\eta_{c=1}$	0.84	0.85	0.85	0.85	0.85	0.85	0.85	0.85	0.85
1386.175	η_a	0.60	$\eta_{c=1}$	0.84	0.84	0.85	0.85	0.85	0.85	0.85	0.85	0.85
1569.181	η_a	0.60	$\eta_{c=1}$	0.84	0.85	0.85	0.85	0.85	0.85	0.85	0.85	0.85
1771.656	η_a	0.60	$\eta_{c=1}$	0.84	0.84	0.85	0.85	0.85	0.85	0.85	0.85	0.85



Weights

GSS□□-2M HAR / HBR

			063C11 063C12 063C31 063C32	063C42	071C11	071C13 071C31	071C32	071C33 071C42	080C13 080C32 080C33	090C12
GSS04	m	[kg]	16		18				23	29
GSS05	m	[kg]		26	27	28	27	28	32	38
GSS06	m	[kg]		38		40	39	40	45	51
GSS07	m	[kg]							70	76

			090C32	100C12	100C32	112C22	132C12	132C22	160C22	160C32
GSS04	m	[kg]	31							
GSS05	m	[kg]	40	46	49					
GSS06	m	[kg]	53	59	61	74	96	103		
GSS07	m	[kg]	78	84	86	99	122	129	172	187

GSS□□-2M HAK

			063C11 063C12 063C31 063C32	063C42	071C11	071C13 071C31	071C32	071C33 071C42	080C13 080C32 080C33	090C12
GSS04	m	[kg]	18	19	20	21	20	21	26	31
GSS05	m	[kg]		30	31	32	31	32	36	42
GSS06	m	[kg]		45		47	46	47	52	58
GSS07	m	[kg]							81	87

			090C32	100C12	100C32	112C22	132C12	132C22	160C22	160C32
GSS04	m	[kg]	33							
GSS05	m	[kg]	44	50	53					
GSS06	m	[kg]	60	66	68	81	103	110		
GSS07	m	[kg]	89	95	97	110	133	140	183	198

► Weights with oil filling for mounting position A; all values are approximate.
The weights relate to the basic version. Bear in mind that additional weights may be needed, e.g. for motor options.



Weights

GSS□□-2M VAR / VBR

			063C11 063C12 063C31 063C32	063C42	071C11	071C13 071C31	071C32	071C33	071C42	080C13 080C32 080C33	090C12
GSS04	m	[kg]	16	17	18	19	18	19		24	29
GSS05	m	[kg]		27	28	29	28	29		33	39
GSS06	m	[kg]		40		43	42	43	42	47	53
GSS07	m	[kg]								75	81

			090C32	100C12	100C32	112C22	132C12	132C22	160C22	160C32
GSS04	m	[kg]	31							
GSS05	m	[kg]	41	47	50					
GSS06	m	[kg]	55	61	64	77	99	106		
GSS07	m	[kg]	83	89	91	104	127	134	177	192

GSS□□-2M VAK

			063C11 063C12 063C31 063C32	063C42	071C11	071C13 071C31	071C32	071C33	071C42	080C13 080C32 080C33	090C12
GSS04	m	[kg]	19		21					26	32
GSS05	m	[kg]		31	32	33	32	33		37	43
GSS06	m	[kg]		47		50	49	50	49	54	60
GSS07	m	[kg]								86	92

			090C32	100C12	100C32	112C22	132C12	132C22	160C22	160C32
GSS04	m	[kg]	34							
GSS05	m	[kg]	45	51	54					
GSS06	m	[kg]	62	68	71	84	106	113		
GSS07	m	[kg]	94	100	102	115	138	145	188	203

► Weights with oil filling for mounting position A; all values are approximate.
The weights relate to the basic version. Bear in mind that additional weights may be needed, e.g. for motor options.



Weights

GSS□□-2M SAR / SBR

			063C11 063C12 063C31 063C32	063C42	071C11	071C13 071C31	071C32	071C33 071C42	080C13 080C32 080C33	090C12
GSS04	m	[kg]	16	17	18	19	18	19	24	29
GSS05	m	[kg]		26	28	29	28	29	33	39
GSS06	m	[kg]		39		41	40	41	46	52
GSS07	m	[kg]							71	77

			090C32	100C12	100C32	112C22	132C12	132C22	160C22	160C32
GSS04	m	[kg]	31							
GSS05	m	[kg]	41	47	50					
GSS06	m	[kg]	54	60	62	75	97	104		
GSS07	m	[kg]	79	85	88	101	123	130	173	188

GSS□□-2M SAK

			063C11 063C12 063C31 063C32	063C42	071C11	071C13 071C31	071C32	071C33 071C42	080C13 080C32 080C33	090C12
GSS04	m	[kg]	19		21				26	32
GSS05	m	[kg]		30	32	33	32	33	37	43
GSS06	m	[kg]		46		48	47	48	53	59
GSS07	m	[kg]							82	88

			090C32	100C12	100C32	112C22	132C12	132C22	160C22	160C32
GSS04	m	[kg]	34							
GSS05	m	[kg]	45	51	54					
GSS06	m	[kg]	61	67	69	82	104	111		
GSS07	m	[kg]	90	96	99	112	134	141	184	199

► Weights with oil filling for mounting position A; all values are approximate.
The weights relate to the basic version. Bear in mind that additional weights may be needed, e.g. for motor options.



Weights

GSS□□-3M HAR / HBR

			063C11 063C12 063C31 063C32	063C42	071C11	071C13 071C31	071C32	071C33	071C42	080C13	080C32 080C33	090C12	090C32	100C12
GSS05	m	[kg]	26		28	29	28	29	28	34				
GSS06	m	[kg]	41	42	43	44	43	44		49		54		
GSS07	m	[kg]		71	73		72	73		78		83	85	91

GSS□□-3M HAK

			063C11 063C12 063C31 063C32	063C42	071C11	071C13 071C31	071C32	071C33	071C42	080C13	080C32 080C33	090C12	090C32	100C12
GSS05	m	[kg]	30		32	33	32	33	32	38				
GSS06	m	[kg]	48	49	50	51	50	51		56		61		
GSS07	m	[kg]		82	84		83	84		89		94	96	102

► Weights with oil filling for mounting position A; all values are approximate.
The weights relate to the basic version. Bear in mind that additional weights may be needed, e.g. for motor options.



Weights

GSS□□-3M VAR / VBR

			063C11 063C12	063C31	063C32	063C42	071C11	071C13 071C31	071C32
GSS05	m	[kg]	27				29	30	29
GSS06	m	[kg]	44	43	44		46		
GSS07	m	[kg]				76	78		77

			071C33	071C42	080C13	080C32 080C33	090C12	090C32	100C12
GSS05	m	[kg]	30	29	35				
GSS06	m	[kg]	46		51		57		
GSS07	m	[kg]	78		83		88	90	96

GSS□□-3M VAK

			063C11 063C12	063C31	063C32	063C42	071C11	071C13 071C31	071C32
GSS05	m	[kg]	31				33	34	33
GSS06	m	[kg]	51	50	51		53		
GSS07	m	[kg]				87	89		88

			071C33	071C42	080C13	080C32 080C33	090C12	090C32	100C12
GSS05	m	[kg]	34	33	39				
GSS06	m	[kg]	53		58		64		
GSS07	m	[kg]	89		94		99	101	107

► Weights with oil filling for mounting position A; all values are approximate.
The weights relate to the basic version. Bear in mind that additional weights may be needed, e.g. for motor options.



Weights

GSS□□-3M SAR / SBR

			063C11 063C12 063C31 063C32	063C42	071C11	071C13 071C31	071C32	071C33	071C42	080C13	080C32 080C33	090C12	090C32	100C12
GSS05	m	[kg]	27			29				34				
GSS06	m	[kg]	42	43	44	45	44	45		50		55		
GSS07	m	[kg]		72	74	75	74	75	74	79		85	87	93

GSS□□-3M SAK

			063C11 063C12 063C31 063C32	063C42	071C11	071C13 071C31	071C32	071C33	071C42	080C13	080C32 080C33	090C12	090C32	100C12
GSS05	m	[kg]	31			33				38				
GSS06	m	[kg]	49	50	51	52	51	52		57		62		
GSS07	m	[kg]		83	85	86	85	86	85	90		96	98	104

► Weights with oil filling for mounting position A; all values are approximate.
The weights relate to the basic version. Bear in mind that additional weights may be needed, e.g. for motor options.



Selection tables

50 Hz, 60 Hz: P_N = 0.12 kW

n_N	1425 r/min				1735 r/min			i		
f_N	50 Hz				60 Hz					
	n_2 [r/min]	M_2 [Nm]	c		n_2 [r/min]	M_2 [Nm]	c			
	132	7.6	5.4		159	6.1	6.6	10.827	GSS04-2M □□□063C12	86
	103	9.7	5.0		125	7.9	6.1	13.810	GSS04-2M □□□063C12	86
	82	12	5.4		99	9.4	6.6	17.360	GSS04-2M □□□063C12	86
	64	15	5.0		78	12	6.1	22.143	GSS04-2M □□□063C12	86
	42	22	5.5		51	18	6.7	34.100	GSS04-2M □□□063C12	86
	36	23	5.4		44	19	6.6	39.200	GSS04-2M □□□063C12	86
	32	29	4.6		39	24	5.6	43.917	GSS04-2M □□□063C12	86
	29	29	5.0		35	24	6.1	50.000	GSS04-2M □□□063C12	86
	21	41	4.2		25	34	5.1	68.200	GSS04-2M □□□063C12	86
	19	45	3.9		22	37	4.7	77.000	GSS04-2M □□□063C12	86
	16	52	3.3		20	43	4.0	87.833	GSS04-2M □□□063C12	86
	14	57	3.1		17	47	3.7	99.167	GSS04-2M □□□063C12	86
	13	66	2.7		16	54	3.2	111.318	GSS04-2M □□□063C12	86
	11	72	2.5		14	60	2.9	125.682	GSS04-2M □□□063C12	86
	10	82	2.2		12	67	2.6	139.500	GSS04-2M □□□063C12	86
	9.1	89	2.0		11	74	2.4	157.500	GSS04-2M □□□063C12	86
	7.8	106	1.7		9.4	88	2.0	183.786	GSS04-2M □□□063C12	86
	7.4	122	2.9		8.9	101	3.5	193.233	GSS05-3M □□□063C12	102
	6.9	116	1.5		8.3	96	1.9	207.500	GSS04-2M □□□063C12	86
	6.4	131	2.7		7.8	108	3.2	222.133	GSS05-3M □□□063C12	102
	5.7	148	2.4		6.9	123	2.8	250.952	GSS05-3M □□□063C12	102
	5.0	163	2.2		6.1	136	2.6	283.333	GSS05-3M □□□063C12	102
	4.6	169	4.1		5.6	139	4.9	310.689	GSS06-3M □□□063C12	102
	4.1	187	3.7		4.9	155	4.4	350.778	GSS06-3M □□□063C12	102
	3.7	218	1.6		4.5	182	1.9	386.467	GSS05-3M □□□063C12	102
	3.3	239	1.5		4.0	200	1.8	436.333	GSS05-3M □□□063C12	102
	3.3	230	3.0		4.0	191	3.6	436.333	GSS06-3M □□□063C12	102
	2.9	272	1.3		3.5	228	1.6	497.722	GSS05-3M □□□063C12	102
	2.9	263	2.7		3.5	218	3.2	497.722	GSS06-3M □□□063C12	102
	2.5	298	1.2		3.1	250	1.4	561.944	GSS05-3M □□□063C12	102
	2.5	290	2.4		3.1	241	2.9	561.944	GSS06-3M □□□063C12	102
	2.3	335	1.1		2.7	281	1.3	630.803	GSS05-3M □□□063C12	102
	2.3	327	2.2		2.7	272	2.6	630.803	GSS06-3M □□□063C12	102
	2.0	367	1.0		2.4	308	1.2	712.197	GSS05-3M □□□063C12	102
	2.0	361	2.0		2.4	301	2.3	712.197	GSS06-3M □□□063C12	102
	1.8	407	0.9		2.2	343	1.0	790.500	GSS05-3M □□□063C12	102
	1.8	415	1.7		2.1	345	2.1	816.333	GSS06-3M □□□063C12	102
	1.6	445	0.8		1.9	375	1.0	892.500	GSS05-3M □□□063C12	102
	1.6	459	1.6		1.9	382	1.9	921.667	GSS06-3M □□□063C12	102
	1.4	512	1.4		1.7	426	1.7	1023.000	GSS06-3M □□□063C12	102



Selection tables

50 Hz, 60 Hz: P_N = 0.12 kW

n_N	1425 r/min				1735 r/min			i		
f_N	50 Hz				60 Hz					
	n_2 [r/min]	M_2 [Nm]	c		n_2 [r/min]	M_2 [Nm]	c			
					1.7	435	0.8	1041.452	GSS05-3M □□□063C12	102
	1.2	567	1.3		1.5	471	1.5	1155.000	GSS06-3M □□□063C12	102
	1.2	614	1.2		1.4	510	1.4	1241.550	GSS06-3M □□□063C12	102
	1.0	681	1.1		1.2	565	1.3	1401.750	GSS06-3M □□□063C12	102
	0.9	797	0.9		1.1	661	1.1	1635.693	GSS06-3M □□□063C12	102
	0.8	886	0.8		0.9	734	1.0	1846.750	GSS06-3M □□□063C12	102



Selection tables

50 Hz, 60 Hz: P_N = 0.18 kW

n_N	2740 r/min				3370 r/min			i		
f_N	50 Hz				60 Hz					
	n_2 [r/min]	M_2 [Nm]	c		n_2 [r/min]	M_2 [Nm]	c			
	62	23	5.9		77	18	7.2	43.917	GSS04-2M □□□063C11	86
	40	32	5.3		49	26	6.3	68.200	GSS04-2M □□□063C11	86
	36	36	4.8		44	29	5.7	77.000	GSS04-2M □□□063C11	86
	31	42	4.1		38	34	5.0	87.833	GSS04-2M □□□063C11	86
	28	46	3.8		34	38	4.6	99.167	GSS04-2M □□□063C11	86
	25	53	3.3		30	43	4.0	111.318	GSS04-2M □□□063C11	86
	22	58	3.0		27	48	3.7	125.682	GSS04-2M □□□063C11	86
	20	66	2.7		24	54	3.2	139.500	GSS04-2M □□□063C11	86
	17	73	2.4		21	59	3.0	157.500	GSS04-2M □□□063C11	86
	15	86	2.1		18	71	2.5	183.786	GSS04-2M □□□063C11	86
	14	100	3.1		17	82	3.6	193.233	GSS05-3M □□□063C11	102
	13	95	1.9		16	78	2.3	207.500	GSS04-2M □□□063C11	86
	12	106	3.3		15	87	4.0	222.133	GSS05-3M □□□063C11	102
	11	122	2.9		13	99	3.5	250.952	GSS05-3M □□□063C11	102
	9.7	135	2.6		12	110	3.2	283.333	GSS05-3M □□□063C11	102
	8.8	136	5.0		11	111	6.1	310.689	GSS06-3M □□□063C11	102
	7.8	152	4.5		9.6	123	5.5	350.778	GSS06-3M □□□063C11	102
	7.1	184	1.9		8.7	151	2.3	386.467	GSS05-3M □□□063C11	102
	6.3	203	1.8		7.7	167	2.1	436.333	GSS05-3M □□□063C11	102
	5.5	232	1.5		6.8	192	1.9	497.722	GSS05-3M □□□063C11	102
	5.5	218	3.2		6.8	177	3.9	497.722	GSS06-3M □□□063C11	102
	4.9	255	1.4		6.0	211	1.7	561.944	GSS05-3M □□□063C11	102
	4.9	242	2.9		6.0	198	3.5	561.944	GSS06-3M □□□063C11	102
	4.3	286	1.3		5.3	237	1.5	630.803	GSS05-3M □□□063C11	102
	4.3	273	2.6		5.3	224	3.1	630.803	GSS06-3M □□□063C11	102
	3.8	314	1.1		4.7	261	1.4	712.197	GSS05-3M □□□063C11	102
	3.8	302	2.3		4.7	248	2.8	712.197	GSS06-3M □□□063C11	102
	3.5	349	1.0		4.3	290	1.2	790.500	GSS05-3M □□□063C11	102
	3.4	347	2.0		4.1	285	2.5	816.333	GSS06-3M □□□063C11	102
	3.1	383	0.9		3.8	318	1.1	892.500	GSS05-3M □□□063C11	102
	3.0	383	1.9		3.7	316	2.2	921.667	GSS06-3M □□□063C11	102
	2.7	426	1.7		3.3	352	2.0	1023.000	GSS06-3M □□□063C11	102
	2.6	445	0.8		3.2	370	1.0	1041.452	GSS05-3M □□□063C11	102
	2.4	470	1.5		2.9	388	1.8	1155.000	GSS06-3M □□□063C11	102
	2.2	509	1.4		2.7	420	1.7	1241.550	GSS06-3M □□□063C11	102
	2.0	562	1.3		2.4	463	1.5	1401.750	GSS06-3M □□□063C11	102
	1.7	655	1.1		2.1	540	1.3	1635.693	GSS06-3M □□□063C11	102
	1.5	724	1.0		1.8	597	1.2	1846.750	GSS06-3M □□□063C11	102



Selection tables

50 Hz, 60 Hz: P_N = 0.18 kW

n_N	1365 r/min				1695 r/min			i		
f_N	50 Hz				60 Hz					
	n_2 [r/min]	M_2 [Nm]	c		n_2 [r/min]	M_2 [Nm]	c			
	126	12	3.4		154	9.6	4.3	10.827	GSS04-2M □□□063C32	86
	99	16	3.2		121	12	4.0	13.810	GSS04-2M □□□063C32	86
	79	19	3.4		96	15	4.3	17.360	GSS04-2M □□□063C32	86
	62	24	3.2		75	19	4.0	22.143	GSS04-2M □□□063C32	86
	40	36	3.5		49	29	4.3	34.100	GSS04-2M □□□063C32	86
	35	37	3.4		43	30	4.3	39.200	GSS04-2M □□□063C32	86
	31	46	2.9		38	37	3.6	43.917	GSS04-2M □□□063C32	86
	27	47	3.2		33	38	4.0	50.000	GSS04-2M □□□063C32	86
	20	65	2.7		24	53	3.3	68.200	GSS04-2M □□□063C32	86
	18	72	2.5		22	58	3.0	77.000	GSS04-2M □□□063C32	86
	16	83	2.1		19	67	2.6	87.833	GSS04-2M □□□063C32	86
	14	91	2.0		17	74	2.4	99.167	GSS04-2M □□□063C32	86
	12	104	1.7		15	85	2.1	111.318	GSS04-2M □□□063C32	86
	11	129	2.6		13	105	3.1	125.476	GSS05-3M □□□063C32	102
	11	114	1.6		13	93	1.9	125.682	GSS04-2M □□□063C32	86
	11	116	3.2		13	93	4.0	126.531	GSS06-3M □□□063C32	102
	9.8	129	1.4		12	105	1.7	139.500	GSS04-2M □□□063C32	86
	9.6	128	3.2		12	104	4.0	142.857	GSS06-3M □□□063C32	102
	8.8	140	3.2		11	113	4.0	155.000	GSS06-3M □□□063C32	102
	8.7	141	1.3		11	115	1.6	157.500	GSS04-2M □□□063C32	86
	7.8	155	3.2		9.5	125	4.0	175.000	GSS06-3M □□□063C32	102
	7.4	168	1.1		9.1	136	1.3	183.786	GSS04-2M □□□063C32	86
	7.1	193	1.8		8.6	157	2.3	193.233	GSS05-3M □□□063C32	102
	6.6	183	1.0		8.0	149	1.2	207.500	GSS04-2M □□□063C32	86
	6.1	208	1.7		7.5	168	2.1	222.133	GSS05-3M □□□063C32	102
	5.4	234	1.5		6.6	192	1.9	250.952	GSS05-3M □□□063C32	102
	5.1	233	3.0		6.2	189	3.7	269.500	GSS06-3M □□□063C32	102
	4.8	258	1.4		5.9	212	1.7	283.333	GSS05-3M □□□063C32	102
	4.4	270	2.6		5.4	219	3.2	310.689	GSS06-3M □□□063C32	102
	3.9	299	2.4		4.8	243	2.9	350.778	GSS06-3M □□□063C32	102
	3.5	344	1.0		4.3	283	1.3	386.467	GSS05-3M □□□063C32	102
	3.5	331	2.1		4.3	270	2.6	386.467	GSS06-3M □□□063C32	102
	3.1	377	1.0		3.8	310	1.2	436.333	GSS05-3M □□□063C32	102
	3.1	365	1.9		3.8	298	2.4	436.333	GSS06-3M □□□063C32	102
	2.7	429	0.8		3.4	353	1.0	497.722	GSS05-3M □□□063C32	102
	2.7	417	1.7		3.4	341	2.1	497.722	GSS06-3M □□□063C32	102
	2.4	460	1.6		3.0	376	1.9	561.944	GSS06-3M □□□063C32	102
					3.0	387	0.9	561.944	GSS05-3M □□□063C32	102
	2.2	518	1.4		2.6	424	1.7	630.803	GSS06-3M □□□063C32	102
					2.7	435	0.8	630.803	GSS05-3M □□□063C32	102



Selection tables

50 Hz, 60 Hz: P_N = 0.18 kW

n_N	1365 r/min				1695 r/min			i		
f_N	50 Hz				60 Hz					
	n_2 [r/min]	M_2 [Nm]	c		n_2 [r/min]	M_2 [Nm]	c			
	1.9	572	1.3		2.3	467	1.5	712.197	GSS06-3M □□□063C32	102
	1.7	656	1.1		2.0	536	1.3	816.333	GSS06-3M □□□063C32	102
	1.5	725	1.0		1.8	592	1.2	921.667	GSS06-3M □□□063C32	102
	1.3	808	0.9		1.6	660	1.1	1023.000	GSS06-3M □□□063C32	102
	1.2	895	0.8		1.5	729	1.0	1155.000	GSS06-3M □□□063C32	102
					1.4	789	0.9	1241.550	GSS06-3M □□□063C32	102
					1.2	874	0.8	1401.750	GSS06-3M □□□063C32	102



Selection tables

50 Hz, 60 Hz: P_N = 0.18 kW

n_N	930 r/min				1140 r/min			i		
f_N	50 Hz				60 Hz					
	n_2 [r/min]	M_2 [Nm]	c		n_2 [r/min]	M_2 [Nm]	c			
	165	9.0	5.4		202	7.3	6.6	5.639	GSS04-2M □□□071C13	86
	120	12	5.4		147	10.0	6.6	7.733	GSS04-2M □□□071C13	86
	103	14	5.4		126	11	6.6	9.042	GSS04-2M □□□071C13	86
	86	18	5.4		105	14	6.6	10.827	GSS05-2M □□□071C13	86
	75	19	5.4		92	15	6.6	12.400	GSS04-2M □□□071C13	86
	67	22	5.6		83	18	6.9	13.810	GSS04-2M □□□071C13	86
	54	27	5.4		66	22	6.6	17.360	GSS05-2M □□□071C13	86
	46	28	5.4		56	23	6.6	20.417	GSS04-2M □□□071C13	86
	42	33	5.1		51	27	6.2	22.143	GSS04-2M □□□071C13	86
	38	35	4.9		46	28	6.0	24.800	GSS04-2M □□□071C13	86
	34	41	4.2		42	33	5.1	27.125	GSS04-2M □□□071C13	86
	29	45	3.9		36	36	4.7	31.738	GSS04-2M □□□071C13	86
	27	52	3.4		33	42	4.1	34.100	GSS04-2M □□□071C13	86
	24	54	3.3		29	44	3.9	39.200	GSS04-2M □□□071C13	86
	21	66	2.7		26	54	3.2	43.917	GSS04-2M □□□071C13	86
	19	68	2.6		23	56	3.1	50.000	GSS04-2M □□□071C13	86
	17	75	2.3		21	62	2.8	54.250	GSS04-2M □□□071C13	86
	15	83	2.1		19	68	2.6	61.250	GSS04-2M □□□071C13	86
	14	94	1.9		17	77	2.3	68.200	GSS04-2M □□□071C13	86
	12	103	1.7		15	85	2.1	77.000	GSS04-2M □□□071C13	86
	12	114	3.1		14	93	3.7	79.722	GSS05-2M □□□071C13	86
	11	119	1.5		13	98	1.8	87.833	GSS04-2M □□□071C13	86
	11	127	2.8		13	104	3.4	87.833	GSS05-2M □□□071C13	86
	9.4	130	1.4		11	108	1.7	99.167	GSS04-2M □□□071C13	86
	9.4	140	2.5		11	115	3.0	99.167	GSS05-2M □□□071C13	86
	8.4	150	1.2		10	123	1.5	111.318	GSS04-2M □□□071C13	86
	8.2	163	2.2		10	134	2.6	113.667	GSS05-2M □□□071C13	86
	7.4	184	1.8		9.1	152	2.1	125.476	GSS05-3M □□□071C13	102
	7.4	163	1.1		9.1	135	1.3	125.682	GSS04-2M □□□071C13	86
	7.2	180	2.0		8.9	148	2.4	128.333	GSS05-2M □□□071C13	86
	6.7	195	1.8		8.3	161	2.2	137.950	GSS05-2M □□□071C13	86
	6.7	184	1.0		8.2	153	1.2	139.500	GSS04-2M □□□071C13	86
	6.1	223	1.5		7.4	184	1.9	153.708	GSS05-3M □□□071C13	102
	6.0	215	1.7		7.3	178	2.0	155.750	GSS05-2M □□□071C13	86
	5.9	200	0.9		7.2	167	1.1	157.500	GSS04-2M □□□071C13	86
	5.3	235	3.0		6.5	193	3.6	174.375	GSS06-2M □□□071C13	86
	5.3	222	3.1		6.5	182	3.8	175.000	GSS06-3M □□□071C13	102
	5.3	243	1.5		6.5	203	1.8	176.313	GSS05-2M □□□071C13	86
	4.8	275	1.3		5.9	228	1.6	193.233	GSS05-3M □□□071C13	102
	4.8	249	2.8		5.9	205	3.4	194.857	GSS06-3M □□□071C13	102



Selection tables

50 Hz, 60 Hz: P_N = 0.18 kW

n_N	930 r/min				1140 r/min			i		
f_N	50 Hz				60 Hz					
	n_2 [r/min]	M_2 [Nm]	c		n_2 [r/min]	M_2 [Nm]	c			
	4.7	261	2.7		5.8	214	3.3	196.875	GSS06-2M □□□071C13	86
	4.7	267	1.3		5.7	223	1.6	199.063	GSS05-2M □□□071C13	86
	4.2	276	2.6		5.2	228	3.1	220.000	GSS06-3M □□□071C13	102
	4.2	290	1.2		5.1	242	1.5	222.133	GSS05-3M □□□071C13	102
	3.9	301	2.3		4.8	249	2.8	238.700	GSS06-3M □□□071C13	102
	3.7	328	1.1		4.5	274	1.3	250.952	GSS05-3M □□□071C13	102
	3.5	332	2.1		4.2	275	2.6	269.500	GSS06-3M □□□071C13	102
	3.3	359	1.0		4.0	300	1.2	283.333	GSS05-3M □□□071C13	102
	3.0	391	0.9		3.7	327	1.1	307.417	GSS05-3M □□□071C13	102
	3.0	383	1.9		3.7	318	2.2	310.689	GSS06-3M □□□071C13	102
	2.9	412	3.0		3.5	339	3.6	321.673	GSS07-3M □□□071C13	102
	2.7	429	0.8		3.3	359	1.0	347.083	GSS05-3M □□□071C13	102
	2.7	423	1.7		3.2	351	2.0	350.778	GSS06-3M □□□071C13	102
	2.6	457	2.7		3.1	377	3.2	363.179	GSS07-3M □□□071C13	102
	2.4	468	1.5		2.9	389	1.8	386.467	GSS06-3M □□□071C13	102
	2.4	498	2.5		2.9	411	3.0	394.245	GSS07-3M □□□071C13	102
	2.1	517	1.4		2.6	429	1.7	436.333	GSS06-3M □□□071C13	102
	2.1	553	2.2		2.6	456	2.7	445.116	GSS07-3M □□□071C13	102
	1.9	610	2.0		2.3	504	2.4	490.403	GSS07-3M □□□071C13	102
	1.9	590	1.2		2.3	490	1.5	497.722	GSS06-3M □□□071C13	102
	1.7	676	1.8		2.1	559	2.2	553.681	GSS07-3M □□□071C13	102
	1.7	652	1.1		2.0	541	1.3	561.944	GSS06-3M □□□071C13	102
	1.5	734	1.0		1.8	608	1.2	630.803	GSS06-3M □□□071C13	102
	1.5	775	1.6		1.8	641	1.9	634.639	GSS07-3M □□□071C13	102
	1.3	813	0.9		1.6	672	1.1	712.197	GSS06-3M □□□071C13	102
	1.3	858	1.4		1.6	709	1.7	716.528	GSS07-3M □□□071C13	102
	1.1	1000	1.2		1.4	826	1.5	833.556	GSS07-3M □□□071C13	102
	1.0	1106	1.1		1.2	913	1.4	941.111	GSS07-3M □□□071C13	102
	0.9	1200	1.0		1.1	989	1.3	1011.633	GSS07-3M □□□071C13	102
	0.8	1327	0.9		1.0	1094	1.1	1142.167	GSS07-3M □□□071C13	102
	0.8	1442	0.9		0.9	1187	1.1	1227.755	GSS07-3M □□□071C13	102



Selection tables

50 Hz, 60 Hz: P_N = 0.25 kW

n_N	2710 r/min				3390 r/min			i		
f_N	50 Hz				60 Hz					
	n_2 [r/min]	M_2 [Nm]	c		n_2 [r/min]	M_2 [Nm]	c			
	250	8.3	4.9		313	6.5	6.2	10.827	GSS04-2M □□□063C31	86
	196	11	4.6		245	8.4	5.7	13.810	GSS04-2M □□□063C31	86
	156	13	4.9		195	10	6.2	17.360	GSS04-2M □□□063C31	86
	122	17	4.6		153	13	5.7	22.143	GSS04-2M □□□063C31	86
	79	25	5.0		99	20	6.3	34.100	GSS04-2M □□□063C31	86
	69	26	4.9		86	21	6.2	39.200	GSS04-2M □□□063C31	86
	62	32	4.2		77	26	5.2	43.917	GSS04-2M □□□063C31	86
	54	33	4.6		68	27	5.5	50.000	GSS04-2M □□□063C31	86
	40	46	3.7		50	37	4.6	68.200	GSS04-2M □□□063C31	86
	35	51	3.4		44	41	4.1	77.000	GSS04-2M □□□063C31	86
	31	60	2.9		39	48	3.6	87.833	GSS04-2M □□□063C31	86
	27	66	2.7		34	53	3.3	99.167	GSS04-2M □□□063C31	86
	24	76	2.3		30	61	2.9	111.318	GSS04-2M □□□063C31	86
	22	93	3.0		27	75	3.5	125.476	GSS05-3M □□□063C31	102
	22	83	2.1		27	67	2.6	125.682	GSS04-2M □□□063C31	86
	19	94	1.9		24	76	2.3	139.500	GSS04-2M □□□063C31	86
	17	103	1.7		22	83	2.1	157.500	GSS04-2M □□□063C31	86
	15	122	1.5		18	99	1.8	183.786	GSS04-2M □□□063C31	86
	14	142	2.2		18	114	2.6	193.233	GSS05-3M □□□063C31	102
	13	134	1.3		16	108	1.7	207.500	GSS04-2M □□□063C31	86
	12	151	2.3		15	121	2.9	222.133	GSS05-3M □□□063C31	102
	11	173	2.1		14	139	2.5	250.952	GSS05-3M □□□063C31	102
	9.6	191	1.9		12	154	2.3	283.333	GSS05-3M □□□063C31	102
	8.7	195	3.6		11	156	4.4	310.689	GSS06-3M □□□063C31	102
	7.7	218	3.2		9.7	174	4.0	350.778	GSS06-3M □□□063C31	102
	7.0	260	1.4		8.8	210	1.7	386.467	GSS05-3M □□□063C31	102
	7.0	242	2.9		8.8	194	3.6	386.467	GSS06-3M □□□063C31	102
	6.2	288	1.2		7.8	232	1.5	436.333	GSS05-3M □□□063C31	102
	6.2	270	2.6		7.8	216	3.2	436.333	GSS06-3M □□□063C31	102
	5.4	327	1.1		6.8	266	1.3	497.722	GSS05-3M □□□063C31	102
	5.4	310	2.3		6.8	248	2.8	497.722	GSS06-3M □□□063C31	102
	4.8	360	1.0		6.0	294	1.2	561.944	GSS05-3M □□□063C31	102
	4.8	344	2.1		6.0	277	2.5	561.944	GSS06-3M □□□063C31	102
	4.3	404	0.9		5.4	330	1.1	630.803	GSS05-3M □□□063C31	102
	4.3	387	1.8		5.4	312	2.3	630.803	GSS06-3M □□□063C31	102
	3.8	443	0.8		4.8	362	1.0	712.197	GSS05-3M □□□063C31	102
	3.8	428	1.7		4.8	347	2.0	712.197	GSS06-3M □□□063C31	102
	3.3	491	1.5		4.2	398	1.8	816.333	GSS06-3M □□□063C31	102
	2.9	542	1.3		3.7	440	1.6	921.667	GSS06-3M □□□063C31	102
	2.6	603	1.2		3.3	490	1.5	1023.000	GSS06-3M □□□063C31	102



Selection tables

50 Hz, 60 Hz: P_N = 0.25 kW

n_N	2710 r/min				3390 r/min			i		
f_N	50 Hz				60 Hz					
	n_2 [r/min]	M_2 [Nm]	c		n_2 [r/min]	M_2 [Nm]	c			
	2.3	665	1.1		2.9	540	1.3	1155.000	GSS06-3M □□□063C31	102
	2.2	719	1.0		2.7	584	1.2	1241.550	GSS06-3M □□□063C31	102
	1.9	793	0.9		2.4	644	1.1	1401.750	GSS06-3M □□□063C31	102



Selection tables

50 Hz, 60 Hz: P_N = 0.25 kW

n_N	1370 r/min				1680 r/min			i		
f_N	50 Hz				60 Hz					
	n_2 [r/min]	M_2 [Nm]	c		n_2 [r/min]	M_2 [Nm]	c			
	243	8.5	4.5		296	6.9	5.6	5.639	GSS04-2M □□□063C42	86
	177	12	4.5		216	9.5	5.6	7.733	GSS04-2M □□□063C42	86
	152	13	4.5		185	11	5.6	9.042	GSS04-2M □□□063C42	86
	138	15	5.2		169	12	6.4	9.897	GSS04-2M □□□063C42	86
	127	17	4.5		154	13	5.6	10.827	GSS05-2M □□□063C42	86
	111	18	4.5		135	15	5.6	12.400	GSS04-2M □□□063C42	86
	99	21	4.8		121	17	5.9	13.810	GSS04-2M □□□063C42	86
	86	23	5.2		105	19	6.4	15.869	GSS04-2M □□□063C42	86
	79	26	4.5		96	21	5.6	17.360	GSS05-2M □□□063C42	86
	67	27	4.5		82	22	5.6	20.417	GSS04-2M □□□063C42	86
	62	32	4.8		75	26	5.9	22.143	GSS04-2M □□□063C42	86
	55	34	4.5		67	27	5.6	24.800	GSS04-2M □□□063C42	86
	51	39	4.3		62	32	5.3	27.125	GSS04-2M □□□063C42	86
	43	43	4.1		53	35	4.8	31.738	GSS04-2M □□□063C42	86
	40	50	3.5		49	40	4.3	34.100	GSS04-2M □□□063C42	86
	35	52	3.4		43	42	4.1	39.200	GSS04-2M □□□063C42	86
	31	64	2.8		38	52	3.4	43.917	GSS04-2M □□□063C42	86
	27	66	2.7		33	54	3.3	50.000	GSS04-2M □□□063C42	86
	25	73	2.4		31	60	2.9	54.250	GSS04-2M □□□063C42	86
	22	80	2.2		27	66	2.7	61.250	GSS04-2M □□□063C42	86
	20	91	2.0		25	75	2.4	68.200	GSS04-2M □□□063C42	86
	18	100	1.8		22	82	2.2	77.000	GSS04-2M □□□063C42	86
	17	110	3.2		21	89	3.9	79.722	GSS05-2M □□□063C42	86
	16	116	1.5		19	95	1.9	87.833	GSS04-2M □□□063C42	86
	16	122	2.9		19	99	3.5	87.833	GSS05-2M □□□063C42	86
	14	127	1.4		17	105	1.7	99.167	GSS04-2M □□□063C42	86
	14	136	2.6		17	111	3.2	99.167	GSS05-2M □□□063C42	86
	12	145	1.2		15	119	1.5	111.318	GSS04-2M □□□063C42	86
	12	158	2.2		15	129	2.7	113.667	GSS05-2M □□□063C42	86
	11	180	1.9		13	148	2.2	125.476	GSS05-3M □□□063C42	102
	11	159	1.1		13	131	1.4	125.682	GSS04-2M □□□063C42	86
	11	174	2.0		13	143	2.5	128.333	GSS05-2M □□□063C42	86
	9.9	190	1.9		12	156	2.3	137.950	GSS05-2M □□□063C42	86
	9.9	182	3.2		12	149	3.9	137.950	GSS06-2M □□□063C42	86
	9.8	180	1.0		12	148	1.2	139.500	GSS04-2M □□□063C42	86
	8.9	218	1.6		11	180	1.9	153.708	GSS05-3M □□□063C42	102
	8.8	210	1.7		11	172	2.1	155.750	GSS05-2M □□□063C42	86
	8.8	202	3.2		11	165	3.9	155.750	GSS06-2M □□□063C42	86
	8.7	196	0.9		11	162	1.1	157.500	GSS04-2M □□□063C42	86
	7.9	228	2.6		9.6	187	3.2	174.375	GSS06-2M □□□063C42	86



Selection tables

50 Hz, 60 Hz: P_N = 0.25 kW

n_N	1370 r/min				1680 r/min			i		
f_N	50 Hz				60 Hz					
	n_2 [r/min]	M_2 [Nm]	c		n_2 [r/min]	M_2 [Nm]	c			
	7.8	215	3.2		9.5	175	3.9	175.000	GSS06-3M □□□063C42	102
	7.8	240	1.4		9.5	198	1.7	176.313	GSS05-2M □□□063C42	86
	7.1	269	1.3		8.6	222	1.6	193.233	GSS05-3M □□□063C42	102
	7.0	241	2.9		8.6	197	3.5	194.857	GSS06-3M □□□063C42	102
	7.0	254	2.6		8.5	208	3.2	196.875	GSS06-2M □□□063C42	86
	6.9	265	1.4		8.4	218	1.6	199.063	GSS05-2M □□□063C42	86
	6.2	269	2.6		7.6	220	3.2	220.000	GSS06-3M □□□063C42	102
	6.2	289	1.2		7.5	238	1.5	222.133	GSS05-3M □□□063C42	102
	5.7	294	2.4		7.0	241	2.9	238.700	GSS06-3M □□□063C42	102
	5.5	326	1.1		6.7	271	1.3	250.952	GSS05-3M □□□063C42	102
	5.1	327	2.2		6.2	269	2.6	269.500	GSS06-3M □□□063C42	102
	4.8	358	1.0		5.9	298	1.2	283.333	GSS05-3M □□□063C42	102
	4.5	390	0.9		5.4	325	1.1	307.417	GSS05-3M □□□063C42	102
	4.4	377	1.9		5.4	311	2.3	310.689	GSS06-3M □□□063C42	102
	4.3	402	3.0		5.2	329	3.7	321.673	GSS07-3M □□□063C42	102
	4.0	429	0.8		4.8	357	1.0	347.083	GSS05-3M □□□063C42	102
	3.9	417	1.7		4.8	345	2.1	350.778	GSS06-3M □□□063C42	102
	3.8	447	2.7		4.6	366	3.3	363.179	GSS07-3M □□□063C42	102
	3.5	462	1.5		4.3	382	1.9	386.467	GSS06-3M □□□063C42	102
					4.3	398	0.9	386.467	GSS05-3M □□□063C42	102
	3.5	488	2.5		4.2	401	3.0	394.245	GSS07-3M □□□063C42	102
	3.1	510	1.4		3.8	422	1.7	436.333	GSS06-3M □□□063C42	102
					3.9	437	0.8	436.333	GSS05-3M □□□063C42	102
	3.1	542	2.3		3.8	446	2.7	445.116	GSS07-3M □□□063C42	102
	2.8	599	2.1		3.4	494	2.5	490.403	GSS07-3M □□□063C42	102
	2.8	581	1.2		3.4	482	1.5	497.722	GSS06-3M □□□063C42	102
	2.5	664	1.9		3.0	548	2.2	553.681	GSS07-3M □□□063C42	102
	2.4	641	1.1		3.0	532	1.3	561.944	GSS06-3M □□□063C42	102
	2.2	721	1.0		2.7	598	1.2	630.803	GSS06-3M □□□063C42	102
	2.2	760	1.6		2.6	628	2.0	634.639	GSS07-3M □□□063C42	102
	1.9	796	0.9		2.3	659	1.1	712.197	GSS06-3M □□□063C42	102
	1.9	842	1.5		2.3	696	1.8	716.528	GSS07-3M □□□063C42	102
					2.1	756	1.0	816.333	GSS06-3M □□□063C42	102
	1.6	977	1.3		2.0	808	1.5	833.556	GSS07-3M □□□063C42	102
					1.8	834	0.9	921.667	GSS06-3M □□□063C42	102
	1.5	1081	1.2		1.8	895	1.4	941.111	GSS07-3M □□□063C42	102
	1.4	1168	1.1		1.7	966	1.3	1011.633	GSS07-3M □□□063C42	102
	1.2	1292	1.0		1.5	1069	1.2	1142.167	GSS07-3M □□□063C42	102
	1.1	1399	0.9		1.4	1155	1.1	1227.755	GSS07-3M □□□063C42	102
	1.0	1546	0.8		1.2	1277	1.0	1386.175	GSS07-3M □□□063C42	102



Selection tables

50 Hz, 60 Hz: P_N = 0.25 kW

n_N	1370 r/min				1680 r/min			i		
f_N	50 Hz				60 Hz					
	n_2 [r/min]	M_2 [Nm]	c		n_2 [r/min]	M_2 [Nm]	c			
					1.1	1451	0.9	1569.181	GSS07-3M □□□063C42	102



Selection tables

50 Hz, 60 Hz: P_N = 0.25 kW

n_N	930 r/min				1140 r/min			i		
f_N	50 Hz				60 Hz					
	n_2 [r/min]	M_2 [Nm]	c		n_2 [r/min]	M_2 [Nm]	c			
	165	13	3.9		202	10	4.7	5.639	GSS04-2M □□□071C33	86
	120	18	3.9		147	14	4.7	7.733	GSS04-2M □□□071C33	86
	103	20	3.9		126	16	4.7	9.042	GSS04-2M □□□071C33	86
	94	22	4.4		115	18	5.4	9.897	GSS04-2M □□□071C33	86
	86	25	4.4		105	20	5.4	10.827	GSS04-2M □□□071C33	86
	75	27	3.9		92	22	4.7	12.400	GSS04-2M □□□071C33	86
	67	31	4.1		83	25	5.0	13.810	GSS04-2M □□□071C33	86
	59	34	4.4		72	27	5.4	15.869	GSS04-2M □□□071C33	86
	54	37	4.4		66	30	5.4	17.360	GSS04-2M □□□071C33	86
	46	40	3.9		56	32	4.7	20.417	GSS04-2M □□□071C33	86
	42	47	3.7		51	38	4.5	22.143	GSS04-2M □□□071C33	86
	38	49	3.5		46	40	4.3	24.800	GSS04-2M □□□071C33	86
	34	58	3.0		42	47	3.7	27.125	GSS04-2M □□□071C33	86
	29	63	2.8		36	51	3.4	31.738	GSS04-2M □□□071C33	86
	27	72	2.4		33	59	3.0	34.100	GSS04-2M □□□071C33	86
	24	75	2.3		29	62	2.8	39.200	GSS04-2M □□□071C33	86
	21	93	1.9		26	76	2.3	43.917	GSS04-2M □□□071C33	86
	21	96	3.1		26	79	3.8	43.917	GSS05-2M □□□071C33	86
	19	95	1.9		23	78	2.3	50.000	GSS04-2M □□□071C33	86
	17	106	1.7		21	87	2.0	54.250	GSS04-2M □□□071C33	86
	15	116	1.5		19	95	1.9	61.250	GSS04-2M □□□071C33	86
	14	131	1.4		17	108	1.6	68.200	GSS04-2M □□□071C33	86
	13	144	2.4		16	118	3.0	70.611	GSS05-2M □□□071C33	86
	12	144	1.2		15	119	1.5	77.000	GSS04-2M □□□071C33	86
	12	160	2.2		14	131	2.7	79.722	GSS05-2M □□□071C33	86
	11	167	1.1		13	138	1.3	87.833	GSS04-2M □□□071C33	86
	11	178	2.0		13	146	2.4	87.833	GSS05-2M □□□071C33	86
	9.4	182	1.0		11	151	1.2	99.167	GSS04-2M □□□071C33	86
	9.4	197	1.8		11	162	2.2	99.167	GSS05-2M □□□071C33	86
	8.4	209	0.9		10	172	1.0	111.318	GSS04-2M □□□071C33	86
	8.2	227	1.6		10	188	1.9	113.667	GSS05-2M □□□071C33	86
	8.2	218	3.1		10	179	3.8	113.667	GSS06-2M □□□071C33	86
	7.4	258	1.3		9.1	213	1.5	125.476	GSS05-3M □□□071C33	102
	7.3	230	3.0		9.0	188	3.7	126.531	GSS06-3M □□□071C33	102
	7.2	251	1.4		8.9	207	1.7	128.333	GSS05-2M □□□071C33	86
	7.2	243	2.9		8.9	199	3.5	128.333	GSS06-2M □□□071C33	86
	6.7	273	1.3		8.3	225	1.6	137.950	GSS05-2M □□□071C33	86
	6.7	263	2.7		8.3	215	3.2	137.950	GSS06-2M □□□071C33	86
	6.5	257	2.7		8.0	211	3.3	142.857	GSS06-3M □□□071C33	102
	6.1	311	1.1		7.4	257	1.3	153.708	GSS05-3M □□□071C33	102



Selection tables

50 Hz, 60 Hz: P_N = 0.25 kW

n_N	930 r/min				1140 r/min			i		
f_N	50 Hz				60 Hz					
	n_2 [r/min]	M_2 [Nm]	c		n_2 [r/min]	M_2 [Nm]	c			
	6.0	281	2.5		7.4	230	3.0	155.000	GSS06-3M □□□071C33	102
	6.0	300	1.2		7.3	249	1.4	155.750	GSS05-2M □□□071C33	86
	6.0	293	2.4		7.3	240	2.9	155.750	GSS06-2M □□□071C33	86
	5.3	330	2.2		6.5	271	2.6	174.375	GSS06-2M □□□071C33	86
	5.3	312	2.3		6.5	257	2.7	175.000	GSS06-3M □□□071C33	102
	5.3	340	1.1		6.5	284	1.3	176.313	GSS05-2M □□□071C33	86
	4.8	384	0.9		5.9	318	1.1	193.233	GSS05-3M □□□071C33	102
	4.8	349	2.0		5.9	288	2.5	194.857	GSS06-3M □□□071C33	102
	4.7	366	1.9		5.8	302	2.3	196.875	GSS06-2M □□□071C33	86
	4.7	373	1.0		5.7	312	1.2	199.063	GSS05-2M □□□071C33	86
	4.2	387	1.8		5.2	320	2.2	220.000	GSS06-3M □□□071C33	102
	4.2	405	0.9		5.1	338	1.1	222.133	GSS05-3M □□□071C33	102
	4.1	413	2.9		5.0	338	3.6	227.778	GSS07-3M □□□071C33	102
	3.9	422	1.7		4.8	349	2.0	238.700	GSS06-3M □□□071C33	102
	3.8	452	2.7		4.6	371	3.3	247.139	GSS07-3M □□□071C33	102
	3.5	466	1.5		4.2	386	1.8	269.500	GSS06-3M □□□071C33	102
	3.3	502	2.4		4.1	413	2.9	279.028	GSS07-3M □□□071C33	102
	3.0	537	1.3		3.7	446	1.6	310.689	GSS06-3M □□□071C33	102
	2.9	579	2.1		3.5	477	2.6	321.673	GSS07-3M □□□071C33	102
	2.7	592	1.2		3.2	492	1.5	350.778	GSS06-3M □□□071C33	102
	2.6	642	1.9		3.1	530	2.3	363.179	GSS07-3M □□□071C33	102
	2.4	654	1.1		2.9	544	1.3	386.467	GSS06-3M □□□071C33	102
	2.4	699	1.8		2.9	578	2.1	394.245	GSS07-3M □□□071C33	102
	2.1	722	1.0		2.6	600	1.2	436.333	GSS06-3M □□□071C33	102
	2.1	774	1.6		2.6	641	1.9	445.116	GSS07-3M □□□071C33	102
	1.9	854	1.5		2.3	707	1.7	490.403	GSS07-3M □□□071C33	102
	1.9	824	0.9		2.3	684	1.1	497.722	GSS06-3M □□□071C33	102
	1.7	946	1.3		2.1	783	1.6	553.681	GSS07-3M □□□071C33	102
	1.5	1084	1.2		1.8	897	1.4	634.639	GSS07-3M □□□071C33	102
	1.3	1199	1.0		1.6	992	1.3	716.528	GSS07-3M □□□071C33	102
	1.1	1396	0.9		1.4	1154	1.1	833.556	GSS07-3M □□□071C33	102
	1.0	1544	0.8		1.2	1276	1.0	941.111	GSS07-3M □□□071C33	102



Selection tables

50 Hz, 60 Hz: P_N = 0.37 kW

n_N	2720 r/min				3360 r/min			i		
f_N	50 Hz				60 Hz					
	n_2 [r/min]	M_2 [Nm]	c		n_2 [r/min]	M_2 [Nm]	c			
	133	20	5.6		165	16	6.4	20.417	GSS04-2M □□□071C11	86
	110	25	5.1		135	20	5.8	24.800	GSS04-2M □□□071C11	86
	100	29	5.6		124	24	6.5	27.125	GSS04-2M □□□071C11	86
	86	32	4.3		106	26	5.0	31.738	GSS04-2M □□□071C11	86
	80	37	4.6		99	30	5.6	34.100	GSS04-2M □□□071C11	86
	69	39	3.7		86	32	4.3	39.200	GSS04-2M □□□071C11	86
	62	48	3.6		77	39	4.5	43.917	GSS04-2M □□□071C11	86
	54	50	3.2		67	41	3.7	50.000	GSS04-2M □□□071C11	86
	50	56	3.1		62	45	3.5	54.250	GSS04-2M □□□071C11	86
	44	61	2.8		55	50	3.2	61.250	GSS04-2M □□□071C11	86
	40	70	2.5		49	56	3.1	68.200	GSS04-2M □□□071C11	86
	35	77	2.3		44	62	2.8	77.000	GSS04-2M □□□071C11	86
	31	89	2.0		38	72	2.4	87.833	GSS04-2M □□□071C11	86
	27	98	1.8		34	80	2.2	99.167	GSS04-2M □□□071C11	86
	24	113	1.6		30	92	1.9	111.318	GSS04-2M □□□071C11	86
	24	119	3.0		30	96	3.6	113.667	GSS05-2M □□□071C11	86
	22	139	2.0		27	113	2.4	125.476	GSS05-3M □□□071C11	102
	22	124	1.4		27	101	1.8	125.682	GSS04-2M □□□071C11	86
	21	132	2.7		26	106	3.3	128.333	GSS05-2M □□□071C11	86
	20	145	2.4		24	117	3.0	137.950	GSS05-2M □□□071C11	86
	19	140	1.3		24	114	1.6	139.500	GSS04-2M □□□071C11	86
	18	169	1.8		22	138	2.1	153.708	GSS05-3M □□□071C11	102
	17	162	2.2		22	130	2.7	155.750	GSS05-2M □□□071C11	86
	17	153	1.2		21	125	1.4	157.500	GSS04-2M □□□071C11	86
	15	185	1.9		19	150	2.4	176.313	GSS05-2M □□□071C11	86
	14	211	1.5		17	172	1.8	193.233	GSS05-3M □□□071C11	102
	14	206	1.7		17	167	2.1	199.063	GSS05-2M □□□071C11	86
	12	225	1.6		15	183	1.9	222.133	GSS05-3M □□□071C11	102
	11	227	3.1		14	184	3.8	238.700	GSS06-3M □□□071C11	102
	11	257	1.4		13	209	1.7	250.952	GSS05-3M □□□071C11	102
	10	252	2.8		12	205	3.4	269.500	GSS06-3M □□□071C11	102
	9.6	283	1.3		12	232	1.5	283.333	GSS05-3M □□□071C11	102
	8.8	311	1.2		11	254	1.4	307.417	GSS05-3M □□□071C11	102
	8.8	292	2.4		11	238	2.9	310.689	GSS06-3M □□□071C11	102
	7.8	343	1.0		9.7	281	1.3	347.083	GSS05-3M □□□071C11	102
	7.8	326	2.2		9.6	264	2.7	350.778	GSS06-3M □□□071C11	102
	7.0	386	0.9		8.7	316	1.1	386.467	GSS05-3M □□□071C11	102
	7.0	361	2.0		8.7	294	2.4	386.467	GSS06-3M □□□071C11	102
	6.9	376	3.2		8.5	307	3.9	394.245	GSS07-3M □□□071C11	102
	6.2	426	0.8		7.7	348	1.0	436.333	GSS05-3M □□□071C11	102



Selection tables

50 Hz, 60 Hz: P_N = 0.37 kW

n_N	2720 r/min				3360 r/min			i		
f_N	50 Hz				60 Hz					
	n_2 [r/min]	M_2 [Nm]	c		n_2 [r/min]	M_2 [Nm]	c			
	6.2	403	1.8		7.7	328	2.2	436.333	GSS06-3M □□□071C11	102
	6.1	420	2.9		7.5	341	3.5	445.116	GSS07-3M □□□071C11	102
	5.5	466	2.6		6.9	378	3.2	490.403	GSS07-3M □□□071C11	102
	5.5	461	1.5		6.8	376	1.9	497.722	GSS06-3M □□□071C11	102
	4.9	519	2.4		6.1	422	2.9	553.681	GSS07-3M □□□071C11	102
	4.8	512	1.4		6.0	418	1.7	561.944	GSS06-3M □□□071C11	102
	4.3	576	1.2		5.3	471	1.5	630.803	GSS06-3M □□□071C11	102
	4.3	599	2.1		5.3	487	2.5	634.639	GSS07-3M □□□071C11	102
	3.8	636	1.1		4.7	522	1.4	712.197	GSS06-3M □□□071C11	102
	3.8	666	1.9		4.7	543	2.3	716.528	GSS07-3M □□□071C11	102
	3.3	729	1.0		4.1	599	1.2	816.333	GSS06-3M □□□071C11	102
	3.3	775	1.6		4.0	634	1.9	833.556	GSS07-3M □□□071C11	102
	3.0	804	0.9		3.6	662	1.1	921.667	GSS06-3M □□□071C11	102
	2.9	860	1.4		3.6	704	1.8	941.111	GSS07-3M □□□071C11	102
	2.7	927	1.3		3.3	761	1.6	1011.633	GSS07-3M □□□071C11	102
	2.7	894	0.8		3.3	736	1.0	1023.000	GSS06-3M □□□071C11	102
	2.4	1027	1.2		2.9	843	1.5	1142.167	GSS07-3M □□□071C11	102
	2.2	1108	1.1		2.7	910	1.4	1227.755	GSS07-3M □□□071C11	102
	2.0	1226	1.0		2.4	1008	1.2	1386.175	GSS07-3M □□□071C11	102
	1.7	1386	0.9		2.1	1139	1.1	1569.181	GSS07-3M □□□071C11	102
	1.5	1534	0.8		1.9	1261	1.0	1771.656	GSS07-3M □□□071C11	102



Selection tables

50 Hz, 60 Hz: P_N = 0.37 kW

n_N	1410 r/min				1720 r/min			i		
f_N	50 Hz				60 Hz					
	n_2 [r/min]	M_2 [Nm]	c		n_2 [r/min]	M_2 [Nm]	c			
	250	12	4.0		303	10	4.8	5.639	GSS04-2M □□□071C32	86
	182	17	4.0		221	14	4.8	7.733	GSS04-2M □□□071C32	86
	156	19	4.0		189	16	4.8	9.042	GSS04-2M □□□071C32	86
	143	22	4.5		173	18	5.5	9.897	GSS04-2M □□□071C32	86
	130	24	4.0		158	20	4.8	10.827	GSS05-2M □□□071C32	86
					159	19	5.5	10.827	GSS04-2M □□□071C32	86
	114	26	4.0		138	22	4.8	12.400	GSS04-2M □□□071C32	86
	102	31	4.2		124	25	5.1	13.810	GSS04-2M □□□071C32	86
	89	33	4.5		108	27	5.5	15.869	GSS04-2M □□□071C32	86
	81	37	4.0		99	30	4.8	17.360	GSS05-2M □□□071C32	86
					99	30	5.5	17.360	GSS04-2M □□□071C32	86
	69	39	3.8		84	32	4.3	20.417	GSS04-2M □□□071C32	86
	64	47	3.7		77	38	4.5	22.143	GSS04-2M □□□071C32	86
	57	49	3.4		69	40	3.9	24.800	GSS04-2M □□□071C32	86
	52	57	3.1		63	47	3.7	27.125	GSS04-2M □□□071C32	86
	44	62	2.8		54	51	3.3	31.738	GSS04-2M □□□071C32	86
	41	72	2.5		50	59	3.0	34.100	GSS04-2M □□□071C32	86
	36	75	2.3		44	62	2.8	39.200	GSS04-2M □□□071C32	86
	32	92	1.9		39	76	2.3	43.917	GSS04-2M □□□071C32	86
	32	95	3.2		39	77	3.9	43.917	GSS05-2M □□□071C32	86
	28	96	1.9		34	79	2.2	50.000	GSS04-2M □□□071C32	86
	26	106	1.7		32	87	2.0	54.250	GSS04-2M □□□071C32	86
	23	116	1.5		28	96	1.9	61.250	GSS04-2M □□□071C32	86
	21	132	1.4		25	109	1.6	68.200	GSS04-2M □□□071C32	86
	20	143	2.5		24	117	3.0	70.611	GSS05-2M □□□071C32	86
	18	145	1.2		22	119	1.5	77.000	GSS04-2M □□□071C32	86
	18	159	2.2		21	130	2.7	79.722	GSS05-2M □□□071C32	86
	16	168	1.1		20	139	1.3	87.833	GSS04-2M □□□071C32	86
	16	178	2.0		20	146	2.4	87.833	GSS05-2M □□□071C32	86
	14	184	1.0		17	152	1.2	99.167	GSS04-2M □□□071C32	86
	14	198	1.8		17	163	2.2	99.167	GSS05-2M □□□071C32	86
	13	210	0.9		15	174	1.0	111.318	GSS04-2M □□□071C32	86
	12	229	1.6		15	188	1.9	113.667	GSS05-2M □□□071C32	86
	12	218	3.2		15	179	3.9	113.667	GSS06-2M □□□071C32	86
	11	261	1.3		14	216	1.5	125.476	GSS05-3M □□□071C32	102
	11	231	3.0		14	190	3.7	126.531	GSS06-3M □□□071C32	102
	11	253	1.4		13	209	1.7	128.333	GSS05-2M □□□071C32	86
	11	243	2.9		13	200	3.5	128.333	GSS06-2M □□□071C32	86
	10	275	1.3		12	227	1.6	137.950	GSS05-2M □□□071C32	86
	10	264	2.7		12	217	3.2	137.950	GSS06-2M □□□071C32	86



Selection tables

50 Hz, 60 Hz: P_N = 0.37 kW

n_N	1410 r/min				1720 r/min			i		
f_N	50 Hz				60 Hz					
	n_2 [r/min]	M_2 [Nm]	c		n_2 [r/min]	M_2 [Nm]	c			
	9.9	257	2.7		12	212	3.3	142.857	GSS06-3M □□□071C32	102
	9.2	315	1.1		11	261	1.3	153.708	GSS05-3M □□□071C32	102
	9.1	281	2.5		11	232	3.0	155.000	GSS06-3M □□□071C32	102
	9.1	303	1.2		11	251	1.4	155.750	GSS05-2M □□□071C32	86
	9.1	294	2.4		11	242	2.9	155.750	GSS06-2M □□□071C32	86
	8.1	330	2.1		9.8	272	2.6	174.375	GSS06-2M □□□071C32	86
	8.1	313	2.3		9.8	257	2.7	175.000	GSS06-3M □□□071C32	102
	8.0	347	1.0		9.7	287	1.2	176.313	GSS05-2M □□□071C32	86
	7.3	389	0.9		8.9	323	1.1	193.233	GSS05-3M □□□071C32	102
	7.2	351	2.0		8.8	289	2.4	194.857	GSS06-3M □□□071C32	102
	7.2	368	1.9		8.7	304	2.3	196.875	GSS06-2M □□□071C32	86
	7.1	382	0.9		8.6	317	1.1	199.063	GSS05-2M □□□071C32	86
	6.4	391	1.8		7.8	322	2.2	220.000	GSS06-3M □□□071C32	102
	6.4	418	0.9		7.7	346	1.0	222.133	GSS05-3M □□□071C32	102
	6.2	414	2.9		7.5	341	3.5	227.778	GSS07-3M □□□071C32	102
	5.9	427	1.7		7.2	352	2.0	238.700	GSS06-3M □□□071C32	102
	5.7	453	2.7		6.9	372	3.3	247.139	GSS07-3M □□□071C32	102
	5.2	474	1.5		6.4	393	1.8	269.500	GSS06-3M □□□071C32	102
	5.1	504	2.4		6.1	415	2.9	279.028	GSS07-3M □□□071C32	102
	4.5	547	1.3		5.5	454	1.6	310.689	GSS06-3M □□□071C32	102
	4.4	585	2.1		5.3	482	2.5	321.673	GSS07-3M □□□071C32	102
	4.0	605	1.2		4.9	503	1.4	350.778	GSS06-3M □□□071C32	102
	3.9	650	1.9		4.7	537	2.3	363.179	GSS07-3M □□□071C32	102
	3.7	668	1.1		4.4	556	1.3	386.467	GSS06-3M □□□071C32	102
	3.6	709	1.7		4.3	587	2.1	394.245	GSS07-3M □□□071C32	102
	3.2	737	1.0		3.9	615	1.2	436.333	GSS06-3M □□□071C32	102
	3.2	787	1.6		3.8	652	1.9	445.116	GSS07-3M □□□071C32	102
	2.9	869	1.4		3.5	721	1.7	490.403	GSS07-3M □□□071C32	102
	2.8	841	0.9		3.4	701	1.0	497.722	GSS06-3M □□□071C32	102
	2.6	963	1.3		3.1	800	1.6	553.681	GSS07-3M □□□071C32	102
	2.2	1101	1.1		2.7	916	1.4	634.639	GSS07-3M □□□071C32	102
	2.0	1218	1.0		2.4	1015	1.2	716.528	GSS07-3M □□□071C32	102
	1.7	1413	0.9		2.1	1176	1.1	833.556	GSS07-3M □□□071C32	102
	1.5	1563	0.8		1.8	1301	1.0	941.111	GSS07-3M □□□071C32	102



Selection tables

50 Hz, 60 Hz: P_N = 0.37 kW

n_N	950 r/min				1160 r/min			i		
f_N	50 Hz				60 Hz					
	n_2 [r/min]	M_2 [Nm]	c		n_2 [r/min]	M_2 [Nm]	c			
	168	18	5.7		206	15	6.9	5.639	GSS04-2M □□□080C13	86
	123	25	5.7		150	20	6.9	7.733	GSS04-2M □□□080C13	86
	105	28	5.7		128	23	6.8	9.042	GSS04-2M □□□080C13	86
	96	32	4.8		117	26	5.8	9.897	GSS04-2M □□□080C13	86
	88	36	4.4		107	29	5.4	10.827	GSS04-2M □□□080C13	86
	77	39	4.5		94	31	5.4	12.400	GSS04-2M □□□080C13	86
	69	46	3.5		84	37	4.2	13.810	GSS04-2M □□□080C13	86
	60	50	3.5		73	41	4.3	15.869	GSS04-2M □□□080C13	86
	55	54	3.2		67	44	3.9	17.360	GSS04-2M □□□080C13	86
	47	58	3.0		57	48	3.4	20.417	GSS04-2M □□□080C13	86
	43	69	2.5		52	57	3.1	22.143	GSS04-2M □□□080C13	86
	38	72	2.4		47	59	3.0	24.800	GSS04-2M □□□080C13	86
	35	85	2.1		43	70	2.5	27.125	GSS04-2M □□□080C13	86
	30	92	1.9		37	76	2.3	31.738	GSS04-2M □□□080C13	86
	28	106	1.7		34	87	2.0	34.100	GSS04-2M □□□080C13	86
	27	113	3.1		33	92	3.8	35.306	GSS05-2M □□□080C13	86
	24	110	1.6		30	91	2.0	39.200	GSS04-2M □□□080C13	86
	24	115	3.0		30	94	3.6	39.200	GSS05-2M □□□080C13	86
	22	135	1.3		26	112	1.6	43.917	GSS04-2M □□□080C13	86
	22	140	2.5		26	115	3.1	43.917	GSS05-2M □□□080C13	86
	19	139	1.3		23	115	1.6	50.000	GSS04-2M □□□080C13	86
	19	148	2.4		23	121	2.9	50.000	GSS05-2M □□□080C13	86
	18	154	1.2		21	128	1.4	54.250	GSS04-2M □□□080C13	86
	18	163	2.2		21	133	2.6	54.250	GSS05-2M □□□080C13	86
	16	169	1.1		19	140	1.3	61.250	GSS04-2M □□□080C13	86
	16	181	2.0		19	149	2.4	61.250	GSS05-2M □□□080C13	86
	14	191	0.9		17	159	1.1	68.200	GSS04-2M □□□080C13	86
	13	211	1.7		16	174	2.0	70.611	GSS05-2M □□□080C13	86
	12	209	0.9		15	174	1.0	77.000	GSS04-2M □□□080C13	86
	12	233	1.5		15	193	1.8	79.722	GSS05-2M □□□080C13	86
	12	224	3.1		15	185	3.8	79.722	GSS06-2M □□□080C13	86
	11	260	1.4		13	215	1.7	87.833	GSS05-2M □□□080C13	86
	11	249	2.8		13	205	3.4	87.833	GSS06-2M □□□080C13	86
	9.6	287	1.3		12	238	1.5	99.167	GSS05-2M □□□080C13	86
	9.6	278	2.5		12	229	3.1	99.167	GSS06-2M □□□080C13	86
	8.4	332	1.1		10	275	1.3	113.667	GSS05-2M □□□080C13	86
	8.4	319	2.2		10	264	2.7	113.667	GSS06-2M □□□080C13	86
	7.6	375	0.9		9.2	312	1.1	125.476	GSS05-3M □□□080C13	102
	7.5	338	2.1		9.2	278	2.5	126.531	GSS06-3M □□□080C13	102
	7.4	366	1.0		9.0	303	1.2	128.333	GSS05-2M □□□080C13	86



Selection tables

50 Hz, 60 Hz: P_N = 0.37 kW

n_N	950 r/min				1160 r/min			i		
f_N	50 Hz				60 Hz					
	n_2 [r/min]	M_2 [Nm]	c		n_2 [r/min]	M_2 [Nm]	c			
	7.4	356	2.0		9.0	294	2.4	128.333	GSS06-2M □□□080C13	86
	6.9	397	0.9		8.4	330	1.1	137.950	GSS05-2M □□□080C13	86
	6.9	385	1.8		8.4	317	2.2	137.950	GSS06-2M □□□080C13	86
	6.9	394	3.1		8.4	325	3.7	137.950	GSS07-2M □□□080C13	86
	6.7	377	1.9		8.1	311	2.3	142.857	GSS06-3M □□□080C13	102
	6.7	386	3.2		8.1	317	3.8	142.857	GSS07-3M □□□080C13	102
	6.1	411	1.7		7.5	339	2.1	155.000	GSS06-3M □□□080C13	102
	6.1	422	2.9		7.5	346	3.5	155.000	GSS07-3M □□□080C13	102
	6.1	437	0.8		7.4	364	1.0	155.750	GSS05-2M □□□080C13	86
	6.1	428	1.7		7.4	354	2.0	155.750	GSS06-2M □□□080C13	86
	6.1	440	2.8		7.4	363	3.3	155.750	GSS07-2M □□□080C13	86
	5.4	482	1.5		6.7	399	1.8	174.375	GSS06-2M □□□080C13	86
	5.4	497	2.5		6.7	408	3.0	174.375	GSS07-2M □□□080C13	86
	5.4	457	1.6		6.6	378	1.9	175.000	GSS06-3M □□□080C13	102
	5.4	470	2.6		6.6	386	3.1	175.000	GSS07-3M □□□080C13	102
	4.9	511	1.4		6.0	423	1.7	194.857	GSS06-3M □□□080C13	102
	4.8	534	1.3		5.9	443	1.6	196.875	GSS06-2M □□□080C13	86
	4.8	553	2.2		5.9	454	2.7	196.875	GSS07-2M □□□080C13	86
	4.7	546	2.3		5.7	449	2.7	201.746	GSS07-3M □□□080C13	102
	4.3	565	1.3		5.3	470	1.5	220.000	GSS06-3M □□□080C13	102
	4.2	607	2.0		5.1	500	2.5	227.778	GSS07-3M □□□080C13	102
	4.0	616	1.2		4.9	512	1.4	238.700	GSS06-3M □□□080C13	102
	3.8	662	1.9		4.7	547	2.2	247.139	GSS07-3M □□□080C13	102
	3.5	679	1.1		4.3	566	1.3	269.500	GSS06-3M □□□080C13	102
	3.4	735	1.7		4.2	608	2.0	279.028	GSS07-3M □□□080C13	102
	3.1	782	0.9		3.7	653	1.1	310.689	GSS06-3M □□□080C13	102
	3.0	846	1.5		3.6	702	1.8	321.673	GSS07-3M □□□080C13	102
	2.7	862	0.8		3.3	720	1.0	350.778	GSS06-3M □□□080C13	102
	2.6	938	1.3		3.2	779	1.6	363.179	GSS07-3M □□□080C13	102
	2.4	1020	1.2		2.9	848	1.5	394.245	GSS07-3M □□□080C13	102
	2.1	1130	1.1		2.6	940	1.3	445.116	GSS07-3M □□□080C13	102
	1.9	1246	1.0		2.4	1036	1.2	490.403	GSS07-3M □□□080C13	102
	1.7	1379	0.9		2.1	1147	1.1	553.681	GSS07-3M □□□080C13	102



Selection tables

50 Hz, 60 Hz: P_N = 0.55 kW

n_N	2630 r/min				3240 r/min			i		
f_N	50 Hz				60 Hz					
	n_2 [r/min]	M_2 [Nm]	c		n_2 [r/min]	M_2 [Nm]	c			
	466	9.6	5.0		575	7.6	6.1	5.639	GSS04-2M □□□071C31	86
	340	13	5.0		419	11	6.1	7.733	GSS04-2M □□□071C31	86
	291	15	5.0		358	12	6.1	9.042	GSS04-2M □□□071C31	86
	266	17	5.7		327	13	7.0	9.897	GSS04-2M □□□071C31	86
	243	19	5.7		299	15	7.0	10.827	GSS04-2M □□□071C31	86
	212	21	5.0		261	17	6.1	12.400	GSS04-2M □□□071C31	86
	190	24	5.2		235	19	6.4	13.810	GSS04-2M □□□071C31	86
	166	27	5.2		204	22	6.0	15.869	GSS04-2M □□□071C31	86
	151	29	4.9		187	24	5.7	17.360	GSS04-2M □□□071C31	86
	129	32	3.6		159	26	4.2	20.417	GSS04-2M □□□071C31	86
	119	38	4.2		146	30	4.8	22.143	GSS04-2M □□□071C31	86
	106	40	3.3		131	32	3.8	24.800	GSS04-2M □□□071C31	86
	97	46	3.6		119	37	4.2	27.125	GSS04-2M □□□071C31	86
	83	51	2.8		102	41	3.2	31.738	GSS04-2M □□□071C31	86
	77	58	3.0		95	47	3.6	34.100	GSS04-2M □□□071C31	86
	67	61	2.4		83	50	2.8	39.200	GSS04-2M □□□071C31	86
	60	75	2.4		74	61	2.9	43.917	GSS04-2M □□□071C31	86
	53	78	2.1		65	64	2.4	50.000	GSS04-2M □□□071C31	86
	48	87	2.0		60	70	2.3	54.250	GSS04-2M □□□071C31	86
	43	95	1.8		53	78	2.1	61.250	GSS04-2M □□□071C31	86
	39	108	1.7		48	88	2.0	68.200	GSS04-2M □□□071C31	86
	37	114	2.7		46	92	3.1	70.611	GSS05-2M □□□071C31	86
	34	119	1.5		42	97	1.8	77.000	GSS04-2M □□□071C31	86
	33	127	2.5		41	102	2.9	79.722	GSS05-2M □□□071C31	86
	30	139	1.3		37	113	1.6	87.833	GSS04-2M □□□071C31	86
	30	142	2.4		37	115	2.7	87.833	GSS05-2M □□□071C31	86
	27	152	1.2		33	125	1.4	99.167	GSS04-2M □□□071C31	86
	27	158	2.2		33	128	2.5	99.167	GSS05-2M □□□071C31	86
	24	175	1.0		29	142	1.3	111.318	GSS04-2M □□□071C31	86
	23	185	1.9		29	150	2.3	113.667	GSS05-2M □□□071C31	86
	21	216	1.3		26	176	1.5	125.476	GSS05-3M □□□071C31	102
	21	191	0.9		26	156	1.1	125.682	GSS04-2M □□□071C31	86
	20	206	1.7		25	166	2.1	128.333	GSS05-2M □□□071C31	86
	19	225	1.6		23	182	2.0	137.950	GSS05-2M □□□071C31	86
	19	217	3.2		23	176	3.9	137.950	GSS06-2M □□□071C31	86
	19	216	0.8		23	177	1.0	139.500	GSS04-2M □□□071C31	86
	17	262	1.1		21	214	1.3	153.708	GSS05-3M □□□071C31	102
	17	232	3.0		21	188	3.7	155.000	GSS06-3M □□□071C31	102
	17	251	1.4		21	203	1.8	155.750	GSS05-2M □□□071C31	86
	17	243	2.9		21	197	3.5	155.750	GSS06-2M □□□071C31	86



Selection tables

50 Hz, 60 Hz: P_N = 0.55 kW

n_N	2630 r/min				3240 r/min			i		
f_N	50 Hz				60 Hz					
	n_2 [r/min]	M_2 [Nm]	c		n_2 [r/min]	M_2 [Nm]	c			
	15	273	2.6		19	222	3.2	174.375	GSS06-2M □□□071C31	86
	15	259	2.7		19	210	3.3	175.000	GSS06-3M □□□071C31	102
	15	287	1.2		18	233	1.5	176.313	GSS05-2M □□□071C31	86
	14	327	1.0		17	267	1.1	193.233	GSS05-3M □□□071C31	102
	13	290	2.4		17	236	3.0	194.857	GSS06-3M □□□071C31	102
	13	305	2.3		16	248	2.8	196.875	GSS06-2M □□□071C31	86
	13	319	1.1		16	260	1.4	199.063	GSS05-2M □□□071C31	86
	12	324	2.2		15	264	2.7	220.000	GSS06-3M □□□071C31	102
	12	348	1.0		15	285	1.3	222.133	GSS05-3M □□□071C31	102
	11	353	2.0		14	288	2.5	238.700	GSS06-3M □□□071C31	102
	10	397	0.9		13	325	1.1	250.952	GSS05-3M □□□071C31	102
	9.8	392	1.8		12	321	2.2	269.500	GSS06-3M □□□071C31	102
	9.4	416	2.9		12	338	3.6	279.028	GSS07-3M □□□071C31	102
	9.3	438	0.8		11	359	1.0	283.333	GSS05-3M □□□071C31	102
	8.5	454	1.6		10	372	1.9	310.689	GSS06-3M □□□071C31	102
	8.2	485	2.5		10	394	3.1	321.673	GSS07-3M □□□071C31	102
	7.5	506	1.4		9.2	413	1.7	350.778	GSS06-3M □□□071C31	102
	7.2	538	2.3		8.9	438	2.8	363.179	GSS07-3M □□□071C31	102
	6.8	561	1.3		8.4	458	1.6	386.467	GSS06-3M □□□071C31	102
	6.7	587	2.1		8.2	482	2.5	394.245	GSS07-3M □□□071C31	102
	6.0	625	1.2		7.4	510	1.4	436.333	GSS06-3M □□□071C31	102
	5.9	654	1.9		7.3	535	2.3	445.116	GSS07-3M □□□071C31	102
	5.4	726	1.7		6.6	591	2.1	490.403	GSS07-3M □□□071C31	102
	5.3	714	1.0		6.5	585	1.2	497.722	GSS06-3M □□□071C31	102
	4.8	808	1.5		5.9	659	1.9	553.681	GSS07-3M □□□071C31	102
	4.7	792	0.9		5.8	650	1.1	561.944	GSS06-3M □□□071C31	102
	4.2	890	0.8		5.1	732	1.0	630.803	GSS06-3M □□□071C31	102
	4.1	930	1.3		5.1	760	1.6	634.639	GSS07-3M □□□071C31	102
	3.7	1033	1.2		4.5	845	1.5	716.528	GSS07-3M □□□071C31	102
	3.2	1201	1.0		3.9	986	1.3	833.556	GSS07-3M □□□071C31	102
	2.8	1331	0.9		3.4	1095	1.1	941.111	GSS07-3M □□□071C31	102
	2.6	1435	0.9		3.2	1182	1.1	1011.633	GSS07-3M □□□071C31	102



Selection tables

50 Hz, 60 Hz: P_N = 0.55 kW

n_N	1405 r/min				1720 r/min			i		
f_N	50 Hz				60 Hz					
	n_2 [r/min]	M_2 [Nm]	c		n_2 [r/min]	M_2 [Nm]	c			
	249	18	4.5		302	15	5.5	5.639	GSS04-2M □□□071C42	86
	182	25	4.5		221	20	5.5	7.733	GSS04-2M □□□071C42	86
	155	29	4.5		189	23	5.5	9.042	GSS04-2M □□□071C42	86
	142	33	4.2		172	26	5.1	9.897	GSS04-2M □□□071C42	86
	130	36	4.2		158	29	5.1	10.827	GSS04-2M □□□071C42	86
	113	39	4.2		138	32	4.8	12.400	GSS04-2M □□□071C42	86
	102	46	3.4		124	37	4.2	13.810	GSS04-2M □□□071C42	86
	89	51	3.5		107	41	4.1	15.869	GSS04-2M □□□071C42	86
	81	55	3.2		98	45	3.8	17.360	GSS04-2M □□□071C42	86
	69	60	2.5		84	49	2.9	20.417	GSS04-2M □□□071C42	86
	64	71	2.5		77	58	3.0	22.143	GSS04-2M □□□071C42	86
	57	74	2.3		69	60	2.6	24.800	GSS04-2M □□□071C42	86
	52	87	2.1		63	71	2.5	27.125	GSS04-2M □□□071C42	86
	44	94	1.9		54	77	2.2	31.738	GSS04-2M □□□071C42	86
	44	95	3.1		54	77	3.6	31.738	GSS05-2M □□□071C42	86
	41	109	1.6		50	89	2.0	34.100	GSS04-2M □□□071C42	86
	40	114	3.1		48	93	3.8	35.306	GSS05-2M □□□071C42	86
	36	114	1.6		44	93	1.9	39.200	GSS04-2M □□□071C42	86
	36	116	2.7		44	94	3.1	39.200	GSS05-2M □□□071C42	86
	32	139	1.3		39	114	1.6	43.917	GSS04-2M □□□071C42	86
	32	143	2.5		39	116	3.0	43.917	GSS05-2M □□□071C42	86
	32	140	3.2		39	114	3.9	43.917	GSS06-2M □□□071C42	86
	28	144	1.2		34	118	1.5	50.000	GSS04-2M □□□071C42	86
	28	149	2.3		34	121	2.7	50.000	GSS05-2M □□□071C42	86
	26	159	1.1		31	131	1.4	54.250	GSS04-2M □□□071C42	86
	26	165	2.2		31	134	2.5	54.250	GSS05-2M □□□071C42	86
	23	174	1.0		28	144	1.3	61.250	GSS04-2M □□□071C42	86
	23	183	1.9		28	149	2.3	61.250	GSS05-2M □□□071C42	86
	21	198	0.9		25	163	1.1	68.200	GSS04-2M □□□071C42	86
	20	215	1.7		24	176	2.0	70.611	GSS05-2M □□□071C42	86
	18	217	0.8		22	179	1.0	77.000	GSS04-2M □□□071C42	86
	18	240	1.5		21	195	1.8	79.722	GSS05-2M □□□071C42	86
	18	232	3.0		21	190	3.7	79.722	GSS06-2M □□□071C42	86
	16	267	1.3		19	219	1.6	87.833	GSS05-2M □□□071C42	86
	16	257	2.7		19	210	3.3	87.833	GSS06-2M □□□071C42	86
	14	297	1.2		17	244	1.5	99.167	GSS05-2M □□□071C42	86
	14	287	2.5		17	235	3.0	99.167	GSS06-2M □□□071C42	86
	12	343	1.0		15	282	1.3	113.667	GSS05-2M □□□071C42	86
	12	330	2.2		15	271	2.6	113.667	GSS06-2M □□□071C42	86
	11	391	0.9		14	323	1.0	125.476	GSS05-3M □□□071C42	102



Selection tables

50 Hz, 60 Hz: P_N = 0.55 kW

n_N	1405 r/min				1720 r/min			i		
f_N	50 Hz				60 Hz					
	n_2 [r/min]	M_2 [Nm]	c		n_2 [r/min]	M_2 [Nm]	c			
	11	349	2.0		14	287	2.5	126.531	GSS06-3M □□□071C42	102
	11	379	1.0		13	313	1.1	128.333	GSS05-2M □□□071C42	86
	11	368	1.9		13	302	2.3	128.333	GSS06-2M □□□071C42	86
	10	413	0.9		12	340	1.1	137.950	GSS05-2M □□□071C42	86
	10	398	1.8		12	327	2.2	137.950	GSS06-2M □□□071C42	86
	9.8	388	1.8		12	320	2.2	142.857	GSS06-3M □□□071C42	102
	9.8	397	3.1		12	325	3.7	142.857	GSS07-3M □□□071C42	102
	9.1	424	1.7		11	349	2.0	155.000	GSS06-3M □□□071C42	102
	9.1	437	2.8		11	356	3.4	155.000	GSS07-3M □□□071C42	102
	9.0	443	1.6		11	364	2.0	155.750	GSS06-2M □□□071C42	86
	8.1	498	1.4		9.8	410	1.7	174.375	GSS06-2M □□□071C42	86
	8.0	472	1.5		9.7	387	1.8	175.000	GSS06-3M □□□071C42	102
	8.0	485	2.5		9.7	397	3.1	175.000	GSS07-3M □□□071C42	102
	7.2	529	1.4		8.8	434	1.6	194.857	GSS06-3M □□□071C42	102
	7.1	553	1.3		8.7	456	1.6	196.875	GSS06-2M □□□071C42	86
	7.0	561	2.2		8.5	463	2.6	201.746	GSS07-3M □□□071C42	102
	6.4	589	1.2		7.8	484	1.5	220.000	GSS06-3M □□□071C42	102
	6.2	625	2.0		7.5	514	2.4	227.778	GSS07-3M □□□071C42	102
	5.9	642	1.1		7.1	528	1.4	238.700	GSS06-3M □□□071C42	102
	5.7	683	1.8		6.9	560	2.2	247.139	GSS07-3M □□□071C42	102
	5.2	712	1.0		6.3	588	1.2	269.500	GSS06-3M □□□071C42	102
	5.0	760	1.6		6.1	625	2.0	279.028	GSS07-3M □□□071C42	102
	4.5	821	0.9		5.5	679	1.1	310.689	GSS06-3M □□□071C42	102
	4.4	881	1.4		5.3	725	1.7	321.673	GSS07-3M □□□071C42	102
	3.9	978	1.3		4.7	806	1.5	363.179	GSS07-3M □□□071C42	102
	3.6	1066	1.2		4.3	881	1.4	394.245	GSS07-3M □□□071C42	102
	3.2	1182	1.1		3.8	978	1.3	445.116	GSS07-3M □□□071C42	102
	2.9	1304	1.0		3.5	1080	1.2	490.403	GSS07-3M □□□071C42	102
	2.5	1445	0.9		3.1	1198	1.0	553.681	GSS07-3M □□□071C42	102



Selection tables

50 Hz, 60 Hz: P_N = 0.55 kW

n_N	930 r/min				1140 r/min			i		
f_N	50 Hz				60 Hz					
	n_2 [r/min]	M_2 [Nm]	c		n_2 [r/min]	M_2 [Nm]	c			
	165	28	3.7		202	23	4.6	5.639	GSS04-2M □□□080C33	86
	120	39	3.7		147	31	4.6	7.733	GSS04-2M □□□080C33	86
	103	43	3.7		126	35	4.5	9.042	GSS04-2M □□□080C33	86
	94	50	3.1		115	40	3.9	9.897	GSS04-2M □□□080C33	86
	86	55	2.9		105	44	3.5	10.827	GSS04-2M □□□080C33	86
	75	60	2.9		92	49	3.6	12.400	GSS04-2M □□□080C33	86
	67	70	2.3		83	57	2.8	13.810	GSS04-2M □□□080C33	86
	59	76	2.3		72	62	2.8	15.869	GSS04-2M □□□080C33	86
	54	84	2.1		66	68	2.6	17.360	GSS04-2M □□□080C33	86
	46	90	2.0		56	73	2.2	20.417	GSS04-2M □□□080C33	86
	46	91	3.2		56	74	3.6	20.417	GSS05-2M □□□080C33	86
	42	107	1.7		51	87	2.0	22.143	GSS04-2M □□□080C33	86
	42	108	3.2		51	88	4.0	22.143	GSS05-2M □□□080C33	86
	38	111	1.6		46	91	2.0	24.800	GSS04-2M □□□080C33	86
	34	130	1.4		42	106	1.7	27.125	GSS04-2M □□□080C33	86
	34	133	2.7		42	108	3.2	27.125	GSS05-2M □□□080C33	86
	29	141	1.3		36	116	1.5	31.738	GSS04-2M □□□080C33	86
	29	145	2.4		36	118	2.8	31.738	GSS05-2M □□□080C33	86
	27	162	1.1		33	133	1.3	34.100	GSS04-2M □□□080C33	86
	26	174	2.0		32	142	2.5	35.306	GSS05-2M □□□080C33	86
	26	169	3.1		32	138	3.8	35.306	GSS06-2M □□□080C33	86
	24	169	1.1		29	139	1.3	39.200	GSS04-2M □□□080C33	86
	24	177	2.0		29	144	2.4	39.200	GSS05-2M □□□080C33	86
	21	207	0.9		26	170	1.1	43.917	GSS04-2M □□□080C33	86
	21	215	1.7		26	176	2.0	43.917	GSS05-2M □□□080C33	86
	21	210	2.6		26	171	3.2	43.917	GSS06-2M □□□080C33	86
	19	213	0.8		23	175	1.0	50.000	GSS04-2M □□□080C33	86
	19	227	1.6		23	185	1.9	50.000	GSS05-2M □□□080C33	86
	19	220	3.2		23	179	3.9	50.000	GSS06-2M □□□080C33	86
	17	250	1.4		21	204	1.8	54.250	GSS05-2M □□□080C33	86
	15	277	1.3		19	227	1.6	61.250	GSS05-2M □□□080C33	86
	13	323	1.1		16	265	1.4	70.611	GSS05-2M □□□080C33	86
	13	310	2.3		16	254	2.8	70.611	GSS06-2M □□□080C33	86
	12	357	1.0		14	294	1.2	79.722	GSS05-2M □□□080C33	86
	12	346	2.1		14	284	2.5	79.722	GSS06-2M □□□080C33	86
	11	397	0.9		13	328	1.1	87.833	GSS05-2M □□□080C33	86
	11	383	1.9		13	314	2.3	87.833	GSS06-2M □□□080C33	86
	9.4	438	0.8		11	362	1.0	99.167	GSS05-2M □□□080C33	86
	9.4	427	1.7		11	351	2.0	99.167	GSS06-2M □□□080C33	86
	8.2	490	1.5		10	403	1.8	113.667	GSS06-2M □□□080C33	86



Selection tables

50 Hz, 60 Hz: P_N = 0.55 kW

n_N	930 r/min				1140 r/min			i		
f_N	50 Hz				60 Hz					
	n_2 [r/min]	M_2 [Nm]	c		n_2 [r/min]	M_2 [Nm]	c			
	8.2	506	2.4		10	414	2.9	113.667	GSS07-2M □□□080C33	86
	7.3	518	1.4		9.0	426	1.7	126.531	GSS06-3M □□□080C33	102
	7.3	532	2.3		9.0	439	2.8	126.531	GSS07-3M □□□080C33	102
	7.2	545	1.3		8.9	449	1.6	128.333	GSS06-2M □□□080C33	86
	7.2	563	2.2		8.9	461	2.7	128.333	GSS07-2M □□□080C33	86
	6.7	590	1.2		8.3	485	1.5	137.950	GSS06-2M □□□080C33	86
	6.7	607	2.0		8.3	499	2.5	137.950	GSS07-2M □□□080C33	86
	6.5	578	1.2		8.0	475	1.5	142.857	GSS06-3M □□□080C33	102
	6.5	594	2.1		8.0	487	2.5	142.857	GSS07-3M □□□080C33	102
	6.0	630	1.1		7.4	518	1.4	155.000	GSS06-3M □□□080C33	102
	6.0	649	1.9		7.4	531	2.3	155.000	GSS07-3M □□□080C33	102
	6.0	656	1.1		7.3	540	1.3	155.750	GSS06-2M □□□080C33	86
	6.0	676	1.8		7.3	557	2.2	155.750	GSS07-2M □□□080C33	86
	5.3	737	1.0		6.5	608	1.2	174.375	GSS06-2M □□□080C33	86
	5.3	763	1.6		6.5	625	2.0	174.375	GSS07-2M □□□080C33	86
	5.3	699	1.0		6.5	577	1.2	175.000	GSS06-3M □□□080C33	102
	5.3	722	1.7		6.5	593	2.1	175.000	GSS07-3M □□□080C33	102
	4.8	780	0.9		5.9	645	1.1	194.857	GSS06-3M □□□080C33	102
	4.7	816	0.9		5.8	675	1.1	196.875	GSS06-2M □□□080C33	86
	4.7	848	1.5		5.8	696	1.8	196.875	GSS07-2M □□□080C33	86
	4.6	837	1.5		5.7	687	1.8	201.746	GSS07-3M □□□080C33	102
	4.2	863	0.8		5.2	716	1.0	220.000	GSS06-3M □□□080C33	102
	4.1	930	1.3		5.0	764	1.6	227.778	GSS07-3M □□□080C33	102
	3.8	1014	1.2		4.6	836	1.5	247.139	GSS07-3M □□□080C33	102
	3.3	1125	1.1		4.1	928	1.3	279.028	GSS07-3M □□□080C33	102
	2.9	1294	1.0		3.5	1071	1.2	321.673	GSS07-3M □□□080C33	102
	2.6	1433	0.9		3.1	1187	1.1	363.179	GSS07-3M □□□080C33	102
	2.4	1558	0.8		2.9	1291	1.0	394.245	GSS07-3M □□□080C33	102



Selection tables

50 Hz, 60 Hz: P_N = 0.75 kW

n_N	1410 r/min				1720 r/min			i		
f_N	50 Hz				60 Hz					
	n_2 [r/min]	M_2 [Nm]	c		n_2 [r/min]	M_2 [Nm]	c			
	250	25	4.2		303	20	5.1	5.639	GSS04-2M □□□080C32	88
	182	34	4.2		221	28	5.1	7.733	GSS04-2M □□□080C32	88
	156	39	3.8		189	32	4.4	9.042	GSS04-2M □□□080C32	88
	143	45	3.5		173	36	4.3	9.897	GSS04-2M □□□080C32	88
	130	49	3.2		158	40	3.9	10.827	GSS04-2M □□□080C32	88
	114	54	3.1		138	44	3.5	12.400	GSS04-2M □□□080C32	88
	102	63	2.5		124	51	3.1	13.810	GSS04-2M □□□080C32	88
	89	69	2.5		108	57	3.0	15.869	GSS04-2M □□□080C32	88
	81	76	2.3		99	62	2.8	17.360	GSS04-2M □□□080C32	88
	69	82	1.9		84	67	2.1	20.417	GSS04-2M □□□080C32	88
	69	81	3.0		84	66	3.5	20.417	GSS05-2M □□□080C32	88
	64	97	1.8		77	79	2.2	22.143	GSS04-2M □□□080C32	88
	57	101	1.7		69	83	1.9	24.800	GSS04-2M □□□080C32	88
	52	118	1.5		63	97	1.8	27.125	GSS04-2M □□□080C32	88
	52	120	2.9		63	98	3.4	27.125	GSS05-2M □□□080C32	88
	44	129	1.4		54	106	1.6	31.738	GSS04-2M □□□080C32	88
	44	131	2.3		54	107	2.6	31.738	GSS05-2M □□□080C32	88
	41	148	1.2		50	122	1.5	34.100	GSS04-2M □□□080C32	88
	40	157	2.3		48	128	2.8	35.306	GSS05-2M □□□080C32	88
	36	155	1.2		44	128	1.4	39.200	GSS04-2M □□□080C32	88
	36	159	2.0		44	130	2.3	39.200	GSS05-2M □□□080C32	88
	32	190	0.9		39	156	1.1	43.917	GSS04-2M □□□080C32	88
	32	196	1.8		39	160	2.2	43.917	GSS05-2M □□□080C32	88
	32	191	2.9		39	156	3.5	43.917	GSS06-2M □□□080C32	88
	28	196	0.9		34	162	1.1	50.000	GSS04-2M □□□080C32	88
	28	204	1.7		34	167	2.0	50.000	GSS05-2M □□□080C32	88
	26	217	0.8		32	179	1.0	54.250	GSS04-2M □□□080C32	88
	26	226	1.6		32	184	1.9	54.250	GSS05-2M □□□080C32	88
	23	251	1.4		28	205	1.7	61.250	GSS05-2M □□□080C32	88
	20	294	1.2		24	241	1.5	70.611	GSS05-2M □□□080C32	88
	20	285	2.5		24	234	3.0	70.611	GSS06-2M □□□080C32	88
	18	328	1.1		21	268	1.3	79.722	GSS05-2M □□□080C32	88
	18	318	2.2		21	262	2.7	79.722	GSS06-2M □□□080C32	88
	16	365	1.0		20	300	1.2	87.833	GSS05-2M □□□080C32	88
	16	352	2.0		20	290	2.4	87.833	GSS06-2M □□□080C32	88
	14	405	0.9		17	334	1.1	99.167	GSS05-2M □□□080C32	88
	14	393	1.8		17	324	2.2	99.167	GSS06-2M □□□080C32	88
	12	451	1.6		15	372	1.9	113.667	GSS06-2M □□□080C32	88
	12	462	2.7		15	379	3.2	113.667	GSS07-2M □□□080C32	88
	11	478	1.5		14	394	1.8	126.531	GSS06-3M □□□080C32	104



Selection tables

50 Hz, 60 Hz: P_N = 0.75 kW

n_N	1410 r/min				1720 r/min			i		
f_N	50 Hz				60 Hz					
	n_2 [r/min]	M_2 [Nm]	c		n_2 [r/min]	M_2 [Nm]	c			
	11	490	2.5		14	402	3.0	126.531	GSS07-3M □□□080C32	104
	11	503	1.4		13	415	1.7	128.333	GSS06-2M □□□080C32	88
	11	515	2.4		13	424	2.9	128.333	GSS07-2M □□□080C32	88
	10	544	1.3		12	449	1.6	137.950	GSS06-2M □□□080C32	88
	10	560	2.2		12	459	2.7	137.950	GSS07-2M □□□080C32	88
	9.9	530	1.4		12	439	1.6	142.857	GSS06-3M □□□080C32	104
	9.9	546	2.3		12	449	2.7	142.857	GSS07-3M □□□080C32	104
	9.1	579	1.2		11	479	1.5	155.000	GSS06-3M □□□080C32	104
	9.1	599	2.1		11	492	2.5	155.000	GSS07-3M □□□080C32	104
	9.1	605	1.2		11	500	1.4	155.750	GSS06-2M □□□080C32	88
	9.1	623	2.0		11	512	2.4	155.750	GSS07-2M □□□080C32	88
	8.1	679	1.1		9.8	561	1.3	174.375	GSS06-2M □□□080C32	88
	8.1	701	1.8		9.8	579	2.1	174.375	GSS07-2M □□□080C32	88
	8.1	645	1.1		9.8	532	1.3	175.000	GSS06-3M □□□080C32	104
	8.1	664	1.9		9.8	547	2.2	175.000	GSS07-3M □□□080C32	104
	7.2	722	1.0		8.8	595	1.2	194.857	GSS06-3M □□□080C32	104
	7.2	755	1.0		8.7	625	1.1	196.875	GSS06-2M □□□080C32	88
	7.2	782	1.6		8.7	644	1.9	196.875	GSS07-2M □□□080C32	88
	7.0	768	1.6		8.5	636	1.9	201.746	GSS07-3M □□□080C32	104
	6.4	803	0.9		7.8	664	1.1	220.000	GSS06-3M □□□080C32	104
	6.2	855	1.5		7.5	707	1.8	227.778	GSS07-3M □□□080C32	104
	5.9	876	0.8		7.2	724	1.0	238.700	GSS06-3M □□□080C32	104
	5.7	935	1.3		6.9	770	1.6	247.139	GSS07-3M □□□080C32	104
	5.1	1039	1.2		6.1	858	1.4	279.028	GSS07-3M □□□080C32	104
	4.4	1203	1.0		5.3	994	1.3	321.673	GSS07-3M □□□080C32	104
	3.9	1335	0.9		4.7	1105	1.1	363.179	GSS07-3M □□□080C32	104
	3.6	1455	0.9		4.3	1207	1.0	394.245	GSS07-3M □□□080C32	104



Selection tables

50 Hz, 60 Hz: P_N = 1.1 kW

n_N	1430 r/min				1740 r/min			i		
f_N	50 Hz				60 Hz					
	n_2 [r/min]	M_2 [Nm]	c		n_2 [r/min]	M_2 [Nm]	c			
	254	36	4.0		307	30	4.2	5.639	GSS04-2M □□□090C12	88
	185	50	3.1		224	41	3.7	7.733	GSS04-2M □□□090C12	88
	158	58	2.6		191	47	3.0	9.042	GSS04-2M □□□090C12	88
	145	65	2.4		175	53	2.9	9.897	GSS04-2M □□□090C12	88
	132	72	2.2		160	58	2.7	10.827	GSS04-2M □□□090C12	88
	115	79	2.1		140	65	2.4	12.400	GSS04-2M □□□090C12	88
	104	92	1.8		125	75	2.1	13.810	GSS04-2M □□□090C12	88
	104	91	3.0		125	74	3.6	13.810	GSS05-2M □□□090C12	88
	90	101	1.8		109	83	2.0	15.869	GSS04-2M □□□090C12	88
	90	101	2.9		109	83	3.3	15.869	GSS05-2M □□□090C12	88
	82	111	1.6		100	91	1.9	17.360	GSS04-2M □□□090C12	88
	82	111	2.7		100	91	3.1	17.360	GSS05-2M □□□090C12	88
	70	119	1.3		85	98	1.5	20.417	GSS04-2M □□□090C12	88
	70	119	2.1		85	97	2.4	20.417	GSS05-2M □□□090C12	88
	65	141	1.3		78	116	1.5	22.143	GSS04-2M □□□090C12	88
	65	142	2.3		78	116	2.7	22.143	GSS05-2M □□□090C12	88
	58	147	1.2		70	121	1.3	24.800	GSS04-2M □□□090C12	88
	58	148	1.9		70	121	2.1	24.800	GSS05-2M □□□090C12	88
	53	172	1.0		64	142	1.3	27.125	GSS04-2M □□□090C12	88
	53	175	2.0		64	143	2.3	27.125	GSS05-2M □□□090C12	88
	45	187	1.0		55	155	1.1	31.738	GSS04-2M □□□090C12	88
	45	191	1.6		55	156	1.8	31.738	GSS05-2M □□□090C12	88
	45	188	3.2		55	155	3.6	31.738	GSS06-2M □□□090C12	88
	41	229	1.6		49	187	1.9	35.306	GSS05-2M □□□090C12	88
	41	223	3.2		49	182	3.8	35.306	GSS06-2M □□□090C12	88
	36	225	0.8		44	186	1.0	39.200	GSS04-2M □□□090C12	88
	37	232	1.4		44	190	1.6	39.200	GSS05-2M □□□090C12	88
	37	231	2.7		44	190	3.1	39.200	GSS06-2M □□□090C12	88
	33	285	1.3		39	234	1.5	43.917	GSS05-2M □□□090C12	88
	33	277	2.6		39	228	3.1	43.917	GSS06-2M □□□090C12	88
	29	297	1.2		35	243	1.3	50.000	GSS05-2M □□□090C12	88
	29	294	2.3		35	242	2.6	50.000	GSS06-2M □□□090C12	88
	26	328	1.1		32	269	1.3	54.250	GSS05-2M □□□090C12	88
	26	321	2.2		32	264	2.6	54.250	GSS06-2M □□□090C12	88
	23	365	1.0		28	299	1.2	61.250	GSS05-2M □□□090C12	88
	23	359	2.0		28	296	2.3	61.250	GSS06-2M □□□090C12	88
	20	427	0.8		25	351	1.0	70.611	GSS05-2M □□□090C12	88
	20	416	1.7		25	343	2.1	70.611	GSS06-2M □□□090C12	88
	20	421	2.9		25	346	3.5	70.611	GSS07-2M □□□090C12	88
	18	464	1.5		22	383	1.9	79.722	GSS06-2M □□□090C12	88



Selection tables

50 Hz, 60 Hz: P_N = 1.1 kW

n_N	1430 r/min				1740 r/min			i		
f_N	50 Hz				60 Hz					
	n_2 [r/min]	M_2 [Nm]	c		n_2 [r/min]	M_2 [Nm]	c			
	18	473	2.6		22	389	3.1	79.722	GSS07-2M □□□090C12	88
	17	515	2.4		20	424	2.9	86.542	GSS07-2M □□□090C12	88
	16	513	1.4		20	424	1.7	87.833	GSS06-2M □□□090C12	88
	15	577	2.1		18	476	2.6	97.708	GSS07-2M □□□090C12	88
	14	572	1.3		17	473	1.5	99.167	GSS06-2M □□□090C12	88
	13	657	1.1		15	544	1.3	113.667	GSS06-2M □□□090C12	88
	13	674	1.8		15	556	2.2	113.667	GSS07-2M □□□090C12	88
	11	695	1.0		14	576	1.2	126.531	GSS06-3M □□□090C12	104
	11	715	1.7		14	589	2.1	126.531	GSS07-3M □□□090C12	104
	11	731	1.0		14	606	1.2	128.333	GSS06-2M □□□090C12	88
	11	752	1.6		14	621	2.0	128.333	GSS07-2M □□□090C12	88
	10	791	0.9		13	655	1.1	137.950	GSS06-2M □□□090C12	88
	10	816	1.5		13	672	1.8	137.950	GSS07-2M □□□090C12	88
	10	771	0.9		12	641	1.1	142.857	GSS06-3M □□□090C12	104
	10	796	1.6		12	658	1.9	142.857	GSS07-3M □□□090C12	104
	9.2	842	0.9		11	699	1.0	155.000	GSS06-3M □□□090C12	104
	9.2	874	1.4		11	720	1.7	155.000	GSS07-3M □□□090C12	104
	9.2	880	0.8		11	729	1.0	155.750	GSS06-2M □□□090C12	88
	9.2	907	1.4		11	750	1.7	155.750	GSS07-2M □□□090C12	88
	8.2	1021	1.2		9.9	847	1.5	174.375	GSS07-2M □□□090C12	88
	8.2	968	1.3		9.9	801	1.6	175.000	GSS07-3M □□□090C12	104
	7.3	1137	1.1		8.8	941	1.3	196.875	GSS07-2M □□□090C12	88
	7.1	1117	1.1		8.6	930	1.3	201.746	GSS07-3M □□□090C12	104
	6.3	1244	1.0		7.6	1032	1.2	227.778	GSS07-3M □□□090C12	104
	5.8	1359	0.9		7.0	1124	1.1	247.139	GSS07-3M □□□090C12	104
	5.1	1510	0.8		6.2	1251	1.0	279.028	GSS07-3M □□□090C12	104



Selection tables

50 Hz, 60 Hz: P_N = 1.5 kW

n_N	1435 r/min				1745 r/min			i		
f_N	50 Hz				60 Hz					
	n_2 [r/min]	M_2 [Nm]	c		n_2 [r/min]	M_2 [Nm]	c			
	255	50	2.9		308	41	3.1	5.639	GSS04-2M □□□090C32	88
	186	69	2.3		224	57	2.7	7.733	GSS04-2M □□□090C32	88
	159	79	1.9		192	65	2.2	9.042	GSS04-2M □□□090C32	88
	159	78	3.1		192	64	3.6	9.042	GSS05-2M □□□090C32	88
	145	89	1.8		175	73	2.2	9.897	GSS04-2M □□□090C32	88
	145	88	3.0		175	72	3.6	9.897	GSS05-2M □□□090C32	88
	133	98	1.6		160	80	2.0	10.827	GSS04-2M □□□090C32	88
	133	97	2.8		160	79	3.3	10.827	GSS05-2M □□□090C32	88
	116	108	1.6		140	89	1.8	12.400	GSS04-2M □□□090C32	88
	116	108	2.5		140	88	2.9	12.400	GSS05-2M □□□090C32	88
	104	126	1.3		126	103	1.6	13.810	GSS04-2M □□□090C32	88
	104	125	2.2		126	102	2.6	13.810	GSS05-2M □□□090C32	88
	90	138	1.3		109	114	1.5	15.869	GSS04-2M □□□090C32	88
	90	139	2.1		109	114	2.4	15.869	GSS05-2M □□□090C32	88
	83	151	1.2		100	124	1.4	17.360	GSS04-2M □□□090C32	88
	83	152	2.0		100	125	2.3	17.360	GSS05-2M □□□090C32	88
	70	163	0.9		85	134	1.1	20.417	GSS04-2M □□□090C32	88
	70	163	1.5		85	133	1.8	20.417	GSS05-2M □□□090C32	88
	65	192	0.9		78	158	1.1	22.143	GSS04-2M □□□090C32	88
	65	195	1.7		78	160	2.0	22.143	GSS05-2M □□□090C32	88
	58	201	0.8		70	166	1.0	24.800	GSS04-2M □□□090C32	88
	58	203	1.4		70	166	1.6	24.800	GSS05-2M □□□090C32	88
	53	239	1.5		64	196	1.7	27.125	GSS05-2M □□□090C32	88
	53	234	3.0		64	192	3.4	27.125	GSS06-2M □□□090C32	88
	45	261	1.2		55	214	1.3	31.738	GSS05-2M □□□090C32	88
	45	258	2.3		55	213	2.6	31.738	GSS06-2M □□□090C32	88
	41	312	1.2		49	256	1.4	35.306	GSS05-2M □□□090C32	88
	41	305	2.3		49	251	2.8	35.306	GSS06-2M □□□090C32	88
	37	317	1.0		44	260	1.2	39.200	GSS05-2M □□□090C32	88
	37	316	2.0		44	261	2.3	39.200	GSS06-2M □□□090C32	88
	33	375	2.9		40	308	3.6	43.271	GSS07-2M □□□090C32	88
	33	389	0.9		40	319	1.1	43.917	GSS05-2M □□□090C32	88
	33	379	1.9		40	312	2.3	43.917	GSS06-2M □□□090C32	88
	29	405	0.9		35	332	1.0	50.000	GSS05-2M □□□090C32	88
	29	403	1.7		35	332	1.9	50.000	GSS06-2M □□□090C32	88
	29	407	3.0		35	334	3.5	50.000	GSS07-2M □□□090C32	88
	26	447	0.8		32	367	0.9	54.250	GSS05-2M □□□090C32	88
	27	439	1.6		32	362	1.9	54.250	GSS06-2M □□□090C32	88
	23	491	1.5		28	405	1.7	61.250	GSS06-2M □□□090C32	88
	20	568	1.3		25	469	1.5	70.611	GSS06-2M □□□090C32	88



Selection tables

50 Hz, 60 Hz: P_N = 1.5 kW

n_N	1435 r/min				1745 r/min			i		
f_N	50 Hz				60 Hz					
	n_2 [r/min]	M_2 [Nm]	c		n_2 [r/min]	M_2 [Nm]	c			
	20	578	2.1		25	476	2.6	70.611	GSS07-2M □□□090C32	88
	18	634	1.1		22	524	1.4	79.722	GSS06-2M □□□090C32	88
	18	648	1.9		22	534	2.3	79.722	GSS07-2M □□□090C32	88
	17	706	1.8		20	582	2.1	86.542	GSS07-2M □□□090C32	88
	16	700	1.0		20	580	1.2	87.833	GSS06-2M □□□090C32	88
	15	790	1.6		18	652	1.9	97.708	GSS07-2M □□□090C32	88
	15	780	0.9		18	647	1.1	99.167	GSS06-2M □□□090C32	88
	13	896	0.8		15	743	1.0	113.667	GSS06-2M □□□090C32	88
	13	922	1.4		15	761	1.6	113.667	GSS07-2M □□□090C32	88
	11	978	1.3		14	807	1.5	126.531	GSS07-3M □□□090C32	104
	11	1028	1.2		14	850	1.5	128.333	GSS07-2M □□□090C32	88
	10	1114	1.1		13	920	1.4	137.950	GSS07-2M □□□090C32	88
	10	1088	1.1		12	901	1.4	142.857	GSS07-3M □□□090C32	104
	9.3	1193	1.0		11	984	1.3	155.000	GSS07-3M □□□090C32	104
	9.2	1238	1.0		11	1025	1.2	155.750	GSS07-2M □□□090C32	88
	8.2	1392	0.9		10	1157	1.1	174.375	GSS07-2M □□□090C32	88
	8.2	1321	0.9		9.9	1094	1.1	175.000	GSS07-3M □□□090C32	104
	7.3	1551	0.8		8.8	1284	1.0	196.875	GSS07-2M □□□090C32	88
	7.1	1524	0.8		8.6	1270	1.0	201.746	GSS07-3M □□□090C32	104



Selection tables

50 Hz, 60 Hz: P_N = 2.2 kW

n_N	1445 r/min				1750 r/min			i		
f_N	50 Hz				60 Hz					
	n_2 [r/min]	M_2 [Nm]	c		n_2 [r/min]	M_2 [Nm]	c			
	256	73	3.0		310	60	3.2	5.639	GSS05-2M □□□100C12	88
	187	101	2.6		226	83	2.9	7.733	GSS05-2M □□□100C12	88
	160	115	2.2		193	94	2.5	9.042	GSS05-2M □□□100C12	88
	146	130	2.1		176	107	2.5	9.897	GSS05-2M □□□100C12	88
	134	143	1.9		161	117	2.3	10.827	GSS05-2M □□□100C12	88
	117	159	1.7		141	131	2.0	12.400	GSS05-2M □□□100C12	88
	117	157	3.2		141	130	3.4	12.400	GSS06-2M □□□100C12	88
	105	183	1.5		126	151	1.8	13.810	GSS05-2M □□□100C12	88
	101	188	2.8		122	154	3.3	14.286	GSS06-2M □□□100C12	88
	91	204	1.5		110	168	1.7	15.869	GSS05-2M □□□100C12	88
	91	202	2.9		110	166	3.2	15.869	GSS06-2M □□□100C12	88
	83	223	1.4		101	184	1.6	17.360	GSS05-2M □□□100C12	88
	83	221	2.8		101	182	3.1	17.360	GSS06-2M □□□100C12	88
	71	239	1.1		86	196	1.2	20.417	GSS05-2M □□□100C12	88
	71	243	2.0		86	201	2.1	20.417	GSS06-2M □□□100C12	88
	65	285	1.2		79	235	1.3	22.143	GSS05-2M □□□100C12	88
	65	281	2.4		79	232	2.7	22.143	GSS06-2M □□□100C12	88
	58	297	0.9		70	245	1.1	24.800	GSS05-2M □□□100C12	88
	58	297	1.9		70	246	2.0	24.800	GSS06-2M □□□100C12	88
	53	350	1.0		64	289	1.2	27.125	GSS05-2M □□□100C12	88
	53	345	2.1		64	285	2.3	27.125	GSS06-2M □□□100C12	88
	47	375	2.8		56	309	2.9	31.000	GSS07-2M □□□100C12	88
	46	381	0.8		55	314	0.9	31.738	GSS05-2M □□□100C12	88
	46	379	1.6		55	314	1.8	31.738	GSS06-2M □□□100C12	88
	41	449	1.6		49	371	1.9	35.306	GSS06-2M □□□100C12	88
	41	449	2.7		49	370	3.3	35.306	GSS07-2M □□□100C12	88
	37	464	1.4		45	385	1.5	39.200	GSS06-2M □□□100C12	88
	37	470	2.5		45	388	2.7	39.200	GSS07-2M □□□100C12	88
	33	550	2.2		40	454	2.7	43.271	GSS07-2M □□□100C12	88
	33	556	1.3		40	461	1.6	43.917	GSS06-2M □□□100C12	88
	29	590	1.2		35	489	1.3	50.000	GSS06-2M □□□100C12	88
	29	599	2.1		35	495	2.4	50.000	GSS07-2M □□□100C12	88
	27	644	1.1		32	534	1.3	54.250	GSS06-2M □□□100C12	88
	27	655	1.9		32	541	2.3	54.250	GSS07-2M □□□100C12	88
	24	719	1.0		29	597	1.2	61.250	GSS06-2M □□□100C12	88
	24	734	1.7		29	606	2.0	61.250	GSS07-2M □□□100C12	88
	21	831	0.9		25	691	1.0	70.611	GSS06-2M □□□100C12	88
	21	848	1.5		25	703	1.8	70.611	GSS07-2M □□□100C12	88
	18	950	1.3		22	787	1.6	79.722	GSS07-2M □□□100C12	88
	17	1035	1.2		20	858	1.4	86.542	GSS07-2M □□□100C12	88



Selection tables

50 Hz, 60 Hz: P_N = 2.2 kW

n_N	1445 r/min				1750 r/min			i		
f_N	50 Hz				60 Hz					
	n_2 [r/min]	M_2 [Nm]	c		n_2 [r/min]	M_2 [Nm]	c			
	15	1157	1.1		18	961	1.3	97.708	GSS07-2M □□□100C12	88
	13	1350	0.9		15	1120	1.1	113.667	GSS07-2M □□□100C12	88
	11	1431	0.9		14	1187	1.1	126.531	GSS07-3M □□□100C12	104
	11	1504	0.8		14	1251	1.0	128.333	GSS07-2M □□□100C12	88



Selection tables

50 Hz, 60 Hz: P_N = 3.0 kW

n_N	1445 r/min				1755 r/min			i		
f_N	50 Hz				60 Hz					
	n_2 [r/min]	M_2 [Nm]	c		n_2 [r/min]	M_2 [Nm]	c			
	256	101	2.2		310	82	2.3	5.639	GSS05-2M □□□100C32	88
	187	139	1.9		226	114	2.1	7.733	GSS05-2M □□□100C32	88
	160	158	1.6		193	129	1.8	9.042	GSS05-2M □□□100C32	88
	160	158	2.6		193	130	2.8	9.042	GSS06-2M □□□100C32	88
	146	179	1.5		176	146	1.8	9.897	GSS05-2M □□□100C32	88
	141	183	2.8		170	150	3.3	10.238	GSS06-2M □□□100C32	88
	134	196	1.4		161	160	1.7	10.827	GSS05-2M □□□100C32	88
	129	201	2.6		156	164	3.1	11.200	GSS06-2M □□□100C32	88
	117	217	1.3		141	178	1.5	12.400	GSS05-2M □□□100C32	88
	117	217	2.4		141	179	2.5	12.400	GSS06-2M □□□100C32	88
	105	251	1.1		126	206	1.3	13.810	GSS05-2M □□□100C32	88
	101	258	2.0		122	212	2.5	14.286	GSS06-2M □□□100C32	88
	91	279	1.1		110	229	1.2	15.869	GSS05-2M □□□100C32	88
	91	278	2.2		110	228	2.4	15.869	GSS06-2M □□□100C32	88
	83	305	1.0		101	251	1.2	17.360	GSS05-2M □□□100C32	88
	83	304	2.0		101	250	2.3	17.360	GSS06-2M □□□100C32	88
	71	334	1.5		86	275	1.5	20.417	GSS06-2M □□□100C32	88
	65	390	0.9		79	321	1.0	22.143	GSS05-2M □□□100C32	88
	65	386	1.7		79	318	2.0	22.143	GSS06-2M □□□100C32	88
	65	385	3.1		79	317	3.3	22.143	GSS07-2M □□□100C32	88
	58	408	1.4		70	336	1.5	24.800	GSS06-2M □□□100C32	88
	53	473	1.5		64	390	1.7	27.125	GSS06-2M □□□100C32	88
	53	473	2.6		64	388	3.1	27.125	GSS07-2M □□□100C32	88
	47	515	2.0		56	424	2.2	31.000	GSS07-2M □□□100C32	88
	46	520	1.2		55	430	1.3	31.738	GSS06-2M □□□100C32	88
	41	615	1.2		49	507	1.4	35.306	GSS06-2M □□□100C32	88
	41	617	2.0		49	507	2.4	35.306	GSS07-2M □□□100C32	88
	37	636	1.0		45	526	1.1	39.200	GSS06-2M □□□100C32	88
	37	646	1.8		45	532	2.0	39.200	GSS07-2M □□□100C32	88
	33	756	1.6		40	623	2.0	43.271	GSS07-2M □□□100C32	88
	33	761	0.9		40	629	1.1	43.917	GSS06-2M □□□100C32	88
	29	808	0.9		35	667	1.0	50.000	GSS06-2M □□□100C32	88
	29	822	1.5		35	678	1.8	50.000	GSS07-2M □□□100C32	88
	27	881	0.8		32	729	0.9	54.250	GSS06-2M □□□100C32	88
	27	898	1.4		32	741	1.7	54.250	GSS07-2M □□□100C32	88
	24	1006	1.2		29	829	1.5	61.250	GSS07-2M □□□100C32	88
	21	1162	1.1		25	961	1.3	70.611	GSS07-2M □□□100C32	88
	18	1301	1.0		22	1076	1.2	79.722	GSS07-2M □□□100C32	88
	17	1417	0.9		20	1172	1.1	86.542	GSS07-2M □□□100C32	88



Selection tables

50 Hz, 60 Hz: P_N = 4.0 kW

n_N	1455 r/min				1760 r/min			i		
f_N	50 Hz				60 Hz					
	n_2 [r/min]	M_2 [Nm]	c		n_2 [r/min]	M_2 [Nm]	c			
	249	138	2.5		301	114	2.7	5.833	GSS06-2M □□□112C22	88
	182	190	2.5		219	157	2.4	8.000	GSS06-2M □□□112C22	88
	161	211	2.0		194	174	2.1	9.042	GSS06-2M □□□112C22	88
	160	211	2.9		193	174	3.1	9.086	GSS07-2M □□□112C22	88
	142	245	2.1		171	201	2.5	10.238	GSS06-2M □□□112C22	88
	130	268	1.9		157	221	2.3	11.200	GSS06-2M □□□112C22	88
	130	267	3.2		157	220	3.4	11.200	GSS07-2M □□□112C22	88
	117	289	1.8		142	239	1.9	12.400	GSS06-2M □□□112C22	88
	116	293	2.7		139	242	2.8	12.594	GSS07-2M □□□112C22	88
	102	344	1.5		123	283	1.8	14.286	GSS06-2M □□□112C22	88
	102	343	2.6		123	282	3.1	14.286	GSS07-2M □□□112C22	88
	94	361	2.5		113	298	2.7	15.500	GSS07-2M □□□112C22	88
	92	370	1.6		111	306	1.8	15.869	GSS06-2M □□□112C22	88
	84	404	1.5		101	334	1.7	17.360	GSS06-2M □□□112C22	88
	84	404	2.5		101	334	2.6	17.360	GSS07-2M □□□112C22	88
	71	444	1.1		86	367	1.2	20.417	GSS06-2M □□□112C22	88
	71	451	1.7		86	373	1.8	20.517	GSS07-2M □□□112C22	88
	66	514	1.3		79	426	1.5	22.143	GSS06-2M □□□112C22	88
	66	514	2.3		79	426	2.4	22.143	GSS07-2M □□□112C22	88
	59	542	1.0		71	449	1.1	24.800	GSS06-2M □□□112C22	88
	58	558	1.6		70	462	1.7	25.188	GSS07-2M □□□112C22	88
	54	629	1.1		65	521	1.3	27.125	GSS06-2M □□□112C22	88
	54	631	2.0		65	521	2.3	27.125	GSS07-2M □□□112C22	88
	47	686	1.5		57	568	1.6	31.000	GSS07-2M □□□112C22	88
	46	691	0.9		55	573	1.0	31.738	GSS06-2M □□□112C22	88
	41	822	1.5		50	679	1.8	35.306	GSS07-2M □□□112C22	88
	37	859	1.4		45	711	1.5	39.200	GSS07-2M □□□112C22	88
	34	1005	1.2		41	832	1.5	43.271	GSS07-2M □□□112C22	88
	29	1094	1.1		35	906	1.3	50.000	GSS07-2M □□□112C22	88
	27	1194	1.0		32	990	1.3	54.250	GSS07-2M □□□112C22	88
	24	1337	0.9		29	1107	1.1	61.250	GSS07-2M □□□112C22	88
	21	1544	0.8		25	1282	1.0	70.611	GSS07-2M □□□112C22	88



Selection tables

50 Hz, 60 Hz: P_N = 5.5 kW

n_N	1470 r/min				1775 r/min			i		
f_N	50 Hz				60 Hz					
	n_2 [r/min]	M_2 [Nm]	c		n_2 [r/min]	M_2 [Nm]	c			
	252	189	1.9		303	156	2.0	5.833	GSS06-2M□□□132C12	88
	251	190	2.8		302	157	2.9	5.862	GSS07-2M □□□132C12	88
	184	260	1.9		221	216	1.8	8.000	GSS06-2M□□□132C12	88
	181	265	2.5		218	219	2.7	8.125	GSS07-2M □□□132C12	88
	163	289	1.4		196	239	1.5	9.042	GSS06-2M□□□132C12	88
	162	290	2.1		195	240	2.3	9.086	GSS07-2M □□□132C12	88
	147	327	2.4		177	270	2.5	10.000	GSS07-2M □□□132C12	88
	144	335	1.5		173	276	1.8	10.238	GSS06-2M□□□132C12	88
	131	367	1.4		158	303	1.7	11.200	GSS06-2M□□□132C12	88
	131	367	2.3		158	303	2.5	11.200	GSS07-2M □□□132C12	88
	119	395	1.3		143	328	1.4	12.400	GSS06-2M□□□132C12	88
	117	402	2.0		141	333	2.1	12.594	GSS07-2M □□□132C12	88
	103	470	1.1		124	388	1.4	14.286	GSS06-2M□□□132C12	88
	103	469	2.2		124	387	2.3	14.286	GSS07-2M □□□132C12	88
	95	495	1.9		114	410	2.0	15.500	GSS07-2M □□□132C12	88
	93	506	1.2		112	419	1.3	15.869	GSS06-2M□□□132C12	88
	85	553	1.1		102	458	1.3	17.360	GSS06-2M□□□132C12	88
	85	554	1.8		102	459	1.9	17.360	GSS07-2M □□□132C12	88
	72	606	0.8		87	503	0.9	20.417	GSS06-2M□□□132C12	88
	72	618	1.2		86	512	1.3	20.517	GSS07-2M □□□132C12	88
	66	702	1.0		80	583	1.1	22.143	GSS06-2M□□□132C12	88
	66	705	1.7		80	584	1.8	22.143	GSS07-2M □□□132C12	88
	58	763	1.2		70	633	1.3	25.188	GSS07-2M □□□132C12	88
	54	859	0.8		65	713	0.9	27.125	GSS06-2M□□□132C12	88
	54	864	1.4		65	715	1.7	27.125	GSS07-2M □□□132C12	88
	47	939	1.1		57	778	1.2	31.000	GSS07-2M □□□132C12	88
	42	1123	1.1		50	931	1.3	35.306	GSS07-2M □□□132C12	88
	38	1175	1.0		45	974	1.1	39.200	GSS07-2M □□□132C12	88
	29	1494	0.8		35	1240	1.0	50.000	GSS07-2M □□□132C12	88



Selection tables

50 Hz, 60 Hz: P_N = 7.5 kW

n_N	1460 r/min				1765 r/min			i		
f_N	50 Hz				60 Hz					
	n_2 [r/min]	M_2 [Nm]	c		n_2 [r/min]	M_2 [Nm]	c			
	250	261	1.4		302	216	1.4	5.833	GSS06-2M□□□132C22	88
	249	263	2.0		300	217	2.1	5.862	GSS07-2M □□□132C22	88
	183	360	1.4		220	297	1.3	8.000	GSS06-2M□□□132C22	88
	180	366	1.9		217	303	2.0	8.125	GSS07-2M □□□132C22	88
	162	398	1.0		195	329	1.1	9.042	GSS06-2M□□□132C22	88
	161	401	1.6		194	331	1.6	9.086	GSS07-2M □□□132C22	88
	146	452	1.8		176	373	1.9	10.000	GSS07-2M □□□132C22	88
	143	462	1.1		172	381	1.3	10.238	GSS06-2M□□□132C22	88
	130	506	1.0		157	417	1.3	11.200	GSS06-2M□□□132C22	88
	130	507	1.7		157	418	1.8	11.200	GSS07-2M □□□132C22	88
	118	545	1.0		142	451	1.0	12.400	GSS06-2M□□□132C22	88
	116	555	1.4		140	459	1.5	12.594	GSS07-2M □□□132C22	88
	102	648	0.8		123	534	1.0	14.286	GSS06-2M□□□132C22	88
	102	647	1.6		123	535	1.7	14.286	GSS07-2M □□□132C22	88
	94	683	1.4		114	565	1.4	15.500	GSS07-2M □□□132C22	88
	92	697	0.9		111	577	1.0	15.869	GSS06-2M□□□132C22	88
	84	762	0.8		102	630	0.9	17.360	GSS06-2M□□□132C22	88
	84	765	1.3		101	633	1.4	17.360	GSS07-2M □□□132C22	88
	71	851	0.9		86	705	1.0	20.517	GSS07-2M □□□132C22	88
	66	972	1.2		80	806	1.3	22.143	GSS07-2M □□□132C22	88
	58	1052	0.9		70	872	0.9	25.188	GSS07-2M □□□132C22	88
	54	1191	1.0		65	985	1.2	27.125	GSS07-2M □□□132C22	88
	47	1293	0.8		57	1071	0.9	31.000	GSS07-2M □□□132C22	88
	41	1547	0.8		50	1282	1.0	35.306	GSS07-2M □□□132C22	88



Selection tables

50 Hz, 60 Hz: P_N = 11.0 kW

n_N	1470 r/min				1775 r/min			i		
f_N	50 Hz				60 Hz					
	n_2 [r/min]	M_2 [Nm]	c		n_2 [r/min]	M_2 [Nm]	c			
	251	386	1.4		302	319	1.5	5.862	GSS07-2M □□□160C22	88
	181	537	1.3		218	444	1.3	8.125	GSS07-2M □□□160C22	88
	162	587	1.1		195	486	1.1	9.086	GSS07-2M □□□160C22	88
	147	662	1.2		177	548	1.3	10.000	GSS07-2M □□□160C22	88
	131	742	1.2		158	614	1.2	11.200	GSS07-2M □□□160C22	88
	117	813	1.0		141	673	1.0	12.594	GSS07-2M □□□160C22	88
	95	1000	0.9		114	829	1.0	15.500	GSS07-2M □□□160C22	88
	85	1119	0.9		102	928	1.0	17.360	GSS07-2M □□□160C22	88



Selection tables

50 Hz, 60 Hz: P_N = 15.0 kW

n_N	1470 r/min				1775 r/min			i		
f_N	50 Hz				60 Hz					
	n_2 [r/min]	M_2 [Nm]	c		n_2 [r/min]	M_2 [Nm]	c			
	251	529	1.0		302	437	1.1	5.862	GSS07-2M □□□160C32	88
	181	735	0.9		218	608	1.0	8.125	GSS07-2M □□□160C32	88
	147	906	0.9		178	749	0.9	10.000	GSS07-2M □□□160C32	88
	131	1015	0.9		158	840	0.9	11.200	GSS07-2M □□□160C32	88





Dimensions

GSS□□-2M H□R

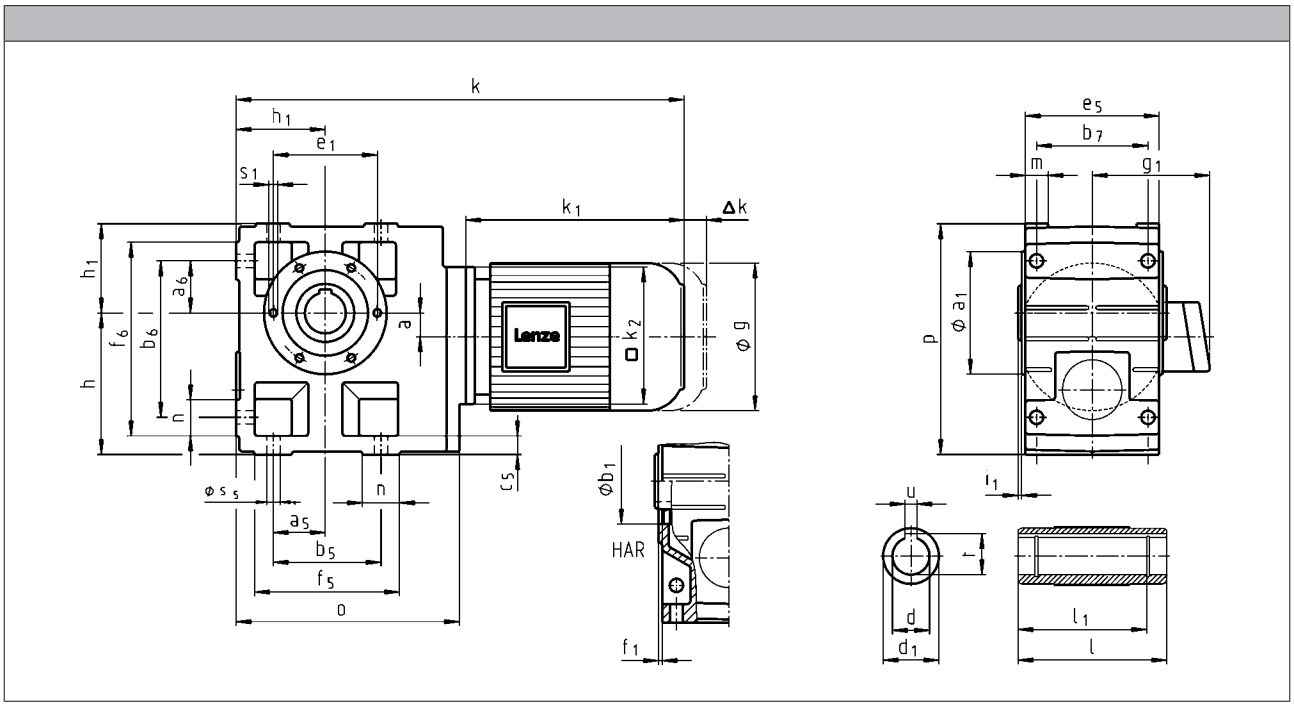



		063C11 063C12 063C31 063C32	063C42	071C11	071C13 071C31 071C32 071C33 071C42	080C13 080C33
g		123		139		156
g_1	MDEMAXX	100		109		150
	MDEMABR	107		118		132
k_1	MDEMAXX	187		207		224.5
k_2		120				145
Δ k	MDEMABR	40		52		73
	MDFMAXX	128				
	MDFMABR	170		165		183
		k				
GSS04		377		397		420
GSS05			399	419		441
GSS06			439		459	481
GSS07						524

	a	h[1)]	h_1	o	p[1)]
GSS04	20	100	71	181	171
GSS05	23	125	80	212	205
GSS06	26	150	100	255	250
GSS07	33	190	120	305	310

	d	d_1	l[1)]	l_1	u	t	i_1	a_1	b_1	e_1	f_1	s_1
	H7				JS9	+0,2			H7			
GSS04	25 30	45 45	115 115	100 100	8 8	28.3 33.3	2.5 2.5	104	75	90	3	M6x12
GSS05	30 35	50 50	140 140	124 124	8 10	33.3 38.3	4 4	118	80	100	4	M8x15
GSS06	40 45	65 65	160 160	140 140	12 14	43.3 48.8	5 5	140	100	120	4	M10x16
GSS07	50 55	75 75	200 200	175 175	14 16	53.8 59.3	5 5	165	115	140	5	M12x18

	a_5	a_6	b_5	b_6	b_7	c_5	e_5	f_5	f_6	m	n	s_5
GSS04	45	45	90	119	85	14	100	112	141	20	22	9
GSS05	47.5	47.5	95	140	105	17	115	124	169	21	29	11
GSS06	60	60	120	170	120	20	145	156	206	23	36	14
GSS07	70	70	140	210	150	25	180	185	255	28	45	18

[1)] k_2 !



Dimensions

GSS□□-2M H□R

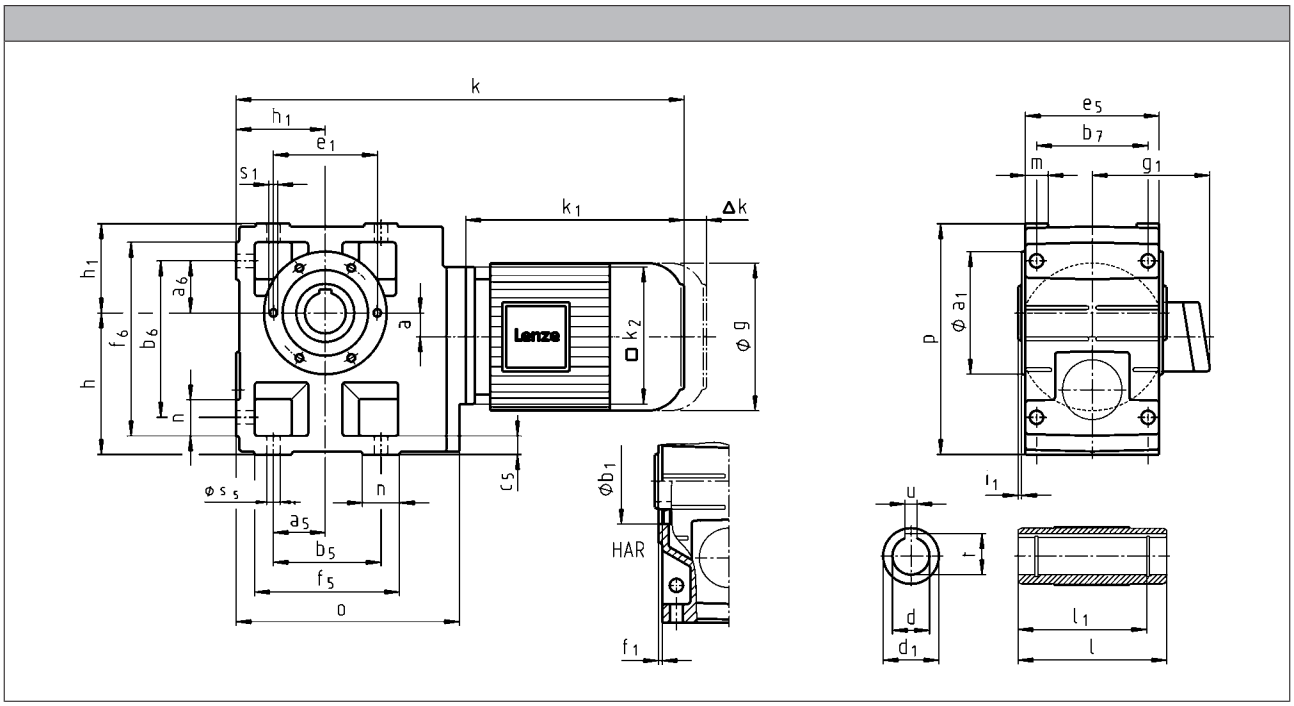

		080C32	090C12	090C32	100C12
g		156	176		194
g_1	MHEMAXX	150	152	157	166
	MHEMABR	132	137		147
k_1	MHEMAXX	224.5	274		309
k_2		145	180		
Δ k	MHEMABR	73	68		76
	MHFMAXX	128			109
	MHFMABR	183	181		170
		k			
GSS04		420	479		
GSS05		441	501		536
GSS06		481	541		576
GSS07		524	584		619



		100C32	112C22	132C12 132C22	160C22	160C32
g		194	218	258	310	
g_1	MHEMAXX	166	176	195	210	
	MHEMABR	147	158	187	210	
k_1	MHEMAXX	324	363	403	457.5	501.5
k_2		180	222	265	300	
Δ k	MHEMABR	76	90	109.5	105	
	MHFMAXX	109	102	115	149	
	MHFMABR	170	183	201.5	179	
		k				
GSS05		551				
GSS06		591	636	684		
GSS07		634	679	727	786	830

	a	h[1)]	h_1	o	p[1)]
GSS04	20	100	71	181	171
GSS05	23	125	80	212	205
GSS06	26	150	100	255	250
GSS07	33	190	120	305	310

	d	d_1	l[1)]	l_1	u	t	i_1	a_1	b_1	e_1	f_1	s_1
	H7				JS9	+0,2			H7			
GSS04	25 30	45 45	115 115	100 100	8 8	28.3 33.3	2.5 2.5	104	75	90	3	M6x12
GSS05	30 35	50 50	140 140	124 124	8 10	33.3 38.3	4 4	118	80	100	4	M8x15
GSS06	40 45	65 65	160 160	140 140	12 14	43.3 48.8	5 5	140	100	120	4	M10x16
GSS07	50 55	75 75	200 200	175 175	14 16	53.8 59.3	5 5	165	115	140	5	M12x18

	a_5	a_6	b_5	b_6	b_7	c_5	e_5	f_5	f_6	m	n	s_5
GSS04	45	45	90	119	85	14	100	112	141	20	22	9
GSS05	47.5	47.5	95	140	105	17	115	124	169	21	29	11
GSS06	60	60	120	170	120	20	145	156	206	23	36	14
GSS07	70	70	140	210	150	25	180	185	255	28	45	18

[1)] k_2 !

Dimensions

GSS□□-2M HAK

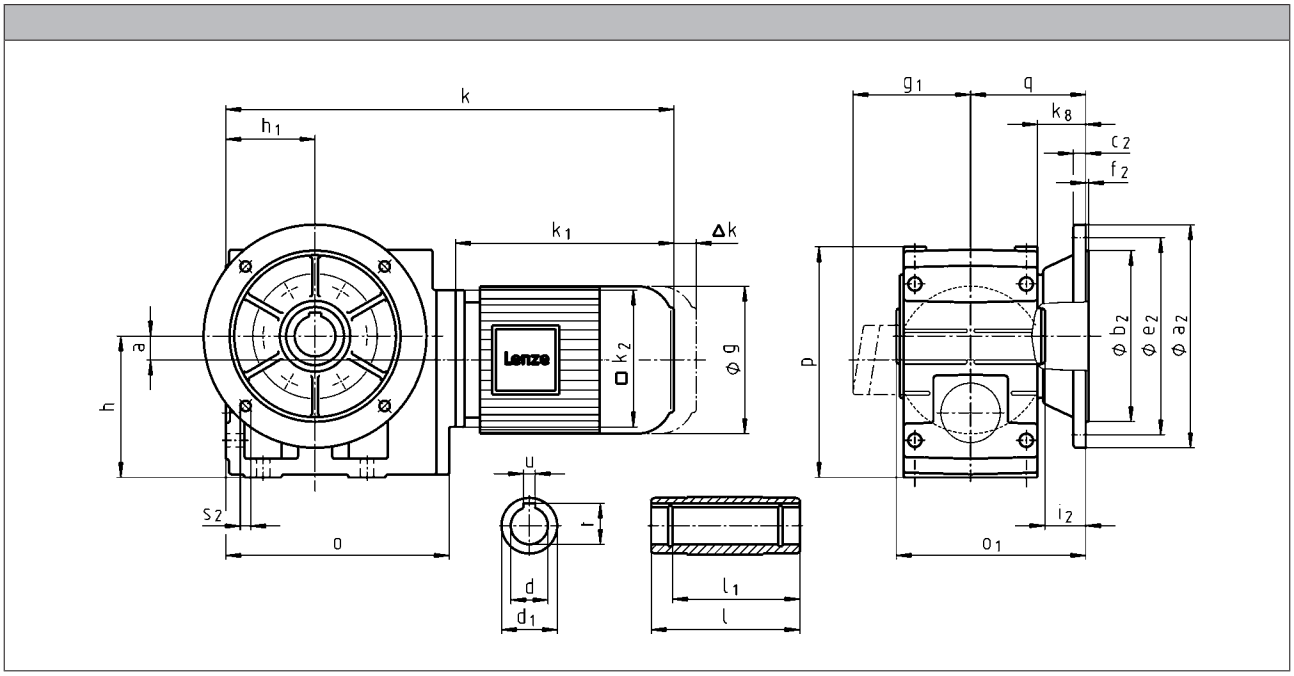



		063C11 063C12 063C31 063C32	063C42	071C11	071C13 071C31 071C32 071C33 071C42	080C13 080C33
g		123		139		156
g_1	MDEMAXX	100		109		150
	MDEMABR	107		118		132
k_1	MDEMAXX	187		207		224.5
k_2		120				145
Δ k	MDEMABR	40		52		73
	MDFMAXX	128				
	MDFMABR	170		165		183
		k				
GSS04		377		397		420
GSS05			399	419		441
GSS06			439		459	481
GSS07						524

	a	h[1]	h_1	k_8	o	p[1]	q
GSS04	20	100	71	41	181	171	91
GSS05	23	125	80	40	212	205	103.5
GSS06	26	150	100	49	255	250	121.5
GSS07	33	190	120	65.5	305	310	155.5

	d	d_1	l	l_1	u	t	i_2	o_1[1]	a_2	b_2	c_2	e_2	f_2	s_2
	H7				JS9	+0,2				j7				
GSS04	25 30	45 45	115 115	100 100	8 8	28.3 33.3	33.5 33.5	148.5 148.5	160	110	10	130	3.5	4 x 9
GSS05	30 35	50 50	140 140	124 124	8 10	33.3 38.3	33 33	173.5 173.5	200	130	12	165	4	4 x 11
GSS06	40 45	65 65	160 160	140 140	12 14	43.3 48.8	42 41	201.5 201.5	200 250	130 180	12 15	165 215	3.5 4	4 x 11 4 x 14
GSS07	50 55	75 75	200 200	175 175	14 16	53.8 59.3	55 55	255.5 255.5	250 300	180 230	15 17	215 265	4 4	4 x 14 4 x 14

[1] k_2 !



Dimensions

GSS□□-2M HAK

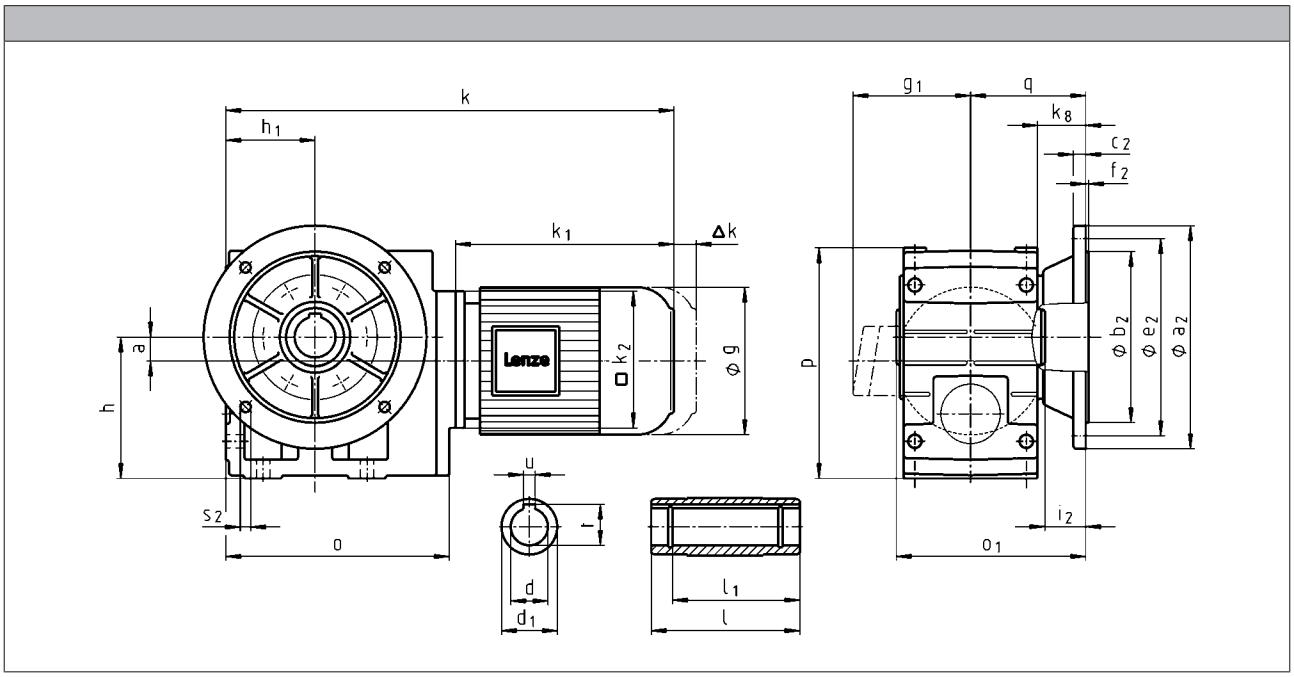

		080C32	090C12	090C32	100C12
g		156	176		194
g_1	MHEMAXX	150	152	157	166
	MHEMABR	132	137		147
k_1	MHEMAXX	224.5	274		309
k_2		145	180		
Δ k	MHEMABR	73	68		76
	MHFMAXX	128			109
	MHFMABR	183	181		170
		k			
GSS04		420	479		
GSS05		441	501		536
GSS06		481	541		576
GSS07		524	584		619

GSS helical-worm gearboxes

Technical data



		100C32	112C22	132C12 132C22	160C22	160C32
g		194	218	258	310	
g_1	MHEMAXX	166	176	195	210	
	MHEMABR	147	158	187	210	
k_1	MHEMAXX	324	363	403	457.5	501.5
k_2		180	222	265	300	
Δ k	MHEMABR	76	90	109.5	105	
	MHFMAXX	109	102	115	149	
	MHFMABR	170	183	201.5	179	
		k				
	GSS05	551				
	GSS06	591	636	684		
	GSS07	634	679	727	786	830

	a	h[1)]	h_1	k_8	o	p[1)]	q
GSS04	20	100	71	41	181	171	91
GSS05	23	125	80	40	212	205	103.5
GSS06	26	150	100	49	255	250	121.5
GSS07	33	190	120	65.5	305	310	155.5

	d	d_1	l	l_1	u	t	i_2	o_1[1)]	a_2	b_2	c_2	e_2	f_2	s_2
	H7				JS9	+0,2				j7				
GSS04	25 30	45 45	115 115	100 100	8 8	28.3 33.3	33.5 33.5	148.5 148.5	160	110	10	130	3.5	4 x 9
GSS05	30 35	50 50	140 140	124 124	8 10	33.3 38.3	33 33	173.5 173.5	200	130	12	165	4	4 x 11
GSS06	40 45	65 65	160 160	140 140	12 14	43.3 48.8	42 41	201.5 201.5	200 250	130 180	12 15	165 215	3.5 4	4 x 11 4 x 14
GSS07	50 55	75 75	200 200	175 175	14 16	53.8 59.3	55 55	255.5 255.5	250 300	180 230	15 17	215 265	4 4	4 x 14 4 x 14

[1)] k_2 !



Dimensions

GSS□□-2M V□R

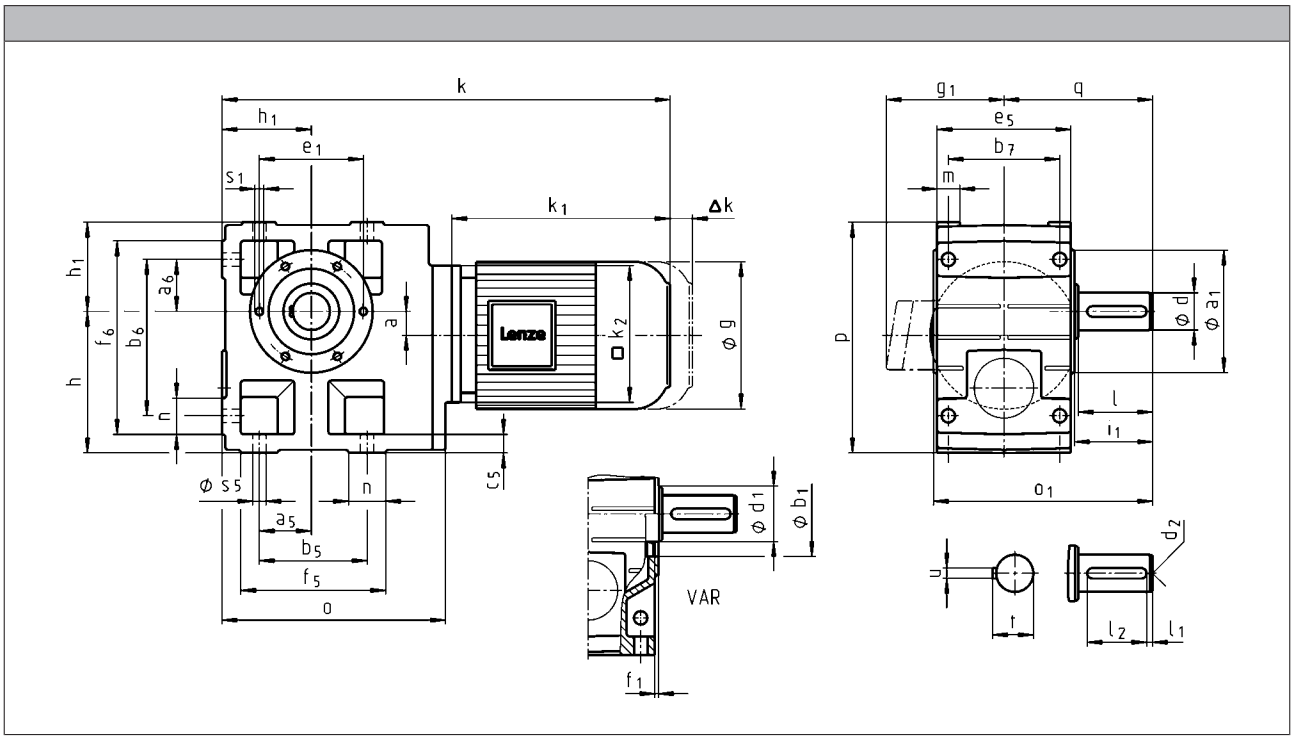



		063C11 063C12 063C31 063C32	063C42	071C11	071C13 071C31 071C32 071C33 071C42	080C13 080C33
g		123		139		156
g_1	MDEMAXX	100		109		150
	MDEMABR	107		118		132
k_1	MDEMAXX	187		207		224.5
k_2		120				145
Δ k	MDEMABR	40		52		73
	MDFMAXX	128				
	MDFMABR	170		165		183
		k				
GSS04		377		397		420
GSS05			399	419		441
GSS06			439		459	481
GSS07						524

	a	h[1)]	h_1	o	p[1)]	q
GSS04	20	100	71	181	171	107.5
GSS05	23	125	80	212	205	130
GSS06	26	150	100	255	250	160
GSS07	33	190	120	305	310	200

	d	d_1	d_2	l	l_1	l_2	u	t	i_1	o_1[1)]	a_1	b_1	e_1	f_1	s_1
	k6											H7			
GSS04	25	45	M10	50	6	40	8	28	52.5	162.5	104	75	90	3	M6x12
GSS05	30	45	M10	60	6	45	8	33	64	196.5	118	80	100	4	M8x15
GSS06	40	65	M16	80	7	63	12	43	85	235.5	140	100	120	4	M10x16
GSS07	50	75	M16	100	8	80	14	53.5	105	295.5	165	115	140	5	M12x18

	a_5	a_6	b_5	b_6	b_7	c_5	e_5	f_5	f_6	m	n	s_5
GSS04	45	45	90	119	85	14	100	112	141	20	22	9
GSS05	47.5	47.5	95	140	105	17	115	124	169	21	29	11
GSS06	60	60	120	170	120	20	145	156	206	23	36	14
GSS07	70	70	140	210	150	25	180	185	255	28	45	18

[1)] k_2 !



Dimensions

GSS□□-2M V□R

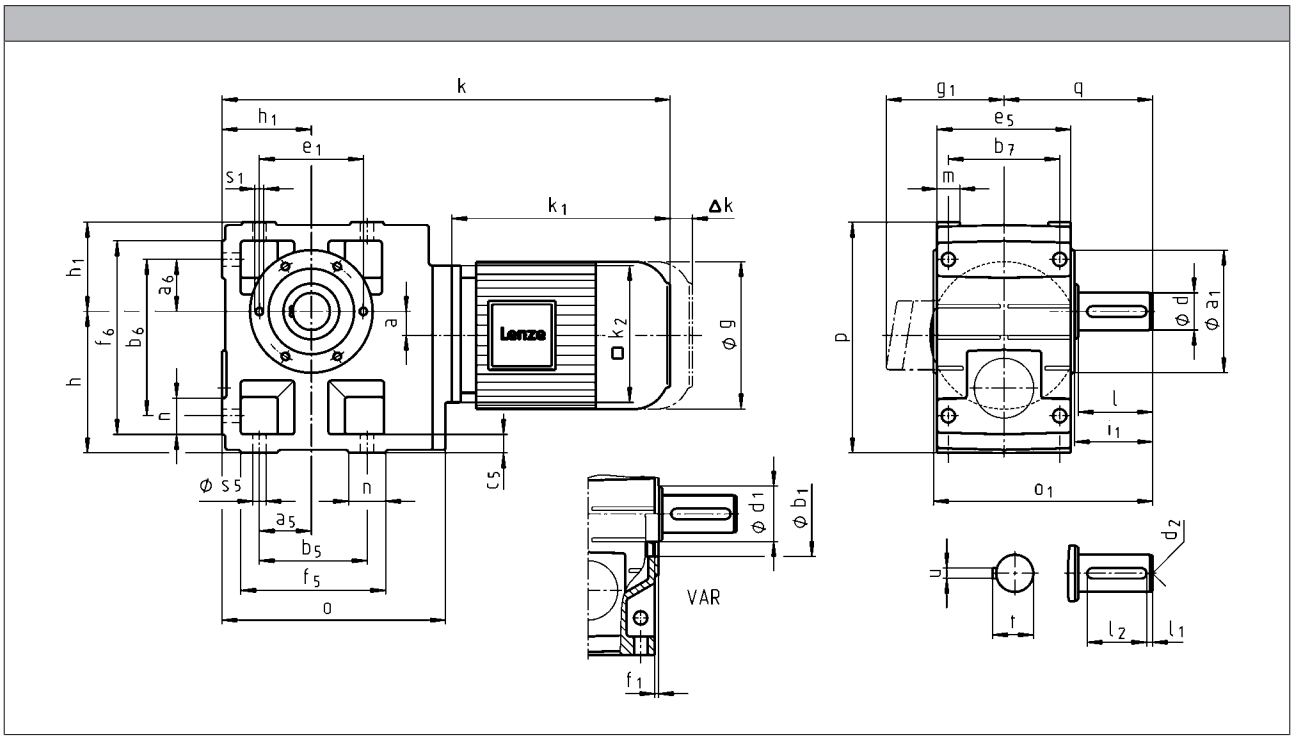

		080C32	090C12	090C32	100C12
g		156	176		194
g_1	MHEMAXX	150	152	157	166
	MHEMABR	132	137		147
k_1	MHEMAXX	224.5	274		309
k_2		145	180		
Δ k	MHEMABR	73	68		76
	MHFMAXX		128		109
	MHFMABR	183	181		170
		k			
	GSS04	420	479		
	GSS05	441	501		536
	GSS06	481	541		576
	GSS07	524	584		619



		100C32	112C22	132C12 132C22	160C22	160C32
g		194	218	258	310	
g_1	MHEMAXX	166	176	195	210	
	MHEMABR	147	158	187	210	
k_1	MHEMAXX	324	363	403	457.5	501.5
k_2		180	222	265	300	
Δ k	MHEMABR	76	90	109.5	105	
	MHFMAXX	109	102	115	149	
	MHFMABR	170	183	201.5	179	
		k				
GSS05		551				
GSS06		591	636	684		
GSS07		634	679	727	786	830

	a	h[1)]	h_1	o	p[1)]	q
GSS04	20	100	71	181	171	107.5
GSS05	23	125	80	212	205	130
GSS06	26	150	100	255	250	160
GSS07	33	190	120	305	310	200

	d	d_1	d_2	l	l_1	l_2	u	t	i_1	o_1[1)]	a_1	b_1	e_1	f_1	s_1
	k6											H7			
GSS04	25	45	M10	50	6	40	8	28	52.5	162.5	104	75	90	3	M6x12
GSS05	30	45	M10	60	6	45	8	33	64	196.5	118	80	100	4	M8x15
GSS06	40	65	M16	80	7	63	12	43	85	235.5	140	100	120	4	M10x16
GSS07	50	75	M16	100	8	80	14	53.5	105	295.5	165	115	140	5	M12x18

	a_5	a_6	b_5	b_6	b_7	c_5	e_5	f_5	f_6	m	n	s_5
GSS04	45	45	90	119	85	14	100	112	141	20	22	9
GSS05	47.5	47.5	95	140	105	17	115	124	169	21	29	11
GSS06	60	60	120	170	120	20	145	156	206	23	36	14
GSS07	70	70	140	210	150	25	180	185	255	28	45	18

[1)] k_2 !



Dimensions

GSS□□-2M VAK

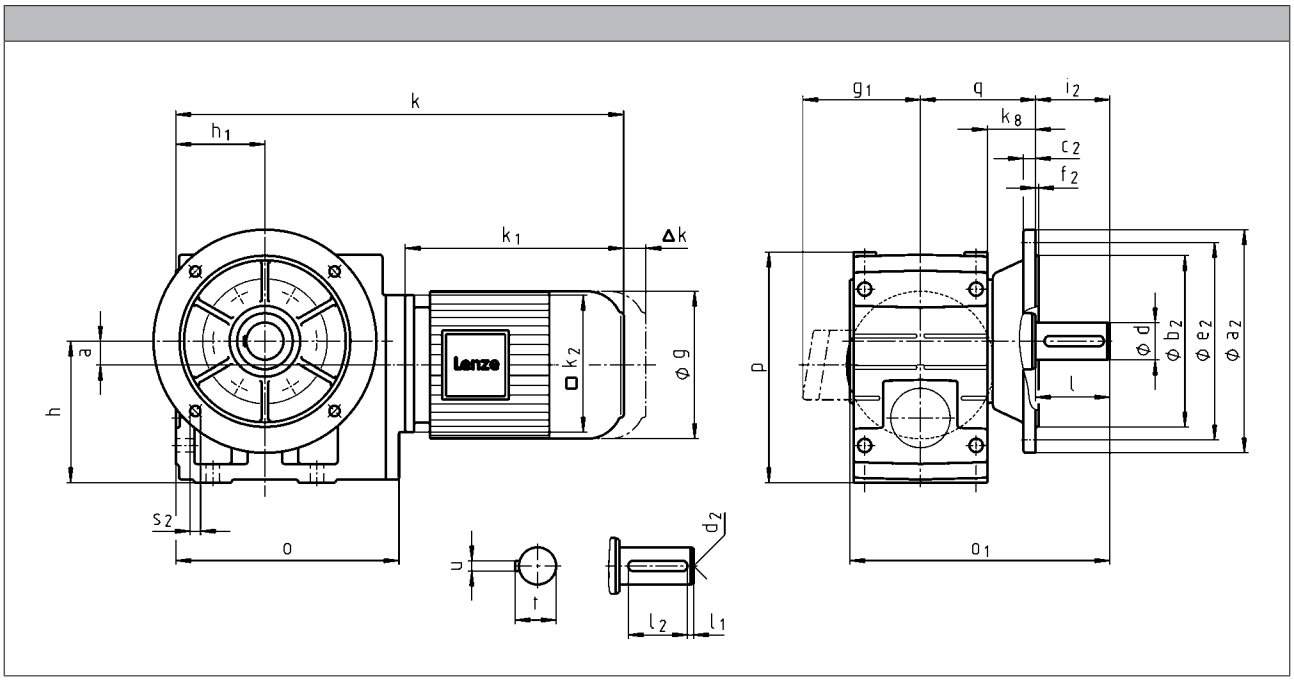



		063C11 063C12 063C31 063C32	063C42	071C11	071C13 071C31 071C32 071C33 071C42	080C13 080C33
g		123		139		156
g_1	MDEMAXX	100		109		150
	MDEMABR	107		118		132
k_1	MDEMAXX	187		207		224.5
k_2		120				145
Δ k	MDEMABR	40		52		73
	MDFMAXX	128				
	MDFMABR	170		165		183
		k				
GSS04		377		397		420
GSS05			399	419		441
GSS06			439		459	481
GSS07						524

	a	h[1)]	h_1	k_8	o	p[1)]	q
GSS04	20	100	71	41	181	171	91
GSS05	23	125	80	40	212	205	103.5
GSS06	26	150	100	49	255	250	121.5
GSS07	33	190	120	65.5	305	310	155.5

	d	d_2	l	l_1	l_2	u	t	i_2	o_1[1)]	a_2	b_2	c_2	e_2	f_2	s_2
	k6										j7				
GSS04	25	M10	50	6	40	8	28	50	195.5	160	110	10	130	3.5	4 x 9
GSS05	30	M10	60	6	45	8	33	60	229.5	200	130	12	165	4	4 x 11
GSS06	40	M16	80	7	63	12	43	80	276.5	250	180	15	215	4	4 x 14
GSS07	50	M16	100	8	80	14	53.5	100	350.5	250 300	180 230	15 17	215 265	4 4	4 x 14 4 x 14

[1)] k_2 !



Dimensions

GSS□□-2M VAK

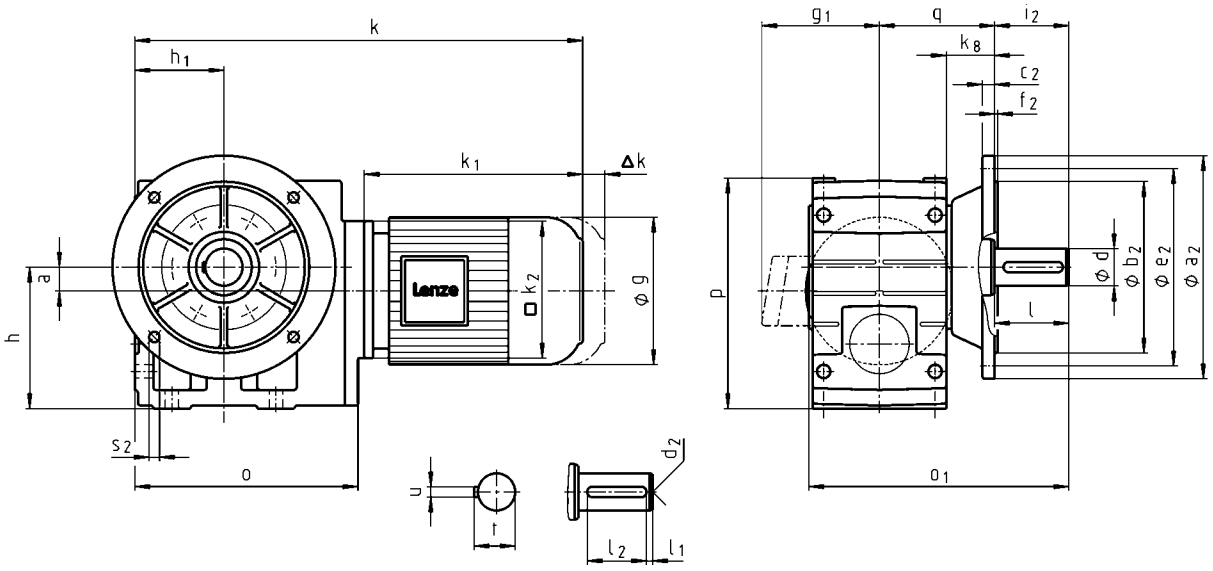

		080C32	090C12	090C32	100C12
g		156	176		194
g_1	MHEMAXX	150	152	157	166
	MHEMABR	132	137		147
k_1	MHEMAXX	224.5	274		309
k_2		145	180		
Δ k	MHEMABR	73	68		76
	MHFMAXX		128		109
	MHFMABR	183	181		170
		k			
GSS04		420	479		
GSS05		441	501		536
GSS06		481	541		576
GSS07		524	584		619

GSS helical-worm gearboxes

Technical data



		100C32	112C22	132C12 132C22	160C22	160C32
g		194	218	258	310	
g_1	MHEMAXX	166	176	195	210	
	MHEMABR	147	158	187	210	
k_1	MHEMAXX	324	363	403	457.5	501.5
k_2		180	222	265	300	
Δ k	MHEMABR	76	90	109.5	105	
	MHFMAXX	109	102	115	149	
	MHFMABR	170	183	201.5	179	
		k				
GSS05		551				
GSS06		591	636	684		
GSS07		634	679	727	786	830

	a	h[1)]	h_1	k_8	o	p[1)]	q
GSS04	20	100	71	41	181	171	91
GSS05	23	125	80	40	212	205	103.5
GSS06	26	150	100	49	255	250	121.5
GSS07	33	190	120	65.5	305	310	155.5

	d	d_2	l	l_1	l_2	u	t	i_2	o_1[1)]	a_2	b_2	c_2	e_2	f_2	s_2
	k6										j7				
GSS04	25	M10	50	6	40	8	28	50	195.5	160	110	10	130	3.5	4 x 9
GSS05	30	M10	60	6	45	8	33	60	229.5	200	130	12	165	4	4 x 11
GSS06	40	M16	80	7	63	12	43	80	276.5	250	180	15	215	4	4 x 14
GSS07	50	M16	100	8	80	14	53.5	100	350.5	250 300	180 230	15 17	215 265	4 4	4 x 14 4 x 14

[1)] k_2 !



Dimensions

GSS□□-3M H□R

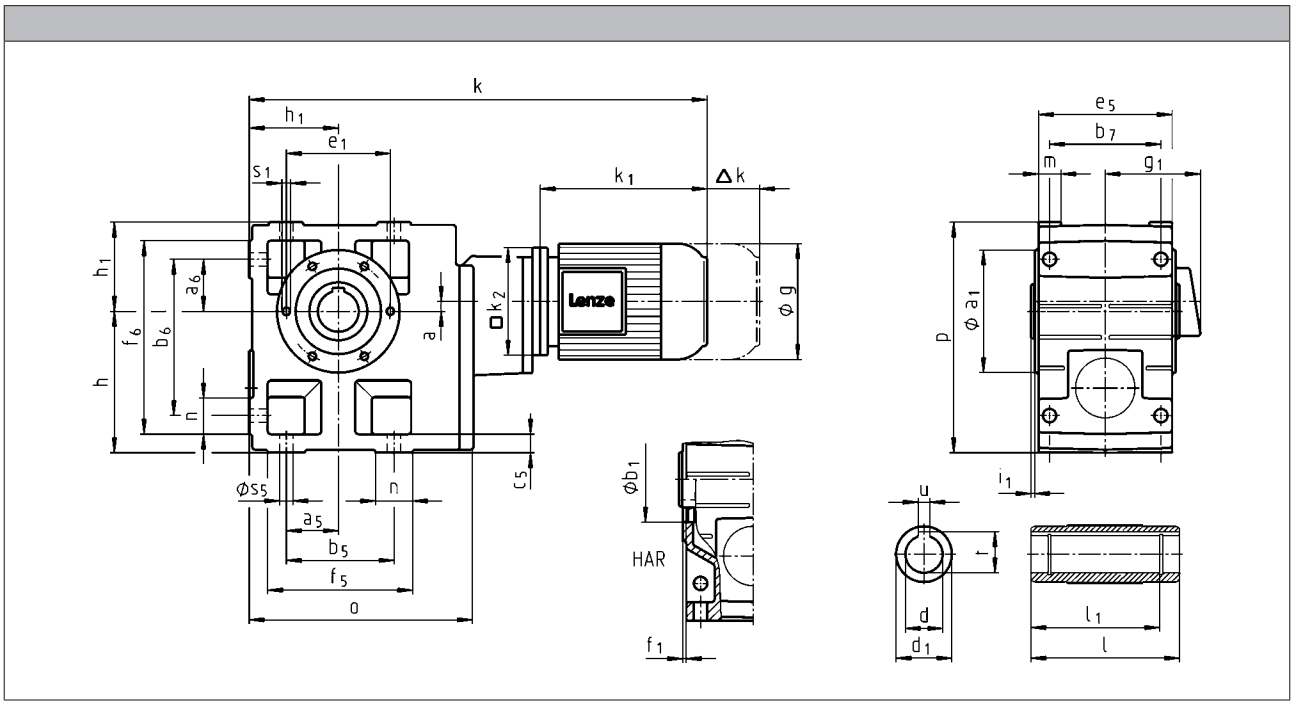



		063C11 063C12 063C31 063C32	063C42	071C11 071C13 071C31 071C32 071C33 071C42	080C13	080C33
g		123		139	156	
g_1	MDEMAXX	100		109	150	
	MDEMABR	107		118	132	
k_1	MDEMAXX	187		207	224.5	
k_2		120			145	
Δ k	MDEMABR	40		52	73	
	MDFMAXX	128				
	MDFMABR	170		165	183	
		k				
GSS05		475		495	518	
GSS06		532		552	575	
GSS07			586	606	629	

	a	h	h_1	o	p
GSS05	13	125	80	209	205
GSS06	10	150	100	252	250
GSS07	12	190	120	299	310

	d	d_1	l	l_1	u	t	i_1	a_1	b_1	e_1	f_1	s_1
	H7				JS9	+0,2			H7			
GSS05	30 35	50 50	140 140	124 124	8 10	33.3 38.3	4 4	118	80	100	4	M8x15
GSS06	40 45	65 65	160 160	140 140	12 14	43.3 48.8	5 5	140	100	120	4	M10x16
GSS07	50 55	75 75	200 200	175 175	14 16	53.8 59.3	5 5	165	115	140	5	M12x18

	a_5	a_6	b_5	b_6	b_7	c_5	e_5	f_5	f_6	m	n	s_5
GSS05	47.5	47.5	95	140	105	17	115	124	169	21	29	11
GSS06	60	60	120	170	120	20	145	156	206	23	36	14
GSS07	70	70	140	210	150	25	180	185	255	28	45	18



Dimensions

GSS□□-3M H□R

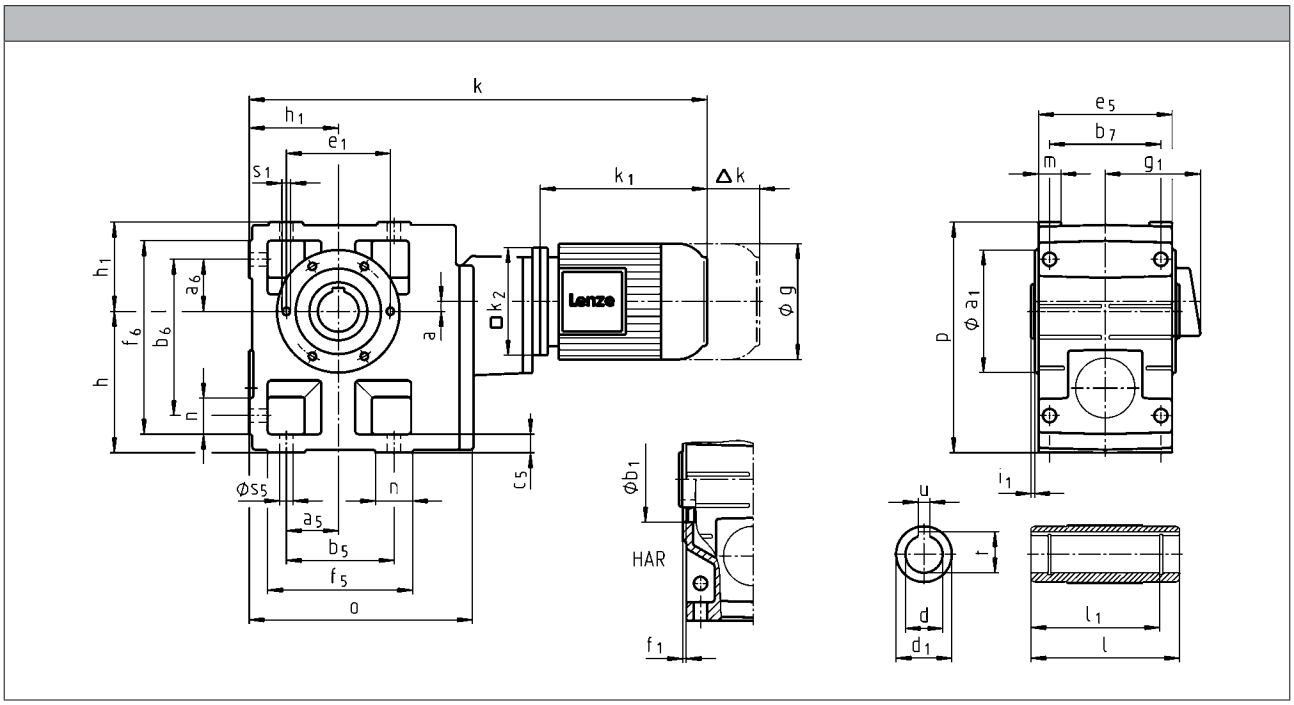

GSS helical-worm gearboxes

Technical data



		080C32	090C12	090C32	100C12
g		156	176		194
g_1	MHEMAXX	150	152	157	166
	MHEMABR	132	137		147
k_1	MHEMAXX	224.5	274		309
k_2		145	180		
Δ k	MHEMABR	73	68		76
	MHFMAXX		128		109
	MHFMABR	183	181		170
		k			
GSS06		575	634		
GSS07		629	688		723

	a	h	h_1	o	p
GSS06	10	150	100	252	250
GSS07	12	190	120	299	310

	d	d_1	l	l_1	u	t	i_1	a_1	b_1	e_1	f_1	s_1
	H7				JS9	+0,2			H7			
GSS06	40 45	65 65	160 160	140 140	12 14	43.3 48.8	5 5	140	100	120	4	M10x16
GSS07	50 55	75 75	200 200	175 175	14 16	53.8 59.3	5 5	165	115	140	5	M12x18

	a_5	a_6	b_5	b_6	b_7	c_5	e_5	f_5	f_6	m	n	s_5
GSS06	60	60	120	170	120	20	145	156	206	23	36	14
GSS07	70	70	140	210	150	25	180	185	255	28	45	18

Dimensions

GSS□□-3M HAK

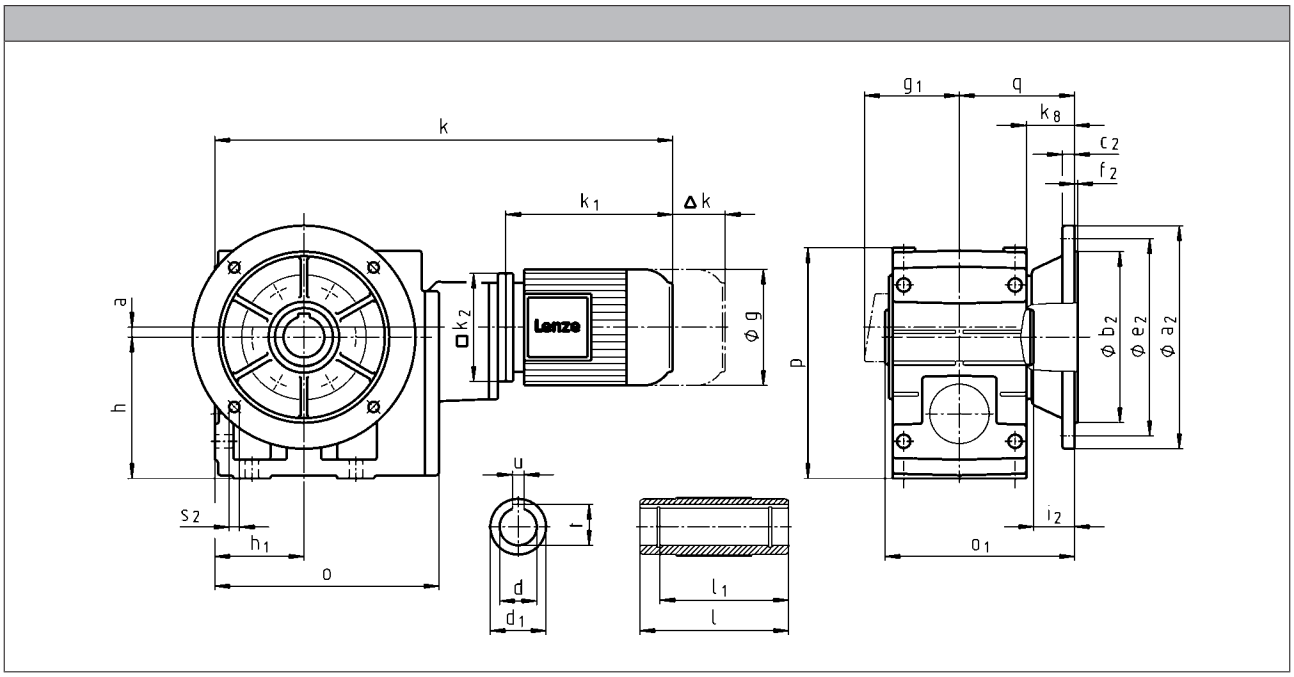



		063C11 063C12 063C31 063C32	063C42	071C11 071C13 071C31 071C32 071C33 071C42	080C13	080C33
g		123		139	156	
g_1	MDEMAXX	100		109	150	
	MDEMABR	107		118	132	
k_1	MDEMAXX	187		207	224.5	
k_2		120			145	
Δ k	MDEMABR	40		52	73	
	MDFMAXX	128				
	MDFMABR	170		165	183	
		k				
GSS05		475		495	518	
GSS06		532		552	575	
GSS07			586	606	629	

	a	h	h_1	k_8	o	p	q
GSS05	13	125	80	40	209	205	103.5
GSS06	10	150	100	49	252	250	121.5
GSS07	12	190	120	65.5	299	310	155.5

	d	d_1	l	l_1	u	t	i_2	o_1	a_2	b_2	c_2	e_2	f_2	s_2
	H7				JS9	+0,2				j7				
GSS05	30 35	50 50	140 140	124 124	8 10	33.3 38.3	33 33	173.5 173.5	200	130	12	165	4	4 x 11
GSS06	40 45	65 65	160 160	140 140	12 14	43.3 48.8	42 41	201.5 201.5	200 250	130 180	12 15	165 215	3.5 4	4 x 11 4 x 14
GSS07	50 55	75 75	200 200	175 175	14 16	53.8 59.3	55 55	255.5 255.5	250 300	180 230	15 17	215 265	4 4	4 x 14 4 x 14

Dimensions

GSS□□-3M HAK

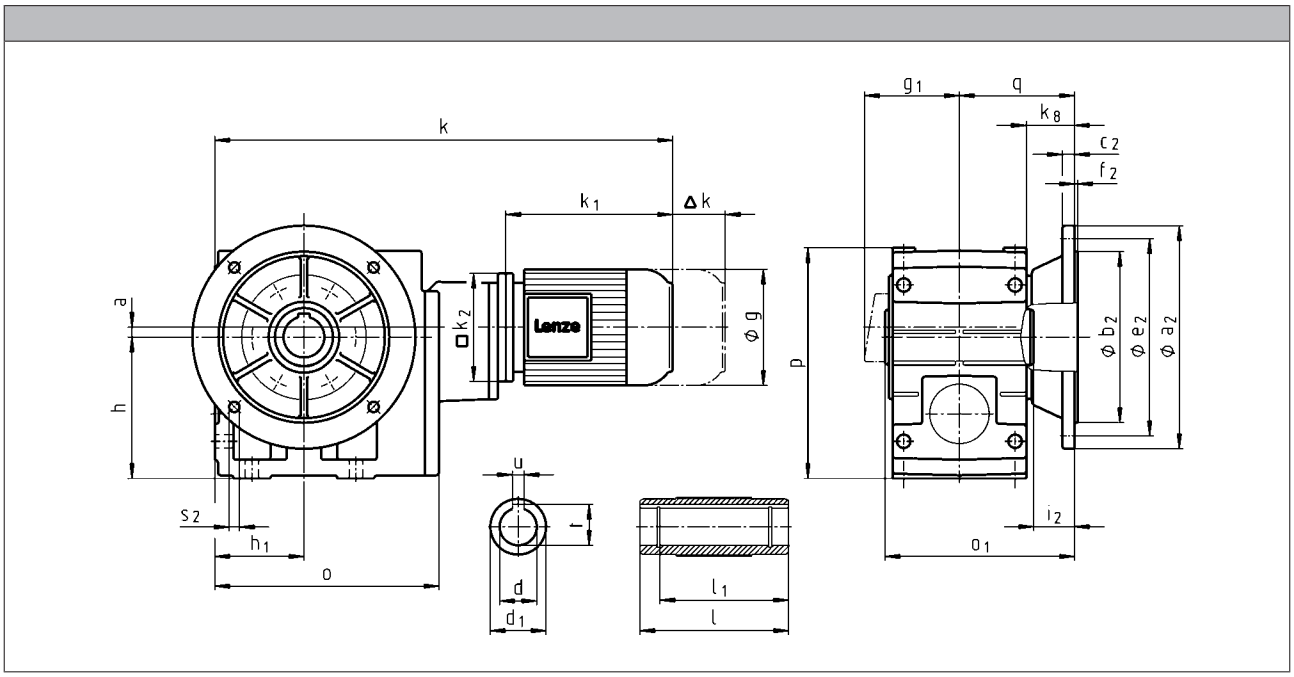

GSS helical-worm gearboxes

Technical data



		080C32	090C12	090C32	100C12
g		156	176		194
g_1	MHEMAXX	150	152	157	166
	MHEMABR	132	137		147
k_1	MHEMAXX	224.5	274		309
k_2		145	180		
Δ k	MHEMABR	73	68		76
	MHFMAXX		128		109
	MHFMABR	183	181		170
		k			
GSS06		575	634		
GSS07		629	688		723

	a	h	h_1	k_8	o	p	q
GSS06	10	150	100	49	252	250	121.5
GSS07	12	190	120	65.5	299	310	155.5

	d	d_1	l	l_1	u	t	i_2	o_1	a_2	b_2	c_2	e_2	f_2	s_2
	H7				JS9	+0,2				j7				
GSS06	40 45	65 65	160 160	140 140	12 14	43.3 48.8	42 41	201.5 201.5	200 250	130 180	12 15	165 215	3.5 4	4 x 11 4 x 14
GSS07	50 55	75 75	200 200	175 175	14 16	53.8 59.3	55 55	255.5 255.5	250 300	180 230	15 17	215 265	4 4	4 x 14 4 x 14



Dimensions

GSS□□-3M V□R

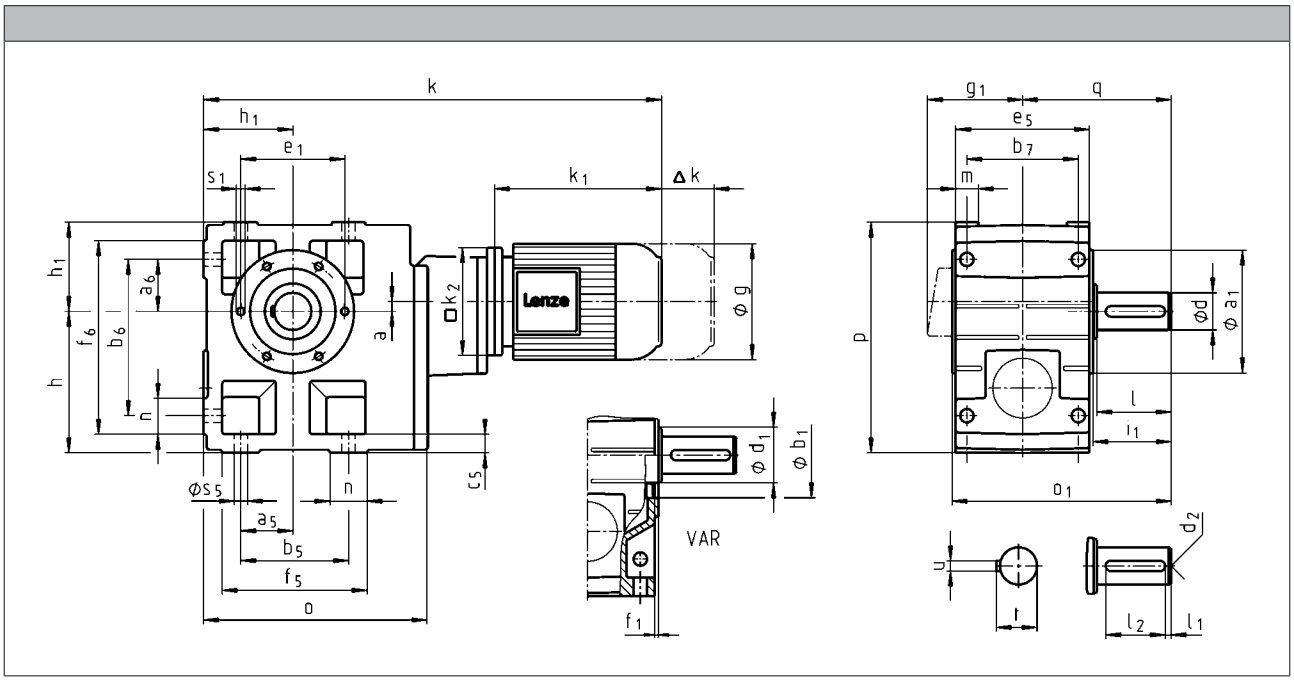



		063C11 063C12 063C31 063C32	063C42	071C11 071C13 071C31 071C32 071C33 071C42	080C13	080C33
g		123		139	156	
g_1	MDEMAXX	100		109	150	
	MDEMABR	107		118	132	
k_1	MDEMAXX	187		207	224.5	
k_2		120			145	
Δ k	MDEMABR	40		52	73	
	MDFMAXX	128				
	MDFMABR	170		165	183	
		k				
GSS05		475		495	518	
GSS06		532		552	575	
GSS07			586	606	629	

	a	h	h_1	o	p	q
GSS05	13	125	80	209	205	130
GSS06	10	150	100	252	250	160
GSS07	12	190	120	299	310	200

	d	d_1	d_2	l	l_1	l_2	u	t	i_1	o_1	a_1	b_1	e_1	f_1	s_1
	k6											H7			
GSS05	30	45	M10	60	6	45	8	33	64	196.5	118	80	100	4	M8x15
GSS06	40	65	M16	80	7	63	12	43	85	235.5	140	100	120	4	M10x16
GSS07	50	75	M16	100	8	80	14	53.5	105	295.5	165	115	140	5	M12x18

	a_5	a_6	b_5	b_6	b_7	c_5	e_5	f_5	f_6	m	n	s_5
GSS05	47.5	47.5	95	140	105	17	115	124	169	21	29	11
GSS06	60	60	120	170	120	20	145	156	206	23	36	14
GSS07	70	70	140	210	150	25	180	185	255	28	45	18



Dimensions

GSS□□-3M V□R

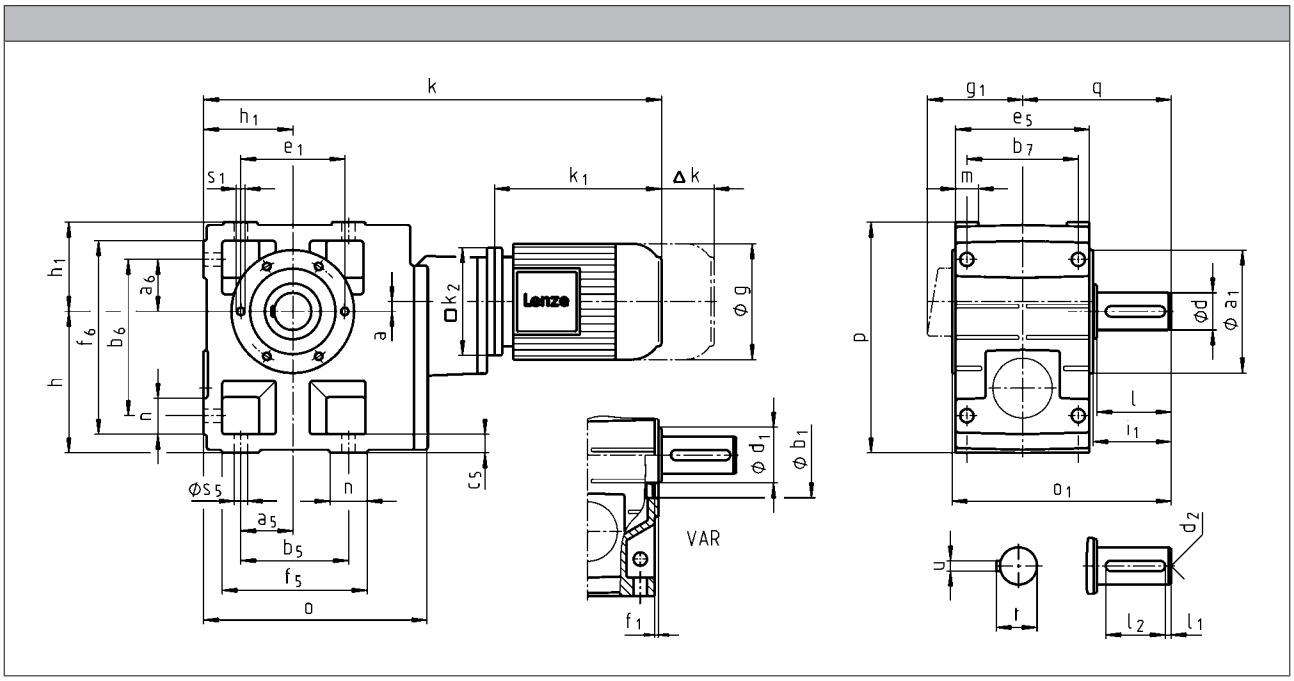

GSS helical-worm gearboxes

Technical data



		080C32	090C12	090C32	100C12
g		156	176		194
g_1	MHEMAXX	150	152	157	166
	MHEMABR	132	137		147
k_1	MHEMAXX	224.5	274		309
k_2		145	180		
Δ k	MHEMABR	73	68		76
	MHFMAXX		128		109
	MHFMABR	183	181		170
		k			
GSS06		575	634		
GSS07		629	688		723

	a	h	h_1	o	p	q
GSS06	10	150	100	252	250	160
GSS07	12	190	120	299	310	200

	d	d_1	d_2	l	l_1	l_2	u	t	i_1	o_1	a_1	b_1	e_1	f_1	s_1
	k6											H7			
GSS06	40	65	M16	80	7	63	12	43	85	235.5	140	100	120	4	M10x16
GSS07	50	75	M16	100	8	80	14	53.5	105	295.5	165	115	140	5	M12x18

	a_5	a_6	b_5	b_6	b_7	c_5	e_5	f_5	f_6	m	n	s_5
GSS06	60	60	120	170	120	20	145	156	206	23	36	14
GSS07	70	70	140	210	150	25	180	185	255	28	45	18



Dimensions

GSS□□-3M VAK

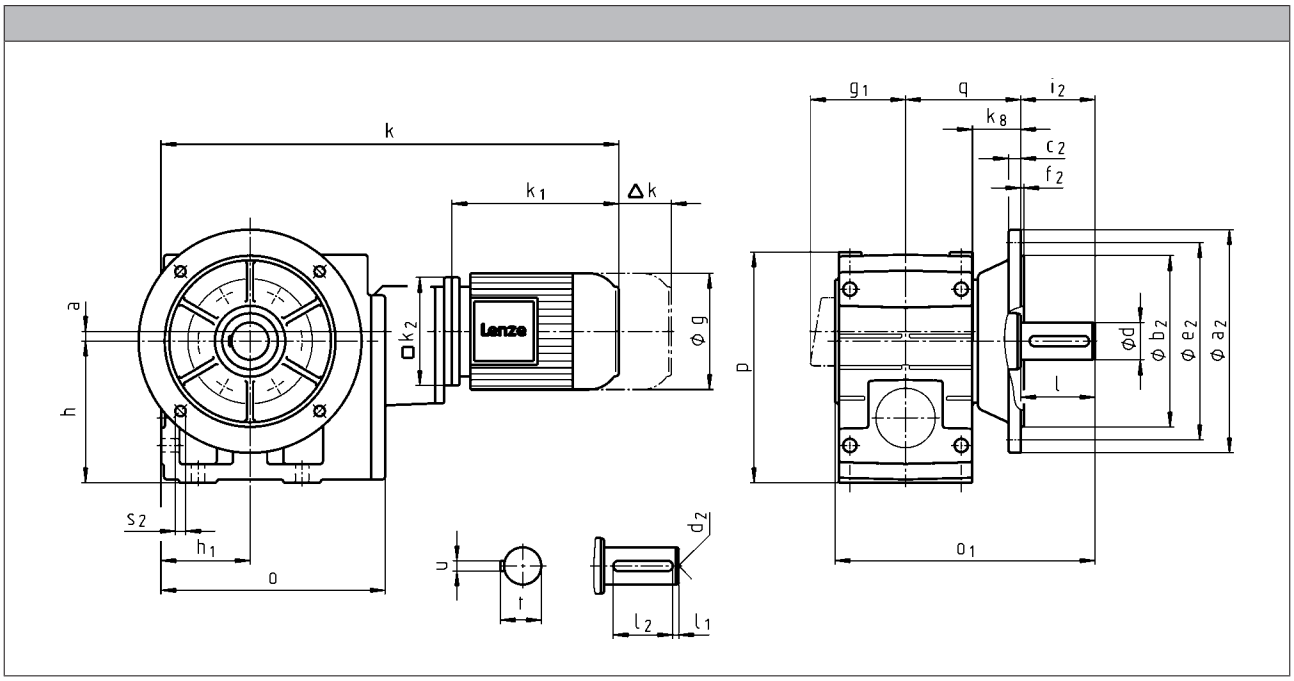



		063C11 063C12 063C31 063C32	063C42	071C11 071C13 071C31 071C32 071C33 071C42	080C13	080C33
g		123		139	156	
g_1	MDEMAXX	100		109	150	
	MDEMABR	107		118	132	
k_1	MDEMAXX	187		207	224.5	
k_2		120			145	
Δ k	MDEMABR	40		52	73	
	MDFMAXX	128				
	MDFMABR	170		165	183	
		k				
GSS05		475		495	518	
GSS06		532		552	575	
GSS07			586	606	629	

	a	h	h_1	k_8	o	p	q
GSS05	13	125	80	40	209	205	103.5
GSS06	10	150	100	49	252	250	121.5
GSS07	12	190	120	65.5	299	310	155.5

	d	d_2	l	l_1	l_2	u	t	i_2	o_1	a_2	b_2	c_2	e_2	f_2	s_2
	k6										j7				
GSS05	30	M10	60	6	45	8	33	60	229.5	200	130	12	165	4	4 x 11
GSS06	40	M16	80	7	63	12	43	80	276.5	250	180	15	215	4	4 x 14
GSS07	50	M16	100	8	80	14	53.5	100	350.5	250 300	180 230	15 17	215 265	4 4	4 x 14 4 x 14

Dimensions

GSS□□-3M VAK

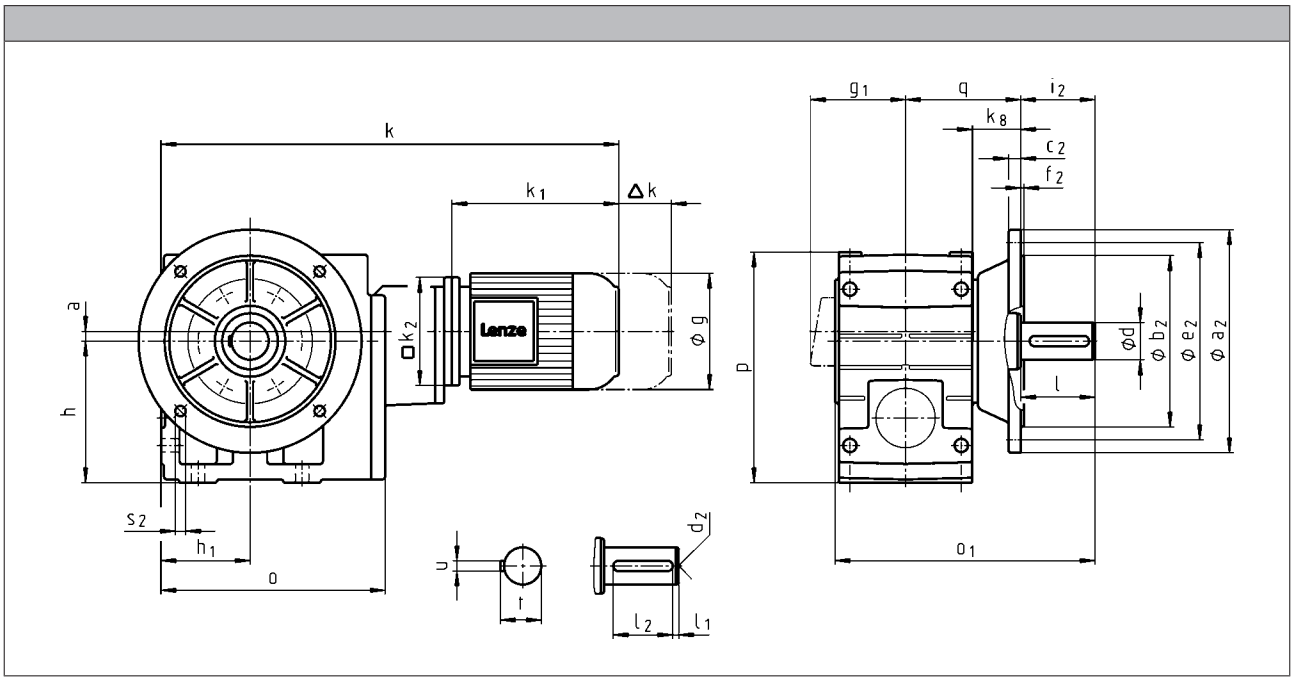

GSS helical-worm gearboxes

Technical data



		080C32	090C12	090C32	100C12
g		156	176		194
g_1	MHEMAXX	150	152	157	166
	MHEMABR	132	137		147
k_1	MHEMAXX	224.5	274		309
k_2		145	180		
Δ k	MHEMABR	73	68		76
	MHFMAXX		128		109
	MHFMABR	183	181		170
		k			
GSS06		575	634		
GSS07		629	688		723

	a	h	h_1	k_8	o	p	q
GSS06	10	150	100	49	252	250	121.5
GSS07	12	190	120	65.5	299	310	155.5

	d	d_2	l	l_1	l_2	u	t	i_2	o_1	a_2	b_2	c_2	e_2	f_2	s_2
	k6										j7				
GSS06	40	M16	80	7	63	12	43	80	276.5	250	180	15	215	4	4 x 14
GSS07	50	M16	100	8	80	14	53.5	100	350.5	250 300	180 230	15 17	215 265	4 4	4 x 14 4 x 14





Hollow shaft with shrink disc

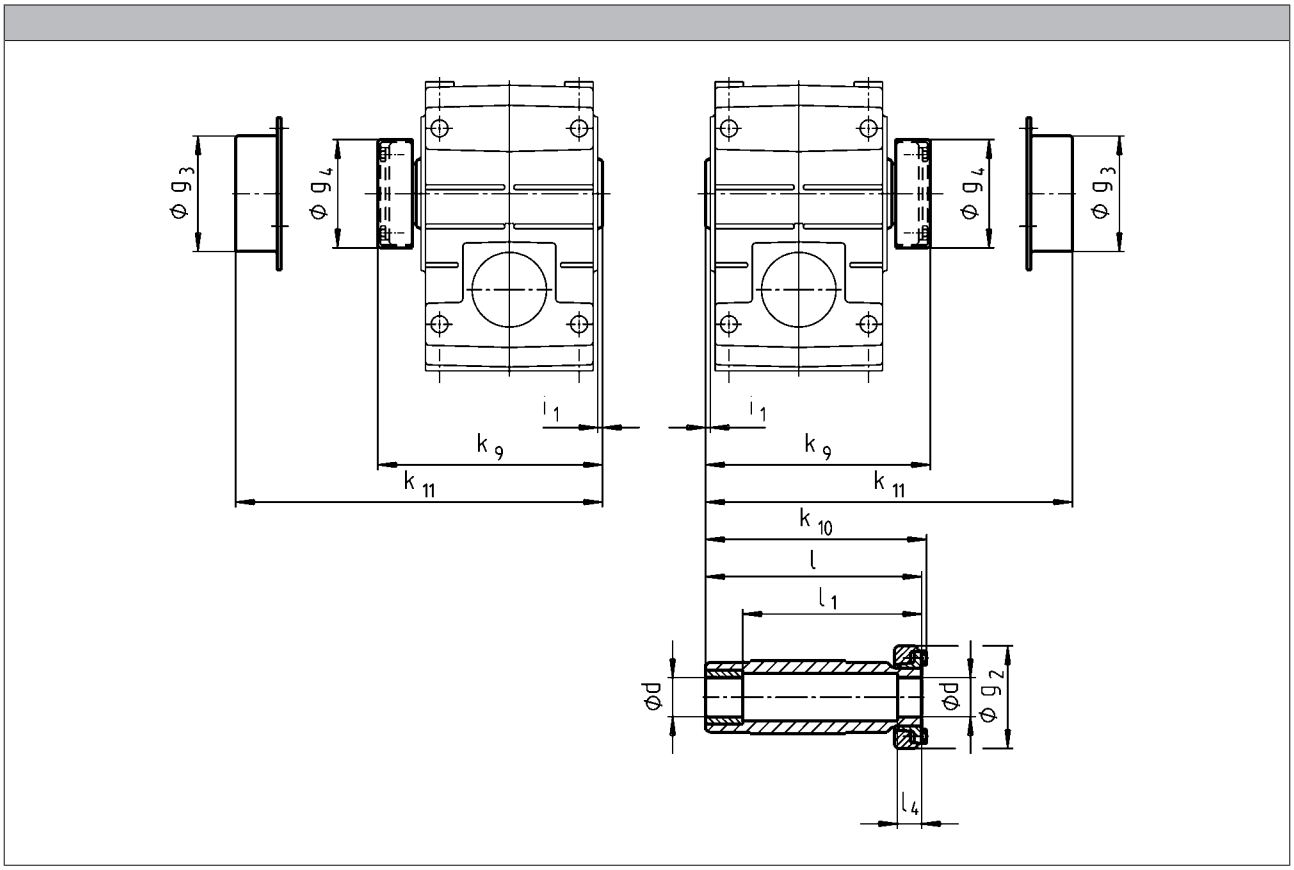

	d	g_2	g_3	g_4	i_1	k_9	k_{10}	k_{11}	l	l_1	l_4
	h6										
GSS04	25 30	72	79	76	2.5	150	148	154	142	122	26
GSS05	35	80	90	84	4.0	176	174	179	168	148	28
GSS06	40	90	100	94	5.0	202	200	204	194	164	30
GSS07	50	110	124	116		241	238	244	232	192	26

- ► Output flange and hollow shaft with shrink disc (output version SAK) are not possible in the same location. For additional dimensions see output version H□□.
- ► Ensure that the strength of the machine shaft material is adequate in shrink disc designs.
  When using typical steels, e.g. C45, 42CrMo4, the torques listed in the selection tables can be used without restriction.
  Please consult us if you wish to use material that is considerably weaker. Medium surface roughness Rz must not exceed 15 µm (turning is sufficient).



Mounting set for hollow shaft circlip:
Proposed design for auxiliary tools

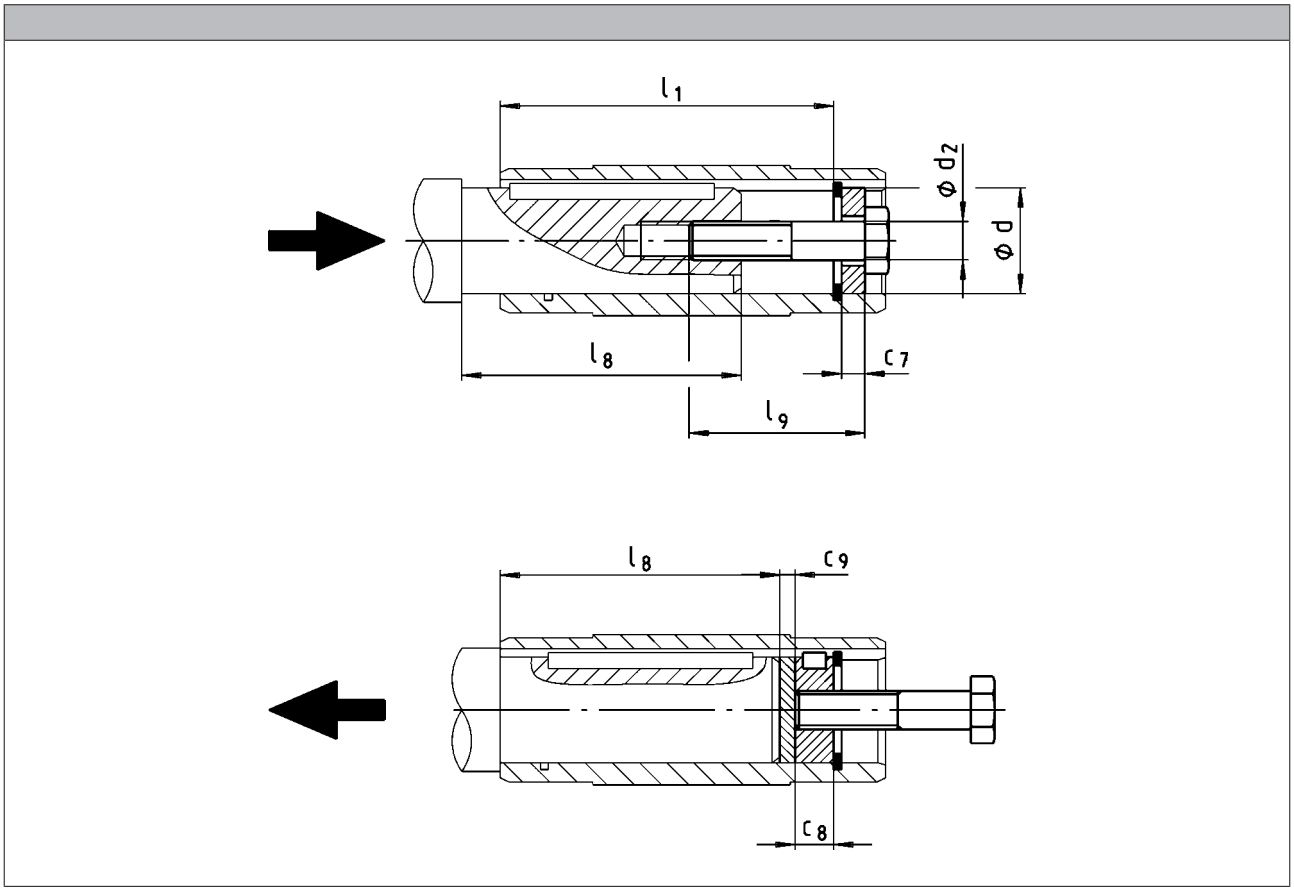

	d	l_1	d_2	l_9	c_7	c_8	c_9	$l_{8,\,max}$
	H7							
GSS04	25 30	100	M10	40	5	10	3	85
					6			
GSS05	30 35	124						107
			M12	50	7	12		
GSS06	40 45	140	M16	60	8	16	4	118
					9			
GSS07	50 55	175			10		5	148
			M20	80	11	20		



Hoseproof hollow shaft cover

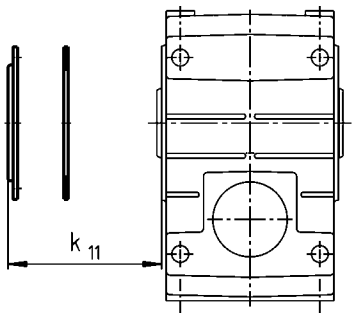

► Cover including gasket

	k_{11}
	[mm]
GSS04	9
GSS05	10
GSS06	11
GSS07	

Gearboxes with 2nd output shaft end

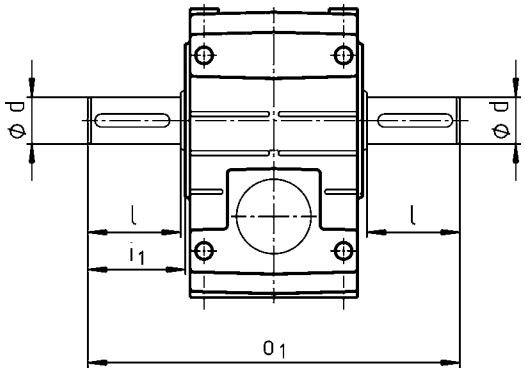

	d	l	i_1	o_1
	k6			
GSS04	25	50	52.5	215
GSS05	30	60	64.0	260
GSS06	40	80	85.0	320
GSS07	50	100	105.0	400



Torque plate on threaded pitch circle

In position 3

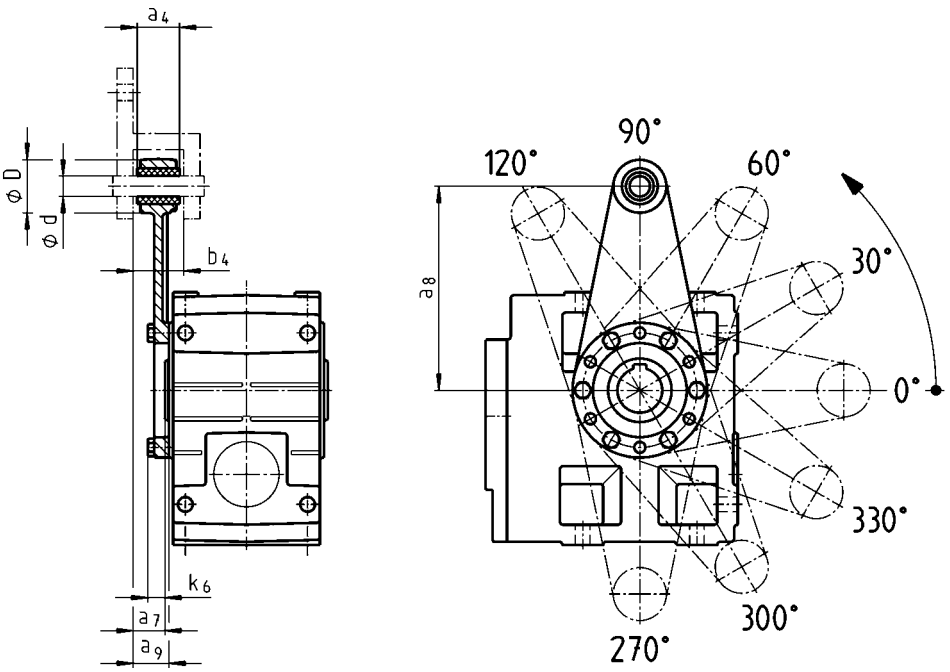

In position 5

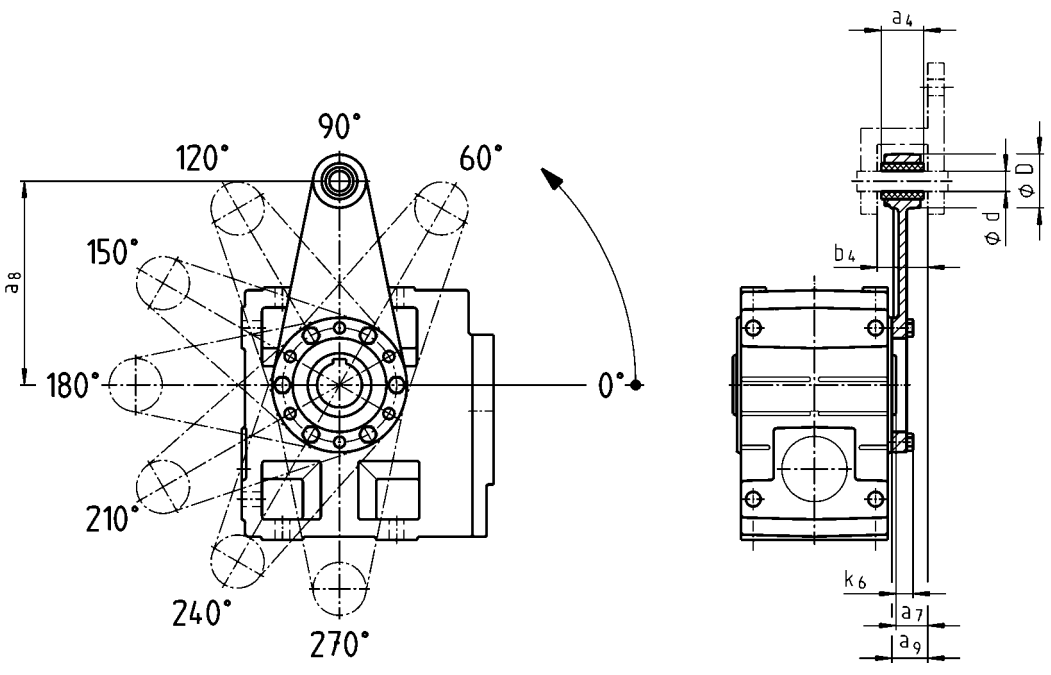

	a_4	a_7	a_8	a_9	b_4	d	D	k_6
GSS04	30	24.0	130	26.5	34.5	12	35	16
GSS05	34	23.5	160	27.5	38.5	16	45	15
GSS06	40	28.0	200	33.0	44.5	20	50	18
GSS07	46	32.5	250	37.5	50.5	25	65	21



Torque plate at housing foot

In position 2, 4 or 6

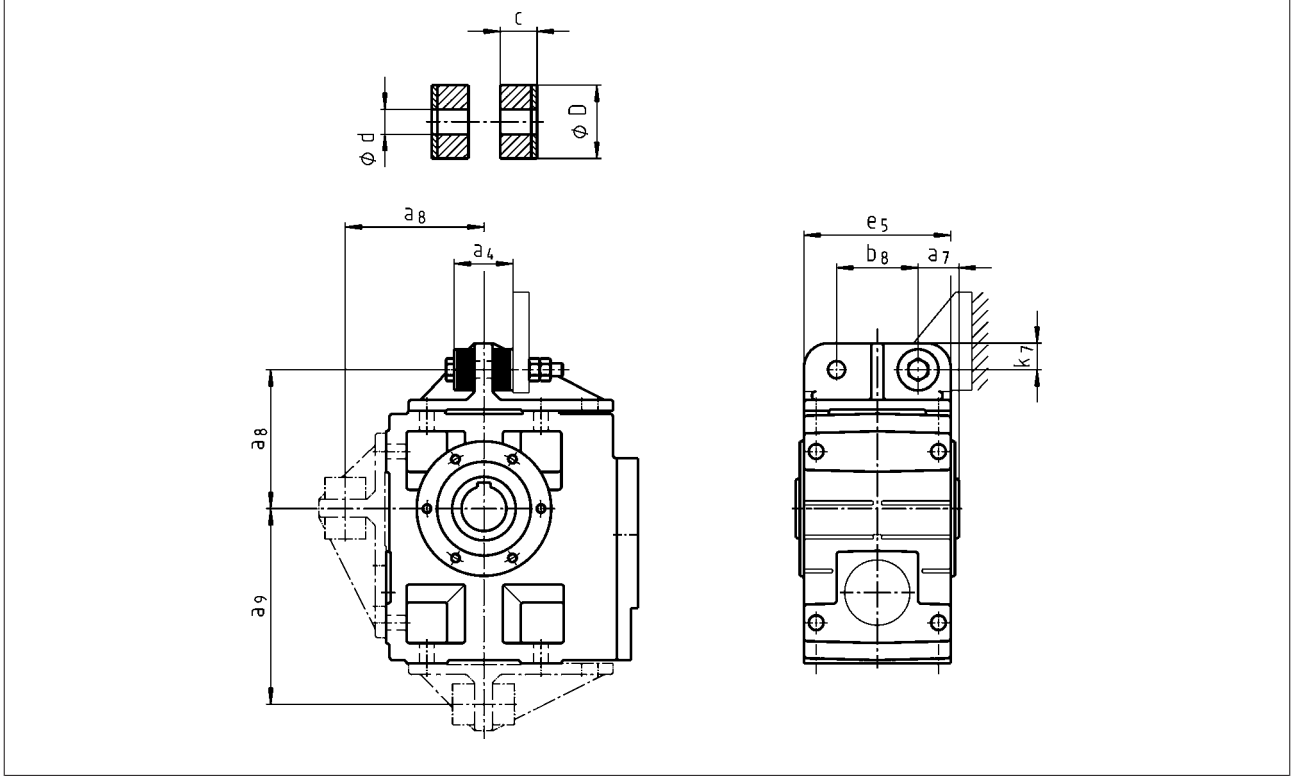

	a_4	a_7	a_8	a_9	b_8	c	d	D	e_5	k_7
GSS04	41	27.5	106	135.0	60	14.5	11	30	100	20
GSS05	45	35.0	115	160.0	70	15.0	13	40	127	25
GSS06	72	40.0	145	195.0	80	27.0	17	50	145	28
GSS07	78	50.0	170	240.0	100	28.0	21	60	180	35

Ventilations

Position of ventilation, sealing elements and oil level check

GSS05...07-2

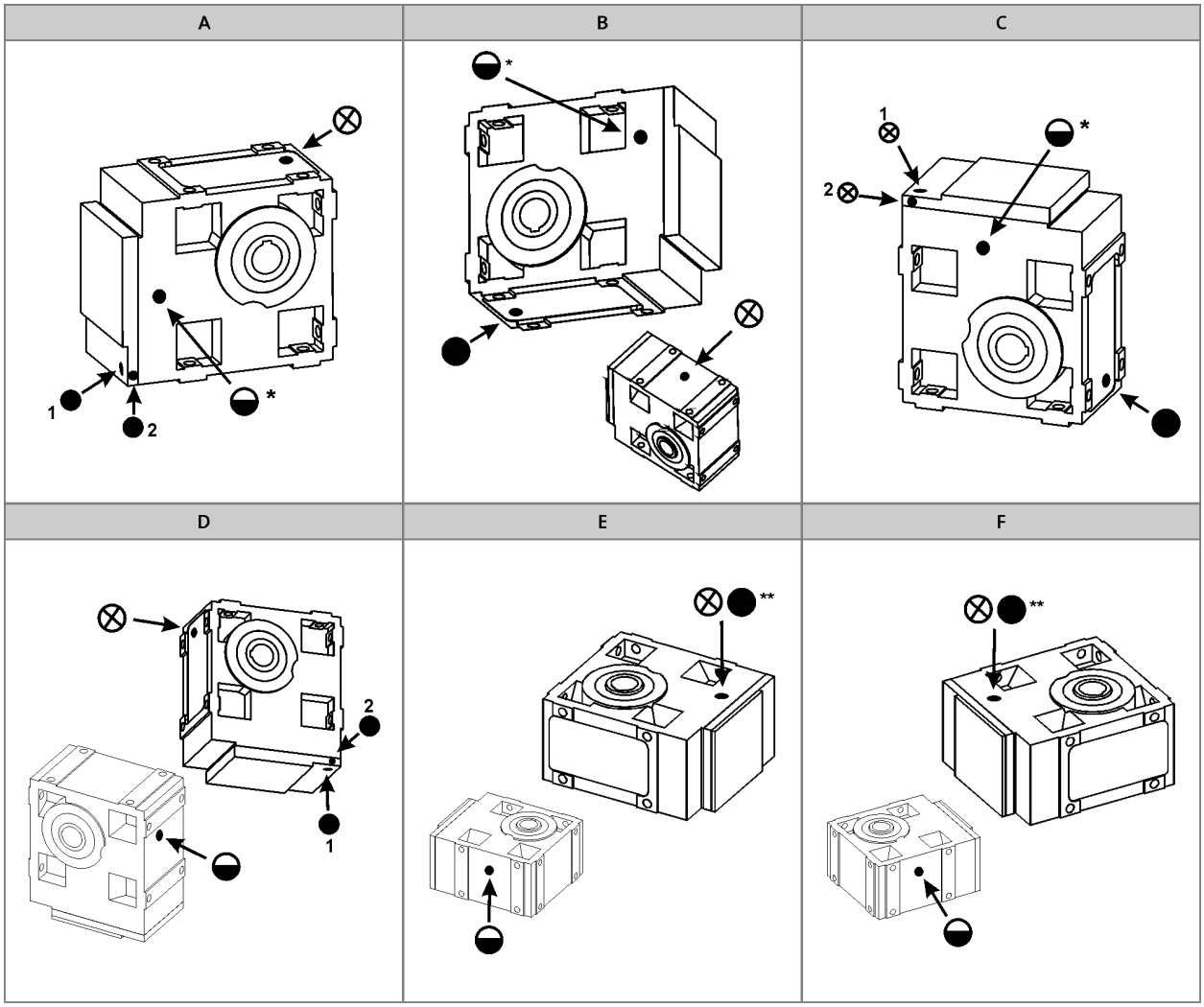

A ... F Mounting position
⊗ Ventilation / Oil filler plug
● Oil drain plug
◒ Oil control plug
* On both sides
** On opposite side

Item 1 standard
Item 2 only with:
- GSS05-2M □□□ 090C□□
- GSS05-2M □□□ 100C□□
- GSS06-2M □□□ 112C□□
- GSS07-2M □□□ 160C□□



Ventilations

Position of ventilation, sealing elements and oil level check

GSS05...07-3

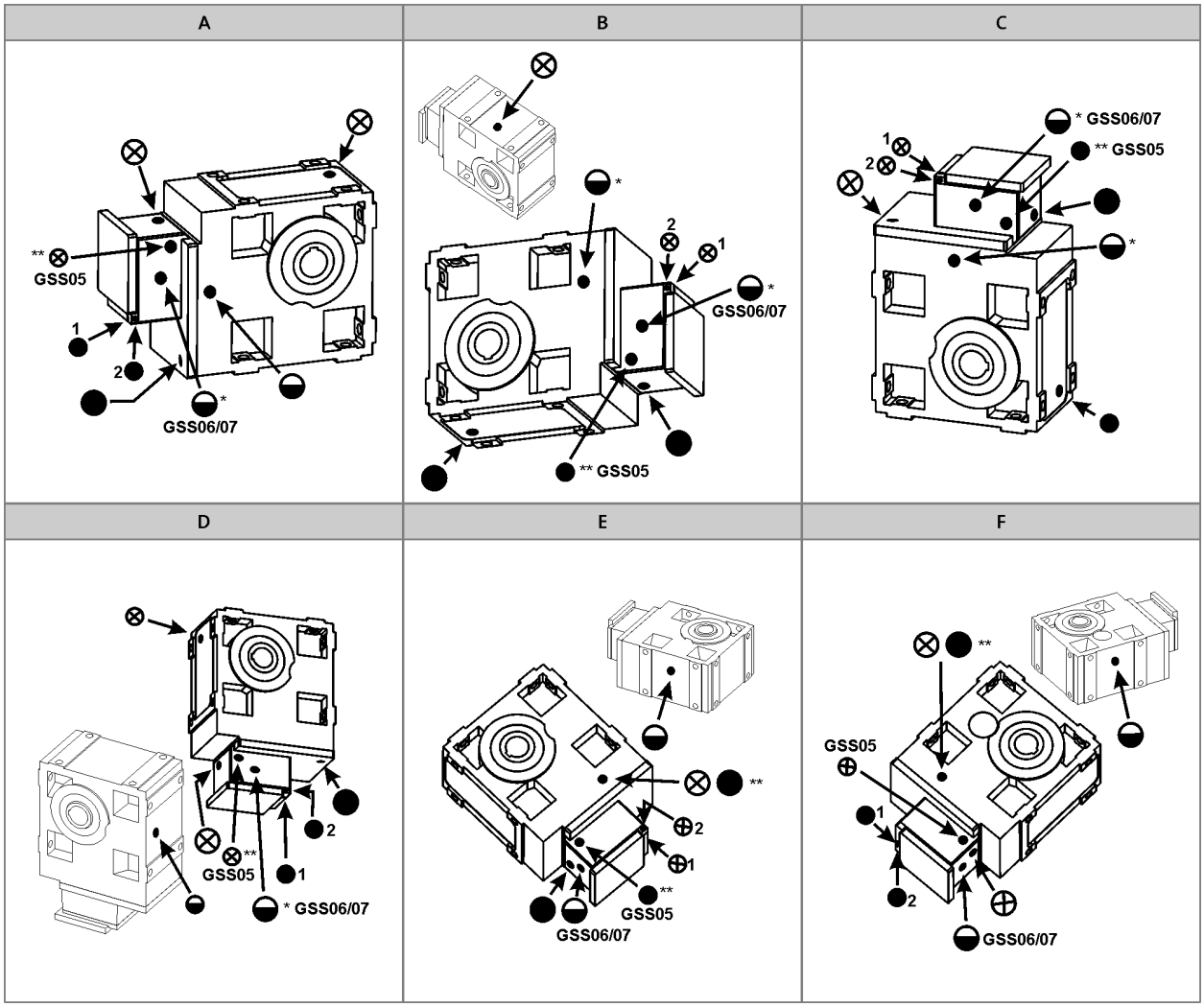

A ... F Mounting position
⊗ Ventilation / Oil filler plug
● Oil drain plug
◒ Oil control plug
* On both sides
** On opposite side

Item 1 standard
Item 2 only on:
- GSS07-3M □□□ 090C□□
- GSS07-3M □□□ 100C□□







MD/MH three-phase AC motors

0.06 to 0.55 kW
0.75 to 45 kW (IE2)

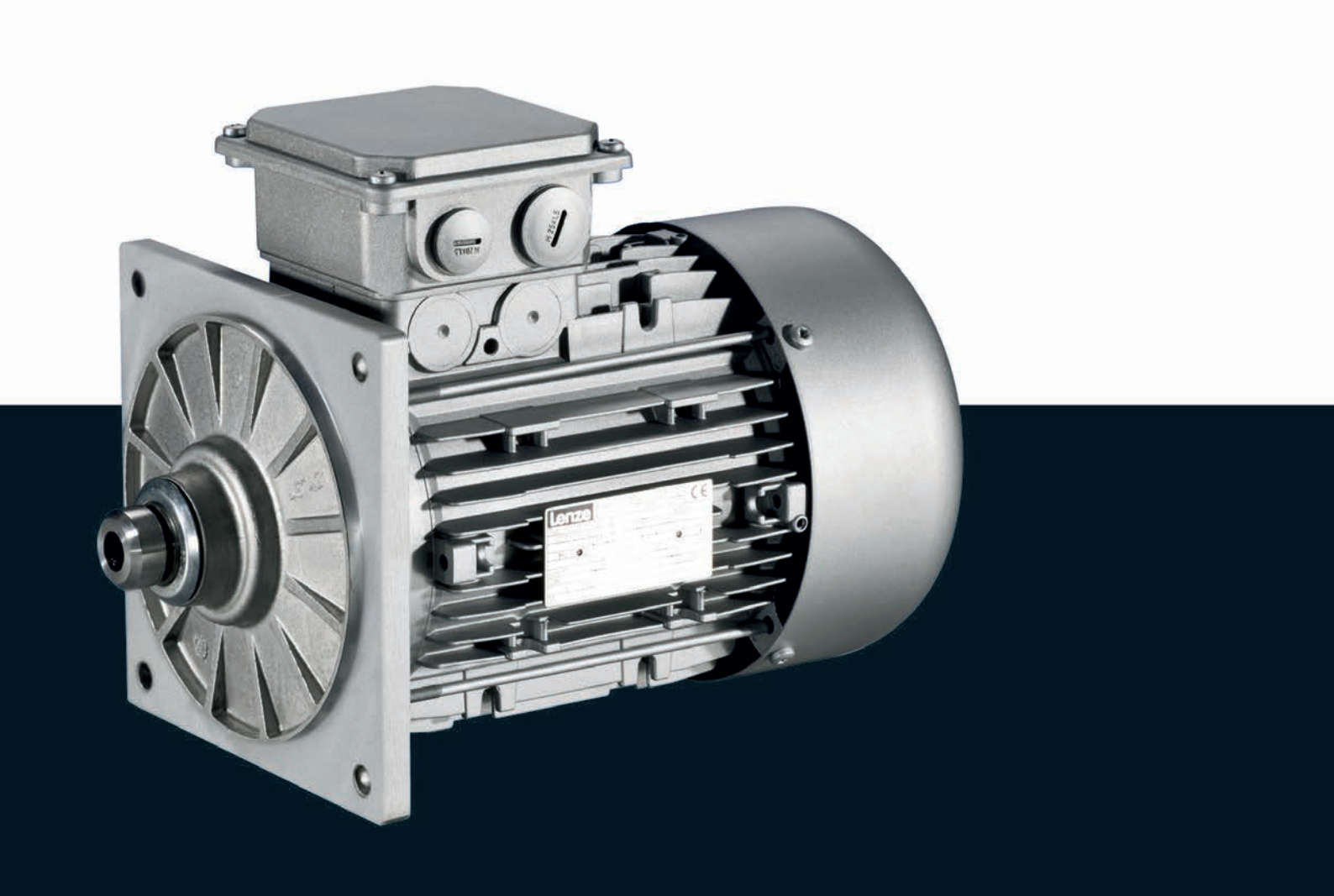

MD/MH three-phase AC motors

Contents

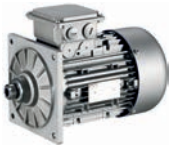

General information	List of abbreviations	6.11 - 4
	Product key	6.11 - 5
	Product information	6.11 - 6
	Functions and features	6.11 - 7
	Motor – inverter assignment	6.11 - 12
	Dimensioning	6.11 - 14
Technical data	Standards and operating conditions	6.11 - 15
	Rated data for 50 Hz	6.11 - 16
	Rated data for 60 Hz	6.11 - 19
	Rated data for 87 Hz	6.11 - 22
	Dimensions, self-ventilated (2-pole)	6.11 - 23
	Dimensions, self-ventilated (4-pole)	6.11 - 24
	Dimensions, self-ventilated (6-pole)	6.11 - 26
	Dimensions, forced ventilated (2-pole)	6.11 - 27
	Dimensions, forced ventilated (4-pole)	6.11 - 28
	Dimensions, forced ventilated (6-pole)	6.11 - 30
	Dimensions, 8400 motec inverter	6.11 - 31
Accessories	Spring-applied brake	6.11 - 33
	Resolver	6.11 - 47
	Incremental encoder and SinCos absolute value encoder	6.11 - 48
	Blowers	6.11 - 49
	Temperature monitoring	6.11 - 51
	Terminal box	6.11 - 53
	Plug connectors	6.11 - 60
	ICN connector	6.11 - 60
	M12 connector	6.11 - 71
	HAN connector	6.11 - 72
	Handwheel	6.11 - 78
	Centrifugal mass	6.11 - 80
	2nd shaft end	6.11 - 81
	Protection cover	6.11 - 83

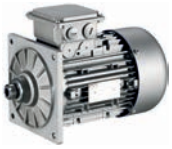

List of abbreviations

$\eta_{100\,\%}$	[%]	Efficiency
$\eta_{75\,\%}$	[%]	Efficiency
$\eta_{50\,\%}$	[%]	Efficiency
cos ϕ		Power factor
I_N	[A]	Rated current
I_{max}	[A]	Max. current consumption
J	[kgcm²]	Moment of inertia
m	[kg]	Mass
M_a	[Nm]	Starting torque
M_b	[Nm]	Stalling torque
M_{max}	[Nm]	Max. torque
M_N	[Nm]	Rated torque
n_N	[r/min]	Rated speed
P_N	[kW]	Rated power
P_{max}	[kW]	Max. power input

U_{max}	[V]	Max. mains voltage
U_{min}	[V]	Min. mains voltage
$U_{N,\Delta}$	[V]	Rated voltage
$U_{N,Y}$	[V]	Rated voltage

CE	Communauté Européenne
CSA	Canadian Standards Association
DIN	Deutsches Institut für Normung e.V.
EMC	Electromagnetic compatibility
EN	European standard
IEC	International Electrotechnical Commission
IM	International Mounting Code
IP	International Protection Code
NEMA	National Electrical Manufacturers Association
UL	Underwriters Laboratory Listed Product
UR	Underwriters Laboratory Recognized Product
VDE	Verband deutscher Elektrotechniker (Association of German Electrical Engineers)
CCC	China Compulsory Certificate
GOST	Certificate for Russian Federation
cURus	Combined certification marks of UL for the USA and Canada
UkrSEPRO	Certificate for Ukraine



Product key

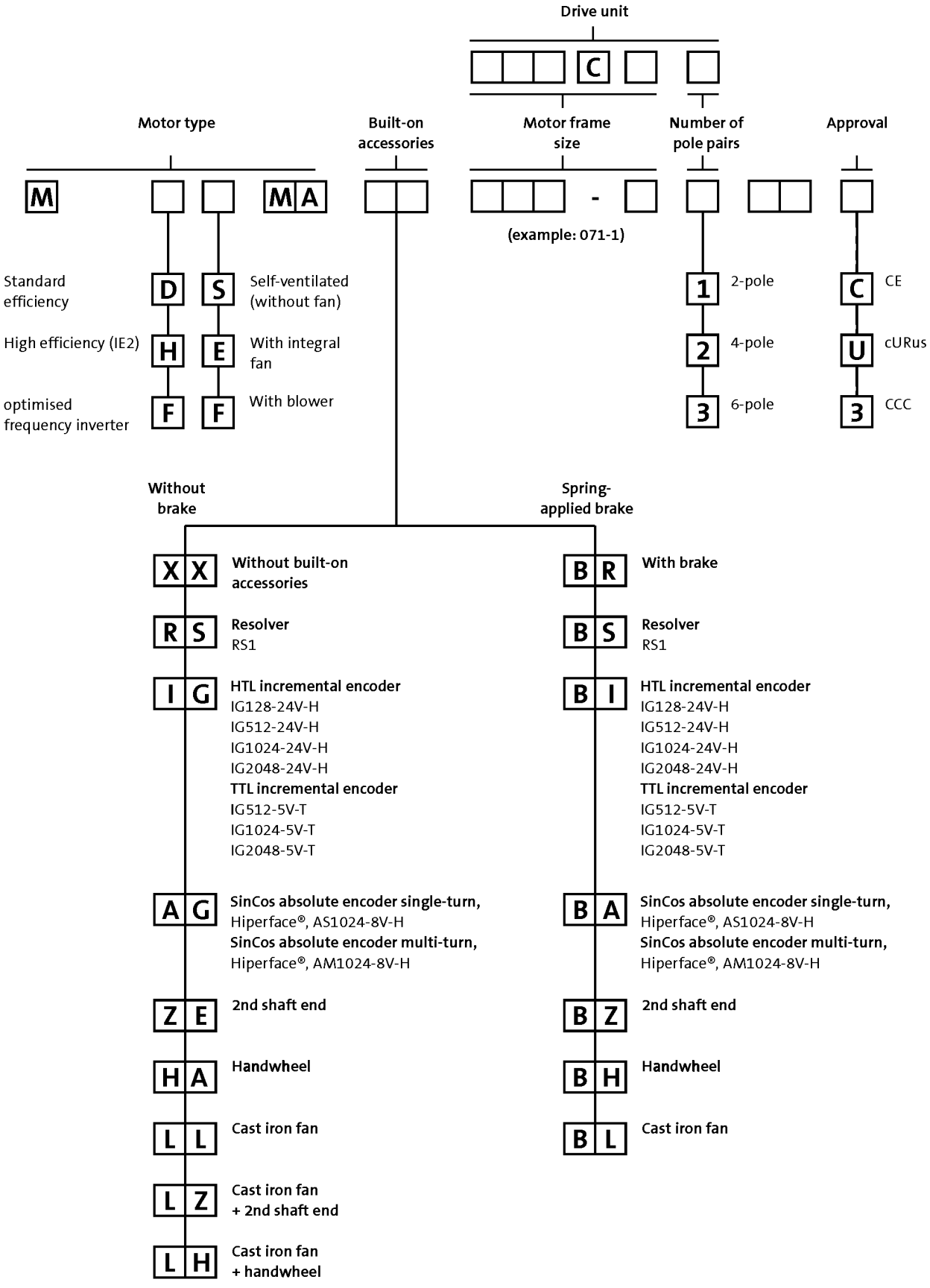
Drive unit
C
Motor type
Built-on accessories
Motor frame size
Number of pole pairs
Approval
M
M A
-
(example: 071-1)
Standard efficiency
D
S
Self-ventilated (without fan)
High efficiency (IE2)
H
E
With integral fan
optimised frequency inverter
F
F
With blower
1
2-pole
2
4-pole
3
6-pole
C
CE
U
cURus
3
CCC
Without brake
Spring-applied brake
X X
Without built-on accessories
B R
With brake
R S
Resolver
RS1
B S
Resolver
RS1
I G
HTL incremental encoder
IG128-24V-H
IG512-24V-H
IG1024-24V-H
IG2048-24V-H
TTL incremental encoder
IG512-5V-T
IG1024-5V-T
IG2048-5V-T
B I
HTL incremental encoder
IG128-24V-H
IG512-24V-H
IG1024-24V-H
IG2048-24V-H
TTL incremental encoder
IG512-5V-T
IG1024-5V-T
IG2048-5V-T
A G
SinCos absolute encoder single-turn,
Hiperface®, AS1024-8V-H
SinCos absolute encoder multi-turn,
Hiperface®, AM1024-8V-H
B A
SinCos absolute encoder single-turn,
Hiperface®, AS1024-8V-H
SinCos absolute encoder multi-turn,
Hiperface®, AM1024-8V-H
Z E
2nd shaft end
B Z
2nd shaft end
H A
Handwheel
B H
Handwheel
L L
Cast iron fan
B L
Cast iron fan
L Z
Cast iron fan
+ 2nd shaft end
L H
Cast iron fan
+ handwheel

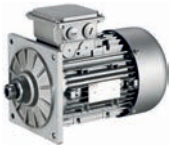

Product information

Special motors have been designed for direct attachment to Lenze gearboxes.

These motors are attached to the gearbox without the use of a clutch. Torque transmission between the toothing and the motor shaft is friction-locked via a tapered connection here.
This motor design means that the geared motors only require a small installation space.

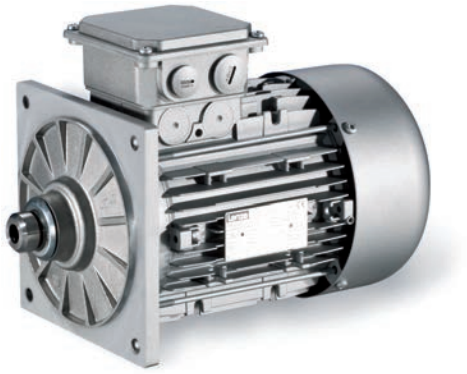

MD/MH L-force three-phase AC motors are available in a power range from 0.06 to 45 kW. From 0.75 kW, they comply with efficiency class IE2 (high efficiency) as per IEC 60034-30.
Since almost all IE2 motors are designed with the same dimensions as the standard efficiency motors, it is easy to switch between the two.
The energy efficiency of the L-force MH three-phase AC motors has been approved by Underwriters Laboratories (UL) as an independent third-party.

Basic versions
- The thermal sensors integrated as standard allow for permanent temperature monitoring and are coordinated to the motor winding's temperature class F (155°C).
- The motors of the basic version are adapted to ambient conditions by enclosure IP55.
- In tough operating conditions, the surface and corrosion protection system is provided to reliably protect the motor from corrosive media.

Options
- Various brake sizes – each available with several braking torques – can be combined with the three-phase AC motors.
- The LongLife version of the brake can easily reach 10 x 10^6 switching cycles.
- A resolver and various incremental and absolute value encoders can be fitted for speed and position detection.
- For fast commissioning, the motors are also available with connectors for the power connection, brake, blower and feedback.
- Instead of an integral fan, the motor can optionally be equipped with a blower. No torque reduction is then necessary, even at speeds below 20 Hz.
- For drive tasks in decentralised applications, the motor can be ordered with the motec inverter connected to the terminal box.
- The motors are available with cURus, GOST-R, CCC and UkrSepro approval.
- Smooth start/braking is possible by increasing the motor's centrifugal mass with a cast iron fan.
- The motor can be equipped with a handwheel for manual setup or emergency operations.
- To protect the fan from falling objects, the fan cover can be equipped with a protection cover.
- A 2nd shaft end is available for further modifications.



Functions and features

Size		
Motor	063	071
Spring-applied brake		
Design	Standard or LongLife design Reduced or standard braking torque With rectifier With manual release lever Low noise	
Feedback		
Design	Resolver Incremental encoder Absolute value encoder (multi-turn)	
Thermal sensor		
Thermal contact	TKO	
Thermal detector	KTY83-110 KTY84-130	
PTC thermistor	PTC	
Motor connection		
Power connection	Terminal box ICN connector HAN10E connector HAN modular connector	
Brake connection	Terminal box ICN connector HAN modular connector HAN10E connector	
Blower connection	Terminal box ICN connector	
Feedback connection	Terminal box ICN connector	
Temperature sensor connection	Terminal box TKO or PTC at connector in the power connection KTY at connector in the feedback connection	
Shaft bearings		
Position of the locating bearing	Standard motors (B3, B5, B14): side B Motors for gearbox direct mounting: side A	
Bearing type	Deep-groove ball bearing with high-temperature resistant grease, 2 sealing discs or cover plates	
Colour		
	Not coated Primed Paint in various corrosion-protection designs in accordance with RAL colours	
Further options		
	Protection cover	Protection cover Increased centrifugal mass Handwheel 2nd shaft end

[1] With 2-pole motors not available.

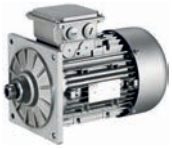

Functions and features

Size			
Motor	080	090	100
Spring-applied brake			
Design	Standard or LongLife design Reduced, standard or increased braking torque With rectifier With manual release lever Low noise		
Feedback			
Design	Resolver Incremental encoder Absolute value encoder (multi-turn)		
Thermal sensor			
Thermal contact	TKO		
Thermal detector	KTY83-110 KTY84-130		
PTC thermistor	PTC		
Motor connection			
Power connection	Terminal box ICN connector HAN10E connector HAN modular connector		
Brake connection	Terminal box ICN connector HAN modular connector HAN10E connector		
Blower connection	Terminal box ICN connector		
Feedback connection	Terminal box ICN connector		
Temperature sensor connection	Terminal box TKO or PTC at connector in the power connection KTY at connector in the feedback connection		
Shaft bearings			
Position of the locating bearing	Standard motors (B3, B5, B14): side B Motors for gearbox direct mounting: side A		
Bearing type	Deep-groove ball bearing with high-temperature resistant grease, 2 sealing discs or cover plates		
Colour			
	Not coated Primed Paint in various corrosion-protection designs in accordance with RAL colours		
Further options			
	Protection cover Increased centrifugal mass Handwheel 2nd shaft end		



Functions and features

Size			
Motor	112	132	160
Spring-applied brake			
Design	Standard design Reduced, standard or increased braking torque With rectifier With manual release lever Low noise		
Feedback			
Design	Resolver Incremental encoder Absolute value encoder (multi-turn)		
Thermal sensor			
Thermal contact	TKO		
Thermal detector	KTY83-110 KTY84-130		
PTC thermistor	PTC		
Motor connection			
Power connection	Terminal box ICN connector HAN10E connector HAN modular connector	Terminal box ICN connector HAN modular connector	Terminal box HAN modular connector
Brake connection	Terminal box ICN connector HAN modular connector HAN10E connector	Terminal box ICN connector HAN modular connector	Terminal box HAN modular connector
Blower connection	Terminal box ICN connector		
Feedback connection	Terminal box ICN connector		
Temperature sensor connection	Terminal box TKO or PTC at connector in the power connection KTY at connector in the feedback connection		
Shaft bearings			
Position of the locating bearing	Standard motors (B3, B5, B14): side B Motors for gearbox direct mounting: side A		
Bearing type	Deep-groove ball bearing with high-temperature resistant grease, 2 sealing discs or cover plates		
Colour			
	Not coated Primed Paint in various corrosion-protection designs in accordance with RAL colours		
Further options			
	Protection cover Increased centrifugal mass Handwheel 2nd shaft end		Protection cover

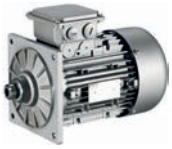

Functions and features

Size			
Motor	180	200	225
Spring-applied brake			
Design	Standard design Reduced, standard or increased braking torque With rectifier With manual release lever Low noise		
Feedback			
Design	Resolver Incremental encoder Absolute value encoder (multi-turn)		
Thermal sensor			
Thermal contact	TKO		
Thermal detector	KTY83-110 KTY84-130		
PTC thermistor	PTC		
Motor connection			
Power connection	Terminal box		
Brake connection	Terminal box		
Blower connection	Terminal box ICN connector		
Feedback connection	Terminal box ICN connector		
Temperature sensor connection	Terminal box		
Shaft bearings			
Position of the locating bearing	Standard motors (B3, B5, B14): side B Motors for gearbox direct mounting: side A		Drive end
Bearing type	Deep-groove ball bearing with high-temperature resistant grease, 2 sealing discs or cover plates		
Colour			
	Not coated Primed Paint in various corrosion-protection designs in accordance with RAL colours		
Further options			



Functions and features

Surface and corrosion protection

For optimum protection of three-phase AC motors against ambient conditions, the surface and corrosion protection system (OKS) offers tailor-made solutions.

Various surface coatings ensure that the motors operate reliably even at high air humidity, in outdoor installation or in the presence of atmospheric impurities. Any colour from the RAL Classic collection can be chosen for the top coat. The three-phase AC motors are also available unpainted (no surface and corrosion protection).

Surface and corrosion protection system	Applications	Measures
OKS-G (primed)	• Dependent on subsequent top coat applied	• 2K PUR priming coat (grey)
OKS-S (small)	• Standard applications • Internal installation in heated buildings • Air humidity up to 90%	• Surface coating as per corrosivity category C1 (in line with EN 12944-2)
OKS-M (medium)	• Internal installation in non-heated buildings • Covered, protected external installation • Air humidity up to 95%	• Surface coating as per corrosivity category C2 (in line with EN 12944-2)
OKS-L (high)	• External installation • Air humidity above 95% • Chemical industry plants • Food industry	• Surface coating as per corrosivity category C3 (in line with EN 12944-2) • Blower cover and B end shield additionally primed • Screws zinc-coated • Cable glands with gaskets • Corrosion-resistant brake with cover ring, stainless friction plate, and chrome-plated armature plate (on request) Optional measures: • Motor recesses sealed off (on request)

Structure of surface coating

Surface and corrosion protection system	Corrosivity category	Surface coating	Colour
	DIN EN ISO 12944-2	Structure	
Without OKS (uncoated)			
OKS-G (primed)		2K PUR priming coat	
OKS-S (small)	C1	2K-PUR top coat	Standard: RAL 7012 Optional: RAL Classic
OKS-M (medium)	C2	2K PUR priming coat 2K-PUR top coat	
OKS-L (high)	C3		

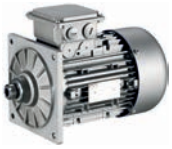

Motor – inverter assignment

Rated frequency 50/60 Hz

- ► Decentralised inverter 8400 motec (E84DVB)
- ► Inverter Drives 8400 (E84AV)

Rated power	Product key		
	Motor	Inverter	
P_N			
[kW]			
0.12	MD□□□□□063-12		
0.18	MD□□□□□063-32		
0.25	MD□□□□□063-42 MD□□□□□071-12		
0.37	MD□□□□□071-32	E84DVB□3714S□□□2□	
0.55	MD□□□□□071-42 MD□□□□□080-12	E84DVB□5514S□□□2□	
0.75	MH□□□□□080-32	E84DVB□7514S□□□2□	
1.10	MH□□□□□090-12	E84DVB□1124S□□□2□	
1.50	MH□□□□□090-32	E84DVB□1524S□□□2□	
2.20	MH□□□□□100-12	E84DVB□2224S□□□2□	
3.00	MH□□□□□100-32	E84DVB□3024S□□□2□	
4.00	MH□□□□□112-22	E84DVB□4024S□□□2□	
5.50	MH□□□□□132-12	E84DVB□5524S□□□2□	
7.50	MH□□□□□132-22	E84DVB□7524S□□□2□	
11.0	MH□□□□□160-22		
15.0	MH□□□□□160-32		
18.5	MH□□□□□180-12		
22.0	MH□□□□□180-32		
30.0	MH□□□□□200-32		
37.0	MH□□□□□225-12		
45.0	MH□□□□□225-22		

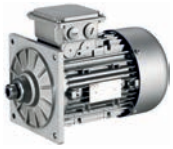

Motor – inverter assignment

Rated frequency 87 Hz

- Decentralised inverter 8400 motec (E84DVB)
- Inverter Drives 8400 (E84AV)

Rated power	Product key		
	Motor	Inverter	
P_N			
[kW]			
0.21	MD□□□□□063-12	E84DVB□5514S□□□2□	
0.33	MD□□□□□063-32		
0.45	MD□□□□□063-42 MD□□□□□071-12		
0.66	MD□□□□□071-32	E84DVB□7514S□□□2□	
1.00	MD□□□□□071-42 MD□□□□□080-12	E84DVB□1124S□□□2□	
1.35	MH□□□□□080-32	E84DVB□1524S□□□2□	
2.00	MH□□□□□090-12	E84DVB□2224S□□□2□	
2.70	MH□□□□□090-32	E84DVB□3024S□□□2□	
3.90	MH□□□□□100-12	E84DVB□4024S□□□2□	
5.40	MH□□□□□100-32	E84DVB□5524S□□□2□	
7.10	MH□□□□□112-22	E84DVB□7524S□□□2□	
9.70	MH□□□□□132-12		
13.2	MH□□□□□132-22		
19.4	MH□□□□□160-22		
26.4	MH□□□□□160-32		
32.5	MH□□□□□180-12		

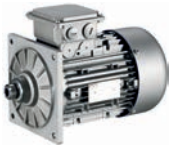

Dimensioning

Torque derating at low motor frequencies

Motor size-dependent torque reduction, taking into account the thermal response during operation on the inverter.

Torque characteristics

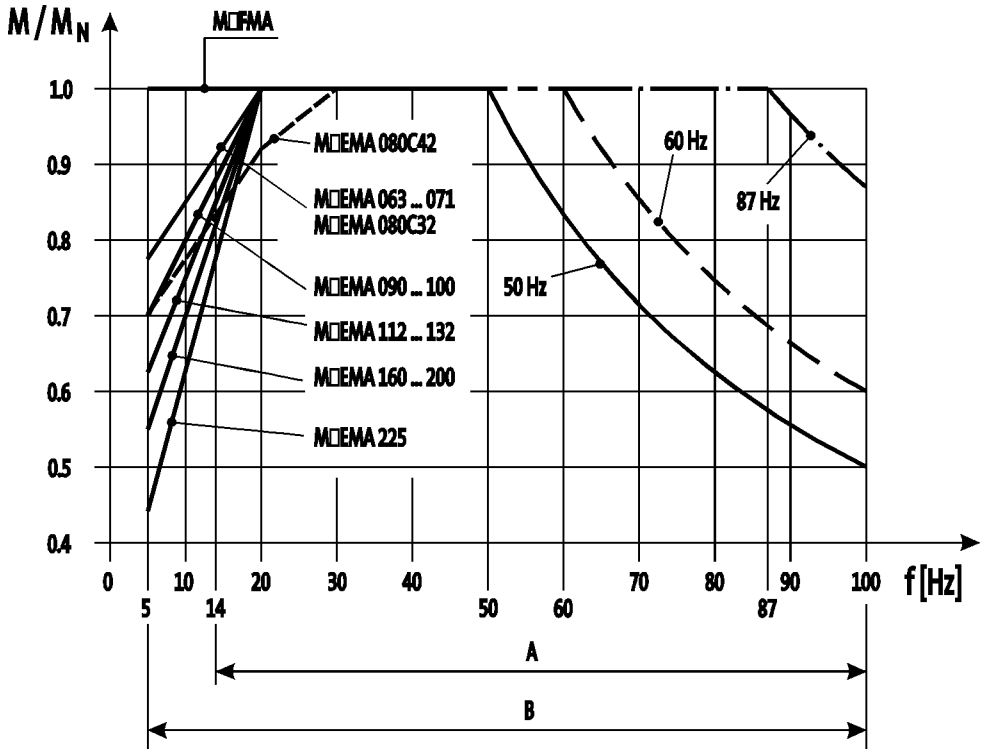

A = Operation with integral fan and brake
B = Operation with integral fan and brake control "Holding current reduction"

► The motor specifications stated in this catalogue for inverter operation apply to operation with a Lenze inverter. If you are uncertain, get in touch with the manufacturer of the inverter to ask whether the device is capable of driving the motor with the stated specifications (e.g. setting range, base frequency).

You can use the Drive Solution Designer for precise drive dimensioning.

The Drive Solution Designer helps you to carry out a fast and high-quality drive dimensioning.
The software includes well-founded and proven knowledge on drive applications and electro-mechanical drive components.

Please contact your Lenze sales office.



Standards and operating conditions

Enclosure			
EN 60529			IP55
Energy efficiency class			
IEC 60034-30			IE2
IEC 60034-2-1			Methodology for measuring efficiency
Approval			
Class			cURus/UL Energy-verified [1)] CCC GOST-R UkrSepro
Temperature class			
IEC/EN 60034-1; utilisation			B
IEC/EN 60034-1; insulation system (enamel-insulated wire)			F
Min. ambient operating temperature			
	$T_{opr,min}$	[°C]	-20
Max. ambient operating temperature			
	$T_{opr,max}$	[°C]	40
With power reduction	$T_{opr,max}$	[°C]	60
Site altitude			
Amsl	H_{max}	[m]	4000
Max. speed			
	n_{max}	[r/min]	4500

[1)] Motor frame size 225, in preparation.

► In the European Union, the ErP Directive stipulates minimum efficiency levels for three-phase AC motors. Geared three-phase AC motors that do not conform with this Directive do not meet CE requirements and must not be marketed in the European Economic Area. For further information about the ErP Directive and the Lenze products to which it relates, please refer to the brochure entitled "International efficiency directives for three-phase AC motors".

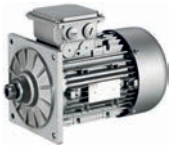

Rated data for 50 Hz

2-pole motors

	P_N	n_N	$U_{N,\Delta}$	$I_{N,\Delta}$	$U_{N,Y}$	$I_{N,Y}$	I_a/I_N
			± 10 %		± 10 %		
	[kW]	[r/min]	[V]	[A]	[V]	[A]	
MD□□□□□063-11	0.18	2740	230	0.80	400	0.46	4.30
MD□□□□□063-31	0.25	2710	230	1.10	400	0.60	3.70
MD□□□□□071-11	0.37	2720	230	1.50	400	0.90	4.40
MD□□□□□071-31	0.55	2630	230	2.40	400	1.40	3.80

	M_N	M_a	M_b	cos ϕ	$\eta_{75\,\%}$	$\eta_{100\,\%}$	J [1]	m [1]
	[Nm]	[Nm]	[Nm]		[%]	[%]	[kgcm²]	[kg]
MD□□□□□063-11	0.63	1.50	1.50	0.88	66.5	66.0	1.70	3.90
MD□□□□□063-31	0.90	1.90	2.00	0.89	67.0	66.0	1.70	3.80
MD□□□□□071-11	1.29	3.10	2.90	0.92	71.0	69.0	5.10	6.00
MD□□□□□071-31	2.00	3.80	4.20	0.93	70.0	63.0	5.10	6.50

4-pole motors

	P_N	n_N	$U_{N,\Delta}$ [2]	$I_{N,\Delta}$	$U_{N,Y}$	$I_{N,Y}$	I_a/I_N
			± 10 %		± 10 %		
	[kW]	[r/min]	[V]	[A]	[V]	[A]	
MD□□□□□063-02	0.060	1425	230	0.42	400	0.24	3.50
MD□□□□□063-22	0.090	1375	230	0.48	400	0.28	2.90
MD□□□□□063-12	0.12	1425	230	0.85	400	0.49	3.10
MD□□□□□063-32	0.18	1365	230	1.00	400	0.58	2.70
MD□□□□□063-42	0.25	1370	230	1.40	400	0.82	2.90
MD□□□□□071-32	0.37	1410	230	1.60	400	0.95	3.30
MD□□□□□071-42	0.55	1405	230	2.40	400	1.40	3.50

	M_N	M_a	M_b	cos ϕ	$\eta_{75\,\%}$	$\eta_{100\,\%}$	J [1]	m [1]
	[Nm]	[Nm]	[Nm]		[%]	[%]	[kgcm²]	[kg]
MD□□□□□063-02	0.40	1.30	1.36	0.57	59.0	63.0	3.30	3.90
MD□□□□□063-22	0.63	1.30	1.39	0.71	63.0	65.0	3.30	3.90
MD□□□□□063-12	0.80	2.50	2.64	0.56	58.0	63.0	3.30	4.10
MD□□□□□063-32	1.26	2.50	2.61	0.70	63.0	64.0	3.30	4.10
MD□□□□□063-42	1.74	3.80	4.10	0.67	65.0	66.0	3.70	4.40
MD□□□□□071-32	2.51	4.76	5.81	0.77	73.0	73.0	10.7	5.80
MD□□□□□071-42	3.74	7.85	9.12	0.77	74.0	74.0	12.8	6.40

[1] Without accessories

[2] Operation at 87 Hz is possible with 4-pole motors whose rated data at 50 Hz displays the voltage values Δ 230 V.
With motor frame sizes 132-12 to 225-22, the required voltage must also be specified in your order.



Rated data for 50 Hz

4-pole motors

	P_N	n_N	$U_{N,\Delta}$ [2]	$I_{N,\Delta}$	$U_{N,Y}$	$I_{N,Y}$	I_a/I_N
			± 10 %		± 10 %		
	[kW]	[r/min]	[V]	[A]	[V]	[A]	
MH□□□□□080-32	0.75	1410	230	3.10	400	1.80	5.00
MH□□□□□090-12	1.10	1430	230	4.60	400	2.70	5.40
MH□□□□□090-32	1.50	1435	230	5.80	400	3.30	6.30
MH□□□□□100-12	2.20	1445	230	8.60	400	5.00	6.00
MH□□□□□100-32	3.00	1445	230	12.1	400	7.00	6.50
MH□□□□□112-22	4.00	1455	230	14.5	400	8.40	6.00
MH□□□□□132-12	5.50	1470	230 400 [3]	20.6 11.9	400	11.9	6.10
MH□□□□□132-22	7.50	1460	230 400 [3]	27.0 15.6	400	15.6	8.50
MH□□□□□160-22	11.0	1470	230 400 [3]	37.7 21.8	400	21.8	8.00
MH□□□□□160-32	15.0	1470	230 400 [3]	50.3 29.1	400	29.1	8.20
MH□□□□□180-12	18.5	1475	230 400 [3]	58.8 34.0	400	34.0	8.40
MH□□□□□180-32	22.0	1470	230 400 [3]	68.9 39.8	400	39.8	7.80
MH□□□□□180-42	30.0	1465	230 400 [3]	93.8 53.9	400	53.9	7.00
MH□□□□□225-12	37.0	1483	230 400 [3]	113 65.0	400	65.0	7.50
MH□□□□□225-22	45.0	1480	230 400 [3]	137 79.0	400	79.0	7.60

	M_N	M_a	M_b	cos ϕ	$\eta_{50\,\%}$	$\eta_{75\,\%}$	$\eta_{100\,\%}$	J [1]	m [1]
	[Nm]	[Nm]	[Nm]		[%]	[%]	[%]	[kgcm²]	[kg]
MH□□□□□080-32	5.08	12.0	12.1	0.84	74.9	79.6	79.6	28.0	11.0
MH□□□□□090-12	7.35	20.3	24.2	0.76	77.4	81.6	82.0	32.0	16.0
MH□□□□□090-32	10.0	33.0	34.0	0.76	82.2	83.4	82.8	36.0	18.0
MH□□□□□100-12	14.5	48.0	55.0	0.80	85.4	86.7	86.3	61.0	24.0
MH□□□□□100-32	19.8	67.0	76.0	0.73	83.8	85.6	85.5	66.0	26.5
MH□□□□□112-22	26.3	81.0	100	0.80	86.3	88.2	88.3	135	38.0
MH□□□□□132-12	35.7	90.0	108	0.77	88.2	89.3	89.2	290	59.0
MH□□□□□132-22	49.1	110	175	0.79	87.6	88.9	88.7	336	66.0
MH□□□□□160-22	71.5	164	243	0.82	89.4	90.0	89.8	570	109
MH□□□□□160-32	97.4	224	292	0.82	90.2	90.8	90.6	760	124
MH□□□□□180-12	120	359	371	0.86	90.8	91.4	91.2	1390	175
MH□□□□□180-32	143	400	372	0.87	91.4	92.0	91.6	1440	180
MH□□□□□180-42	196	469	528	0.87	91.9	92.5	92.3	1850	200
MH□□□□□225-12	238	620	620	0.87	94.0	94.6	94.3	4610	395
MH□□□□□225-22	290	698	669	0.88	93.7	94.5	94.3	5300	415

[1] Without accessories
[2] Operation at 87 Hz is possible with 4-pole motors whose rated data at 50 Hz displays the voltage values Δ 230 V.
With motor frame sizes 132-12 to 225-22, the required voltage must also be specified in your order.
[3] Star/delta start-up possible at 400 V.

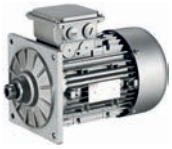

Rated data for 50 Hz

6-pole motors

	P_N	n_N	$U_{N,\Delta}$	$I_{N,\Delta}$	$U_{N,Y}$	$I_{N,Y}$	I_a/I_N
			± 10 %		± 10 %		
	[kW]	[r/min]	[V]	[A]	[V]	[A]	
MD□□□□□071-13	0.18	930	230	1.10	400	0.60	3.90
MD□□□□□071-33	0.25	930	230	1.80	400	1.10	2.80
MD□□□□□080-13	0.37	950	230	2.20	400	1.30	4.00
MD□□□□□080-33	0.55	930	230	2.90	400	1.70	3.50

	M_N	M_a	M_b	cos ϕ	$\eta_{75\,\%}$	$\eta_{100\,\%}$	J [1]	m [1]
	[Nm]	[Nm]	[Nm]		[%]	[%]	[kgcm²]	[kg]
MD□□□□□071-13	1.80	5.00	5.00	0.66	67.0	69.0	12.5	6.50
MD□□□□□071-33	2.50	6.60	6.60	0.66	67.0	68.0	12.5	6.50
MD□□□□□080-13	3.70	10.1	10.7	0.63	68.0	69.0	26.0	11.0
MD□□□□□080-33	5.60	12.2	12.8	0.70	68.0	68.0	26.0	11.0

[1] Without accessories



Rated data for 60 Hz

- The motors are designed for an operation at 265/460 V but are also able to be operated at 230 V, 60 Hz. The same technical data apply, the starting torque is a bit lower.
- The motors have a service factor of 1.15 at 60 Hz. The service factor indicates the permissible overload during operation within the mains voltage fluctuations.

2-pole motors

	P_N	n_N	$U_{N,\Delta}$	$I_{N,\Delta}$	$U_{N,Y}$	$I_{N,Y}$	I_a/I_N
			± 10 %		± 10 %		
	[kW]	[r/min]	[V]	[A]	[V]	[A]	
MD□□□□□063-11	0.18	3370	265	0.72	460	0.41	5.50
MD□□□□□063-31	0.25	3390	265	0.88	460	0.51	4.80
MD□□□□□071-11	0.37	3360	265	1.30	460	0.76	5.50
MD□□□□□071-31	0.55	3240	265	2.10	460	1.20	4.80

	M_N	M_a	M_b	cos ϕ	$\eta_{75\,\%}$	$\eta_{100\,\%}$	J [1]	m [1]
	[Nm]	[Nm]	[Nm]		[%]	[%]	[kgcm²]	[kg]
MD□□□□□063-11	0.51	1.38	1.38	0.84	68.3	67.8	1.70	3.90
MD□□□□□063-31	0.72	1.74	1.84	0.86	71.1	70.0	1.70	3.80
MD□□□□□071-11	1.05	2.85	2.66	0.91	74.4	72.3	5.10	6.00
MD□□□□□071-31	1.62	3.49	3.86	0.90	73.6	66.3	5.10	6.50

4-pole motors

	P_N	n_N	$U_{N,\Delta}$ [2]	$I_{N,\Delta}$	$U_{N,Y}$	$I_{N,Y}$	I_a/I_N
			± 10 %		± 10 %		
	[kW]	[r/min]	[V]	[A]	[V]	[A]	
MD□□□□□063-02	0.060	1735	265	0.37	460	0.21	4.40
MD□□□□□063-22	0.090	1695	265	0.43	460	0.25	4.20
MD□□□□□063-12	0.12	1735	265	0.69	460	0.40	4.00
MD□□□□□063-32	0.18	1695	265	0.80	460	0.46	3.60
MD□□□□□063-42	0.25	1680	265	1.30	460	0.75	3.80
MD□□□□□071-32	0.37	1720	265	1.50	460	0.84	3.90
MD□□□□□071-42	0.55	1720	265	2.10	460	1.20	4.10

	M_N	M_a	M_b	cos ϕ	$\eta_{75\,\%}$	$\eta_{100\,\%}$	J [1]	m [1]
	[Nm]	[Nm]	[Nm]		[%]	[%]	[kgcm²]	[kg]
MD□□□□□063-02	0.33	1.10	1.36	0.54	60.0	63.0	3.30	3.90
MD□□□□□063-22	0.51	1.10	1.40	0.67	64.9	67.0	3.30	3.90
MD□□□□□063-12	0.66	2.25	2.64	0.55	58.0	63.0	3.30	4.10
MD□□□□□063-32	1.00	2.21	2.56	0.68	65.0	66.0	3.30	4.10
MD□□□□□063-42	1.40	3.71	4.20	0.60	64.0	66.0	3.70	4.40
MD□□□□□071-32	2.05	4.40	5.80	0.74	74.0	75.0	10.7	5.80
MD□□□□□071-42	3.05	7.00	9.00	0.73	76.0	77.0	12.8	6.40

[1] Without accessories
[2] Operation at 87 Hz is possible with 4-pole motors whose rated data at 60 Hz displays the voltage values Δ 265 V.
With motor frame sizes 132-12 to 225-22, the required voltage must also be specified in your order.



Rated data for 60 Hz

4-pole motors

- The motors are designed for an operation at 265/460 V but are also able to be operated at 230 V, 60 Hz. The same technical data apply, the starting torque is a bit lower.
- The motors have a service factor of 1.15 at 60 Hz. The service factor indicates the permissible overload during operation within the mains voltage fluctuations.

	P_N	n_N	$U_{N,\Delta}$ [2]	$I_{N,\Delta}$	$U_{N,Y}$	$I_{N,Y}$	I_a/I_N
			± 10 %		± 10 %		
	[kW]	[r/min]	[V]	[A]	[V]	[A]	
MH□□□□□080-32	0.75	1720	265	2.80	460	1.60	5.80
MH□□□□□090-12	1.10	1740	265	4.00	460	2.30	6.50
MH□□□□□090-32	1.50	1745	265	5.10	460	3.00	7.20
MH□□□□□100-12	2.20	1750	265	7.70	460	4.40	6.90
MH□□□□□100-32	3.00	1755	265	10.6	460	6.10	7.70
MH□□□□□112-22	4.00	1760	265	12.8	460	7.40	7.00
MH□□□□□132-12	5.50	1775	265 460 [3]	18.0 10.4	460	10.4	7.10
MH□□□□□132-22	7.50	1765	265 460 [3]	24.2 14.0	460	14.0	9.70
MH□□□□□160-22	11.0	1775	265 460 [3]	32.5 18.7	460	18.7	9.40
MH□□□□□160-32	15.0	1775	265 460 [3]	44.1 24.5	460	24.5	9.80
MH□□□□□180-12	18.5	1775	265 460 [3]	51.1 29.4	460	29.4	9.70
MH□□□□□180-32	22.0	1775	265 460 [3]	59.7 34.4	460	34.4	9.00
MH□□□□□180-42	30.0	1770	265 460 [3]	80.7 46.5	460	46.5	8.10
MH□□□□□225-12	37.0	1787	265 460 [3]	92.5 53.4	460	53.4	8.70
MH□□□□□225-22	45.0	1784	265 460 [3]	111 64.2	460	64.2	8.80

	M_N	M_a	M_b	cos ϕ	$\eta_{50\,\%}$	$\eta_{75\,\%}$	$\eta_{100\,\%}$	J [1]	m [1]
	[Nm]	[Nm]	[Nm]		[%]	[%]	[%]	[kgcm²]	[kg]
MH□□□□□080-32	4.16	9.37	9.89	0.82	77.9	81.5	82.5	28.0	11.0
MH□□□□□090-12	6.04	17.0	20.0	0.71	79.3	83.0	84.0	32.0	16.0
MH□□□□□090-32	8.21	27.0	28.0	0.75	79.3	83.0	84.0	36.0	18.0
MH□□□□□100-12	12.0	40.0	47.0	0.78	82.6	86.5	87.5	61.0	24.0
MH□□□□□100-32	16.3	55.0	64.0	0.71	84.2	86.6	87.5	66.0	26.5
MH□□□□□112-22	21.7	69.0	84.0	0.79	84.2	86.6	87.5	135	38.0
MH□□□□□132-12	29.6	74.0	92.0	0.77	86.1	88.6	89.5	290	59.0
MH□□□□□132-22	40.6	92.0	147	0.79	86.1	88.6	89.5	336	66.0
MH□□□□□160-22	59.2	148	231	0.81	89.3	90.9	91.0	570	109
MH□□□□□160-32	80.7	210	274	0.81	89.3	90.9	91.0	760	124
MH□□□□□180-12	99.5	338	348	0.86	90.6	92.3	92.4	1390	175
MH□□□□□180-32	118	379	355	0.87	90.6	92.3	92.4	1440	180
MH□□□□□180-42	162	440	505	0.87	92.0	92.9	93.0	1850	200
MH□□□□□225-12	198	590	590	0.87	92.0	92.9	93.0	4610	395
MH□□□□□225-22	241	660	635	0.88	92.6	93.5	93.6	5300	415

[1] Without accessories

[2] Operation at 87 Hz is possible with 4-pole motors whose rated data at 60 Hz displays the voltage values Δ 265 V.
With motor frame sizes 132-12 to 225-22, the required voltage must also be specified in your order.

[3] Star/delta start-up possible at 460 V.



Rated data for 60 Hz

6-pole motors

- The motors are designed for an operation at 265/460 V but are also able to be operated at 230 V, 60 Hz. The same technical data apply, the starting torque is a bit lower.
- The motors have a service factor of 1.15 at 60 Hz. The service factor indicates the permissible overload during operation within the mains voltage fluctuations.

	P_N	n_N	$U_{N,\Delta}$	$I_{N,\Delta}$	$U_{N,Y}$	$I_{N,Y}$	I_a/I_N
			± 10 %		± 10 %		
	[kW]	[r/min]	[V]	[A]	[V]	[A]	
MD□□□□□071-13	0.18	1140	265	0.95	460	0.55	4.60
MD□□□□□071-33	0.25	1140	265	1.70	460	1.00	3.40
MD□□□□□080-13	0.37	1160	265	2.00	460	1.20	4.60
MD□□□□□080-33	0.55	1140	265	2.60	460	1.50	4.10

	M_N	M_a	M_b	cos ϕ	$\eta_{75\,\%}$	$\eta_{100\,\%}$	J [1]	m [1]
	[Nm]	[Nm]	[Nm]		[%]	[%]	[kgcm²]	[kg]
MD□□□□□071-13	1.47	4.59	4.59	0.62	68.4	70.5	12.5	6.50
MD□□□□□071-33	2.04	6.06	6.06	0.61	69.1	70.1	12.5	6.50
MD□□□□□080-13	3.03	9.28	9.83	0.59	69.5	70.5	26.0	11.0
MD□□□□□080-33	4.56	11.2	11.8	0.66	70.7	70.7	26.0	11.0

[1] Without accessories



Rated data for 87 Hz

4-pole motors

	P_N	n_N	M_N	M_{max}	$U_{N,\Delta}$	$I_{N,\Delta}$	cos ϕ	$\eta_{50\,\%}$	$\eta_{75\,\%}$	$\eta_{100\,\%}$	J [1]	m [1]
					± 10 %							
	[kW]	[r/min]	[Nm]	[Nm]	[V]	[A]		[%]	[%]	[%]	[kgcm²]	[kg]
MD□□□□□063-02	0.11	2535	0.40	1.60	400	0.42	0.55		62.0	67.0	3.30	3.90
MD□□□□□063-22	0.16	2485	0.63	2.50	400	0.48	0.67		66.0	70.0	3.30	3.90
MD□□□□□063-12	0.21	2535	0.80	3.20	400	0.85	0.52		61.0	66.0	3.30	4.10
MD□□□□□063-32	0.33	2475	1.26	5.00	400	1.00	0.65		68.0	71.0	3.30	4.10
MD□□□□□063-42	0.45	2480	1.74	7.00	400	1.40	0.63		66.0	73.0	3.70	4.40
MD□□□□□071-32	0.66	2520	2.51	10.0	400	1.60	0.72		76.0	78.0	10.7	5.80
MD□□□□□071-42	1.00	2515	3.74	15.0	400	2.40	0.74		79.0	80.0	12.8	6.40
MH□□□□□080-32	1.35	2520	5.12	20.0	400	3.10	0.84	77.3	81.6	83.5	28.0	11.0
MH□□□□□090-12	2.00	2540	7.52	30.0	400	4.60	0.78	80.4	84.9	86.5	32.0	16.0
MH□□□□□090-32	2.70	2545	10.1	40.0	400	5.80	0.76	82.3	85.5	86.0	36.0	18.0
MH□□□□□100-12	3.90	2555	14.6	60.0	400	8.60	0.83	85.7	89.6	90.0	61.0	24.0
MH□□□□□100-32	5.40	2555	20.2	80.0	400	12.1	0.76	84.7	87.9	88.5	66.0	26.5
MH□□□□□112-22	7.10	2565	26.4	106	400	14.5	0.83	87.4	90.2	90.9	135	38.0
MH□□□□□132-12	9.70	2580	35.9	144	400	20.6	0.82	88.2	91.4	91.8	290	59.0
MH□□□□□132-22	13.2	2570	49.1	196	400	27.0	0.82	88.2	90.1	90.7	336	66.0
MH□□□□□160-22	19.4	2580	71.8	287	400	37.7	0.81	90.6	91.0	91.6	570	109
MH□□□□□160-32	26.4	2580	97.7	391	400	50.3	0.81	91.4	91.0	91.6	760	124
MH□□□□□180-12	32.5	2585	120	480	400	58.8	0.86	92.0	92.2	92.8	1390	175
MH□□□□□180-32	38.7	2580	143	573	400	68.9	0.87	92.1	92.9	93.4	1440	180
MH□□□□□180-42	52.7	2575	196	782	400	92.6	0.87	92.6	92.7	93.2	1850	200
MH□□□□□225-12	64.0	2593	236	920	400	113	0.87	93.0	94.4	94.8	4610	395
MH□□□□□225-22	78.0	2590	288	1150	400	137	0.85	93.5	94.3	94.7	5300	415

[1] Without accessories

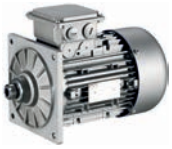

Dimensions, self-ventilated (2-pole)

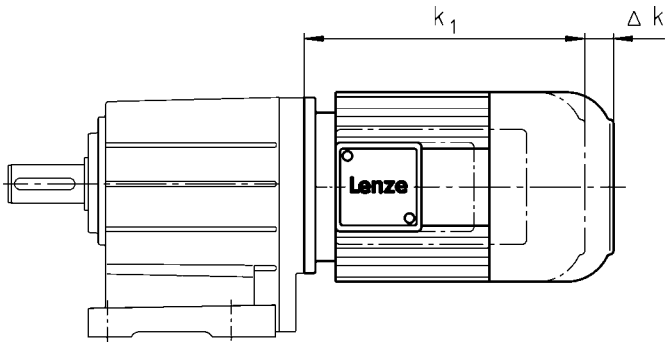

	Motor type			
	MDEMAXX	MDEMABR	MDEMABL	MDEMALL

Motor frame size				
	Δ k	Δ k	Δ k	Δ k
	[mm]	[mm]	[mm]	[mm]
063-11 063-31	0	40		
071-11 071-31		52	52	0



Dimensions, self-ventilated (4-pole)

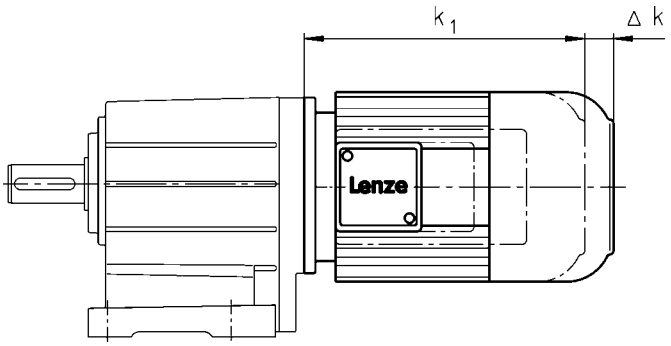

	Motor type					
	MDEMAXX	MDEMABR	MDEMABS MDEMABI MDEMABA	MDEMABL	MDEMARS MDEMAIG MDEMAAG	MDEMALL
Motor frame size						
	Δ k	Δ k	Δ k	Δ k	Δ k	Δ k
	[mm]	[mm]	[mm]	[mm]	[mm]	[mm]
063-02 063-22	0	71	135		71	
063-12 063-32 063-42		40	103		56	
071-32 071-42		52	96	52	52	0



Dimensions, self-ventilated (4-pole)

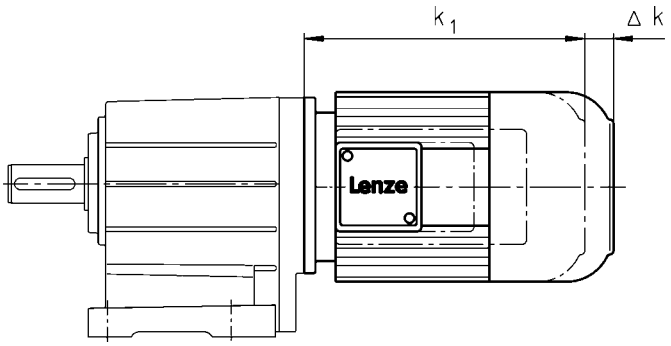

	Motor type			
	MHEMAXX	MHEMABR	MHEMABS MHEMABI MHEMABA	MHEMALL MHEMARS MHEMAIG MHEMAAG
Motor frame size				
	Δ k	Δ k	Δ k	Δ k
	[mm]	[mm]	[mm]	[mm]
080-32	0	73	111	111
090-12 090-32		68	105	87
100-12 100-32		76	101	81
112-22		90	120	80
132-12 132-22		110	125	103
160-22 160-32		105	191	83
180-12 180-32		113	192	79
180-42				
225-12 225-22			193	80



Dimensions, self-ventilated (6-pole)

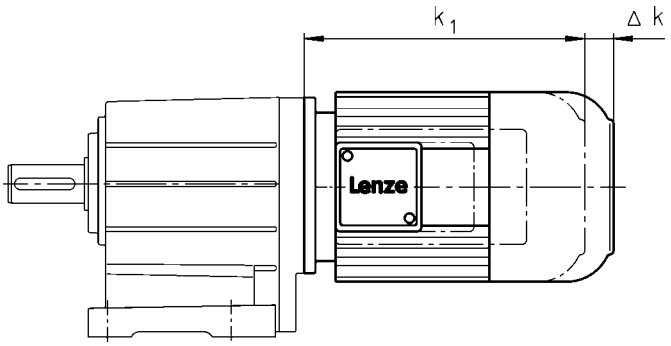

	Motor type					
	MDEMAXX	MDEMABR	MDEMABS MDEMABI MDEMABA	MDEMABL	MDEMARS MDEMAIG MDEMAAG	MDEMALL

Motor frame size						
	Δ k	Δ k	Δ k	Δ k	Δ k	Δ k
	[mm]	[mm]	[mm]	[mm]	[mm]	[mm]
071-13 071-33	0	52	96	52	52	0
080-13 080-33		73	111	73	111	4



Dimensions, forced ventilated (2-pole)

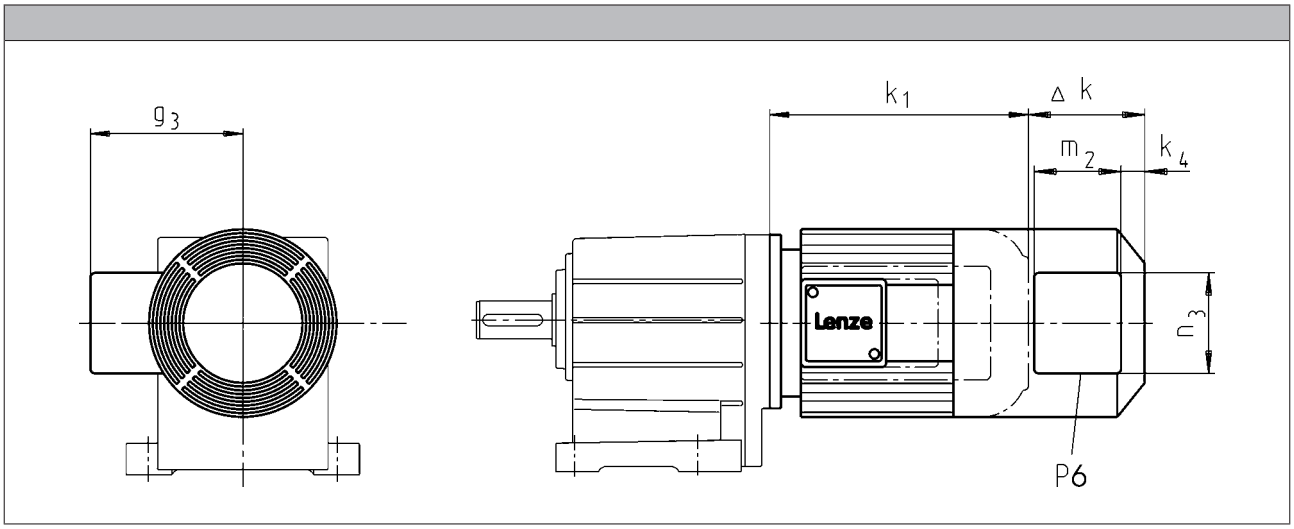

Motor type							
	MDFMAXX	MDFMABR					

Motor frame size							
	Δ k	Δ k	k_4	g_3	m_2	n_3	P_6
	[mm]	[mm]	[mm]	[mm]	[mm]	[mm]	[mm]
063-11 063-31	128	170	12	115	95	105	1x M16x1.5
071-11 071-31		165		122			

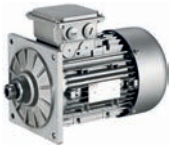

Dimensions, forced ventilated (4-pole)

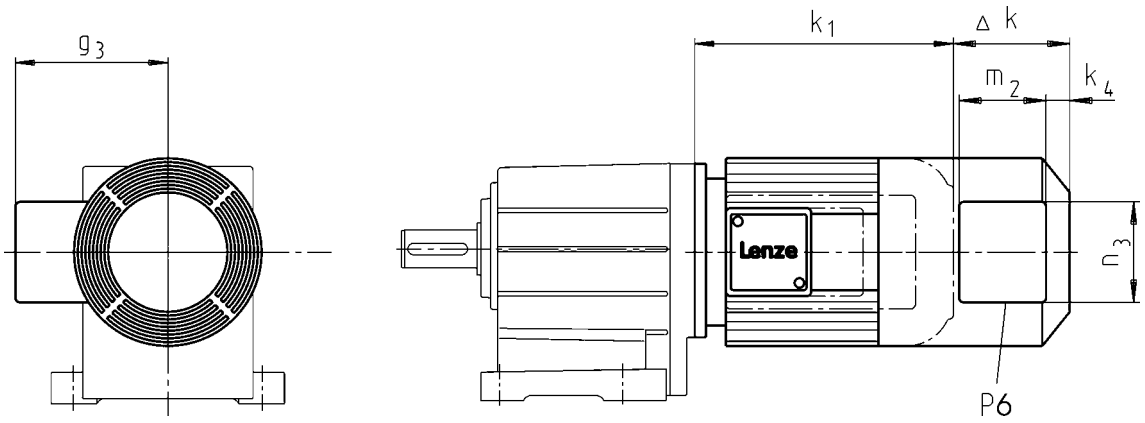

Motor type									
	MDFMAXX	MDFMABR	MDFMABS MDFMABI MDFMABA	MDFMARS MDFMAIG MDFMAAG					

Motor frame size									
	Δ k	Δ k	Δ k	Δ k	k_4	g_3	m_2	n_3	P_6
	[mm]	[mm]	[mm]	[mm]	[mm]	[mm]	[mm]	[mm]	[mm]
063-12 063-32 063-42	128	170	170	128	12	115	95	105	1x M16x1.5
071-32 071-42		165	165			122			



Dimensions, forced ventilated (4-pole)

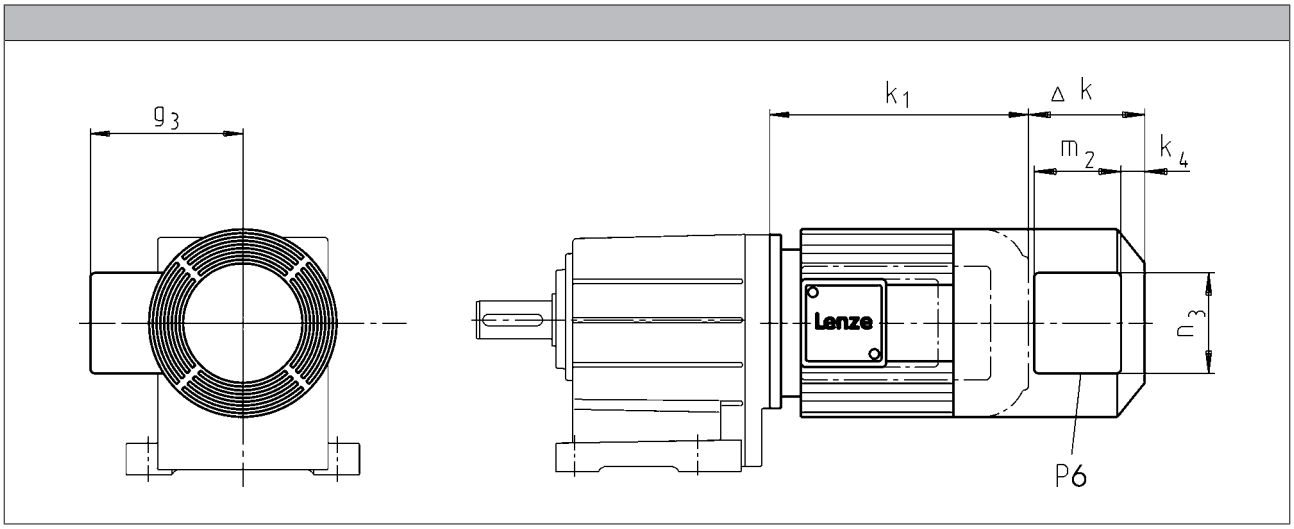

Motor type									
	MHFMAXX	MHFMABR	MHFMABS MHFMABI MHFMABA	MHFMARS MHFMAIG MHFMAAG					

Motor frame size									
	Δ k	Δ k	Δ k	Δ k	k_4	g_3	m_2	n_3	P_6
	[mm]	[mm]	[mm]	[mm]	[mm]	[mm]	[mm]	[mm]	[mm]
080-32	128	183	183	128	13	132	96	106	1x M16x1.5
090-12 090-32		181	181		22	141	95	105	
100-12 100-32	109	170	170	109		150			
112-22	102	183	183	183		162			
132-12 132-22	115	202	202	202	32	182			
160-22 160-32	149	179	237	224	31	209	96	106	
180-12 180-32		215	275	215					
180-42	155		260						
225-12 225-22	213	213	213	213					

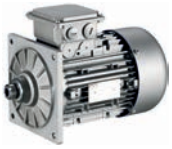

Dimensions, forced ventilated (6-pole)

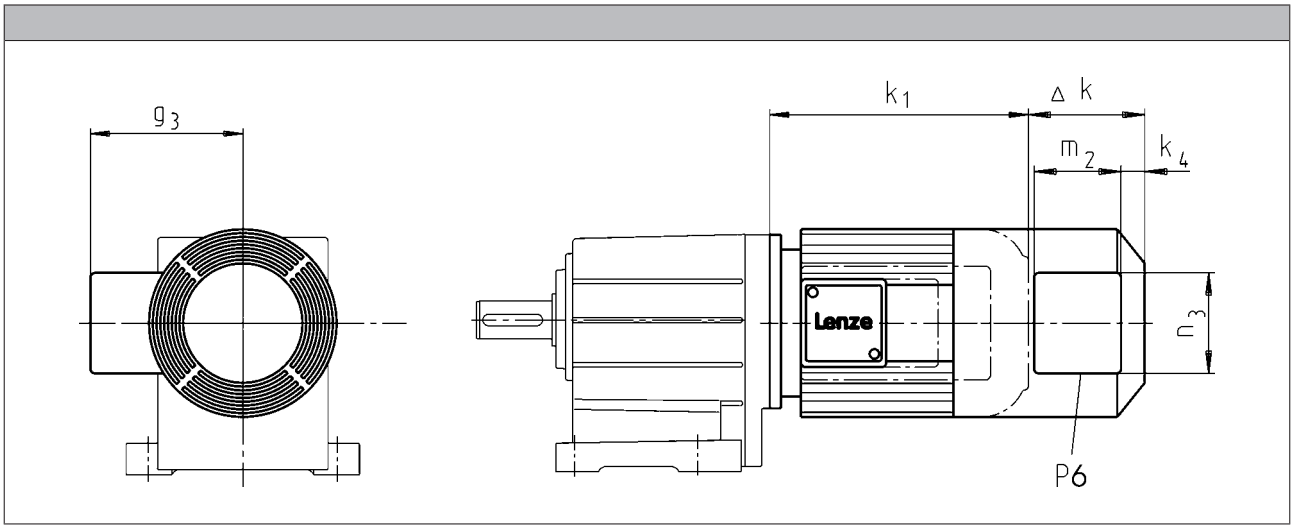

Motor type									
	MDFMAXX	MDFMABR	MDFMABS MDFMABI MDFMABA	MDFMARS MDFMAIG MDFMAAG					

Motor frame size									
	Δ k	Δ k	Δ k	Δ k	k_4	g_3	m_2	n_3	P_6
	[mm]	[mm]	[mm]	[mm]	[mm]	[mm]	[mm]	[mm]	[mm]
071-13 071-33	128	165	165	128	12	122	95	105	1x M16x1.5
080-13 080-33		183	183		13	132	96	106	



Dimensions, 8400 motec inverter

Rated frequency 50/60 Hz

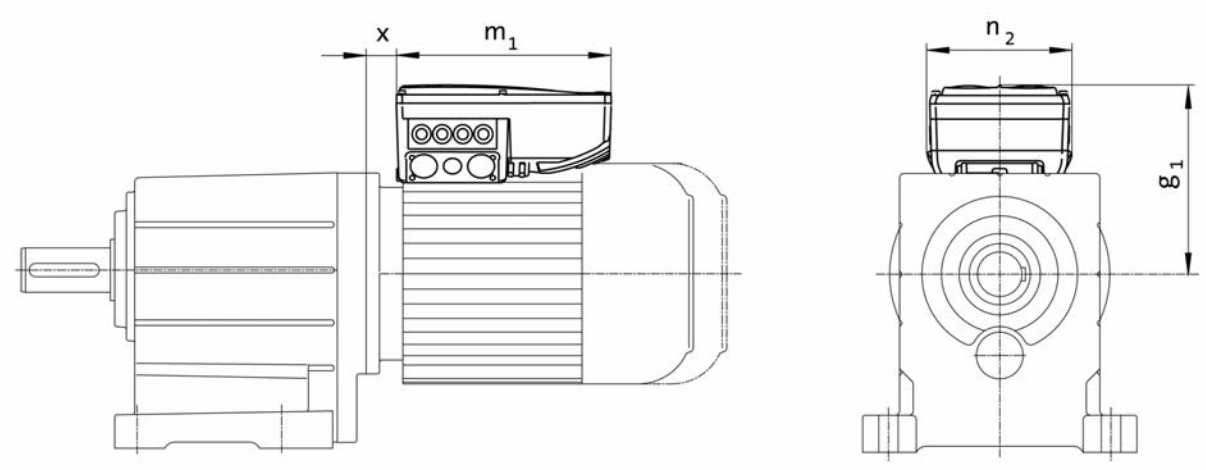

Product key					
Motor	Inverter				
		$g_{1,\ 50Hz}$	$m_{1,\ 50Hz}$	$n_{2,\ 50Hz}$	x_{50Hz}
		[mm]	[mm]	[mm]	[mm]
MD□□□□□071-32	E84DVB□3714S□□□2□	163	241	161	21.0
MD□□□□□071-42	E84DVB□5514S□□□2□				
MH□□□□□080-32	E84DVB□7514S□□□2□	172			25.5
MH□□□□□090-12	E84DVB□1124S□□□2□	177			28.8
MH□□□□□090-32	E84DVB□1524S□□□2□				
MH□□□□□100-12	E84DVB□2224S□□□2□	217	260	176	29.6
MH□□□□□100-32	E84DVB□3024S□□□2□				
MH□□□□□112-22	E84DVB□4024S□□□2□	282	325	195	19.0
MH□□□□□132-12	E84DVB□5524S□□□2□	301			34.5
MH□□□□□132-22	E84DVB□7524S□□□2□				

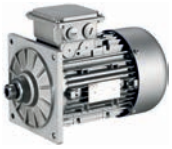

Dimensions, 8400 motec inverter

Rated frequency 87 Hz

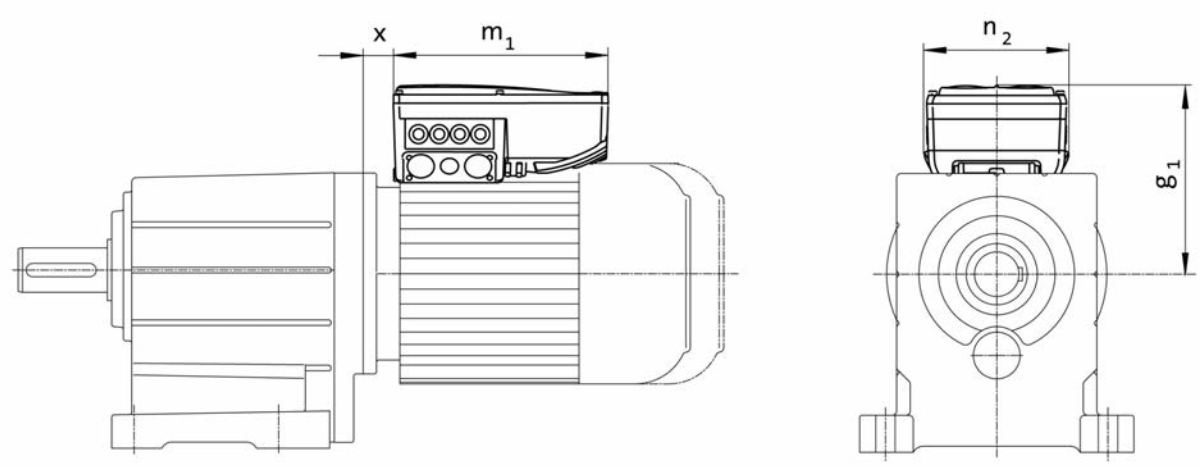

Product key					
Motor	Inverter				
		$g_{1,\ 87Hz}$	$m_{1,\ 87Hz}$	$n_{2,\ 87Hz}$	x_{87Hz}
		[mm]	[mm]	[mm]	[mm]
MD□□□□□063-32	E84DVB□3714S□□□2□	154	241	161	18.8
MD□□□□□063-42	E84DVB□5514S□□□2□				
MD□□□□□071-32	E84DVB□7514S□□□2□	163			21.0
MD□□□□□071-42	E84DVB□1124S□□□2□				
MH□□□□□080-32	E84DVB□1524S□□□2□	172			25.5
MH□□□□□090-12	E84DVB□2224S□□□2□	206	260	176	27.8
MH□□□□□090-32	E84DVB□3024S□□□2□				
MH□□□□□100-12	E84DVB□4024S□□□2□	272	325	195	17.1
MH□□□□□100-32	E84DVB□5524S□□□2□				
MH□□□□□112-22	E84DVB□7524S□□□2□	282			19.0



Spring-applied brake

Three-phase AC motors can be fitted with a spring-applied brake. This is activated after the supply voltage is switched off (closed-circuit principle). For optimum adjustment of the brake motor to the application, a range of braking torques and control modes is available for every motor frame size. For applications with very high operating frequencies the brake is also available in a LongLife version, with reinforced mechanical brake components.

Features

Versions
- **Standard**
  - 1 x 10^6 repeating switching cycles
  - 1 x 10^6 reversing switching cycles
- **LongLife**
  - 10 x 10^6 repeating switching cycles
  - 15 x 10^6 reversing switching cycles

Control
- DC supply
- AC supply via rectifier in the terminal box

Enclosure
- Without manual release IP55
- With manual release IP54

Friction lining
- Non-asbestos, low wearing

Options
- Manual release
- UL/CSA approval
- Noise-reduced

Assignment of 2-pole motors and brakes

Design	Standard		LongLife	
Motor frame size	Size	Rated torque	Size	Rated torque
	Brake		Brake	
		M_k		M_k
		[Nm]		[Nm]
063-11	06	2.50	06	2.50
063-31	06	4.00	06	4.00
071-11	06	2.50	06	4.00
071-31	06	4.00	08	3.50
	08	3.50		

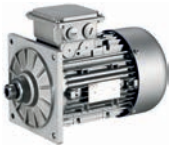

Spring-applied brake

Assignment of 4-pole motors and brakes

Design	Standard		LongLife	
Motor frame size	**Size**	**Rated torque**	**Size**	**Rated torque**
	Brake		Brake	
		M_k		M_k
		[Nm]		[Nm]
063-02 063-12 063-22 063-32 063-42	06 06	2.50 4.00	06	4.00
071-12 071-32	06 06 08	2.50 4.00 3.50	06 08	4.00 3.50
071-42	06 06 08 08	2.50 4.00 3.50 8.00	06 08 08	4.00 3.50 8.00
080-32	08 08 10	3.50 8.00 7.00	08 10	8.00 7.00
090-12 090-32	08 08 10 10 10	3.50 8.00 7.00 16.0 23.0	08 10 10	8.00 7.00 16.0
100-12	10 10 12 12	7.00 16.0 14.0 32.0	10 12 12	16.0 14.0 32.0
100-32	10 10 12 12 12	7.00 16.0 14.0 32.0 46.0		



Spring-applied brake

Assignment of 4-pole motors and brakes

Design	Standard		LongLife	
Motor frame size	**Size**	**Rated torque**	**Size**	**Rated torque**
	Brake		Brake	
		M_k		M_k
		[Nm]		[Nm]
112-22	12 12 14 14	14.0 32.0 35.0 60.0		
132-12	14 14 16 16	35.0 60.0 60.0 80.0		
132-22	14 14 16 16 16	35.0 60.0 60.0 80.0 100		
160-22	16 16 18 18	60.0 80.0 80.0 150		
160-32	18 18 18	80.0 150 200		
180-12	18 18 20 20	80.0 150 145 260		
180-32	18 18 20 20 20	80.0 150 145 260 315		
200-32	18 18 20 20 20 20	80.0 150 145 260 315 400		
225-12	25 25 25	265 400 490		
225-22	25 25 25 25	265 400 490 600		

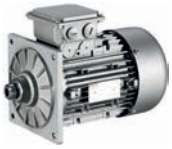

Spring-applied brake

Assignment of 6-pole motors and brakes

Design	Standard		LongLife	
Motor frame size	**Size**	**Rated torque**	**Size**	**Rated torque**
	Brake		Brake	
		M_k		M_k
		[Nm]		[Nm]
071-13 071-33	06 06 08	2.50 4.00 3.50	06 08	4.00 3.50
080-13 080-33	08 08 10	3.50 8.00 7.00	08 08 10	3.50 8.00 7.00



Spring-applied brake

Direct connection without rectifier

If the brake is activated directly without a rectifier, a freewheeling diode or a spark suppressor is required to protect against induction peaks.

- Supply voltages
  DC 24 V
  DC 180 V
  DC 205 V

Connection via mains voltage with brake rectifier

If the brake is not directly supplied with DC voltage, a rectifier is required. This is included in the scope of supply and is located in the terminal box of the motor. The rectifier converts the AC voltage of the connection into DC voltage. The following rectifiers are available:

Half-wave rectifier, 6-pole

- Ratio of supply voltage to brake coil voltage = 2.22
- Approved by UL/CSA
- Supply voltages
  AC 230 V
  AC 400 V
  AC 460 V



Bridge rectifier, 6-pole

- Ratio of supply voltage to brake coil voltage = 1.11
- Supply voltage
  AC 230 V



Bridge/half-wave rectifier, 6-pole

- Ratio of supply voltage to brake coil voltage
  up to overexcitation time = 1.11
  beyond overexcitation time = 2.22



Supply voltages:

- AC 230 V
- AC 400 V

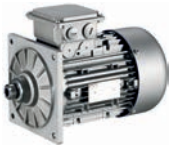

Spring-applied brake

Connection via mains voltage with brake rectifier

Bridge/half-wave rectifier, 6-pole
- Ratio of supply voltage to brake coil voltage
  up to overexcitation time = 1.11
  beyond overexcitation time = 2.22



Supply voltages:
- AC 230 V
- AC 400 V

During the switching operation the bridge/half-wave rectifier functions as a bridge rectifier for the overexcitation time $t_{ü}$ and then as a half-wave rectifier. This combination optimises the performance of the brake – depending on the assignment of brake coil voltage and supply voltage:

- **Short-time overexcitation of the brake coil**
  Activating the brake coil for the overexcitation time $t_{ü}$ with twice the rated voltage allows the disengagement time to be reduced. The brake opens more quickly and wear on the friction lining is reduced.
  These features make this activation version particularly suitable for lifting applications. It is therefore only available in combination with a brake with increased braking torque.
- **Holding current reduction (cold brake)**
  By reducing the holding current, the bridge/half-wave rectifier is able to reduce the power input to the open brake. As the brake heats up less, this type of activation is known as "cold brake".



Spring-applied brake

Permissible friction energy

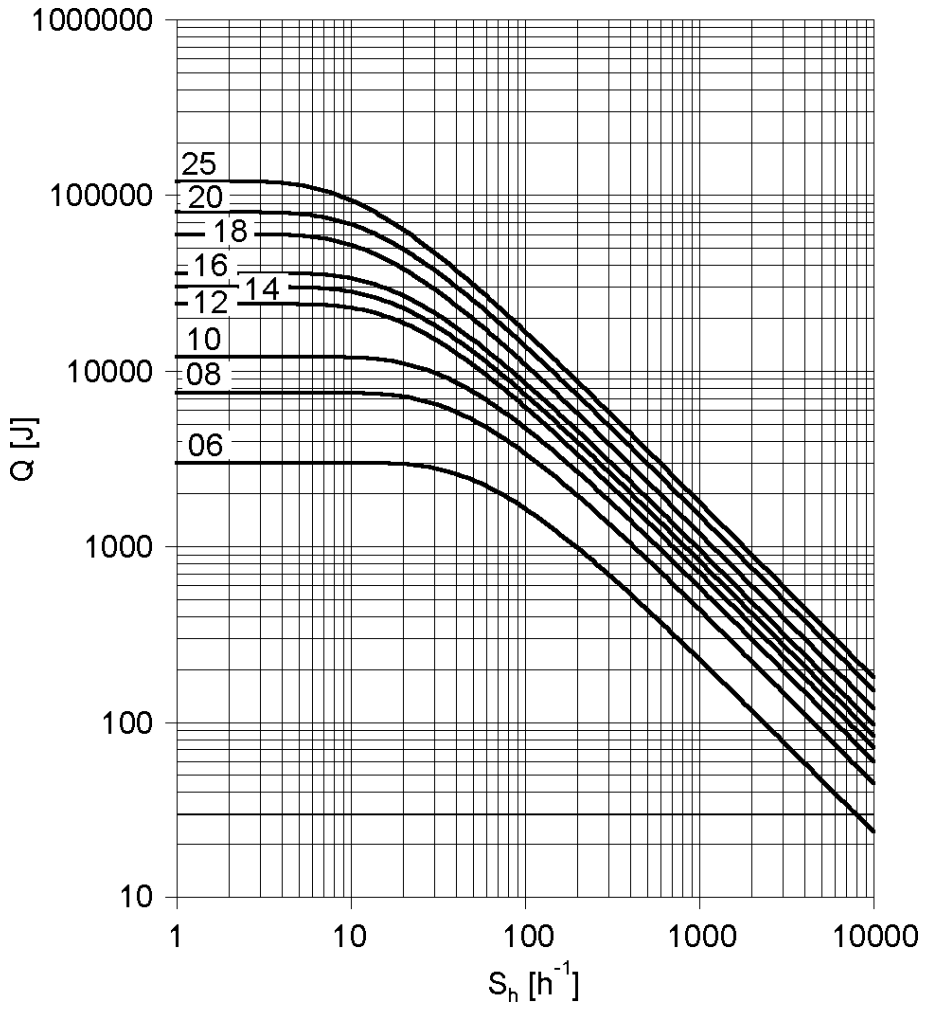

Q =Switching energy per switching cycle
S_h =Operating frequency
Brake size = 06 to 25

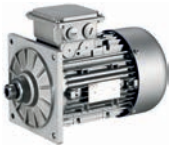

Spring-applied brake

Rated data with reduced braking torque

► Please enquire for braking torques and maximum switching work values not listed here.

Size			06	08	10	12	14	16	18	20	25
Power input											
	P_{in}	[kW]	0.020	0.025	0.030	0.040	0.050	0.055	0.085	0.10	0.11
Braking torque											
100	M_B	[Nm]	2.50	3.50	7.00	14.0	35.0	60.0	80.0	145	265
1000	M_B	[Nm]	2.30	3.10	6.10	12.0	30.0	50.0	65.0	115	203
1200	M_B	[Nm]	2.30	3.10	6.00	12.0	29.0	48.0	63.0	112	199
1500	M_B	[Nm]	2.20	3.00	5.80	11.0	28.0	47.0	61.0	109 [1)]	193 [1)]
1800	M_B	[Nm]	2.10	2.90	5.70	11.0	28.0	46.0	60.0 [1)]		
3000	M_B	[Nm]	2.00	2.80	5.30	10.0	26.0 [1)]	43.0 [1)]			
3600	M_B	[Nm]	2.00	2.70	5.20	10.0 [1)]					
Maximum switching energy											
100	Q_E	[KJ]	3.00	7.50	12.0	24.0	30.0	36.0	60.0	80.0	120
1000	Q_E	[KJ]	3.00	7.50	12.0	24.0	30.0	36.0	60.0	80.0	120
1200	Q_E	[KJ]	3.00	7.50	12.0	24.0	30.0	36.0	60.0	80.0	120
1500	Q_E	[KJ]	3.00	7.50	12.0	24.0	30.0	36.0	60.0	24.0 [1)]	36.0 [1)]
1800	Q_E	[KJ]	3.00	7.50	12.0	24.0	30.0	36.0	36.0 [1)]		
3000	Q_E	[KJ]	3.00	7.50	12.0	24.0	18.0 [1)]	11.0 [1)]			
3600	Q_E	[KJ]	3.00	7.50	12.0	7.00 [1)]					
Transition operating frequency											
	$S_{hü}$	[1/h]	79.0	50.0	40.0	30.0	28.0	27.0	20.0	19.0	15.0
Moment of inertia											
	J	[kgcm²]	0.015	0.061	0.20	0.45	0.63	1.50	2.90	7.30	20.0
Mass											
	m	[kg]	0.90	1.50	2.60	4.20	5.80	8.70	12.6	19.5	31.0

[1)] In the region of the load limit the value for friction energy Q_{BW} can be reduced to 40 %.

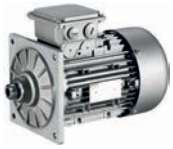

Spring-applied brake

Rated data with reduced braking torque

► Activation via half-wave or bridge rectifier

Size			06	08	10	12	14	16	18	20	25
Friction energy											
	Q_{BW}	[MJ]	113	210	264	706	761	966	1542	2322	3522
Delay time											
Engaging	t_{11}	[ms]	11.0	14.0	20.0	21.0	37.0	53.0	32.0	47.0	264
Rise time											
Braking torque	t_{12}	[ms]	13.0	10.0	17.0	19.0	22.0	30.0	20.0	100	120
Engagement time											
	t_1	[ms]	24.0		37.0	40.0	59.0	83.0	52.0	147	384
Disengagement time											
	t_2	[ms]	35.0	37.0	57.0	65.0	148	169	230	207	269

► Activation via bridge/half-wave rectifier

Design			Holding current reduction (cold brake)								
Size			06	08	10	12	14	16	18	20	25
Friction energy											
	Q_{BW}	[MJ]	113	210	264	706	761	966	1542	2322	3522
Overexcitation time											
	$t_ü$	[ms]	300				1300				
Min. rest time											
	t	[ms]	900				3900				
Delay time											
Engaging	t_{11}	[ms]	12.0	22.0	35.0	49.0	61.0	114	83.0	126	304
Rise time											
Braking torque	t_{12}	[ms]	14.0	16.0	30.0	45.0	37.0	65.0	52.0	269	138
Engagement time											
	t_1	[ms]	26.0	38.0	66.0	93.0	97.0	180	134	395	443
Disengagement time											
	t_2	[ms]	35.0	37.0	57.0	65.0	148	169	230	207	269

► The brake response and application times are guide values. The engagement time is 10 times longer with AC-side switching. With the maximum air gap the disengagement time t_2 – depending on the brake and control – is up to 4 times longer than the disengagement time with the rated air gap.

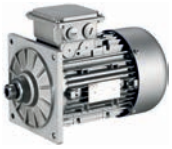

Spring-applied brake

Rated data with standard braking torque

► Please enquire for braking torques and maximum switching work values not listed here.

Size			06	08	10	12	14	16	18	20	25
Power input											
	P_{in}	[kW]	0.020	0.025	0.030	0.040	0.050	0.055	0.085	0.10	0.11
Braking torque											
100	M_B	[Nm]	4.00	8.00	16.0	32.0	60.0	80.0	150	260	400
1000	M_B	[Nm]	3.70	7.20	14.0	27.0	51.0	66.0	121	206	307
1200	M_B	[Nm]	3.60	7.00	14.0	27.0	50.0	65.0	118	201	300
1500	M_B	[Nm]	3.50	6.80	13.0	26.0	48.0	63.0	115	195 [1)]	291 [1)]
1800	M_B	[Nm]	3.40	6.70	13.0	26.0	47.0	61.0	112 [1)]		
3000	M_B	[Nm]	3.20	6.30	12.0	24.0	44.0 [1)]	57.0 [1)]			
3600	M_B	[Nm]	3.20	6.10	12.0	23.0 [1)]					
Maximum switching energy											
100	Q_E	[KJ]	3.00	7.50	12.0	24.0	30.0	36.0	60.0	80.0	120
1000	Q_E	[KJ]	3.00	7.50	12.0	24.0	30.0	36.0	60.0	80.0	120
1200	Q_E	[KJ]	3.00	7.50	12.0	24.0	30.0	36.0	60.0	80.0	120
1500	Q_E	[KJ]	3.00	7.50	12.0	24.0	30.0	36.0	60.0	24.0 [1)]	36.0 [1)]
1800	Q_E	[KJ]	3.00	7.50	12.0	24.0	30.0	36.0	36.0 [1)]		
3000	Q_E	[KJ]	3.00	7.50	12.0	24.0	18.0 [1)]	11.0 [1)]			
3600	Q_E	[KJ]	3.00	7.50	12.0	7.00 [1)]					
Transition operating frequency											
	$S_{hü}$	[1/h]	79.0	50.0	40.0	30.0	28.0	27.0	20.0	19.0	15.0
Moment of inertia											
	J	[kgcm²]	0.015	0.061	0.20	0.45	0.63	1.50	2.90	7.30	20.0
Mass											
	m	[kg]	0.90	1.50	2.60	4.20	5.80	8.70	12.6	19.5	31.0

[1)] In the region of the load limit the value for friction energy Q_{BW} can be reduced to 40 %.



Spring-applied brake

Rated data with standard braking torque

► Activation via half-wave or bridge rectifier

Size			06	08	10	12	14	16	18	20	25
Friction energy											
	Q_{BW}	[MJ]	85.0	158	264	530	571	966	1542	2322	3522
Delay time											
Engaging	t_{11}	[ms]	15.0		28.0		17.0	27.0	33.0	65.0	110
Rise time											
Braking torque	t_{12}	[ms]	13.0	16.0	19.0	25.0		30.0	45.0	100	120
Engagement time											
	t_1	[ms]	28.0	31.0	47.0	53.0	42.0	57.0	78.0	165	230
Disengagement time											
	t_2	[ms]	45.0	57.0	76.0	115	210	220	270	340	390

► Activation via bridge/half-wave rectifier

Design			Holding current reduction (cold brake)								
Size			06	08	10	12	14	16	18	20	25
Friction energy											
	Q_{BW}	[MJ]	85.0	158	264	530	571	966	1542	2322	3522
Overexcitation time											
	$t_{ü}$	[ms]	300				1300				
Min. rest time											
	t	[ms]	900				3900				
Delay time											
Engaging	t_{11}	[ms]	16.0	25.0	31.0	48.0	33.0	58.0	80.0	102	154
Rise time											
Braking torque	t_{12}	[ms]	14.0	27.0	21.0	43.0	49.0	64.0	109	157	168
Engagement time											
	t_1	[ms]	30.0	52.0		90.0	82.0	122	189	259	322
Disengagement time											
	t_2	[ms]	45.0	57.0	76.0	115	210	220	270	340	390

► The brake response and application times are guide values. The engagement time is 10 times longer with AC-side switching. With the maximum air gap the disengagement time t_2 – depending on the brake and control – is up to 4 times longer than the disengagement time with the rated air gap.

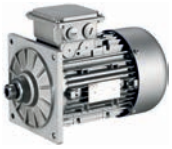

Spring-applied brake

Rated data with increased braking torque

► Please enquire for braking torques and maximum switching work values not listed here.

Size			10	12	14	16	16	18	20	20	25	25
Power input												
	P_{in}	[kW]	0.030	0.040	0.050	0.055	0.055	0.085	0.10	0.10	0.11	0.11
Braking torque												
100	M_B	[Nm]	23.0	46.0	75.0	100	125	200	315	400	490	600
1000	M_B	[Nm]	20.0	39.0	64.0	83.0	103	162	249	317	376	461
1200	M_B	[Nm]	20.0	39.0	62.0	81.0	101	158	244	309	367	449
1500	M_B	[Nm]	19.0	38.0	60.0	78.0	98.0	153	237 [1]	300 [1]	356 [1]	436 [1]
1800	M_B	[Nm]	19.0	37.0	59.0	77.0	96.0	150 [1]				
3000	M_B	[Nm]	17.0	34.0	55.0 [1]	71.0 [1]	89.0 [1]					
3600	M_B	[Nm]	17.0	33.0 [1]								
Maximum switching energy												
100	Q_E	[KJ]	12.0	24.0	30.0	36.0	36.0	60.0	80.0	80.0	120	120
1000	Q_E	[KJ]	12.0	24.0	30.0	36.0	36.0	60.0	80.0	80.0	120	120
1200	Q_E	[KJ]	12.0	24.0	30.0	36.0	36.0	60.0	80.0	80.0	120	120
1500	Q_E	[KJ]	12.0	24.0	30.0	36.0	36.0	60.0	24.0 [1]	24.0 [1]	36.0 [1]	36.0 [1]
1800	Q_E	[KJ]	12.0	24.0	30.0	36.0	36.0	36.0 [1]				
3000	Q_E	[KJ]	12.0	24.0	18.0 [1]	11.0 [1]	11.0 [1]					
3600	Q_E	[KJ]	12.0	7.00 [1]								
Transition operating frequency												
	$S_{hü}$	[1/h]	40.0	30.0	28.0	27.0	27.0	20.0	19.0	19.0	15.0	15.0
Moment of inertia												
	J	[kgcm²]	0.20	0.45	0.63	1.50	1.50	2.90	7.30	7.30	20.0	20.0
Mass												
	m	[kg]	2.60	4.20	5.80	8.70	8.70	12.6	19.5	19.5	31.0	31.0

[1] In the region of the load limit the value for friction energy Q_{BW} can be reduced to 40 %.

► Activation via half-wave or bridge rectifier

Size			10	12	14	16		18	20		25	
Friction energy												
	Q_{BW}	[MJ]	198	353	253	563	241	578	1596	580	2465	1409
Delay time												
Engaging	t_{11}	[ms]	10.0	16.0	11.0	22.0	17.0	24.0	46.0	17.0	77.0	38.0
Rise time												
Braking torque	t_{12}	[ms]	19.0	25.0		30.0		45.0	100		120	
Engagement time												
	t_1	[ms]	29.0	41.0	36.0	52.0	47.0	69.0	146	117	197	158
Disengagement time												
	t_2	[ms]	109	193	308	297	435	356	378	470	451	532



Spring-applied brake

Rated data with increased braking torque

► Activation via bridge/half-wave rectifier

Design			Holding current reduction (cold brake)									
Size			10	12	14	16		18	20		25	
Friction energy												
	Q_{BW}	[MJ]	198	353	253	563	241	578	1596	580	2465	1409
Overexcitation time												
	$t_ü$	[ms]	300			1300						
Min. rest time												
	t	[ms]	900			3900						
Delay time												
Engaging	t_{11}	[ms]	24.0	27.0	17.0	41.0	21.0	60.0	69.0	17.0	123	85.0
Rise time												
Braking torque	t_{12}	[ms]	44.0	43.0	37.0	55.0	37.0	113	148	100	190	270
Engagement time												
	t_1	[ms]	68.0	70.0	54.0	97.0	57.0	173	217	334	313	355
Disengagement time												
	t_2	[ms]	109	193	308	297	435	356	378	470	451	532

Design			Over-excitation									
Size			10	12	14	16		18	20		25	
Friction energy												
	Q_{BW}	[MJ]	264	706	761	966		1542	2322		3522	
Overexcitation time												
	$t_ü$	[ms]	300			1300						
Min. rest time												
	t	[ms]	900			3900						
Delay time												
Engaging	t_{11}	[ms]	29.0	54.0	31.0	70.0	46.0	86.0	103	55.0	171	135
Rise time												
Braking torque	t_{12}	[ms]	53.0	87.0	68.0	93.0	83.0	160	222	319	266	430
Engagement time												
	t_1	[ms]	82.0	141	99.0	163	129	246	325	374	437	565
Disengagement time												
	t_2	[ms]	53.0	81.0	117	141	168	151	160	167	184	204

► The brake response and application times are guide values. The engagement time is 10 times longer with AC-side switching. With the maximum air gap the disengagement time t_2 – depending on the brake and control – is up to 4 times longer than the disengagement time with the rated air gap.

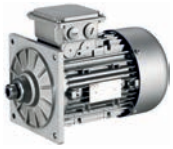

Spring-applied brake

Manual release lever

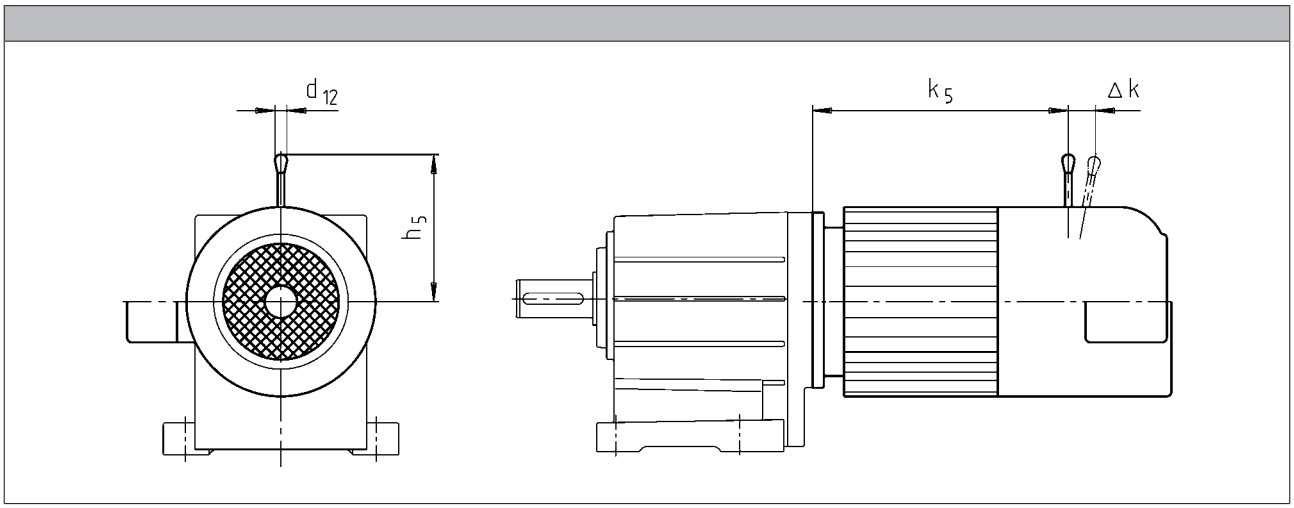

Motor frame size			Size				
			Brake				
				k_5	Δ k	h_5	d_{12}
				[mm]	[mm]	[mm]	[mm]
	063-02 063-22		06	185	29	107	13.0
063-11 063-31	063-12 063-32 063-42		06	173	29	107	13.0
071-11 071-31	071-32 071-42	071-13 071-33	06 08	186 187	29 27	107 116	13.0 13.0
	080-32	080-13 080-33	06 08	207 218	29 27	107 116	13.0 13.0
	090-12 090-32		08 10	245 256	27 28	116 132	13.0 13.0
	100-12		10 12	279 281	28 37	132 161	13.0 13.0
	100-32		10 12	294 296	28 37	132 161	13.0 13.0
	112-22		12 14	292 296	37 41	161 195	13.0 24.0
	132-12 132-22		14 16	373 373	41 55	195 240	24.0 24.0
	160-22		16 18	420 423	59 55	279 240	24.0 24.0
	160-32		16 18	464 467	55 59	240 279	24.0 24.0
	180-12 180-32		18 20	539 546	59 74	279 319	24.0 24.0
	180-42		18 20	596 603	59 74	279 319	24.0 24.0
	225-12 225-22		25 25	785 785	103 103	445 445	24.0 24.0

The following combinations with manual release lever and motor connection in the same position are not possible:
- HAN connector with connection in position 1
- Inverter motec
- Terminal box of motor sizes 071, 080, 090 for brake and retracting (M□□MA BR/BS/BA/BI)

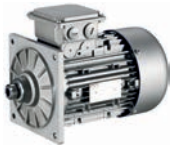

Resolver

Stator-fed resolver with two stator windings offset by 90° and one rotor winding with transformer winding.

► The three-phase AC motors with resolver cannot be used for speed-dependent safety functions in connection with the SM 301 safety module.

Product key				
				RS1
Accuracy				
			[']	-10 ... 10
Absolute positioning				
				1 revolution
Max. input voltage				
DC	$U_{in,max}$		[V]	10.0
Max. input frequency				
	$f_{in,max}$		[kHz]	4.00
Ratio				
Stator / rotor		± 5 %		0.30
Rotor impedance				
	Z_{ro}		[Ω]	51 + j90
Stator impedance				
	Z_{so}		[Ω]	102 + j150
Impedance				
	Z_{rs}		[Ω]	44 + j76
Min. insulation resistance				
At DC 500 V	R		[MΩ]	10.0
Number of pole pairs				
				1

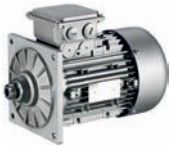

Incremental encoder and SinCos absolute value encoder

► The three-phase AC motors with incremental encoders or SinCos absolute value encoders cannot be used for speed-dependent safety functions in connection with the SM 301 safety module.

Encoder type			HTL incremental				TTL incremental			SinCos absolute value
Product key			IG128-24V-H	IG512-24V-H	IG1024-24V-H	IG2048-24V-H	IG512-5V-T	IG1024-5V-T	IG2048-5V-T	AM1024-8V-H
Encoder type										Multi-turn
Pulses			128	512	1024	2048	512	1024	2048	1024
Output signals			HTL				TTL			1 Vss
Interfaces			A, B track	A, B, N track and inverted						Hiperface
Absolute revolutions			0							4096
Accuracy		[']	-22.5 ... 22.5	-2 ... 2						-0.8 ... 0.8
Min. input voltage										
DC	$U_{in,min}$	[V]	8.00				4.75			7.00
Max. input voltage										
DC	$U_{in,max}$	[V]	26.0	30.0			5.25			12.0
Max. current consumption										
	I_{max}	[A]	0.040	0.15						0.080
Limit frequency										
	f_{max}	[kHz]	30.0	160			300			200
Inverter assignment			E84AVSC E84AVHC	E84AVHC			E84AVTC E94A ECS EVS93			

Inverters
- Inverter Drives 8400 StateLine (E84AVSC)
- Inverter Drives 8400 HighLine (E84AVHC)
- Inverter Drives 8400 TopLine (E84AVTC)

Servo-Inverters
- Servo Drives 9400 (E94A)
- 9300 servo inverters (EVS93)
- Servo Drives ECS



Blowers

► The use of a blower enables operation below 20 Hz without torque derating.

Rated data for 50 Hz

Size	Number of phases	Connection method					
Motor							
			U_{min}	U_{max}	P_{max}	I_{max}	m
			[V]	[V]	[kW]	[A]	[kg]
063	1		230	277	0.027	0.11	2.00
	3	Δ	200	303	0.028	0.12	
		Y	346	525		0.070	
071	1		230	277	0.027	0.10	2.10
	3	Δ	200	303	0.031	0.11	
		Y	346	525		0.060	
080	1		230	277	0.029	0.11	2.30
	3	Δ	200	303	0.031		
		Y	346	525		0.060	
090	1		220	277	0.065	0.29	2.70
	3	Δ	200	303	0.091	0.38	
		Y	346	525		0.22	
100	1		220	277	0.066	0.28	3.00
	3	Δ	200	303	0.091	0.37	
		Y	346	525		0.22	
112	1		220	277	0.071	0.28	3.10
	3	Δ	200	303	0.097	0.35	
		Y	346	525		0.20	
132	1		230	277	0.098	0.40	4.20
	3	Δ	200	303	0.12	0.58	
		Y	346	525		0.33	
160	1		230	277	0.25	0.97	6.20
	3	Δ	200	303		0.87	
		Y	346	525		0.50	
180	1		230	277		0.97	8.00
	3	Δ	200	303		0.87	
		Y	346	525		0.50	

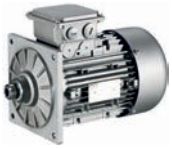

Blowers

Rated data for 50 Hz

Size	Number of phases	Connection method					
Motor							
			U_{min}	U_{max}	P_{max}	I_{max}	m
			[V]	[V]	[kW]	[A]	[kg]
200	1		230	277	0.25	0.97	8.00
	3	Δ	200	303		0.87	
		Y	346	525		0.50	
225		Δ	200	400	0.28	1.10	15.0
		Y	346	525	0.17	0.35	

Rated data for 60 Hz

Size	Number of phases	Connection method					
Motor							
			U_{min}	U_{max}	P_{max}	I_{max}	m
			[V]	[V]	[kW]	[A]	[kg]
063	1		230	277	0.032	0.12	2.00
	3	Δ	220	332	0.028	0.10	
		Y	380	575		0.060	
071	1		230	277	0.033	0.12	2.10
	3	Δ	220	332	0.029	0.10	
		Y	380	575		0.060	
080	1		230	277	0.037	0.14	2.30
	3	Δ	220	332	0.034	0.10	
		Y	380	575		0.060	
090	1		220	277	0.065	0.25	2.70
	3	Δ		332	0.077	0.33	
		Y	380	575		0.19	
100	1		220	277	0.075	0.30	3.00
	3	Δ		332	0.087	0.31	
		Y	380	575		0.18	
112	1		220	277	0.094	0.37	3.10
	3	Δ		332	0.10	0.31	
		Y	380	575		0.18	
132	1		230	277	0.15	0.57	4.20
	3	Δ	220	332		0.44	
		Y	380	575		0.25	
160		Δ	220	332	0.36	0.93	6.20
		Y	380	575		0.56	
180		Δ	220	332		0.93	8.00
		Y	380	575		0.56	
200		Δ	220	332		0.93	
		Y	380	575		0.56	
225		Δ	220	400	0.28	0.76	15.0
		Y	380	575	0.26	0.43	



Temperature monitoring

► The thermal sensors are integrated in the windings. The use of an additional motor protection switch is recommended.

TKO thermal contacts

Function	Operating temperature	Min. reset temperature	Max. reset temperature	Max. input current	Max. input voltage
					AC
	T	T_{min}	T_{max}	$I_{in,max}$	$U_{in,max}$
	-5 ... 5				
	[°C]	[°C]	[°C]	[A]	[V]
NC contact	150	90.0	135	2.50	250

PTC thermistor

Function	Operating temperature	Rated resistance			Standard
		155 °C	-20 °C	140 °C	
	T	R_N	R_N	R_N	
	-5 ... 5				
	[°C]	[Ω]	[Ω]	[Ω]	
Sudden change in resistance	150	550	30.0	250	DIN 44080 DIN VDE 0660 Part 303

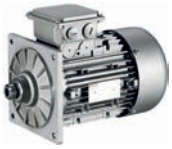

Temperature monitoring

KTY temperature sensor

	Function	Rated resistance			Max. input current	
		25 °C	150 °C	170 °C	25 °C	170 °C
		R_N	R_N	R_N	$I_{in,max}$	$I_{in,max}$
		[Ω]	[Ω]	[Ω]	[A]	[A]
KTY83-110	Continuous resistance change	1000	2225	2471	0.010	0.002
KTY84-130	Continuous resistance change	603	1334	1482	0.010	0.002

Variation of resistance

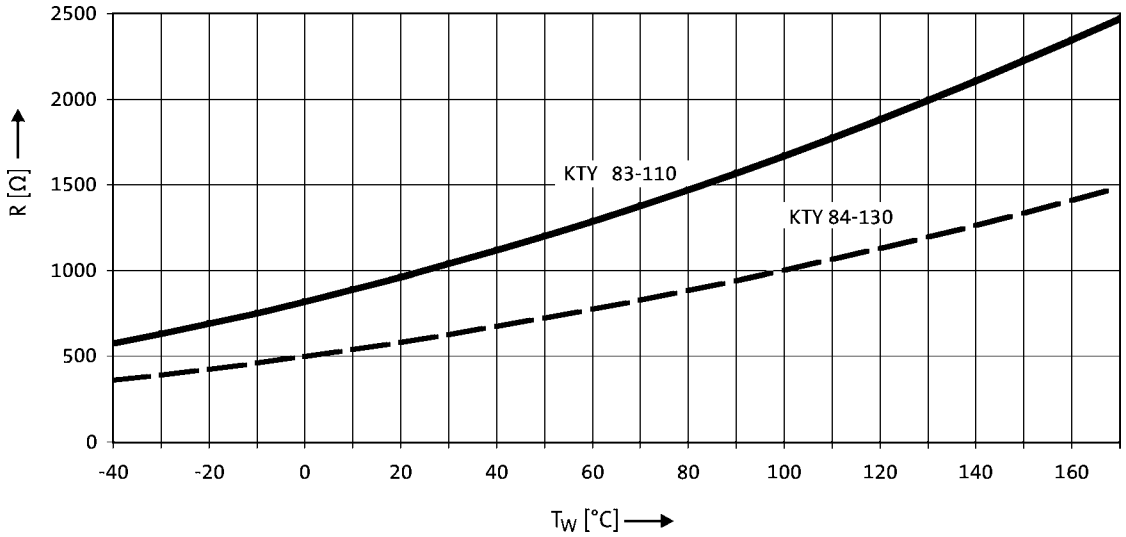

► If the detector is supplied with a measured current of 1 mA, the above relationship between the temperature and the resistance applies.



Terminal box

The three-phase AC motors are designed for operation at a constant mains frequency and with an inverter.
For 50 Hz operation, the motors are operated in Δconfiguration at 230 V or in star configuration at 400 V.
For inverter operation, the base frequency has been specified as 87 Hz at a rated voltage of 400 V in Δconfiguration.

In the standard version, the motors are connected in the terminal box. As an option, the motors are also available with the connectors described on the following pages as long as the permissible ratings are not exceeded.

Motor terminal box - built-on accessories assignment: 4-pole / 6-pole motors

Motor type	M□□MAXX	M□□MARS M□□MAIG M□□MAAG	M□□MAZE M□□MAHA	M□□MALL	M□□MALZ M□□MALH
Motor frame size					
	Terminal box				
063-02 063-22	KK1	KK2			
063-12 063-32 063-42	KK1	KK2			
071-32 071-42 071-13 071-33	KK1	KK2	KK2	KK1	KK1
080-13 080-32 080-33 080-42	KK1	KK2	KK2	KK1	KK1
090-12 090-32	KK1	KK2	KK2	KK1	KK1
100-12 100-32	KK1	KK2	KK2	KK2	KK2
112-22 112-32	KK1	KK2	KK2	KK1	KK1
132-12 132-22 132-32	KK1	KK3	KK3	KK1	KK1
160-22 160-32	KK3	KK3			
180-12 180-32 180-42 180-42	KK3	KK3			
225-12 225-22	KK3	KK3			

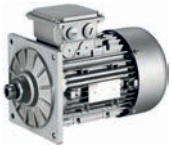

Terminal box

Motor terminal box - built-on accessories assignment: 4-pole / 6-pole motors

Motor type	M□□MABR	M□□MABS M□□MABI M□□MABA	M□□MABZ M□□MABH	M□□MABL
Motor frame size				
	Terminal box			
063-02 063-22	KK2	KK3		
063-12 063-32 063-42	KK2	KK3		
071-32 071-42 071-13 071-33	KK2	KK3	KK2	KK2
080-13 080-32 080-33 080-42	KK2	KK3	KK2	KK2
090-12 090-32	KK2	KK3	KK2	KK2
100-12 100-32	KK2	KK3	KK2	KK2
112-22 112-32	KK2	KK3	KK2	KK2
132-12 132-22 132-32	KK3	KK3	KK3	KK3
160-22 160-32	KK3	KK3		
180-12 180-32 180-42	KK3	KK3		
225-12 225-22	KK3	KK3		



Terminal box

Motor terminal box - built-on accessories assignment: 2-pole motors

Motor type	M□□MAXX	M□□MAZE	M□□MALL	M□□MALZ
Motor frame size				
	Terminal box			
063-11 063-31	KK1			
071-11 071-31	KK1	KK2	KK1	KK2
080-11 080-31	KK1	KK2	KK1	KK2
090-31 090-11	KK1	KK2	KK1	KK2
100-31 100-41	KK1	KK2	KK1	KK2
112-31 112-41	KK1	KK2	KK1	KK2
132-21	KK1	KK3	KK1	KK3

Motor type	MD□MABR	MD□MABZ	MD□MABL
Motor frame size			
	Terminal box		
063-11 063-31	KK2		
071-11 071-31	KK2	KK2	
080-11 080-31	KK2	KK2	KK2
090-31 090-11	KK2	KK2	KK2
100-31 100-41	KK2	KK2	KK2
112-31 112-41	KK2	KK2	KK2
132-21	KK3	KK3	KK3

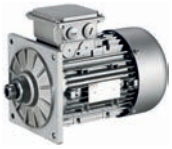

Terminal box

Dimensions of KK1

- ► For motors with motor terminal box KK1, the connector position can be selected in accordance with the terminal box position.
- ► If preferred positions are not specified in the order, the cable entry will be positioned as circled on the diagram below.

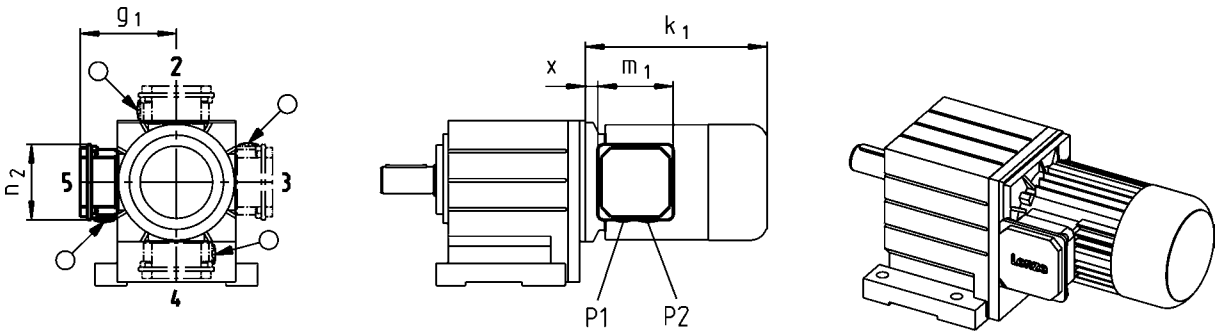

Size						
Motor						
	x	g_1	m_1	n_2	P_1	P_2
	[mm]	[mm]	[mm]	[mm]	[mm]	[mm]
063	21 12 [1)]	100 117 [1)]	75.0 93.0 [1)]	75.0 93.0 [1)]	M16x1.5 M20x1.5 [1)]	M20x1.5 M20x1.5
071	24 15 [1)]	109 126 [1)]				
080	14	150	115	115	M20x1.5	M25x1.5
090	19	157				
100	20	166				
112	22	176				
132	33	195	122	122	M32x1.5	M32x1.5

[1)] UL/CSA approval: cURus

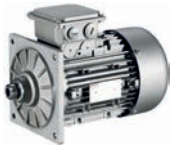

Terminal box

Cable entry position when using KK1

Terminal box in position 2

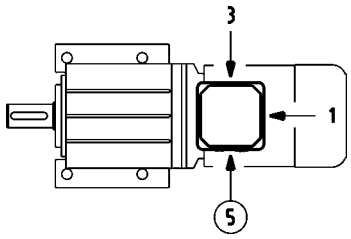

Terminal box in position 3

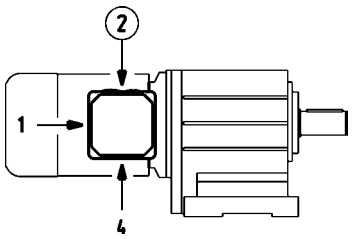

Terminal box in position 4

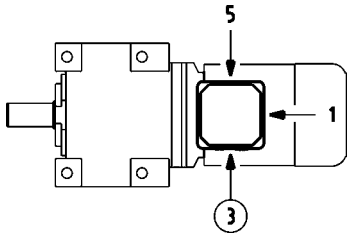

Terminal box in position 5

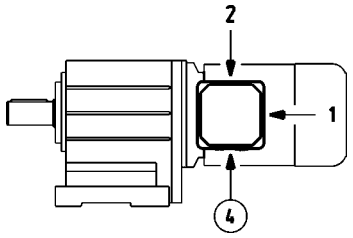

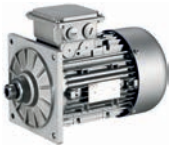

Terminal box

Dimensions of KK2

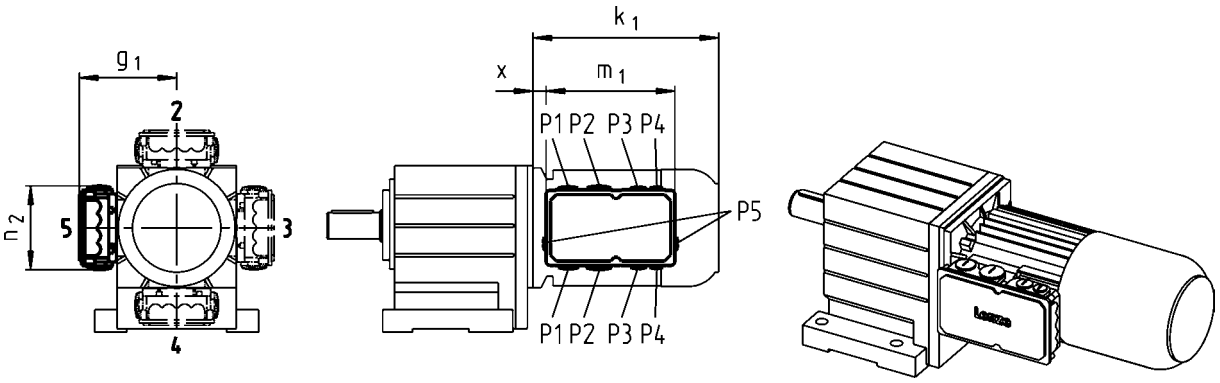

Size						
Motor						
	x	g_1	m_1	n_2	P_1	P_2
	[mm]	[mm]	[mm]	[mm]	[mm]	[mm]
063	13	107	136	103	M16x1.5	M20x1.5
071	15	118				
080	17	132	152	121	M20x1.5	M25x1.5
090	22	137				
100	23	147				
112	25	158				



Terminal box

Dimensions of KK3

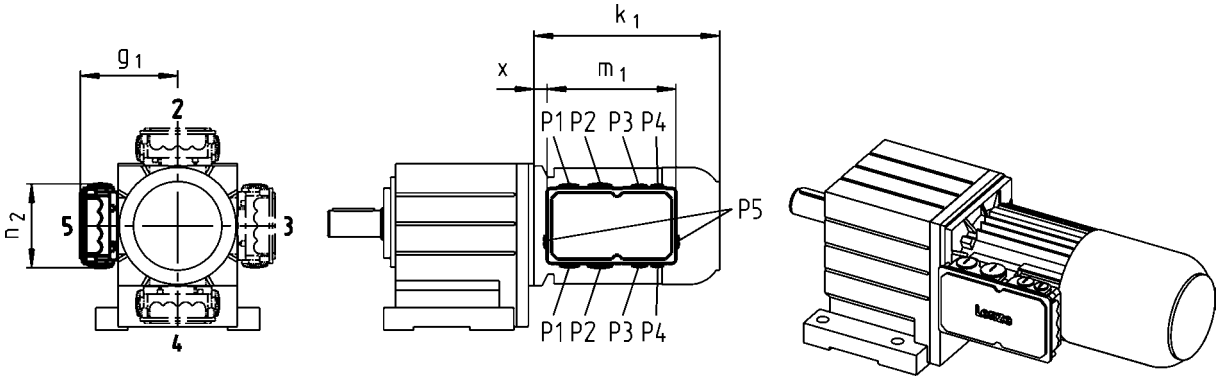

Size									
Motor									
	x	g_1	m_1	n_2	P_1	P_2	P_3	P_4	P_5
	[mm]	[mm]	[mm]	[mm]	[mm]	[mm]	[mm]	[mm]	[mm]
063	2	124	195	125	M25x1.5	M32x1.5	M20x1.5	M20x1.5	
071	5	133							
080	15	142							
090	20	147							
100	21	158							
112	23	168							
132	38	187							
160	35	210	226	127	M50x1.5	M16x1.5		M16x1.5	
180	73	230							
225	95	346	354	205		M63x1.5 [1)]	M50x1.5 [1)]		M16x1.5

[1)] Cable entry only possible at one position.
Terminal box position 2: cable entry at position 5.
Terminal box position 3: cable entry at position 2.
Terminal box position 4: cable entry at position 3.
Terminal box position 5: cable entry at position 4.

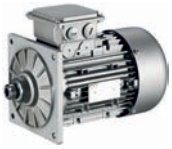

Plug connectors

ICN, HAN and M12 connectors (only for IG128-24V-H incremental encoder) are available for the three-phase AC motors.

ICN connector

A connector is used for power, brake and temperature monitoring. The connections to the feedback system and the blower each employ a separate connector.

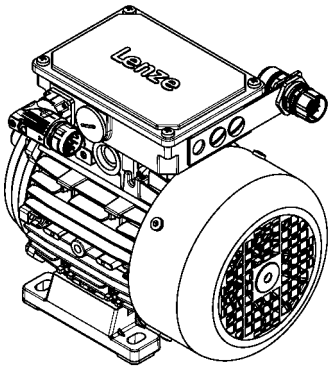

Connection for power, brake and temperature monitoring

The connectors can be rotated through 270° and are fitted with a bayonet catch for SpeedTec connectors. As this connector is also compatible with conventional union nuts, existing mating connectors can continue to be used without difficulty. The motor connection is determined in the terminal box and must be checked before commissioning.

► ICN 6-pole

Pin assignment			
Contact	Designation	Meaning	
1	BD1 / BA1	Brake +/AC	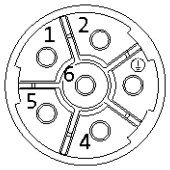
2	BD2 / BA2	Brake /AC	
PE	PE	PE conductor	
4	U	Phase U power	
5	V	Phase V power	
6	W	Phase W power	

► ICN 8-pole

Pin assignment			
Contact	Designation	Meaning	
1	U	Phase U power	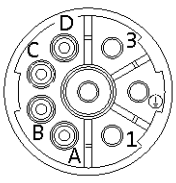
PE	PE	PE conductor	
3	V	Phase V power	
4	W	Phase W power	
A	TB1 / TP1 / R1	Thermal sensor: TKO/PTC/ +KTY	
B	TB2 / TP2 / R2	Thermal sensor: TKO/PTC/-KTY	
C	BD1 / BA1	Brake +/AC	
D	BD2 / BA2	Brake /AC	

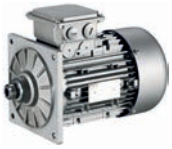

ICN connector

Feedback connection

All encoder systems (apart from IG128-24V-H) are also available with an ICN connector fixed to the motor terminal box for exceptionally fast commissioning. The connectors are fitted with a bayonet fixing, which is also compatible with conventional union nuts. Existing mating connectors can therefore continue to be used without difficulty.

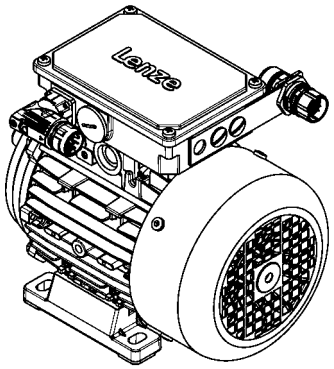

► Resolver

Pin assignment			
Contact	Designation	Meaning	
1	+Ref	Transformer windings	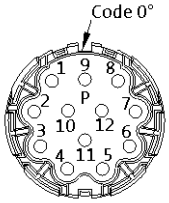
2	-Ref		
3	+VCC ETS	Supply: Electronic nameplate	
4	+COS	Cosine stator windings	
5	-COS		
6	+SIN	Sine stator windings	
7	-SIN		
8		Not assigned	
9			
10			
11	+KTY	KTY temperature sensor	
12	-KTY		

► Hiperface incremental encoder and SinCos absolute value encoder

Pin assignment			
Contact	Designation	Meaning	
1	B	Track B/+SIN	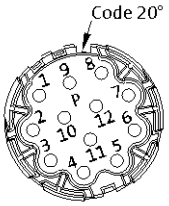
2	A^-	Track A inverse/-COS	
3	A	Track A/+COS	
4	$+U_B$	Supply +	
5	GND	Mass	
6	Z^-	Zero track inverse/-RS485	
7	Z	Zero track/+RS485	
8		Not assigned	
9	B^-	Track B inverse/-SIN	
10		Not assigned	
11	+KTY	KTY temperature sensor	
12	-KTY		

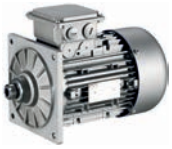

ICN connector

Motor terminal box with ICN connectors - built-on accessories assignment: 2-pole motors

Motor type	M□□MAXX	M□□MAZE	M□□MALL	M□□MALZ
Motor frame size				
	Terminal box with ICN connector			
063-11 063-31	KK1			
071-11 071-31	KK1	KK2	KK1	KK2
080-11 080-31	KK1	KK2	KK1	KK2
090-31 090-11	KK1	KK2	KK1	KK2
100-31 100-41	KK1	KK2	KK1	KK2
112-31 112-41	KK1	KK2	KK1	KK2
132-21	KK1	KK3	KK1	KK3

Motor type	M□□MABR	M□□MABZ	M□□MABL
Motor frame size			
	Terminal box with ICN connector		
063-11 063-31	KK2		
071-11 071-31	KK2	KK2	
080-11 080-31	KK2	KK2	KK2
090-31 090-11	KK2	KK2	KK2
100-31 100-41	KK2	KK2	KK2
112-31 112-41	KK2	KK2	KK2
132-21	KK3	KK3	KK3



ICN connector

Motor terminal box with ICN connectors - built-on accessories assignment: 4-pole / 6-pole motors

Motor type	M□□MAXX	M□□MARS M□□MAIG M□□MAAG	M□□MAZE M□□MAHA	M□□MALL	M□□MALZ M□□MALH
Motor frame size	Terminal box with ICN connector				
063-02 063-22	KK1	KK2			
063-12 063-32 063-42	KK1	KK2			
071-32 071-42 071-13 071-33	KK1	KK2	KK2	KK1	KK1
080-13 080-32 080-33 080-42	KK1	KK2	KK2	KK1	KK1
090-12 090-32	KK1	KK2	KK2	KK1	KK1
100-12 100-32	KK1	KK2	KK2	KK2	KK2
112-22 112-32	KK1	KK2	KK2	KK1	KK1
132-12 132-22 132-32	KK1	KK3	KK3	KK1	KK1

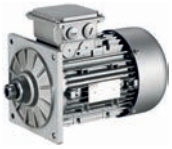

ICN connector

Motor terminal box with ICN connectors - built-on accessories assignment: 4-pole / 6-pole motors

Motor type	M□□MABR	M□□MABS M□□MABI M□□MABA	M□□MABZ M□□MABH	M□□MABL
Motor frame size	Terminal box with ICN connector			
063-02 063-22	KK2	KK2		
063-12 063-32 063-42	KK2	KK2		
071-32 071-42 071-13 071-33	KK2	KK2	KK2	KK2
080-13 080-32 080-33 080-42	KK2	KK2	KK2	KK2
090-12 090-32	KK2	KK2	KK2	KK2
100-12 100-32	KK2	KK2	KK2	KK2
112-22 112-32	KK2	KK2	KK2	KK2
132-12 132-22 132-32	KK3	KK3	KK3	KK3



ICN connector

Dimensions of KK1

- ► For motors with connectors, the connector position can be selected in accordance with the terminal box position.
- ► If preferred positions are not specified in the order, the connector will be positioned as circled on the diagram below.

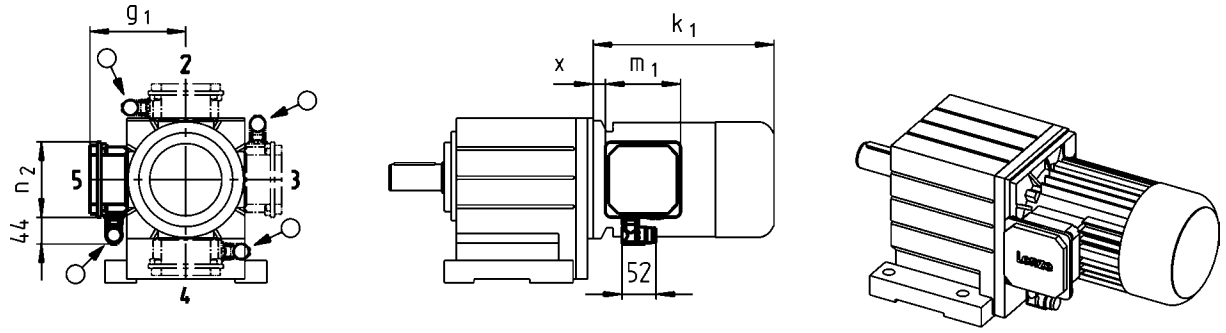

Size				
Motor				
	x	g_1	m_1	n_2
	[mm]	[mm]	[mm]	[mm]
063	12	117	93.0	93.0
071	15	126		
080	14	150	115	115
090	19	157		
100	20	166		
112	22	176		
132	33	195	122	122

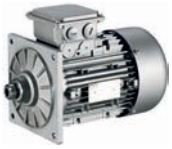

ICN connector

Connector position when using KK1

Terminal box in position 2

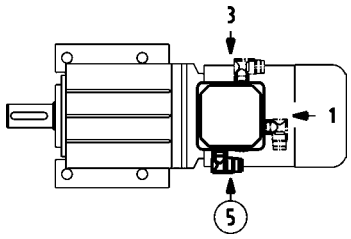

Terminal box in position 3

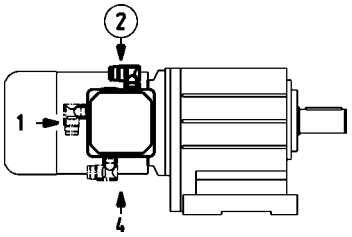

Terminal box in position 4

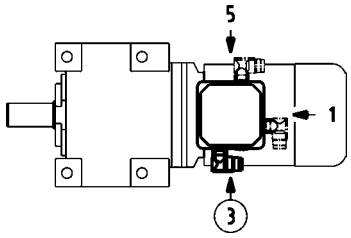

Terminal box in position 5

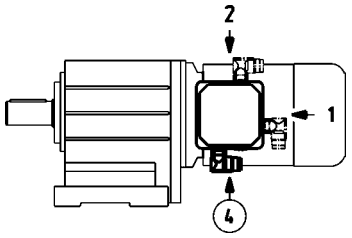



ICN connector

Dimensions of KK2/KK3

- For motors with connectors, the connector position can be selected in accordance with the terminal box position.
- If preferred positions are not specified in the order, the connector will be positioned as circled on the diagram below.

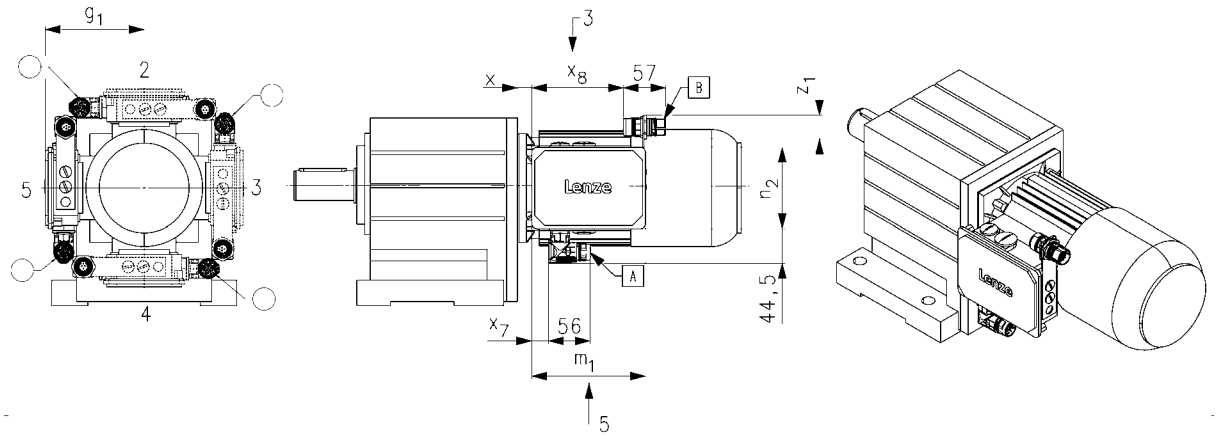

Size							
Motor							
	x	g_1	m_1	n_2	x_7	x_8	$z_{1, max}$
	[mm]	[mm]	[mm]	[mm]	[mm]	[mm]	[mm]
063	13	107	136	103	16	109	43
071	15	118					
080	17	132	152	121	23	125	41
090	22	137					
100	23	147					
112	25	158					
132	38	187	195	125	27	166	71



ICN connector

Connector position when using KK2/KK3

Terminal box in position 2

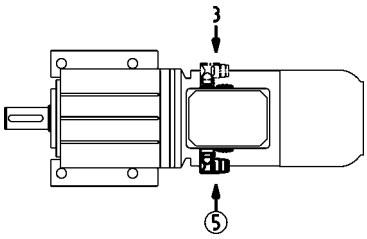

Terminal box in position 3

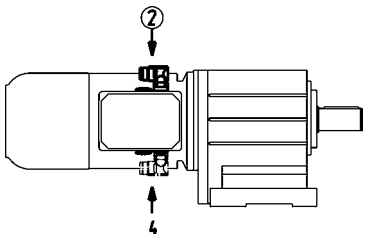

Terminal box in position 4

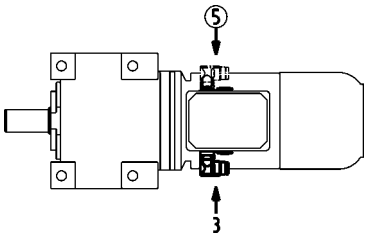

Terminal box in position 5

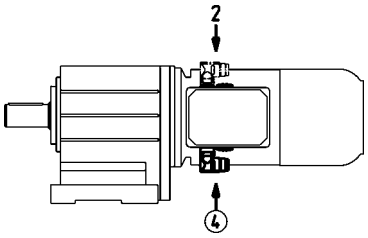

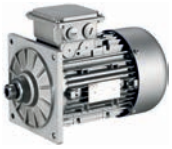

ICN connector

Blower connection

The blower is also optionally available with an ICN connector fixed to the terminal box of the blower for exceptionally fast commissioning. The connectors are fitted with a bayonet fixing, which is also compatible with conventional union nuts. Existing counter plugs can therefore continue to be used without difficulty.

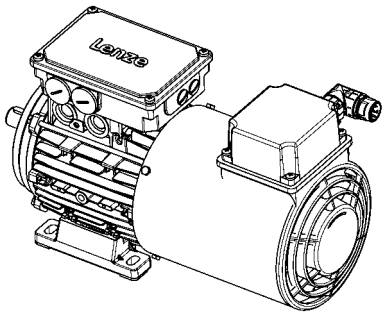

► Blower 1-ph

Pin assignment			
Contact	Designation	Meaning	
PE	PE	PE conductor	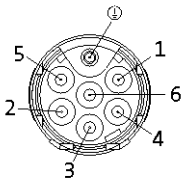
1	U1	Fan	
2	U2		
3		Not assigned	
4			
5			
6			

► Blower 3-ph

Pin assignment			
Contact	Designation	Meaning	
PE	PE	PE conductor	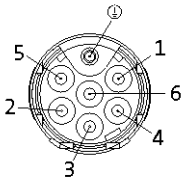
1	U	Phase U power	
2		Not assigned	
3	V	Phase V power	
4		Not assigned	
5			
6	W	Phase W power	

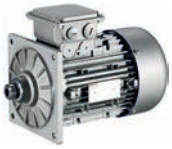

ICN connector

Dimensions of blower

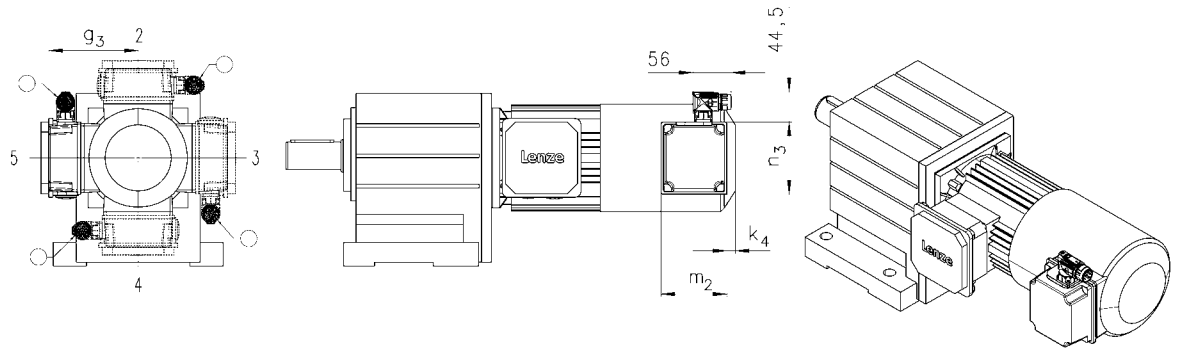

Size				
Motor				
	k_4	g_3	m_2	n_3
	[mm]	[mm]	[mm]	[mm]
063	12	115	95	105
071		122		
080	13	132	96	106
090	22	141	95	105
100		150		
112		162		
132	32	182		
160	31	209	96	106
180				
225				

► In addition, the cover of the blower terminal box (including connectors) can be rotated progressively through 90° if necessary.

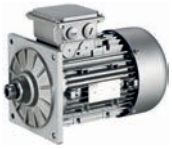

M12 connector

IG128-24V-H incremental encoder connection

As a standard this incremental encoder is equipped with a connection cable of about 0.5 m length and with a common industry standard M12 connector at its end.

Pin assignment			
Contact	Designation	Meaning	
1	$+U_B$	Supply +	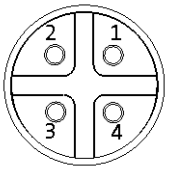
2	B	Track B	
3	GND	Mass	
4	A	Track A	

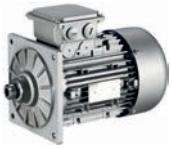

HAN connector

10E

In the case of the rectangular HAN-10E connectors, all six ends of the three winding phases are taken out to the power contacts. The motor circuit is therefore determined in the mating connector.

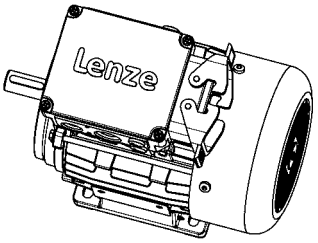

Pin assignment	
Contact	Meaning
1	Terminal board: U1
2	Terminal board: V1
3	Terminal board: W1
4	Brake +/AC
5	Brake -/AC
6	Terminal board: W2
7	Terminal board: U2
8	Terminal board: V2
9	Thermal sensor: +KTY/PTC/TKO
10	Thermal sensor: KTY/PTC/TKO

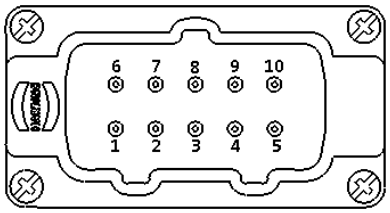



HAN connector

Modular

The connector is available with two different power modules (16 A or 40 A), depending on the rated motor current. The motor connection is determined in the terminal box and must be checked before commissioning.

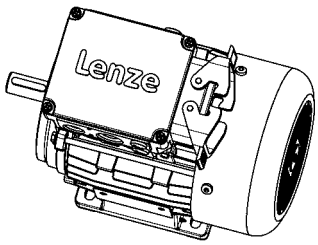

► HAN modular 16 A

Pin assignment			
Module	Contact	Meaning	
B		Dummy module	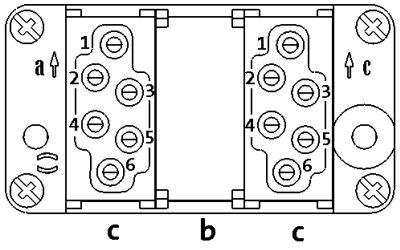
C	1	Thermal sensor: +KTY/PTC/TKO	
	2	Brake +/AC	
	3	Brake -/AC	
	4	Rectifier: Switching contact	
	5		
	6	Thermal sensor: KTY/PTC/TKO	

► HAN modular 40 A

Pin assignment			
Module	Contact	Meaning	
A	1	Terminal board: U1	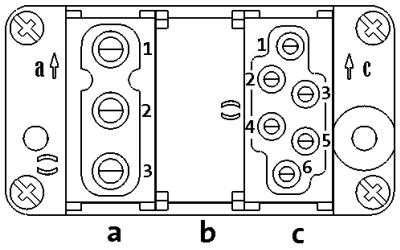
	2	Terminal board: V1	
	3	Terminal board: W1	
B		Dummy module	
C	1	Thermal sensor: +KTY/PTC/TKO	
	2	Brake +/AC	
	3	Brake -/AC	
	4	Rectifier: Switching contact	
	5		
	6	Thermal sensor: KTY/PTC/TKO	

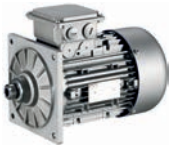

HAN connector

Motor terminal box with HAN connectors - built-on accessories assignment: 2-pole motors

Motor type	M□□MAXX M□□MABR	M□□MAZE M□□MABZ	M□□MALL M□□MABL	M□□MALZ
Motor frame size				
	Terminal box with HAN connector			
063-11 063-31	HAN-10E HAN modular			
071-11 071-31	HAN-10E HAN modular	HAN-10E HAN modular	HAN-10E HAN modular	HAN-10E HAN modular
080-11 080-31	HAN-10E HAN modular	HAN-10E HAN modular	HAN-10E HAN modular	HAN-10E HAN modular
090-31 090-11	HAN-10E HAN modular	HAN-10E HAN modular	HAN-10E HAN modular	HAN-10E HAN modular
100-31 100-41	HAN-10E HAN modular	HAN-10E HAN modular	HAN-10E HAN modular	HAN-10E HAN modular
112-31 112-41	HAN-10E HAN modular	HAN-10E HAN modular	HAN-10E HAN modular	HAN-10E HAN modular
132-21	HAN modular	HAN modular	HAN modular	HAN modular



HAN connector

Motor terminal box with HAN connectors - built-on accessories assignment: 4-pole / 6-pole motors

Motor type	M□□MAXX M□□MABR	M□□MAZE M□□MAHA M□□MABZ M□□MABH	M□□MALL M□□MABL	M□□MALZ M□□MALH
Motor frame size				
	Terminal box with HAN connector			
063-02 063-22	HAN-10E HAN modular			
063-12 063-32 063-42	HAN-10E HAN modular			
071-32 071-42 071-13 071-33	HAN-10E HAN modular	HAN-10E HAN modular	HAN-10E HAN modular	HAN-10E HAN modular
080-13 080-32 080-33 080-42	HAN-10E HAN modular	HAN-10E HAN modular	HAN-10E HAN modular	HAN-10E HAN modular
090-12 090-32	HAN-10E HAN modular	HAN-10E HAN modular	HAN-10E HAN modular	HAN-10E HAN modular
100-12 100-32	HAN-10E HAN modular	HAN-10E HAN modular	HAN-10E HAN modular	HAN-10E HAN modular
112-22 112-32	HAN-10E HAN modular	HAN-10E HAN modular	HAN-10E HAN modular	HAN-10E HAN modular
132-12 132-22 132-32	HAN modular	HAN modular	HAN modular	HAN modular
160-22 160-32	HAN modular			

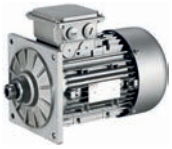

HAN connector

Dimensions

- For motors with connectors, the connector position can be selected in accordance with the terminal box position.
- Unless the connector position is specified, it will be supplied in position 1.

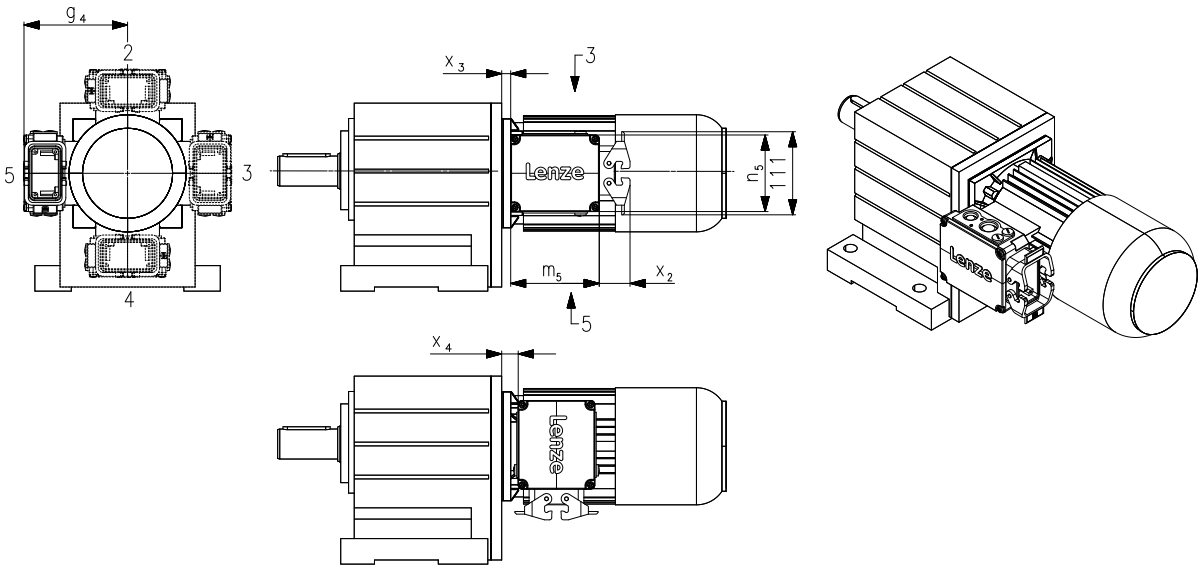

Size			
Motor			
	g_4	x_3	x_4
	[mm]	[mm]	[mm]
063	120	5.00	6.00
071	129	7.00	8.00
080	138	11.0	19.0
090	143	15.0	23.0
100	154	16.0	24.0
112	164	13.5	21.5
132	233	34.5	4.50
160	248	39.0	9.00

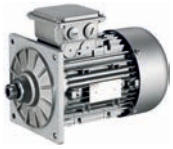

HAN connector

Position of connector

Connector in position 2

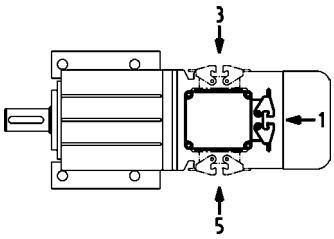

Connector in position 3

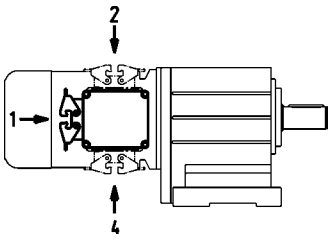

Connector in position 4

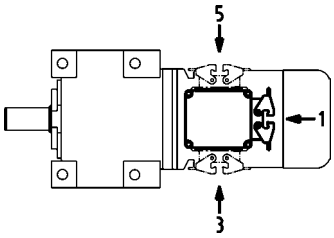

Connector in position 5

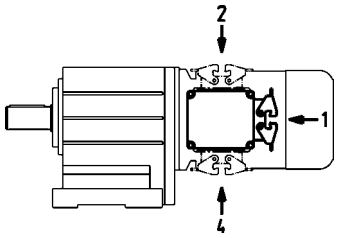

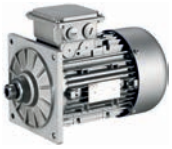

Handwheel

Design	Handwheel made from alloy, smooth wheel surface
Function	Manual operation: • Emergency operation • Setting-up operation for machines/systems
Note	The increased moment of inertia must be taken into account during project planning! For frequent switching operations, in particular if the direction of rotation changes: Please contact Lenze.

Size	Moment of inertia	Mass
Motor	Additional	Additional
	J	m
	[kgcm²]	[kg]
071	16.0	0.60
080	16.0	0.60
090	16.0	0.60
100	16.0	0.60
112	16.0	0.60
132	139	1.80



Handwheel

Dimensions, self-ventilated (4/6-pole)

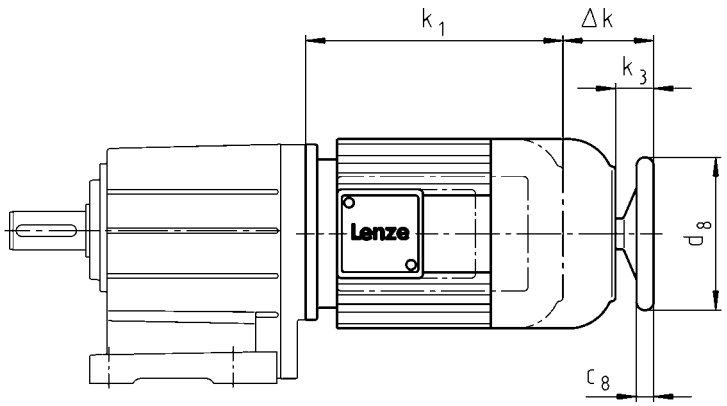

Motor type	
Built-on accessories	M□□MAHA M□□MABH M□□MALH

Motor frame size				
	Δ k	k_3	c_8	d_8
	[mm]	[mm]	[mm]	[mm]
071-32 071-42 071-13 071-33	70	34.0	18.0	160
080-32 080-42 080-13 080-33	91	34.0	18.0	160
090-12 090-32	80	32.0	18.0	160
100-12 100-32	94	42.0	18.0	160
112-22 112-32	107	39.0	18.0	160
132-12 132-22 132-32	126	50.0	26.0	250

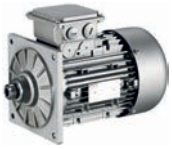

Centrifugal mass

Note	The increased moment of inertia must be taken into account during project planning! For frequent switching operations, in particular if the direction of rotation changes: Please contact Lenze.
Function	Increased motor centrifugal mass for smooth starting/braking
Design	Integral fan made from cast iron

	Moment of inertia	**Mass**
Motor frame size	Additional	Additional
	J	m
	[kgcm²]	[kg]
071	18.0	1.20
080	29.0	1.40
090-□1	83.0	2.80
090-□2	55.0	2.00
100	77.0	2.50
112	153	3.80
132	356	6.00



2nd shaft end

Dimensions, self-ventilated (2-pole)

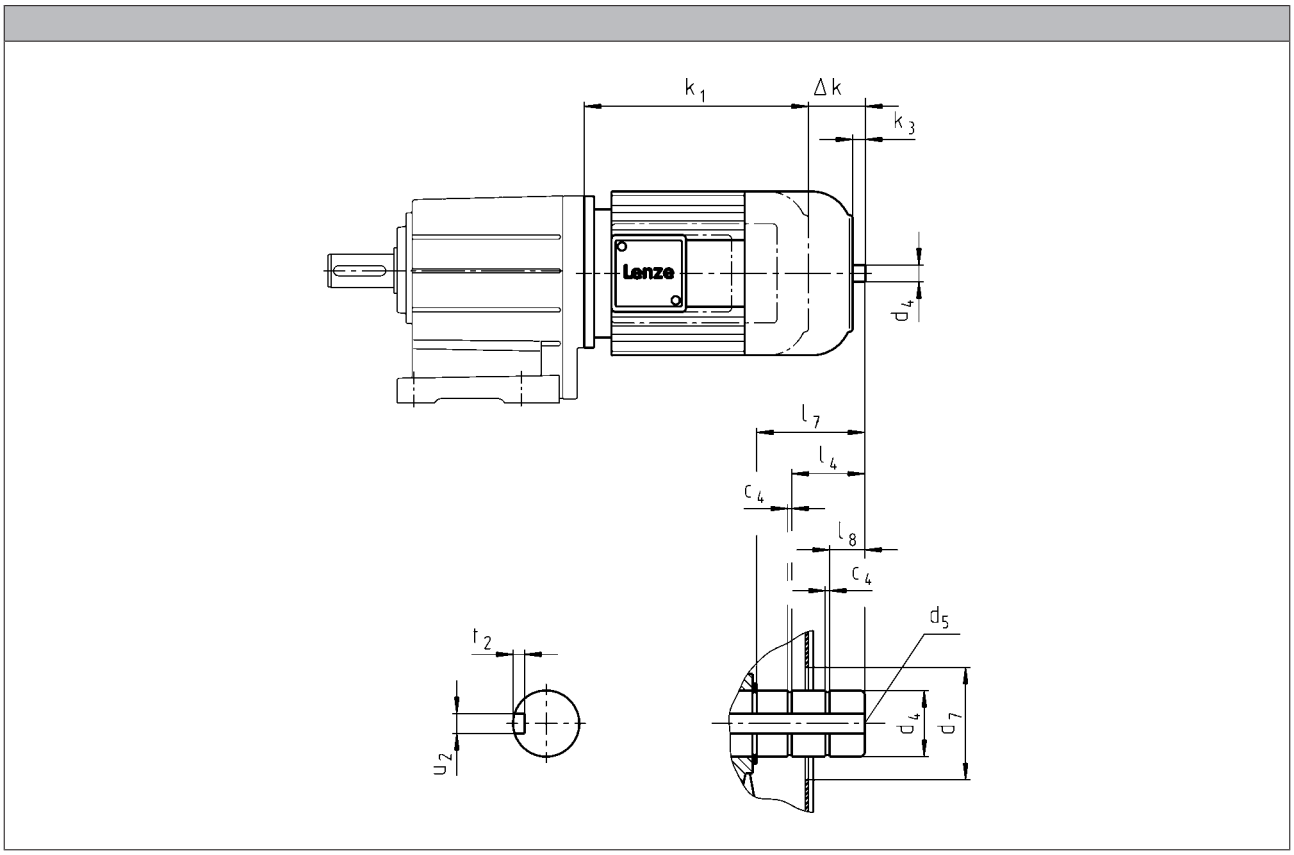

Motor type	
Built-on accessories	M□□MAZE M□□MABZ M□□MALZ

Motor frame size												
	Δk	k_3	c_4	d_4	d_4	d_5	d_7 [1]	l_4	l_7	l_8	u_2	t_2
				h6	j6							
	[mm]	[mm]	[mm]	[mm]	[mm]	[mm]	[mm]	[mm]	[mm]	[mm]	[mm]	[mm]
071-11 071-31	47	11.0	1.10	14.0		M5	34.0		19.0	3.00	5.00	3.00
080-11 080-31	68	9.00	1.30	19.0		M6	34.0		19.0	4.50	6.00	3.20
090-11 090-31	57	9.00	1.30		20.0	M6	34.0		19.5	5.50	6.00	3.50
100-31 100-41	71	18.5	1.30		25.0	M10	34.0	17.0	32.5	10.5	8.00	4.00
112-31 112-41	84	16.0	1.30		25.0	M10	34.0	17.0	28.5	7.00	8.00	4.00
132-21	101	24.5	1.60		30.0	M10	48.0	24.5	42.0	8.50	8.00	4.00

[1] During operation, appropriate measures must be taken to make fan cover opening safe.



2nd shaft end

Dimensions, self-ventilated (4/6-pole)

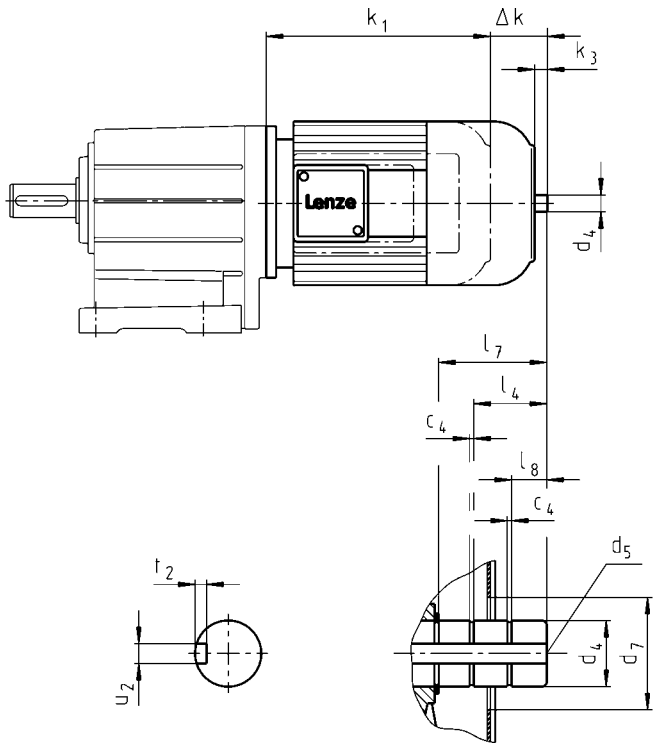

Motor type	
Built-on accessories	M□□MAZE M□□MABZ M□□MALZ

Motor frame size												
	Δk	k_3	c_4	d_4	d_4	d_5	d_7 [1]	l_4	l_7	l_8	u_2	t_2
				h6	j6							
	[mm]	[mm]	[mm]	[mm]	[mm]	[mm]	[mm]	[mm]	[mm]	[mm]	[mm]	[mm]
071-32 071-42 071-13 071-33	47	11.0	1.10	14.0		M5	34.0		19.0	3.00	5.00	3.00
080-32 080-42 080-13 080-33	68	9.00	1.10	14.0		M5	34.0		19.0	4.50	5.00	3.00
090-12 090-32	57	9.00	1.10	14.0		M5	34.0		19.0	5.00	5.00	3.00
100-12 100-32	71	18.5	1.30		20.0	M6	34.0	17.0	32.5	10.5	6.00	3.50
112-22 112-32	84	16.0	1.30		20.0	M6	34.0	17.0	28.5	7.00	6.00	3.50
132-12 132-22 132-32	101	24.5	1.60		30.0	M10	46.0	24.5	42.0	8.50	8.00	4.00

[1] During operation, appropriate measures must be taken to make fan cover opening safe.



Protection cover

Dimensions, self-ventilated (2-pole)

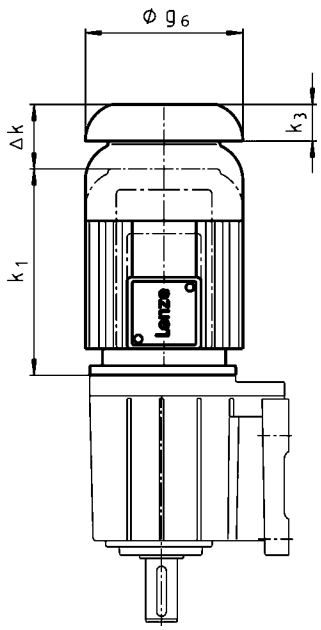

	Motor type					
	M□□MAXX	M□□MABR	M□□MABL	M□□MALL		

Motor frame size						
	Δ k	Δ k	Δ k	Δ k	k_3	g_6
	[mm]	[mm]	[mm]	[mm]	[mm]	[mm]
063-11 063-31	26	66			11.0	123
071-11 071-31	26	78	78	26	12.0	138
080-11 080-31	26	99	99	30	16.0	156
090-11 090-31	26	94	94	26	15.0	176
100-31 100-41	31	107	107	107	17.0	194
112-31 112-41	31	121	121	31	18.0	218
132-21	31	141	141	31	20.0	257



Protection cover

Dimensions, self-ventilated (4/6-pole)

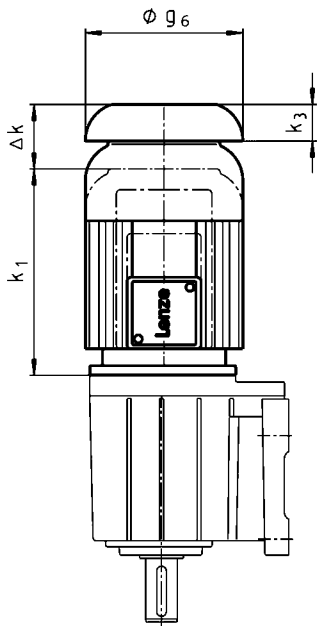

	Motor type							
	M□□MAXX	M□□MABR	M□□MABS M□□MABI M□□MABA	M□□MABL	M□□MARS M□□MAIG M□□MAAG	M□□MALL		

Motor frame size								
	Δ k	Δ k	Δ k	Δ k	Δ k	Δ k	k_3	g_6
	[mm]	[mm]	[mm]	[mm]	[mm]	[mm]	[mm]	[mm]
063-02 063-22		97	160		97		11.0	123
063-12 063-32 063-42	26	66	129		82		11.0	123
071-32 071-42 071-13 071-33	26	78	122	78	78	26	12.0	138
080-32 080-42 080-13 080-33	26	99	137	99	127	30	16.0	156
090-12 090-32	26	94	131	94	113	26	15.0	176
100-12 100-32	31	107	132	107	112	107	17.0	194
112-22 112-32	31	121	151	121	111	31	18.0	218
132-12 132-22 132-32	31	141	156	141	134	31	20.0	257
160-22 160-32	37	142	228		120		25.0	310



Protection cover

Dimensions, forced ventilated (2-pole)

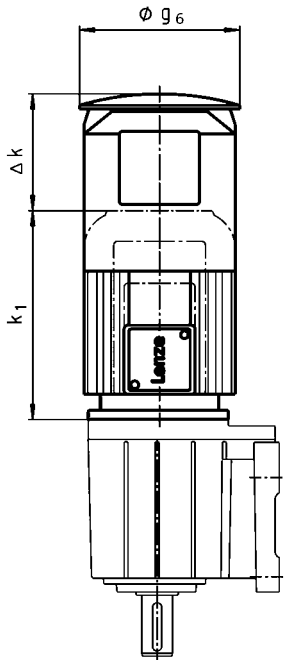

	Motor type		
	M□□MAXX	M□□MABR	

Motor frame size			
	Δ k	Δ k	g_6
	[mm]	[mm]	[mm]
063-11 063-31	169	209	133
071-11 071-31	165	202	150
080-11 080-31	168	224	170
090-11 090-31	157		
100-31 100-41	137	198	210
112-31 112-41	135	216	249
132-21	140	226	300

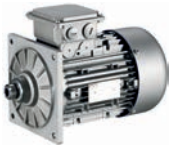

Protection cover

Dimensions, forced ventilated (4/6-pole)

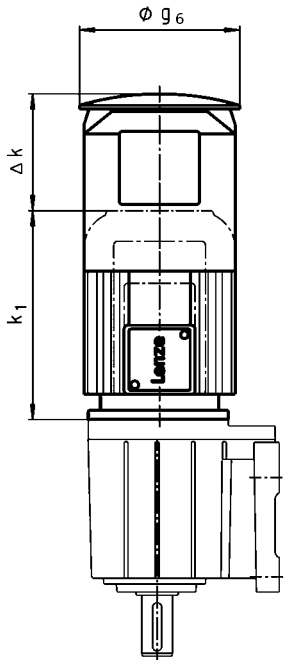

	Motor type			
	M□□MAXX	M□□MABR M□□MABS M□□MABI M□□MABA	M□□MARS M□□MAIG M□□MAAG	

Motor frame size				
	Δ k	Δ k	Δ k	g_6
	[mm]	[mm]	[mm]	[mm]
063-12 063-32 063-42	169	209	209	133
071-32 071-42 071-13 071-33	165	202	202	150
080-32 080-42 080-13 080-33	168	224	224	170
090-12 090-32	157	210	210	188
100-12 100-32	137	198	198	210
112-22 112-32	135	216	216	249
132-12 132-22 132-32	140	226	226	300
160-22 160-32	155	267	267	338

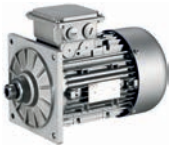

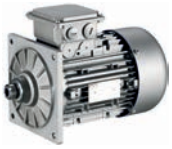

15628584

Lenze SE
Hans-Lenze-Straße 1
D-31855 Aerzen
Phone: +49 (0)5154 82-0
Telefax: +49 (0)5154 82 28 00

www.Lenze.com