L-force catalogue

Automation systems
Drive solutions

Controls
Inverters
Motors
Gearboxes
Engineering Tools

Motors: MF three-phase AC motors

Gearboxes: GKR bevel gearboxes, GKS helical-bevel gearboxes, GSS helical-worm gearboxes

Lenze
As easy as that.

Contents of the L-force catalogue

About Lenze		Lenze makes many things easy for you.	
		A matter of principle: the right products for every application.	
		L-force product portfolio	
Automation systems		Controller-based Automation	1.1
		Drive-based automation	1.2
Drive solutions		HighLine tasks	2.1
		StateLine tasks	2.2
		BaseLine tasks	2.3
Controls	Cabinet Controller	Controller 3200 C	3.1
		I/O system 1000	3.2
	Panel Controller	Controller p500	3.3
		Monitor Panel	3.4
Inverters	Decentralised	Inverter Drives 8400 protec	4.1
		Inverter Drives 8400 motec	4.2
		Inverter Drives SMV IP65	4.3
	Cabinet	Servo Drives 9400 HighLine	4.4
		Inverter Drives 8400 TopLine	4.5
		Servo Inverters i700	4.6
		Inverter Drives 8400 HighLine	4.7
		Inverter Drives 8400 StateLine	4.8
		Inverter Drives SMV IP31	4.9
		Inverter Drives 8400 BaseLine	4.10
Motors	Servo motors	MCS synchronous servo motors	5.1
		MD□KS synchronous servo motors	5.2
		MQA asynchronous servo motors	5.3
		MCA asynchronous servo motors	5.4
	Three-phase AC motors	MF three-phase AC motors	5.5
		MH three-phase AC motors	5.6
		MD three-phase AC motors	5.7
		m300 Lenze Smart Motor	5.8
		MD/MH basic three-phase AC motors	5.9
Gearboxes	Axial gearbox	g700-P planetary gearbox	6.1
		MPR/MPG planetary gearboxes	6.2
		g500-H helical gearbox	6.3
		GST helical gearboxes	6.4
		g500-S shaft-mounted helical gearbox	6.5
		GFL shaft-mounted helical gearboxes	6.6
	Right-angle gearbox	g500-B bevel gearbox	6.7
		GKR bevel gearboxes	6.8
		GKS helical-bevel gearboxes	6.9
		GSS helical-worm gearboxes	6.10
	Motor data	Assignment see above	6.11
Engineering Tools		Navigator	7.1
		Drive Solution Designer	7.2
		Drive Solution Catalogue	7.3
		Engineer	7.4
		PLC Designer	7.5
		VisiWinNET®	7.6
		EASY Starter	7.7

Selected portfolio

Additional portfolio

Lenze makes many things easy for you.

With our motivated and committed approach, we work together with you to create the best possible solution and set your ideas in motion - whether you are looking to optimise an existing machine or develop a new one. We always strive to make things easy and seek perfection therein. This is anchored in our thinking, in our services and in every detail of our products. It's as easy as that!

1

Developing ideas

Are you looking to build the best machine possible and already have some initial ideas? Then get these down on paper together with us, starting with small innovative details and stretching all the way to completely new machines. Working together, we will develop an intelligent and sustainable concept that is perfectly aligned with your specific requirements.

2

Drafting concepts

We see welcome challenges in your machine tasks, supporting you with our comprehensive expertise and providing valuable impetus for your innovations. We take a holistic view of the individual motion and control functions here and draw up consistent, end-to-end drive and automation solutions for you - keeping everything as easy as possible and as extensive as necessary.

3

Implementing solutions

Our easy formula for satisfied customers is to establish an active partnership with fast decision-making processes and an individually tailored offer. We have been using this simple principle to meet the ever more specialised customer requirements in the field of mechanical engineering for many years.

4

Manufacturing machines

Functional diversity in perfect harmony: as one of the few full-range providers in the market, we can provide you with precisely those products that you actually need for any machine task – no more and no less. Our L-force product portfolio, a consistent platform for implementing drive and automation tasks, is invaluable in this regard.

5

Ensuring productivity

Productivity, reliability and new performance peaks on a daily basis – these are our key success factors for your machine. After delivery, we offer you cleverly devised service concepts to ensure continued safe operation. The primary focus here is on technical support, based on the excellent application expertise of our highly-skilled and knowledgeable after-sales team.

A matter of principle: the right products for every application.

Lenze's extensive L-force product portfolio follows a very simple principle. The functions of our finely scaled products are assigned to the three lines Base-Line, State-Line or High-Line.

But what does this mean for you? It allows you to quickly recognise which products represent the best solution for your own specific requirements.

Powerful products with a major impact:
- Easy handling
- High quality and durability
- Reliable technologies in tune with the latest developments

Lenze products undergo the most stringent testing in our own laboratory. This allows us to ensure that you will receive consistently high quality and a long service life. In addition to this, five logistics centres ensure that the Lenze products you select are available for quick delivery anywhere across the globe. It's as easy as that!

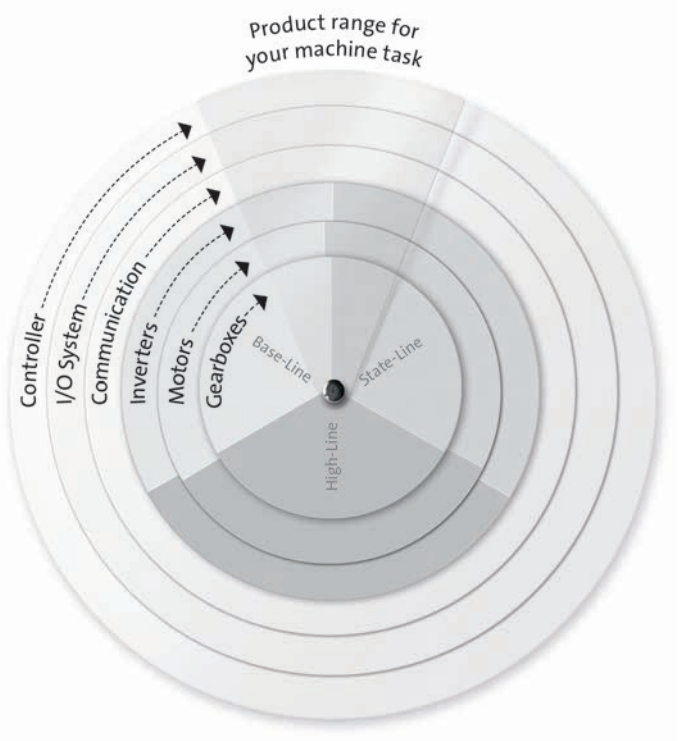

L-force product portfolio

Controls

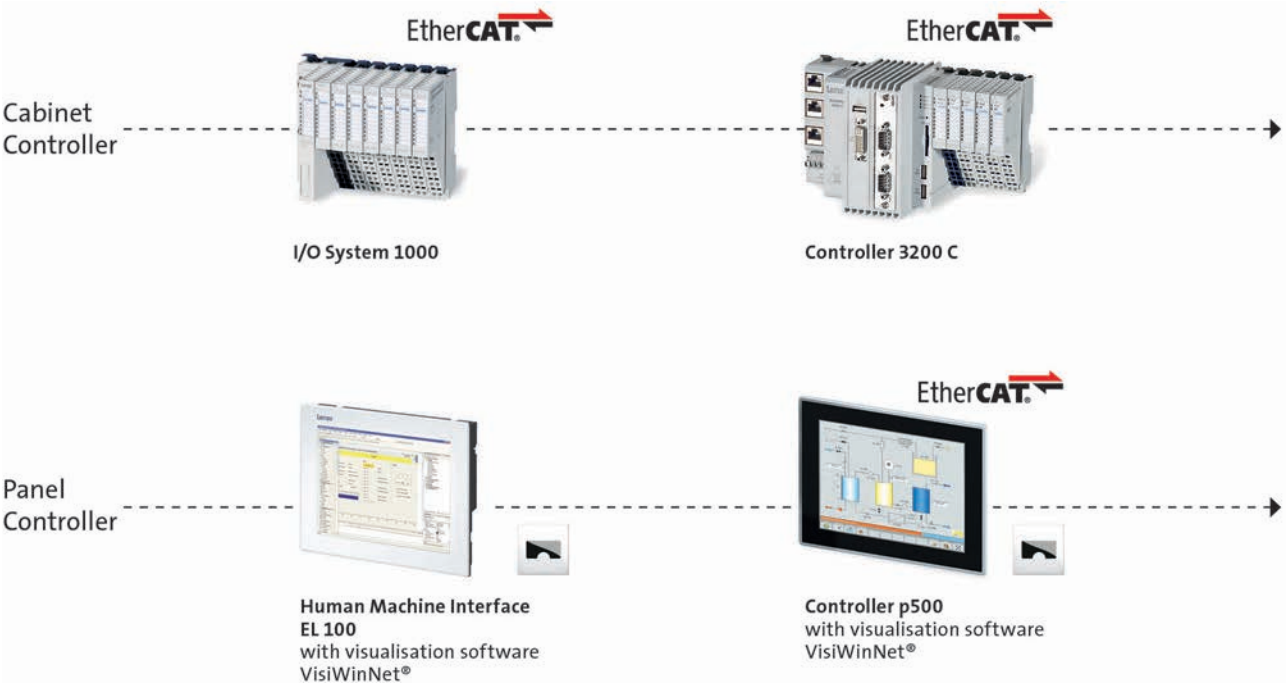

Engineering Tools

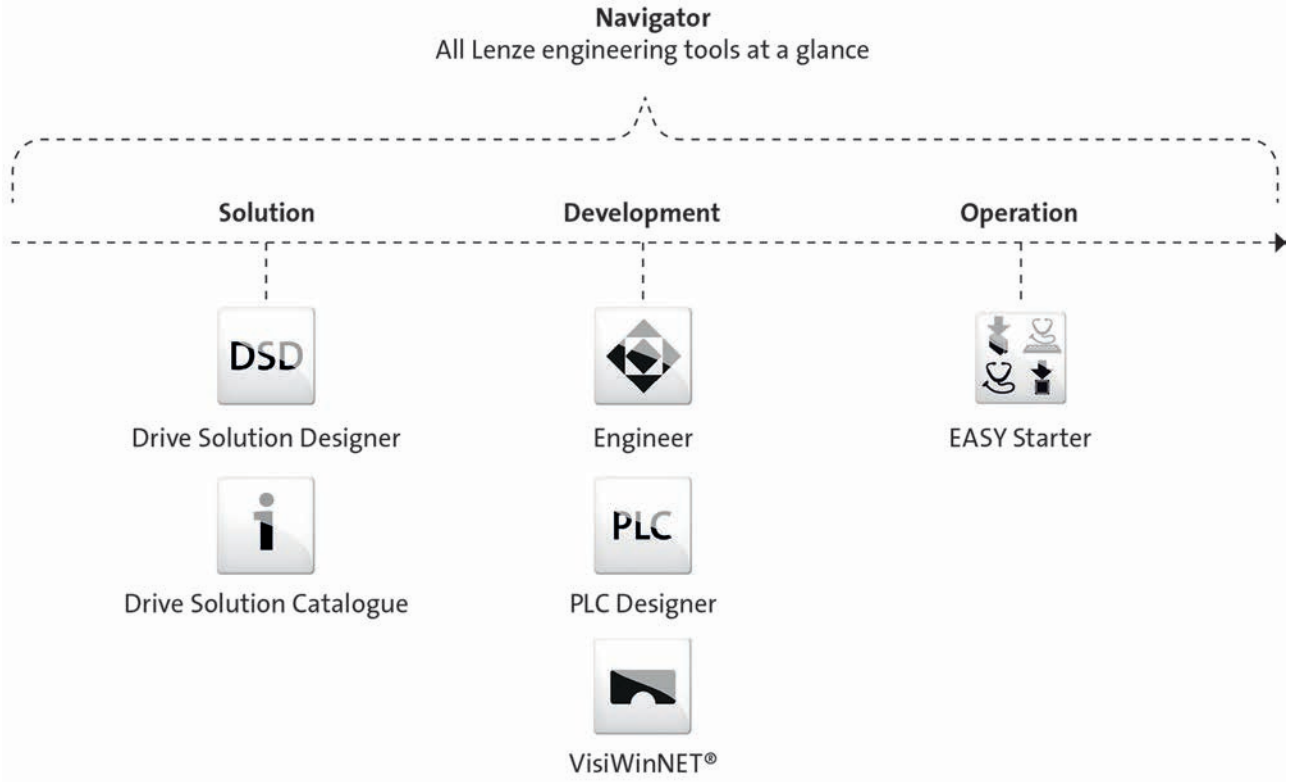

L-force product portfolio

Inverters

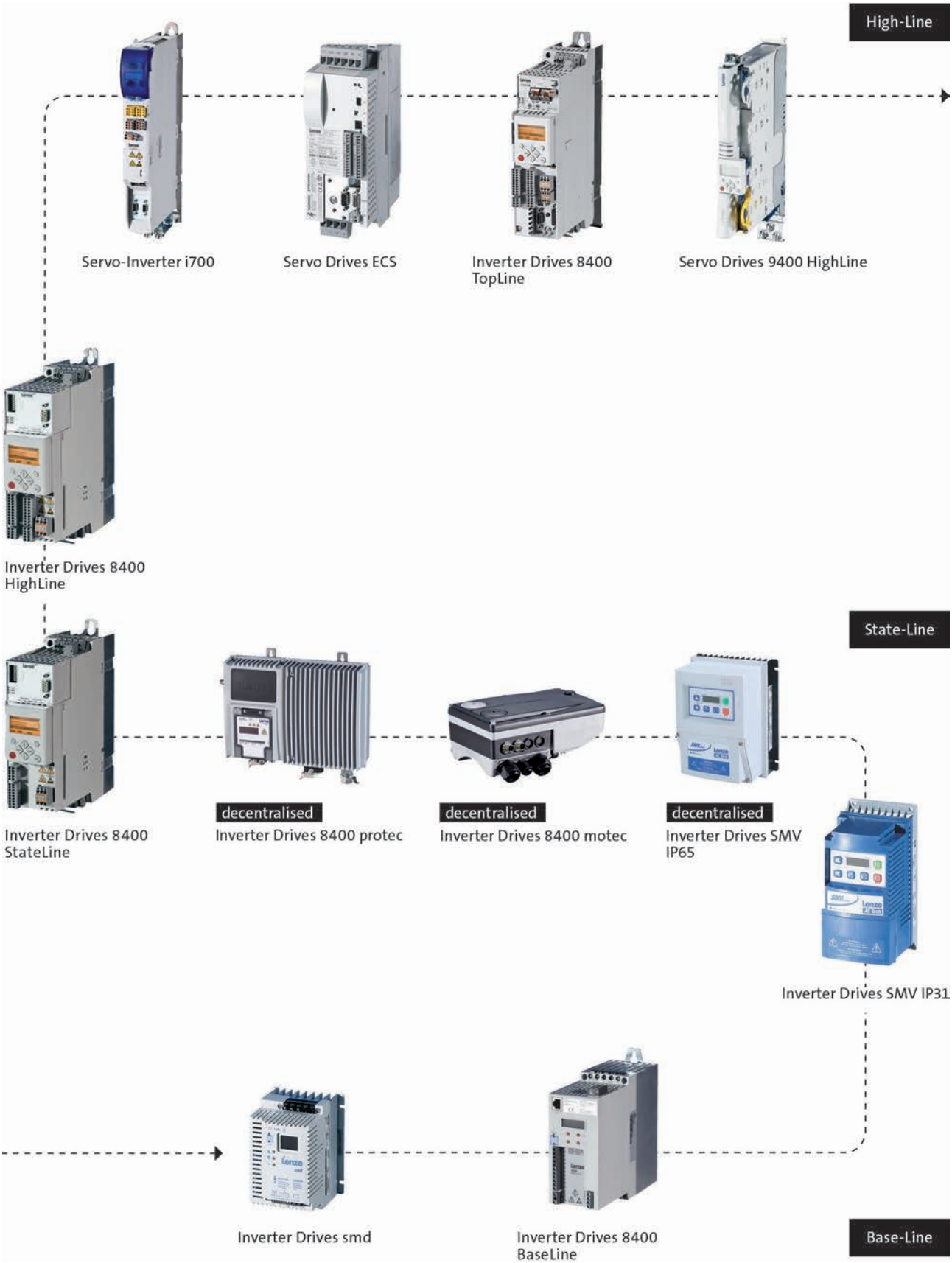

L-force product portfolio

Motors

High-Line

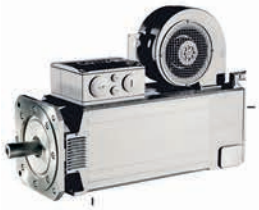

MQA asynchronous servo motors



SDSGS synchronous servo motors



MDXKS synchronous servo motors



Synchronous servo motors MCS



Asynchronous servo motors MCA



Asynchronous servo motors SDSGA

State-Line



MF three-phase AC motors



MH three-phase AC motors



MD three-phase AC motors



Basic MD/MH three-phase AC motors

Base-Line

L-force product portfolio

Gearboxes

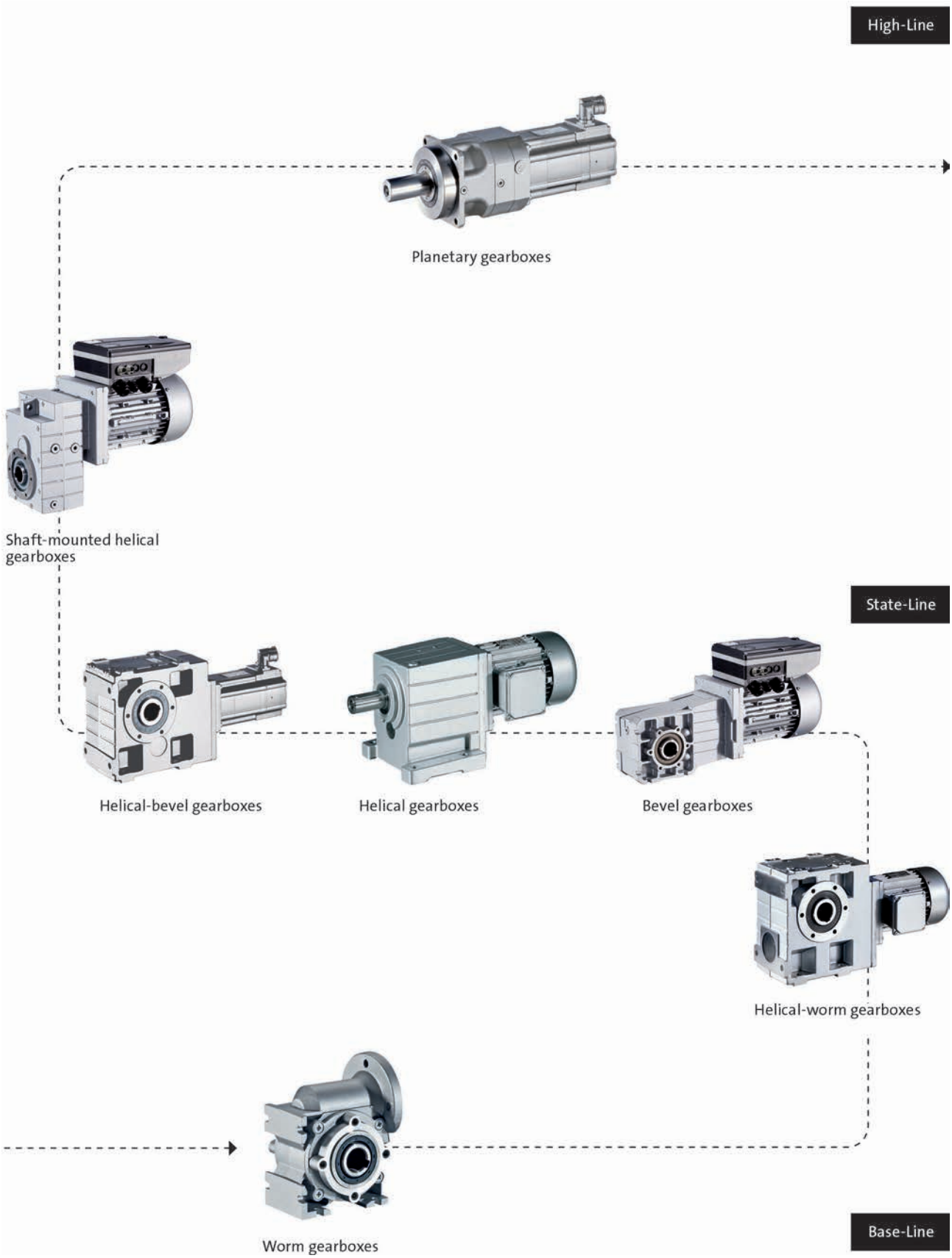

GKR bevel gearboxes

0.55 ... 11 kW

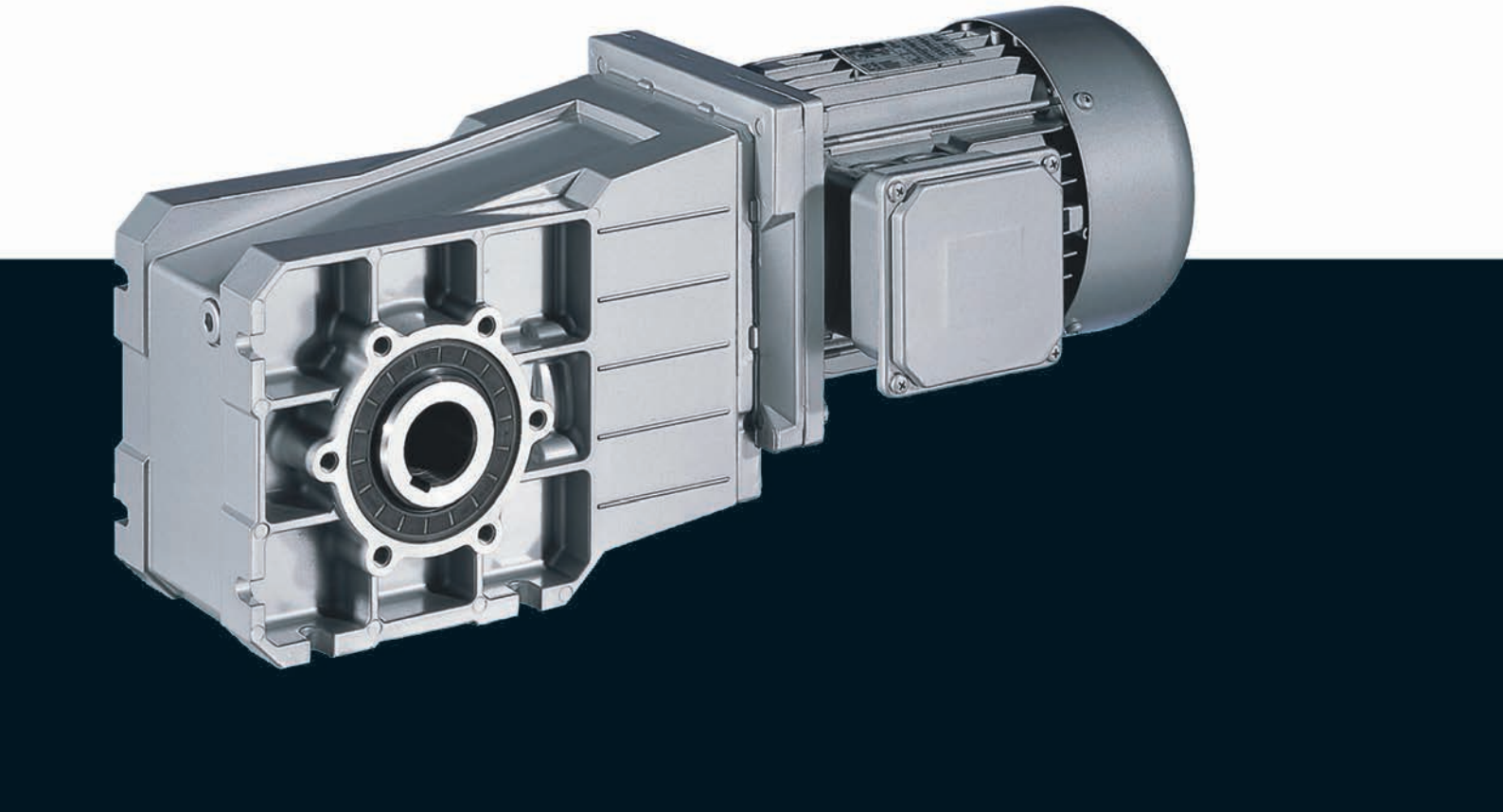

GKR bevel gearboxes

Contents

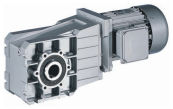

General information	List of abbreviations	6.8 - 4
	Product key	6.8 - 5
	Product information	6.8 - 7
	Functions and features	6.8 - 8
	Dimensioning	6.8 - 13
	Notes on ordering	6.8 - 18
	Ordering details checklist	6.8 - 19
Technical data	Permissible radial and axial forces at output	6.8 - 23
	Output backlash in angular minutes	6.8 - 26
	Moments of inertia	6.8 - 27
	Weights	6.8 - 28
	Selection tables	6.8 - 31
	Dimensions	6.8 - 42
Accessories	Hollow shaft with shrink disc	6.8 - 51
	Mounting set for hollow shaft circlip: Proposed design for auxiliary tools	6.8 - 52
	Hoseproof hollow shaft cover	6.8 - 53
	Gearboxes with 2nd output shaft end	6.8 - 53
	Rubber buffer for torque plate	6.8 - 54
	Torque plate on threaded pitch circle	6.8 - 55
	Torque plate at housing foot	6.8 - 57
	Ventilations	6.8 - 58

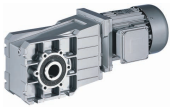

List of abbreviations

$\eta_{c=1}$		Efficiency
c		Load capacity
f_N	[Hz]	Rated frequency
$F_{ax,max}$	[N]	Max. axial force
$F_{rad,max}$	[N]	Max. radial force
H_{max}	[m]	Site altitude
i		Ratio
J	[kgcm²]	Moment of inertia
m	[kg]	Mass
M_2	[Nm]	Output torque
n_2	[r/min]	Output speed
n_N	[r/min]	Rated speed
P_N	[kW]	Rated power
$S_{hü}$	[1/h]	Transition operating frequency
$T_{opr,max}$	[°C]	Max. ambient operating temperature
$T_{opr,min}$	[°C]	Min. ambient operating temperature
$U_{N,\Delta}$	[V]	Rated voltage
$U_{N,Y}$	[V]	Rated voltage

CE	Communauté Européenne
CSA	Canadian Standards Association
DIN	Deutsches Institut für Normung e.V.
EMC	Electromagnetic compatibility
EN	European standard
IEC	International Electrotechnical Commission
IM	International Mounting Code
IP	International Protection Code
NEMA	National Electrical Manufacturers Association
UL	Underwriters Laboratory Listed Product
UR	Underwriters Laboratory Recognized Product
VDE	Verband deutscher Elektrotechniker (Association of German Electrical Engineers)
CCC	China Compulsory Certificate
GOST	Certificate for Russian Federation
cURus	Combined certification marks of UL for the USA and Canada
UkrSEPRO	Certificate for Ukraine

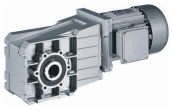

Product key

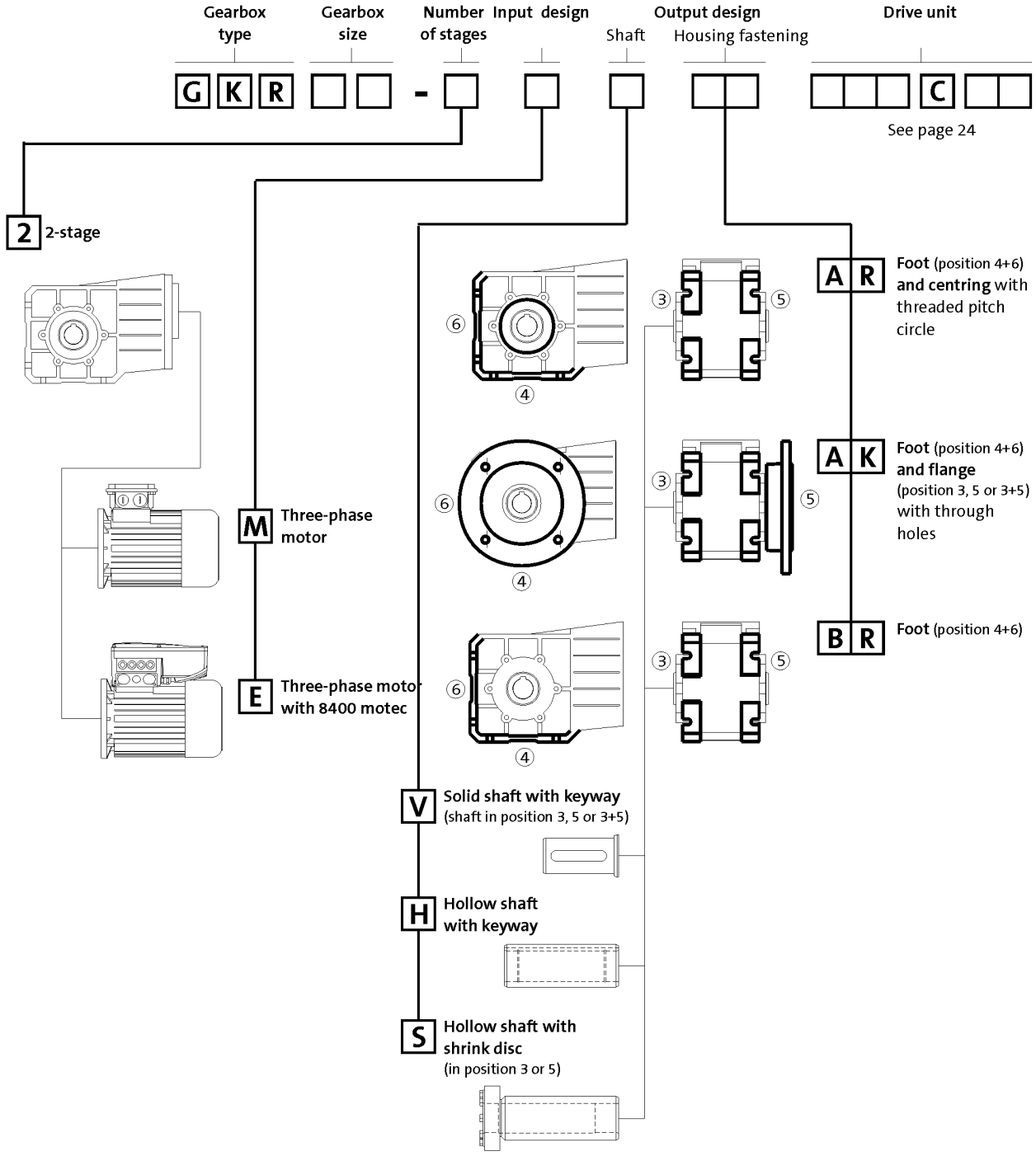

	Output design			
	V	H	S	K
	d x l [mm]	d [mm]	d [mm]	Øa2 [mm]
GKR03-2	20x40	18/20	20	110/120
GKR04-2	20x40	20/25	20	120/160
GKR05-2	30x60	30/35	30/35	160/200
GKR06-2	35x70	40/45	40	200/250

Product key

Mounting position (A...F) and position of system blocks (1...6)

A	B	C
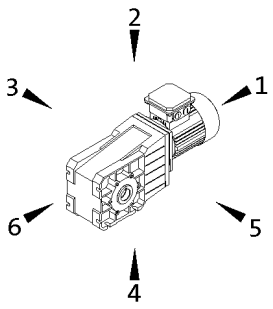	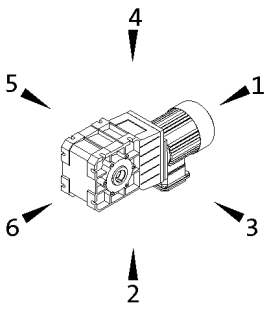	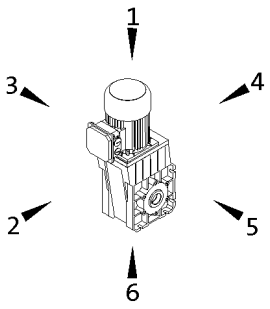
D	**E**	**F**
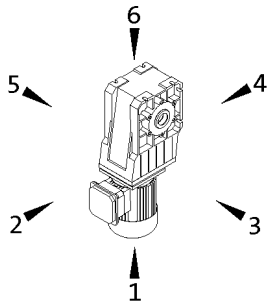	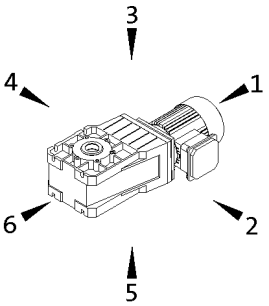	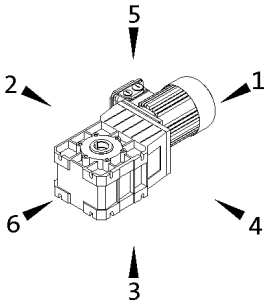

Hollow shaft: 0
Solid shaft: 3, 5, 8 (3+5)
Hollow shaft with shrink disc: 3, 5

Without flange: 0
Flange: 3, 5, 8 (3+5)
Terminal box / motec: 2, 3, 4, 5

Gearbox designs

Basic versions	
Motor efficiency	Standard efficiency Increased efficiency (IE2)
Surface and corrosion protection	No OKS (unpainted, aluminium housing) OKS-S (paint: RAL 7012)
Lubricant	CLP 460 (mineral)
Ventilation	Breather elements for GKR06

Options	
Surface and corrosion protection	OKS-G (primer: grey) OKS-S (special paint according to RAL) OKS-M (special paint according to RAL) OKS-L (special paint according to RAL)
Lubricant	CLP HC 320 (synthetic) CLP HC 220 USDA H1 (synthetic)
Shaft sealing rings	Driven shaft: Viton
Accessories	Rubber buffer for torque plate (GKR 03/04 only) Torque plate on threaded pitch circle Housing foot torque plate (GKR05/06 only) 2nd output shaft end Shrink disc cover Hoseproof hollow shaft cover Mounting set for hollow shaft circlip
Nameplate	Metal nameplate (supplied loose) Adhesive nameplate (supplied loose)

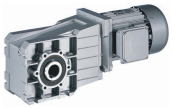

Product information

Lenze provides a geared motor construction kit, which covers a wide range of requirements. Numerous drive-side and output-side options enable precise adaptation of the drive to the specific application. This is the basis for versatile applications and functional scalability of our gearboxes and geared motors.
The modular concept and high power density make extremely compact sizes possible. Optimised teeth profiles and ground gears ensure low-noise operation and low backlash. The gearboxes are of compact and hence space-saving construction.

For maximum efficiency

Our bevel gearboxes are a showpiece for lightweight engineering. They are also highly efficient and are equipped with wear free teeth. Together with three-phase AC motors and servo motors, they form and efficient and compact drive unit. They are available as a 2-stage version with a torque of up to 450 Nm and a ratio of up to i=76.

Inverters for motor-proximity installation

The Drive Package with decentralised Inverter Drives 8400 motec covers a power range up to 7.5 kW.

Designs

- 2-stage and -stage gearboxes
- Hollow shaft with keyway or shrink disc
- Solid shaft with keyway
- Foot or flange mounting
- Torque plate, including rubber buffer
- With MF three-phase AC motors (inverter-optimised) power range 0.55 ... 7.5 kW

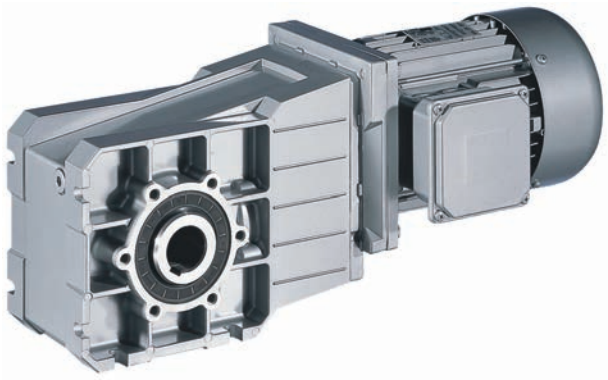

Bevel geared motor GKR05-2M HBR 090-32

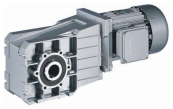

Functions and features

Gearbox type	GKR
Housing	
Design	Cuboid
Material	Aluminium / cast iron
Solid shaft	
Design	with keyway to DIN 6885
Tolerance	m6 (d > 50 mm) k6 (d ≤ 50 mm)
Material	Tempered steel C45 or 42CrMo4
Hollow shaft	
Design	H: with keyway S: smooth
Tolerance	Bore H7
Material	Tempered steel C45
Toothed parts	
Design	Optimised tooth flanks and profile geometry Ground tooth flanks
Material	Case-hardened steel
Shaft-hub joint	
	1st stage/prestage/helical (bevel) gearbox: Friction-type connection Output stage (= 2nd, 3rd or 4th stage): Friction-type or positive-fit connection
Shaft sealing rings	
Design	With dust lip
Material	NB / FP
Bearing	
Design	Ball bearing / tapered-roller bearing depending on size and design
Lubricants	
Standard	DIN 51502
Quantities	corresponding to mounting position (see operating instructions)
Mechanical efficiency	
1-stage gearboxes [$\eta_{c=1}$]	
2-stage gearboxes [$\eta_{c=1}$]	0.96
3-stage gearboxes [$\eta_{c=1}$]	
4-stage gearboxes [$\eta_{c=1}$]	
Notes	

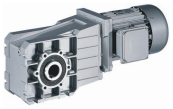

Functions and features

Lubricants

Lenze gearboxes and geared motors are ready for operation on delivery and are filled with lubricants specific to both the drive and the design. The mounting position and design specified in the order are key factors in choosing the volume of lubricant.

The lubricants listed in the lubricant table are approved for use in Lenze drives.

Lubricant table

Mode	CLP 460	CLP HC 320	CLP HC 220 USDA H1
Ambient temperature [°C]	0 ... +40	-25 ... +50	-20 ... +40
Specification	Mineral based oil with additives	Synthetic-based oil (synthetic hydrocarbon / poly-alpha-olefin oil)	
Note			For food processing industry
Changing interval	16000 operating hours not later than after three years (oil temperature 70...80 °C)	25000 operating hours not later than after three years (oil temperature 70...80 °C)	16000 operating hours not later than after three years (oil temperature 70...80 °C)
Fuchs	Fuchs Renolin CLP 460	Fuchs Renolin Unisyn CLP 320	bremer & leguil Cassida Fluid GL 220
Klüber	Klüberoil GEM1-460 N	Klübersynth GEM4-320 N	Klüberoil 4 UH1-220 N
Shell	Shell Omala 460	Shell Omala Oil HD 320	

► Please contact your Lenze office if you are operating at ambient temperatures in areas up to < -20 °C > or up to +40°C.

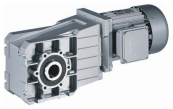

Functions and features

Surface and corrosion protection

For optimum protection of geared motors against ambient conditions, the surface and corrosion protection system (OKS) offers tailor-made solutions.

Various surface coatings combined with other protective measures ensure that the geared motors operate reliably even at high air humidity, in outdoor installations or in the presence of atmospheric impurities. Any colour from the RAL Classic collection can be chosen for the top coat. The geared motors are also available unpainted (no surface and corrosion protection).

Surface and corrosion protection system	Applications	Measures
	Catalogue text	Catalogue text
OKS-G (primed)	• Dependent on subsequent top coat applied	• 1K priming coat (grey) • Zinc-coated screws • Rust-free breather elements Optional measures • Stainless steel nameplate
OKS-S (small)	• Standard applications • Internal installation in heated buildings • Air humidity up to 90%	• Surface coating as per corrosivity category C1 (in line with EN 12944-2) • Zinc-coated screws • Rust-free breather elements Optional measures • Stainless steel nameplate
OKS-M (medium)	• Internal installation in non-heated buildings • Covered, protected external installation • Air humidity up to 95%	• Surface coating as per corrosivity category C2 (in line with EN 12944-2) • Zinc-coated screws • Rust-free breather elements Optional measures • Stainless steel shaft • Stainless steel nameplate • Rust-free shrink disc (on request)
OKS-L (high)	• External installation • Air humidity above 95% • Chemical industry plants • Food industry	• Surface coating as per corrosivity category C3 (in line with EN 12944-2) • Blower cover and B end shield additionally primed • Cable glands with gaskets • Corrosion-resistant brake with cover ring, stainless friction plate, and chrome-plated armature plate (on request) • All screws/screw plugs zinc-coated • Stainless breather elements • Threaded holes that are not used are closed by means of plastic plugs Optional measures • Sealed recesses on motor (on request) • Stainless steel shaft • Stainless steel nameplate • Rust-free shrink disc (on request) • Additional priming coat on cast iron fan • Oil expansion tank and torque plates painted separately and supplied loose

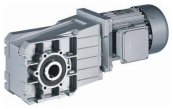

Functions and features

Structure of surface coating

Surface and corrosion protection system	Corrosivity category	Surface coating	Colour
	DIN EN ISO 12944-2	Structure	
Without OKS (uncoated)		Dipping primed gearbox	
OKS-G (primed)		Dipping primed gearbox 1K priming coat	
OKS-S (small)	C1	Dipping primed gearbox 2K-PUR top coat	Standard: RAL 7012 Optional: RAL Classic
OKS-M (medium)	C2	Dipping primed gearbox 1K priming coat 2K-PUR top coat	Standard: RAL 7012 Optional: RAL Classic
OKS-L (high)	C3	Dipping primed gearbox 2K-EP priming coat 2K-PUR top coat	Standard: RAL 7012 Optional: RAL Classic

► The gearboxes GKR 03 ... 06 have an aluminium housing, therefore a dipping primer is dispensed with in the case of these gearboxes.

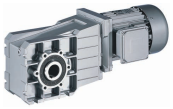

Functions and features

Ventilation

Gearboxes without ventilation
No ventilation is required for gearboxes GKR03 ... 05.

Gearboxes with ventilation
Gearbox GKR06 is supplied with a breather element as standard.

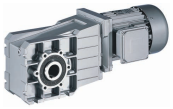

Dimensioning

General information about the data provided in this catalogue

Powers, torques and speeds
The powers, torques and speeds specified in this catalogue are rounded values and are valid under the following conditions:
- Operating time/day = 8 h (100% OT)
- Duty class I for up to 10 switching operations/h
- Mounting positions and designs in this catalogue
- Standard lubricant
- T_{amb} = 20 °C for gearboxes,
  T_{amb} = 40 °C for motors (in accordance with EN 60034)
- Site altitude < = 1000 m amsl
- The selection tables provide the permissible mechanical powers and torques. For notes on the thermal power limit, see chapter drive dimensioning.
- The rated power specified for motors and geared motors applies to operating mode S1 (in accordance with EN 60034).

Under different operating conditions, the values obtained may vary from those listed here.
In the case of extreme operating conditions, please consult your Lenze sales office.

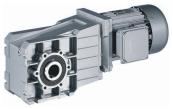

Dimensioning

Thermal power limit

The thermal power limit, defined by the heat balance, limits the permissible gearbox continuous power. It may be less than the mechanical power ratings listed in the selection tables.

The thermal power limit is affected by:
- the churning losses in the lubricant. These are determined by the mounting position and the circumferential speed of the wheels
- the load and the speed
- the ambient conditions: temperature, air circulation, input or dissipation via shafts and the foundation

Please consult your Lenze subsidiary
- if the following input speeds n_1 are exceeded on a continuous basis (continuous is defined as more than 8 h/day):

Motor frame size	Mounting position A, B, E, F	Mounting position C, D
063 ... 100	3000 r/min	3000 r/min
112 ... 132	3000 r/min	1500 r/min
160 ... 225	2000 r/min	1500 r/min

- if the following input speeds n_1 are exceeded:

Motor frame size	Mounting position A, B, E, F	Mounting position C, D
063 ... 100	4000 r/min	3000 r/min
112 ... 132	4000 r/min	2000 r/min
160 ... 225	3000 r/min	1500 r/min

Possible ways of extending the application area

- synthetic lubricant (option)
- shaft sealing rings made from FP material/Viton (option)
- reduction in lubricant quantity
- cooling of the geared motor by means of air convection on the machine/system

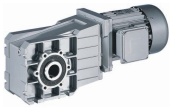

Dimensioning

Load capacity and application factor

Load capacity c of gearbox
Rated value for the load capacity of Lenze geared motors.
- c is the ratio of the permissible rated torque of the gearbox to the rated torque supplied by the drive component (e.g. the built-in Lenze motor).
- The value of c must always be greater than the value of the application factor k calculated for the application.

Application factor k (according to DIN 3990)
Takes into account the influence of temporally variable loads which are actually present during the anticipated operating time of gearboxes and geared motors.
k is determined by:
- the type of load
- the load intensity
- temporal influences

Duty class	Load type
I	Smooth operation, small or light jolts
II	Uneven operation, average jolts
III	Uneven operation, severe jolts and/or alternating load

Application factor k

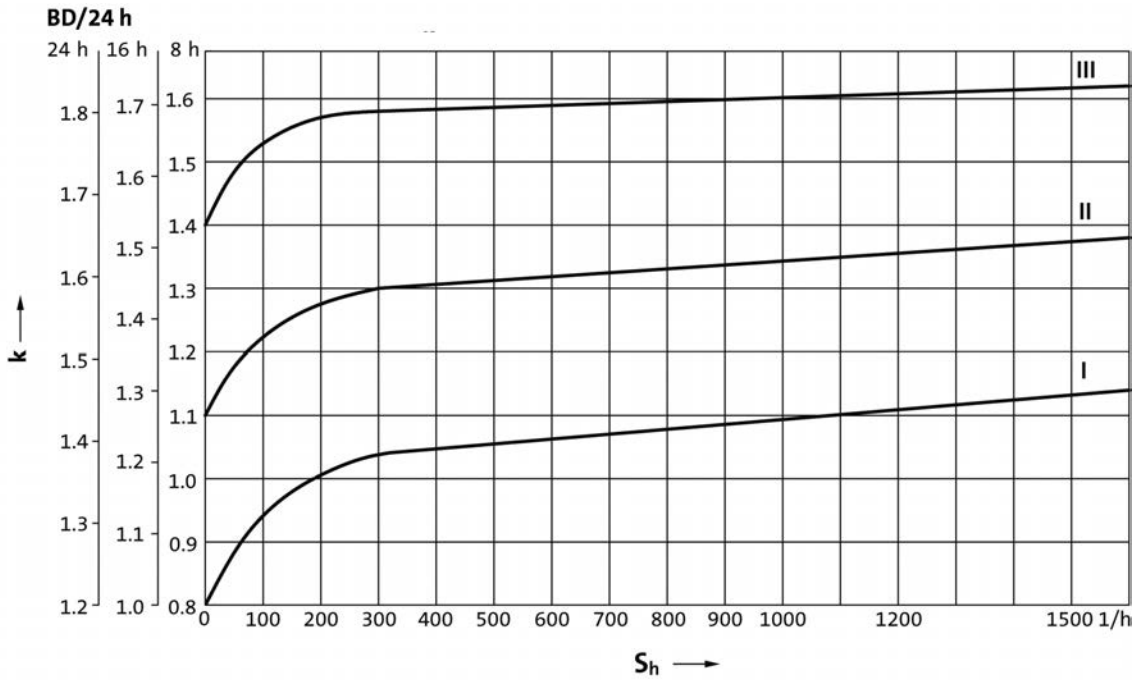

Dimensioning

Torque derating at low motor frequencies

Motor size-dependent torque reduction, taking into account the thermal response during operation on the inverter.

Torque characteristics

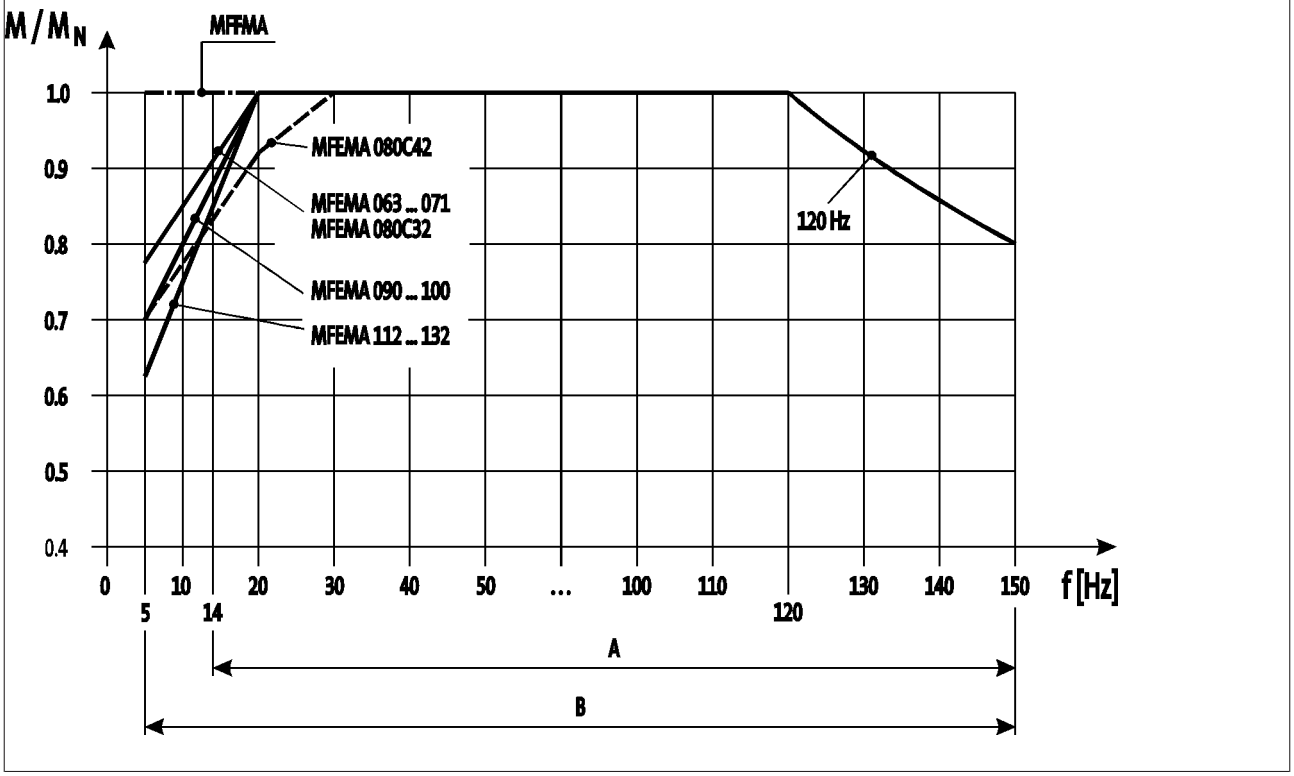

A = Operation with integral fan and brake
B = Operation with integral fan and brake control "Holding current reduction"

► The motor specifications stated in this catalogue for inverter operation apply to operation with a Lenze inverter. If you are uncertain, get in touch with the manufacturer of the inverter to ask whether the device is capable of driving the motor with the stated specifications (e.g. setting range, base frequency).

You can use the Drive Solution Designer for precise drive dimensioning.

The Drive Solution Designer helps you to carry out a fast and high-quality drive dimensioning.
The software includes well-founded and proven knowledge on drive applications and electro-mechanical drive components.

Please contact your Lenze sales office.

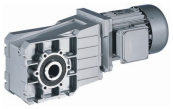

Dimensioning

Notes on the selection tables

The selection tables show the available combinations of gearbox type, number of stages, ratio and motor. The following legend indicates the structure of the selection tables.

Gearbox type

GST helical gearbox



Technical data

Selection tables

Rated power P_N of the drive motor in relation to the rated frequency

► 120 Hz: P_N = 0.55 kW

Speed setting range n_{22}/n_2 = 1 ... 24.0

Speed range of the drive motor n_1 = 143.3 ... 3440 r/min

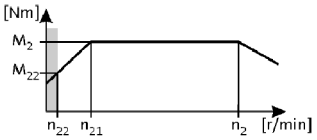

n_{22} [r/min]	n_{21} [r/min]		n_2 [r/min]	M_{22} [Nm]	M_2 [Nm]	c	i			
70	293	-	1680	2.3	3.0	4.5	2.048	GST04-1M□□□063C32	E84AV□□□5514□□0	79
64	268	-	1536	2.6	3.0	3.9	2.240	GST05-1M□□□063C32	E84AV□□□5514□□0	79

Product key of geared motor

Product key of inverter

Ratio i

Page number for dimensions

Speed and torque information
The speed and torque information applies to self-ventilated and forced-ventilated drives. Externally cooled drives can always output the torque M_2 in all the setting ranges. In the case of self-ventilated drives, a reduction to M_{22} is necessary in the lower speed range.

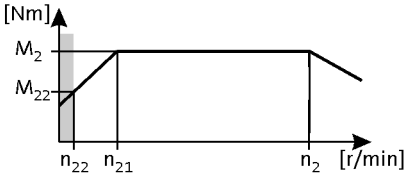

The following applies to self-ventilated geared motors: n_{22} is the minimum speed at which the torque M_{22} is permissible. From n_{21} to n_2, the maximum torque is M_2. The following applies to forced-ventilated geared motors: From the minimum speed n_{22} to n_2, the maximum torque is M_2

The load capacity c of the gearbox c is the ratio of the gearbox's rated torque to the rated torque of the three-phase motor (calculated in respect of its application to the output shaft). c must always be greater than the application factor k determined for the application.

$$c = \frac{M_{2,zul}}{M_{1N} \cdot i \cdot \eta_{Getr}} > k$$

6.8

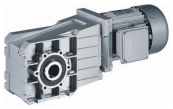

Notes on ordering

We want to be sure that you receive the correct products in good time.

To allow us to achieve this we need:
- your address and your company data
- our product key for the individual products in this catalogue
- your delivery date and delivery address

Ordering procedure
Please use the ordering information checklist to ensure that you provide all the ordering information required for the various products.

The ordering information checklist, the product key, the basic versions, options, mounting position and position of the system blocks will be found in the General – Product key section.

A list of Lenze's worldwide sales offices can be found on the Internet: www.Lenze.com.

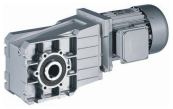

Ordering details checklist

☐ **Offer**

Page __ of __

☐ **Order**

Customer No.

Job No.

Fax No. _____

Sender

Company

Made out by (name)

Street/P.O. Box

Department

P.O. Box, City

Telephone No.

Date Signature

Delivery address (if different)

Street/P.O. Box

Desired delivery date

P.O. Box, City

Dispatching notes

Invoice recipient (if different)

Street/P.O. Box

Postal code, City

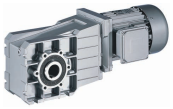

Ordering details checklist

Customer No.

Job No.

Page __

Quantity

Efficiency class ☐ Standard efficiency ☐ High efficiency (IE2)

Rated frequency ☐ 50 Hz ☐ 60 Hz ☐ 87 Hz

Ratio i

GKR ☐☐ – 2 ☐ M ☐ E ☐ V ☐ H ☐ S ☐ A ☐ B ☐ R ☐ K

Motor frame size ☐☐☐C☐☐

Hollow shaft d = ☐ mm

Flange a_2 = ☐ mm

Mounting position A B C D E F

Position of system blocks

Shaft/shrink disc: 0 3 4 8

Flange: 0 3 5 8

Terminal box: 2 3 4 5

Surface and corrosion protection ☐ Without OKS (unpainted)

Options

Special lubricants ☐ CLP HC 320 (synthetic) ☐ CLP HC 220 USDA H1 (for the food industry)

Surface and corrosion protection ☐ OKS-S small) ☐ OKS-M (medium) ☐ OKS-L (high) ☐ OKS-G (primed) ☐

6.8

Accessories

- ☐ Rubber buffer for torque support (only GKR03/04)
- ☐ Torque support for housing foot (only GKR05/06)
- ☐ Torque support for threaded pitch circle
- ☐ 2nd output shaft end
- ☐ Mounting set for hollow-shaft circlip
- ☐ Shrink disc cover
- ☐ Hollow shaft cover, hoseproof

Shaft sealing rings ☐ Viton

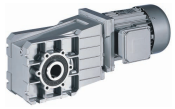

Ordering details checklist

Three-phase AC motors options

Customer No. ☐☐☐☐☐☐☐☐

Job No. ☐☐☐☐☐☐☐☐☐☐

Page __

Motor connection

Terminal box
- ☐ with plug-in connector ICN 6-pin. Adhere to permissible rated motor current 20 A!
- ☐ with plug-in connector ICN 8-pin. Adhere to permissible rated motor current 20 A!
- ☐ with plug-in connector HAN10E. Adhere to permissible rated current 16 A!
- ☐ with plug-in connector HAN-Modular. Adhere to permissible rated current 16 / 40 A!

Cable entry: only with M□□MAXX/LL063 ... 132 or terminal box with plug-in connector in position 1 ☐ 2 ☐ 3 ☐ 4 ☐ 5 ☐

Blower

☐ 1~ ☐ 3~

☐ Terminal box with plug-in connector ICN

Terminal box position 2 ☐ 3 ☐ 4 ☐ 5 ☐

Spring-applied brake

Brake version: ☐ Standard ☐ Longlife

Brake size ☐

Characteristic torque ☐ Nm

Rated voltage AC ☐ DC ☐ ☐ V

Rectifier: Only in the case of AC supply voltage

- ☐ Half-wave rectifier
- ☐ Bridge rectifier
- ☐ Bridge/half-wave rectifier (overexcitation)
- ☐ Bridge/half-wave rectifier (holding current reduction)

Brake options: Manual release lever in position 2 ☐ 3 ☐ 4 ☐ 5 ☐

☐ Low-noise version (Standard in the case of brake with speed/position encoder)

6.8

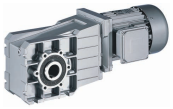

Ordering details checklist

Three-phase AC motors options

Customer No. ☐☐☐☐☐☐☐☐

Job No. ☐☐☐☐☐☐☐☐☐☐

Page __

Speed/position encoder

Resolver	☐ RS1				
Incremental encoder HTL	☐ IG128-24V-H	☐ IG512-24V-H	☐ IG1024-24V-H	☐ IG2048-24V-H	
Incremental encoder TTL		☐ IG512-5V-T	☐ IG1024-5V-T	☐ IG2048-5V-T	
Feedback with ICN connector	☐ IG128-24V-H not possible with plug-in connector!				

Motor protection

☐ PTC ☐ KTY 83-110 ☐ KTY 84-130

Approval

☐ UL/CSA approval: cURus ☐ CCC ☐ China Energy Label

Further options

Indication of supply voltage only for motor frame sizes 112C32 to 225C22

☐ Δ; 400V-50Hz; 460V-60Hz

☐ Y/Δ; 400/230V-50Hz; 460/265V-60Hz (-/400V-87Hz possible in operation with frequency inverter)

☐ Protection cover

☐ 2nd shaft end

☐ Handwheel

☐ Increased centrifugal mass

☐ 2nd nameplate (adhesive nameplate/metal nameplate)

Permissible radial and axial forces at output

Permissible radial force
$F_{rad,per} = \min(f_w \times f_\alpha \times F_{rad,max}$; $f_w \times F_{rad,max}$ at $n_2 \leq 16$ r/min)

Permissible axial force
$F_{ax,per} = F_{ax,max}$ if $F_{rad} = 0$

If F_{rad} **and** $F_{ax} \neq 0$; please contact Lenze.

Application of forces

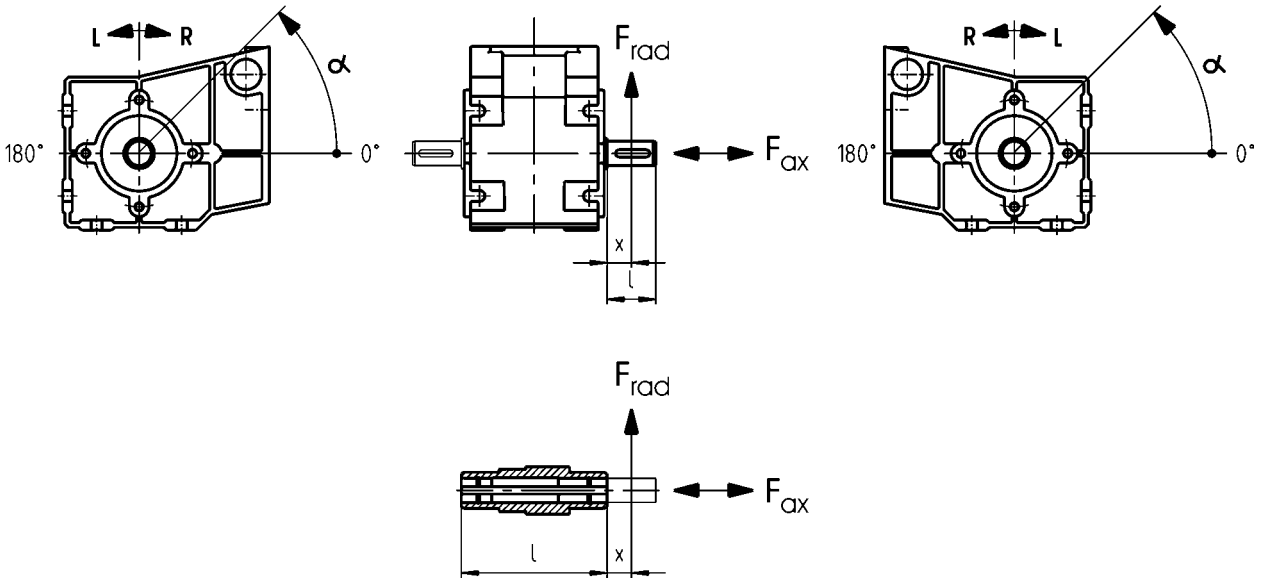

Effective direction factor f_α at output shaft

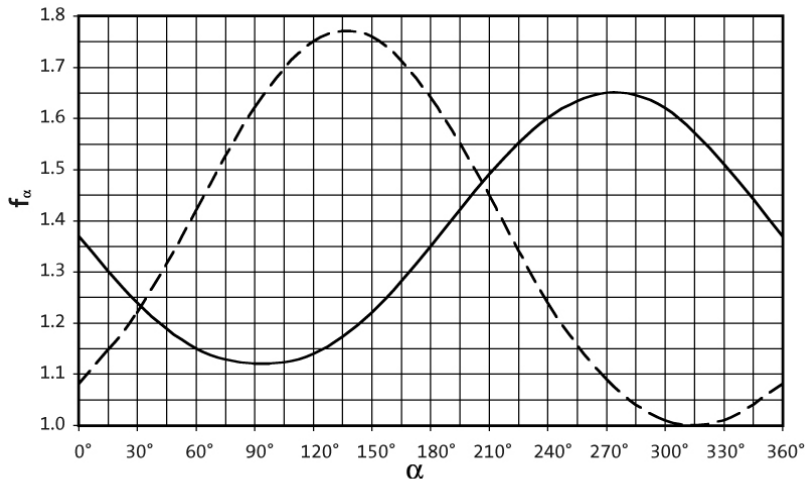

——— Direction of rotation L
— — — Direction of rotation R

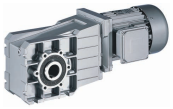

Permissible radial and axial forces at output

Additional load factor f_w at output shaft

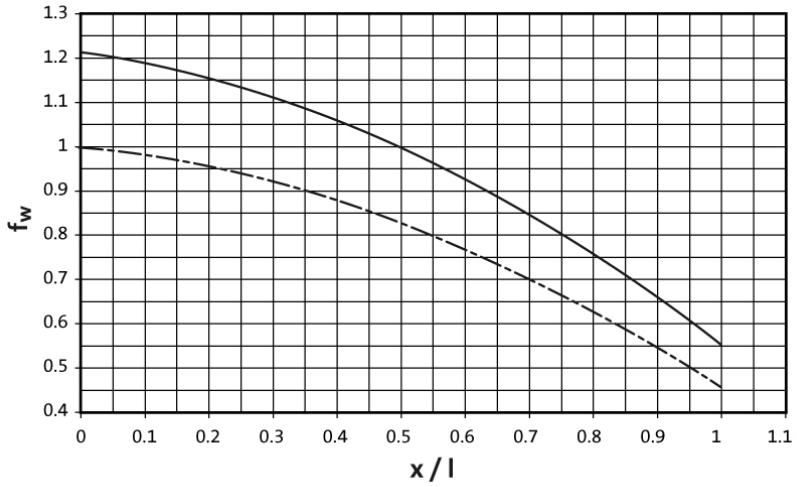

——— Solid shaft (V□□) — · — Hollow shaft (H□□)

GKR□□-2□ H□□

Size	n_2 [r/min]									
Gearbox	1000	630	400	250	160	100	63	40	25	≤16

	Max. radial force, Hollow shaft									
	$F_{rad,max}$	$F_{rad,max}$	$F_{rad,max}$	$F_{rad,max}$	$F_{rad,max}$	$F_{rad,max}$	$F_{rad,max}$	$F_{rad,max}$	$F_{rad,max}$	$F_{rad,max}$
	[N]	[N]	[N]	[N]	[N]	[N]	[N]	[N]	[N]	[N]
GKR03	900	1200	2200	2500	2800	3000	3000	3000	3000	3000
GKR04	1000	2200	2550	3000	3300	3600	3600	3600	3600	3600
GKR05	1500	2250	3800	4500	5100	6200	7400	7800	7800	7800
GKR06	3000	3800	5000	5200	5500	7000	9000	10000	10000	10000

	Max. axial force, Hollow shaft									
	$F_{ax,max}$	$F_{ax,max}$	$F_{ax,max}$	$F_{ax,max}$	$F_{ax,max}$	$F_{ax,max}$	$F_{ax,max}$	$F_{ax,max}$	$F_{ax,max}$	$F_{ax,max}$
	[N]	[N]	[N]	[N]	[N]	[N]	[N]	[N]	[N]	[N]
GKR03	600	800	1000	1100	1250	1400	1400	1400	1400	1400
GKR04	700	1000	1275	1500	1650	1800	1800	1800	1800	1800
GKR05	1100	1500	1900	2200	2500	3100	3700	3900	3900	3900
GKR06	1500	2000	2500	2600	2750	3500	4500	5000	5000	5000

- Application of force F_{rad}: at hollow shaft end face (x = 0)
- $F_{ax,max}$ only valid with F_{rad} = 0
- Neither radial nor axial forces are permissible for the hollow shaft with shrink disc (S□□).

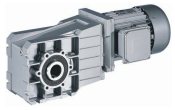

Permissible radial and axial forces at output

GKR□□-2□ V□R

Size	n_2 [r/min]									
Gearbox	1000	630	400	250	160	100	63	40	25	≤16

	Max. radial force, Solid shaft without flange									
	$F_{rad,max}$	$F_{rad,max}$	$F_{rad,max}$	$F_{rad,max}$	$F_{rad,max}$	$F_{rad,max}$	$F_{rad,max}$	$F_{rad,max}$	$F_{rad,max}$	$F_{rad,max}$
	[N]	[N]	[N]	[N]	[N]	[N]	[N]	[N]	[N]	[N]
GKR03	900	1200	1800	2100	2400	2800	3000	3000	3000	3000
GKR04	1000	1800	2100	2500	2700	3000	3000	3000	3000	3000
GKR05	1500	2350	3000	3600	4500	5000	6000	6500	6500	6500
GKR06	2000	2800	4000	4200	4500	5600	7300	8600	9000	9000

	Max. axial force, Solid shaft without flange									
	$F_{ax,max}$	$F_{ax,max}$	$F_{ax,max}$	$F_{ax,max}$	$F_{ax,max}$	$F_{ax,max}$	$F_{ax,max}$	$F_{ax,max}$	$F_{ax,max}$	$F_{ax,max}$
	[N]	[N]	[N]	[N]	[N]	[N]	[N]	[N]	[N]	[N]
GKR03	600	800	1000	1100	1250	1400	1400	1400	1400	1400
GKR04	700	1000	1275	1500	1650	1800	1800	1800	1800	1800
GKR05	1100	1520	1900	2200	2500	3100	3700	3900	3900	3900
GKR06	1500	2000	2500	2600	2750	3500	4500	5000	5000	5000

GKR□□-2□ V□K

Size	n_2 [r/min]									
Gearbox	1000	630	400	250	160	100	63	40	25	≤16

	Max. radial force, Solid shaft with flange									
	$F_{rad,max}$	$F_{rad,max}$	$F_{rad,max}$	$F_{rad,max}$	$F_{rad,max}$	$F_{rad,max}$	$F_{rad,max}$	$F_{rad,max}$	$F_{rad,max}$	$F_{rad,max}$
	[N]	[N]	[N]	[N]	[N]	[N]	[N]	[N]	[N]	[N]
GKR03	900	1200	1800	2100	2400	2800	3000	3000	3000	3000
GKR04	1000	1800	2100	2500	2700	3000	3000	3000	3000	3000
GKR05	2400	3600	5200	6000	6500	6500	6500	6500	6500	6500
GKR06	3000	4000	5500	6200	7000	9000	9000	9000	9000	9000

	Max. axial force, Solid shaft with flange									
	$F_{ax,max}$	$F_{ax,max}$	$F_{ax,max}$	$F_{ax,max}$	$F_{ax,max}$	$F_{ax,max}$	$F_{ax,max}$	$F_{ax,max}$	$F_{ax,max}$	$F_{ax,max}$
	[N]	[N]	[N]	[N]	[N]	[N]	[N]	[N]	[N]	[N]
GKR03	600	800	1000	1100	1250	1400	1400	1400	1400	1400
GKR04	700	1000	1275	1500	1650	1800	1800	1800	1800	1800
GKR05	1100	1500	1900	2200	2500	3100	3700	3900	3900	3900
GKR06	1500	2000	2500	2600	2750	3500	4500	5000	5000	5000

► Application of force F_{rad}: centre of shaft journal (x = l/2)
► $F_{ax,max}$ only valid with F_{rad} = 0

Output backlash in angular minutes

► Backlash ϕ depending on ratio i

GKR03...06-2

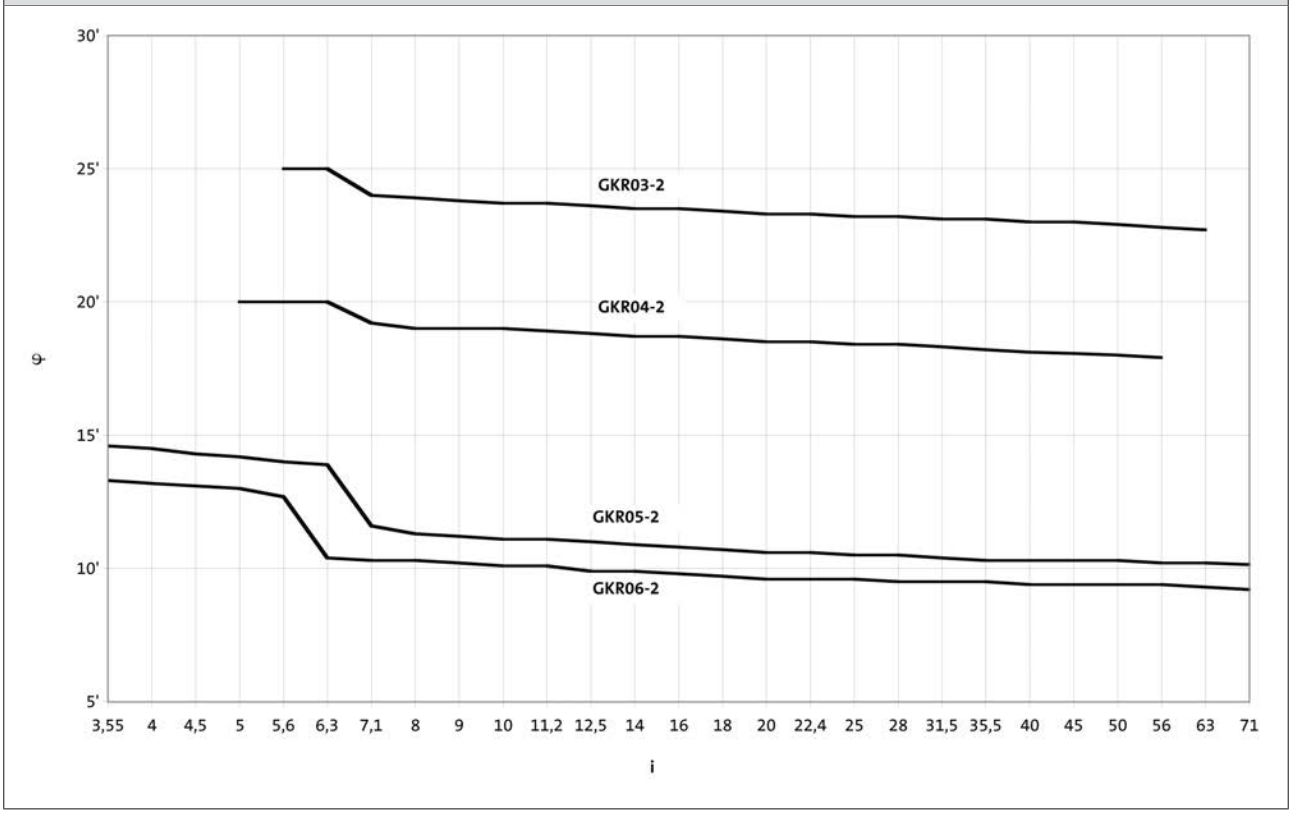

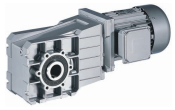

Moments of inertia

GKR□□-2

► Moment of inertia (J) depending on ratio i

Gearbox			GKR03
5.411	J	[kgcm²]	0.307
6.222	J	[kgcm²]	0.276
7.111	J	[kgcm²]	0.196
8.178	J	[kgcm²]	0.178
9.101	J	[kgcm²]	0.134
10.466	J	[kgcm²]	0.123
11.640	J	[kgcm²]	0.086
13.386	J	[kgcm²]	0.079
15.111	J	[kgcm²]	0.059
17.378	J	[kgcm²]	0.055
19.365	J	[kgcm²]	0.038
22.270	J	[kgcm²]	0.054
25.051	J	[kgcm²]	0.025
28.808	J	[kgcm²]	0.023
32.593	J	[kgcm²]	0.016
37.481	J	[kgcm²]	0.015
42.222	J	[kgcm²]	0.010
48.556	J	[kgcm²]	0.009
53.889	J	[kgcm²]	0.006
61.972	J	[kgcm²]	0.006

Gearbox			GKR04
5.185	J	[kgcm²]	0.813
5.963	J	[kgcm²]	0.723
7.111	J	[kgcm²]	0.446
8.178	J	[kgcm²]	0.410
9.101	J	[kgcm²]	3.270
10.466	J	[kgcm²]	0.300
11.449	J	[kgcm²]	0.260
12.698	J	[kgcm²]	1.990
14.603	J	[kgcm²]	0.181
15.556	J	[kgcm²]	1.470
17.889	J	[kgcm²]	0.135
19.556	J	[kgcm²]	0.096
22.489	J	[kgcm²]	0.090
25.185	J	[kgcm²]	0.065
28.963	J	[kgcm²]	0.060
31.919	J	[kgcm²]	0.042
36.707	J	[kgcm²]	0.040
40.000	J	[kgcm²]	0.029
46.000	J	[kgcm²]	0.027
52.698	J	[kgcm²]	0.017
60.603	J	[kgcm²]	0.017

Gearbox			GKR05
3.565	J	[kgcm²]	4.950
4.889	J	[kgcm²]	2.793
6.257	J	[kgcm²]	1.791
6.883	J	[kgcm²]	2.572
7.817	J	[kgcm²]	2.316
9.440	J	[kgcm²]	1.531
10.720	J	[kgcm²]	1.396
12.081	J	[kgcm²]	1.021
13.216	J	[kgcm²]	0.874
13.719	J	[kgcm²]	0.938
15.008	J	[kgcm²]	0.805
16.857	J	[kgcm²]	0.597
19.143	J	[kgcm²]	0.554
20.650	J	[kgcm²]	0.439
23.450	J	[kgcm²]	0.411
26.878	J	[kgcm²]	0.270
30.522	J	[kgcm²]	0.253
33.433	J	[kgcm²]	0.191
37.967	J	[kgcm²]	0.180
43.267	J	[kgcm²]	0.118
49.133	J	[kgcm²]	0.112
52.510	J	[kgcm²]	0.085
59.630	J	[kgcm²]	0.081
67.113	J	[kgcm²]	0.054
76.213	J	[kgcm²]	0.051

Gearbox			GKR06
3.431	J	[kgcm²]	9.576
4.706	J	[kgcm²]	5.607
6.022	J	[kgcm²]	3.658
6.481	J	[kgcm²]	5.112
7.146	J	[kgcm²]	4.539
8.889	J	[kgcm²]	3.233
9.800	J	[kgcm²]	2.929
11.376	J	[kgcm²]	2.209
12.444	J	[kgcm²]	1.890
13.720	J	[kgcm²]	1.734
15.873	J	[kgcm²]	1.321
17.500	J	[kgcm²]	1.225
19.444	J	[kgcm²]	0.991
21.438	J	[kgcm²]	0.928
25.309	J	[kgcm²]	0.632
27.903	J	[kgcm²]	0.594
31.481	J	[kgcm²]	0.457
34.708	J	[kgcm²]	0.432
40.741	J	[kgcm²]	0.284
44.917	J	[kgcm²]	0.270
49.444	J	[kgcm²]	0.207
54.513	J	[kgcm²]	0.197
62.500	J	[kgcm²]	0.134
68.906	J	[kgcm²]	0.127

► The moments of inertia relate to the drive shaft of the gearbox.
► The total moment of inertia is calculated by adding the values of the gearbox, motor and accessories.

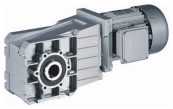

Weights

GKR□□-2M HAR / HBR

			063C32 063C42	071C32 071C42	080C32	080C42	090C32	100C12 100C32	112C22
GKR03	m	[kg]	7						
GKR04	m	[kg]	9	11	16				
GKR05	m	[kg]	14	16	21		28	37	
GKR06	m	[kg]	22	24	29		37	45	58

GKR□□-2M HAK

			063C32 063C42	071C32 071C42	080C32	080C42	090C32	100C12 100C32	112C22
GKR03	m	[kg]	7						
GKR04	m	[kg]	10	12	17				
GKR05	m	[kg]	15	17	22		29	38	
GKR06	m	[kg]	23	25	30		38	46	59

► Weights with oil filling for mounting position A; all values are approximate.
The weights relate to the basic version. Bear in mind that additional weights may be needed, e.g. for motor options.

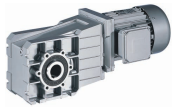

Weights

GKR□□-2M VAR / VBR

			063C32 063C42	071C32 071C42	080C32	080C42	090C32	100C12 100C32	112C22
GKR03	m	[kg]	7						
GKR04	m	[kg]	10	12	17				
GKR05	m	[kg]	15	17	22		29	38	
GKR06	m	[kg]	24	26	30		39	47	60

GKR□□-2M VAK

			063C32 063C42	071C32 071C42	080C32	080C42	090C32	100C12 100C32	112C22
GKR03	m	[kg]	8						
GKR04	m	[kg]	10	12	17				
GKR05	m	[kg]	16	18	23		30	39	
GKR06	m	[kg]	25	27	31		40	48	61

► Weights with oil filling for mounting position A; all values are approximate.
The weights relate to the basic version. Bear in mind that additional weights may be needed, e.g. for motor options.

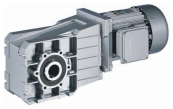

Weights

GKR□□-2M SAR / SBR

	063C32 063C42	071C32 071C42	080C32	080C42	090C32	100C12 100C32	112C22
GKR03 m [kg]	7						
GKR04 m [kg]	10	12	17				
GKR05 m [kg]	14	17	21		29	38	
GKR06 m [kg]	23	25	30		38	46	59

GKR□□-2M SAK

	063C32 063C42	071C32 071C42	080C32	080C42	090C32	100C12 100C32	112C22
GKR03 m [kg]	8						
GKR04 m [kg]	10	12	17				
GKR05 m [kg]	15	18	22		30	39	
GKR06 m [kg]	24	26	31		39	47	60

► Weights with oil filling for mounting position A; all values are approximate.
The weights relate to the basic version. Bear in mind that additional weights may be needed, e.g. for motor options.

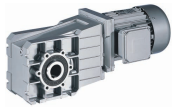

Selection tables

► 120 Hz: P_N = 0.55 kW

n_{22}/n_2 = 1 ... 24.0

n_1 = 143.3 ... 3440 r/min

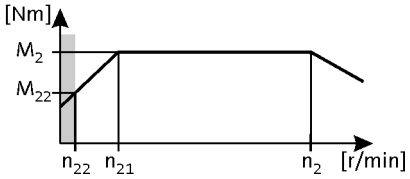

n_{22}	n_{21}		n_2	M_{22}	M_2	c	i			
[r/min]	[r/min]		[r/min]	[Nm]	[Nm]					
16	66	-	378	10.0	13	2.6	9.101	GKR03-2M□□□063C32	E84AV□□□5514□□0	42
16	66	-	378	10.0	13	4.5	9.101	GKR04-2M□□□063C32	E84AV□□□5514□□0	42
14	57	-	329	12	15	2.2	10.466	GKR03-2M□□□063C32	E84AV□□□5514□□0	42
14	57	-	329	12	15	4.4	10.466	GKR04-2M□□□063C32	E84AV□□□5514□□0	42
13	52	-	301	13	17	4.1	11.449	GKR04-2M□□□063C32	E84AV□□□5514□□0	42
12	52	-	296	13	17	2.0	11.640	GKR03-2M□□□063C32	E84AV□□□5514□□0	42
11	47	-	271	14	18	3.7	12.698	GKR04-2M□□□063C32	E84AV□□□5514□□0	42
11	45	-	260	15	19	3.9	13.216	GKR05-2M□□□063C32	E84AV□□□5514□□0	42
11	45	-	257	15	19	1.8	13.386	GKR03-2M□□□063C32	E84AV□□□5514□□0	42
9.8	41	-	236	16	21	3.2	14.603	GKR04-2M□□□063C32	E84AV□□□5514□□0	42
9.6	40	-	229	17	22	3.9	15.008	GKR05-2M□□□063C32	E84AV□□□5514□□0	42
9.5	40	-	228	17	22	1.6	15.111	GKR03-2M□□□063C32	E84AV□□□5514□□0	42
9.2	39	-	221	17	23	3.0	15.556	GKR04-2M□□□063C32	E84AV□□□5514□□0	42
8.3	35	-	198	19	25	1.4	17.378	GKR03-2M□□□063C32	E84AV□□□5514□□0	42
8.0	34	-	192	20	26	2.6	17.889	GKR04-2M□□□063C32	E84AV□□□5514□□0	42
7.4	31	-	178	21	28	1.2	19.365	GKR03-2M□□□063C32	E84AV□□□5514□□0	42
7.3	31	-	176	22	28	2.4	19.556	GKR04-2M□□□063C32	E84AV□□□5514□□0	42
6.4	27	-	155	24	32	1.1	22.270	GKR03-2M□□□063C32	E84AV□□□5514□□0	42
6.4	27	-	153	25	33	2.1	22.489	GKR04-2M□□□063C32	E84AV□□□5514□□0	42
5.7	24	-	137	28	36	1.1	25.051	GKR03-2M□□□063C32	E84AV□□□5514□□0	42
5.7	24	-	137	28	37	2.1	25.185	GKR04-2M□□□063C32	E84AV□□□5514□□0	42
5.0	21	-	119	32	42	0.9	28.808	GKR03-2M□□□063C32	E84AV□□□5514□□0	42
5.0	21	-	119	32	42	1.8	28.963	GKR04-2M□□□063C32	E84AV□□□5514□□0	42
4.7	20	-	113	34	44	4.2	30.522	GKR05-2M□□□063C32	E84AV□□□5514□□0	42
4.5	19	-	108	35	46	1.7	31.919	GKR04-2M□□□063C32	E84AV□□□5514□□0	42
3.9	16	-	94	40	53	1.5	36.707	GKR04-2M□□□063C32	E84AV□□□5514□□0	42
3.6	15	-	86	44	58	1.2	40.000	GKR04-2M□□□063C32	E84AV□□□5514□□0	42
3.1	13	-	75	51	67	1.3	46.000	GKR04-2M□□□063C32	E84AV□□□5514□□0	42
2.9	12	-	70	54	71	3.2	49.133	GKR05-2M□□□063C32	E84AV□□□5514□□0	42
2.7	11	-	66	58	76	3.0	52.510	GKR05-2M□□□063C32	E84AV□□□5514□□0	42
2.6	11	-	63	60	79	3.5	54.513	GKR06-2M□□□063C32	E84AV□□□5514□□0	42
2.4	10	-	58	66	87	2.7	59.630	GKR05-2M□□□063C32	E84AV□□□5514□□0	42
2.3	9.6	-	55	69	91	2.8	62.500	GKR06-2M□□□063C32	E84AV□□□5514□□0	42
2.1	8.9	-	51	74	97	1.5	67.113	GKR05-2M□□□063C32	E84AV□□□5514□□0	42
2.1	8.7	-	50	76	100	2.8	68.906	GKR06-2M□□□063C32	E84AV□□□5514□□0	42
1.9	7.9	-	45	84	111	1.5	76.213	GKR05-2M□□□063C32	E84AV□□□5514□□0	42

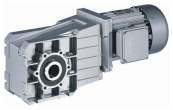

Selection tables

► 120 Hz: P_N = 0.75 kW

n_{22}/n_2 = 1 ... 24.0

n_1 = 141.7 ... 3400 r/min

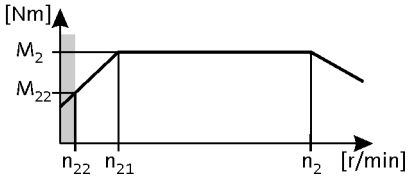

n_{22}	n_{21}		n_2	M_{22}	M_2	c	i			
[r/min]	[r/min]		[r/min]	[Nm]	[Nm]					
16	66	-	374	14	18	1.9	9.101	GKR03-2M□□□063C42	E84AV□□□7514□□0	42
16	66	-	374	14	18	3.3	9.101	GKR04-2M□□□063C42	E84AV□□□7514□□0	42
14	57	-	325	16	21	1.6	10.466	GKR03-2M□□□063C42	E84AV□□□7514□□0	42
14	57	-	325	16	21	3.2	10.466	GKR04-2M□□□063C42	E84AV□□□7514□□0	42
12	52	-	297	17	23	3.0	11.449	GKR04-2M□□□063C42	E84AV□□□7514□□0	42
12	52	-	292	17	23	1.5	11.640	GKR03-2M□□□063C42	E84AV□□□7514□□0	42
11	47	-	268	19	25	2.7	12.698	GKR04-2M□□□063C42	E84AV□□□7514□□0	42
11	45	-	257	20	26	2.9	13.216	GKR05-2M□□□063C42	E84AV□□□7514□□0	42
11	45	-	254	20	27	1.3	13.386	GKR03-2M□□□063C42	E84AV□□□7514□□0	42
9.7	41	-	233	22	29	2.3	14.603	GKR04-2M□□□063C42	E84AV□□□7514□□0	42
9.4	40	-	227	23	30	2.9	15.008	GKR05-2M□□□063C42	E84AV□□□7514□□0	42
9.4	40	-	225	23	30	1.1	15.111	GKR03-2M□□□063C42	E84AV□□□7514□□0	42
9.1	39	-	219	23	31	2.2	15.556	GKR04-2M□□□063C42	E84AV□□□7514□□0	42
8.2	35	-	196	26	35	1.0	17.378	GKR03-2M□□□063C42	E84AV□□□7514□□0	42
7.9	34	-	190	27	36	1.9	17.889	GKR04-2M□□□063C42	E84AV□□□7514□□0	42
7.2	31	-	174	29	39	1.8	19.556	GKR04-2M□□□063C42	E84AV□□□7514□□0	42
6.3	27	-	151	34	45	1.5	22.489	GKR04-2M□□□063C42	E84AV□□□7514□□0	42
5.6	24	-	135	38	50	1.5	25.185	GKR04-2M□□□063C42	E84AV□□□7514□□0	42
5.3	22	-	127	40	54	3.1	26.878	GKR05-2M□□□063C42	E84AV□□□7514□□0	42
4.9	21	-	117	43	58	1.3	28.963	GKR04-2M□□□063C42	E84AV□□□7514□□0	42
4.6	20	-	111	46	61	3.1	30.522	GKR05-2M□□□063C42	E84AV□□□7514□□0	42
4.4	19	-	107	48	64	1.2	31.919	GKR04-2M□□□063C42	E84AV□□□7514□□0	42
4.2	18	-	102	50	67	2.6	33.433	GKR05-2M□□□063C42	E84AV□□□7514□□0	42
3.9	16	-	93	55	74	1.1	36.707	GKR04-2M□□□063C42	E84AV□□□7514□□0	42
3.7	16	-	90	57	76	2.6	37.967	GKR05-2M□□□063C42	E84AV□□□7514□□0	42
3.5	15	-	84	61	82	2.9	40.741	GKR06-2M□□□063C42	E84AV□□□7514□□0	42
3.3	14	-	79	65	87	2.6	43.267	GKR05-2M□□□063C42	E84AV□□□7514□□0	42
3.2	13	-	76	67	90	2.9	44.917	GKR06-2M□□□063C42	E84AV□□□7514□□0	42
3.1	13	-	74	69	92	0.9	46.000	GKR04-2M□□□063C42	E84AV□□□7514□□0	42
2.9	12	-	69	74	98	2.3	49.133	GKR05-2M□□□063C42	E84AV□□□7514□□0	42
2.9	12	-	69	74	99	2.5	49.444	GKR06-2M□□□063C42	E84AV□□□7514□□0	42
2.7	11	-	65	79	105	2.2	52.510	GKR05-2M□□□063C42	E84AV□□□7514□□0	42
2.6	11	-	62	82	109	2.5	54.513	GKR06-2M□□□063C42	E84AV□□□7514□□0	42
2.4	10	-	57	89	119	1.9	59.630	GKR05-2M□□□063C42	E84AV□□□7514□□0	42
2.3	9.6	-	54	94	125	2.0	62.500	GKR06-2M□□□063C42	E84AV□□□7514□□0	42
2.1	8.9	-	51	101	134	1.1	67.113	GKR05-2M□□□063C42	E84AV□□□7514□□0	42
2.1	8.7	-	49	103	138	2.0	68.906	GKR06-2M□□□063C42	E84AV□□□7514□□0	42
1.9	7.9	-	45	114	153	1.1	76.213	GKR05-2M□□□063C42	E84AV□□□7514□□0	42

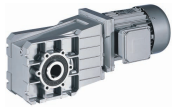

Selection tables

► 120 Hz: P_N = 1.10 kW

n_{22}/n_2 = 1 ... 24.0

n_1 = 145.4 ... 3490 r/min

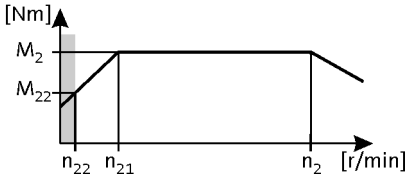

n_{22} [r/min]	n_{21} [r/min]		n_2 [r/min]	M_{22} [Nm]	M_2 [Nm]	c	i			
23	96	-	558	14	18	4.2	6.257	GKR05-2M□□□071C32	E84AV□□□1124□□0	42
16	66	-	384	20	26	2.4	9.101	GKR04-2M□□□071C32	E84AV□□□1124□□0	42
14	57	-	334	23	30	2.2	10.466	GKR04-2M□□□071C32	E84AV□□□1124□□0	42
13	52	-	305	25	33	2.1	11.449	GKR04-2M□□□071C32	E84AV□□□1124□□0	42
12	47	-	275	28	36	1.9	12.698	GKR04-2M□□□071C32	E84AV□□□1124□□0	42
11	45	-	264	29	38	4.2	13.216	GKR05-2M□□□071C32	E84AV□□□1124□□0	42
10	41	-	239	32	42	1.6	14.603	GKR04-2M□□□071C32	E84AV□□□1124□□0	42
9.7	40	-	233	33	43	3.9	15.008	GKR05-2M□□□071C32	E84AV□□□1124□□0	42
9.4	39	-	224	34	45	1.5	15.556	GKR04-2M□□□071C32	E84AV□□□1124□□0	42
8.1	34	-	195	39	51	1.3	17.889	GKR04-2M□□□071C32	E84AV□□□1124□□0	42
7.4	31	-	179	43	56	1.2	19.556	GKR04-2M□□□071C32	E84AV□□□1124□□0	42
7.0	29	-	169	45	59	3.1	20.650	GKR05-2M□□□071C32	E84AV□□□1124□□0	42
6.5	27	-	155	49	64	1.1	22.489	GKR04-2M□□□071C32	E84AV□□□1124□□0	42
6.2	26	-	149	52	67	2.7	23.450	GKR05-2M□□□071C32	E84AV□□□1124□□0	42
5.8	24	-	139	55	72	1.1	25.185	GKR04-2M□□□071C32	E84AV□□□1124□□0	42
5.4	22	-	130	59	77	2.7	26.878	GKR05-2M□□□071C32	E84AV□□□1124□□0	42
5.0	21	-	121	64	83	0.9	28.963	GKR04-2M□□□071C32	E84AV□□□1124□□0	42
4.8	20	-	114	67	87	2.4	30.522	GKR05-2M□□□071C32	E84AV□□□1124□□0	42
4.6	19	-	111	69	90	3.4	31.481	GKR06-2M□□□071C32	E84AV□□□1124□□0	42
4.4	18	-	104	73	96	2.2	33.433	GKR05-2M□□□071C32	E84AV□□□1124□□0	42
3.8	16	-	92	83	109	1.9	37.967	GKR05-2M□□□071C32	E84AV□□□1124□□0	42
3.4	14	-	81	95	124	1.8	43.267	GKR05-2M□□□071C32	E84AV□□□1124□□0	42
3.0	12	-	71	108	141	1.6	49.133	GKR05-2M□□□071C32	E84AV□□□1124□□0	42
2.9	12	-	71	109	141	2.8	49.444	GKR06-2M□□□071C32	E84AV□□□1124□□0	42
2.8	11	-	67	115	150	1.5	52.510	GKR05-2M□□□071C32	E84AV□□□1124□□0	42
2.7	11	-	64	120	156	2.7	54.513	GKR06-2M□□□071C32	E84AV□□□1124□□0	42
2.4	10	-	59	131	171	1.3	59.630	GKR05-2M□□□071C32	E84AV□□□1124□□0	42
2.3	9.6	-	56	137	179	1.6	62.500	GKR06-2M□□□071C32	E84AV□□□1124□□0	42
2.1	8.7	-	51	151	197	1.6	68.906	GKR06-2M□□□071C32	E84AV□□□1124□□0	42

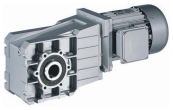

Selection tables

► 120 Hz: P_N = 1.50 kW

n_{22}/n_2 = 1 ... 24.0

n_1 = 143.8 ... 3450 r/min

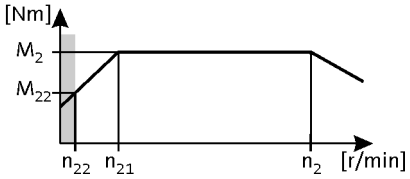

n_{22}	n_{21}		n_2	M_{22}	M_2	c	i			
[r/min]	[r/min]		[r/min]	[Nm]	[Nm]					
23	96	-	551	19	25	3.1	6.257	GKR05-2M□□□071C42	E84AV□□□1524□□0	42
16	66	-	379	27	36	1.8	9.101	GKR04-2M□□□071C42	E84AV□□□1524□□0	42
14	57	-	330	31	41	1.6	10.466	GKR04-2M□□□071C42	E84AV□□□1524□□0	42
13	52	-	301	34	45	1.5	11.449	GKR04-2M□□□071C42	E84AV□□□1524□□0	42
12	50	-	286	36	48	3.1	12.081	GKR05-2M□□□071C42	E84AV□□□1524□□0	42
11	47	-	272	38	50	1.4	12.698	GKR04-2M□□□071C42	E84AV□□□1524□□0	42
11	45	-	261	40	52	3.1	13.216	GKR05-2M□□□071C42	E84AV□□□1524□□0	42
11	44	-	252	41	54	3.0	13.719	GKR05-2M□□□071C42	E84AV□□□1524□□0	42
9.8	41	-	236	44	58	1.2	14.603	GKR04-2M□□□071C42	E84AV□□□1524□□0	42
9.6	40	-	230	45	59	2.9	15.008	GKR05-2M□□□071C42	E84AV□□□1524□□0	42
9.2	39	-	222	47	61	1.1	15.556	GKR04-2M□□□071C42	E84AV□□□1524□□0	42
9.1	38	-	217	48	63	3.1	15.873	GKR06-2M□□□071C42	E84AV□□□1524□□0	42
8.5	36	-	205	51	67	2.7	16.857	GKR05-2M□□□071C42	E84AV□□□1524□□0	42
8.2	34	-	197	52	69	3.1	17.500	GKR06-2M□□□071C42	E84AV□□□1524□□0	42
8.0	34	-	193	54	71	1.0	17.889	GKR04-2M□□□071C42	E84AV□□□1524□□0	42
7.5	31	-	180	57	76	2.4	19.143	GKR05-2M□□□071C42	E84AV□□□1524□□0	42
7.0	29	-	167	62	82	2.2	20.650	GKR05-2M□□□071C42	E84AV□□□1524□□0	42
6.1	26	-	147	70	93	2.0	23.450	GKR05-2M□□□071C42	E84AV□□□1524□□0	42
5.7	24	-	136	76	100	2.9	25.309	GKR06-2M□□□071C42	E84AV□□□1524□□0	42
5.4	22	-	128	81	106	1.9	26.878	GKR05-2M□□□071C42	E84AV□□□1524□□0	42
5.2	22	-	124	84	110	2.9	27.903	GKR06-2M□□□071C42	E84AV□□□1524□□0	42
4.7	20	-	113	91	120	1.7	30.522	GKR05-2M□□□071C42	E84AV□□□1524□□0	42
4.6	19	-	110	94	124	2.4	31.481	GKR06-2M□□□071C42	E84AV□□□1524□□0	42
4.3	18	-	103	100	132	1.6	33.433	GKR05-2M□□□071C42	E84AV□□□1524□□0	42
4.1	17	-	99	104	137	2.4	34.708	GKR06-2M□□□071C42	E84AV□□□1524□□0	42
3.8	16	-	91	114	150	1.4	37.967	GKR05-2M□□□071C42	E84AV□□□1524□□0	42
3.5	15	-	85	122	161	2.5	40.741	GKR06-2M□□□071C42	E84AV□□□1524□□0	42
3.3	14	-	80	130	171	1.3	43.267	GKR05-2M□□□071C42	E84AV□□□1524□□0	42
3.2	13	-	77	135	177	2.4	44.917	GKR06-2M□□□071C42	E84AV□□□1524□□0	42
2.9	12	-	70	147	194	1.2	49.133	GKR05-2M□□□071C42	E84AV□□□1524□□0	42
2.9	12	-	70	148	195	2.0	49.444	GKR06-2M□□□071C42	E84AV□□□1524□□0	42
2.7	11	-	66	157	207	1.1	52.510	GKR05-2M□□□071C42	E84AV□□□1524□□0	42
2.6	11	-	63	163	215	2.0	54.513	GKR06-2M□□□071C42	E84AV□□□1524□□0	42
2.4	10	-	58	179	235	1.0	59.630	GKR05-2M□□□071C42	E84AV□□□1524□□0	42
2.3	9.6	-	55	187	247	1.2	62.500	GKR06-2M□□□071C42	E84AV□□□1524□□0	42
2.1	8.7	-	50	206	272	1.2	68.906	GKR06-2M□□□071C42	E84AV□□□1524□□0	42

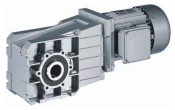

Selection tables

► 120 Hz: P_N = 2.20 kW

n_{22}/n_2 = 1 ... 24.0

n_1 = 145.8 ... 3500 r/min

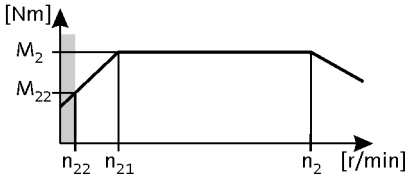

n_{22}	n_{21}		n_2	M_{22}	M_2	c	i			
[r/min]	[r/min]		[r/min]	[Nm]	[Nm]					
23	96	-	559	27	36	3.3	6.257	GKR05-2M□□□080C32	E84AV□□□2224□□0	42
16	66	-	385	39	52	1.2	9.101	GKR04-2M□□□080C32	E84AV□□□2224□□0	42
14	57	-	334	45	60	1.1	10.466	GKR04-2M□□□080C32	E84AV□□□2224□□0	42
13	52	-	306	49	65	1.0	11.449	GKR04-2M□□□080C32	E84AV□□□2224□□0	42
12	50	-	290	52	69	2.3	12.081	GKR05-2M□□□080C32	E84AV□□□2224□□0	42
12	47	-	276	54	72	0.9	12.698	GKR04-2M□□□080C32	E84AV□□□2224□□0	42
11	45	-	265	57	75	2.1	13.216	GKR05-2M□□□080C32	E84AV□□□2224□□0	42
11	44	-	255	59	78	2.1	13.719	GKR05-2M□□□080C32	E84AV□□□2224□□0	42
9.7	40	-	233	64	86	2.0	15.008	GKR05-2M□□□080C32	E84AV□□□2224□□0	42
8.7	36	-	208	72	96	1.9	16.857	GKR05-2M□□□080C32	E84AV□□□2224□□0	42
7.6	31	-	183	82	109	1.7	19.143	GKR05-2M□□□080C32	E84AV□□□2224□□0	42
7.5	31	-	180	83	111	3.1	19.444	GKR06-2M□□□080C32	E84AV□□□2224□□0	42
7.1	29	-	170	88	118	1.5	20.650	GKR05-2M□□□080C32	E84AV□□□2224□□0	42
6.8	28	-	163	92	122	2.8	21.438	GKR06-2M□□□080C32	E84AV□□□2224□□0	42
6.2	26	-	149	100	134	1.4	23.450	GKR05-2M□□□080C32	E84AV□□□2224□□0	42
5.8	24	-	138	108	144	2.7	25.309	GKR06-2M□□□080C32	E84AV□□□2224□□0	42
5.4	22	-	130	115	153	1.3	26.878	GKR05-2M□□□080C32	E84AV□□□2224□□0	42
5.2	22	-	125	119	159	2.4	27.903	GKR06-2M□□□080C32	E84AV□□□2224□□0	42
4.8	20	-	115	131	174	1.2	30.522	GKR05-2M□□□080C32	E84AV□□□2224□□0	42
4.6	19	-	111	135	180	2.1	31.481	GKR06-2M□□□080C32	E84AV□□□2224□□0	42
4.4	18	-	105	143	191	1.1	33.433	GKR05-2M□□□080C32	E84AV□□□2224□□0	42
4.2	17	-	101	148	198	1.9	34.708	GKR06-2M□□□080C32	E84AV□□□2224□□0	42
3.8	16	-	92	162	217	0.9	37.967	GKR05-2M□□□080C32	E84AV□□□2224□□0	42
3.6	15	-	86	174	232	1.8	40.741	GKR06-2M□□□080C32	E84AV□□□2224□□0	42
3.3	13	-	78	192	256	1.7	44.917	GKR06-2M□□□080C32	E84AV□□□2224□□0	42
3.0	12	-	71	211	282	1.5	49.444	GKR06-2M□□□080C32	E84AV□□□2224□□0	42
2.7	11	-	64	233	311	1.4	54.513	GKR06-2M□□□080C32	E84AV□□□2224□□0	42

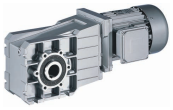

Selection tables

► 120 Hz: P_N = 3.00 kW

n_{22}/n_2 = 1 ... 24.0

n_1 = 145.0 ... 3480 r/min

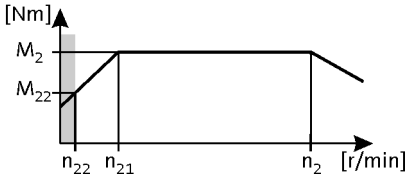

n_{22} [r/min]	n_{21} [r/min]		n_2 [r/min]	M_{22} [Nm]	M_2 [Nm]	c	i			
24	149	-	578	35	47	3.1	6.022	GKR06-2M□□□080C42	E84AV□□□3024□□0	42
23	144	-	556	37	49	2.4	6.257	GKR05-2M□□□080C42	E84AV□□□3024□□0	42
13	79	-	306	67	89	3.1	11.376	GKR06-2M□□□080C42	E84AV□□□3024□□0	42
12	75	-	288	71	95	1.7	12.081	GKR05-2M□□□080C42	E84AV□□□3024□□0	42
12	72	-	280	73	97	3.1	12.444	GKR06-2M□□□080C42	E84AV□□□3024□□0	42
11	68	-	263	78	103	1.6	13.216	GKR05-2M□□□080C42	E84AV□□□3024□□0	42
11	66	-	254	81	107	1.5	13.719	GKR05-2M□□□080C42	E84AV□□□3024□□0	42
11	66	-	254	81	107	3.0	13.720	GKR06-2M□□□080C42	E84AV□□□3024□□0	42
9.7	60	-	232	88	117	1.4	15.008	GKR05-2M□□□080C42	E84AV□□□3024□□0	42
9.1	57	-	219	93	124	2.7	15.873	GKR06-2M□□□080C42	E84AV□□□3024□□0	42
8.6	53	-	206	99	132	1.4	16.857	GKR05-2M□□□080C42	E84AV□□□3024□□0	42
8.3	51	-	199	103	137	2.5	17.500	GKR06-2M□□□080C42	E84AV□□□3024□□0	42
7.6	47	-	182	112	150	1.2	19.143	GKR05-2M□□□080C42	E84AV□□□3024□□0	42
7.5	46	-	179	114	152	2.2	19.444	GKR06-2M□□□080C42	E84AV□□□3024□□0	42
7.0	44	-	169	121	162	1.1	20.650	GKR05-2M□□□080C42	E84AV□□□3024□□0	42
6.8	42	-	162	126	168	2.0	21.438	GKR06-2M□□□080C42	E84AV□□□3024□□0	42
6.2	38	-	148	138	183	1.0	23.450	GKR05-2M□□□080C42	E84AV□□□3024□□0	42
5.7	36	-	138	149	198	2.0	25.309	GKR06-2M□□□080C42	E84AV□□□3024□□0	42
5.4	34	-	130	158	210	1.0	26.878	GKR05-2M□□□080C42	E84AV□□□3024□□0	42
5.2	32	-	125	164	218	1.8	27.903	GKR06-2M□□□080C42	E84AV□□□3024□□0	42
4.6	29	-	111	185	246	1.6	31.481	GKR06-2M□□□080C42	E84AV□□□3024□□0	42
4.2	26	-	100	204	272	1.4	34.708	GKR06-2M□□□080C42	E84AV□□□3024□□0	42
3.6	22	-	85	239	319	1.3	40.741	GKR06-2M□□□080C42	E84AV□□□3024□□0	42
3.2	20	-	78	264	351	1.2	44.917	GKR06-2M□□□080C42	E84AV□□□3024□□0	42
2.9	18	-	70	290	387	1.1	49.444	GKR06-2M□□□080C42	E84AV□□□3024□□0	42
2.7	17	-	64	320	426	1.0	54.513	GKR06-2M□□□080C42	E84AV□□□3024□□0	42

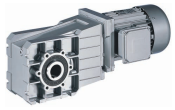

Selection tables

► 120 Hz: P_N = 4.00 kW

n_{22}/n_2 = 1 ... 24.0

n_1 = 145.0 ... 3480 r/min

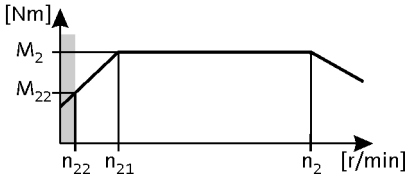

n_{22} [r/min]	n_{21} [r/min]		n_2 [r/min]	M_{22} [Nm]	M_2 [Nm]	c	i			
24	100	-	578	44	63	2.9	6.022	GKR06-2M□□□090C32	E84AV□□□4024□□0	42
23	96	-	556	46	65	1.8	6.257	GKR05-2M□□□090C32	E84AV□□□4024□□0	42
13	53	-	306	83	119	2.8	11.376	GKR06-2M□□□090C32	E84AV□□□4024□□0	42
12	50	-	288	88	126	1.2	12.081	GKR05-2M□□□090C32	E84AV□□□4024□□0	42
12	48	-	280	91	130	2.6	12.444	GKR06-2M□□□090C32	E84AV□□□4024□□0	42
11	45	-	263	97	138	1.2	13.216	GKR05-2M□□□090C32	E84AV□□□4024□□0	42
11	44	-	254	100	143	1.1	13.719	GKR05-2M□□□090C32	E84AV□□□4024□□0	42
11	44	-	254	100	143	2.3	13.720	GKR06-2M□□□090C32	E84AV□□□4024□□0	42
9.7	40	-	232	110	157	1.1	15.008	GKR05-2M□□□090C32	E84AV□□□4024□□0	42
9.1	38	-	219	116	166	2.1	15.873	GKR06-2M□□□090C32	E84AV□□□4024□□0	42
8.6	36	-	206	123	176	1.0	16.857	GKR05-2M□□□090C32	E84AV□□□4024□□0	42
8.3	34	-	199	128	183	1.9	17.500	GKR06-2M□□□090C32	E84AV□□□4024□□0	42
7.6	31	-	182	140	200	0.9	19.143	GKR05-2M□□□090C32	E84AV□□□4024□□0	42
7.5	31	-	179	142	203	1.7	19.444	GKR06-2M□□□090C32	E84AV□□□4024□□0	42
6.8	28	-	162	157	224	1.5	21.438	GKR06-2M□□□090C32	E84AV□□□4024□□0	42
5.7	24	-	138	185	264	1.5	25.309	GKR06-2M□□□090C32	E84AV□□□4024□□0	42
5.2	22	-	125	204	291	1.3	27.903	GKR06-2M□□□090C32	E84AV□□□4024□□0	42
4.6	19	-	111	230	328	1.2	31.481	GKR06-2M□□□090C32	E84AV□□□4024□□0	42
4.2	17	-	100	253	362	1.1	34.708	GKR06-2M□□□090C32	E84AV□□□4024□□0	42
3.6	15	-	85	297	425	1.0	40.741	GKR06-2M□□□090C32	E84AV□□□4024□□0	42
3.2	13	-	78	328	468	0.9	44.917	GKR06-2M□□□090C32	E84AV□□□4024□□0	42

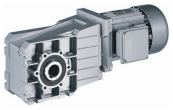

Selection tables

► 120 Hz: P_N = 5.50 kW

n_{22}/n_2 = 1 ... 24.0

n_1 = 146.9 ... 3525 r/min

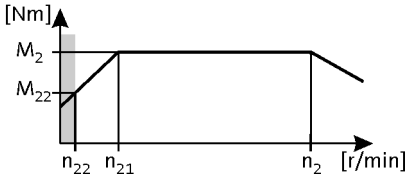

n_{22} [r/min]	n_{21} [r/min]		n_2 [r/min]	M_{22} [Nm]	M_2 [Nm]	c	i			
24	100	-	585	60	85	2.5	6.022	GKR06-2M□□□100C12	E84AV□□□5524□□0	42
24	96	-	563	62	89	1.3	6.257	GKR05-2M□□□100C12	E84AV□□□5524□□0	42
13	53	-	310	113	161	2.0	11.376	GKR06-2M□□□100C12	E84AV□□□5524□□0	42
12	50	-	292	120	171	0.9	12.081	GKR05-2M□□□100C12	E84AV□□□5524□□0	42
12	48	-	283	123	176	1.9	12.444	GKR06-2M□□□100C12	E84AV□□□5524□□0	42
11	44	-	257	136	194	1.7	13.720	GKR06-2M□□□100C12	E84AV□□□5524□□0	42
9.3	38	-	222	157	225	1.5	15.873	GKR06-2M□□□100C12	E84AV□□□5524□□0	42
8.4	34	-	201	173	248	1.4	17.500	GKR06-2M□□□100C12	E84AV□□□5524□□0	42
7.6	31	-	181	193	275	1.2	19.444	GKR06-2M□□□100C12	E84AV□□□5524□□0	42
6.9	28	-	164	212	304	1.1	21.438	GKR06-2M□□□100C12	E84AV□□□5524□□0	42
5.8	24	-	139	251	358	1.1	25.309	GKR06-2M□□□100C12	E84AV□□□5524□□0	42
5.3	22	-	126	277	395	1.0	27.903	GKR06-2M□□□100C12	E84AV□□□5524□□0	42

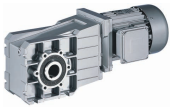

Selection tables

► 120 Hz: P_N = 7.50 kW

n_{22}/n_2 = 1 ... 24.0

n_1 = 146.5 ... 3515 r/min

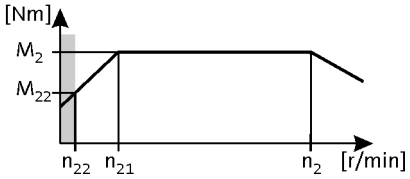

n_{22} [r/min]	n_{21} [r/min]		n_2 [r/min]	M_{22} [Nm]	M_2 [Nm]	c	i			
24	100	-	584	82	117	1.8	6.022	GKR06-2M□□□100C32	E84AV□□□7524□□0	42
23	96	-	562	85	121	1.0	6.257	GKR05-2M□□□100C32	E84AV□□□7524□□0	42
13	53	-	309	154	220	1.5	11.376	GKR06-2M□□□100C32	E84AV□□□7524□□0	42
12	48	-	283	169	241	1.4	12.444	GKR06-2M□□□100C32	E84AV□□□7524□□0	42
11	44	-	256	186	266	1.2	13.720	GKR06-2M□□□100C32	E84AV□□□7524□□0	42
9.2	38	-	221	215	307	1.1	15.873	GKR06-2M□□□100C32	E84AV□□□7524□□0	42
8.4	34	-	201	237	339	1.0	17.500	GKR06-2M□□□100C32	E84AV□□□7524□□0	42
7.5	31	-	181	264	376	0.9	19.444	GKR06-2M□□□100C32	E84AV□□□7524□□0	42

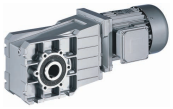

Selection tables

► 120 Hz: P_N = 11.00 kW

n_{22}/n_2 = 1 ... 24.0

n_1 = 147.1 ... 3530 r/min

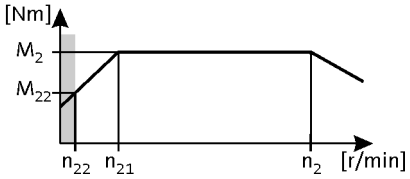

n_{22} [r/min]	n_{21} [r/min]		n_2 [r/min]	M_{22} [Nm]	M_2 [Nm]	c	i			
24	100	-	586	109	170	1.2	6.022	GKR06-2M□□□112C22	E84AV□□□1134□□0	42
13	53	-	310	206	322	1.0	11.376	GKR06-2M□□□112C22	E84AV□□□1134□□0	42
12	48	-	284	225	352	1.0	12.444	GKR06-2M□□□112C22	E84AV□□□1134□□0	42

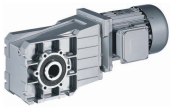

Dimensions

GKR□□-2M H□R

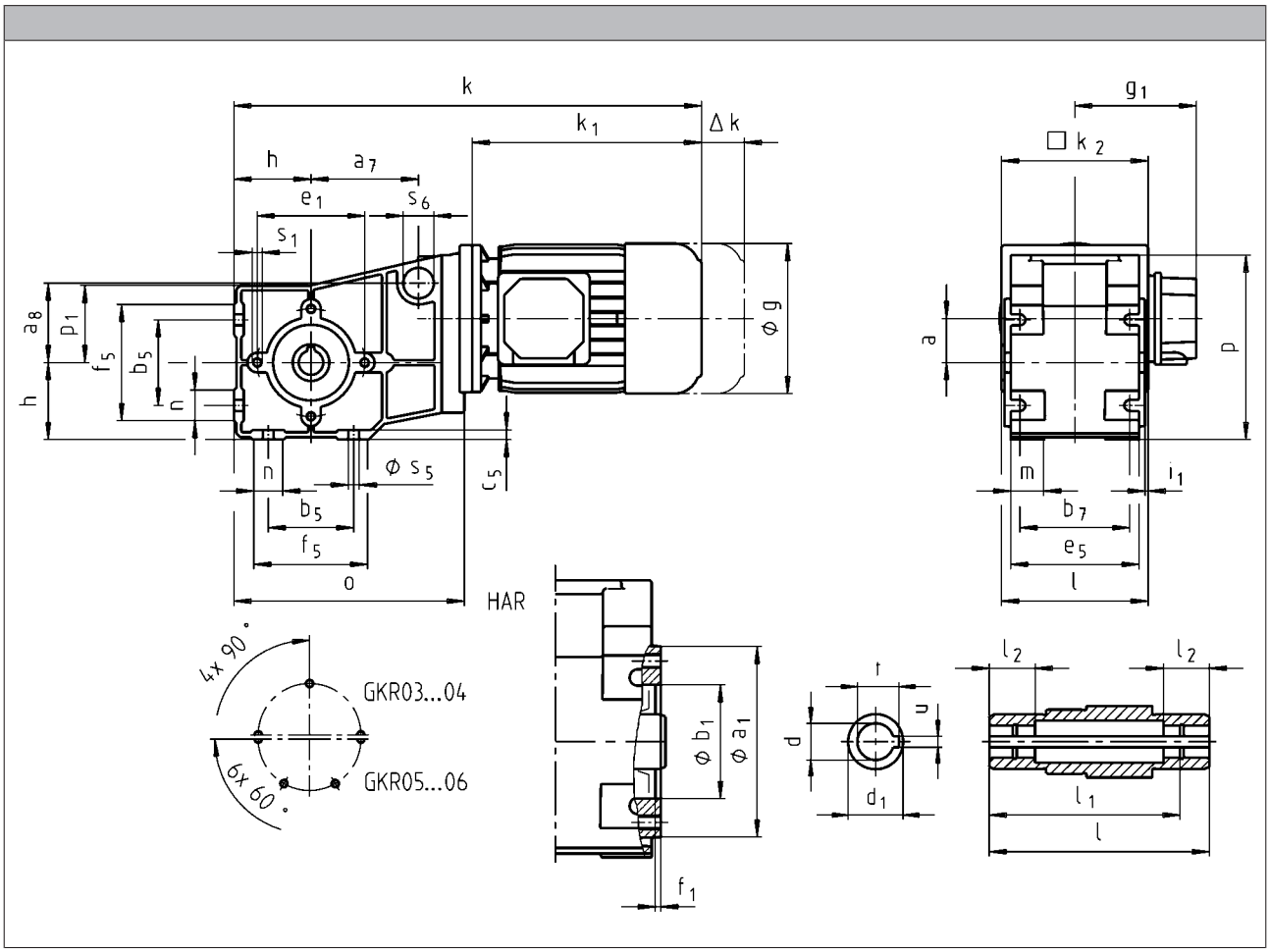

GKR bevel gearboxes

Technical data

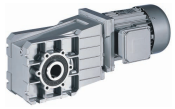

		063C32 063C42	071C32 071C42	080C32	080C42	090C32	100C12 100C32	112C22
g		123	139	156		176	194	218
g_1	MFEMAXX	100	109	150		157	166	176
	MFEMABR	107	118	132		137	147	158
k_1	MFEMAXX	187	207	224.5		274	324	319
k_2		120		145		180		222
Δ k	MFEMABR	40	52	73		68	76	90
	MFFMAXX	128					109	102
	MFFMABR	170	165	183		181	170	183
		k						
	GKR03	332						
	GKR04	383	403	425				
	GKR05	436	456	479		538	588	
	GKR06	488	508	530		590	640	641

	a	a_7	a_8	h	o	p[1]	p_1	s_6
GKR03	29	66	39	50	142	117	48	25
GKR04	36	88	65	63	189	151	63	25
GKR05	40			80	250.5	181	82	
GKR06	51			100	307	226	100	

	d[2]	d_1	l[1]	l_1	l_2	u	t[3]	i_1	a_1	b_1	e_1	f_1	s_1
	H7					JS9	+0,2			J7			
GKR03	18 20	30 30	100 100	85 85	22 22	6 6	20.8 22.8	2.5 2.5	85	55	70	2.5	M6x12
GKR04	20 25	30 35	120 120	105 105	25 25	6 8	22.8 27	2.5 2.5	104	62	88	3	M8x16
GKR05	30 35	50 50	143 143	127 127	25 25	8 10	33.3 38.3	4 4	116	80	100	4	M8x15
GKR06	40 45	65 65	170 170	150 150	30 30	12 14	43.3 48.8	5 5	140	100	120	4	M10x22

	b_5	b_7	c_5	e_5	f_5	m	n	s_5
GKR03	60	75	7	90	80	22	20	6.6
GKR04	70	90	8	105	95	28	25	9
GKR05	100	100	11	115	138	27	48	9
GKR06	120	125	12	145	164	32	53	11

[1] k_2 !
[2] l_2 !
[3] d = 25 mm > DIN 6885/3

Dimensions

GKR□□-2M HAK

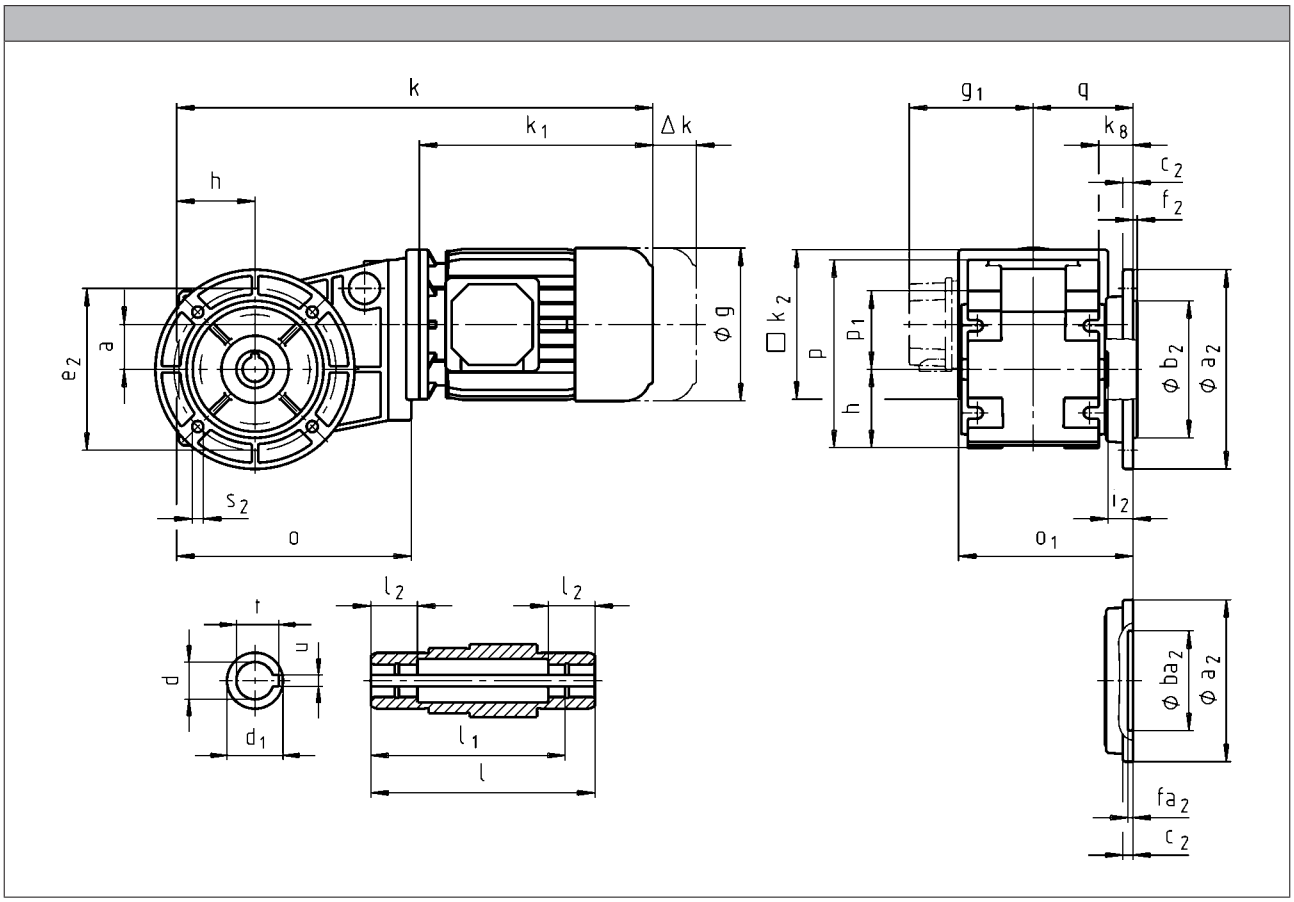

GKR bevel gearboxes

Technical data

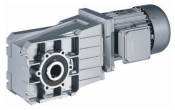

		063C32 063C42	071C32 071C42	080C32	080C42	090C32	100C12 100C32	112C22
g		123	139	156		176	194	218
g_1	MFEMAXX	100	109	150		157	166	176
	MFEMABR	107	118	132		137	147	158
k_1	MFEMAXX	187	207	224.5		274	324	319
k_2		120		145		180		222
Δ k	MFEMABR	40	52	73		68	76	90
	MFFMAXX			128			109	102
	MFFMABR	170	165	183		181	170	183
		k						
GKR03		332						
GKR04		383	403	425				
GKR05		436	456	479		538	588	
GKR06		488	508	530		590	640	641

	a	h	k_8	o	p[1]	p_1	q
GKR03	29	50	35	142	117	48	80
GKR04	36	63	28	189	151	63	80
GKR05	40	80	47.5	250.5	181	82	105
GKR06	51	100	54	307	226	100	126.5

	d[2]	d_1	l	l_1	l_2	u	t[3]	i_2	o_1[1]	a_2	b_2	ba_2	c_2	e_2	f_2	fa_2	s_2
	H7					JS9	+0,2				j7	H7					
GKR03	18 20	30 30	100 100	85 85	22 22	6 6	20.8 22.8	30 30	130 130	120 110	80 -	- 60	8 8	100 87	3 -	- 4	7 9
GKR04	20 25	30 35	120 120	105 105	25 25	6 8	22.8 27	20 20	140 140	120 160	80 110		8 8	100 130	3 3.5		7 9
GKR05	30 35	50 50	143 143	127 127	25 25	8 10	33.3 38.3	33.5 33.5	176.5 176.5	160 200	110 130		12 12	130 165	3.5 3.5		9 11
GKR06	40 45	65 65	170 170	150 150	30 30	12 14	43.3 48.8	41.5 41.5	211.5 211.5	200 250	130 180		12 12	165 215	3.5 4		11 14

[1] k_2 !
[2] l_2 !
[3] d = 25 mm > DIN 6885/3

Dimensions

GKR□□-2M V□R

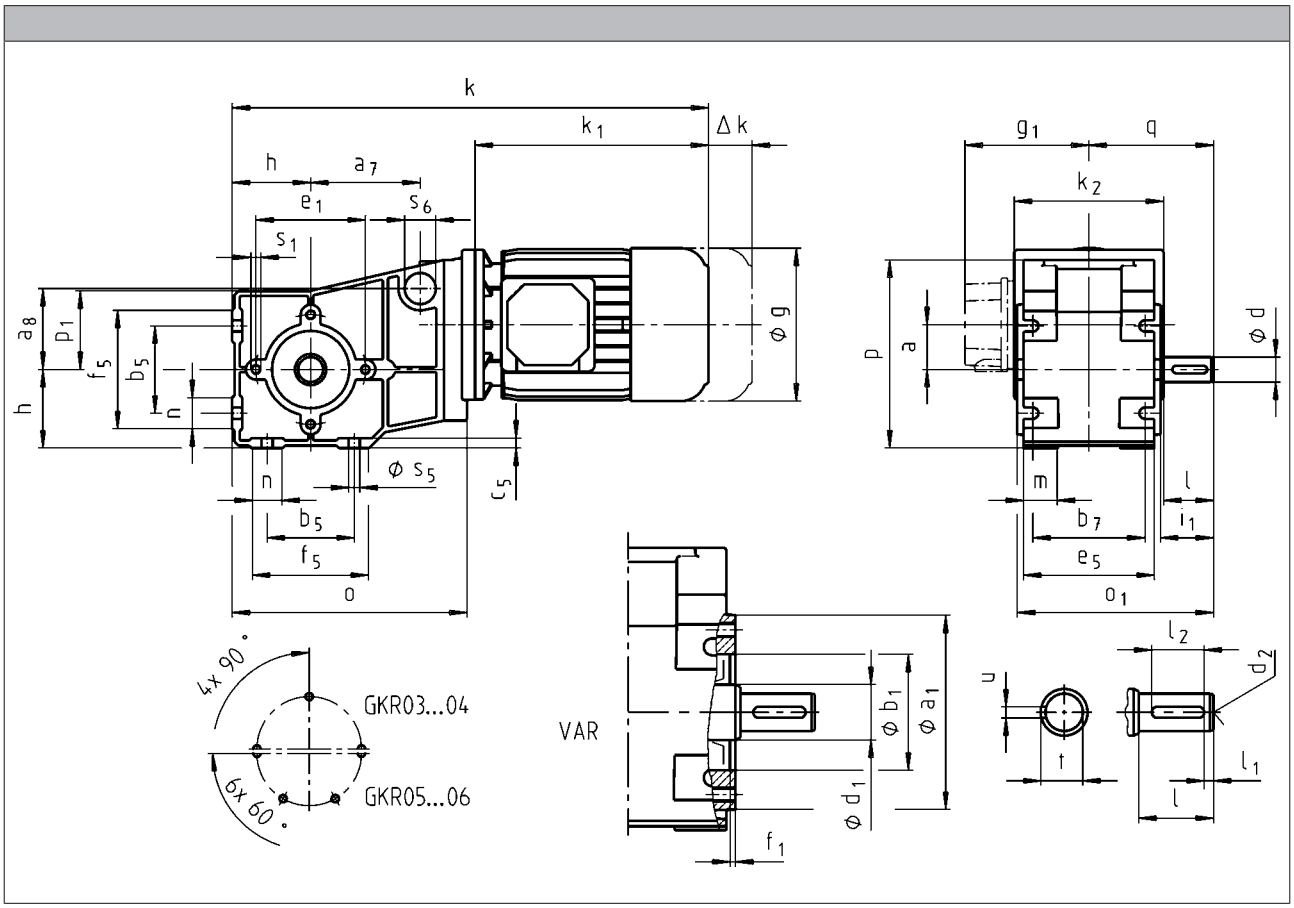

GKR bevel gearboxes

Technical data

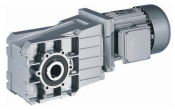

		063C32 063C42	071C32 071C42	080C32	080C42	090C32	100C12 100C32	112C22
g		123	139	156		176	194	218
g_1	MFEMAXX	100	109	150		157	166	176
	MFEMABR	107	118	132		137	147	158
k_1	MFEMAXX	187	207	224.5		274	324	319
k_2		120		145		180		222
Δ k	MFEMABR	40	52	73		68	76	90
	MFFMAXX	128					109	102
	MFFMABR	170	165	183		181	170	183
		k						
GKR03		332						
GKR04		383	403	425				
GKR05		436	456	479		538	588	
GKR06		488	508	530		590	640	641

	a	a_7	a_8	h	o	p[1)]	p_1	q	s_6
GKR03	29	66	39	50	142	117	48	90	25
GKR04	36	88	65	63	189	151	63	100	25
GKR05	40			80	250.5	181	82	131.5	
GKR06	51			100	307	226	100	155	

	d	d_1	d_2	l	l_1	l_2	u	t	i_1	o_1[1)]	a_1	b_1	e_1	f_1	s_1
	k6											J7			
GKR03	20	30	M6	40	5	28	6	22.5	42.5	137.5	85	55	70	2.5	M6x12
GKR04	20	30	M6	40	5	28	6	22.5	42.5	158	104	62	88	3	M8x16
GKR05	30	50	M10	60	6	45	8	33	64	199	116	80	100	4	M8x15
GKR06	35	65	M12	70	7	56	10	38	75	235	140	100	120	4	M10x22

	b_5	b_7	c_5	e_5	f_5	m	n	s_5
GKR03	60	75	7	90	80	22	20	6.6
GKR04	70	90	8	105	95	28	25	9
GKR05	100	100	11	115	138	27	48	9
GKR06	120	125	12	145	164	32	53	11

[1)] k_2 !

Dimensions

GKR□□-2M VAK

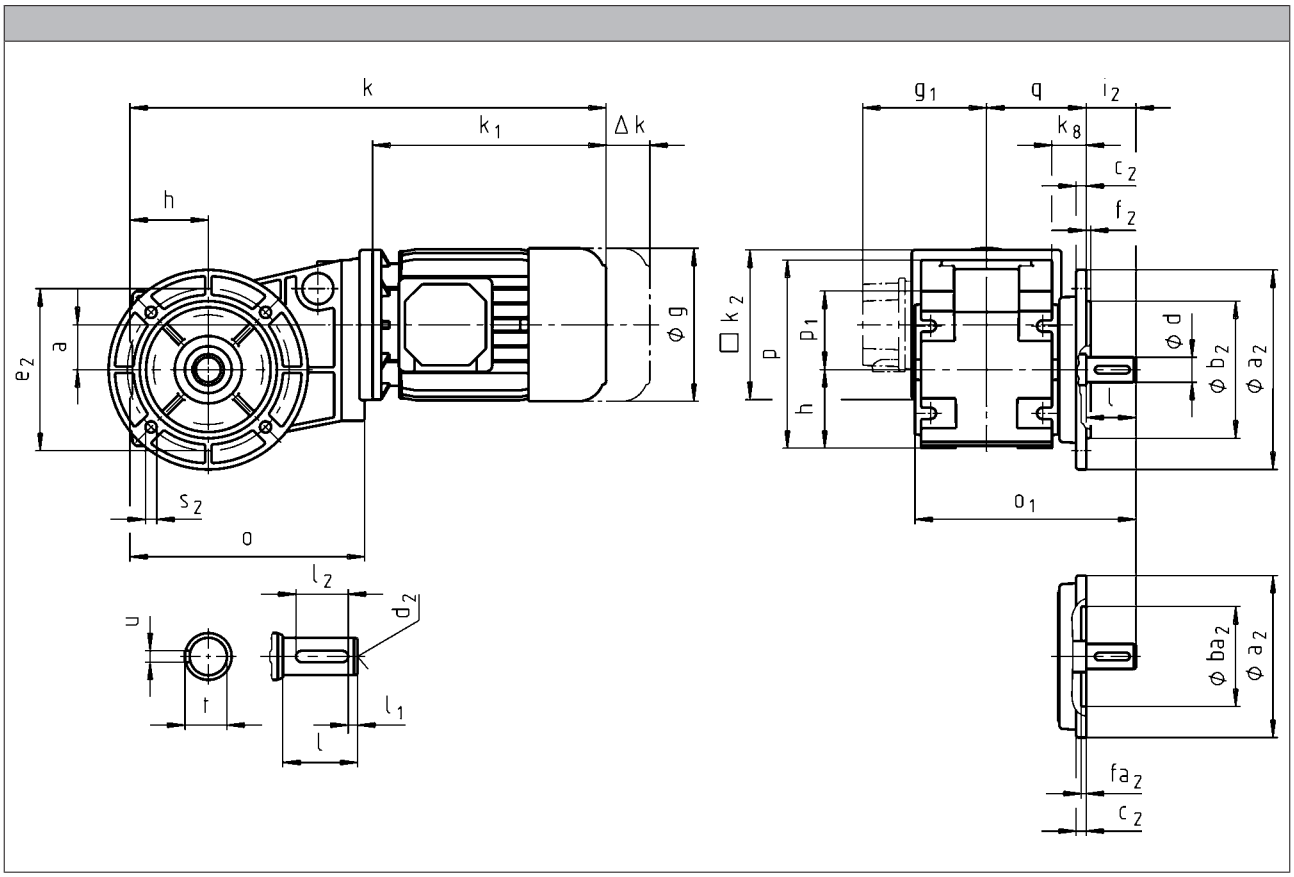

GKR bevel gearboxes

Technical data

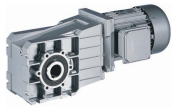

		063C32 063C42	071C32 071C42	080C32	080C42	090C32	100C12 100C32	112C22
g		123	139	156		176	194	218
g_1	MFEMAXX	100	109	150		157	166	176
	MFEMABR	107	118	132		137	147	158
k_1	MFEMAXX	187	207	224.5		274	324	319
k_2		120		145		180		222
Δ k	MFEMABR	40	52	73		68	76	90
	MFFMAXX			128			109	102
	MFFMABR	170	165	183		181	170	183
		k						
GKR03		332						
GKR04		383	403	425				
GKR05		436	456	479		538	588	
GKR06		488	508	530		590	640	641

	a	h	k_8	o	p[1)]	p_1	q
GKR03	29	50	35	142	117	48	80
GKR04	36	63	28	189	151	63	80.5
GKR05	40	80	47.5	250.5	181	82	105
GKR06	51	100	54	307	226	100	126.5

	d	d_2	l	l_1	l_2	u	t	i_2	o_1[1)]	a_2	b_2	ba_2	c_2	e_2	f_2	fa_2	s_2
	k6										j7	H7					
GKR03	20	M6	40	5	28	6	22.5	40	167.5	120 110	80 -	- 60	8 8	100 87	3 -	- 4	7 9
GKR04	20	M6	40	5	28	6	22.5	40	178	120 160	80 110		8 8	100 130	3 3.5		7 9
GKR05	30	M10	60	6	45	8	33	60	232.5	160 200	110 130		12 12	130 165	3.5 3.5		9 11
GKR06	35	M12	70	7	56	10	38	70	276.5	200 250	130 180		12 12	165 215	3.5 4		11 14

[1)] k_2 !

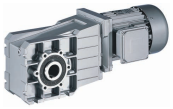

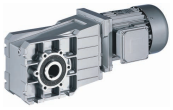

Hollow shaft with shrink disc

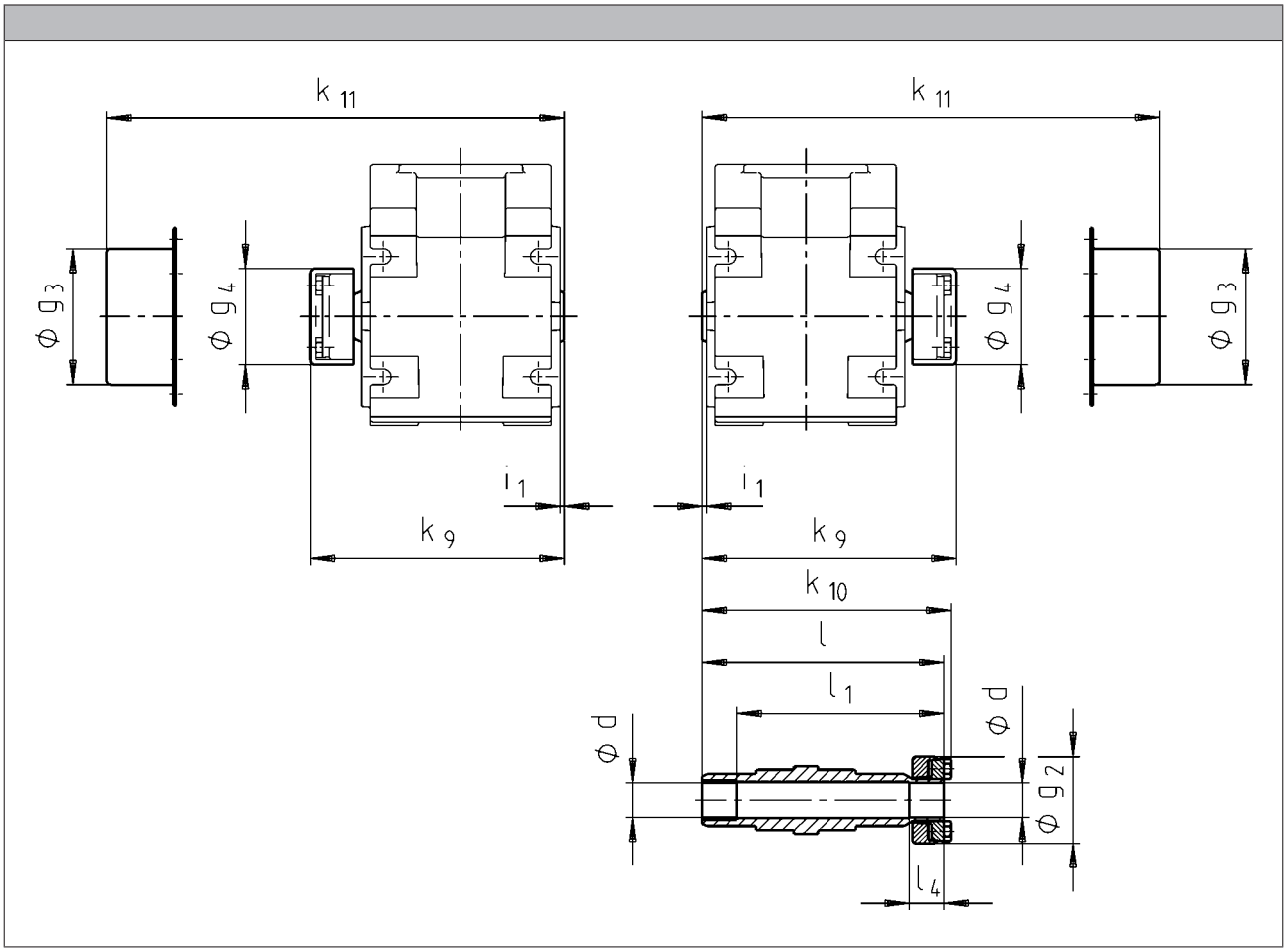

	d [1]	g_2	g_3	g_4	i_1	k_9	k_{10}	k_{11}	l	l_1	l_4
	h6										
GKR03	20	50	65	54	2.5	126	124	138	120	100	20
GKR04						146	144	158	144	120	
GKR05	30 35	80	90	84	4.0	176	177	182	171	151	28
GKR06	40	90	100	94	5.0	202	210	214	204	174	30

[1] Machine shaft design.

- ► Output flange and hollow shaft with shrink disc (output version SAK) are not possible in the same location. For additional dimensions see output version H□□.
- ► Ensure that the strength of the machine shaft material is adequate in shrink disc designs.
  When using typical steels, e.g. C45, 42CrMo4, the torques listed in the selection tables can be used without restriction.
  Please consult us if you wish to use material that is considerably weaker. Medium surface roughness Rz must not exceed 15 µm (turning is sufficient).

Mounting set for hollow shaft circlip:
Proposed design for auxiliary tools

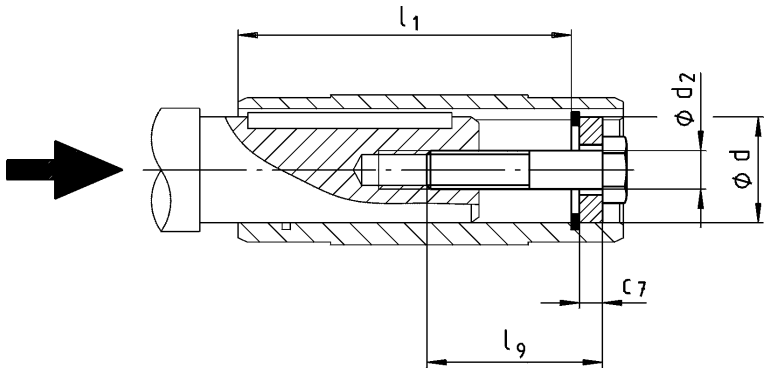

	d	l_1	d_2	l_9	c_7
	H7				
GKR03	18 20	85	M6	40	4
GKR04	20 25	105			
			M10		5
GKR05	30 35	127			6
			M12	50	7
GKR06	40 45	150	M16	60	8
					9

Hoseproof hollow shaft cover

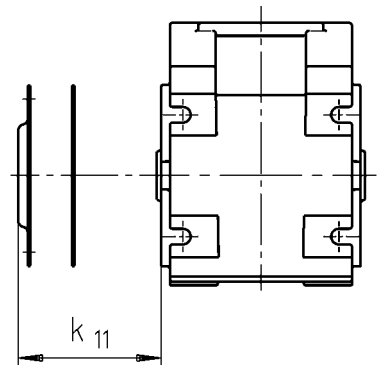

► Cover including gasket

	k_{11}
	[mm]
GKR03	9
GKR04	
GKR05	10
GKR06	11

Gearboxes with 2nd output shaft end

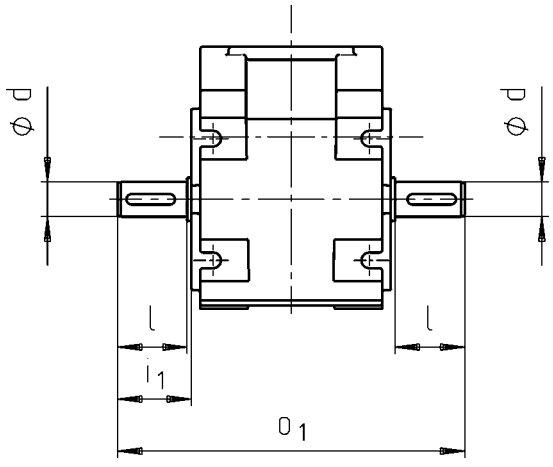

	d	l	i_1	o_1
	k6			
	[mm]	[mm]	[mm]	[mm]
GKR03	20	40	42.5	180
GKR04				200
GKR05	30	60	64.0	263
GKR06	35	70	75.0	310

Rubber buffer for torque plate

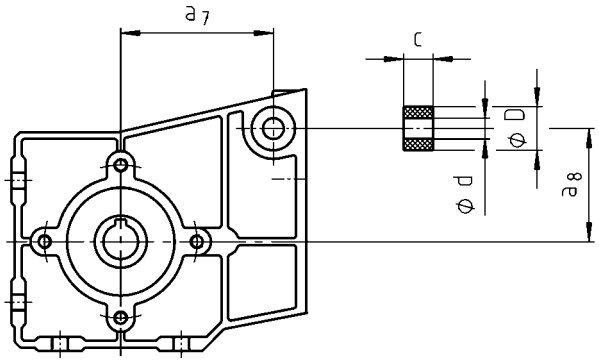

	d	D	c	a_7	a_8
GKR03	10	25	13.0	66.0	39
GKR04				88.0	65

Torque plate on threaded pitch circle

In position 3

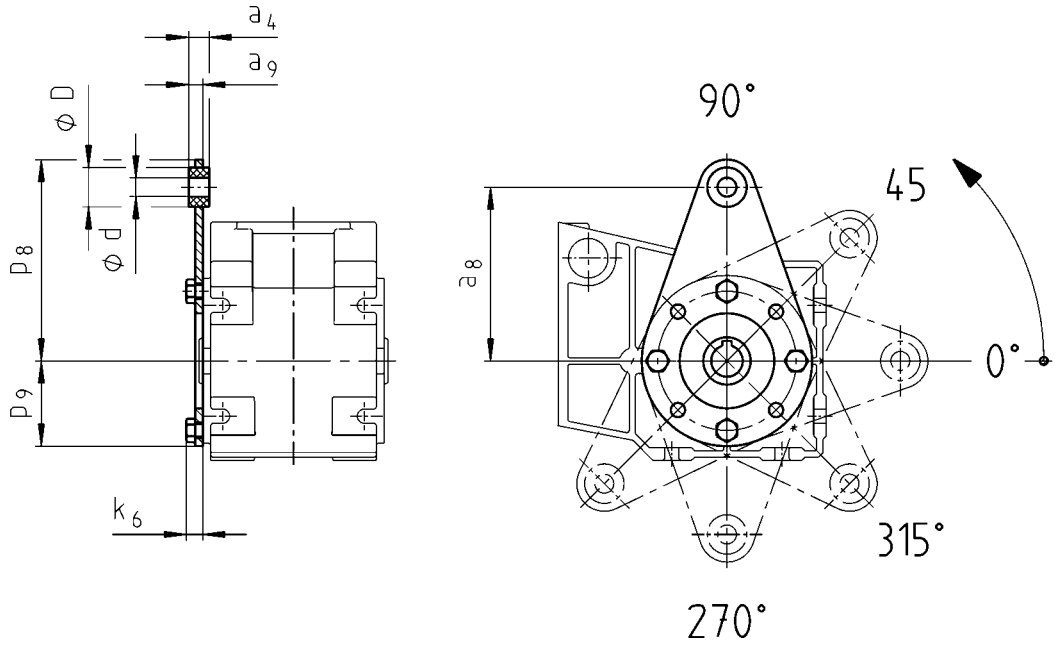

In position 5

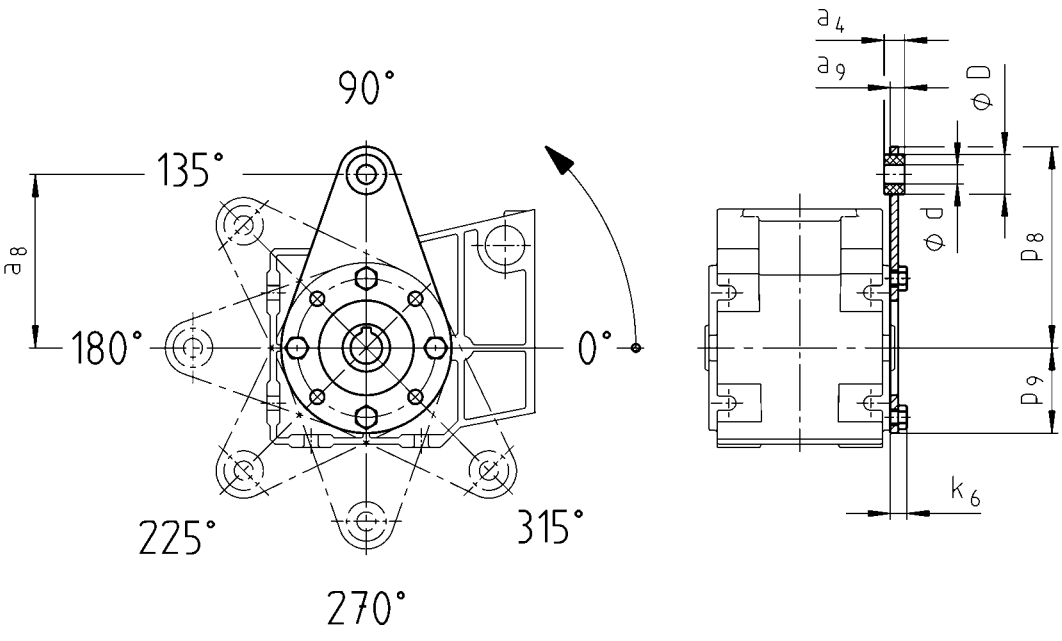

	a_4	a_8	a_9	d	D	k_6	p_8	p_9
GKR03	12	100	8.0	8	20	9	115	42
GKR04	13	110	9.0	10	25	11	128	54

Torque plate on threaded pitch circle

In position 3

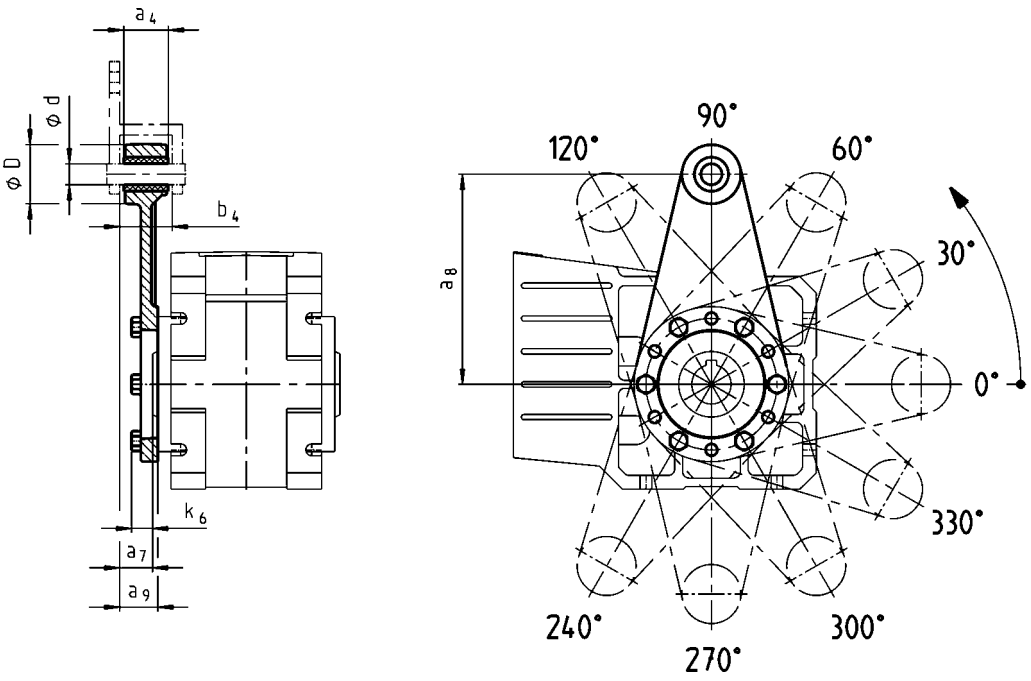

In position 5

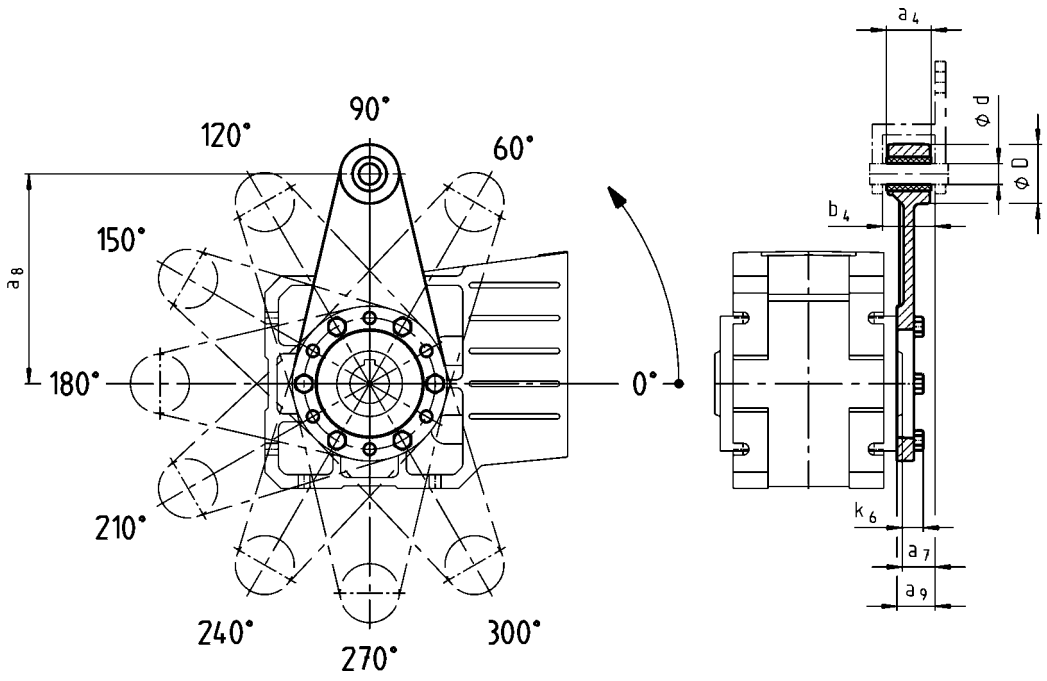

	a_4	a_7	a_8	a_9	b_4	d	D	k_6
GKR05	34	23.5	160	27.5	38.5	16	45	15
GKR06	40	28.0	200	33.0	44.5	20	50	18

Torque plate at housing foot

In position 4 or 6

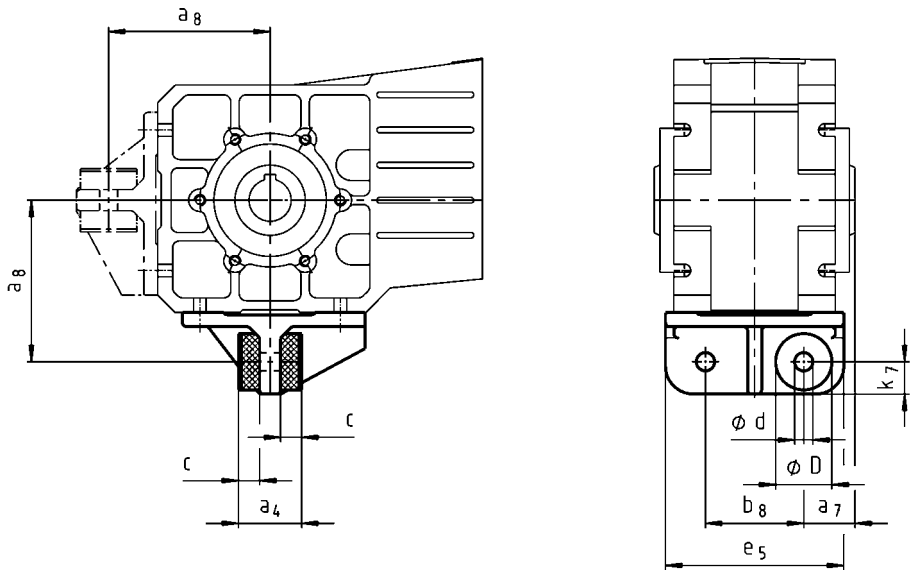

	a_4	a_7	a_8	b_8	c	d	D	e_5	k_7
GKR05	45	36.5	115	70	15.0	13	40	127	25
GKR06	72	45.0	145	80	27.0	17	50	145	30

Ventilation position

GKR06

A	B	C
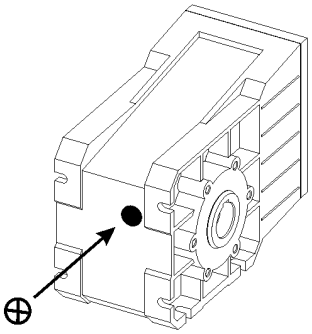	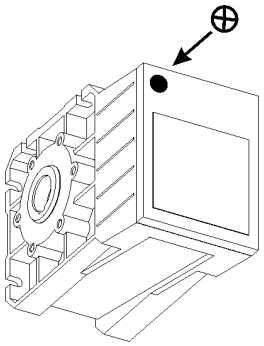	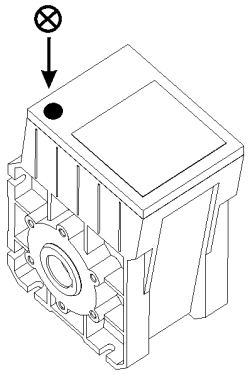
D	**E**	**F**
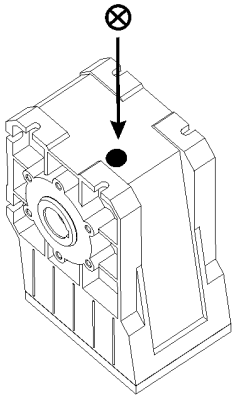	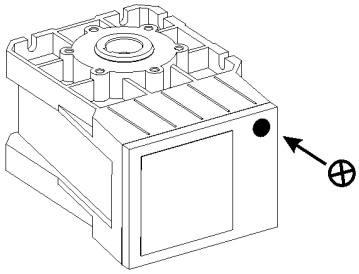	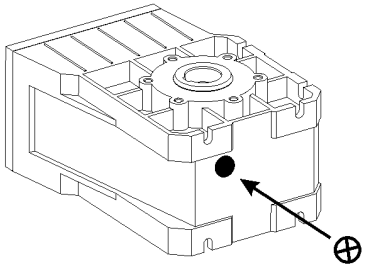

⊗ Ventilation

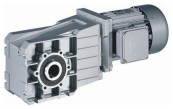

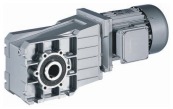

GKS helical-bevel gearboxes

0.55 to 22 kW

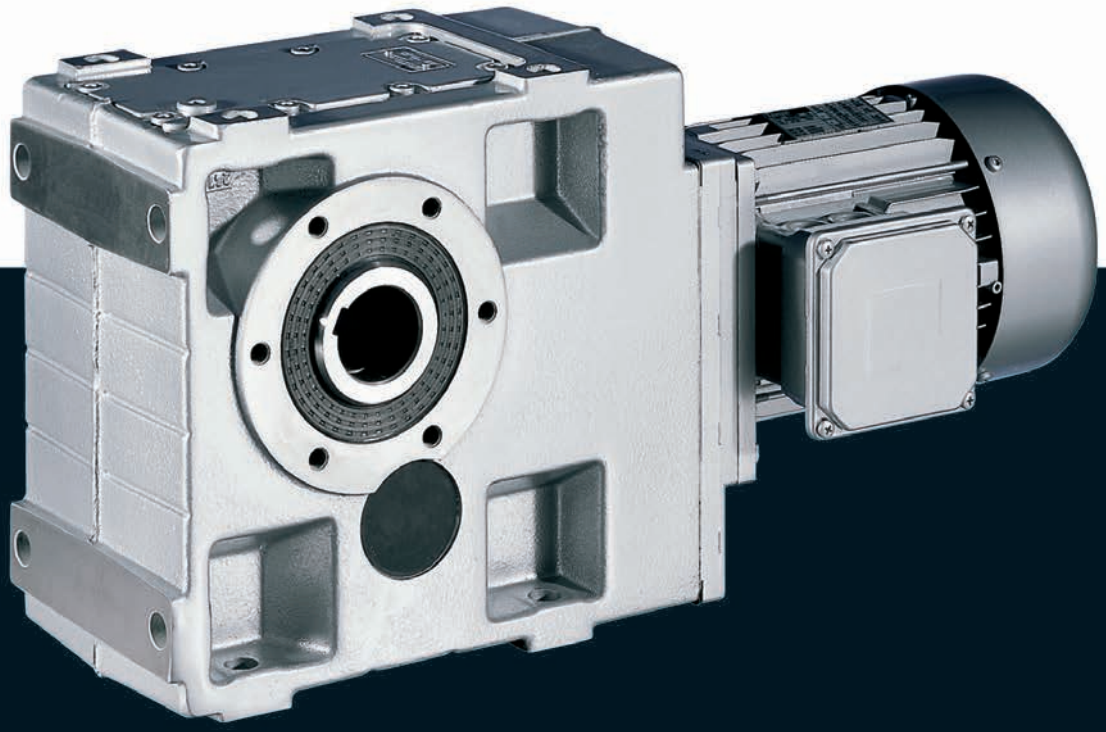

GKS helical-bevel gearboxes



Contents

General information	List of abbreviations	6.9 - 4
	Product key	6.9 - 5
	Product information	6.9 - 7
	Functions and features	6.9 - 8
	Dimensioning	6.9 - 13
	Notes on ordering	6.9 - 18
	Ordering details checklist	6.9 - 19
Technical data	Permissible radial and axial forces at output	6.9 - 23
	Output backlash in angular minutes	6.9 - 27
	Moments of inertia	6.9 - 28
	Weights	6.9 - 35
	Selection tables	6.9 - 41
	Dimensions	6.9 - 66
Accessories	Hollow shaft with shrink disc	6.9 - 83
	Mounting set for hollow shaft circlip: Proposed design for auxiliary tools	6.9 - 84
	Hoseproof hollow shaft cover	6.9 - 85
	Gearboxes with 2nd output shaft end	6.9 - 86
	Torque plate on threaded pitch circle	6.9 - 87
	Torque plate at housing foot	6.9 - 88
	Ventilations	6.9 - 89



List of abbreviations

$\eta_{c=1}$		Efficiency
c		Load capacity
f_N	[Hz]	Rated frequency
$F_{ax,max}$	[N]	Max. axial force
$F_{rad,max}$	[N]	Max. radial force
H_{max}	[m]	Site altitude
i		Ratio
J	[kgcm²]	Moment of inertia
m	[kg]	Mass
M_2	[Nm]	Output torque
n_2	[r/min]	Output speed
n_N	[r/min]	Rated speed
P_N	[kW]	Rated power
$S_{hü}$	[1/h]	Transition operating frequency
$T_{opr,max}$	[°C]	Max. ambient operating temperature
$T_{opr,min}$	[°C]	Min. ambient operating temperature
$U_{N,\Delta}$	[V]	Rated voltage
$U_{N,Y}$	[V]	Rated voltage

CE	Communauté Européenne
CSA	Canadian Standards Association
DIN	Deutsches Institut für Normung e.V.
EMC	Electromagnetic compatibility
EN	European standard
IEC	International Electrotechnical Commission
IM	International Mounting Code
IP	International Protection Code
NEMA	National Electrical Manufacturers Association
UL	Underwriters Laboratory Listed Product
UR	Underwriters Laboratory Recognized Product
VDE	Verband deutscher Elektrotechniker (Association of German Electrical Engineers)
CCC	China Compulsory Certificate
GOST	Certificate for Russian Federation
cURus	Combined certification marks of UL for the USA and Canada
UkrSEPRO	Certificate for Ukraine



Product key

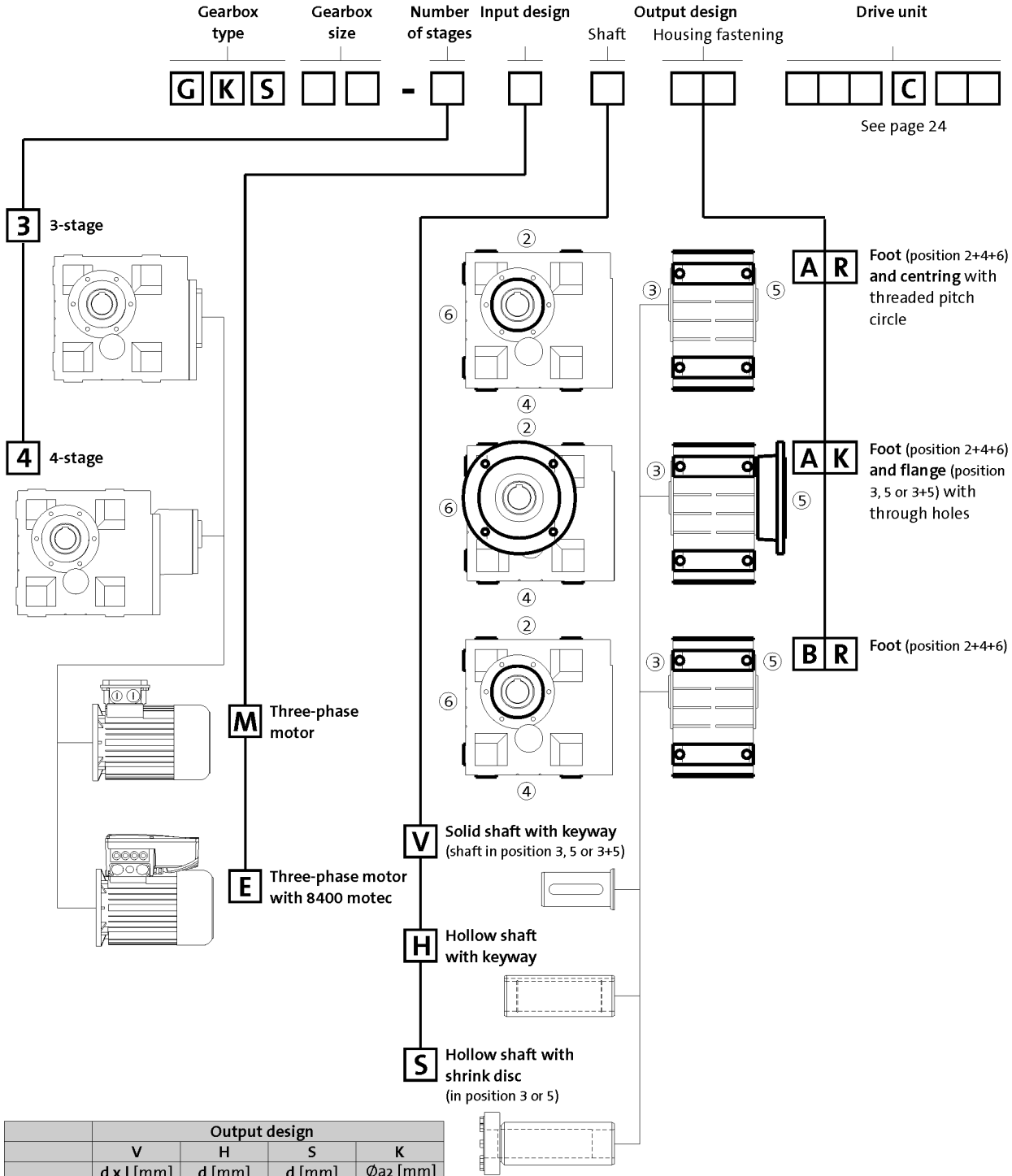

	Output design			
	V	H	S	K
	d x l [mm]	d [mm]	d [mm]	Øa2 [mm]
GKS04-3	25x50	25/30	25/30	160
GKS05-3/4	30x60	30/35	35	200
GKS06-3/4	40x80	40/45	40	200[1]/250
GKS07-3/4	50x100	50/55	50	250/300
GKS09-3/4	60x120	60/70	65	350
GKS11-3/4	80x160	70/80	80	400/450
GKS14-3/4	100x200	100	100	450

[1] Only in the case of H and S type of output



Product key

Mounting position (A to F) and position of system blocks (1 to 6)

A	B	C
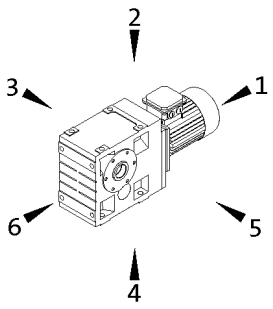	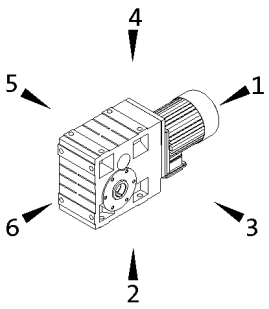	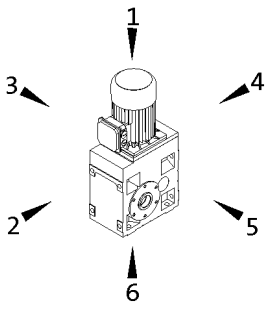
D	**E**	**F**
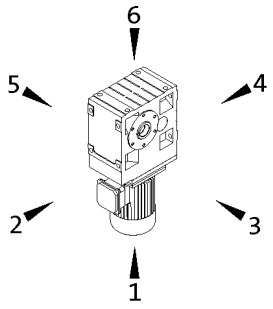	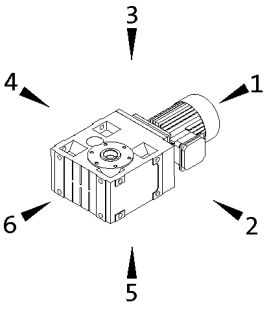	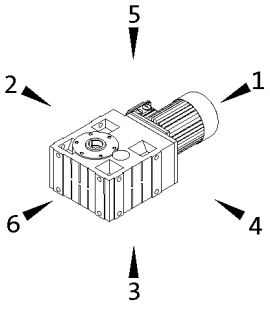

Hollow shaft: 0
Solid shaft: 3, 5, 8 (3+5)
Hollow shaft with shrink disc: 3, 5

Without flange: 0
Flange: 3, 5, 8 (3+5)
Terminal box / motec: 2, 3, 4, 5

Gearbox designs

Basic versions	
Motor efficiency	Standard efficiency Increased efficiency (IE2)
Surface and corrosion protection	OKS-G (primer: grey) OKS-S (paint: RAL 7012)
Lubricant	CLP 460 (mineral)
Ventilation	Oil control plugs for GKS05 to 14 Breather elements for GKS06 ... 14

Options	
Surface and corrosion protection	OKS-S (special paint according to RAL) OKS-M (special paint according to RAL) OKS-L (special paint according to RAL)
Lubricant	CLP HC 320 (synthetic) CLP HC 220 USDA H1 (synthetic)
Shaft sealing rings	Driven shaft: Viton
Ventilation	Breather elements for GKS05 Compensation reservoir for GKS09 to 14-3 in mounting position C
Accessories	Torque plate on threaded pitch circle Housing foot torque plate 2nd output shaft end Shrink disc cover Hoseproof hollow shaft cover Mounting set for hollow shaft circlip
Nameplate	Metal nameplate (supplied loose) Adhesive nameplate (supplied loose)



Product information

Lenze provides a geared motor construction kit, which covers a wide range of requirements. Numerous drive-side and output-side options enable precise adaptation of the drive to the specific application. This is the basis for versatile applications and functional scalability of our gearboxes and geared motors.
The modular concept and high power density make extremely compact sizes possible. Optimised teeth profiles and ground gears ensure low-noise operation and low backlash. The gearboxes are of compact and hence space-saving construction.

For maximum precision

Helical-bevel gearboxes have the major benefit of enabling extremely precise and reproducible positioning movements owing to their high torsional stiffness and low backlash. Our helical-bevel gearboxes can be combined with three-phase AC motors and servo motors to form a compact unit. They are available in 3- and 4-stage versions with a torque of up to 11,639 Nm and a ratio of up to i=1,936.

Inverters for motor-proximity installation

The Drive Package with decentralised Inverter Drives 8400 motec covers a power range up to 7.5 kW.

Designs

- 3-stage and 4-stage gearboxes
- Hollow shaft with keyway or shrink disc
- Solid shaft with keyway
- Foot or flange mounting
- Torque plate, including rubber buffer
- With MF three-phase AC motors (inverter-optimised) power range 0.55 ... 22 kW

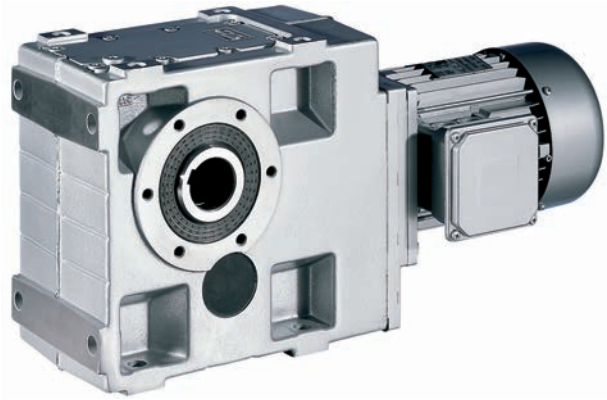

Helical-bevel geared motor GKS07-3M HBR 100-32



Functions and features

Gearbox type	GKS
Housing	
Design	Cuboid
Material	Aluminium / cast iron
Solid shaft	
Design	with keyway to DIN 6885
Tolerance	k6 (d ≤ 50 mm) m6 (d > 50 mm)
Material	Tempered steel C45 or 42CrMo4
Hollow shaft	
Design	H: with keyway S: smooth
Tolerance	Bore H7
Material	Tempered steel C45
Toothed part	
Design	Ground tooth flanks Optimised tooth flank geometry
Material	Case-hardened steel
Shaft-hub joint	1st stage/prestage/helical (bevel) gearbox: Friction-type connection Output stage (= 2nd, 3rd or 4th stage): Friction-type or positive-fit connection
Shaft sealing rings	
Design	With dust lip
Material	NB / FP
Bearing	
Design	Ball bearing / tapered-roller bearing depending on size and design
Schmierstoffe	
Standard	DIN 51502
Quantities	corresponding to mounting position (see operating instructions)
Mechanical efficiency	
1-stage gearboxes [$\eta_{c=1}$]	
2-stage gearboxes [$\eta_{c=1}$]	
3-stage gearboxes [$\eta_{c=1}$]	0.95
4-stage gearboxes [$\eta_{c=1}$]	0.93
Notes	



Functions and features

Lubricants

Lenze gearboxes and geared motors are ready for operation on delivery and are filled with lubricants specific to both the drive and the design. The mounting position and design specified in the order are key factors in choosing the volume of lubricant.

The lubricants listed in the lubricant table are approved for use in Lenze drives.

Lubricant table

Mode	CLP 460	CLP HC 320	CLP HC 220 USDA H1
Ambient temperature [°C]	0 ... +40	-25 ... +50	-20 ... +40
Specification	Mineral based oil with additives	Synthetic-based oil (synthetic hydrocarbon / poly-alpha-olefin oil)	
Note			For food processing industry
Changing interval	16000 operating hours not later than after three years (oil temperature 70 to 80 °C)	25000 operating hours not later than after three years (oil temperature 70 to 80 °C)	16000 operating hours not later than after three years (oil temperature 70 to 80 °C)
Fuchs	Fuchs Renolin CLP 460	Fuchs Renolin Unisyn CLP 320	bremer & leguil Cassida Fluid GL 220
Klüber	Klüberoil GEM1-460 N	Klübersynth GEM4-320 N	Klüberoil 4 UH1-220 N
Shell	Shell Omala S2 G 460	Shell Omala S4 GX HD 320	

► Please contact your Lenze sales office if you are operating at ambient temperatures in areas up to< -20 °C bzw. > or up to +40°C.



Functions and features

Surface and corrosion protection

For optimum protection of geared motors against ambient conditions, the surface and corrosion protection system (OKS) offers tailor-made solutions.

Various surface coatings combined with other protective measures ensure that the geared motors operate reliably even at high air humidity, in outdoor installations or in the presence of atmospheric impurities. Any colour from the RAL Classic collection can be chosen for the top coat. The geared motors are also available unpainted (no surface and corrosion protection).

Surface and corrosion protection system	Applications	Measures
	Catalogue text	Catalogue text
OKS-G (primed)	• Dependent on subsequent top coat applied	• 2K PUR priming coat (grey) • Zinc-coated screws • Rust-free breather elements Optional measures • Stainless steel nameplate
OKS-S (small)	• Standard applications • Internal installation in heated buildings • Air humidity up to 90%	• Surface coating as per corrosivity category C1 (in line with EN 12944-2) • Zinc-coated screws • Rust-free breather elements Optional measures • Stainless steel nameplate
OKS-M (medium)	• Internal installation in non-heated buildings • Covered, protected external installation • Air humidity up to 95%	• Surface coating as per corrosivity category C2 (in line with EN 12944-2) • Zinc-coated screws • Rust-free breather elements Optional measures • Stainless steel shaft • Stainless steel nameplate • Rust-free shrink disc (on request)
OKS-L (high)	• External installation • Air humidity above 95% • Chemical industry plants • Food industry	• Surface coating as per corrosivity category C3 (in line with EN 12944-2) • Blower cover and B end shield additionally primed • Cable glands with gaskets • Corrosion-resistant brake with cover ring, stainless friction plate, and chrome-plated armature plate (on request) • All screws/screw plugs zinc-coated • Stainless breather elements • Threaded holes that are not used are closed by means of plastic plugs Optional measures • Sealed recesses on motor (on request) • Stainless steel shaft • Stainless steel nameplate • Rust-free shrink disc (on request) • Additional priming coat on cast iron fan • Oil expansion tank and torque plates painted separately and supplied loose



Functions and features

Structure of surface coating

Surface and corrosion protection system	Corrosivity category	Surface coating	Colour
	DIN EN ISO 12944-2	Structure	
Without OKS (uncoated)		Dipping primed gearbox	
OKS-G (primed)		Dipping primed gearbox 2K PUR priming coat	
OKS-S (small)	C1	Dipping primed gearbox 2K-PUR top coat	Standard: RAL 7012 Optional: RAL Classic
OKS-M (medium)	C2	Dipping primed gearbox 2K PUR priming coat 2K-PUR top coat	Standard: RAL 7012 Optional: RAL Classic
OKS-L (high)	C3	Dipping primed gearbox 2K PUR priming coat 2K-PUR top coat	Standard: RAL 7012 Optional: RAL Classic



Functions and features

Ventilation

Non-ventilated gearboxes
No ventilation is required for gearbox GKS04.

Gearboxes that may optionally be equipped with ventilation
Special measures are not usually required when using the GST05 gearbox. In borderline cases, e.g. at input speeds > 2000 rpm, we recommend the use of breather elements, which we can supply if required.

Ventilated gearboxes
Gearboxes GKS06 to 14 are supplied with breather elements as standard.

Special measures for mounting position C (motor on top)
We recommend that an oil compensation reservoir is always used with gearbox sizes G□□09 to 14 in this mounting position. This reservoir can be purchased as an option. For illustrations and measures, please refer to the Accessories chapter.

This is not required at higher ratios or low input speeds. Please contact Lenze for confirmation in this case.



Dimensioning

General information about the data provided in this catalogue

Powers, torques and speeds
The powers, torques and speeds specified in this catalogue are rounded values and are valid under the following conditions:
- Operating time/day = 8 h (100% OT)
- Duty class I for up to 10 switching operations/h
- Mounting positions and designs in this catalogue
- Standard lubricant
- T_{amb} = 20 °C for gearboxes,
  T_{amb} = 40 °C for motors (in accordance with EN 60034)
- Site altitude < = 1000 m amsl
- The selection tables provide the permissible mechanical powers and torques. For notes on the thermal power limit, see chapter drive dimensioning.
- The rated power specified for motors and geared motors applies to operating mode S1 (in accordance with EN 60034).

Under different operating conditions, the values obtained may vary from those listed here.
In the case of extreme operating conditions, please consult your Lenze sales office.



Dimensioning

Thermal power limit

The thermal power limit, defined by the heat balance, limits the permissible gearbox continuous power. It may be less than the mechanical power ratings listed in the selection tables.

The thermal power limit is affected by:
- the churning losses in the lubricant. These are determined by the mounting position and the circumferential speed of the wheels
- the load and the speed
- the ambient conditions: temperature, air circulation, input or dissipation via shafts and the foundation

Please consult your Lenze sales office
- if the following input speeds n_1 are exceeded on a continuous basis (continuous is defined as more than 8 h/day):

Motor frame size	Mounting position A, B, E, F	Mounting position C, D
063 ... 100	3000 r/min	3000 r/min
112 ... 132	3000 r/min	1500 r/min
160 ... 225	2000 r/min	1500 r/min

- if the following input speeds n_1 are exceeded:

Motor frame size	Mounting position A, B, E, F	Mounting position C, D
063 ... 100	4000 r/min	3000 r/min
112 ... 132	4000 r/min	2000 r/min
160 ... 225	3000 r/min	1500 r/min

- or if you are using the following gearbox type, size and ratio combinations at an input speed of n_1 > 1500 r/min:

Gearbox type	Gearbox size	Ratio i
GKS helical-bevel gearbox	07, 09, 11, 14	≤ 25

Possible ways of extending the application area

- synthetic lubricant (option)
- shaft sealing rings made from FP material/Viton (option)
- reduction in lubricant quantity
- cooling of the geared motor by means of air convection on the machine/system



Dimensioning

Load capacity and application factor

Load capacity c of gearbox
Rated value for the load capacity of Lenze geared motors.
- c is the ratio of the permissible rated torque of the gearbox to the rated torque supplied by the drive component (e.g. the built-in Lenze motor).
- The value of c must always be greater than the value of the application factor k calculated for the application.

Application factor k (according to DIN 3990)
Takes into account the influence of temporally variable loads which are actually present during the anticipated operating time of gearboxes and geared motors.
k is determined by:
- the type of load
- the load intensity
- temporal influences

Duty class	Load type
I	Smooth operation, small or light jolts
II	Uneven operation, average jolts
III	Uneven operation, severe jolts and/or alternating load

Application factor k

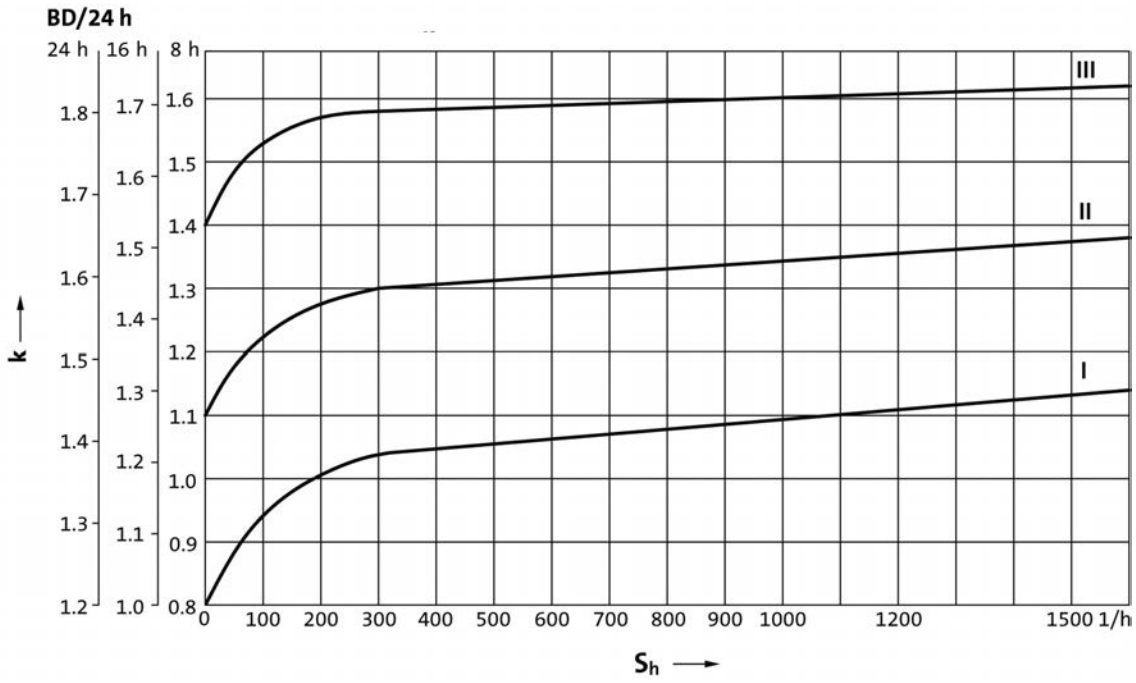

6.9



Dimensioning

Torque derating at low motor frequencies

Motor size-dependent torque reduction, taking into account the thermal response during operation on the inverter.

Torque characteristics

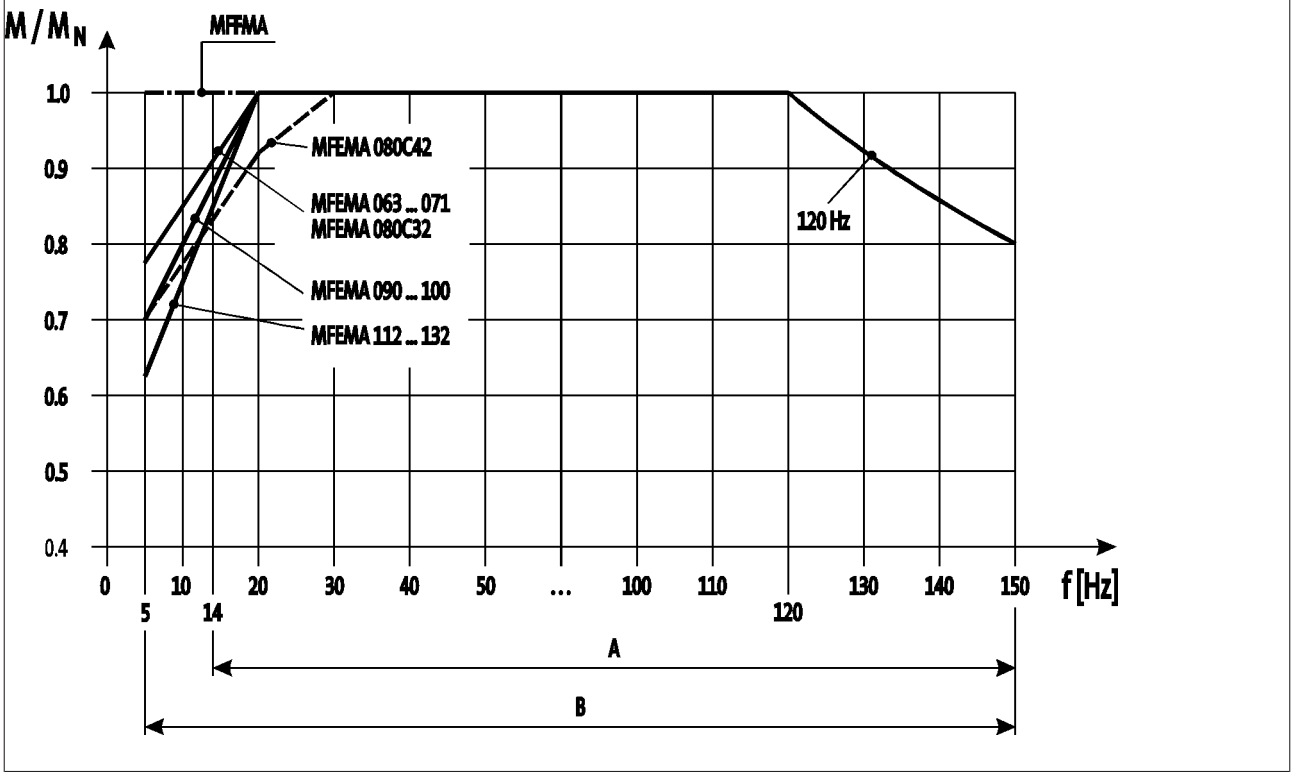

A = Operation with integral fan and brake
B = Operation with integral fan and brake control "Holding current reduction"

► The motor specifications stated in this catalogue for inverter operation apply to operation with a Lenze inverter. If you are uncertain, get in touch with the manufacturer of the inverter to ask whether the device is capable of driving the motor with the stated specifications (e.g. setting range, base frequency).

You can use the Drive Solution Designer for precise drive dimensioning.

The Drive Solution Designer helps you to carry out a fast and high-quality drive dimensioning.
The software includes well-founded and proven knowledge on drive applications and electro-mechanical drive components.

Please contact your Lenze sales office.



Dimensioning

Notes on the selection tables

The selection tables show the available combinations of gearbox type, number of stages, ratio and motor. They are used only to provide basic orientation.
The following legend indicates the structure of the selection tables.

Gearbox type

GST helical gearbox



Technical data

Selection tables

Rated power P_N of the drive motor in relation to the rated frequency

► 120 Hz: P_N = 0.55 kW

Speed setting range

n_{22}/n_2 = 1 ... 24.0

Speed range of the drive motor

n_1 = 143.3 ... 3440 r/min

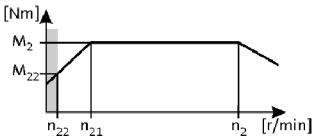

n_{22} [r/min]	n_{21} [r/min]		n_2 [r/min]	M_{22} [Nm]	M_2 [Nm]	c	i			
70	293	-	1680	2.3	3.0	4.5	2.048	GST04-1M□□□063C32	E84AV□□□5514□□0	79
64	268	-	1536	2.6	3.0	3.9	2.240	GST05-1M□□□063C32	E84AV□□□5514□□0	79

Product key of geared motor

Product key of inverter

Speed and torque information

Ratio i

Page number for dimensions

Speed and torque information

The speed and torque information applies to self-ventilated and forced-ventilated drives. Externally cooled drives can always output the torque M_2 in all the setting ranges. In the case of self-ventilated drives, a reduction to M_{22} is necessary in the lower speed range.

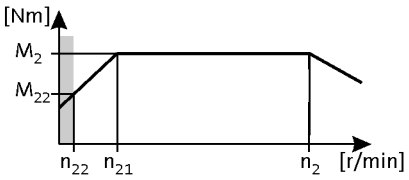

The following applies to self-ventilated geared motors: n_{22} is the minimum speed at which the torque M_{22} is permissible. From n_{21} to n_2, the maximum torque is M_2. The following applies to forced-ventilated geared motors: From the minimum speed n_{22} to n_2, the maximum torque is M_2

The load capacity c of the gearbox c is the ratio of the gearbox's rated torque to the rated torque of the three-phase motor (calculated in respect of its application to the output shaft). c must always be greater than the application factor k determined for the application.

$$c = \frac{M_{2,zul}}{M_{1N} \cdot i \cdot \eta_{Getr}} > k$$



Notes on ordering

We want to be sure that you receive the correct products in good time.

To allow us to achieve this we need:
- your address and your company data
- our product key for the individual products in this catalogue
- your delivery date and delivery address

Ordering procedure
Please use the ordering information checklist to ensure that you provide all the ordering information required for the various products.

The ordering information checklist, the product key, the basic versions, options, mounting position and position of the system blocks will be found in the General – Product key section.

A list of Lenze's worldwide sales offices can be found on the Internet: www.Lenze.com.



Ordering details checklist

☐ **Offer**

Page __ of __

☐ **Order**

Customer No.

Job No.

Fax No. _____

Sender

Company _____ Made out by (name) _____

Street/P.O. Box _____ Department _____

P.O. Box, City _____ Telephone No. _____

Date _____ Signature _____

Delivery address (if different)

Street/P.O. Box _____ Desired delivery date _____

P.O. Box, City _____ Dispatching notes _____

Invoice recipient (if different)

Street/P.O. Box _____

Postal code, City _____



Ordering details checklist

Customer No.

Job No.

Page __

Quantity

Efficiency class ☐ Standard efficiency ☐ High efficiency (IE2)

Rated frequency ☐ 50 Hz ☐ 60 Hz ☐ 87 Hz

Ratio i

GKS ☐☐ – 3 / 4 M / E V / H / S A / B R / K

Motor frame size ☐☐☐C☐☐

Hollow shaft d = ☐ mm

Flange a_2 = ☐ mm

Mounting position A ☐ B ☐ C ☐ D ☐ E ☐ F ☐

Position of system blocks

Shaft/shrink disc				Flange				Terminal box			
0	3	4	8	0	3	5	8	2	3	4	5
☐	☐	☐	☐	☐	☐	☐	☐	☐	☐	☐	☐

Surface and corrosion protection ☐ OKS-S colour: RAL 7012 ☐ OKS-G (primed)

Options

Special lubricants ☐ CLP HC 320 (synthetic) ☐ CLP HC 220 USDA H1 (for the food industry)

Surface and corrosion protection ☐ OKS-S (small) ☐ OKS-M (medium) RAL ☐ ☐ OKS-L (high) ☐ OKS-G (primed)

Accessories ☐ Torque support for housing foot ☐ Torque support for threaded pitch circle ☐ 2nd output shaft end ☐ Mounting set for hollow-shaft circlip ☐ Shrink disc cover ☐ Hollow shaft cover, hoseproof

Shaft sealing rings ☐ Viton

Breathing ☐ Breather elements for GKS05 ☐ Compensation reservoir in mounting position for GKS09 ... 14-3



Ordering details checklist

Three-phase AC motors options

Customer No. ☐☐☐☐☐☐☐☐

Job No. ☐☐☐☐☐☐☐☐☐☐

Page __

Motor connection

Terminal box
- ☐ with plug-in connector ICN 6-pin. Adhere to permissible rated motor current 20 A!
- ☐ with plug-in connector ICN 8-pin. Adhere to permissible rated motor current 20 A!
- ☐ with plug-in connector HAN10E. Adhere to permissible rated current 16 A!
- ☐ with plug-in connector HAN-Modular. Adhere to permissible rated current 16 / 40 A!

Cable entry
only with M□□MAXX/LL063 ... 132
or terminal box with plug-in connector
in position 1 ☐ 2 ☐ 3 ☐ 4 ☐ 5 ☐

Blower

☐ 1~ ☐ 3~

☐ Terminal box with plug-in connector ICN

Terminal box position 2 ☐ 3 ☐ 4 ☐ 5 ☐

Spring-applied brake

Brake version ☐ Standard ☐ Longlife

Brake size ☐

Characteristic torque ☐ Nm

Rated voltage AC ☐ DC ☐ ☐ V

Rectifier
Only in the case of AC supply voltage

- ☐ Half-wave rectifier
- ☐ Bridge rectifier
- ☐ Bridge/half-wave rectifier (overexcitation)
- ☐ Bridge/half-wave rectifier (holding current reduction)

Brake options
Manual release lever in position 2 ☐ 3 ☐ 4 ☐ 5 ☐

☐ Low-noise version (Standard in the case of brake with speed/position encoder)

6.9



Ordering details checklist

Three-phase AC motors options

Customer No. ☐☐☐☐☐☐☐☐

Job No. ☐☐☐☐☐☐☐☐☐☐

Page __

Speed/position encoder

Resolver	☐ RS1				
Incremental encoder HTL	☐ IG128-24V-H	☐ IG512-24V-H	☐ IG1024-24V-H	☐ IG2048-24V-H	
Incremental encoder TTL		☐ IG512-5V-T	☐ IG1024-5V-T	☐ IG2048-5V-T	
Feedback with ICN connector	☐ IG128-24V-H not possible with plug-in connector!				

Motor protection

☐ PTC ☐ KTY 83-110 ☐ KTY 84-130

Approval

☐ UL/CSA approval: cURus ☐ CCC ☐ China Energy Label

Further options

Indication of supply voltage only for motor frame sizes 112C32 to 225C22

☐ Δ; 400V-50Hz; 460V-60Hz

☐ Y/Δ; 400/230V-50Hz; 460/265V-60Hz (-/400V-87Hz possible in operation with frequency inverter)

☐ Protection cover

☐ 2nd shaft end

☐ Handwheel

☐ Increased centrifugal mass

☐ 2nd nameplate (adhesive nameplate/metal nameplate)



Permissible radial and axial forces at output

Permissible radial force
$F_{rad,per} = \min(f_w \times f_\alpha \times F_{rad,max}$; $f_w \times F_{rad,max}$ at $n_2 \leq 16$ r/min)

Permissible axial force
$F_{ax,per} = F_{ax,max}$ if $F_{rad} = 0$

If F_{rad} **and** $F_{ax} \neq 0$, please contact your Lenze sales office.

Application of forces

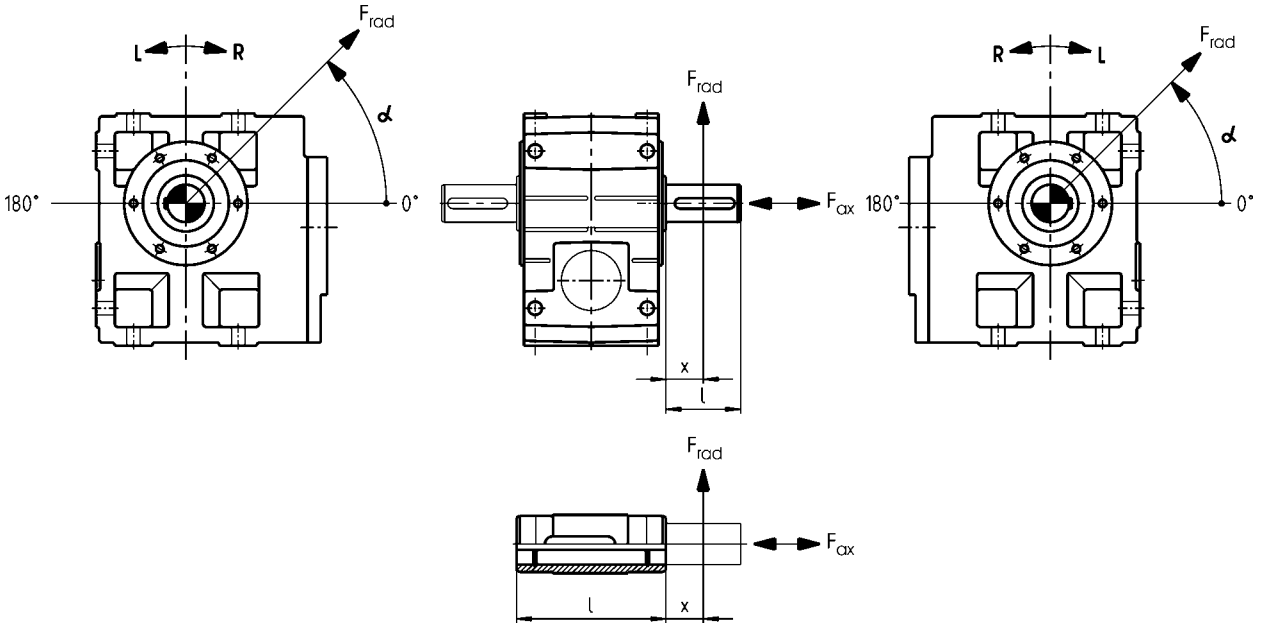

Effective direction factor f_α at output shaft

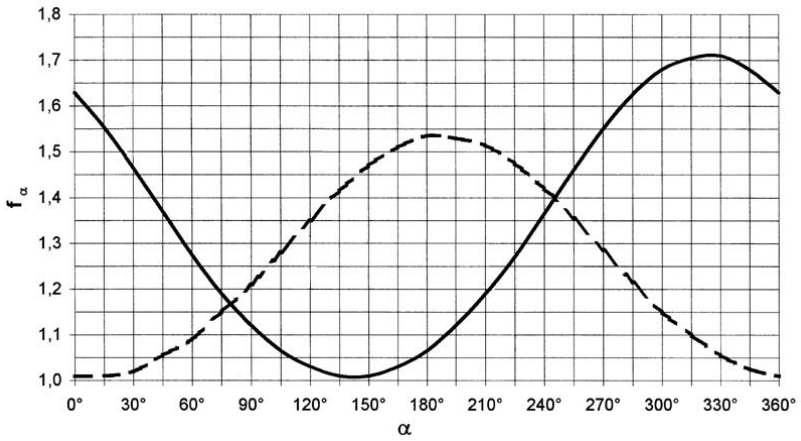

——— Direction of rotation R
— — — Direction of rotation L



Permissible radial and axial forces at output

Additional load factor f_w at output shaft

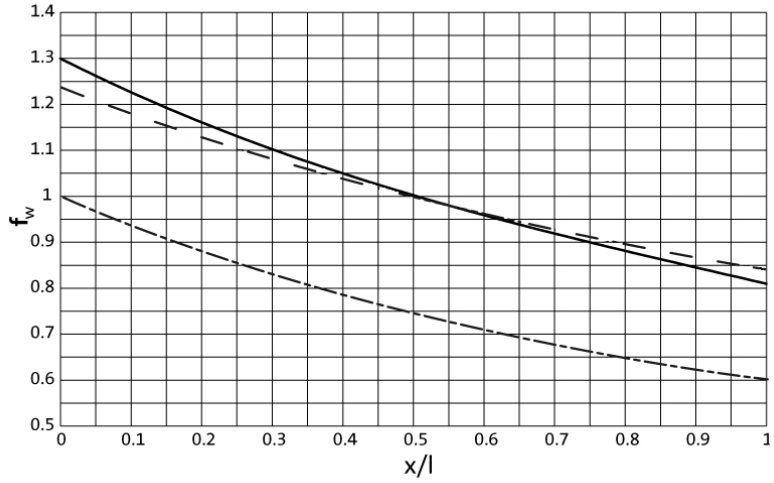

——— Solid shaft (V□□)
— · — Hollow shaft (H□□)
— — — Solid shaft with flange (V□K)

GKS□□-3/4□ H□□

Size	n_2 [r/min]								
Gearbox	630	400	250	160	100	63	40	25	≤16

	Max. radial force, Hollow shaft								
	$F_{rad,max}$	$F_{rad,max}$	$F_{rad,max}$	$F_{rad,max}$	$F_{rad,max}$	$F_{rad,max}$	$F_{rad,max}$	$F_{rad,max}$	$F_{rad,max}$
	[N]	[N]	[N]	[N]	[N]	[N]	[N]	[N]	[N]
GKS04	3100	3900	4500	5100	5900	6800	7000	7000	7000
GKS05	2400	3500	4200	4630	5000	6200	7300	7300	7300
GKS06	3000	4600	5600	6400	7000	8200	10400	12000	12000
GKS07		5400	6300	7400	8700	10500	12500	15100	16000
GKS09		7500	8200	9400	10600	12200	15500	21000	24000
GKS11		9000	10000	11000	14000	16000	18500	25000	30000
GKS14		15000	15500	16500	17500	18500	21000	28000	40000

	Max. axial force, Hollow shaft								
	$F_{ax,max}$	$F_{ax,max}$	$F_{ax,max}$	$F_{ax,max}$	$F_{ax,max}$	$F_{ax,max}$	$F_{ax,max}$	$F_{ax,max}$	$F_{ax,max}$
	[N]	[N]	[N]	[N]	[N]	[N]	[N]	[N]	[N]
GKS04	3300	4200	5000	5500	5500	5500	5500	5500	5500
GKS05	2800	3500	4240	5090	6160	6600	6600	6600	6600
GKS06	3500	4440	5580	6930	8710	10000	10000	10000	10000
GKS07		4900	6230	7820	9940	12600	14000	14000	14000
GKS09		6500	7400	8000	10500	13000	17000	21000	21000
GKS11		7000	8000	9200	12000	14500	18500	27000	27000
GKS14		6000	8000	10000	13000	16000	20000	28000	35000

- Application of force F_{rad}: at hollow shaft end face (x = 0)
- $F_{ax,max}$ only valid with F_{rad} = 0
- Neither radial nor axial forces are permissible for the hollow shaft with shrink disc (S□□).



Permissible radial and axial forces at output

GKS□□-3/4□ V□R

Size	n_2 [r/min]								
Gearbox	630	400	250	160	100	63	40	25	≤16

	Max. radial force, Solid shaft without flange								
	$F_{rad,max}$	$F_{rad,max}$	$F_{rad,max}$	$F_{rad,max}$	$F_{rad,max}$	$F_{rad,max}$	$F_{rad,max}$	$F_{rad,max}$	$F_{rad,max}$
	[N]	[N]	[N]	[N]	[N]	[N]	[N]	[N]	[N]
GKS04	2400	3000	3400	3600	3600	3600	3600	3600	3600
GKS05	2200	2800	3200	3600	4100	4900	5800	5800	5800
GKS06	2700	3700	4300	4900	5300	6200	7900	9000	9000
GKS07		4000	4900	5800	6600	8000	9600	12000	12000
GKS09 [1]		6200	6400	7100	8400	9500	11800	16000	18000
GKS11 [1]		7100	7500	8200	10000	11200	13000	19000	23000
GKS14		57900	61000	64100	65000	65000	65000	65000	65000

	Max. axial force, Solid shaft without flange								
	$F_{ax,max}$	$F_{ax,max}$	$F_{ax,max}$	$F_{ax,max}$	$F_{ax,max}$	$F_{ax,max}$	$F_{ax,max}$	$F_{ax,max}$	$F_{ax,max}$
	[N]	[N]	[N]	[N]	[N]	[N]	[N]	[N]	[N]
GKS04	3300	4200	5000	5500	5500	5500	5500	5500	5500
GKS05	2800	3500	4240	5090	6160	6600	6600	6600	6600
GKS06	3500	4440	5580	6930	8710	10000	10000	10000	10000
GKS07		4900	6230	7820	9940	12600	14000	14000	14000
GKS09 [1]		6500	7400	8000	10500	13000	17000	21000	21000
GKS11 [1]		7000	8000	9200	12000	14500	18500	27000	27000
GKS14		35000	35000	35000	35000	35000	35000	35000	35000

[1] Reinforced output shaft bearings are available on request for V□R versions.

- Application of force F_{rad}: centre of shaft journal (x = l/2)
- $F_{ax,max}$ only valid with F_{rad} = 0



Permissible radial and axial forces at output

GKS□□-3/4□ V□K

Size	n_2 [r/min]								
Gearbox	630	400	250	160	100	63	40	25	≤16

	Max. radial force, Solid shaft with flange								
	$F_{rad,max}$	$F_{rad,max}$	$F_{rad,max}$	$F_{rad,max}$	$F_{rad,max}$	$F_{rad,max}$	$F_{rad,max}$	$F_{rad,max}$	$F_{rad,max}$
	[N]	[N]	[N]	[N]	[N]	[N]	[N]	[N]	[N]
GKS04	3100	3800	4300	4600	4600	4600	4600	4600	4600
GKS05	3800	4640	5420	6280	7000	7000	7000	7000	7000
GKS06	4700	6400	7500	8800	9800	10000	10000	10000	10000
GKS07		7000	8250	9630	11000	13000	14000	14000	14000
GKS09		9900	10500	12000	14000	15000	15000	15000	15000
GKS11		14500	16000	17600	21000	24500	28000	30000	30000
GKS14		20500	23700	27200	31300	35000	41000	43000	43000

	Max. axial force, Solid shaft with flange								
	$F_{ax,max}$	$F_{ax,max}$	$F_{ax,max}$	$F_{ax,max}$	$F_{ax,max}$	$F_{ax,max}$	$F_{ax,max}$	$F_{ax,max}$	$F_{ax,max}$
	[N]	[N]	[N]	[N]	[N]	[N]	[N]	[N]	[N]
GKS04	3300	4200	4400	4400	4400	4400	4400	4400	4400
GKS05	2900	3630	4440	5420	6600	6600	6600	6600	6600
GKS06	3700	4660	5880	7320	9230	10000	10000	10000	10000
GKS07		5700	7000	8500	10400	11500	11500	11500	11500
GKS09		6000	6600	7600	10000	12000	15000	17000	17000
GKS11		7000	7500	8500	10500	13000	17500	27000	27000
GKS14		8400	10000	11500	13000	15000	19000	28000	35000

- Application of force F_{rad}: centre of shaft journal (x = l/2)
- $F_{ax,max}$ only valid with F_{rad} = 0

Output backlash in angular minutes

► Backlash ϕ depending on ratio i

GKS04 to 14-3

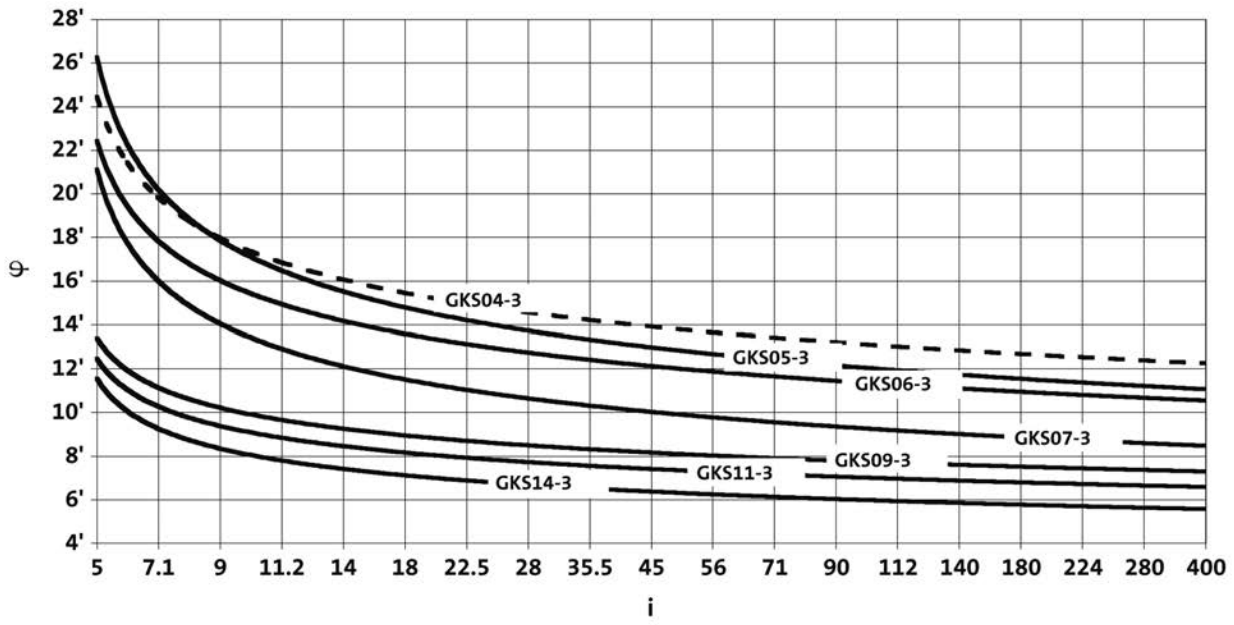

GKS05 to 14-4

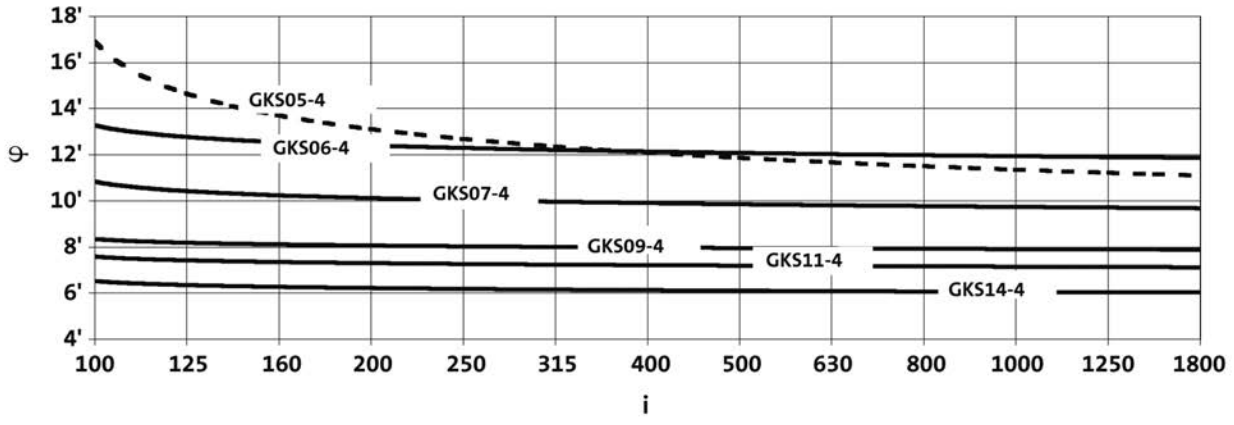

6.9



Moments of inertia

GKS□□-3

► Moment of inertia (J) depending on ratio i

Gearbox			GKS04
5.123	J	[kgcm²]	1.170
7.025	J	[kgcm²]	0.676
8.167	J	[kgcm²]	0.863
8.991	J	[kgcm²]	0.444
11.730	J	[kgcm²]	0.729
13.067	J	[kgcm²]	0.701
14.333	J	[kgcm²]	0.346
16.087	J	[kgcm²]	0.443
17.920	J	[kgcm²]	0.428
20.588	J	[kgcm²]	0.302
22.522	J	[kgcm²]	0.262
25.088	J	[kgcm²]	0.254
28.727	J	[kgcm²]	0.182
32.000	J	[kgcm²]	0.177
35.191	J	[kgcm²]	0.136
39.200	J	[kgcm²]	0.132
44.240	J	[kgcm²]	0.090
50.943	J	[kgcm²]	0.181
56.976	J	[kgcm²]	0.061
64.978	J	[kgcm²]	0.132
72.210	J	[kgcm²]	0.040
79.598	J	[kgcm²]	0.103
90.491	J	[kgcm²]	0.027
100.067	J	[kgcm²]	0.069
111.467	J	[kgcm²]	0.069
128.874	J	[kgcm²]	0.048
143.556	J	[kgcm²]	0.048
163.332	J	[kgcm²]	0.032
181.939	J	[kgcm²]	0.032
204.682	J	[kgcm²]	0.022
228.000	J	[kgcm²]	0.022
269.660	J	[kgcm²]	0.014
300.381	J	[kgcm²]	0.014

Gearbox			GKS05
6.863	J	[kgcm²]	1.900
9.412	J	[kgcm²]	1.170
10.569	J	[kgcm²]	1.600
11.667	J	[kgcm²]	1.647
13.176	J	[kgcm²]	0.711
14.494	J	[kgcm²]	1.045
16.000	J	[kgcm²]	1.040
17.054	J	[kgcm²]	1.505
19.216	J	[kgcm²]	1.474
23.388	J	[kgcm²]	0.964
26.353	J	[kgcm²]	0.948
29.931	J	[kgcm²]	0.674
32.744	J	[kgcm²]	0.584
36.894	J	[kgcm²]	0.576
41.765	J	[kgcm²]	0.419
47.059	J	[kgcm²]	0.414
51.162	J	[kgcm²]	0.321
57.647	J	[kgcm²]	0.317
66.592	J	[kgcm²]	0.200
75.033	J	[kgcm²]	0.198
82.833	J	[kgcm²]	0.145
93.333	J	[kgcm²]	0.144
107.196	J	[kgcm²]	0.091
120.784	J	[kgcm²]	0.091
130.097	J	[kgcm²]	0.067
146.588	J	[kgcm²]	0.066
166.276	J	[kgcm²]	0.043
187.353	J	[kgcm²]	0.042
211.200	J	[kgcm²]	0.081
227.484	J	[kgcm²]	0.060
256.320	J	[kgcm²]	0.060
290.745	J	[kgcm²]	0.038
327.600	J	[kgcm²]	0.038

► The moments of inertia relate to the drive shaft of the gearbox.
► The total moment of inertia is calculated by adding the values of the gearbox, motor and accessories.



Moments of inertia

GKS□□-3

► Moment of inertia (J) depending on ratio i

Gearbox			GKS06
6.485	J	[kgcm²]	5.870
9.196	J	[kgcm²]	5.048
10.147	J	[kgcm²]	4.858
11.382	J	[kgcm²]	2.492
12.612	J	[kgcm²]	3.199
14.824	J	[kgcm²]	4.287
16.699	J	[kgcm²]	4.163
17.809	J	[kgcm²]	2.126
20.329	J	[kgcm²]	2.794
22.902	J	[kgcm²]	2.729
26.017	J	[kgcm²]	1.941
28.461	J	[kgcm²]	1.666
32.063	J	[kgcm²]	1.632
36.303	J	[kgcm²]	1.183
41.472	J	[kgcm²]	2.110
44.471	J	[kgcm²]	0.900
53.074	J	[kgcm²]	1.523
57.882	J	[kgcm²]	0.578
65.207	J	[kgcm²]	0.570
72.000	J	[kgcm²]	0.422
81.111	J	[kgcm²]	0.416
93.176	J	[kgcm²]	0.257
104.967	J	[kgcm²]	0.254
113.082	J	[kgcm²]	0.189
127.392	J	[kgcm²]	0.186
142.941	J	[kgcm²]	0.122
161.029	J	[kgcm²]	0.121
190.080	J	[kgcm²]	0.227
214.133	J	[kgcm²]	0.226
230.688	J	[kgcm²]	0.168
259.880	J	[kgcm²]	0.167
291.600	J	[kgcm²]	0.109
328.500	J	[kgcm²]	0.109

Gearbox			GKS07
5.955	J	[kgcm²]	19.300
8.254	J	[kgcm²]	11.800
9.171	J	[kgcm²]	16.000
10.124	J	[kgcm²]	15.882
11.378	J	[kgcm²]	7.019
12.711	J	[kgcm²]	10.164
14.798	J	[kgcm²]	14.306
16.674	J	[kgcm²]	13.965
17.270	J	[kgcm²]	7.258
20.511	J	[kgcm²]	9.084
23.111	J	[kgcm²]	8.906
25.244	J	[kgcm²]	6.716
28.274	J	[kgcm²]	5.567
31.858	J	[kgcm²]	5.473
36.063	J	[kgcm²]	3.650
40.906	J	[kgcm²]	6.934
44.178	J	[kgcm²]	2.779
50.345	J	[kgcm²]	5.298
57.501	J	[kgcm²]	1.748
64.790	J	[kgcm²]	1.725
70.474	J	[kgcm²]	1.295
79.407	J	[kgcm²]	1.280
92.563	J	[kgcm²]	0.808
104.296	J	[kgcm²]	0.799
112.338	J	[kgcm²]	0.592
126.578	J	[kgcm²]	0.586
140.548	J	[kgcm²]	1.113
158.364	J	[kgcm²]	1.113
184.600	J	[kgcm²]	0.687
208.000	J	[kgcm²]	0.685
224.037	J	[kgcm²]	0.510
252.436	J	[kgcm²]	0.509
283.193	J	[kgcm²]	0.330
319.091	J	[kgcm²]	0.329

► The moments of inertia relate to the drive shaft of the gearbox.
► The total moment of inertia is calculated by adding the values of the gearbox, motor and accessories.



Moments of inertia

GKS□□-3

► Moment of inertia (J) depending on ratio i

Gearbox			GKS09
12.283	J	[kgcm²]	34.200
13.360	J	[kgcm²]	33.400
16.122	J	[kgcm²]	22.600
17.536	J	[kgcm²]	22.200
19.541	J	[kgcm²]	30.600
22.022	J	[kgcm²]	29.900
25.649	J	[kgcm²]	20.500
29.228	J	[kgcm²]	15.900
32.940	J	[kgcm²]	15.600
35.193	J	[kgcm²]	12.200
39.662	J	[kgcm²]	12.000
43.146	J	[kgcm²]	9.000
48.625	J	[kgcm²]	8.870
58.456	J	[kgcm²]	5.540
65.879	J	[kgcm²]	5.470
70.982	J	[kgcm²]	4.140
79.996	J	[kgcm²]	4.100
91.860	J	[kgcm²]	2.630
103.524	J	[kgcm²]	2.610
111.484	J	[kgcm²]	1.920
125.641	J	[kgcm²]	1.900
140.921	J	[kgcm²]	1.260
158.816	J	[kgcm²]	1.250
182.000	J	[kgcm²]	2.250
205.111	J	[kgcm²]	2.240
220.882	J	[kgcm²]	1.660
248.930	J	[kgcm²]	1.650
279.205	J	[kgcm²]	1.100
314.659	J	[kgcm²]	1.100

Gearbox			GKS11
12.094	J	[kgcm²]	104.000
13.154	J	[kgcm²]	101.000
15.874	J	[kgcm²]	68.000
17.265	J	[kgcm²]	66.500
19.515	J	[kgcm²]	90.300
21.989	J	[kgcm²]	90.400
25.615	J	[kgcm²]	61.200
28.021	J	[kgcm²]	52.200
31.573	J	[kgcm²]	51.300
35.741	J	[kgcm²]	36.800
40.272	J	[kgcm²]	36.200
43.783	J	[kgcm²]	27.900
49.333	J	[kgcm²]	27.500
57.683	J	[kgcm²]	17.700
64.995	J	[kgcm²]	17.500
70.887	J	[kgcm²]	13.000
79.873	J	[kgcm²]	12.900
91.737	J	[kgcm²]	8.300
103.365	J	[kgcm²]	8.210
111.335	J	[kgcm²]	6.050
125.448	J	[kgcm²]	5.990
140.732	J	[kgcm²]	3.960
158.571	J	[kgcm²]	3.930
186.572	J	[kgcm²]	7.070
210.222	J	[kgcm²]	7.050
226.431	J	[kgcm²]	5.210
255.133	J	[kgcm²]	5.200
286.219	J	[kgcm²]	3.440
322.500	J	[kgcm²]	3.430

► The moments of inertia relate to the drive shaft of the gearbox.
► The total moment of inertia is calculated by adding the values of the gearbox, motor and accessories.



Moments of inertia

GKS□□-3

► Moment of inertia (J) depending on ratio i

Gearbox			GKS14
12.435	J	[kgcm²]	283.000
13.525	J	[kgcm²]	275.000
16.646	J	[kgcm²]	198.000
18.311	J	[kgcm²]	173.000
20.065	J	[kgcm²]	249.000
22.609	J	[kgcm²]	243.000
24.696	J	[kgcm²]	183.000
27.165	J	[kgcm²]	159.000
30.609	J	[kgcm²]	156.000
34.692	J	[kgcm²]	111.000
39.089	J	[kgcm²]	109.000
42.531	J	[kgcm²]	82.400
47.923	J	[kgcm²]	81.100
56.251	J	[kgcm²]	54.200
63.382	J	[kgcm²]	53.500
68.942	J	[kgcm²]	38.900
77.681	J	[kgcm²]	38.400
90.551	J	[kgcm²]	25.100
102.029	J	[kgcm²]	24.900
109.896	J	[kgcm²]	18.300
123.826	J	[kgcm²]	18.100
138.913	J	[kgcm²]	12.000
156.522	J	[kgcm²]	11.900
186.572	J	[kgcm²]	21.600
210.222	J	[kgcm²]	21.500
226.431	J	[kgcm²]	15.900
255.133	J	[kgcm²]	15.800
286.219	J	[kgcm²]	10.500
322.500	J	[kgcm²]	10.500

► The moments of inertia relate to the drive shaft of the gearbox.
► The total moment of inertia is calculated by adding the values of the gearbox, motor and accessories.



Moments of inertia

GKS□□-4

► Moment of inertia (J) depending on ratio i

Gearbox			GKS05
95.238	J	[kgcm²]	0.143
114.987	J	[kgcm²]	0.196
126.933	J	[kgcm²]	0.196
146.667	J	[kgcm²]	0.142
161.905	J	[kgcm²]	0.141
185.547	J	[kgcm²]	0.195
209.067	J	[kgcm²]	0.195
225.867	J	[kgcm²]	0.073
236.667	J	[kgcm²]	0.141
289.917	J	[kgcm²]	0.108
326.667	J	[kgcm²]	0.108
364.467	J	[kgcm²]	0.073
410.667	J	[kgcm²]	0.073
469.389	J	[kgcm²]	0.050
510.000	J	[kgcm²]	0.023
528.889	J	[kgcm²]	0.050
594.894	J	[kgcm²]	0.033
670.303	J	[kgcm²]	0.033
820.760	J	[kgcm²]	0.050
924.800	J	[kgcm²]	0.050
1040.215	J	[kgcm²]	0.033
1172.073	J	[kgcm²]	0.033
1303.560	J	[kgcm²]	0.023
1468.800	J	[kgcm²]	0.023
1717.389	J	[kgcm²]	0.014
1935.086	J	[kgcm²]	0.014

Gearbox			GKS06
103.721	J	[kgcm²]	0.300
113.205	J	[kgcm²]	0.234
127.059	J	[kgcm²]	0.264
140.816	J	[kgcm²]	0.213
155.647	J	[kgcm²]	0.191
174.336	J	[kgcm²]	0.112
202.588	J	[kgcm²]	0.168
224.524	J	[kgcm²]	0.074
252.000	J	[kgcm²]	0.155
279.286	J	[kgcm²]	0.069
316.800	J	[kgcm²]	0.102
361.429	J	[kgcm²]	0.064
408.000	J	[kgcm²]	0.068
458.067	J	[kgcm²]	0.042
517.091	J	[kgcm²]	0.044
555.927	J	[kgcm²]	0.041
640.800	J	[kgcm²]	0.062
696.668	J	[kgcm²]	0.028
812.137	J	[kgcm²]	0.040
914.907	J	[kgcm²]	0.040
1017.741	J	[kgcm²]	0.028
1146.529	J	[kgcm²]	0.028
1340.834	J	[kgcm²]	0.017
1510.507	J	[kgcm²]	0.017

► The moments of inertia relate to the drive shaft of the gearbox.
► The total moment of inertia is calculated by adding the values of the gearbox, motor and accessories.



Moments of inertia

GKS□□-4

► Moment of inertia (J) depending on ratio i

Gearbox			GKS07
103.039	J	[kgcm²]	0.837
112.391	J	[kgcm²]	0.632
126.222	J	[kgcm²]	0.729
137.748	J	[kgcm²]	0.571
154.622	J	[kgcm²]	0.527
179.201	J	[kgcm²]	0.283
201.254	J	[kgcm²]	0.454
222.909	J	[kgcm²]	0.199
246.659	J	[kgcm²]	0.417
273.199	J	[kgcm²]	0.184
321.049	J	[kgcm²]	0.256
358.829	J	[kgcm²]	0.169
399.353	J	[kgcm²]	0.182
464.367	J	[kgcm²]	0.106
516.810	J	[kgcm²]	0.113
563.572	J	[kgcm²]	0.101
636.581	J	[kgcm²]	0.161
683.972	J	[kgcm²]	0.074
823.810	J	[kgcm²]	0.101
928.237	J	[kgcm²]	0.101
999.806	J	[kgcm²]	0.073
1126.542	J	[kgcm²]	0.073
1277.842	J	[kgcm²]	0.047
1439.822	J	[kgcm²]	0.047

Gearbox			GKS09
100.551	J	[kgcm²]	2.480
113.320	J	[kgcm²]	2.456
123.275	J	[kgcm²]	2.107
138.929	J	[kgcm²]	2.091
151.012	J	[kgcm²]	1.516
170.188	J	[kgcm²]	1.505
204.596	J	[kgcm²]	1.244
230.577	J	[kgcm²]	1.239
248.439	J	[kgcm²]	1.128
279.986	J	[kgcm²]	1.125
323.365	J	[kgcm²]	0.713
364.427	J	[kgcm²]	0.710
402.234	J	[kgcm²]	0.509
453.311	J	[kgcm²]	0.507
520.538	J	[kgcm²]	0.466
586.638	J	[kgcm²]	0.465
631.744	J	[kgcm²]	0.443
711.965	J	[kgcm²]	0.443
817.551	J	[kgcm²]	0.276
921.367	J	[kgcm²]	0.276
992.209	J	[kgcm²]	0.201
1118.204	J	[kgcm²]	0.201
1254.197	J	[kgcm²]	0.130
1413.461	J	[kgcm²]	0.130

► The moments of inertia relate to the drive shaft of the gearbox.
► The total moment of inertia is calculated by adding the values of the gearbox, motor and accessories.



Moments of inertia

GKS□□-4

► Moment of inertia (J) depending on ratio i

Gearbox			GKS11
102.119	J	[kgcm²]	7.276
115.063	J	[kgcm²]	7.205
125.095	J	[kgcm²]	6.233
140.952	J	[kgcm²]	6.186
153.242	J	[kgcm²]	4.500
172.667	J	[kgcm²]	4.469
201.890	J	[kgcm²]	3.735
227.481	J	[kgcm²]	3.717
248.106	J	[kgcm²]	3.355
279.556	J	[kgcm²]	3.343
322.931	J	[kgcm²]	2.088
363.866	J	[kgcm²]	2.081
395.787	J	[kgcm²]	1.521
445.958	J	[kgcm²]	1.517
512.196	J	[kgcm²]	1.385
577.122	J	[kgcm²]	1.382
621.619	J	[kgcm²]	1.314
700.416	J	[kgcm²]	1.312
816.455	J	[kgcm²]	0.819
919.949	J	[kgcm²]	0.818
990.879	J	[kgcm²]	0.600
1116.484	J	[kgcm²]	0.599
1252.516	J	[kgcm²]	0.386
1411.286	J	[kgcm²]	0.385

Gearbox			GKS14
97.467	J	[kgcm²]	23.471
109.822	J	[kgcm²]	23.232
119.493	J	[kgcm²]	19.936
134.640	J	[kgcm²]	19.777
158.039	J	[kgcm²]	16.438
178.072	J	[kgcm²]	16.348
193.754	J	[kgcm²]	12.076
218.315	J	[kgcm²]	12.016
237.467	J	[kgcm²]	10.871
267.568	J	[kgcm²]	10.830
321.729	J	[kgcm²]	6.420
362.512	J	[kgcm²]	6.398
390.671	J	[kgcm²]	4.749
440.193	J	[kgcm²]	4.734
513.121	J	[kgcm²]	4.330
578.164	J	[kgcm²]	4.322
622.742	J	[kgcm²]	4.122
701.681	J	[kgcm²]	4.116
805.901	J	[kgcm²]	2.620
908.058	J	[kgcm²]	2.617
978.071	J	[kgcm²]	1.912
1102.052	J	[kgcm²]	1.909
1236.326	J	[kgcm²]	1.259
1393.043	J	[kgcm²]	1.258

► The moments of inertia relate to the drive shaft of the gearbox.
► The total moment of inertia is calculated by adding the values of the gearbox, motor and accessories.



Weights

GKS□□-3M HAR / HBR

			063C32 063C42	071C32 071C42	080C32 080C42	090C32	100C12 100C32	112C22	132C12 132C22	132C32
GKS04	m	[kg]	16	18	23					
GKS05	m	[kg]	26	28	33	41				
GKS06	m	[kg]	40	42	47	55	64			
GKS07	m	[kg]			73	81	89	102	132	
GKS09	m	[kg]				129	138	150	181	
GKS11	m	[kg]					237	249	279	
GKS14	m	[kg]						420	447	

GKS□□-3M HAK

			063C32 063C42	071C32 071C42	080C32 080C42	090C32	100C12 100C32	112C22	132C12 132C22	132C32
GKS04	m	[kg]	19	21	26					
GKS05	m	[kg]	30	32	37	45				
GKS06	m	[kg]	47	49	54	62	71			
GKS07	m	[kg]			84	92	100	113	143	
GKS09	m	[kg]				145	154	166	197	
GKS11	m	[kg]					261	273	303	
GKS14	m	[kg]						453	480	

► Weights with oil filling for mounting position A; all values are approximate.
The weights relate to the basic version. Bear in mind that additional weights may be needed, e.g. for motor options.



Weights

GKS□□-3M VAR / VBR

			063C32 063C42	071C32 071C42	080C32 080C42	090C32	100C12 100C32	112C22	132C12 132C22	132C32
GKS04	m	[kg]	17	19	24					
GKS05	m	[kg]	27	29	34	42				
GKS06	m	[kg]	43	45	49	58	66			
GKS07	m	[kg]			78	86	94	107	137	
GKS09	m	[kg]				137	146	158	189	
GKS11	m	[kg]					253	265	295	
GKS14	m	[kg]						453	480	

GKS□□-3M VAK

			063C32 063C42	071C32 071C42	080C32 080C42	090C32	100C12 100C32	112C22	132C12 132C22	132C32
GKS04	m	[kg]	19	21	26					
GKS05	m	[kg]	31	33	38	46				
GKS06	m	[kg]	50	52	56	65	73			
GKS07	m	[kg]			89	97	105	118	148	
GKS09	m	[kg]				153	162	174	205	
GKS11	m	[kg]					277	289	319	
GKS14	m	[kg]						486	513	

► Weights with oil filling for mounting position A; all values are approximate.
The weights relate to the basic version. Bear in mind that additional weights may be needed, e.g. for motor options.



Weights

GKS□□-3M SAR / SBR

			063C32 063C42	071C32 071C42	080C32 080C42	090C32	100C12 100C32	112C22	132C12 132C22	132C32
GKS04	m	[kg]	17	19	24					
GKS05	m	[kg]	27	29	34	42				
GKS06	m	[kg]	41	43	48	56	65			
GKS07	m	[kg]			74	82	91	104	133	
GKS09	m	[kg]				132	141	153	184	
GKS11	m	[kg]					242	254	284	
GKS14	m	[kg]						431	458	

GKS□□-3M SAK

			063C32 063C42	071C32 071C42	080C32 080C42	090C32	100C12 100C32	112C22	132C12 132C22	132C32
GKS04	m	[kg]	19	21	26					
GKS05	m	[kg]	31	33	38	46				
GKS06	m	[kg]	48	50	55	63	72			
GKS07	m	[kg]			85	93	102	115	144	
GKS09	m	[kg]				148	157	169	200	
GKS11	m	[kg]					266	278	308	
GKS14	m	[kg]						464	491	

► Weights with oil filling for mounting position A; all values are approximate.
The weights relate to the basic version. Bear in mind that additional weights may be needed, e.g. for motor options.



Weights

GKS□□-4M HAR / HBR

			063C32 063C42	071C32 071C42	080C32	080C42	090C32	100C12 100C32	112C22	132C12 132C22	132C32
GKS05	m	[kg]	27								
GKS06	m	[kg]	44	46	51						
GKS07	m	[kg]	74	76	81		89				
GKS09	m	[kg]	127	129	134		142	151	164		
GKS11	m	[kg]			242		250	258	271	301	
GKS14	m	[kg]					435	444	456	487	

GKS□□-4M HAK

			063C32 063C42	071C32 071C42	080C32	080C42	090C32	100C12 100C32	112C22	132C12 132C22	132C32
GKS05	m	[kg]	31								
GKS06	m	[kg]	51	53	58						
GKS07	m	[kg]	85	87	92		100				
GKS09	m	[kg]	143	145	150		158	167	180		
GKS11	m	[kg]			266		274	282	295	325	
GKS14	m	[kg]					468	477	489	520	

► Weights with oil filling for mounting position A; all values are approximate.
The weights relate to the basic version. Bear in mind that additional weights may be needed, e.g. for motor options.



Weights

GKS□□-4M VAR / VBR

			063C32 063C42	071C32 071C42	080C32	080C42	090C32	100C12 100C32	112C22	132C12 132C22	132C32
GKS05	m	[kg]	28								
GKS06	m	[kg]	46	48	53						
GKS07	m	[kg]	79	81	86		94				
GKS09	m	[kg]	135	137	142		150	159	172		
GKS11	m	[kg]			258		266	274	287	317	
GKS14	m	[kg]					468	477	489	520	

GKS□□-4M VAK

			063C32 063C42	071C32 071C42	080C32	080C42	090C32	100C12 100C32	112C22	132C12 132C22	132C32
GKS05	m	[kg]	32								
GKS06	m	[kg]	53	55	60						
GKS07	m	[kg]	90	92	97		105				
GKS09	m	[kg]	151	153	158		166	175	188		
GKS11	m	[kg]			282		290	298	311	341	
GKS14	m	[kg]					501	510	522	553	

► Weights with oil filling for mounting position A; all values are approximate.
The weights relate to the basic version. Bear in mind that additional weights may be needed, e.g. for motor options.



Weights

GKS□□-4M SAR / SBR

			063C32 063C42	071C32 071C42	080C32	080C42	090C32	100C12 100C32	112C22	132C12 132C22	132C32
GKS05	m	[kg]	28								
GKS06	m	[kg]	45	47	52						
GKS07	m	[kg]	75	78	82		90				
GKS09	m	[kg]	130	132	137		145	154	167		
GKS11	m	[kg]			247		255	263	276	306	
GKS14	m	[kg]					446	455	467	498	

GKS□□-4M SAK

			063C32 063C42	071C32 071C42	080C32	080C42	090C32	100C12 100C32	112C22	132C12 132C22	132C32
GKS05	m	[kg]	32								
GKS06	m	[kg]	52	54	59						
GKS07	m	[kg]	86	89	93		101				
GKS09	m	[kg]	146	148	153		161	170	183		
GKS11	m	[kg]			271		279	287	300	330	
GKS14	m	[kg]					479	488	500	531	

► Weights with oil filling for mounting position A; all values are approximate.
The weights relate to the basic version. Bear in mind that additional weights may be needed, e.g. for motor options.



Selection tables

► 120 Hz: P_N = 0.55 kW

n_{22}/n_2 = 1 ... 24.0

n_1 = 143.3 ... 3440 r/min

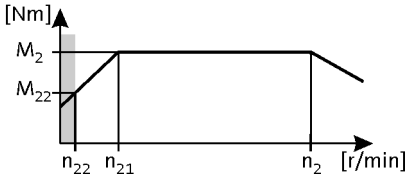

n_{22}	n_{21}		n_2	M_{22}	M_2	c	i			
[r/min]	[r/min]		[r/min]	[Nm]	[Nm]					
16	67	-	383	9.9	13	4.5	8.991	GKS04-3M□□□063C32	E84AV□□□5514□□0	66
15	61	-	350	11	14	4.5	9.836	GKS04-3M□□□063C32	E84AV□□□5514□□0	66
11	46	-	261	15	19	3.9	13.176	GKS05-3M□□□063C32	E84AV□□□5514□□0	66
10	42	-	240	16	21	4.5	14.333	GKS04-3M□□□063C32	E84AV□□□5514□□0	66
7.0	29	-	167	23	30	4.5	20.588	GKS04-3M□□□063C32	E84AV□□□5514□□0	66
6.4	27	-	153	25	33	4.2	22.522	GKS04-3M□□□063C32	E84AV□□□5514□□0	66
5.7	24	-	137	28	36	3.5	25.088	GKS04-3M□□□063C32	E84AV□□□5514□□0	66
5.0	21	-	120	32	42	3.3	28.727	GKS04-3M□□□063C32	E84AV□□□5514□□0	66
4.5	19	-	108	35	46	2.7	32.000	GKS04-3M□□□063C32	E84AV□□□5514□□0	66
4.1	17	-	98	39	51	2.7	35.191	GKS04-3M□□□063C32	E84AV□□□5514□□0	66
3.7	15	-	88	43	57	2.2	39.200	GKS04-3M□□□063C32	E84AV□□□5514□□0	66
3.2	14	-	78	49	64	2.5	44.240	GKS04-3M□□□063C32	E84AV□□□5514□□0	66
2.8	12	-	68	56	74	2.1	50.943	GKS04-3M□□□063C32	E84AV□□□5514□□0	66
2.5	11	-	60	63	83	2.0	56.976	GKS04-3M□□□063C32	E84AV□□□5514□□0	66
2.2	9.2	-	53	71	94	1.7	64.978	GKS04-3M□□□063C32	E84AV□□□5514□□0	66
2.2	9.0	-	52	73	97	3.0	66.592	GKS05-3M□□□063C32	E84AV□□□5514□□0	66
2.0	8.3	-	48	79	105	1.6	72.210	GKS04-3M□□□063C32	E84AV□□□5514□□0	66
1.9	8.0	-	46	82	109	2.5	75.033	GKS05-3M□□□063C32	E84AV□□□5514□□0	66
1.8	7.5	-	43	87	115	1.4	79.598	GKS04-3M□□□063C32	E84AV□□□5514□□0	66
1.7	7.2	-	42	91	120	2.4	82.833	GKS05-3M□□□063C32	E84AV□□□5514□□0	66
1.6	6.6	-	38	99	131	1.2	90.491	GKS04-3M□□□063C32	E84AV□□□5514□□0	66
1.5	6.4	-	37	102	135	2.0	93.333	GKS05-3M□□□063C32	E84AV□□□5514□□0	66
1.5	6.3	-	36	103	136	1.1	95.238	GKS05-4M□□□063C32	E84AV□□□5514□□0	74
1.4	6.0	-	34	110	145	1.1	100.067	GKS04-3M□□□063C32	E84AV□□□5514□□0	66
1.3	5.6	-	32	118	156	1.8	107.196	GKS05-3M□□□063C32	E84AV□□□5514□□0	66
1.3	5.4	-	31	122	162	1.0	111.467	GKS04-3M□□□063C32	E84AV□□□5514□□0	66
1.3	5.2	-	30	124	164	1.5	114.987	GKS05-4M□□□063C32	E84AV□□□5514□□0	74
1.3	5.3	-	30	122	161	3.2	113.205	GKS06-4M□□□063C32	E84AV□□□5514□□0	74
1.2	5.0	-	29	133	175	1.7	120.784	GKS05-3M□□□063C32	E84AV□□□5514□□0	66
1.1	4.7	-	27	142	187	1.0	128.874	GKS04-3M□□□063C32	E84AV□□□5514□□0	66
1.1	4.7	-	27	137	181	1.5	126.933	GKS05-4M□□□063C32	E84AV□□□5514□□0	74
1.1	4.6	-	26	143	189	1.7	130.097	GKS05-3M□□□063C32	E84AV□□□5514□□0	66
1.0	4.1	-	24	158	209	1.2	146.667	GKS05-4M□□□063C32	E84AV□□□5514□□0	74
1.0	4.1	-	24	161	213	1.4	146.588	GKS05-3M□□□063C32	E84AV□□□5514□□0	66
1.0	4.3	-	24	152	201	2.6	140.816	GKS06-4M□□□063C32	E84AV□□□5514□□0	74
1.0	4.2	-	24	157	207	2.8	142.941	GKS06-3M□□□063C32	E84AV□□□5514□□0	66
0.9	3.9	-	22	168	222	3.0	155.647	GKS06-4M□□□063C32	E84AV□□□5514□□0	74
0.9	3.7	-	21	175	231	1.2	161.905	GKS05-4M□□□063C32	E84AV□□□5514□□0	74
0.9	3.6	-	21	183	241	1.3	166.276	GKS05-3M□□□063C32	E84AV□□□5514□□0	66
0.9	3.7	-	21	177	234	2.6	161.029	GKS06-3M□□□063C32	E84AV□□□5514□□0	66
0.8	3.4	-	20	188	249	2.1	174.336	GKS06-4M□□□063C32	E84AV□□□5514□□0	74



Selection tables

► 120 Hz: P_N = 0.55 kW

n_{22}/n_2 = 1 ... 24.0

n_1 = 143.3 ... 3440 r/min

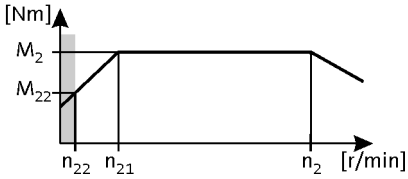

n_{22}	n_{21}		n_2	M_{22}	M_2	c	i			
[r/min]	[r/min]		[r/min]	[Nm]	[Nm]					
0.8	3.2	-	19	200	265	1.2	185.547	GKS05-4M□□□063C32	E84AV□□□5514□□0	74
0.8	3.2	-	18	206	272	1.1	187.353	GKS05-3M□□□063C32	E84AV□□□5514□□0	66
0.8	3.2	-	18	209	276	2.4	190.080	GKS06-3M□□□063C32	E84AV□□□5514□□0	66
0.7	2.9	-	17	226	298	1.0	209.067	GKS05-4M□□□063C32	E84AV□□□5514□□0	74
0.7	3.0	-	17	219	289	2.3	202.588	GKS06-4M□□□063C32	E84AV□□□5514□□0	74
0.7	2.8	-	16	232	306	1.0	211.200	GKS05-3M□□□063C32	E84AV□□□5514□□0	66
0.7	2.8	-	16	235	311	2.0	214.133	GKS06-3M□□□063C32	E84AV□□□5514□□0	66
0.6	2.5	-	15	255	337	0.9	236.667	GKS05-4M□□□063C32	E84AV□□□5514□□0	74
0.6	2.7	-	15	242	320	1.6	224.524	GKS06-4M□□□063C32	E84AV□□□5514□□0	74
0.6	2.6	-	15	253	335	2.0	230.688	GKS06-3M□□□063C32	E84AV□□□5514□□0	66
0.6	2.7	-	15	241	318	3.2	222.909	GKS07-4M□□□063C32	E84AV□□□5514□□0	74
0.6	2.4	-	14	272	359	1.9	252.000	GKS06-4M□□□063C32	E84AV□□□5514□□0	74
0.6	2.3	-	13	285	377	1.6	259.880	GKS06-3M□□□063C32	E84AV□□□5514□□0	66
0.5	2.2	-	13	295	390	2.6	273.199	GKS07-4M□□□063C32	E84AV□□□5514□□0	74
0.5	2.2	-	12	301	398	1.3	279.286	GKS06-4M□□□063C32	E84AV□□□5514□□0	74
0.5	2.1	-	12	320	423	1.6	291.600	GKS06-3M□□□063C32	E84AV□□□5514□□0	66
0.4	1.8	-	11	361	476	1.3	328.500	GKS06-3M□□□063C32	E84AV□□□5514□□0	66
0.5	1.9	-	11	342	452	1.5	316.800	GKS06-4M□□□063C32	E84AV□□□5514□□0	74
0.5	1.9	-	11	346	458	2.8	321.049	GKS07-4M□□□063C32	E84AV□□□5514□□0	74
0.4	1.7	-	9.6	387	512	2.0	358.829	GKS07-4M□□□063C32	E84AV□□□5514□□0	74
0.4	1.7	-	9.5	390	515	1.0	361.429	GKS06-4M□□□063C32	E84AV□□□5514□□0	74
0.4	1.5	-	8.6	431	569	2.2	399.353	GKS07-4M□□□063C32	E84AV□□□5514□□0	74
0.4	1.5	-	8.4	440	582	1.2	408.000	GKS06-4M□□□063C32	E84AV□□□5514□□0	74
0.3	1.3	-	7.4	501	662	1.5	464.367	GKS07-4M□□□063C32	E84AV□□□5514□□0	74
0.3	1.2	-	6.7	558	737	0.9	517.091	GKS06-4M□□□063C32	E84AV□□□5514□□0	74
0.3	1.2	-	6.7	558	737	1.7	516.810	GKS07-4M□□□063C32	E84AV□□□5514□□0	74
0.3	1.1	-	6.1	608	803	1.3	563.572	GKS07-4M□□□063C32	E84AV□□□5514□□0	74
0.2	0.9	-	5.4	687	908	1.4	636.581	GKS07-4M□□□063C32	E84AV□□□5514□□0	74
0.2	0.9	-	5.0	738	975	1.0	683.972	GKS07-4M□□□063C32	E84AV□□□5514□□0	74
0.2	0.7	-	4.2	889	1174	1.1	823.810	GKS07-4M□□□063C32	E84AV□□□5514□□0	74
0.2	0.7	-	4.2	882	1166	2.5	817.551	GKS09-4M□□□063C32	E84AV□□□5514□□0	74
0.2	0.7	-	3.7	994	1314	2.2	921.367	GKS09-4M□□□063C32	E84AV□□□5514□□0	74
0.1	0.6	-	3.5	1071	1415	2.0	992.209	GKS09-4M□□□063C32	E84AV□□□5514□□0	74
0.1	0.5	-	3.1	1207	1594	1.8	1118.204	GKS09-4M□□□063C32	E84AV□□□5514□□0	74
0.1	0.5	-	2.7	1353	1788	1.6	1254.197	GKS09-4M□□□063C32	E84AV□□□5514□□0	74
0.1	0.4	-	2.4	1525	2015	1.5	1413.461	GKS09-4M□□□063C32	E84AV□□□5514□□0	74



Selection tables

► 120 Hz: P_N = 0.75 kW

n_{22}/n_2 = 1 ... 24.0

n_1 = 141.7 ... 3400 r/min

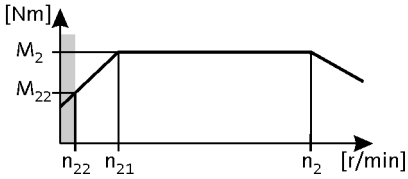

n_{22}	n_{21}		n_2	M_{22}	M_2	c	i			
[r/min]	[r/min]		[r/min]	[Nm]	[Nm]					
16	67	-	378	14	18	3.3	8.991	GKS04-3M□□□063C42	E84AV□□□7514□□0	66
14	61	-	346	15	20	3.3	9.836	GKS04-3M□□□063C42	E84AV□□□7514□□0	66
11	46	-	258	20	26	2.9	13.176	GKS05-3M□□□063C42	E84AV□□□7514□□0	66
9.9	42	-	237	22	29	3.3	14.333	GKS04-3M□□□063C42	E84AV□□□7514□□0	66
6.9	29	-	165	31	41	3.3	20.588	GKS04-3M□□□063C42	E84AV□□□7514□□0	66
6.3	27	-	151	34	45	3.1	22.522	GKS04-3M□□□063C42	E84AV□□□7514□□0	66
5.7	24	-	136	38	50	2.5	25.088	GKS04-3M□□□063C42	E84AV□□□7514□□0	66
4.9	21	-	118	43	58	2.4	28.727	GKS04-3M□□□063C42	E84AV□□□7514□□0	66
4.4	19	-	106	48	64	2.0	32.000	GKS04-3M□□□063C42	E84AV□□□7514□□0	66
4.3	18	-	104	49	66	2.9	32.744	GKS05-3M□□□063C42	E84AV□□□7514□□0	66
4.0	17	-	97	53	70	2.0	35.191	GKS04-3M□□□063C42	E84AV□□□7514□□0	66
3.8	16	-	92	55	74	2.9	36.894	GKS05-3M□□□063C42	E84AV□□□7514□□0	66
3.6	15	-	87	59	78	1.6	39.200	GKS04-3M□□□063C42	E84AV□□□7514□□0	66
3.4	14	-	81	63	84	3.0	41.765	GKS05-3M□□□063C42	E84AV□□□7514□□0	66
3.2	14	-	77	66	89	1.8	44.240	GKS04-3M□□□063C42	E84AV□□□7514□□0	66
3.0	13	-	72	70	94	2.8	47.059	GKS05-3M□□□063C42	E84AV□□□7514□□0	66
2.8	12	-	67	76	102	1.5	50.943	GKS04-3M□□□063C42	E84AV□□□7514□□0	66
2.5	11	-	60	85	114	1.4	56.976	GKS04-3M□□□063C42	E84AV□□□7514□□0	66
2.2	9.2	-	52	97	130	1.2	64.978	GKS04-3M□□□063C42	E84AV□□□7514□□0	66
2.1	9.0	-	51	100	133	2.1	66.592	GKS05-3M□□□063C42	E84AV□□□7514□□0	66
2.0	8.3	-	47	108	145	1.1	72.210	GKS04-3M□□□063C42	E84AV□□□7514□□0	66
1.9	8.0	-	45	112	150	1.8	75.033	GKS05-3M□□□063C42	E84AV□□□7514□□0	66
1.8	7.5	-	43	119	159	1.0	79.598	GKS04-3M□□□063C42	E84AV□□□7514□□0	66
1.7	7.2	-	41	124	166	1.7	82.833	GKS05-3M□□□063C42	E84AV□□□7514□□0	66
1.5	6.4	-	37	140	186	2.6	93.176	GKS06-3M□□□063C42	E84AV□□□7514□□0	66
1.5	6.4	-	36	140	187	1.5	93.333	GKS05-3M□□□063C42	E84AV□□□7514□□0	66
1.4	5.8	-	33	153	204	2.9	103.721	GKS06-4M□□□063C42	E84AV□□□7514□□0	74
1.3	5.6	-	32	160	215	1.3	107.196	GKS05-3M□□□063C42	E84AV□□□7514□□0	66
1.4	5.7	-	32	157	210	2.6	104.967	GKS06-3M□□□063C42	E84AV□□□7514□□0	66
1.2	5.2	-	30	169	226	1.1	114.987	GKS05-4M□□□063C42	E84AV□□□7514□□0	74
1.3	5.3	-	30	167	223	2.3	113.205	GKS06-4M□□□063C42	E84AV□□□7514□□0	74
1.3	5.3	-	30	169	226	2.5	113.082	GKS06-3M□□□063C42	E84AV□□□7514□□0	66
1.2	5.0	-	28	181	242	1.3	120.784	GKS05-3M□□□063C42	E84AV□□□7514□□0	66
1.1	4.7	-	27	187	250	1.1	126.933	GKS05-4M□□□063C42	E84AV□□□7514□□0	74
1.1	4.7	-	27	191	255	2.4	127.392	GKS06-3M□□□063C42	E84AV□□□7514□□0	66
1.1	4.7	-	27	187	250	2.6	127.059	GKS06-4M□□□063C42	E84AV□□□7514□□0	74
1.1	4.6	-	26	195	260	1.2	130.097	GKS05-3M□□□063C42	E84AV□□□7514□□0	66
1.0	4.3	-	24	207	277	1.9	140.816	GKS06-4M□□□063C42	E84AV□□□7514□□0	74
1.0	4.2	-	24	214	286	2.0	142.941	GKS06-3M□□□063C42	E84AV□□□7514□□0	66
1.0	4.1	-	23	219	293	1.0	146.588	GKS05-3M□□□063C42	E84AV□□□7514□□0	66
0.9	3.9	-	22	229	306	2.2	155.647	GKS06-4M□□□063C42	E84AV□□□7514□□0	74



Selection tables

► 120 Hz: P_N = 0.75 kW

n_{22}/n_2 = 1 ... 24.0

n_1 = 141.7 ... 3400 r/min

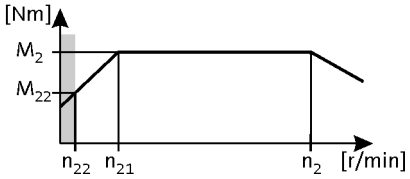

n_{22} [r/min]	n_{21} [r/min]		n_2 [r/min]	M_{22} [Nm]	M_2 [Nm]	c	i			
0.9	3.7	-	21	241	322	1.9	161.029	GKS06-3M□□□063C42	E84AV□□□7514□□0	66
0.9	3.6	-	20	249	333	1.0	166.276	GKS05-3M□□□063C42	E84AV□□□7514□□0	66
0.8	3.4	-	20	257	343	1.5	174.336	GKS06-4M□□□063C42	E84AV□□□7514□□0	74
0.8	3.4	-	19	264	353	2.9	179.201	GKS07-4M□□□063C42	E84AV□□□7514□□0	74
0.8	3.2	-	18	285	380	1.8	190.080	GKS06-3M□□□063C42	E84AV□□□7514□□0	66
0.7	3.0	-	17	298	399	1.7	202.588	GKS06-4M□□□063C42	E84AV□□□7514□□0	74
0.7	2.8	-	16	321	428	1.4	214.133	GKS06-3M□□□063C42	E84AV□□□7514□□0	66
0.6	2.7	-	15	330	442	1.2	224.524	GKS06-4M□□□063C42	E84AV□□□7514□□0	74
0.6	2.6	-	15	345	462	1.5	230.688	GKS06-3M□□□063C42	E84AV□□□7514□□0	66
0.6	2.7	-	15	328	438	2.3	222.909	GKS07-4M□□□063C42	E84AV□□□7514□□0	74
0.6	2.4	-	14	371	496	1.4	252.000	GKS06-4M□□□063C42	E84AV□□□7514□□0	74
0.6	2.3	-	13	389	520	1.2	259.880	GKS06-3M□□□063C42	E84AV□□□7514□□0	66
0.5	2.2	-	12	411	549	0.9	279.286	GKS06-4M□□□063C42	E84AV□□□7514□□0	74
0.5	2.1	-	12	437	583	1.2	291.600	GKS06-3M□□□063C42	E84AV□□□7514□□0	66
0.5	2.2	-	12	402	537	1.9	273.199	GKS07-4M□□□063C42	E84AV□□□7514□□0	74
0.5	1.9	-	11	466	623	1.1	316.800	GKS06-4M□□□063C42	E84AV□□□7514□□0	74
0.4	1.9	-	11	472	631	2.0	321.049	GKS07-4M□□□063C42	E84AV□□□7514□□0	74
0.4	1.8	-	10	492	657	0.9	328.500	GKS06-3M□□□063C42	E84AV□□□7514□□0	66
0.4	1.7	-	9.5	528	706	1.4	358.829	GKS07-4M□□□063C42	E84AV□□□7514□□0	74
0.4	1.5	-	8.5	588	786	1.6	399.353	GKS07-4M□□□063C42	E84AV□□□7514□□0	74
0.3	1.3	-	7.3	683	913	1.1	464.367	GKS07-4M□□□063C42	E84AV□□□7514□□0	74
0.3	1.2	-	6.6	760	1017	1.2	516.810	GKS07-4M□□□063C42	E84AV□□□7514□□0	74
0.3	1.1	-	6.0	829	1109	0.9	563.572	GKS07-4M□□□063C42	E84AV□□□7514□□0	74
0.2	0.9	-	5.3	937	1252	1.0	636.581	GKS07-4M□□□063C42	E84AV□□□7514□□0	74
0.2	0.7	-	4.2	1203	1608	1.8	817.551	GKS09-4M□□□063C42	E84AV□□□7514□□0	74
0.2	0.7	-	3.7	1356	1812	1.6	921.367	GKS09-4M□□□063C42	E84AV□□□7514□□0	74
0.1	0.6	-	3.4	1460	1952	1.5	992.209	GKS09-4M□□□063C42	E84AV□□□7514□□0	74
0.1	0.5	-	3.0	1645	2199	1.3	1118.204	GKS09-4M□□□063C42	E84AV□□□7514□□0	74
0.1	0.5	-	2.7	1845	2467	1.2	1254.197	GKS09-4M□□□063C42	E84AV□□□7514□□0	74
0.1	0.4	-	2.4	2080	2780	1.1	1413.461	GKS09-4M□□□063C42	E84AV□□□7514□□0	74



Selection tables

► 120 Hz: P_N = 1.10 kW

n_{22}/n_2 = 1 ... 24.0

n_1 = 145.4 ... 3490 r/min

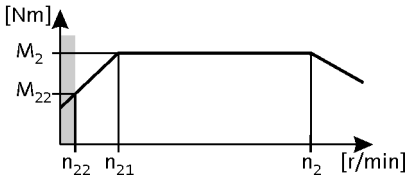

n_{22}	n_{21}		n_2	M_{22}	M_2	c	i			
[r/min]	[r/min]		[r/min]	[Nm]	[Nm]					
16	67	-	388	20	26	3.0	8.991	GKS04-3M□□□071C32	E84AV□□□1124□□0	66
15	61	-	355	22	28	2.9	9.836	GKS04-3M□□□071C32	E84AV□□□1124□□0	66
11	46	-	265	29	38	3.3	13.176	GKS05-3M□□□071C32	E84AV□□□1124□□0	66
10	42	-	244	32	41	3.0	14.333	GKS04-3M□□□071C32	E84AV□□□1124□□0	66
7.1	29	-	170	45	59	2.3	20.588	GKS04-3M□□□071C32	E84AV□□□1124□□0	66
6.5	27	-	155	49	64	2.1	22.522	GKS04-3M□□□071C32	E84AV□□□1124□□0	66
5.8	24	-	139	55	72	1.8	25.088	GKS04-3M□□□071C32	E84AV□□□1124□□0	66
5.1	21	-	122	63	82	1.7	28.727	GKS04-3M□□□071C32	E84AV□□□1124□□0	66
4.9	20	-	117	66	86	2.9	29.931	GKS05-3M□□□071C32	E84AV□□□1124□□0	66
4.5	19	-	109	70	92	1.4	32.000	GKS04-3M□□□071C32	E84AV□□□1124□□0	66
4.4	18	-	107	72	94	2.7	32.744	GKS05-3M□□□071C32	E84AV□□□1124□□0	66
4.1	17	-	99	77	101	1.4	35.191	GKS04-3M□□□071C32	E84AV□□□1124□□0	66
3.9	16	-	95	81	106	2.2	36.894	GKS05-3M□□□071C32	E84AV□□□1124□□0	66
3.7	15	-	89	86	112	1.1	39.200	GKS04-3M□□□071C32	E84AV□□□1124□□0	66
3.5	14	-	84	92	119	2.1	41.765	GKS05-3M□□□071C32	E84AV□□□1124□□0	66
3.3	14	-	79	97	127	1.3	44.240	GKS04-3M□□□071C32	E84AV□□□1124□□0	66
3.1	13	-	74	103	135	1.9	47.059	GKS05-3M□□□071C32	E84AV□□□1124□□0	66
2.9	12	-	69	112	146	1.1	50.943	GKS04-3M□□□071C32	E84AV□□□1124□□0	66
2.8	12	-	68	112	146	1.9	51.162	GKS05-3M□□□071C32	E84AV□□□1124□□0	66
2.6	11	-	61	125	163	1.0	56.976	GKS04-3M□□□071C32	E84AV□□□1124□□0	66
2.5	10	-	61	127	165	1.6	57.647	GKS05-3M□□□071C32	E84AV□□□1124□□0	66
2.2	9.2	-	54	143	186	2.9	65.207	GKS06-3M□□□071C32	E84AV□□□1124□□0	66
2.2	9.0	-	52	146	190	1.5	66.592	GKS05-3M□□□071C32	E84AV□□□1124□□0	66
2.0	8.3	-	49	158	206	2.9	72.000	GKS06-3M□□□071C32	E84AV□□□1124□□0	66
1.9	8.0	-	47	165	215	1.2	75.033	GKS05-3M□□□071C32	E84AV□□□1124□□0	66
1.8	7.4	-	43	178	232	2.3	81.111	GKS06-3M□□□071C32	E84AV□□□1124□□0	66
1.8	7.2	-	42	182	237	1.2	82.833	GKS05-3M□□□071C32	E84AV□□□1124□□0	66
1.6	6.4	-	38	205	266	2.3	93.176	GKS06-3M□□□071C32	E84AV□□□1124□□0	66
1.6	6.4	-	37	205	267	1.0	93.333	GKS05-3M□□□071C32	E84AV□□□1124□□0	66
1.4	5.8	-	34	224	292	2.0	103.721	GKS06-4M□□□071C32	E84AV□□□1124□□0	74
1.4	5.6	-	33	235	307	0.9	107.196	GKS05-3M□□□071C32	E84AV□□□1124□□0	66
1.4	5.7	-	33	230	300	1.8	104.967	GKS06-3M□□□071C32	E84AV□□□1124□□0	66
1.3	5.3	-	31	244	318	1.6	113.205	GKS06-4M□□□071C32	E84AV□□□1124□□0	74
1.3	5.3	-	31	248	323	2.1	113.082	GKS06-3M□□□071C32	E84AV□□□1124□□0	66
1.3	5.3	-	31	243	316	3.2	112.391	GKS07-4M□□□071C32	E84AV□□□1124□□0	74
1.1	4.7	-	28	274	357	1.8	127.059	GKS06-4M□□□071C32	E84AV□□□1124□□0	74
1.1	4.7	-	27	280	364	1.7	127.392	GKS06-3M□□□071C32	E84AV□□□1124□□0	66
1.0	4.3	-	25	304	396	1.3	140.816	GKS06-4M□□□071C32	E84AV□□□1124□□0	74
1.1	4.4	-	25	297	387	2.6	137.748	GKS07-4M□□□071C32	E84AV□□□1124□□0	74
1.0	4.2	-	24	314	409	1.6	142.941	GKS06-3M□□□071C32	E84AV□□□1124□□0	66
0.9	3.9	-	23	334	435	2.8	154.622	GKS07-4M□□□071C32	E84AV□□□1124□□0	74



Selection tables

► 120 Hz: P_N = 1.10 kW

n_{22}/n_2 = 1 ... 24.0

n_1 = 145.4 ... 3490 r/min

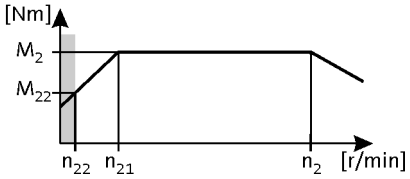

n_{22}	n_{21}		n_2	M_{22}	M_2	c	i			
[r/min]	[r/min]		[r/min]	[Nm]	[Nm]					
0.9	3.7	-	22	354	460	1.3	161.029	GKS06-3M□□□071C32	E84AV□□□1124□□0	66
0.9	3.9	-	22	336	437	1.5	155.647	GKS06-4M□□□071C32	E84AV□□□1124□□0	74
0.8	3.4	-	20	376	490	1.0	174.336	GKS06-4M□□□071C32	E84AV□□□1124□□0	74
0.8	3.4	-	20	387	504	2.0	179.201	GKS07-4M□□□071C32	E84AV□□□1124□□0	74
0.8	3.2	-	18	417	543	1.2	190.080	GKS06-3M□□□071C32	E84AV□□□1124□□0	66
0.7	3.0	-	17	437	569	1.2	202.588	GKS06-4M□□□071C32	E84AV□□□1124□□0	74
0.7	3.0	-	17	434	566	2.2	201.254	GKS07-4M□□□071C32	E84AV□□□1124□□0	74
0.7	2.8	-	16	470	612	1.0	214.133	GKS06-3M□□□071C32	E84AV□□□1124□□0	66
0.7	2.7	-	16	481	626	1.6	222.909	GKS07-4M□□□071C32	E84AV□□□1124□□0	74
0.6	2.6	-	15	506	660	1.0	230.688	GKS06-3M□□□071C32	E84AV□□□1124□□0	66
0.6	2.4	-	14	544	708	0.9	252.000	GKS06-4M□□□071C32	E84AV□□□1124□□0	74
0.6	2.4	-	14	532	693	1.8	246.659	GKS07-4M□□□071C32	E84AV□□□1124□□0	74
0.5	2.2	-	13	590	768	1.3	273.199	GKS07-4M□□□071C32	E84AV□□□1124□□0	74
0.5	1.9	-	11	693	902	1.4	321.049	GKS07-4M□□□071C32	E84AV□□□1124□□0	74
0.5	1.9	-	11	698	909	3.2	323.365	GKS09-4M□□□071C32	E84AV□□□1124□□0	74
0.4	1.7	-	9.7	774	1008	1.0	358.829	GKS07-4M□□□071C32	E84AV□□□1124□□0	74
0.4	1.7	-	9.6	786	1024	2.9	364.427	GKS09-4M□□□071C32	E84AV□□□1124□□0	74
0.4	1.5	-	8.7	862	1122	1.1	399.353	GKS07-4M□□□071C32	E84AV□□□1124□□0	74
0.4	1.5	-	8.7	868	1130	2.5	402.234	GKS09-4M□□□071C32	E84AV□□□1124□□0	74
0.3	1.3	-	7.7	978	1274	2.3	453.311	GKS09-4M□□□071C32	E84AV□□□1124□□0	74
0.3	1.2	-	6.7	1123	1463	2.0	520.538	GKS09-4M□□□071C32	E84AV□□□1124□□0	74
0.3	1.0	-	6.0	1266	1649	1.8	586.638	GKS09-4M□□□071C32	E84AV□□□1124□□0	74
0.2	1.0	-	5.5	1363	1775	1.6	631.744	GKS09-4M□□□071C32	E84AV□□□1124□□0	74
0.2	0.8	-	4.9	1536	2001	1.5	711.965	GKS09-4M□□□071C32	E84AV□□□1124□□0	74
0.2	0.7	-	4.3	1764	2298	1.3	817.551	GKS09-4M□□□071C32	E84AV□□□1124□□0	74
0.2	0.7	-	3.8	1988	2589	1.1	921.367	GKS09-4M□□□071C32	E84AV□□□1124□□0	74
0.2	0.6	-	3.5	2141	2788	1.0	992.209	GKS09-4M□□□071C32	E84AV□□□1124□□0	74
0.1	0.5	-	3.1	2413	3143	0.9	1118.204	GKS09-4M□□□071C32	E84AV□□□1124□□0	74



Selection tables

► 120 Hz: P_N = 1.50 kW

n_{22}/n_2 = 1 ... 24.0

n_1 = 143.8 ... 3450 r/min

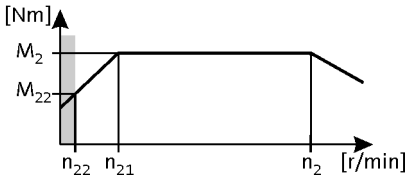

n_{22}	n_{21}		n_2	M_{22}	M_2	c	i			
[r/min]	[r/min]		[r/min]	[Nm]	[Nm]					
16	67	-	384	27	36	2.2	8.991	GKS04-3M□□□071C42	E84AV□□□1524□□0	66
15	61	-	351	29	39	2.1	9.836	GKS04-3M□□□071C42	E84AV□□□1524□□0	66
11	46	-	262	39	52	2.4	13.176	GKS05-3M□□□071C42	E84AV□□□1524□□0	66
10	42	-	241	43	57	2.2	14.333	GKS04-3M□□□071C42	E84AV□□□1524□□0	66
7.0	29	-	168	62	81	1.7	20.588	GKS04-3M□□□071C42	E84AV□□□1524□□0	66
6.4	27	-	153	67	89	1.6	22.522	GKS04-3M□□□071C42	E84AV□□□1524□□0	66
5.7	24	-	138	75	99	1.3	25.088	GKS04-3M□□□071C42	E84AV□□□1524□□0	66
5.0	21	-	120	86	113	1.2	28.727	GKS04-3M□□□071C42	E84AV□□□1524□□0	66
4.8	20	-	115	90	118	2.1	29.931	GKS05-3M□□□071C42	E84AV□□□1524□□0	66
4.5	19	-	108	96	126	1.0	32.000	GKS04-3M□□□071C42	E84AV□□□1524□□0	66
4.4	18	-	105	98	129	1.9	32.744	GKS05-3M□□□071C42	E84AV□□□1524□□0	66
4.1	17	-	98	105	139	1.0	35.191	GKS04-3M□□□071C42	E84AV□□□1524□□0	66
4.0	17	-	95	109	143	3.1	36.303	GKS06-3M□□□071C42	E84AV□□□1524□□0	66
3.9	16	-	94	110	146	1.6	36.894	GKS05-3M□□□071C42	E84AV□□□1524□□0	66
3.4	14	-	83	125	165	1.5	41.765	GKS05-3M□□□071C42	E84AV□□□1524□□0	66
3.3	14	-	78	132	175	0.9	44.240	GKS04-3M□□□071C42	E84AV□□□1524□□0	66
3.1	13	-	73	141	186	1.4	47.059	GKS05-3M□□□071C42	E84AV□□□1524□□0	66
2.8	12	-	67	153	202	1.4	51.162	GKS05-3M□□□071C42	E84AV□□□1524□□0	66
2.5	10	-	60	173	227	1.2	57.647	GKS05-3M□□□071C42	E84AV□□□1524□□0	66
2.5	10	-	60	173	228	2.6	57.882	GKS06-3M□□□071C42	E84AV□□□1524□□0	66
2.2	9.2	-	53	195	257	2.1	65.207	GKS06-3M□□□071C42	E84AV□□□1524□□0	66
2.2	9.0	-	52	199	263	1.1	66.592	GKS05-3M□□□071C42	E84AV□□□1524□□0	66
2.0	8.3	-	48	216	284	2.1	72.000	GKS06-3M□□□071C42	E84AV□□□1524□□0	66
1.9	8.0	-	46	225	296	0.9	75.033	GKS05-3M□□□071C42	E84AV□□□1524□□0	66
1.8	7.4	-	43	243	320	1.7	81.111	GKS06-3M□□□071C42	E84AV□□□1524□□0	66
1.5	6.4	-	37	279	368	1.6	93.176	GKS06-3M□□□071C42	E84AV□□□1524□□0	66
1.4	5.8	-	34	303	399	2.8	103.039	GKS07-4M□□□071C42	E84AV□□□1524□□0	74
1.4	5.7	-	33	314	414	1.3	104.967	GKS06-3M□□□071C42	E84AV□□□1524□□0	66
1.4	5.8	-	33	305	402	1.5	103.721	GKS06-4M□□□071C42	E84AV□□□1524□□0	74
1.3	5.3	-	31	333	439	1.2	113.205	GKS06-4M□□□071C42	E84AV□□□1524□□0	74
1.3	5.3	-	31	339	446	1.5	113.082	GKS06-3M□□□071C42	E84AV□□□1524□□0	66
1.3	5.3	-	31	331	436	2.3	112.391	GKS07-4M□□□071C42	E84AV□□□1524□□0	74
1.1	4.7	-	27	381	502	1.2	127.392	GKS06-3M□□□071C42	E84AV□□□1524□□0	66
1.1	4.7	-	27	374	493	1.3	127.059	GKS06-4M□□□071C42	E84AV□□□1524□□0	74
1.1	4.8	-	27	371	489	2.5	126.222	GKS07-4M□□□071C42	E84AV□□□1524□□0	74
1.0	4.3	-	25	414	546	0.9	140.816	GKS06-4M□□□071C42	E84AV□□□1524□□0	74
1.0	4.4	-	25	405	534	1.9	137.748	GKS07-4M□□□071C42	E84AV□□□1524□□0	74
1.0	4.2	-	24	428	564	1.2	142.941	GKS06-3M□□□071C42	E84AV□□□1524□□0	66
0.9	3.9	-	22	458	603	1.1	155.647	GKS06-4M□□□071C42	E84AV□□□1524□□0	74
0.9	3.9	-	22	455	599	2.1	154.622	GKS07-4M□□□071C42	E84AV□□□1524□□0	74
0.9	3.7	-	21	482	635	1.0	161.029	GKS06-3M□□□071C42	E84AV□□□1524□□0	66



Selection tables

► 120 Hz: P_N = 1.50 kW

n_{22}/n_2 = 1 ... 24.0

n_1 = 143.8 ... 3450 r/min

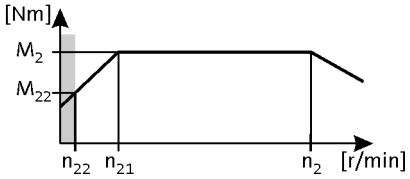

n_{22} [r/min]	n_{21} [r/min]		n_2 [r/min]	M_{22} [Nm]	M_2 [Nm]	c	i			
0.8	3.4	-	19	527	695	1.4	179.201	GKS07-4M□□□071C42	E84AV□□□1524□□0	74
0.7	3.0	-	17	592	780	1.6	201.254	GKS07-4M□□□071C42	E84AV□□□1524□□0	74
0.6	2.7	-	16	656	864	1.2	222.909	GKS07-4M□□□071C42	E84AV□□□1524□□0	74
0.6	2.4	-	14	726	956	1.3	246.659	GKS07-4M□□□071C42	E84AV□□□1524□□0	74
0.5	2.2	-	13	804	1059	0.9	273.199	GKS07-4M□□□071C42	E84AV□□□1524□□0	74
0.5	1.9	-	11	945	1245	1.0	321.049	GKS07-4M□□□071C42	E84AV□□□1524□□0	74
0.4	1.9	-	11	952	1254	2.3	323.365	GKS09-4M□□□071C42	E84AV□□□1524□□0	74
0.4	1.7	-	9.5	1072	1413	2.1	364.427	GKS09-4M□□□071C42	E84AV□□□1524□□0	74
0.4	1.5	-	8.6	1184	1559	1.9	402.234	GKS09-4M□□□071C42	E84AV□□□1524□□0	74
0.3	1.3	-	7.6	1334	1757	1.7	453.311	GKS09-4M□□□071C42	E84AV□□□1524□□0	74
0.3	1.2	-	6.6	1532	2018	1.4	520.538	GKS09-4M□□□071C42	E84AV□□□1524□□0	74
0.3	1.0	-	5.9	1726	2274	1.3	586.638	GKS09-4M□□□071C42	E84AV□□□1524□□0	74
0.2	1.0	-	5.5	1859	2449	1.2	631.744	GKS09-4M□□□071C42	E84AV□□□1524□□0	74
0.2	0.8	-	4.9	2095	2760	1.1	711.965	GKS09-4M□□□071C42	E84AV□□□1524□□0	74
0.2	0.7	-	4.2	2406	3169	0.9	817.551	GKS09-4M□□□071C42	E84AV□□□1524□□0	74



Selection tables

► 120 Hz: P_N = 2.20 kW

n_{22}/n_2 = 1 ... 24.0

n_1 = 145.8 ... 3500 r/min

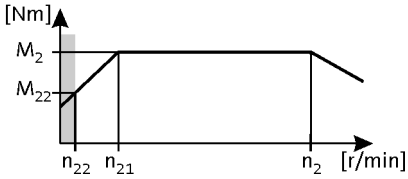

n_{22}	n_{21}		n_2	M_{22}	M_2	c	i			
[r/min]	[r/min]		[r/min]	[Nm]	[Nm]					
16	67	-	389	38	51	1.5	8.991	GKS04-3M□□□080C32	E84AV□□□2224□□0	66
15	61	-	356	42	56	1.4	9.836	GKS04-3M□□□080C32	E84AV□□□2224□□0	66
13	53	-	308	49	65	3.8	11.382	GKS06-3M□□□080C32	E84AV□□□2224□□0	66
11	46	-	266	56	75	1.7	13.176	GKS05-3M□□□080C32	E84AV□□□2224□□0	66
10	42	-	244	61	82	1.5	14.333	GKS04-3M□□□080C32	E84AV□□□2224□□0	66
8.2	34	-	197	76	102	3.8	17.809	GKS06-3M□□□080C32	E84AV□□□2224□□0	66
7.1	29	-	170	88	117	1.2	20.588	GKS04-3M□□□080C32	E84AV□□□2224□□0	66
6.5	27	-	155	96	128	1.1	22.522	GKS04-3M□□□080C32	E84AV□□□2224□□0	66
5.6	23	-	135	111	148	3.5	26.017	GKS06-3M□□□080C32	E84AV□□□2224□□0	66
5.1	21	-	123	122	162	3.2	28.461	GKS06-3M□□□080C32	E84AV□□□2224□□0	66
4.9	20	-	117	128	171	1.5	29.931	GKS05-3M□□□080C32	E84AV□□□2224□□0	66
4.6	19	-	109	137	183	2.5	32.063	GKS06-3M□□□080C32	E84AV□□□2224□□0	66
4.5	18	-	107	140	187	1.3	32.744	GKS05-3M□□□080C32	E84AV□□□2224□□0	66
4.0	17	-	96	155	207	2.5	36.303	GKS06-3M□□□080C32	E84AV□□□2224□□0	66
4.0	16	-	95	158	210	1.1	36.894	GKS05-3M□□□080C32	E84AV□□□2224□□0	66
3.5	14	-	84	179	238	1.0	41.765	GKS05-3M□□□080C32	E84AV□□□2224□□0	66
3.3	14	-	79	190	254	2.3	44.471	GKS06-3M□□□080C32	E84AV□□□2224□□0	66
3.1	13	-	74	201	268	1.0	47.059	GKS05-3M□□□080C32	E84AV□□□2224□□0	66
2.9	12	-	68	219	292	1.0	51.162	GKS05-3M□□□080C32	E84AV□□□2224□□0	66
2.8	11	-	66	227	303	2.0	53.074	GKS06-3M□□□080C32	E84AV□□□2224□□0	66
2.5	10	-	61	247	330	1.8	57.882	GKS06-3M□□□080C32	E84AV□□□2224□□0	66
2.2	9.2	-	54	279	372	1.4	65.207	GKS06-3M□□□080C32	E84AV□□□2224□□0	66
2.3	9.3	-	54	277	369	2.8	64.790	GKS07-3M□□□080C32	E84AV□□□2224□□0	66
2.1	8.5	-	50	301	402	2.8	70.474	GKS07-3M□□□080C32	E84AV□□□2224□□0	66
2.0	8.3	-	49	308	411	1.5	72.000	GKS06-3M□□□080C32	E84AV□□□2224□□0	66
1.8	7.6	-	44	339	453	2.3	79.407	GKS07-3M□□□080C32	E84AV□□□2224□□0	66
1.8	7.4	-	43	347	463	1.2	81.111	GKS06-3M□□□080C32	E84AV□□□2224□□0	66
1.6	6.4	-	38	398	531	1.1	93.176	GKS06-3M□□□080C32	E84AV□□□2224□□0	66
1.6	6.5	-	38	396	528	2.2	92.563	GKS07-3M□□□080C32	E84AV□□□2224□□0	66
1.4	5.8	-	34	436	581	1.0	103.721	GKS06-4M□□□080C32	E84AV□□□2224□□0	74
1.4	5.8	-	34	446	595	1.8	104.296	GKS07-3M□□□080C32	E84AV□□□2224□□0	66
1.4	5.8	-	34	433	578	1.9	103.039	GKS07-4M□□□080C32	E84AV□□□2224□□0	74
1.4	5.7	-	33	449	599	0.9	104.967	GKS06-3M□□□080C32	E84AV□□□2224□□0	66
1.3	5.3	-	31	483	645	1.0	113.082	GKS06-3M□□□080C32	E84AV□□□2224□□0	66
1.3	5.3	-	31	472	630	1.6	112.391	GKS07-4M□□□080C32	E84AV□□□2224□□0	74
1.3	5.3	-	31	480	641	2.0	112.338	GKS07-3M□□□080C32	E84AV□□□2224□□0	66
1.2	4.7	-	28	534	712	0.9	127.059	GKS06-4M□□□080C32	E84AV□□□2224□□0	74
1.2	4.7	-	28	541	722	1.6	126.578	GKS07-3M□□□080C32	E84AV□□□2224□□0	66
1.2	4.8	-	28	530	708	1.7	126.222	GKS07-4M□□□080C32	E84AV□□□2224□□0	74
1.1	4.4	-	25	579	772	1.3	137.748	GKS07-4M□□□080C32	E84AV□□□2224□□0	74
1.0	4.3	-	25	601	801	1.6	140.548	GKS07-3M□□□080C32	E84AV□□□2224□□0	66



Selection tables

► 120 Hz: P_N = 2.20 kW

n_{22}/n_2 = 1 ... 24.0

n_1 = 145.8 ... 3500 r/min

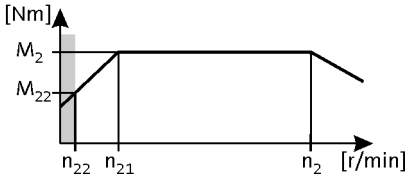

n_{22}	n_{21}		n_2	M_{22}	M_2	c	i			
[r/min]	[r/min]		[r/min]	[Nm]	[Nm]					
0.9	3.9	-	23	650	867	1.4	154.622	GKS07-4M□□□080C32	E84AV□□□2224□□0	74
0.9	3.8	-	22	677	903	1.3	158.364	GKS07-3M□□□080C32	E84AV□□□2224□□0	66
0.9	3.5	-	21	715	954	3.0	170.188	GKS09-4M□□□080C32	E84AV□□□2224□□0	74
0.8	3.4	-	20	753	1004	1.0	179.201	GKS07-4M□□□080C32	E84AV□□□2224□□0	74
0.8	3.3	-	19	789	1053	1.2	184.600	GKS07-3M□□□080C32	E84AV□□□2224□□0	66
0.7	2.9	-	17	889	1186	1.0	208.000	GKS07-3M□□□080C32	E84AV□□□2224□□0	66
0.7	3.0	-	17	846	1128	1.1	201.254	GKS07-4M□□□080C32	E84AV□□□2224□□0	74
0.7	2.9	-	17	860	1147	2.5	204.596	GKS09-4M□□□080C32	E84AV□□□2224□□0	74
0.7	2.7	-	16	958	1277	1.0	224.037	GKS07-3M□□□080C32	E84AV□□□2224□□0	66
0.6	2.6	-	15	969	1292	2.2	230.577	GKS09-4M□□□080C32	E84AV□□□2224□□0	74
0.6	2.4	-	14	1036	1383	0.9	246.659	GKS07-4M□□□080C32	E84AV□□□2224□□0	74
0.6	2.4	-	14	1044	1393	2.1	248.439	GKS09-4M□□□080C32	E84AV□□□2224□□0	74
0.5	2.1	-	13	1176	1569	1.9	279.986	GKS09-4M□□□080C32	E84AV□□□2224□□0	74
0.5	1.9	-	11	1359	1812	1.6	323.365	GKS09-4M□□□080C32	E84AV□□□2224□□0	74
0.5	1.9	-	11	1357	1810	3.1	322.931	GKS11-4M□□□080C32	E84AV□□□2224□□0	74
0.4	1.7	-	9.6	1531	2043	1.4	364.427	GKS09-4M□□□080C32	E84AV□□□2224□□0	74
0.4	1.7	-	9.6	1529	2040	2.8	363.866	GKS11-4M□□□080C32	E84AV□□□2224□□0	74
0.4	1.5	-	8.8	1663	2218	2.6	395.787	GKS11-4M□□□080C32	E84AV□□□2224□□0	74
0.4	1.5	-	8.7	1690	2255	1.3	402.234	GKS09-4M□□□080C32	E84AV□□□2224□□0	74
0.3	1.4	-	7.9	1874	2500	2.3	445.958	GKS11-4M□□□080C32	E84AV□□□2224□□0	74
0.3	1.3	-	7.7	1905	2541	1.1	453.311	GKS09-4M□□□080C32	E84AV□□□2224□□0	74
0.3	1.2	-	6.8	2152	2871	2.0	512.196	GKS11-4M□□□080C32	E84AV□□□2224□□0	74
0.3	1.2	-	6.7	2187	2918	1.0	520.538	GKS09-4M□□□080C32	E84AV□□□2224□□0	74
0.3	1.0	-	6.1	2425	3235	1.8	577.122	GKS11-4M□□□080C32	E84AV□□□2224□□0	74
0.2	1.0	-	5.6	2612	3484	1.6	621.619	GKS11-4M□□□080C32	E84AV□□□2224□□0	74
0.2	0.9	-	5.0	2943	3926	1.5	700.416	GKS11-4M□□□080C32	E84AV□□□2224□□0	74
0.2	0.7	-	4.3	3431	4576	1.2	816.455	GKS11-4M□□□080C32	E84AV□□□2224□□0	74
0.2	0.7	-	3.8	3865	5156	1.1	919.949	GKS11-4M□□□080C32	E84AV□□□2224□□0	74
0.2	0.6	-	3.5	4163	5554	1.0	990.879	GKS11-4M□□□080C32	E84AV□□□2224□□0	74
0.1	0.5	-	3.1	4691	6258	0.9	1116.484	GKS11-4M□□□080C32	E84AV□□□2224□□0	74



Selection tables

► 120 Hz: P_N = 3.00 kW

n_{22}/n_2 = 1 ... 24.0

n_1 = 145.0 ... 3480 r/min

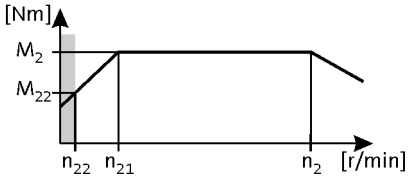

n_{22}	n_{21}		n_2	M_{22}	M_2	c	i			
[r/min]	[r/min]		[r/min]	[Nm]	[Nm]					
16	100	-	387	53	70	1.1	8.991	GKS04-3M□□□080C42	E84AV□□□3024□□0	66
15	92	-	354	58	77	1.0	9.836	GKS04-3M□□□080C42	E84AV□□□3024□□0	66
13	79	-	306	67	89	2.8	11.382	GKS06-3M□□□080C42	E84AV□□□3024□□0	66
11	68	-	264	77	103	1.2	13.176	GKS05-3M□□□080C42	E84AV□□□3024□□0	66
10	63	-	243	84	112	1.1	14.333	GKS04-3M□□□080C42	E84AV□□□3024□□0	66
8.1	51	-	195	105	139	2.8	17.809	GKS06-3M□□□080C42	E84AV□□□3024□□0	66
5.6	35	-	134	153	204	2.5	26.017	GKS06-3M□□□080C42	E84AV□□□3024□□0	66
5.1	32	-	122	167	223	2.3	28.461	GKS06-3M□□□080C42	E84AV□□□3024□□0	66
4.8	30	-	116	176	234	1.1	29.931	GKS05-3M□□□080C42	E84AV□□□3024□□0	66
4.5	28	-	109	188	251	1.8	32.063	GKS06-3M□□□080C42	E84AV□□□3024□□0	66
4.4	28	-	106	192	256	1.0	32.744	GKS05-3M□□□080C42	E84AV□□□3024□□0	66
4.0	25	-	97	212	282	3.1	36.063	GKS07-3M□□□080C42	E84AV□□□3024□□0	66
4.0	25	-	96	213	284	1.8	36.303	GKS06-3M□□□080C42	E84AV□□□3024□□0	66
3.3	20	-	78	261	348	1.7	44.471	GKS06-3M□□□080C42	E84AV□□□3024□□0	66
2.7	17	-	66	311	415	1.4	53.074	GKS06-3M□□□080C42	E84AV□□□3024□□0	66
2.5	16	-	61	337	450	2.5	57.501	GKS07-3M□□□080C42	E84AV□□□3024□□0	66
2.5	16	-	60	340	453	1.3	57.882	GKS06-3M□□□080C42	E84AV□□□3024□□0	66
2.2	14	-	54	380	507	2.0	64.790	GKS07-3M□□□080C42	E84AV□□□3024□□0	66
2.2	14	-	53	382	510	1.1	65.207	GKS06-3M□□□080C42	E84AV□□□3024□□0	66
2.1	13	-	49	413	551	2.1	70.474	GKS07-3M□□□080C42	E84AV□□□3024□□0	66
2.0	13	-	48	422	563	1.1	72.000	GKS06-3M□□□080C42	E84AV□□□3024□□0	66
1.8	11	-	44	466	621	1.7	79.407	GKS07-3M□□□080C42	E84AV□□□3024□□0	66
1.6	9.7	-	38	543	724	1.6	92.563	GKS07-3M□□□080C42	E84AV□□□3024□□0	66
1.4	8.7	-	34	594	792	1.4	103.039	GKS07-4M□□□080C42	E84AV□□□3024□□0	74
1.4	8.6	-	33	612	816	1.3	104.296	GKS07-3M□□□080C42	E84AV□□□3024□□0	66
1.3	8.0	-	31	648	864	1.2	112.391	GKS07-4M□□□080C42	E84AV□□□3024□□0	74
1.3	8.0	-	31	659	879	1.4	112.338	GKS07-3M□□□080C42	E84AV□□□3024□□0	66
1.2	7.1	-	28	742	990	1.2	126.578	GKS07-3M□□□080C42	E84AV□□□3024□□0	66
1.2	7.1	-	28	728	970	1.3	126.222	GKS07-4M□□□080C42	E84AV□□□3024□□0	74
1.2	7.3	-	28	711	948	3.0	123.275	GKS09-4M□□□080C42	E84AV□□□3024□□0	74
1.1	6.5	-	25	794	1059	0.9	137.748	GKS07-4M□□□080C42	E84AV□□□3024□□0	74
1.0	6.4	-	25	824	1099	1.2	140.548	GKS07-3M□□□080C42	E84AV□□□3024□□0	66
1.0	6.5	-	25	801	1068	2.7	138.929	GKS09-4M□□□080C42	E84AV□□□3024□□0	74
0.9	5.8	-	23	891	1189	1.0	154.622	GKS07-4M□□□080C42	E84AV□□□3024□□0	74
1.0	6.0	-	23	871	1161	2.5	151.012	GKS09-4M□□□080C42	E84AV□□□3024□□0	74
0.9	5.7	-	22	929	1238	0.9	158.364	GKS07-3M□□□080C42	E84AV□□□3024□□0	66
0.9	5.3	-	20	981	1308	2.2	170.188	GKS09-4M□□□080C42	E84AV□□□3024□□0	74
0.7	4.4	-	17	1180	1573	1.8	204.596	GKS09-4M□□□080C42	E84AV□□□3024□□0	74
0.6	3.9	-	15	1329	1773	1.6	230.577	GKS09-4M□□□080C42	E84AV□□□3024□□0	74
0.6	3.6	-	14	1432	1910	1.5	248.439	GKS09-4M□□□080C42	E84AV□□□3024□□0	74
0.5	3.2	-	12	1614	2152	1.4	279.986	GKS09-4M□□□080C42	E84AV□□□3024□□0	74



Selection tables

► 120 Hz: P_N = 3.00 kW

n_{22}/n_2 = 1 ... 24.0

n_1 = 145.0 ... 3480 r/min

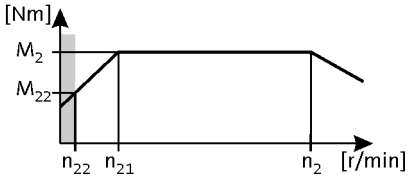

n_{22} [r/min]	n_{21} [r/min]		n_2 [r/min]	M_{22} [Nm]	M_2 [Nm]	c	i			
0.5	2.8	-	11	1864	2486	1.2	323.365	GKS09-4M□□□080C42	E84AV□□□3024□□0	74
0.5	2.8	-	11	1862	2482	2.3	322.931	GKS11-4M□□□080C42	E84AV□□□3024□□0	74
0.4	2.5	-	9.6	2101	2801	1.0	364.427	GKS09-4M□□□080C42	E84AV□□□3024□□0	74
0.4	2.5	-	9.6	2098	2797	2.1	363.866	GKS11-4M□□□080C42	E84AV□□□3024□□0	74
0.4	2.3	-	8.8	2282	3042	1.9	395.787	GKS11-4M□□□080C42	E84AV□□□3024□□0	74
0.4	2.2	-	8.7	2319	3092	0.9	402.234	GKS09-4M□□□080C42	E84AV□□□3024□□0	74
0.3	2.0	-	7.8	2571	3428	1.7	445.958	GKS11-4M□□□080C42	E84AV□□□3024□□0	74
0.3	1.8	-	6.8	2953	3937	1.4	512.196	GKS11-4M□□□080C42	E84AV□□□3024□□0	74
0.3	1.6	-	6.0	3327	4436	1.3	577.122	GKS11-4M□□□080C42	E84AV□□□3024□□0	74
0.2	1.5	-	5.6	3584	4778	1.2	621.619	GKS11-4M□□□080C42	E84AV□□□3024□□0	74
0.2	1.3	-	5.0	4038	5384	1.1	700.416	GKS11-4M□□□080C42	E84AV□□□3024□□0	74
0.2	1.1	-	4.3	4707	6276	0.9	816.455	GKS11-4M□□□080C42	E84AV□□□3024□□0	74



Selection tables

► 120 Hz: P_N = 4.00 kW

n_{22}/n_2 = 1 ... 24.0

n_1 = 145.0 ... 3480 r/min

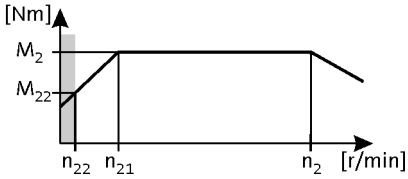

n_{22}	n_{21}		n_2	M_{22}	M_2	c	i			
[r/min]	[r/min]		[r/min]	[Nm]	[Nm]					
13	53	-	306	83	119	2.1	11.382	GKS06-3M□□□090C32	E84AV□□□4024□□0	66
11	46	-	264	96	137	0.9	13.176	GKS05-3M□□□090C32	E84AV□□□4024□□0	66
8.1	34	-	195	130	186	2.1	17.809	GKS06-3M□□□090C32	E84AV□□□4024□□0	66
5.6	23	-	134	190	271	1.9	26.017	GKS06-3M□□□090C32	E84AV□□□4024□□0	66
5.1	21	-	122	208	297	1.7	28.461	GKS06-3M□□□090C32	E84AV□□□4024□□0	66
4.5	19	-	109	234	334	1.4	32.063	GKS06-3M□□□090C32	E84AV□□□4024□□0	66
4.0	17	-	97	263	376	2.6	36.063	GKS07-3M□□□090C32	E84AV□□□4024□□0	66
4.0	17	-	96	265	379	1.4	36.303	GKS06-3M□□□090C32	E84AV□□□4024□□0	66
3.3	14	-	78	325	464	1.3	44.471	GKS06-3M□□□090C32	E84AV□□□4024□□0	66
2.7	11	-	66	387	553	1.1	53.074	GKS06-3M□□□090C32	E84AV□□□4024□□0	66
2.5	10	-	61	420	600	1.9	57.501	GKS07-3M□□□090C32	E84AV□□□4024□□0	66
2.5	10	-	60	423	604	1.0	57.882	GKS06-3M□□□090C32	E84AV□□□4024□□0	66
2.2	9.3	-	54	473	676	1.5	64.790	GKS07-3M□□□090C32	E84AV□□□4024□□0	66
2.1	8.5	-	49	514	735	1.5	70.474	GKS07-3M□□□090C32	E84AV□□□4024□□0	66
1.8	7.6	-	44	580	828	1.2	79.407	GKS07-3M□□□090C32	E84AV□□□4024□□0	66
1.6	6.5	-	38	676	965	1.2	92.563	GKS07-3M□□□090C32	E84AV□□□4024□□0	66
1.6	6.5	-	38	671	958	2.3	91.860	GKS09-3M□□□090C32	E84AV□□□4024□□0	66
1.4	6.0	-	35	721	1031	2.5	100.551	GKS09-4M□□□090C32	E84AV□□□4024□□0	74
1.4	5.8	-	34	739	1056	1.0	103.039	GKS07-4M□□□090C32	E84AV□□□4024□□0	74
1.4	5.8	-	34	756	1079	2.3	103.524	GKS09-3M□□□090C32	E84AV□□□4024□□0	66
1.4	5.8	-	33	761	1088	1.0	104.296	GKS07-3M□□□090C32	E84AV□□□4024□□0	66
1.3	5.3	-	31	820	1171	1.1	112.338	GKS07-3M□□□090C32	E84AV□□□4024□□0	66
1.3	5.4	-	31	814	1162	2.2	111.484	GKS09-3M□□□090C32	E84AV□□□4024□□0	66
1.3	5.3	-	31	813	1162	2.5	113.320	GKS09-4M□□□090C32	E84AV□□□4024□□0	74
1.2	4.8	-	28	906	1294	1.0	126.222	GKS07-4M□□□090C32	E84AV□□□4024□□0	74
1.2	4.8	-	28	917	1310	2.2	125.641	GKS09-3M□□□090C32	E84AV□□□4024□□0	66
1.2	4.9	-	28	884	1264	2.3	123.275	GKS09-4M□□□090C32	E84AV□□□4024□□0	74
1.0	4.3	-	25	1029	1469	1.7	140.921	GKS09-3M□□□090C32	E84AV□□□4024□□0	66
1.0	4.3	-	25	997	1424	2.0	138.929	GKS09-4M□□□090C32	E84AV□□□4024□□0	74
1.0	4.0	-	23	1083	1548	1.9	151.012	GKS09-4M□□□090C32	E84AV□□□4024□□0	74
0.9	3.8	-	22	1159	1656	1.7	158.816	GKS09-3M□□□090C32	E84AV□□□4024□□0	66
0.9	3.5	-	20	1221	1744	1.6	170.188	GKS09-4M□□□090C32	E84AV□□□4024□□0	74
0.8	3.3	-	19	1328	1898	1.5	182.000	GKS09-3M□□□090C32	E84AV□□□4024□□0	66
0.7	2.9	-	17	1468	2097	1.4	204.596	GKS09-4M□□□090C32	E84AV□□□4024□□0	74
0.7	2.9	-	17	1497	2139	1.4	205.111	GKS09-3M□□□090C32	E84AV□□□4024□□0	66
0.7	2.7	-	16	1612	2303	1.3	220.882	GKS09-3M□□□090C32	E84AV□□□4024□□0	66
0.6	2.6	-	15	1654	2363	1.2	230.577	GKS09-4M□□□090C32	E84AV□□□4024□□0	74
0.6	2.4	-	14	1782	2546	1.1	248.439	GKS09-4M□□□090C32	E84AV□□□4024□□0	74
0.6	2.4	-	14	1817	2596	1.1	248.930	GKS09-3M□□□090C32	E84AV□□□4024□□0	66
0.5	2.2	-	13	2038	2911	1.0	279.205	GKS09-3M□□□090C32	E84AV□□□4024□□0	66
0.5	2.1	-	12	2009	2870	1.0	279.986	GKS09-4M□□□090C32	E84AV□□□4024□□0	74



Selection tables

► 120 Hz: P_N = 4.00 kW

n_{22}/n_2 = 1 ... 24.0

n_1 = 145.0 ... 3480 r/min

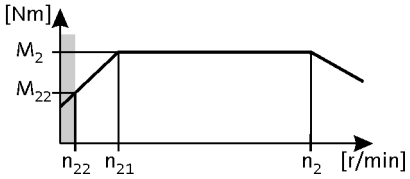

n_{22} [r/min]	n_{21} [r/min]		n_2 [r/min]	M_{22} [Nm]	M_2 [Nm]	c	i			
0.5	1.9	-	11	2317	3310	1.7	322.931	GKS11-4M□□□090C32	E84AV□□□4024□□0	74
0.4	1.7	-	9.6	2611	3729	1.5	363.866	GKS11-4M□□□090C32	E84AV□□□4024□□0	74
0.4	1.5	-	8.8	2840	4057	1.4	395.787	GKS11-4M□□□090C32	E84AV□□□4024□□0	74
0.3	1.4	-	7.8	3200	4571	1.3	445.958	GKS11-4M□□□090C32	E84AV□□□4024□□0	74
0.3	1.2	-	6.8	3675	5250	1.1	512.196	GKS11-4M□□□090C32	E84AV□□□4024□□0	74
0.3	1.0	-	6.0	4141	5915	1.0	577.122	GKS11-4M□□□090C32	E84AV□□□4024□□0	74
0.2	0.7	-	4.3	5782	8260	1.3	805.901	GKS14-4M□□□090C32	E84AV□□□4024□□0	74
0.2	0.7	-	3.8	6515	9307	1.2	908.058	GKS14-4M□□□090C32	E84AV□□□4024□□0	74
0.2	0.6	-	3.6	7017	10025	1.1	978.071	GKS14-4M□□□090C32	E84AV□□□4024□□0	74
0.1	0.5	-	3.2	7907	11295	1.0	1102.052	GKS14-4M□□□090C32	E84AV□□□4024□□0	74



Selection tables

► 120 Hz: P_N = 5.50 kW

n_{22}/n_2 = 1 ... 24.0

n_1 = 146.9 ... 3525 r/min

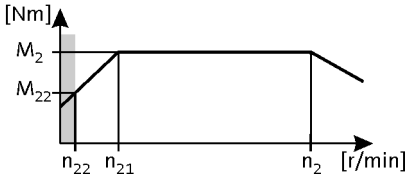

n_{22} [r/min]	n_{21} [r/min]		n_2 [r/min]	M_{22} [Nm]	M_2 [Nm]	c	i			
13	53	-	310	113	161	1.5	11.382	GKS06-3M□□□100C12	E84AV□□□5524□□0	66
13	53	-	310	113	161	2.9	11.378	GKS07-3M□□□100C12	E84AV□□□5524□□0	66
8.5	35	-	204	171	244	3.1	17.270	GKS07-3M□□□100C12	E84AV□□□5524□□0	66
8.3	34	-	198	176	252	1.5	17.809	GKS06-3M□□□100C12	E84AV□□□5524□□0	66
5.8	24	-	140	250	357	2.5	25.244	GKS07-3M□□□100C12	E84AV□□□5524□□0	66
5.7	23	-	136	258	368	1.4	26.017	GKS06-3M□□□100C12	E84AV□□□5524□□0	66
5.2	21	-	125	280	400	2.3	28.274	GKS07-3M□□□100C12	E84AV□□□5524□□0	66
5.2	21	-	124	282	403	1.3	28.461	GKS06-3M□□□100C12	E84AV□□□5524□□0	66
4.6	19	-	111	316	451	2.0	31.858	GKS07-3M□□□100C12	E84AV□□□5524□□0	66
4.6	19	-	110	318	454	1.0	32.063	GKS06-3M□□□100C12	E84AV□□□5524□□0	66
4.1	17	-	98	357	510	1.9	36.063	GKS07-3M□□□100C12	E84AV□□□5524□□0	66
4.1	17	-	97	360	514	1.0	36.303	GKS06-3M□□□100C12	E84AV□□□5524□□0	66
3.7	15	-	89	393	561	4.0	39.662	GKS09-3M□□□100C12	E84AV□□□5524□□0	66
3.3	14	-	80	438	625	1.8	44.178	GKS07-3M□□□100C12	E84AV□□□5524□□0	66
3.3	14	-	79	441	629	0.9	44.471	GKS06-3M□□□100C12	E84AV□□□5524□□0	66
2.9	12	-	70	499	713	1.6	50.345	GKS07-3M□□□100C12	E84AV□□□5524□□0	66
2.6	10	-	61	570	814	1.4	57.501	GKS07-3M□□□100C12	E84AV□□□5524□□0	66
2.5	10	-	60	579	827	3.1	58.456	GKS09-3M□□□100C12	E84AV□□□5524□□0	66
2.3	9.3	-	54	642	917	1.1	64.790	GKS07-3M□□□100C12	E84AV□□□5524□□0	66
2.2	9.1	-	54	653	932	2.8	65.879	GKS09-3M□□□100C12	E84AV□□□5524□□0	66
2.1	8.5	-	50	698	998	1.1	70.474	GKS07-3M□□□100C12	E84AV□□□5524□□0	66
2.1	8.5	-	50	703	1005	2.6	70.982	GKS09-3M□□□100C12	E84AV□□□5524□□0	66
1.9	7.6	-	44	787	1124	0.9	79.407	GKS07-3M□□□100C12	E84AV□□□5524□□0	66
1.8	7.5	-	44	793	1132	2.3	79.996	GKS09-3M□□□100C12	E84AV□□□5524□□0	66
1.6	6.5	-	38	910	1300	2.0	91.860	GKS09-3M□□□100C12	E84AV□□□5524□□0	66
1.6	6.5	-	38	909	1298	2.9	91.737	GKS11-3M□□□100C12	E84AV□□□5524□□0	66
1.5	6.0	-	35	979	1399	1.9	100.551	GKS09-4M□□□100C12	E84AV□□□5524□□0	74
1.4	5.8	-	34	1026	1465	1.8	103.524	GKS09-3M□□□100C12	E84AV□□□5524□□0	66
1.4	5.8	-	34	1024	1463	2.9	103.365	GKS11-3M□□□100C12	E84AV□□□5524□□0	66
1.3	5.4	-	32	1105	1578	1.8	111.484	GKS09-3M□□□100C12	E84AV□□□5524□□0	66
1.3	5.4	-	32	1103	1576	2.7	111.335	GKS11-3M□□□100C12	E84AV□□□5524□□0	66
1.3	5.3	-	31	1104	1577	1.8	113.320	GKS09-4M□□□100C12	E84AV□□□5524□□0	74
1.2	4.9	-	29	1201	1715	1.7	123.275	GKS09-4M□□□100C12	E84AV□□□5524□□0	74
1.2	4.8	-	28	1245	1778	1.6	125.641	GKS09-3M□□□100C12	E84AV□□□5524□□0	66
1.2	4.8	-	28	1243	1776	2.7	125.448	GKS11-3M□□□100C12	E84AV□□□5524□□0	66
1.2	4.8	-	28	1218	1741	3.2	125.095	GKS11-4M□□□100C12	E84AV□□□5524□□0	74
1.0	4.3	-	25	1396	1995	1.4	140.921	GKS09-3M□□□100C12	E84AV□□□5524□□0	66
1.1	4.3	-	25	1353	1933	1.5	138.929	GKS09-4M□□□100C12	E84AV□□□5524□□0	74
1.0	4.3	-	25	1394	1992	2.2	140.732	GKS11-3M□□□100C12	E84AV□□□5524□□0	66
1.0	4.3	-	25	1373	1961	2.9	140.952	GKS11-4M□□□100C12	E84AV□□□5524□□0	74
1.0	4.0	-	23	1471	2101	1.4	151.012	GKS09-4M□□□100C12	E84AV□□□5524□□0	74



Selection tables

► 120 Hz: P_N = 5.50 kW

n_{22}/n_2 = 1 ... 24.0

n_1 = 146.9 ... 3525 r/min

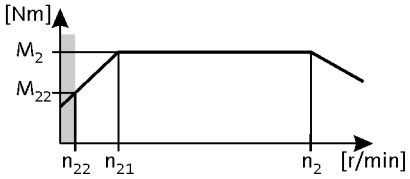

n_{22} [r/min]	n_{21} [r/min]		n_2 [r/min]	M_{22} [Nm]	M_2 [Nm]	c	i			
1.0	3.9	-	23	1492	2132	2.6	153.242	GKS11-4M□□□100C12	E84AV□□□5524□□0	74
0.9	3.8	-	22	1574	2248	1.3	158.816	GKS09-3M□□□100C12	E84AV□□□5524□□0	66
0.9	3.8	-	22	1571	2244	2.2	158.571	GKS11-3M□□□100C12	E84AV□□□5524□□0	66
0.9	3.5	-	21	1658	2368	1.2	170.188	GKS09-4M□□□100C12	E84AV□□□5524□□0	74
0.9	3.5	-	20	1682	2402	2.3	172.667	GKS11-4M□□□100C12	E84AV□□□5524□□0	74
0.8	3.3	-	19	1803	2576	1.1	182.000	GKS09-3M□□□100C12	E84AV□□□5524□□0	66
0.8	3.2	-	19	1849	2641	2.1	186.572	GKS11-3M□□□100C12	E84AV□□□5524□□0	66
0.7	3.0	-	18	1966	2809	2.0	201.890	GKS11-4M□□□100C12	E84AV□□□5524□□0	74
0.7	2.9	-	17	2032	2903	1.0	205.111	GKS09-3M□□□100C12	E84AV□□□5524□□0	66
0.7	2.9	-	17	1993	2847	1.0	204.596	GKS09-4M□□□100C12	E84AV□□□5524□□0	74
0.7	2.9	-	17	2083	2975	1.9	210.222	GKS11-3M□□□100C12	E84AV□□□5524□□0	66
0.7	2.7	-	16	2188	3126	0.9	220.882	GKS09-3M□□□100C12	E84AV□□□5524□□0	66
0.7	2.7	-	16	2243	3205	1.8	226.431	GKS11-3M□□□100C12	E84AV□□□5524□□0	66
0.7	2.6	-	16	2216	3165	1.8	227.481	GKS11-4M□□□100C12	E84AV□□□5524□□0	74
0.6	2.6	-	15	2246	3208	0.9	230.577	GKS09-4M□□□100C12	E84AV□□□5524□□0	74
0.6	2.4	-	14	2528	3611	1.5	255.133	GKS11-3M□□□100C12	E84AV□□□5524□□0	66
0.6	2.4	-	14	2416	3452	1.6	248.106	GKS11-4M□□□100C12	E84AV□□□5524□□0	74
0.5	2.2	-	13	2723	3890	1.5	279.556	GKS11-4M□□□100C12	E84AV□□□5524□□0	74
0.5	2.1	-	12	2836	4051	1.4	286.219	GKS11-3M□□□100C12	E84AV□□□5524□□0	66
0.5	1.9	-	11	3195	4565	1.2	322.500	GKS11-3M□□□100C12	E84AV□□□5524□□0	66
0.5	1.9	-	11	3145	4493	1.3	322.931	GKS11-4M□□□100C12	E84AV□□□5524□□0	74
0.5	1.9	-	11	3133	4476	2.4	321.729	GKS14-4M□□□100C12	E84AV□□□5524□□0	74
0.4	1.7	-	9.7	3544	5063	1.1	363.866	GKS11-4M□□□100C12	E84AV□□□5524□□0	74
0.4	1.7	-	9.7	3531	5044	2.2	362.512	GKS14-4M□□□100C12	E84AV□□□5524□□0	74
0.4	1.5	-	9.0	3805	5435	2.0	390.671	GKS14-4M□□□100C12	E84AV□□□5524□□0	74
0.4	1.5	-	8.9	3855	5507	1.0	395.787	GKS11-4M□□□100C12	E84AV□□□5524□□0	74
0.3	1.4	-	8.0	4287	6124	1.8	440.193	GKS14-4M□□□100C12	E84AV□□□5524□□0	74
0.3	1.4	-	7.9	4343	6205	0.9	445.958	GKS11-4M□□□100C12	E84AV□□□5524□□0	74
0.3	1.2	-	6.9	4997	7139	1.5	513.121	GKS14-4M□□□100C12	E84AV□□□5524□□0	74
0.3	1.0	-	6.1	5631	8044	1.4	578.164	GKS14-4M□□□100C12	E84AV□□□5524□□0	74
0.2	1.0	-	5.7	6065	8664	1.3	622.742	GKS14-4M□□□100C12	E84AV□□□5524□□0	74
0.2	0.9	-	5.0	6834	9763	1.1	701.681	GKS14-4M□□□100C12	E84AV□□□5524□□0	74
0.2	0.7	-	4.4	7849	11213	1.0	805.901	GKS14-4M□□□100C12	E84AV□□□5524□□0	74



Selection tables

► 120 Hz: P_N = 7.50 kW

n_{22}/n_2 = 1 ... 24.0

n_1 = 146.5 ... 3515 r/min

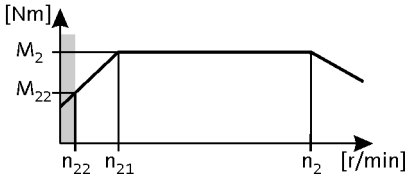

n_{22} [r/min]	n_{21} [r/min]		n_2 [r/min]	M_{22} [Nm]	M_2 [Nm]	c	i			
13	53	-	309	154	220	1.1	11.382	GKS06-3M□□□100C32	E84AV□□□7524□□0	66
13	53	-	309	154	220	2.1	11.378	GKS07-3M□□□100C32	E84AV□□□7524□□0	66
8.5	35	-	204	234	334	2.2	17.270	GKS07-3M□□□100C32	E84AV□□□7524□□0	66
8.2	34	-	197	241	345	1.1	17.809	GKS06-3M□□□100C32	E84AV□□□7524□□0	66
5.8	24	-	139	342	489	1.8	25.244	GKS07-3M□□□100C32	E84AV□□□7524□□0	66
5.6	23	-	135	353	504	1.0	26.017	GKS06-3M□□□100C32	E84AV□□□7524□□0	66
5.2	21	-	124	386	551	0.9	28.461	GKS06-3M□□□100C32	E84AV□□□7524□□0	66
5.2	21	-	124	383	547	1.7	28.274	GKS07-3M□□□100C32	E84AV□□□7524□□0	66
4.6	19	-	110	432	617	1.4	31.858	GKS07-3M□□□100C32	E84AV□□□7524□□0	66
4.2	17	-	100	477	681	3.1	35.193	GKS09-3M□□□100C32	E84AV□□□7524□□0	66
4.1	17	-	98	489	698	1.4	36.063	GKS07-3M□□□100C32	E84AV□□□7524□□0	66
3.7	15	-	89	537	768	2.9	39.662	GKS09-3M□□□100C32	E84AV□□□7524□□0	66
3.3	14	-	80	599	855	1.3	44.178	GKS07-3M□□□100C32	E84AV□□□7524□□0	66
2.9	12	-	70	682	975	1.1	50.345	GKS07-3M□□□100C32	E84AV□□□7524□□0	66
2.6	10	-	61	779	1113	1.0	57.501	GKS07-3M□□□100C32	E84AV□□□7524□□0	66
2.5	10	-	60	792	1131	2.3	58.456	GKS09-3M□□□100C32	E84AV□□□7524□□0	66
2.2	9.1	-	53	893	1275	2.0	65.879	GKS09-3M□□□100C32	E84AV□□□7524□□0	66
2.1	8.5	-	50	962	1374	1.9	70.982	GKS09-3M□□□100C32	E84AV□□□7524□□0	66
1.8	7.5	-	44	1084	1548	1.7	79.996	GKS09-3M□□□100C32	E84AV□□□7524□□0	66
1.6	6.5	-	38	1245	1778	1.5	91.860	GKS09-3M□□□100C32	E84AV□□□7524□□0	66
1.6	6.5	-	38	1243	1776	2.1	91.737	GKS11-3M□□□100C32	E84AV□□□7524□□0	66
1.5	6.0	-	35	1339	1913	1.4	100.551	GKS09-4M□□□100C32	E84AV□□□7524□□0	74
1.4	5.8	-	34	1403	2004	1.3	103.524	GKS09-3M□□□100C32	E84AV□□□7524□□0	66
1.4	5.8	-	34	1401	2001	2.1	103.365	GKS11-3M□□□100C32	E84AV□□□7524□□0	66
1.4	5.9	-	34	1360	1943	2.5	102.119	GKS11-4M□□□100C32	E84AV□□□7524□□0	74
1.3	5.4	-	32	1511	2158	1.3	111.484	GKS09-3M□□□100C32	E84AV□□□7524□□0	66
1.3	5.4	-	32	1508	2155	2.0	111.335	GKS11-3M□□□100C32	E84AV□□□7524□□0	66
1.3	5.3	-	31	1509	2156	1.3	113.320	GKS09-4M□□□100C32	E84AV□□□7524□□0	74
1.3	5.2	-	31	1533	2189	2.5	115.063	GKS11-4M□□□100C32	E84AV□□□7524□□0	74
1.2	4.9	-	29	1642	2346	1.2	123.275	GKS09-4M□□□100C32	E84AV□□□7524□□0	74
1.2	4.8	-	28	1702	2432	1.2	125.641	GKS09-3M□□□100C32	E84AV□□□7524□□0	66
1.2	4.8	-	28	1700	2428	2.0	125.448	GKS11-3M□□□100C32	E84AV□□□7524□□0	66
1.2	4.8	-	28	1666	2380	2.3	125.095	GKS11-4M□□□100C32	E84AV□□□7524□□0	74
1.0	4.3	-	25	1909	2728	1.0	140.921	GKS09-3M□□□100C32	E84AV□□□7524□□0	66
1.1	4.3	-	25	1850	2643	1.1	138.929	GKS09-4M□□□100C32	E84AV□□□7524□□0	74
1.0	4.3	-	25	1907	2724	1.6	140.732	GKS11-3M□□□100C32	E84AV□□□7524□□0	66
1.0	4.3	-	25	1877	2682	2.1	140.952	GKS11-4M□□□100C32	E84AV□□□7524□□0	74
1.0	4.0	-	23	2011	2873	1.0	151.012	GKS09-4M□□□100C32	E84AV□□□7524□□0	74
1.0	3.9	-	23	2041	2916	1.9	153.242	GKS11-4M□□□100C32	E84AV□□□7524□□0	74
0.9	3.8	-	22	2152	3074	1.0	158.816	GKS09-3M□□□100C32	E84AV□□□7524□□0	66
0.9	3.8	-	22	2148	3069	1.6	158.571	GKS11-3M□□□100C32	E84AV□□□7524□□0	66



Selection tables

► 120 Hz: P_N = 7.50 kW

n_{22}/n_2 = 1 ... 24.0

n_1 = 146.5 ... 3515 r/min

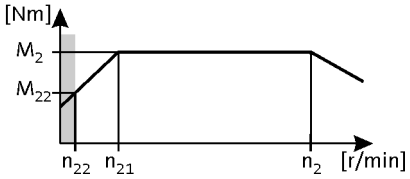

n_{22} [r/min]	n_{21} [r/min]		n_2 [r/min]	M_{22} [Nm]	M_2 [Nm]	c	i			
0.9	3.5	-	20	2300	3285	1.7	172.667	GKS11-4M□□□100C32	E84AV□□□7524□□0	74
0.8	3.4	-	20	2372	3388	3.2	178.072	GKS14-4M□□□100C32	E84AV□□□7524□□0	74
0.8	3.2	-	19	2528	3611	1.6	186.572	GKS11-3M□□□100C32	E84AV□□□7524□□0	66
0.7	2.9	-	17	2848	4069	1.4	210.222	GKS11-3M□□□100C32	E84AV□□□7524□□0	66
0.7	3.0	-	17	2689	3841	1.5	201.890	GKS11-4M□□□100C32	E84AV□□□7524□□0	74
0.7	2.7	-	16	3068	4383	1.3	226.431	GKS11-3M□□□100C32	E84AV□□□7524□□0	66
0.6	2.6	-	16	3030	4328	1.3	227.481	GKS11-4M□□□100C32	E84AV□□□7524□□0	74
0.6	2.4	-	14	3457	4938	1.1	255.133	GKS11-3M□□□100C32	E84AV□□□7524□□0	66
0.6	2.4	-	14	3304	4721	1.2	248.106	GKS11-4M□□□100C32	E84AV□□□7524□□0	74
0.5	2.2	-	13	3723	5319	1.1	279.556	GKS11-4M□□□100C32	E84AV□□□7524□□0	74
0.5	2.1	-	12	3878	5540	1.0	286.219	GKS11-3M□□□100C32	E84AV□□□7524□□0	66
0.5	1.9	-	11	4301	6144	0.9	322.931	GKS11-4M□□□100C32	E84AV□□□7524□□0	74
0.5	1.9	-	11	4285	6121	1.8	321.729	GKS14-4M□□□100C32	E84AV□□□7524□□0	74
0.4	1.7	-	9.7	4828	6897	1.6	362.512	GKS14-4M□□□100C32	E84AV□□□7524□□0	74
0.4	1.5	-	9.0	5203	7433	1.5	390.671	GKS14-4M□□□100C32	E84AV□□□7524□□0	74
0.3	1.4	-	8.0	5863	8375	1.3	440.193	GKS14-4M□□□100C32	E84AV□□□7524□□0	74
0.3	1.2	-	6.9	6834	9763	1.1	513.121	GKS14-4M□□□100C32	E84AV□□□7524□□0	74
0.3	1.0	-	6.1	7700	11000	1.0	578.164	GKS14-4M□□□100C32	E84AV□□□7524□□0	74
0.2	1.0	-	5.6	8294	11848	0.9	622.742	GKS14-4M□□□100C32	E84AV□□□7524□□0	74



Selection tables

► 120 Hz: P_N = 11.00 kW

n_{22}/n_2 = 1 ... 24.0

n_1 = 147.1 ... 3530 r/min

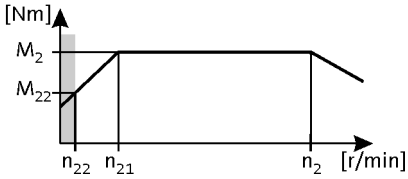

n_{22}	n_{21}		n_2	M_{22}	M_2	c	i			
[r/min]	[r/min]		[r/min]	[Nm]	[Nm]					
13	53	-	310	206	322	1.4	11.378	GKS07-3M□□□112C22	E84AV□□□1134□□0	66
9.1	37	-	219	292	456	3.0	16.122	GKS09-3M□□□112C22	E84AV□□□1134□□0	66
8.5	35	-	204	312	488	1.5	17.270	GKS07-3M□□□112C22	E84AV□□□1134□□0	66
8.4	34	-	201	317	496	3.0	17.536	GKS09-3M□□□112C22	E84AV□□□1134□□0	66
5.8	24	-	140	457	714	1.2	25.244	GKS07-3M□□□112C22	E84AV□□□1134□□0	66
5.7	23	-	138	464	725	3.0	25.649	GKS09-3M□□□112C22	E84AV□□□1134□□0	66
5.2	21	-	125	512	799	1.1	28.274	GKS07-3M□□□112C22	E84AV□□□1134□□0	66
5.0	21	-	121	529	826	2.7	29.228	GKS09-3M□□□112C22	E84AV□□□1134□□0	66
4.6	19	-	111	576	901	1.0	31.858	GKS07-3M□□□112C22	E84AV□□□1134□□0	66
4.5	18	-	107	596	931	2.4	32.940	GKS09-3M□□□112C22	E84AV□□□1134□□0	66
4.2	17	-	100	637	995	2.3	35.193	GKS09-3M□□□112C22	E84AV□□□1134□□0	66
4.1	17	-	99	647	1010	3.1	35.741	GKS11-3M□□□112C22	E84AV□□□1134□□0	66
4.1	17	-	98	652	1019	1.0	36.063	GKS07-3M□□□112C22	E84AV□□□1134□□0	66
3.7	15	-	89	718	1121	2.0	39.662	GKS09-3M□□□112C22	E84AV□□□1134□□0	66
3.7	15	-	88	729	1138	3.1	40.272	GKS11-3M□□□112C22	E84AV□□□1134□□0	66
3.4	14	-	82	781	1220	2.1	43.146	GKS09-3M□□□112C22	E84AV□□□1134□□0	66
3.0	12	-	73	880	1375	1.9	48.625	GKS09-3M□□□112C22	E84AV□□□1134□□0	66
2.6	10	-	61	1044	1631	2.5	57.683	GKS11-3M□□□112C22	E84AV□□□1134□□0	66
2.5	10	-	60	1058	1652	1.6	58.456	GKS09-3M□□□112C22	E84AV□□□1134□□0	66
2.2	9.1	-	54	1192	1862	1.4	65.879	GKS09-3M□□□112C22	E84AV□□□1134□□0	66
2.3	9.2	-	54	1176	1837	2.5	64.995	GKS11-3M□□□112C22	E84AV□□□1134□□0	66
2.1	8.5	-	50	1284	2007	1.3	70.982	GKS09-3M□□□112C22	E84AV□□□1134□□0	66
2.1	8.5	-	50	1282	2004	2.1	70.887	GKS11-3M□□□112C22	E84AV□□□1134□□0	66
1.8	7.5	-	44	1447	2261	1.2	79.996	GKS09-3M□□□112C22	E84AV□□□1134□□0	66
1.8	7.5	-	44	1445	2258	2.1	79.873	GKS11-3M□□□112C22	E84AV□□□1134□□0	66
1.6	6.5	-	39	1660	2593	1.6	91.737	GKS11-3M□□□112C22	E84AV□□□1134□□0	66
1.6	6.6	-	39	1638	2560	2.0	90.551	GKS14-3M□□□112C22	E84AV□□□1134□□0	66
1.6	6.5	-	38	1662	2597	1.0	91.860	GKS09-3M□□□112C22	E84AV□□□1134□□0	66
1.5	6.2	-	36	1733	2708	2.9	97.467	GKS14-4M□□□112C22	E84AV□□□1134□□0	74
1.5	6.0	-	35	1788	2794	0.9	100.551	GKS09-4M□□□112C22	E84AV□□□1134□□0	74
1.4	5.9	-	35	1816	2838	1.7	102.119	GKS11-4M□□□112C22	E84AV□□□1134□□0	74
1.4	5.9	-	35	1846	2884	2.0	102.029	GKS14-3M□□□112C22	E84AV□□□1134□□0	66
1.4	5.8	-	34	1870	2922	1.6	103.365	GKS11-3M□□□112C22	E84AV□□□1134□□0	66
1.3	5.4	-	32	2017	3151	0.9	111.484	GKS09-3M□□□112C22	E84AV□□□1134□□0	66
1.3	5.4	-	32	2014	3147	1.5	111.335	GKS11-3M□□□112C22	E84AV□□□1134□□0	66
1.3	5.5	-	32	1988	3106	1.7	109.896	GKS14-3M□□□112C22	E84AV□□□1134□□0	66
1.3	5.5	-	32	1953	3052	2.9	109.822	GKS14-4M□□□112C22	E84AV□□□1134□□0	74
1.3	5.3	-	31	2015	3149	0.9	113.320	GKS09-4M□□□112C22	E84AV□□□1134□□0	74
1.3	5.2	-	31	2046	3197	1.7	115.063	GKS11-4M□□□112C22	E84AV□□□1134□□0	74
1.2	5.0	-	30	2125	3320	3.1	119.493	GKS14-4M□□□112C22	E84AV□□□1134□□0	74
1.2	4.9	-	29	2240	3500	1.9	123.826	GKS14-3M□□□112C22	E84AV□□□1134□□0	66



Selection tables

► 120 Hz: P_N = 11.00 kW

n_{22}/n_2 = 1 ... 24.0

n_1 = 147.1 ... 3530 r/min

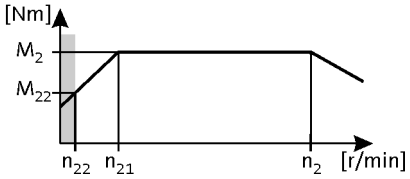

n_{22} [r/min]	n_{21} [r/min]		n_2 [r/min]	M_{22} [Nm]	M_2 [Nm]	c	i			
1.2	4.8	-	28	2270	3546	1.5	125.448	GKS11-3M□□□112C22	E84AV□□□1134□□0	66
1.2	4.8	-	28	2225	3476	1.6	125.095	GKS11-4M□□□112C22	E84AV□□□1134□□0	74
1.1	4.5	-	26	2394	3741	2.9	134.640	GKS14-4M□□□112C22	E84AV□□□1134□□0	74
1.1	4.3	-	25	2546	3978	1.2	140.732	GKS11-3M□□□112C22	E84AV□□□1134□□0	66
1.0	4.3	-	25	2507	3917	1.4	140.952	GKS11-4M□□□112C22	E84AV□□□1134□□0	74
1.1	4.3	-	25	2513	3927	1.5	138.913	GKS14-3M□□□112C22	E84AV□□□1134□□0	66
1.0	3.9	-	23	2725	4258	1.3	153.242	GKS11-4M□□□112C22	E84AV□□□1134□□0	74
0.9	3.8	-	23	2832	4424	1.5	156.522	GKS14-3M□□□112C22	E84AV□□□1134□□0	66
0.9	3.8	-	22	2869	4482	1.2	158.571	GKS11-3M□□□112C22	E84AV□□□1134□□0	66
0.9	3.8	-	22	2811	4391	2.5	158.039	GKS14-4M□□□112C22	E84AV□□□1134□□0	74
0.9	3.5	-	20	3071	4798	1.2	172.667	GKS11-4M□□□112C22	E84AV□□□1134□□0	74
0.8	3.4	-	20	3167	4948	2.2	178.072	GKS14-4M□□□112C22	E84AV□□□1134□□0	74
0.8	3.2	-	19	3375	5274	1.1	186.572	GKS11-3M□□□112C22	E84AV□□□1134□□0	66
0.8	3.2	-	19	3375	5274	2.1	186.572	GKS14-3M□□□112C22	E84AV□□□1134□□0	66
0.7	3.0	-	18	3590	5610	1.0	201.890	GKS11-4M□□□112C22	E84AV□□□1134□□0	74
0.8	3.1	-	18	3446	5384	2.0	193.754	GKS14-4M□□□112C22	E84AV□□□1134□□0	74
0.7	2.9	-	17	3803	5942	0.9	210.222	GKS11-3M□□□112C22	E84AV□□□1134□□0	66
0.7	2.9	-	17	3803	5942	1.8	210.222	GKS14-3M□□□112C22	E84AV□□□1134□□0	66
0.7	2.7	-	16	4096	6401	1.7	226.431	GKS14-3M□□□112C22	E84AV□□□1134□□0	66
0.7	2.8	-	16	3882	6066	1.8	218.315	GKS14-4M□□□112C22	E84AV□□□1134□□0	74
0.6	2.5	-	15	4223	6598	1.6	237.467	GKS14-4M□□□112C22	E84AV□□□1134□□0	74
0.6	2.4	-	14	4616	7212	1.5	255.133	GKS14-3M□□□112C22	E84AV□□□1134□□0	66
0.6	2.2	-	13	4758	7435	1.5	267.568	GKS14-4M□□□112C22	E84AV□□□1134□□0	74
0.5	2.1	-	12	5178	8091	1.4	286.219	GKS14-3M□□□112C22	E84AV□□□1134□□0	66
0.5	1.9	-	11	5722	8940	1.2	321.729	GKS14-4M□□□112C22	E84AV□□□1134□□0	74
0.5	1.9	-	11	5834	9116	1.2	322.500	GKS14-3M□□□112C22	E84AV□□□1134□□0	66
0.4	1.7	-	9.7	6447	10073	1.1	362.512	GKS14-4M□□□112C22	E84AV□□□1134□□0	74
0.4	1.5	-	9.0	6948	10855	1.0	390.671	GKS14-4M□□□112C22	E84AV□□□1134□□0	74



Selection tables

► 120 Hz: P_N = 15.00 kW

n_{22}/n_2 = 1 ... 24.0

n_1 = 148.3 ... 3560 r/min

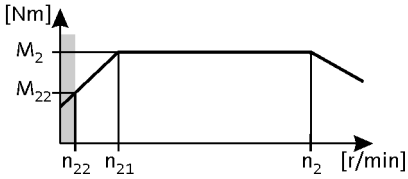

n_{22} [r/min]	n_{21} [r/min]		n_2 [r/min]	M_{22} [Nm]	M_2 [Nm]	c	i			
13	53	-	313	278	435	1.1	11.378	GKS07-3M□□□132C12	E84AV□□□1534□□0	66
9.2	37	-	221	394	616	2.2	16.122	GKS09-3M□□□132C12	E84AV□□□1534□□0	66
8.6	35	-	206	422	660	1.1	17.270	GKS07-3M□□□132C12	E84AV□□□1534□□0	66
8.5	34	-	203	429	670	2.2	17.536	GKS09-3M□□□132C12	E84AV□□□1534□□0	66
5.9	24	-	141	618	965	0.9	25.244	GKS07-3M□□□132C12	E84AV□□□1534□□0	66
5.8	23	-	139	627	980	2.2	25.649	GKS09-3M□□□132C12	E84AV□□□1534□□0	66
5.1	21	-	122	715	1117	2.0	29.228	GKS09-3M□□□132C12	E84AV□□□1534□□0	66
4.5	18	-	108	806	1259	1.8	32.940	GKS09-3M□□□132C12	E84AV□□□1534□□0	66
4.2	17	-	101	861	1345	1.7	35.193	GKS09-3M□□□132C12	E84AV□□□1534□□0	66
4.2	17	-	100	874	1366	3.1	35.741	GKS11-3M□□□132C12	E84AV□□□1534□□0	66
3.7	15	-	90	970	1516	1.5	39.662	GKS09-3M□□□132C12	E84AV□□□1534□□0	66
3.7	15	-	88	985	1539	2.9	40.272	GKS11-3M□□□132C12	E84AV□□□1534□□0	66
3.4	14	-	83	1055	1649	1.6	43.146	GKS09-3M□□□132C12	E84AV□□□1534□□0	66
3.4	14	-	81	1071	1674	3.0	43.783	GKS11-3M□□□132C12	E84AV□□□1534□□0	66
3.1	12	-	73	1189	1859	1.4	48.625	GKS09-3M□□□132C12	E84AV□□□1534□□0	66
3.0	12	-	72	1207	1886	2.7	49.333	GKS11-3M□□□132C12	E84AV□□□1534□□0	66
2.6	10	-	62	1411	2205	2.3	57.683	GKS11-3M□□□132C12	E84AV□□□1534□□0	66
2.5	10	-	61	1430	2234	1.2	58.456	GKS09-3M□□□132C12	E84AV□□□1534□□0	66
2.3	9.2	-	55	1590	2484	2.1	64.995	GKS11-3M□□□132C12	E84AV□□□1534□□0	66
2.3	9.1	-	54	1612	2518	1.0	65.879	GKS09-3M□□□132C12	E84AV□□□1534□□0	66
2.1	8.5	-	50	1736	2713	1.0	70.982	GKS09-3M□□□132C12	E84AV□□□1534□□0	66
2.1	8.5	-	50	1734	2709	1.9	70.887	GKS11-3M□□□132C12	E84AV□□□1534□□0	66
1.9	7.5	-	45	1954	3053	1.7	79.873	GKS11-3M□□□132C12	E84AV□□□1534□□0	66
1.6	6.5	-	39	2244	3506	1.5	91.737	GKS11-3M□□□132C12	E84AV□□□1534□□0	66
1.6	6.6	-	39	2215	3461	2.8	90.551	GKS14-3M□□□132C12	E84AV□□□1534□□0	66
1.5	6.2	-	37	2344	3662	2.3	97.467	GKS14-4M□□□132C12	E84AV□□□1534□□0	74
1.5	5.9	-	35	2456	3837	1.3	102.119	GKS11-4M□□□132C12	E84AV□□□1534□□0	74
1.5	5.9	-	35	2496	3900	2.5	102.029	GKS14-3M□□□132C12	E84AV□□□1534□□0	66
1.4	5.8	-	34	2529	3951	1.3	103.365	GKS11-3M□□□132C12	E84AV□□□1534□□0	66
1.3	5.4	-	32	2723	4255	1.3	111.335	GKS11-3M□□□132C12	E84AV□□□1534□□0	66
1.4	5.5	-	32	2641	4126	2.3	109.822	GKS14-4M□□□132C12	E84AV□□□1534□□0	74
1.4	5.5	-	32	2688	4200	2.4	109.896	GKS14-3M□□□132C12	E84AV□□□1534□□0	66
1.3	5.2	-	31	2767	4323	1.3	115.063	GKS11-4M□□□132C12	E84AV□□□1534□□0	74
1.2	5.0	-	30	2873	4490	2.3	119.493	GKS14-4M□□□132C12	E84AV□□□1534□□0	74
1.2	4.8	-	29	3008	4700	1.2	125.095	GKS11-4M□□□132C12	E84AV□□□1534□□0	74
1.2	4.9	-	29	3029	4733	2.3	123.826	GKS14-3M□□□132C12	E84AV□□□1534□□0	66
1.2	4.8	-	28	3069	4795	1.2	125.448	GKS11-3M□□□132C12	E84AV□□□1534□□0	66
1.1	4.3	-	26	3398	5309	2.1	138.913	GKS14-3M□□□132C12	E84AV□□□1534□□0	66
1.1	4.5	-	26	3238	5059	2.1	134.640	GKS14-4M□□□132C12	E84AV□□□1534□□0	74
1.1	4.3	-	25	3389	5296	1.1	140.952	GKS11-4M□□□132C12	E84AV□□□1534□□0	74
1.0	3.9	-	23	3685	5758	1.0	153.242	GKS11-4M□□□132C12	E84AV□□□1534□□0	74



Selection tables

► 120 Hz: P_N = 15.00 kW

n_{22}/n_2 = 1 ... 24.0

n_1 = 148.3 ... 3560 r/min

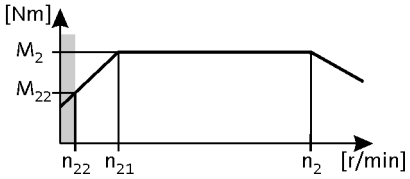

n_{22} [r/min]	n_{21} [r/min]		n_2 [r/min]	M_{22} [Nm]	M_2 [Nm]	c	i			
1.0	3.8	-	23	3829	5983	1.8	156.522	GKS14-3M□□□132C12	E84AV□□□1534□□0	66
0.9	3.8	-	23	3800	5938	1.8	158.039	GKS14-4M□□□132C12	E84AV□□□1534□□0	74
0.8	3.4	-	20	4282	6690	1.6	178.072	GKS14-4M□□□132C12	E84AV□□□1534□□0	74
0.8	3.2	-	19	4564	7131	1.5	186.572	GKS14-3M□□□132C12	E84AV□□□1534□□0	66
0.8	3.1	-	18	4659	7280	1.5	193.754	GKS14-4M□□□132C12	E84AV□□□1534□□0	74
0.7	2.9	-	17	5142	8035	1.4	210.222	GKS14-3M□□□132C12	E84AV□□□1534□□0	66
0.7	2.7	-	16	5539	8655	1.3	226.431	GKS14-3M□□□132C12	E84AV□□□1534□□0	66
0.7	2.8	-	16	5250	8202	1.3	218.315	GKS14-4M□□□132C12	E84AV□□□1534□□0	74
0.6	2.5	-	15	5710	8922	1.2	237.467	GKS14-4M□□□132C12	E84AV□□□1534□□0	74
0.6	2.4	-	14	6241	9752	1.1	255.133	GKS14-3M□□□132C12	E84AV□□□1534□□0	66
0.6	2.2	-	13	6434	10053	1.1	267.568	GKS14-4M□□□132C12	E84AV□□□1534□□0	74
0.5	2.1	-	12	7001	10940	1.0	286.219	GKS14-3M□□□132C12	E84AV□□□1534□□0	66



Selection tables

► 120 Hz: P_N = 18.50 kW

n_{22}/n_2 = 1 ... 24.0

n_1 = 148.3 ... 3560 r/min

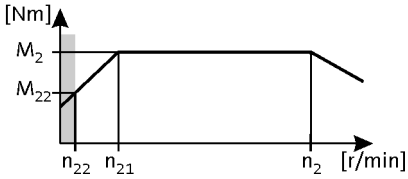

n_{22}	n_{21}		n_2	M_{22}	M_2	c	i			
[r/min]	[r/min]		[r/min]	[Nm]	[Nm]					
9.2	37	-	221	486	760	1.8	16.122	GKS09-3M□□□132C22	E84AV□□□1834□□0	66
8.6	35	-	206	521	814	0.9	17.270	GKS07-3M□□□132C22	E84AV□□□1834□□0	66
8.5	34	-	203	529	827	1.8	17.536	GKS09-3M□□□132C22	E84AV□□□1834□□0	66
5.8	23	-	139	774	1209	1.8	25.649	GKS09-3M□□□132C22	E84AV□□□1834□□0	66
5.3	21	-	127	845	1321	2.9	28.021	GKS11-3M□□□132C22	E84AV□□□1834□□0	66
5.1	21	-	122	882	1378	1.6	29.228	GKS09-3M□□□132C22	E84AV□□□1834□□0	66
4.7	19	-	113	953	1488	2.8	31.573	GKS11-3M□□□132C22	E84AV□□□1834□□0	66
4.5	18	-	108	994	1553	1.4	32.940	GKS09-3M□□□132C22	E84AV□□□1834□□0	66
4.2	17	-	101	1062	1659	1.4	35.193	GKS09-3M□□□132C22	E84AV□□□1834□□0	66
4.2	17	-	100	1078	1685	2.5	35.741	GKS11-3M□□□132C22	E84AV□□□1834□□0	66
3.7	15	-	90	1197	1870	1.2	39.662	GKS09-3M□□□132C22	E84AV□□□1834□□0	66
3.7	15	-	88	1215	1898	2.3	40.272	GKS11-3M□□□132C22	E84AV□□□1834□□0	66
3.4	14	-	83	1302	2034	1.3	43.146	GKS09-3M□□□132C22	E84AV□□□1834□□0	66
3.4	14	-	81	1321	2064	2.4	43.783	GKS11-3M□□□132C22	E84AV□□□1834□□0	66
3.1	12	-	73	1467	2292	1.1	48.625	GKS09-3M□□□132C22	E84AV□□□1834□□0	66
3.0	12	-	72	1488	2326	2.2	49.333	GKS11-3M□□□132C22	E84AV□□□1834□□0	66
2.6	10	-	62	1740	2719	1.9	57.683	GKS11-3M□□□132C22	E84AV□□□1834□□0	66
2.5	10	-	61	1764	2756	0.9	58.456	GKS09-3M□□□132C22	E84AV□□□1834□□0	66
2.3	9.2	-	55	1961	3064	1.7	64.995	GKS11-3M□□□132C22	E84AV□□□1834□□0	66
2.2	8.7	-	52	2080	3250	3.0	68.942	GKS14-3M□□□132C22	E84AV□□□1834□□0	66
2.1	8.5	-	50	2139	3342	1.5	70.887	GKS11-3M□□□132C22	E84AV□□□1834□□0	66
1.9	7.7	-	46	2344	3662	2.7	77.681	GKS14-3M□□□132C22	E84AV□□□1834□□0	66
1.9	7.5	-	45	2410	3765	1.4	79.873	GKS11-3M□□□132C22	E84AV□□□1834□□0	66
1.6	6.5	-	39	2768	4324	1.2	91.737	GKS11-3M□□□132C22	E84AV□□□1834□□0	66
1.6	6.6	-	39	2732	4269	2.3	90.551	GKS14-3M□□□132C22	E84AV□□□1834□□0	66
1.5	6.2	-	37	2891	4516	1.9	97.467	GKS14-4M□□□132C22	E84AV□□□1834□□0	74
1.5	5.9	-	35	3029	4732	1.0	102.119	GKS11-4M□□□132C22	E84AV□□□1834□□0	74
1.5	5.9	-	35	3078	4810	2.1	102.029	GKS14-3M□□□132C22	E84AV□□□1834□□0	66
1.4	5.8	-	34	3119	4873	1.1	103.365	GKS11-3M□□□132C22	E84AV□□□1834□□0	66
1.3	5.4	-	32	3359	5248	1.1	111.335	GKS11-3M□□□132C22	E84AV□□□1834□□0	66
1.4	5.5	-	32	3257	5089	1.8	109.822	GKS14-4M□□□132C22	E84AV□□□1834□□0	74
1.4	5.5	-	32	3316	5180	1.9	109.896	GKS14-3M□□□132C22	E84AV□□□1834□□0	66
1.3	5.2	-	31	3412	5332	1.0	115.063	GKS11-4M□□□132C22	E84AV□□□1834□□0	74
1.2	5.0	-	30	3544	5537	1.8	119.493	GKS14-4M□□□132C22	E84AV□□□1834□□0	74
1.2	4.8	-	29	3710	5797	0.9	125.095	GKS11-4M□□□132C22	E84AV□□□1834□□0	74
1.2	4.9	-	29	3736	5837	1.9	123.826	GKS14-3M□□□132C22	E84AV□□□1834□□0	66
1.2	4.8	-	28	3785	5914	1.0	125.448	GKS11-3M□□□132C22	E84AV□□□1834□□0	66
1.1	4.5	-	26	3993	6239	1.7	134.640	GKS14-4M□□□132C22	E84AV□□□1834□□0	74
1.1	4.3	-	26	4191	6548	1.7	138.913	GKS14-3M□□□132C22	E84AV□□□1834□□0	66
0.9	3.8	-	23	4687	7323	1.5	158.039	GKS14-4M□□□132C22	E84AV□□□1834□□0	74
1.0	3.8	-	23	4722	7378	1.5	156.522	GKS14-3M□□□132C22	E84AV□□□1834□□0	66



Selection tables

► 120 Hz: P_N = 18.50 kW

n_{22}/n_2 = 1 ... 24.0

n_1 = 148.3 ... 3560 r/min

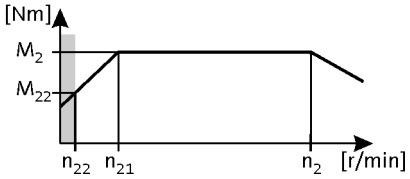

n_{22} [r/min]	n_{21} [r/min]		n_2 [r/min]	M_{22} [Nm]	M_2 [Nm]	c	i			
0.8	3.4	-	20	5281	8252	1.3	178.072	GKS14-4M□□□132C22	E84AV□□□1834□□0	74
0.8	3.2	-	19	5629	8795	1.2	186.572	GKS14-3M□□□132C22	E84AV□□□1834□□0	66
0.8	3.1	-	18	5746	8978	1.2	193.754	GKS14-4M□□□132C22	E84AV□□□1834□□0	74
0.7	2.9	-	17	6342	9910	1.1	210.222	GKS14-3M□□□132C22	E84AV□□□1834□□0	66
0.7	2.7	-	16	6831	10674	1.0	226.431	GKS14-3M□□□132C22	E84AV□□□1834□□0	66
0.7	2.8	-	16	6474	10116	1.1	218.315	GKS14-4M□□□132C22	E84AV□□□1834□□0	74
0.6	2.5	-	15	7042	11004	1.0	237.467	GKS14-4M□□□132C22	E84AV□□□1834□□0	74
0.6	2.4	-	14	7697	12027	0.9	255.133	GKS14-3M□□□132C22	E84AV□□□1834□□0	66



Selection tables

► 120 Hz: P_N = 22.00 kW

n_{22}/n_2 = 1 ... 24.0

n_1 = 147.9 ... 3550 r/min

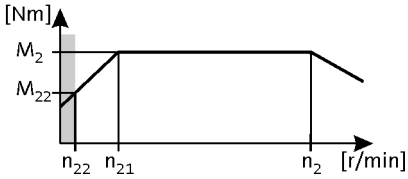

n_{22}	n_{21}		n_2	M_{22}	M_2	c	i			
[r/min]	[r/min]		[r/min]	[Nm]	[Nm]					
9.2	37	-	220	580	906	1.5	16.122	GKS09-3M□□□132C32	E84AV□□□2234□□0	66
8.4	34	-	202	631	986	1.5	17.536	GKS09-3M□□□132C32	E84AV□□□2234□□0	66
5.8	23	-	138	923	1442	1.5	25.649	GKS09-3M□□□132C32	E84AV□□□2234□□0	66
5.3	21	-	127	1008	1575	2.5	28.021	GKS11-3M□□□132C32	E84AV□□□2234□□0	66
5.1	21	-	122	1052	1643	1.3	29.228	GKS09-3M□□□132C32	E84AV□□□2234□□0	66
4.7	19	-	112	1136	1775	2.3	31.573	GKS11-3M□□□132C32	E84AV□□□2234□□0	66
4.5	18	-	108	1185	1852	1.2	32.940	GKS09-3M□□□132C32	E84AV□□□2234□□0	66
4.2	17	-	101	1266	1978	1.1	35.193	GKS09-3M□□□132C32	E84AV□□□2234□□0	66
4.1	17	-	99	1286	2009	2.1	35.741	GKS11-3M□□□132C32	E84AV□□□2234□□0	66
3.7	15	-	90	1427	2230	1.0	39.662	GKS09-3M□□□132C32	E84AV□□□2234□□0	66
3.7	15	-	88	1449	2264	1.9	40.272	GKS11-3M□□□132C32	E84AV□□□2234□□0	66
3.4	14	-	82	1552	2426	1.1	43.146	GKS09-3M□□□132C32	E84AV□□□2234□□0	66
3.4	14	-	81	1575	2461	2.0	43.783	GKS11-3M□□□132C32	E84AV□□□2234□□0	66
3.0	12	-	73	1749	2734	0.9	48.625	GKS09-3M□□□132C32	E84AV□□□2234□□0	66
3.0	12	-	72	1775	2773	1.8	49.333	GKS11-3M□□□132C32	E84AV□□□2234□□0	66
2.6	11	-	63	2024	3162	2.9	56.251	GKS14-3M□□□132C32	E84AV□□□2234□□0	66
2.6	10	-	62	2075	3243	1.6	57.683	GKS11-3M□□□132C32	E84AV□□□2234□□0	66
2.3	9.5	-	56	2280	3563	2.7	63.382	GKS14-3M□□□132C32	E84AV□□□2234□□0	66
2.3	9.2	-	55	2338	3654	1.4	64.995	GKS11-3M□□□132C32	E84AV□□□2234□□0	66
2.2	8.7	-	52	2480	3876	2.5	68.942	GKS14-3M□□□132C32	E84AV□□□2234□□0	66
2.1	8.5	-	50	2550	3985	1.3	70.887	GKS11-3M□□□132C32	E84AV□□□2234□□0	66
1.9	7.7	-	46	2795	4367	2.2	77.681	GKS14-3M□□□132C32	E84AV□□□2234□□0	66
1.9	7.5	-	44	2874	4490	1.1	79.873	GKS11-3M□□□132C32	E84AV□□□2234□□0	66
1.6	6.5	-	39	3301	5157	1.0	91.737	GKS11-3M□□□132C32	E84AV□□□2234□□0	66
1.6	6.6	-	39	3258	5090	1.9	90.551	GKS14-3M□□□132C32	E84AV□□□2234□□0	66
1.5	6.2	-	36	3447	5386	1.6	97.467	GKS14-4M□□□132C32	E84AV□□□2234□□0	74
1.5	5.9	-	35	3671	5736	1.7	102.029	GKS14-3M□□□132C32	E84AV□□□2234□□0	66
1.3	5.4	-	32	4006	6259	0.9	111.335	GKS11-3M□□□132C32	E84AV□□□2234□□0	66
1.4	5.5	-	32	3884	6069	1.5	109.822	GKS14-4M□□□132C32	E84AV□□□2234□□0	74
1.4	5.5	-	32	3954	6178	1.6	109.896	GKS14-3M□□□132C32	E84AV□□□2234□□0	66
1.2	5.0	-	30	4226	6603	1.5	119.493	GKS14-4M□□□132C32	E84AV□□□2234□□0	74
1.2	4.9	-	29	4455	6961	1.6	123.826	GKS14-3M□□□132C32	E84AV□□□2234□□0	66
1.1	4.5	-	26	4762	7440	1.4	134.640	GKS14-4M□□□132C32	E84AV□□□2234□□0	74
1.1	4.3	-	26	4998	7809	1.4	138.913	GKS14-3M□□□132C32	E84AV□□□2234□□0	66
0.9	3.8	-	23	5589	8733	1.2	158.039	GKS14-4M□□□132C32	E84AV□□□2234□□0	74
1.0	3.8	-	23	5631	8799	1.3	156.522	GKS14-3M□□□132C32	E84AV□□□2234□□0	66
0.8	3.4	-	20	6298	9840	1.1	178.072	GKS14-4M□□□132C32	E84AV□□□2234□□0	74
0.8	3.2	-	19	6713	10488	1.0	186.572	GKS14-3M□□□132C32	E84AV□□□2234□□0	66
0.8	3.1	-	18	6852	10707	1.0	193.754	GKS14-4M□□□132C32	E84AV□□□2234□□0	74
0.7	2.9	-	17	7563	11818	0.9	210.222	GKS14-3M□□□132C32	E84AV□□□2234□□0	66



Dimensions

GKS□□-3M H□R

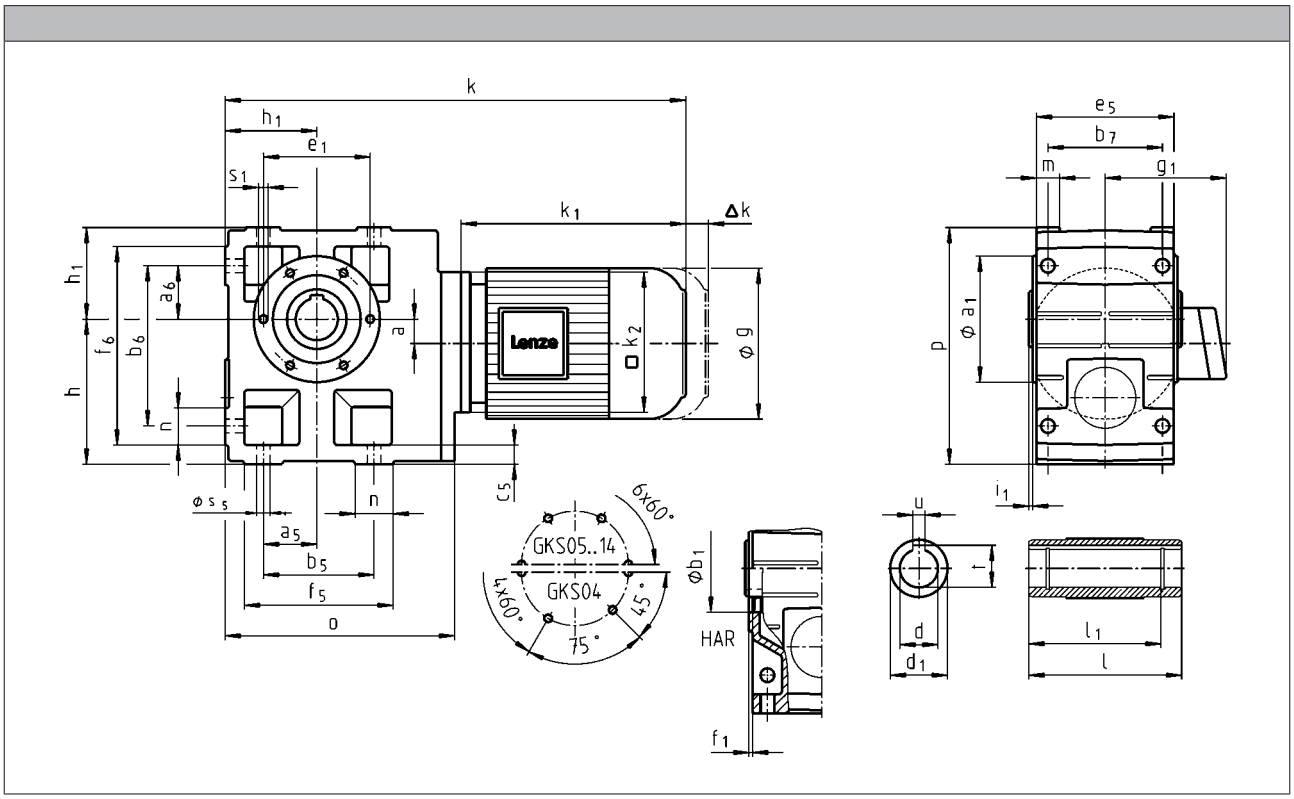



		063C32 063C42	071C32 071C42	080C32 080C42	090C32	100C12 100C32	112C22	132C12 132C22	132C32
g		123	139	156	176	194	218	258	
g_1	MFEMAXX	100	109	150	157	166	176	195	
	MFEMABR	107	118	132	137	147	158	187	
k_1	MFEMAXX	187	207	224.5	274	324	319	403	
k_2		120		145	180		222	265	
Δ k	MFEMABR	40	52	73	68	76	90	109.5	
	MFFMAXX	128				109	102	115	
	MFFMABR	170	165	183	181	170	183	201.5	
		k							
GKS04		399	419	441					
GKS05		419	439	461	521				
GKS06		475	495	517	577	627			
GKS07				573	633	683	684	776	
GKS09					704	754	755	847	
GKS11						845	846	938	
GKS14							945	1037	

	a	h[1)]	h_1	o	p[1)]
GKS04	20	100	71	203	171
GKS05	23	125	80	232	205
GKS06	28	150	100	291	250
GKS07	34	190	120	354	310
GKS09	41	236	150	429	386
GKS11	54	300	185	527	485
GKS14	67	375	230	636	605

	d	d_1	l[1)]	l_1	u	t	i_1	a_1	b_1	e_1	f_1	s_1
	H7				JS9	+0,2			H7			
GKS04	25 30	45 45	115 115	100 100	8 8	28.3 33.3	2.5 2.5	104	75	90	3	M6x12
GKS05	30 35	50 50	140 140	124 124	8 10	33.3 38.3	4 4	118	80	100	4	M8x15
GKS06	40 45	65 65	160 160	140 140	12 14	43.3 48.8	5 5	140	100	120	4	M10x16
GKS07	50 55	75 75	200 200	175 175	14 16	53.8 59.3	5 5	165	115	140	5	M12x18
GKS09	60 70	95 95	240 240	210 210	18 20	64.4 74.9	5 5	205	145	175	6	M16x24
GKS11	70 80	108 108	290 290	250 250	20 22	74.9 85.4	6 6	240	170	205	4	M20x32
GKS14	100	135	350	305	28	106.4	7	290	170	250	6	M24x35

	a_5	a_6	b_5	b_6	b_7	c_5	e_5	f_5	f_6	m	n	s_5
GKS04	45	45	110	119	85	14	105	132	141	21	22	9
GKS05	47.5	47.5	115	140	105	17	115	144	169	21	29	11
GKS06	60	60	155	170	120	20	145	191	206	23	36	14
GKS07	70	70	190	210	150	25	180	235	255	28	45	18
GKS09	90	90	240	266	185	30	222	300	326	37	60	22
GKS11	105	105	290	325	225	40	270	363	398	43	73	26
GKS14	135	135	360	415	275	50	328	442	497	52	82	33

[1)] k_2 !



Dimensions

GKS□□-3M HAK

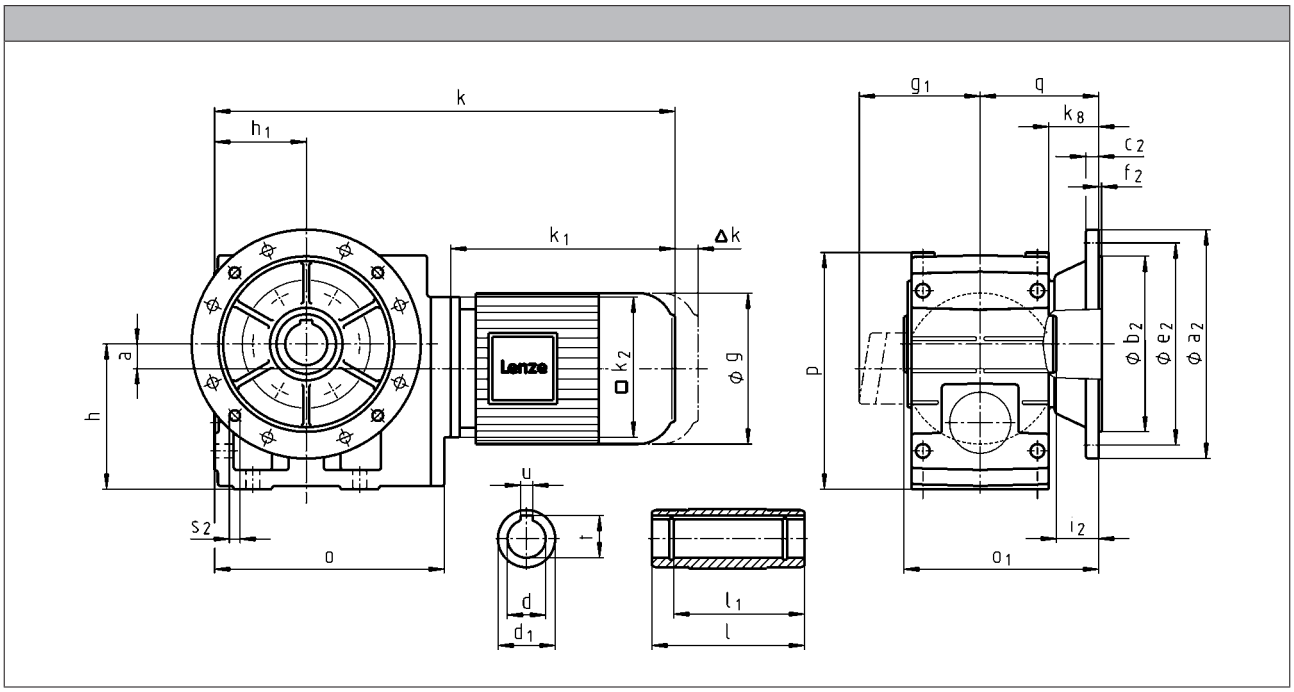



		063C32 063C42	071C32 071C42	080C32 080C42	090C32	100C12 100C32	112C22	132C12 132C22	132C32
g		123	139	156	176	194	218	258	
g_1	MFEMAXX	100	109	150	157	166	176	195	
	MFEMABR	107	118	132	137	147	158	187	
k_1	MFEMAXX	187	207	224.5	274	324	319	403	
k_2		120		145	180		222	265	
Δ k	MFEMABR	40	52	73	68	76	90	109.5	
	MFFMAXX	128				109	102	115	
	MFFMABR	170	165	183	181	170	183	201.5	
		k							
	GKS04	399	419	441					
	GKS05	419	439	461	521				
	GKS06	475	495	517	577	627			
	GKS07			573	633	683	684	776	
	GKS09				704	754	755	847	
	GKS11					845	846	938	
	GKS14						945	1037	

	a	h[1)]	h_1	k_8	o	p[1)]	q
GKS04	20	100	71	38.5	203	171	91
GKS05	23	125	80	40	232	205	103.5
GKS06	28	150	100	49	291	250	121.5
GKS07	34	190	120	65.5	354	310	155.5
GKS09	41	236	150	69.5	429	386	180.5
GKS11	54	300	185	70.5	527	485	205.5
GKS14	67	375	230	71.5	636	605	235.5

	d	d_1	l	l_1	u	t	i_2	o_1[1)]	a_2	b_2	c_2	e_2	f_2	s_2
	H7				JS9	+0,2				j7				
GKS04	25 30	45 45	115 115	100 100	8 8	28.3 33.3	33.5 33.5	148.5 148.5	160	110	10	130	3.5	4 x 9
GKS05	30 35	50 50	140 140	124 124	8 10	33.3 38.3	33 33	173.5 173.5	200	130	12	165	4	4 x 11
GKS06	40 45	65 65	160 160	140 140	12 14	43.3 48.8	42 41	201.5 201.5	200 250	180 130	12 15	165 215	3.5 4	4 x 11 4 x 14
GKS07	50 55	75 75	200 200	175 175	14 16	53.8 59.3	55 55	255.5 255.5	250 300	180 230	15 17	215 265	4 4	4 x 14 4 x 14
GKS09	60 70	95 95	240 240	210 210	18 20	64.4 74.9	60 60	300.5 300.5	350	250	18	300	4	4 x 17.5
GKS11	70 80	108 108	290 290	250 250	20 22	74.9 85.4	60 60	350.5 350.5	400 450	300 350	20 22	350 400	5 5	4 x 17.5 8 x 17.5
GKS14	100	135	350	305	28	106.4	60	410.5	450	350	22	400	5	8 x 17.5

[1)] k_2 !

Dimensions

GKS□□-3M V□R

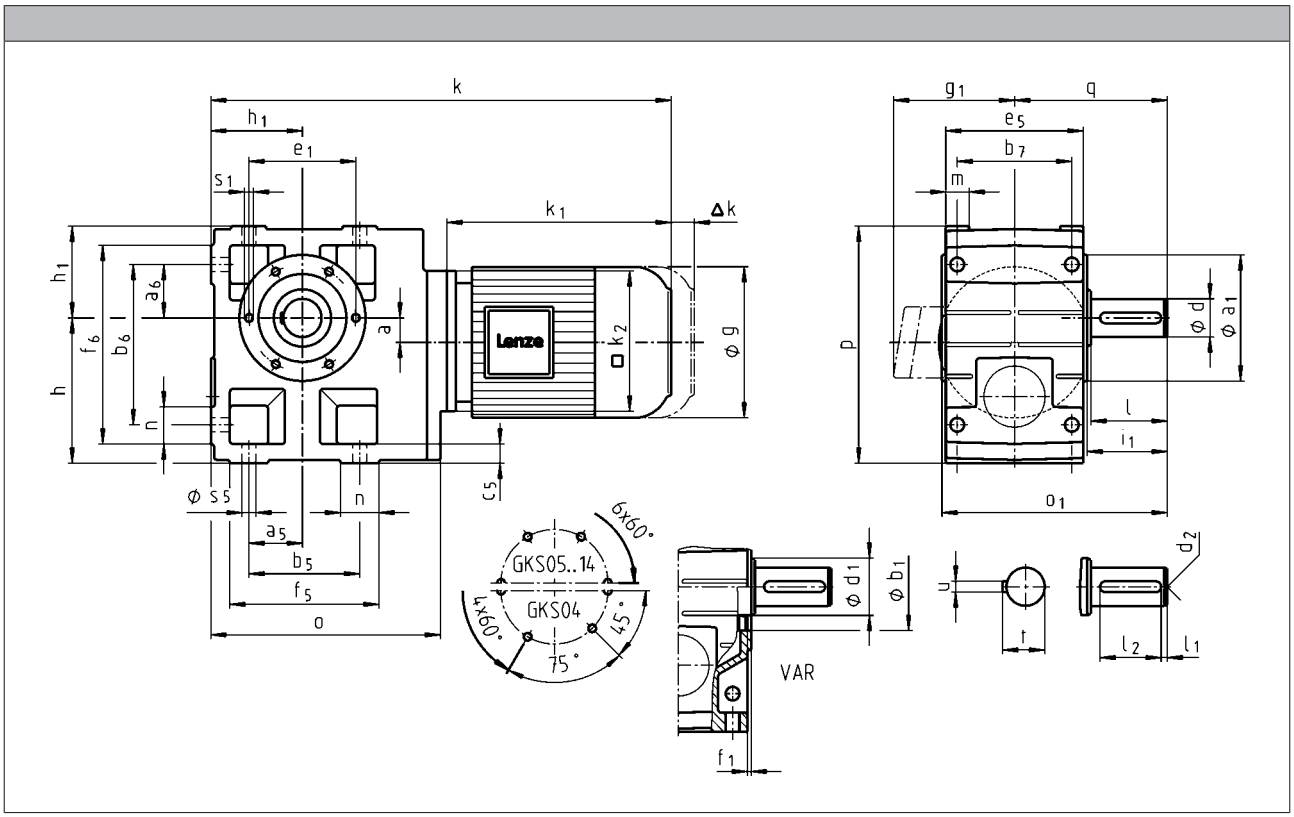



		063C32 063C42	071C32 071C42	080C32 080C42	090C32	100C12 100C32	112C22	132C12 132C22	132C32
g		123	139	156	176	194	218	258	
g_1	MFEMAXX	100	109	150	157	166	176	195	
	MFEMABR	107	118	132	137	147	158	187	
k_1	MFEMAXX	187	207	224.5	274	324	319	403	
k_2		120		145	180		222	265	
Δ k	MFEMABR	40	52	73	68	76	90	109.5	
	MFFMAXX	128				109	102	115	
	MFFMABR	170	165	183	181	170	183	201.5	
		k							
GKS04		399	419	441					
GKS05		419	439	461	521				
GKS06		475	495	517	577	627			
GKS07				573	633	683	684	776	
GKS09					704	754	755	847	
GKS11						845	846	938	
GKS14							945	1037	

	a	h[1)]	h_1	o	p[1)]	q
GKS04	20	100	71	203	171	107.5
GKS05	23	125	80	232	205	130
GKS06	28	150	100	291	250	160
GKS07	34	190	120	354	310	200
GKS09	41	236	150	429	386	240
GKS11	54	300	185	527	485	305
GKS14	67	375	230	636	605	375

	d	d	d_1	d_2	l	l_1	l_2	u	t	i_1	o_1[1)]	a_1	b_1	e_1	f_1	s_1
	k6	m6											H7			
GKS04	25		45	M10	50	6	40	8	28	52.5	162.5	104	75	90	3	M6x12
GKS05	30		45	M10	60	6	45	8	33	64	196.5	118	80	100	4	M8x15
GKS06	40		65	M16	80	7	63	12	43	85	235.5	140	100	120	4	M10x16
GKS07	50		75	M16	100	8	80	14	53.5	105	295.5	165	115	140	5	M12x18
GKS09		60	95	M20	120	8	100	18	64	125	355.5	205	145	175	6	M16x24
GKS11		80	108	M20	160	15	125	22	85	166	444.5	240	170	205	4	M20x32
GKS14		100	135	M24	200	18	160	28	106	207	543.5	290	170	250	6	M24x35

	a_5	a_6	b_5	b_6	b_7	c_5	e_5	f_5	f_6	m	n	s_5
GKS04	45	45	110	119	85	14	105	132	141	21	22	9
GKS05	47.5	47.5	115	140	105	17	115	144	169	21	29	11
GKS06	60	60	155	170	120	20	145	191	206	23	36	14
GKS07	70	70	190	210	150	25	180	235	255	28	45	18
GKS09	90	90	240	266	185	30	222	300	326	37	60	22
GKS11	105	105	290	325	225	40	270	363	398	43	73	26
GKS14	135	135	360	415	275	50	328	442	497	52	82	33

[1)] k_2 !



Dimensions

GKS□□-3M VAK

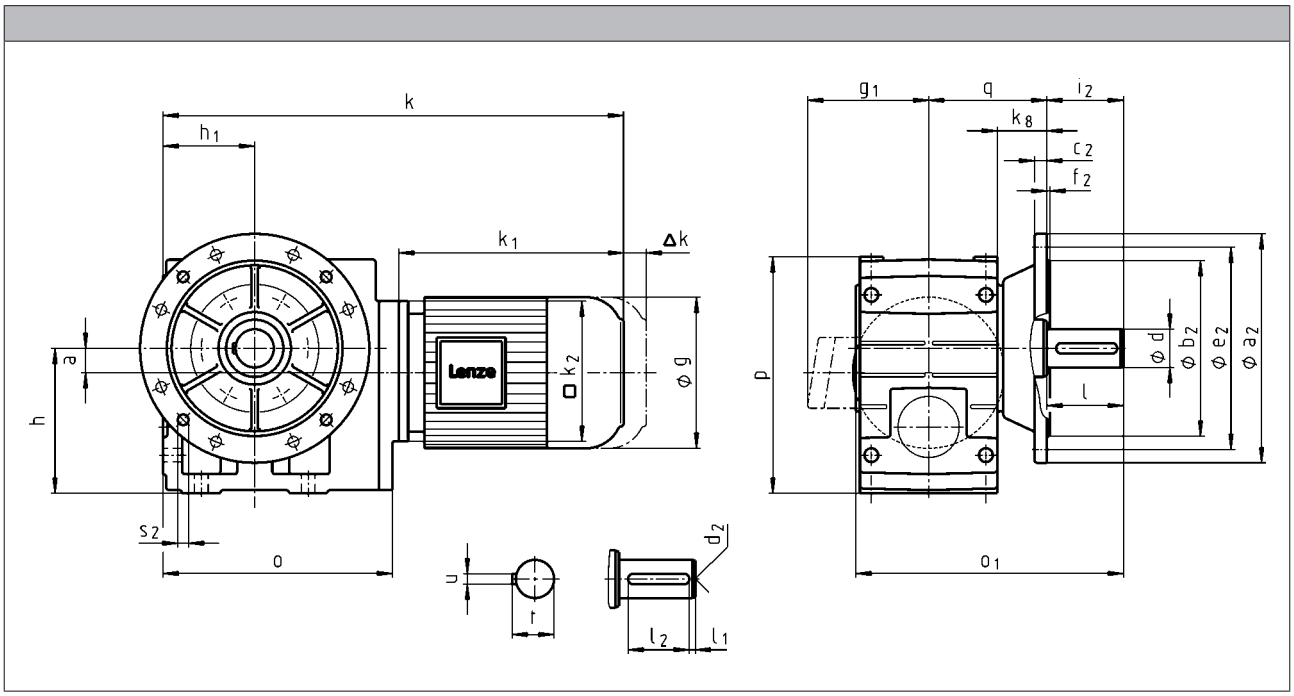



		063C32 063C42	071C32 071C42	080C32 080C42	090C32	100C12 100C32	112C22	132C12 132C22	132C32
g		123	139	156	176	194	218	258	
g_1	MFEMAXX	100	109	150	157	166	176	195	
	MFEMABR	107	118	132	137	147	158	187	
k_1	MFEMAXX	187	207	224.5	274	324	319	403	
k_2		120		145	180		222	265	
Δ k	MFEMABR	40	52	73	68	76	90	109.5	
	MFFMAXX	128				109	102	115	
	MFFMABR	170	165	183	181	170	183	201.5	
		k							
GKS04		399	419	441					
GKS05		419	439	461	521				
GKS06		475	495	517	577	627			
GKS07				573	633	683	684	776	
GKS09					704	754	755	847	
GKS11						845	846	938	
GKS14							945	1037	

	a	h[1)]	h_1	k_8	o	p[1)]	q
GKS04	20	100	71	38.5	203	171	91
GKS05	23	125	80	40	232	205	103.5
GKS06	28	150	100	49	291	250	121.5
GKS07	34	190	120	65.5	354	310	155.5
GKS09	41	236	150	69.5	429	386	180.5
GKS11	54	300	185	70.5	527	485	205.5
GKS14	67	375	230	71.5	636	605	235.5

	d	d	d_2	l	l_1	l_2	u	t	i_2	o_1[1)]	a_2	b_2	c_2	e_2	f_2	s_2
	k6	m6										j7				
GKS04	25		M10	50	6	40	8	28	50	195.5	160	110	10	130	3.5	4 x 9
GKS05	30		M10	60	6	45	8	33	60	229.5	200	130	12	165	4	4 x 11
GKS06	40		M16	80	7	63	12	43	80	276.5	250	180	15	215	4	4 x 14
GKS07	50		M16	100	8	80	14	53.5	100	350.5	250 300	180 230	15 17	215 265	4 4	4 x 14 4 x 14
GKS09		60	M20	120	8	100	18	64	120	415.5	350	250	18	300	4	4 x 17.5
GKS11		80	M20	160	15	125	22	85	160	504.5	400 450	300 350	20 22	350 400	5 5	4 x 17.5 8 x 17.5
GKS14		100	M24	200	18	160	28	106	200	603.5	450	350	22	400	5	8 x 17.5

[1)] k_2 !



Dimensions

GKS□□-4M H□R

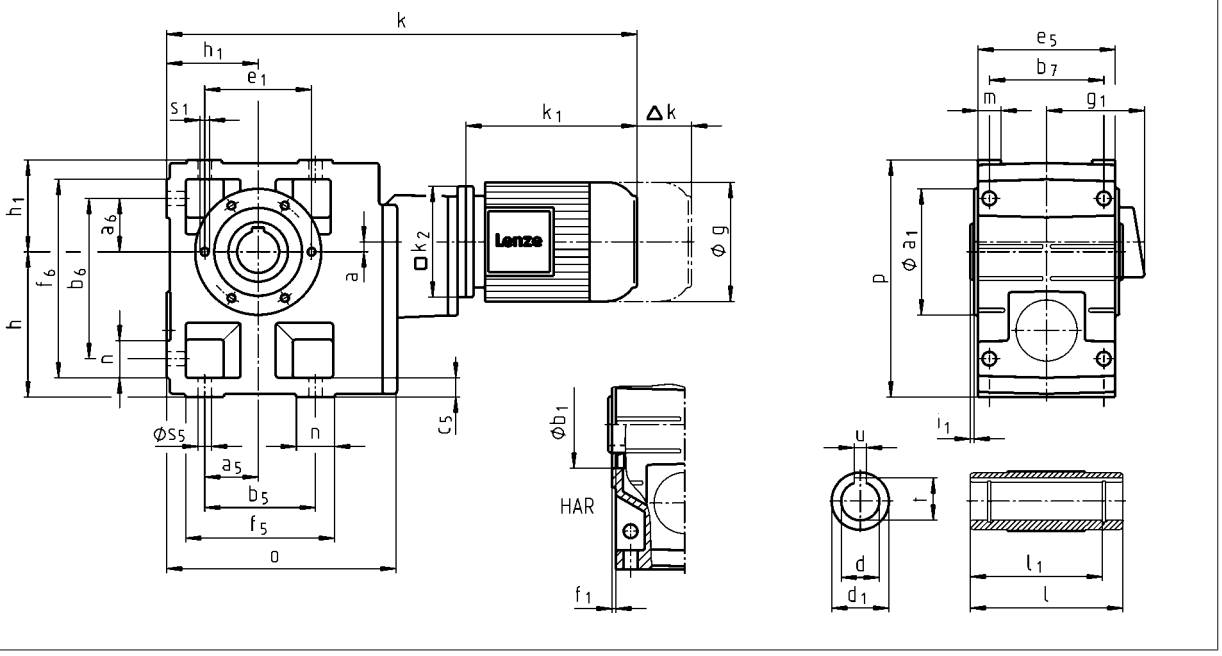

		063C32 063C42	071C32 071C42	080C32	080C42
g		123	139	156	
g_1	MFEMAXX	100	109	150	
	MFEMABR	107	118	132	
k_1	MFEMAXX	187	207	224.5	
k_2		120		145	
Δ k	MFEMABR	40	52	73	
	MFFMAXX	128			
	MFFMABR	170	165	183	
		k			
GKS05		495			
GKS06		568	588	611	
GKS07		635	655	678	
GKS09		724	744	767	
GKS11				877	



		090C32	100C12 100C32	112C22	132C12 132C22	132C32
g		176	194	218	258	
g_1	MFEMAXX	157	166	176	195	
	MFEMABR	137	147	158	187	
k_1	MFEMAXX	274	324	319	403	
k_2		180		222	265	
Δ k	MFEMABR	68	76	90	109.5	
	MFFMAXX	128	109	102	115	
	MFFMABR	181	170	183	201.5	
		k				
	GKS07	737				
	GKS09	826	876	877		
	GKS11	936	986	987	1079	
	GKS14	1069	1119	1120	1212	

	a	h	h_1	o	p
GKS05	13	125	80	226	205
GKS06	8	150	100	288	250
GKS07	11	190	120	350.5	310
GKS09	15	236	150	426	386
GKS11	16	300	185	523	485
GKS14	22	375	230	632	605

	d	d_1	l	l_1	u	t	i_1	a_1	b_1	e_1	f_1	s_1
	H7				JS9	+0,2			H7			
GKS05	30 35	50 50	140 140	124 124	8 10	33.3 38.3	4 4	118	80	100	4	M8x15
GKS06	40 45	65 65	160 160	140 140	12 14	43.3 48.8	5 5	140	100	120	4	M10x16
GKS07	50 55	75 75	200 200	175 175	14 16	53.8 59.3	5 5	165	115	140	5	M12x18
GKS09	60 70	95 95	240 240	210 210	18 20	64.4 74.9	5 5	205	145	175	6	M16x24
GKS11	70 80	108 108	290 290	250 250	20 22	74.9 85.4	6 6	240	170	205	4	M20x32
GKS14	100	135	350	305	28	106.4	7	290	170	250	6	M24x35

	a_5	a_6	b_5	b_6	b_7	c_5	e_5	f_5	f_6	m	n	s_5
GKS05	47.5	47.5	115	140	105	17	115	144	169	21	29	11
GKS06	60	60	155	170	120	20	145	191	206	23	36	14
GKS07	70	70	190	210	150	25	180	235	255	28	45	18
GKS09	90	90	240	266	185	30	222	300	326	37	60	22
GKS11	105	105	290	325	225	40	270	363	398	43	73	26
GKS14	135	135	360	415	275	50	328	442	497	52	82	33



Dimensions

GKS□□-4M HAK

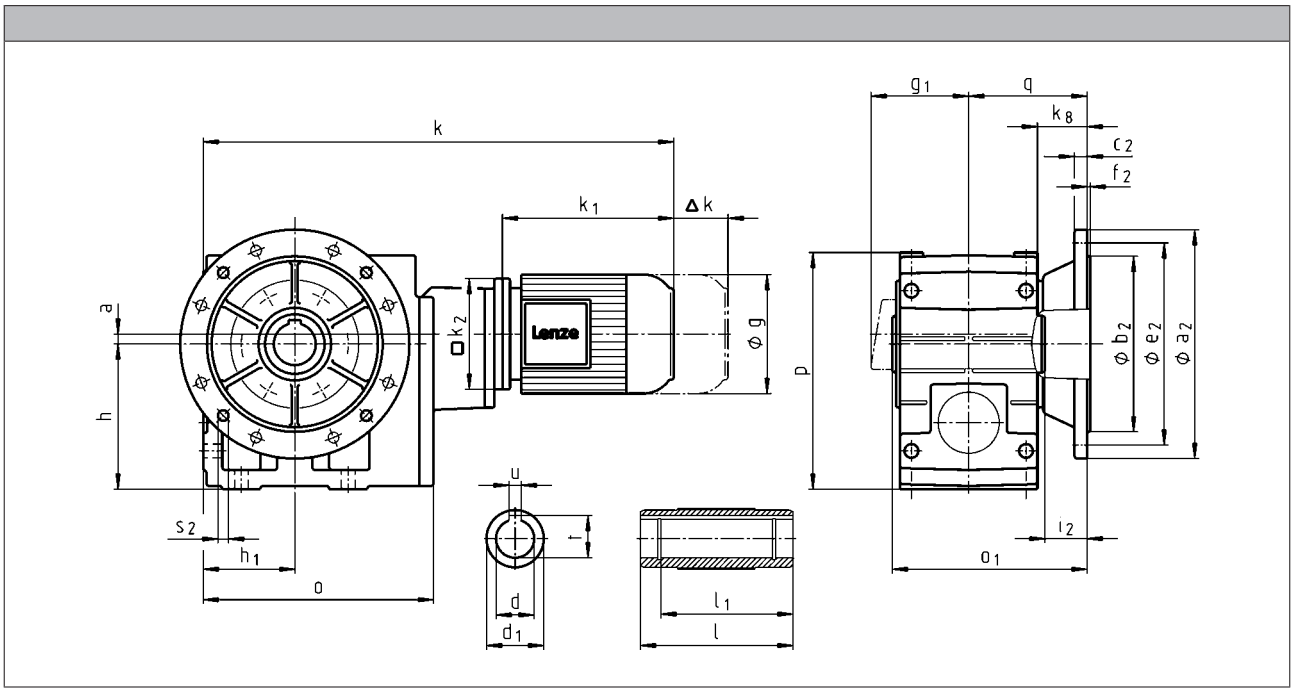

		063C32 063C42	071C32 071C42	080C32	080C42
g		123	139	156	
g_1	MFEMAXX	100	109	150	
	MFEMABR	107	118	132	
k_1	MFEMAXX	187	207	224.5	
k_2		120		145	
Δ k	MFEMABR	40	52	73	
	MFFMAXX	128			
	MFFMABR	170	165	183	
		k			
	GKS05	495			
	GKS06	568	588	611	
	GKS07	635	655	678	
	GKS09	724	744	767	
	GKS11			877	



		090C32	100C12 100C32	112C22	132C12 132C22	132C32
g		176	194	218	258	
g_1	MFEMAXX	157	166	176	195	
	MFEMABR	137	147	158	187	
k_1	MFEMAXX	274	324	319	403	
k_2		180		222	265	
Δ k	MFEMABR	68	76	90	109.5	
	MFFMAXX	128	109	102	115	
	MFFMABR	181	170	183	201.5	
		k				
	GKS07	737				
	GKS09	826	876	877		
	GKS11	936	986	987	1079	
	GKS14	1069	1119	1120	1212	

	a	h	h_1	k_8	o	p	q
GKS05	13	125	80	40	226	205	103.5
GKS06	8	150	100	49	288	250	121.5
GKS07	11	190	120	65.5	350.5	310	155.5
GKS09	15	236	150	69.5	426	386	180.5
GKS11	16	300	185	70.5	523	485	205.5
GKS14	22	375	230	71.5	632	605	235.5

	d	d_1	l	l_1	u	t	i_2	o_1	a_2	b_2	c_2	e_2	f_2	s_2
	H7				JS9	+0,2				j7				
GKS05	30 35	50 50	140 140	124 124	8 10	33.3 38.3	33 33	173.5 173.5	200	130	12	165	4	4 x 11
GKS06	40 45	65 65	160 160	140 140	12 14	43.3 48.8	42 41	201.5 201.5	200 250	180 130	12 15	165 215	3.5 4	4 x 11 4 x 14
GKS07	50 55	75 75	200 200	175 175	14 16	53.8 59.3	55 55	255.5 255.5	250 300	180 230	15 17	215 265	4 4	4 x 14 4 x 14
GKS09	60 70	95 95	240 240	210 210	18 20	64.4 74.9	60 60	300.5 300.5	350	250	18	300	4	4 x 17.5
GKS11	70 80	108 108	290 290	250 250	20 22	74.9 85.4	60 60	350.5 350.5	400 450	300 350	20 22	350 400	5 5	4 x 17.5 8 x 17.5
GKS14	100	135	350	305	28	106.4	60	410.5	450	350	22	400	5	8 x 17.5



Dimensions

GKS□□-4M V□R

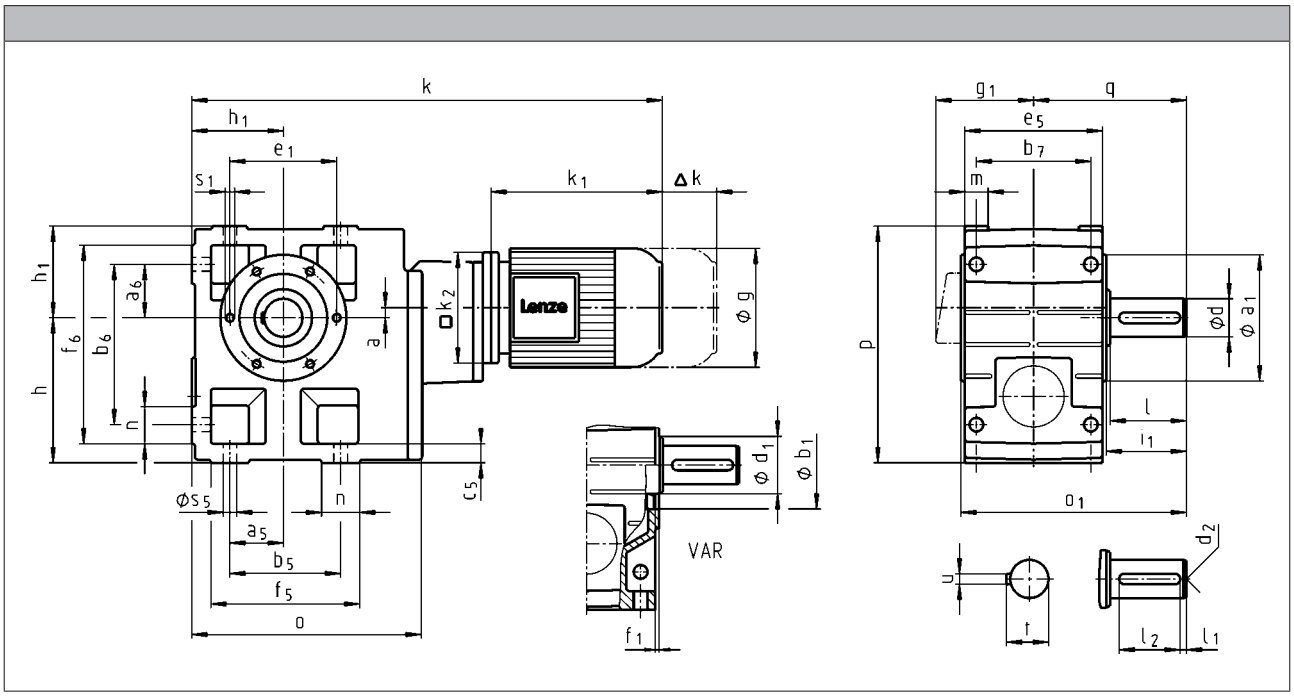

		063C32 063C42	071C32 071C42	080C32	080C42
g		123	139	156	
g_1	MFEMAXX	100	109	150	
	MFEMABR	107	118	132	
k_1	MFEMAXX	187	207	224.5	
k_2		120		145	
Δ k	MFEMABR	40	52	73	
	MFFMAXX	128			
	MFFMABR	170	165	183	
		k			
	GKS05	495			
	GKS06	568	588	611	
	GKS07	635	655	678	
	GKS09	724	744	767	
	GKS11			877	



		090C32	100C12 100C32	112C22	132C12 132C22	132C32
g		176	194	218	258	
g_1	MFEMAXX	157	166	176	195	
	MFEMABR	137	147	158	187	
k_1	MFEMAXX	274	324	319	403	
k_2		180		222	265	
Δ k	MFEMABR	68	76	90	109.5	
	MFFMAXX	128	109	102	115	
	MFFMABR	181	170	183	201.5	
		k				
	GKS07	737				
	GKS09	826	876	877		
	GKS11	936	986	987	1079	
	GKS14	1069	1119	1120	1212	

	a	h	h_1	o	p	q
GKS05	13	125	80	226	205	130
GKS06	8	150	100	288	250	160
GKS07	11	190	120	350.5	310	200
GKS09	15	236	150	426	386	240
GKS11	16	300	185	523	485	305
GKS14	22	375	230	632	605	375

	d	d	d_1	d_2	l	l_1	l_2	u	t	i_1	o_1	a_1	b_1	e_1	f_1	s_1
	k6	m6											H7			
GKS05	30		45	M10	60	6	45	8	33	64	196.5	118	80	100	4	M8x15
GKS06	40		65	M16	80	7	63	12	43	85	235.5	140	100	120	4	M10x16
GKS07	50		75	M16	100	8	80	14	53.5	105	295.5	165	115	140	5	M12x18
GKS09		60	95	M20	120	8	100	18	64	125	355.5	205	145	175	6	M16x24
GKS11		80	108	M20	160	15	125	22	85	166	444.5	240	170	205	4	M20x32
GKS14		100	135	M24	200	18	160	28	106	207	543.5	290	170	250	6	M24x35

	a_5	a_6	b_5	b_6	b_7	c_5	e_5	f_5	f_6	m	n	s_5
GKS05	47.5	47.5	115	140	105	17	115	144	169	21	29	11
GKS06	60	60	155	170	120	20	145	191	206	23	36	14
GKS07	70	70	190	210	150	25	180	235	255	28	45	18
GKS09	90	90	240	266	185	30	222	300	326	37	60	22
GKS11	105	105	290	325	225	40	270	363	398	43	73	26
GKS14	135	135	360	415	275	50	328	442	497	52	82	33



Dimensions

GKS□□-4M VAK

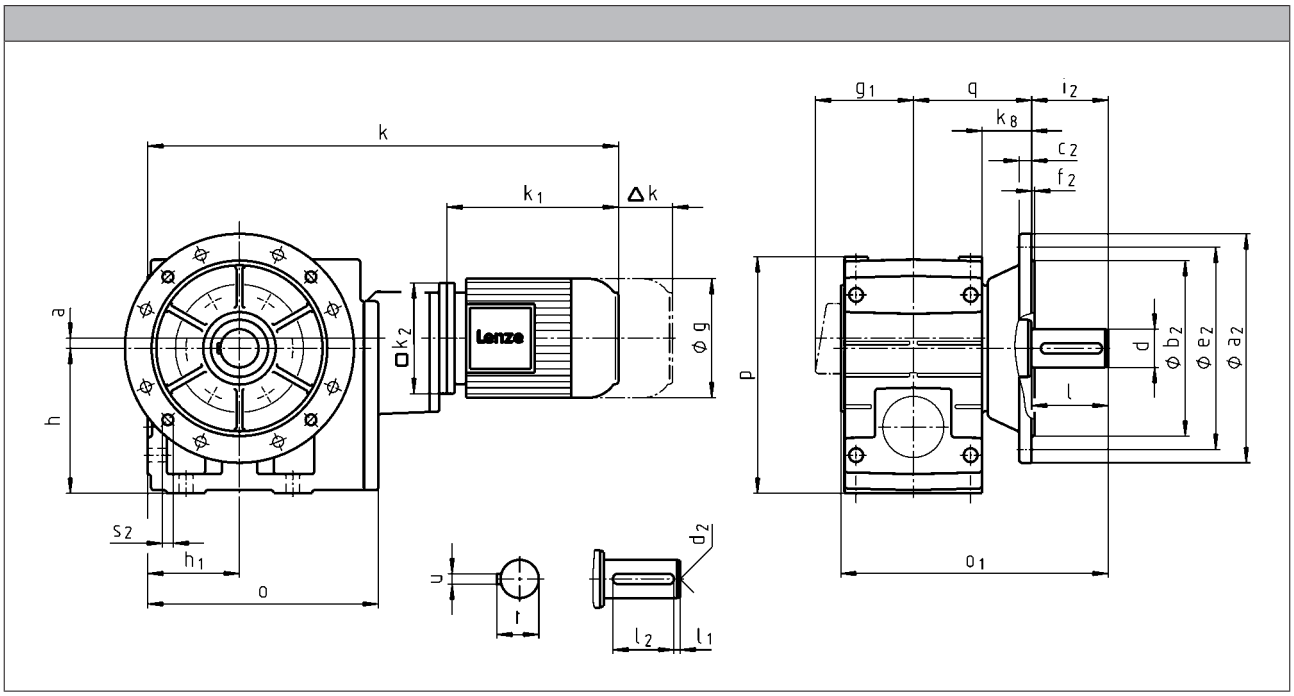

		063C32 063C42	071C32 071C42	080C32	080C42
g		123	139	156	
g_1	MFEMAXX	100	109	150	
	MFEMABR	107	118	132	
k_1	MFEMAXX	187	207	224.5	
k_2		120		145	
Δ k	MFEMABR	40	52	73	
	MFFMAXX	128			
	MFFMABR	170	165	183	
		k			
	GKS05	495			
	GKS06	568	588	611	
	GKS07	635	655	678	
	GKS09	724	744	767	
	GKS11			877	



		090C32	100C12 100C32	112C22	132C12 132C22	132C32
g		176	194	218	258	
g_1	MFEMAXX	157	166	176	195	
	MFEMABR	137	147	158	187	
k_1	MFEMAXX	274	324	319	403	
k_2		180		222	265	
Δ k	MFEMABR	68	76	90	109.5	
	MFFMAXX	128	109	102	115	
	MFFMABR	181	170	183	201.5	
		k				
	GKS07	737				
	GKS09	826	876	877		
	GKS11	936	986	987	1079	
	GKS14	1069	1119	1120	1212	

	a	h	h_1	k_8	o	p	q
GKS05	13	125	80	40	226	205	103.5
GKS06	8	150	100	49	288	250	121.5
GKS07	11	190	120	65.5	350.5	310	155.5
GKS09	15	236	150	69.5	426	386	180.5
GKS11	16	300	185	70.5	523	485	205.5
GKS14	22	375	230	71.5	632	605	235.5

	d	d	d_2	l	l_1	l_2	u	t	i_2	o_1	a_2	b_2	c_2	e_2	f_2	s_2
	k6	m6										j7				
GKS05	30		M10	60	6	45	8	33	60	229.5	200	130	12	165	4	4 x 11
GKS06	40		M16	80	7	63	12	43	80	276.5	250	180	15	215	4	4 x 14
GKS07	50		M16	100	8	80	14	53.5	100	350.5	250 300	180 230	15 17	215 265	4 4	4 x 14 4 x 14
GKS09		60	M20	120	8	100	18	64	120	415.5	350	250	18	300	4	4 x 17.5
GKS11		80	M20	160	15	125	22	85	160	504.5	400 450	300 350	20 22	350 400	5 5	4 x 17.5 8 x 17.5
GKS14		100	M24	200	18	160	28	106	200	603.5	450	350	22	400	5	8 x 17.5





Hollow shaft with shrink disc

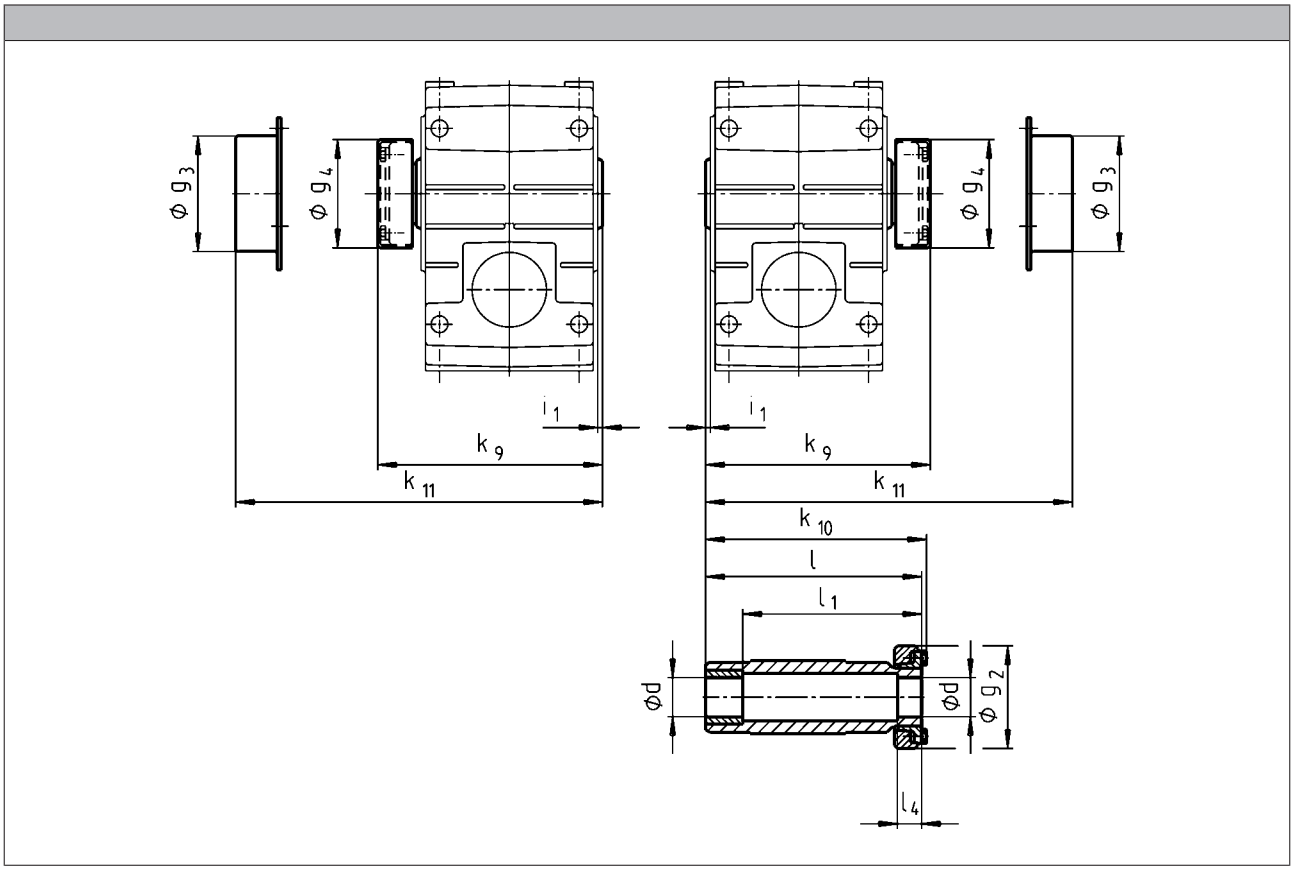

	d	g_2	g_3	g_4	i_1	k_9	k_{10}	k_{11}	l	l_1	l_4
	h6										
GKS04	25 30	72	79	76	2.5	150	148	154	142	122	26
GKS05	35	80	90	84	4.0	176	174	179	168	148	28
GKS06	40	90	100	94	5.0	202	200	204	194	164	30
GKS07	50	110	124	116		241	238	244	232	192	26
GKS09	65	141	159	147		288	285	287	278	228	30
GKS11	80	170	191	176	6.0	347	344	349	338	238	42
GKS14	100	215	253	221	7.0	418	415	421	407	307	55

► Output flange and hollow shaft with shrink disc (output version SAK) are not possible in the same location. For additional dimensions see output version H□□.

► Ensure that the strength of the machine shaft material is adequate in shrink disc designs.
When using typical steels, e.g. C45, 42CrMo4, the torques listed in the selection tables can be used without restriction.
Please consult us if you wish to use material that is considerably weaker. Medium surface roughness Rz must not exceed 15 µm (turning is sufficient).



Mounting set for hollow shaft circlip:
Proposed design for auxiliary tools

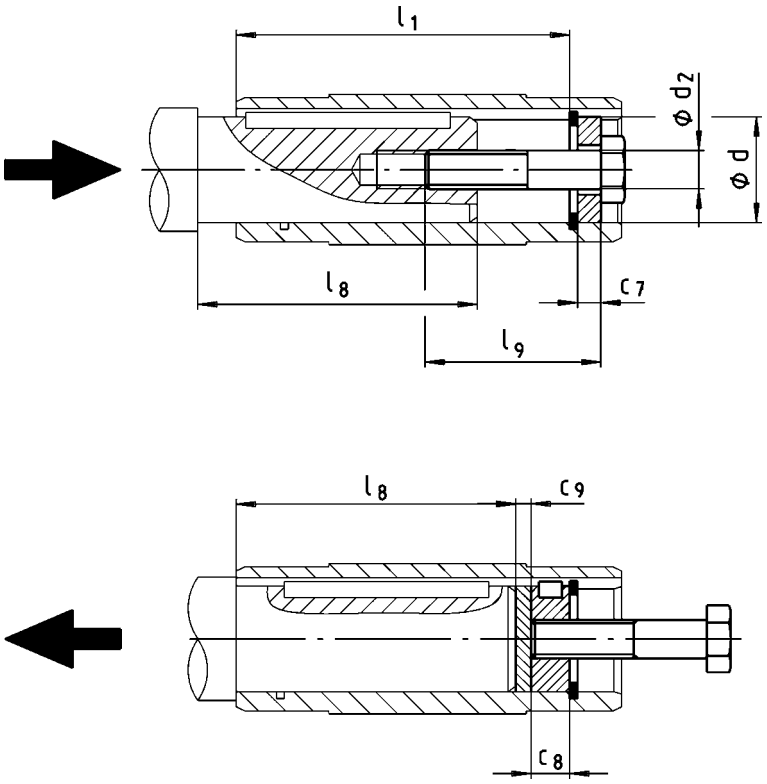

	d	l_1	d_2	l_9	c_7	c_8	c_9	$l_{8,\,max}$
	H7							
GKS04	25 30	100	M10	40	5	10	3	85
					6			
GKS05	30 35	124						107
			M12	50	7	12		
GKS06	40 45	140	M16	60	8	16	4	118
					9			
GKS07	50 55	175			10		5	148
			M20	80	11	20		
GKS09	60 70	210			13			182
					14			
GKS11	70 80	250					6	221
					16			
GKS14	100	305	M24	100	20	24	8	270

6.9



Hoseproof hollow shaft cover

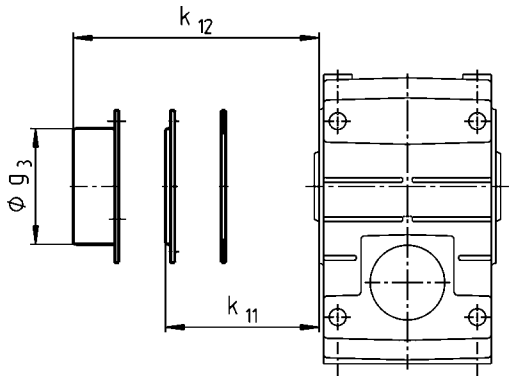

► Cover including gasket

	k_{11}	k_{12}	g_3
GKS04	9		
GKS05	10		
GKS06	11		
GKS07			
GKS09		54	159
GKS11		67	191
GKS14		80	253



Gearboxes with 2nd output shaft end

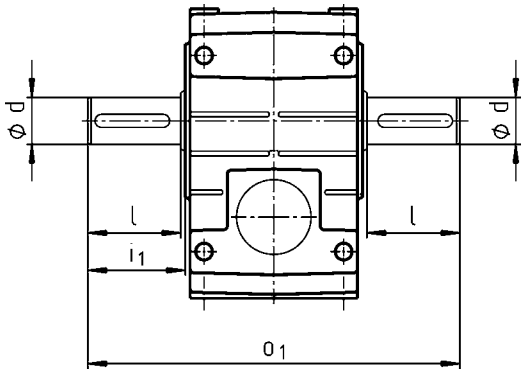

	d	d	l	i_1	o_1
	k6	m6			
GKS04	25		50	52.5	215
GKS05	30		60	64.0	260
GKS06	40		80	85.0	320
GKS07	50		100	105.0	400
GKS09		60	120	125.0	480
GKS11		80	160	166.0	610
GKS14		100	200	207.0	750



Torque plate on threaded pitch circle

In position 3

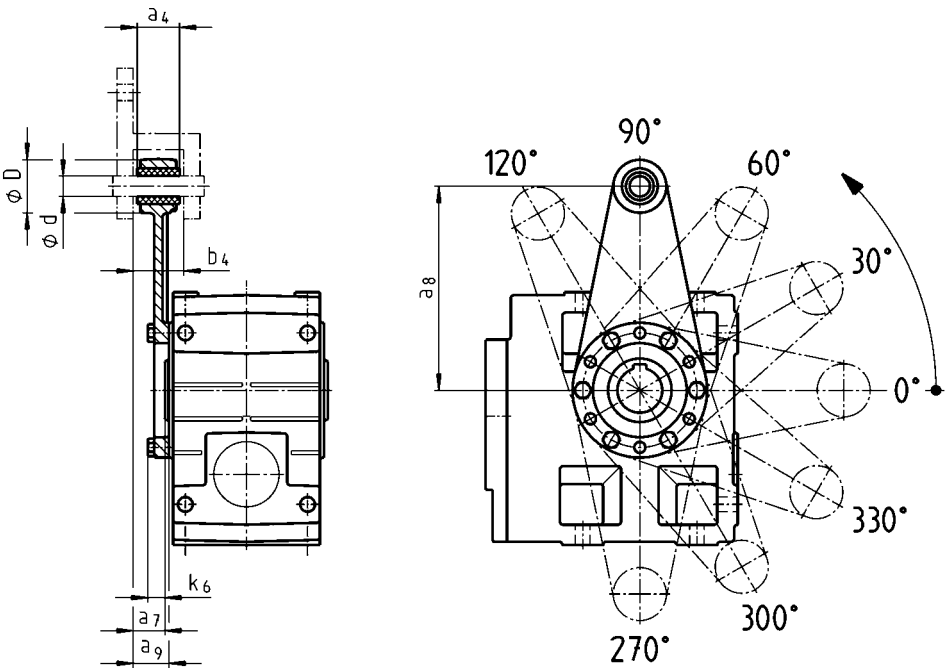

In position 5

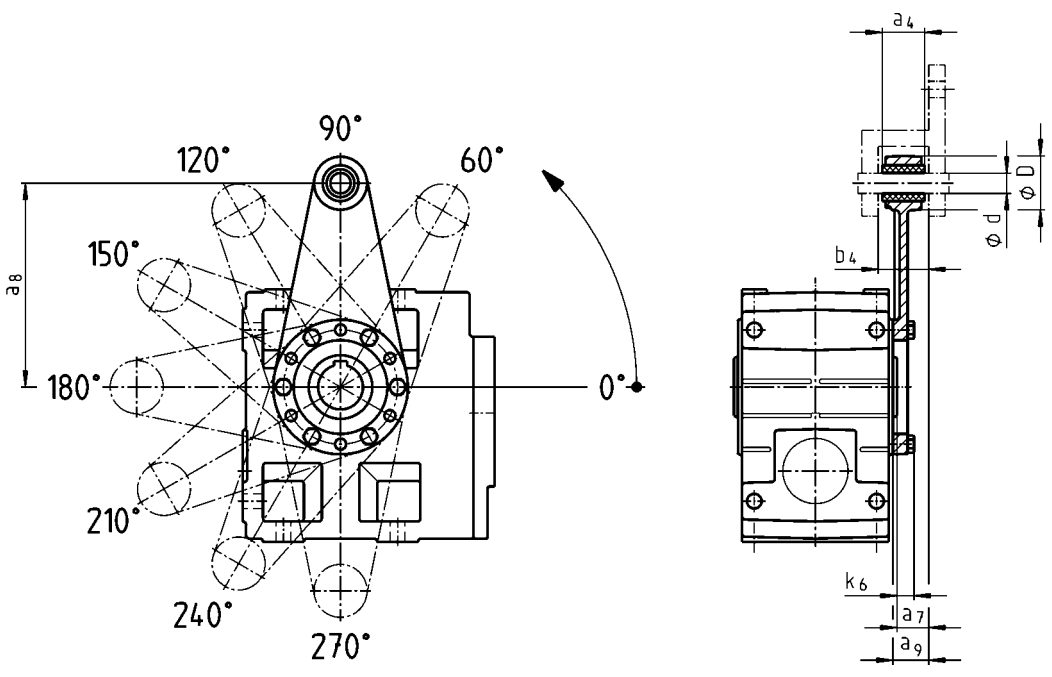

	a_4	a_7	a_8	a_9	b_4	d	D	k_6
GKS04	30	24.0	130	26.5	34.5	12	35	16
GKS05	34	23.5	160	27.5	38.5	16	45	15
GKS06	40	28.0	200	33.0	44.5	20	50	18
GKS07	46	32.5	250	37.5	50.5	25	65	21



Torque plate at housing foot

In position 2, 4 or 6

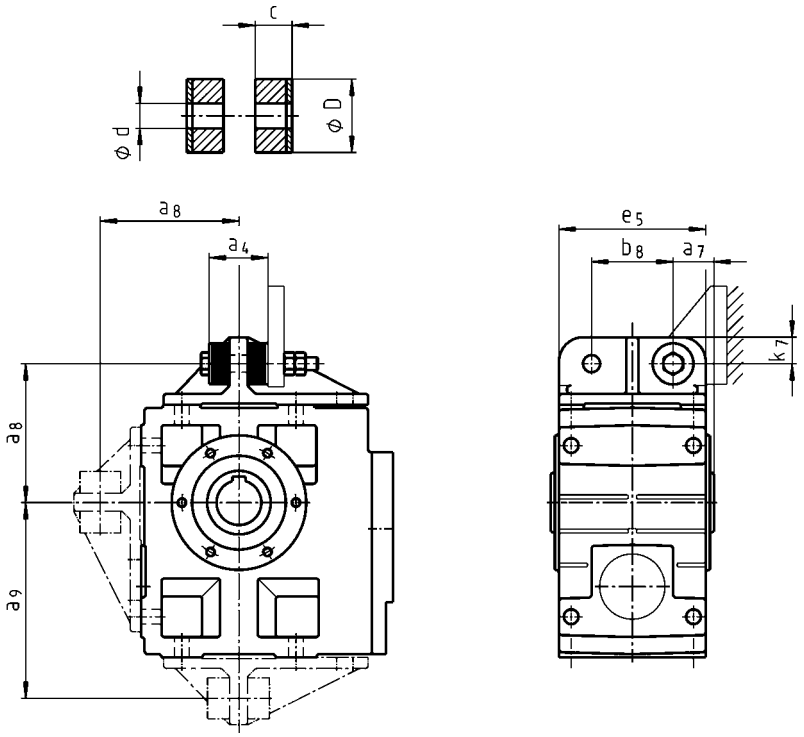

	a_4	a_7	a_8	a_9	b_8	c	d	D	e_5	k_7
GKS04	41	27.5	106	135.0	60	14.5	11	30	100	20
GKS05	45	35.0	115	160.0	70	15.0	13	40	127	25
GKS06	72	40.0	145	195.0	80	27.0	17	50	145	28
GKS07	78	50.0	170	240.0	100	28.0	21	60	180	35
GKS09	86	60.0	214	300.0	120	29.0	26	72	222	46
GKS11	94	72.5	260	375.0	145	30.0	31	92	270	55
GKS14	100	85.0	320	465.0	180		39	110	328	70

Ventilations

Position of ventilation, sealing elements and oil level check

GKS05...14-3

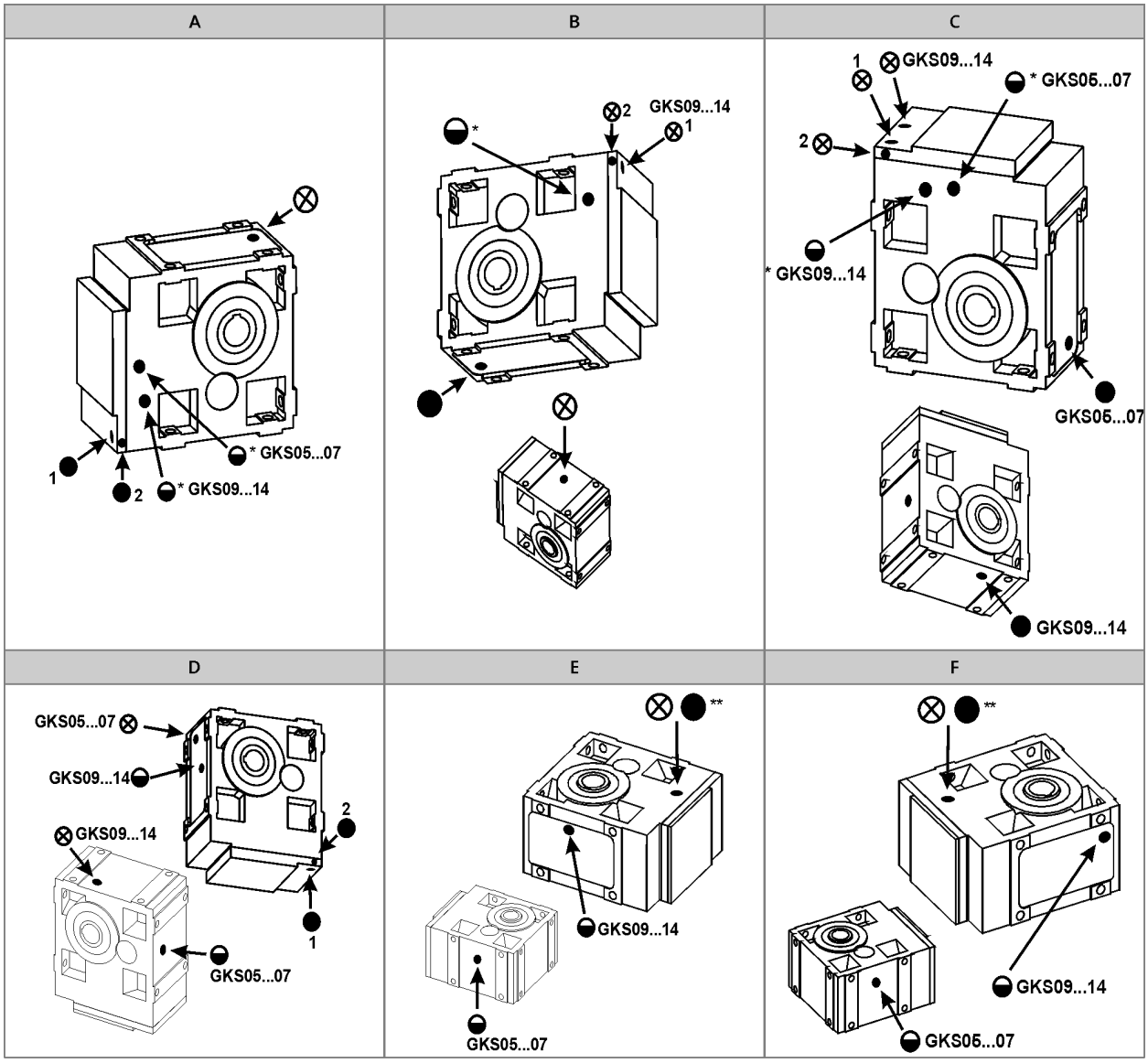

A to F Mounting position
⊗ Ventilation / Oil filler plug
● Oil drain plug
◒ Oil control plug
* On both sides
** On opposite side

Item 1 standard
Item 2 only with:
- GKS05-3M □□□ 090C□□
- GKS05-3M □□□ 100C□□
- GKS06-3M □□□ 112C□□
- GKS07-3M □□□ 160C□□

6.9



Ventilations

Position of ventilation, sealing elements and oil level check

GKS05...14-4

A	B	C
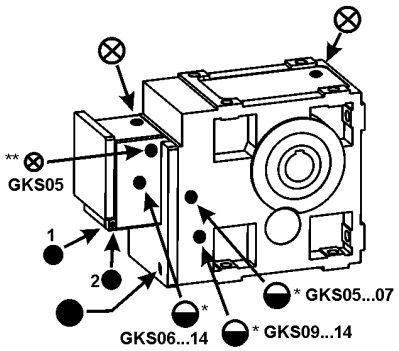	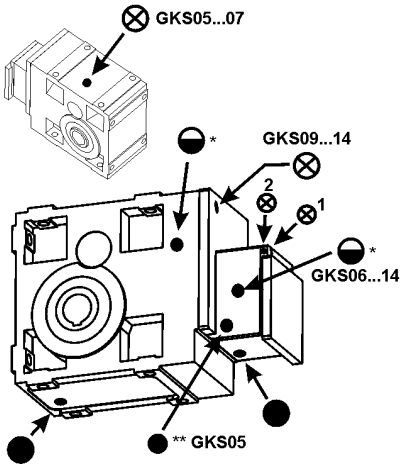	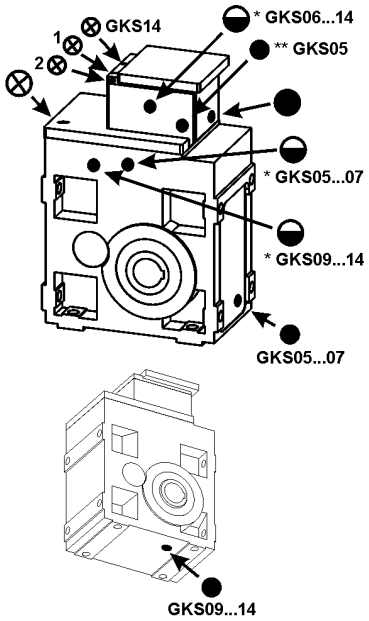
D	**E**	**F**
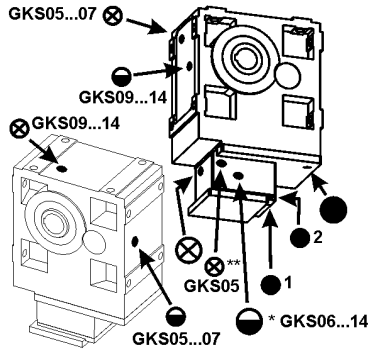	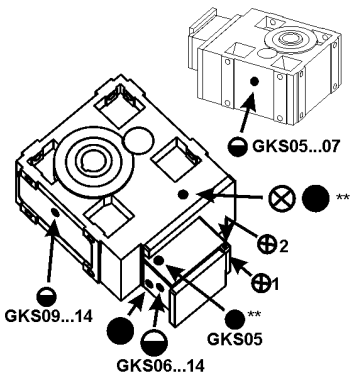	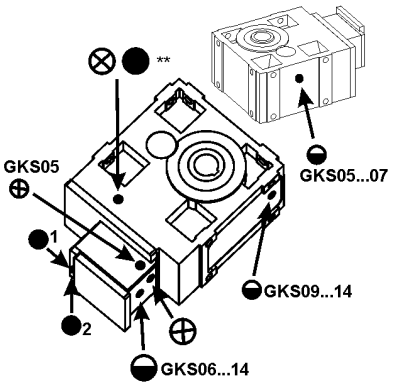

A to F Mounting position
⊗ Ventilation / Oil filler plug
● Oil drain plug
◒ Oil control plug
* On both sides
** On opposite side

Item 1 standard
Item 2 only with:
- GKS07-4M □□□ 090C□□
- GKS07-4M □□□ 100C□□
- GKS09-4M □□□ 112C□□



Ventilations

Compensation reservoir for mounting position C

GKS□□-3

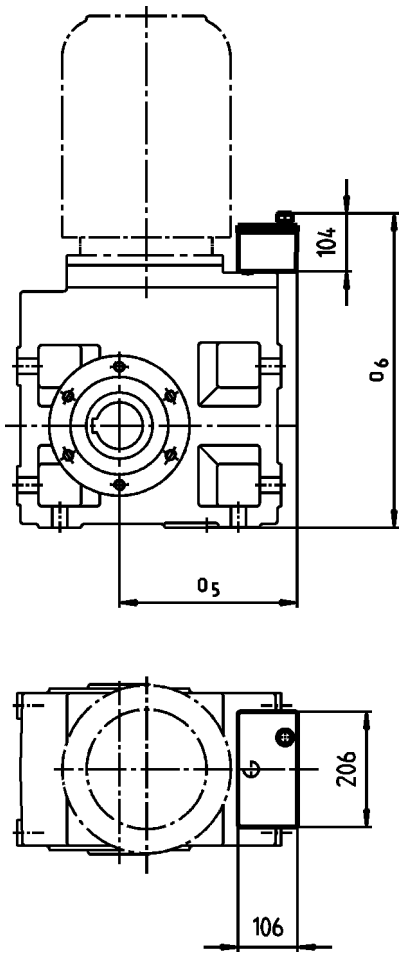

Motor	090 100		112		132		160 180 225	
	o_5	o_6	o_5	o_6	o_5	o_6	o_5	o_6
	[mm]	[mm]	[mm]	[mm]	[mm]	[mm]	[mm]	[mm]
GKS09	243	533	265	533	282	533	297	533
GKS11	258	626	280	630	304	630	318	630
GKS14			313	739	343	739	343	739

► Terminal box position 4 not permitted.



GSS helical-worm gearboxes

0.55 … 15 kW

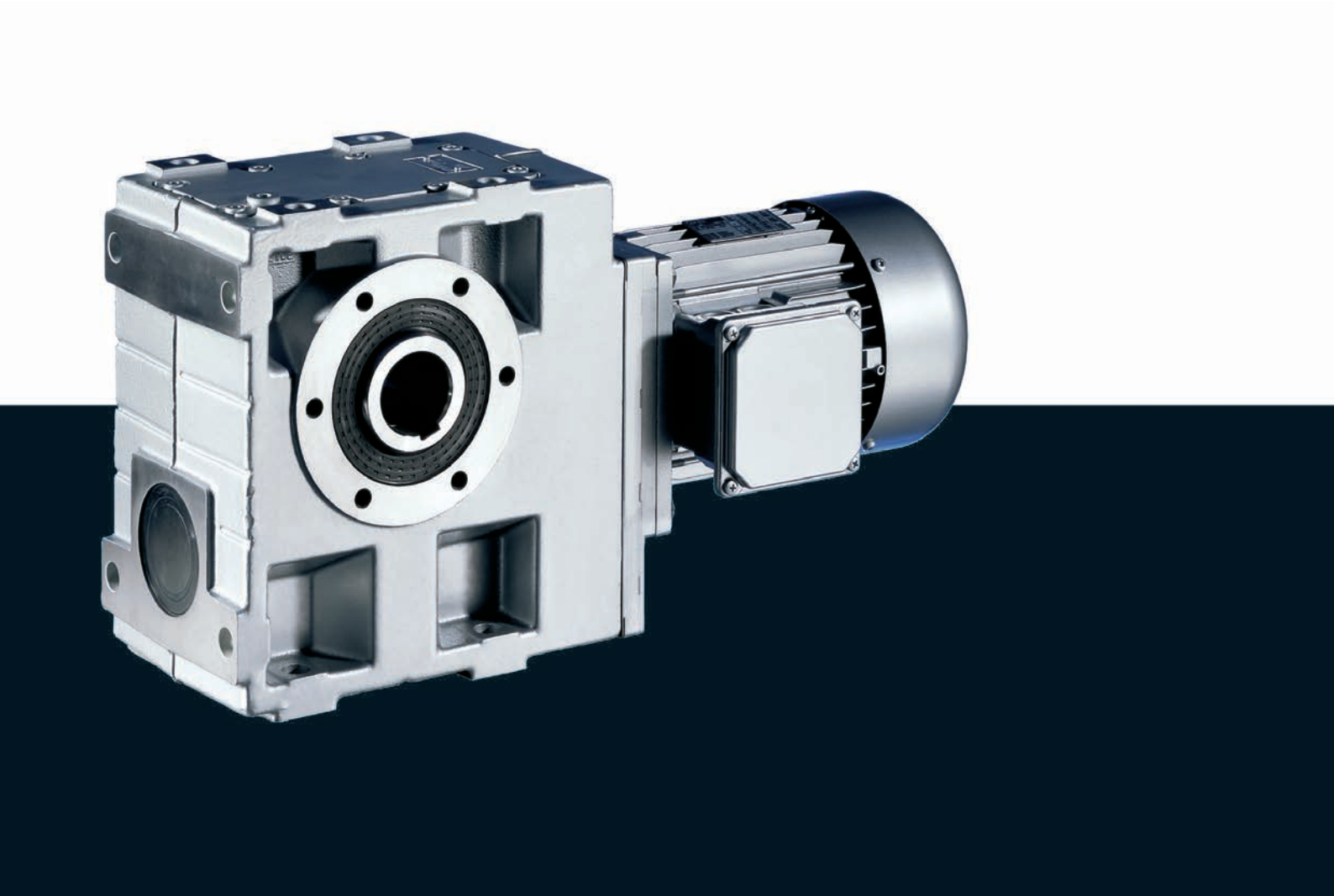

GSS helical-worm gearboxes



Contents

General information	List of abbreviations	6.10 - 4
	Product key	6.10 - 5
	Product information	6.10 - 7
	Functions and features	6.10 - 8
	Dimensioning	6.10 - 13
	Notes on ordering	6.10 - 18
	Ordering details checklist	6.10 - 19
Technical data	Permissible radial and axial forces at output	6.10 - 23
	Moments of inertia	6.10 - 26
	Efficiencies	6.10 - 30
	Weights	6.10 - 37
	Selection tables	6.10 - 43
	Dimensions	6.10 - 62
Accessories	Hollow shaft with shrink disc	6.10 - 79
	Mounting set for hollow shaft circlip: Proposed design for auxiliary tools	6.10 - 80
	Hoseproof hollow shaft cover	6.10 - 81
	Gearboxes with 2nd output shaft end	6.10 - 81
	Torque plate on threaded pitch circle	6.10 - 82
	Torque plate at housing foot	6.10 - 83
	Ventilations	6.10 - 84



List of abbreviations

$\eta_{c=1}$		Efficiency
c		Load capacity
f_N	[Hz]	Rated frequency
$F_{ax,max}$	[N]	Max. axial force
$F_{rad,max}$	[N]	Max. radial force
H_{max}	[m]	Site altitude
i		Ratio
J	[kgcm²]	Moment of inertia
m	[kg]	Mass
M_2	[Nm]	Output torque
n_2	[r/min]	Output speed
n_N	[r/min]	Rated speed
P_N	[kW]	Rated power
$S_{hü}$	[1/h]	Transition operating frequency
$T_{opr,max}$	[°C]	Max. ambient operating temperature
$T_{opr,min}$	[°C]	Min. ambient operating temperature
$U_{N,\Delta}$	[V]	Rated voltage
$U_{N,Y}$	[V]	Rated voltage

CE	Communauté Européenne
CSA	Canadian Standards Association
DIN	Deutsches Institut für Normung e.V.
EMC	Electromagnetic compatibility
EN	European standard
IEC	International Electrotechnical Commission
IM	International Mounting Code
IP	International Protection Code
NEMA	National Electrical Manufacturers Association
UL	Underwriters Laboratory Listed Product
UR	Underwriters Laboratory Recognized Product
VDE	Verband deutscher Elektrotechniker (Association of German Electrical Engineers)
CCC	China Compulsory Certificate
GOST	Certificate for Russian Federation
cURus	Combined certification marks of UL for the USA and Canada
UkrSEPRO	Certificate for Ukraine



Product key

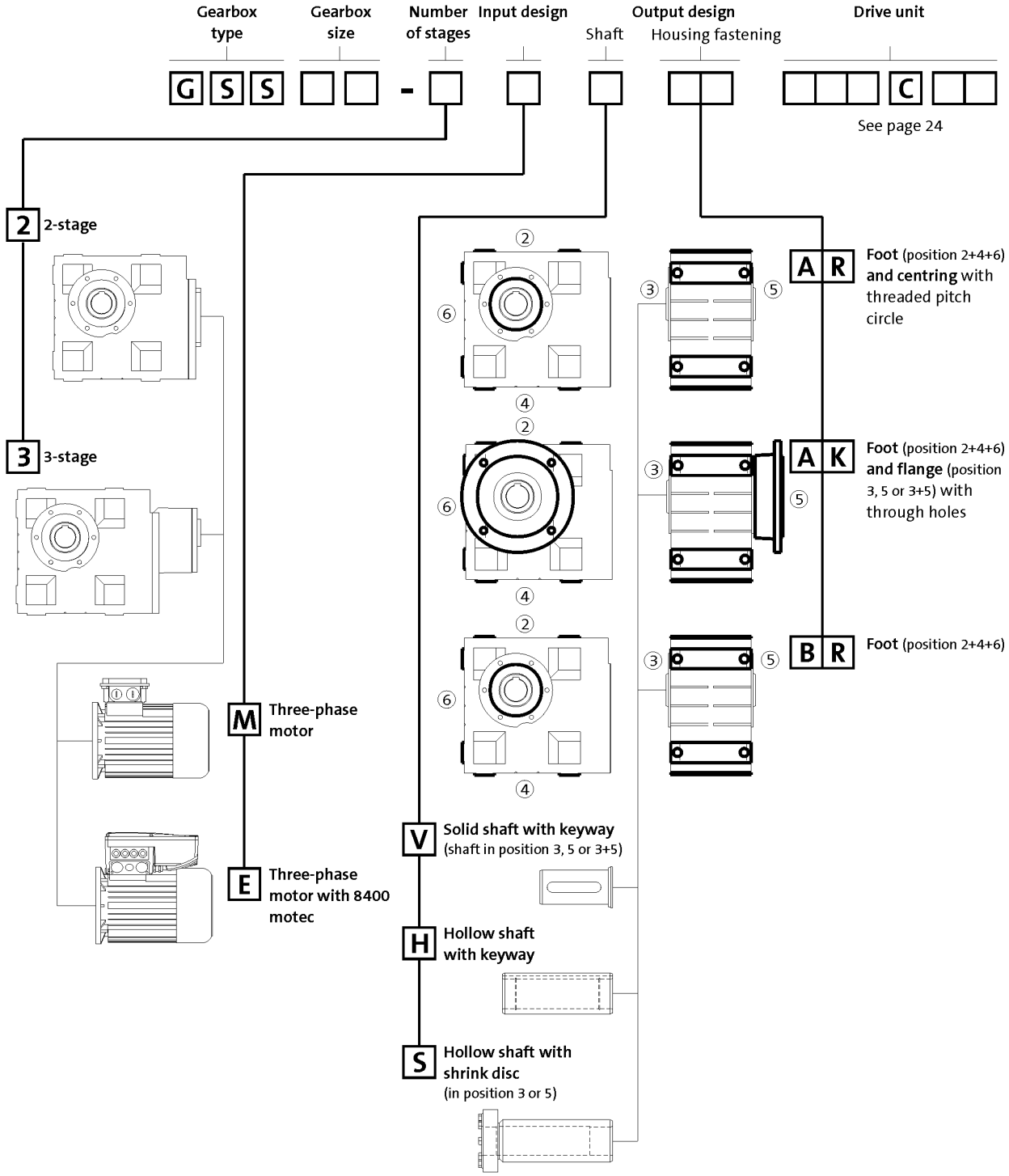

	Output design			
	V	H	S	K
	d x l [mm]	d [mm]	d [mm]	Øa2 [mm]
GSS04-2	25x50	25/30	25/30	160
GSS05-2/3	30x60	30/35	35	200
GSS06-2/3	40x80	40/45	40	200[1)]/250
GSS07-2/3	50x100	50/55	50	250/300

[1)] Only in the case of H and S type of output



Product key

Mounting position (A...F) and position of system blocks (1...6)

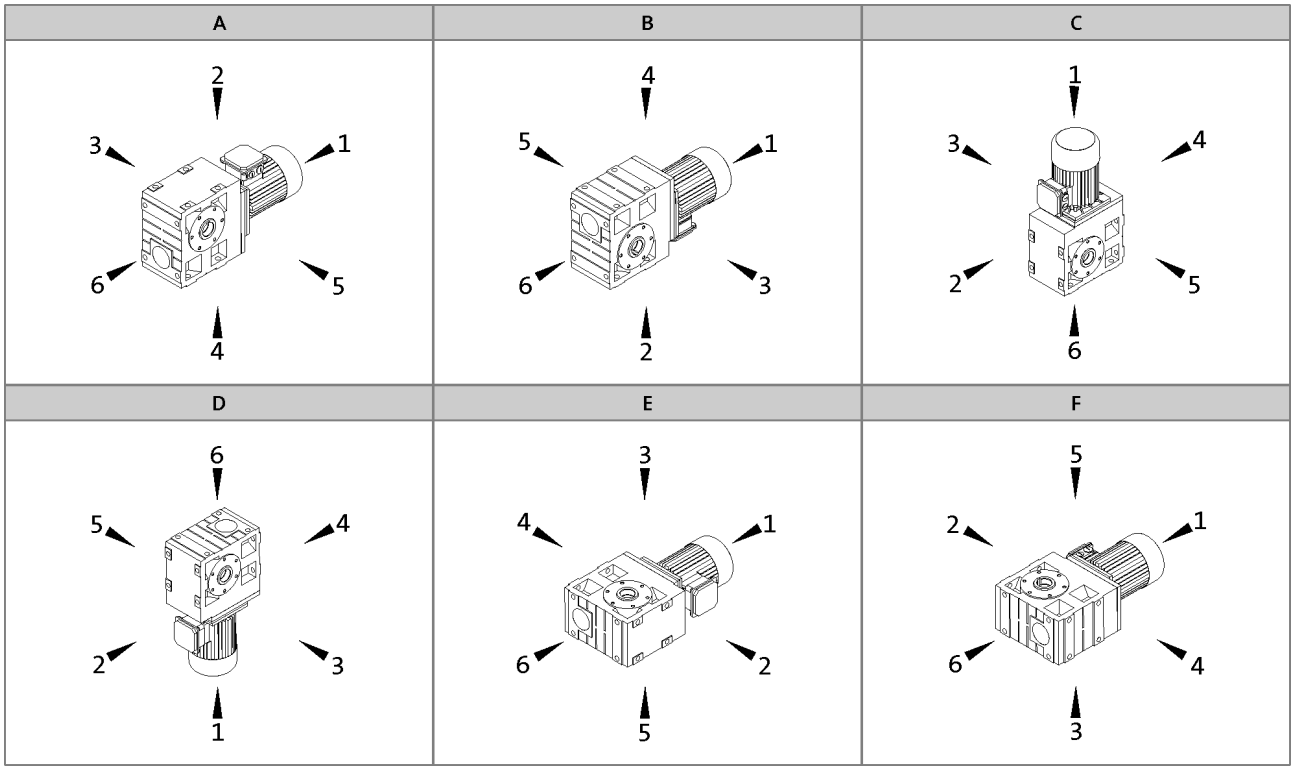

Hollow shaft: 0
Solid shaft: 3, 5, 8 (3+5)
Hollow shaft with shrink disc: 3, 5

Without flange: 0
Flange: 3, 5, 8 (3+5)
Terminal box / motec: 2, 3, 4, 5

Gearbox designs

Basic versions	
Motor efficiency	Standard efficiency Increased efficiency (IE2)
Surface and corrosion protection	OKS-G (primer: grey) OKS-S (paint: RAL 7012)
Lubricant	CLP PG 460 (synthetic)
Ventilation	Oil control plugs for GSS05 ... 07 Breather elements for GSS05 ... 07

Options	
Surface and corrosion protection	OKS-S (special paint according to RAL) OKS-M (special paint according to RAL) OKS-L (special paint according to RAL)
Lubricant	CLP HC 220 USDA H1 (synthetic)
Shaft sealing rings	Driven shaft: Viton
Accessories	Torque plate on threaded pitch circle Housing foot torque plate 2nd output shaft end Shrink disc cover Hoseproof hollow shaft cover Mounting set for hollow shaft circlip
Nameplate	Metal nameplate (supplied loose) Adhesive nameplate (supplied loose)



Product information

Lenze provides a geared motor construction kit, which covers a wide range of requirements. Numerous drive-side and output-side options enable precise adaptation of the drive to the specific application. This is the basis for versatile applications and functional scalability of our gearboxes and geared motors.
The modular concept and high power density make extremely compact sizes possible. Optimised teeth profiles and ground gears ensure low-noise operation and low backlash. The gearboxes are of compact and hence space-saving construction.

A low noise solution

Helical worm gearboxes are particularly low-noise drive components. They create a compact drive unit in combination with our servo motors. The helical worm gearboxes are designed in 2- and 3-stage versions and can reach a torque of up to 1,250 Nm and a ratio of up to i=1847.

Inverters for motor-proximity installation

The Drive Package with decentralised Inverter Drives 8400 motec covers a power range up to 7.5 kW.

Designs

- 2-stage and 3-stage gearboxes
- Hollow shaft with keyway or shrink disc
- Solid shaft with keyway
- Foot or flange mounting
- Torque plate, including rubber buffer
- With MF three-phase AC motors (inverter-optimised) power range 0.55 ... 15 kW

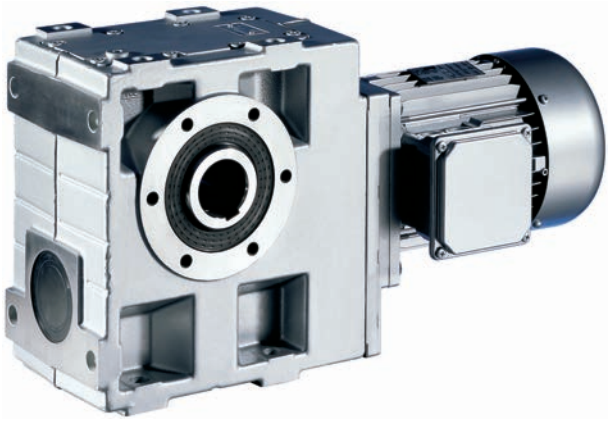

Helical-bevel geared motor GSS07-2M HBR 100-32



Functions and features

Gearbox type	GSS
Housing	
Design	Cuboid
Material	Aluminium / cast iron
Solid shaft	
Design	with keyway to DIN 6885
Tolerance	m6 (d > 50 mm) k6 (d ≤ 50 mm)
Material	Tempered steel C45 or 42CrMo4
Hollow shaft	
Design	H: with keyway S: smooth
Tolerance	Bore H7
Material	Tempered steel C45
Toothed parts	
Design	Optimised tooth flanks and profile geometry Ground tooth flanks
Material	Case-hardened steel, bronze (worm gear only)
Shaft-hub joint	1st stage/prestage/helical (bevel) gearbox: Friction-type connection Output stage (= 2nd, 3rd or 4th stage): Friction-type or positive-fit connection
Shaft sealing rings	
Design	With dust lip
Material	NB / FP
Bearing	
Design	Ball bearing / tapered-roller bearing depending on size and design
Lubricants	
Standard	DIN 51502
Quantities	corresponding to mounting position (see operating instructions)
Mechanical efficiency	
1-stage gearboxes [$\eta_{c=1}$]	
2-stage gearboxes [$\eta_{c=1}$]	0.62 ... 0.92 [1)]
3-stage gearboxes [$\eta_{c=1}$]	0.64 ... 0.92 [1)]
4-stage gearboxes [$\eta_{c=1}$]	
Notes	Dependent on transmission ratio Housing at operating temperature and teeth run in

[1)] 30 - Efficiencies depending on ratio



Functions and features

Lubricants

Lenze gearboxes and geared motors are ready for operation on delivery and are filled with lubricants specific to both the drive and the design. The mounting position and design specified in the order are key factors in choosing the volume of lubricant.

The lubricants listed in the lubricant table are approved for use in Lenze drives.

Lubricant table

Mode	CLP PG 460	CLP HC 220 USDA H1
Ambient temperature [°C]	-20 ... +40	
Specification	Synthetic-based oil (polyglycol)	Synthetic-based oil (synthetic hydrocarbon / poly-alpha-olefin oil)
Note	Cannot be mixed with other oil types.	For food processing industry
Changing interval	25000 operating hours not later than after three years (oil temperature 70...80 °C)	16000 operating hours not later than after three years (oil temperature 70...80 °C)
Fuchs		bremer & leguil Cassida Fluid GL 220
Klüber	Klübersynth GH 6-460	Klüberoil 4 UH1-220 N
Shell	Shell Tivela S 460	

- ► Please contact your Lenze office if you are operating at ambient temperatures in areas up to < -20 °C > or up to +40°C.
- ► Caution: when using the lubricant CLP HC 220 with the GSS helical-worm gearbox, the load capacity c is reduced to 80 % of the values stated in the catalogue.



Functions and features

Surface and corrosion protection

For optimum protection of geared motors against ambient conditions, the surface and corrosion protection system (OKS) offers tailor-made solutions.

Various surface coatings combined with other protective measures ensure that the geared motors operate reliably even at high air humidity, in outdoor installations or in the presence of atmospheric impurities. Any colour from the RAL Classic collection can be chosen for the top coat. The geared motors are also available unpainted (no surface and corrosion protection).

Surface and corrosion protection system	Applications	Measures
	Catalogue text	Catalogue text
OKS-G (primed)	• Dependent on subsequent top coat applied	• 1K priming coat (grey) • Zinc-coated screws • Rust-free breather elements Optional measures • Stainless steel nameplate
OKS-S (small)	• Standard applications • Internal installation in heated buildings • Air humidity up to 90%	• Surface coating as per corrosivity category C1 (in line with EN 12944-2) • Zinc-coated screws • Rust-free breather elements Optional measures • Stainless steel nameplate
OKS-M (medium)	• Internal installation in non-heated buildings • Covered, protected external installation • Air humidity up to 95%	• Surface coating as per corrosivity category C2 (in line with EN 12944-2) • Zinc-coated screws • Rust-free breather elements Optional measures • Stainless steel shaft • Stainless steel nameplate • Rust-free shrink disc (on request)
OKS-L (high)	• External installation • Air humidity above 95% • Chemical industry plants • Food industry	• Surface coating as per corrosivity category C3 (in line with EN 12944-2) • Blower cover and B end shield additionally primed • Cable glands with gaskets • Corrosion-resistant brake with cover ring, stainless friction plate, and chrome-plated armature plate (on request) • All screws/screw plugs zinc-coated • Stainless breather elements • Threaded holes that are not used are closed by means of plastic plugs Optional measures • Sealed recesses on motor (on request) • Stainless steel shaft • Stainless steel nameplate • Rust-free shrink disc (on request) • Additional priming coat on cast iron fan • Oil expansion tank and torque plates painted separately and supplied loose



Functions and features

Structure of surface coating

Surface and corrosion protection system	Corrosivity category	Surface coating	Colour
	DIN EN ISO 12944-2	Structure	
Without OKS (uncoated)		Dipping primed gearbox	
OKS-G (primed)		Dipping primed gearbox 1K priming coat	
OKS-S (small)	C1	Dipping primed gearbox 2K-PUR top coat	Standard: RAL 7012 Optional: RAL Classic
OKS-M (medium)	C2	Dipping primed gearbox 1K priming coat 2K-PUR top coat	Standard: RAL 7012 Optional: RAL Classic
OKS-L (high)	C3	Dipping primed gearbox 2K-EP priming coat 2K-PUR top coat	Standard: RAL 7012 Optional: RAL Classic



Functions and features

Ventilation

Gearboxes without ventilation
No ventilation is required for gearbox GSS04.

Gearboxes with ventilation
Gearboxes GSS05 ... 07 are supplied with breather elements as standard.



Dimensioning

General information about the data provided in this catalogue

Powers, torques and speeds
The powers, torques and speeds specified in this catalogue are rounded values and are valid under the following conditions:

- Operating time/day = 8 h (100% OT)
- Duty class I for up to 10 switching operations/h
- Mounting positions and designs in this catalogue
- Standard lubricant
- T_{amb} = 20 °C for gearboxes,
  T_{amb} = 40 °C for motors (in accordance with EN 60034)
- Site altitude < = 1000 m amsl
- The selection tables provide the permissible mechanical powers and torques. For notes on the thermal power limit, see chapter drive dimensioning.
- The rated power specified for motors and geared motors applies to operating mode S1 (in accordance with EN 60034).

Under different operating conditions, the values obtained may vary from those listed here.
In the case of extreme operating conditions, please consult your Lenze sales office.



Dimensioning

Thermal power limit

The thermal power limit, defined by the heat balance, limits the permissible gearbox continuous power. It may be less than the mechanical power ratings listed in the selection tables.

The thermal power limit is affected by:
- the churning losses in the lubricant. These are determined by the mounting position and the circumferential speed of the wheels
- the load and the speed
- the ambient conditions: temperature, air circulation, input or dissipation via shafts and the foundation

Please consult your Lenze subsidiary
- if the following input speeds n_1 are exceeded on a continuous basis (continuous is defined as more than 8 h/day):

Motor frame size	Mounting position A, B, E, F	Mounting position C, D
063 ... 100	3000 r/min	3000 r/min
112 ... 132	3000 r/min	1500 r/min
160 ... 225	2000 r/min	1500 r/min

- if the following input speeds n_1 are exceeded:

Motor frame size	Mounting position A, B, E, F	Mounting position C, D
063 ... 100	4000 r/min	3000 r/min
112 ... 132	4000 r/min	2000 r/min
160 ... 225	3000 r/min	1500 r/min

Possible ways of extending the application area

- synthetic lubricant (option)
- shaft sealing rings made from FP material/Viton (option)
- reduction in lubricant quantity
- cooling of the geared motor by means of air convection on the machine/system



Dimensioning

Load capacity and application factor

Load capacity c of gearbox
Rated value for the load capacity of Lenze geared motors.
- c is the ratio of the permissible rated torque of the gearbox to the rated torque supplied by the drive component (e.g. the built-in Lenze motor).
- The value of c must always be greater than the value of the application factor k calculated for the application.

Application factor k (according to DIN 3990)
Takes into account the influence of temporally variable loads which are actually present during the anticipated operating time of gearboxes and geared motors.
k is determined by:
- the type of load
- the load intensity
- temporal influences

Duty class	Load type
I	Smooth operation, small or light jolts
II	Uneven operation, average jolts
III	Uneven operation, severe jolts and/or alternating load

Application factor k

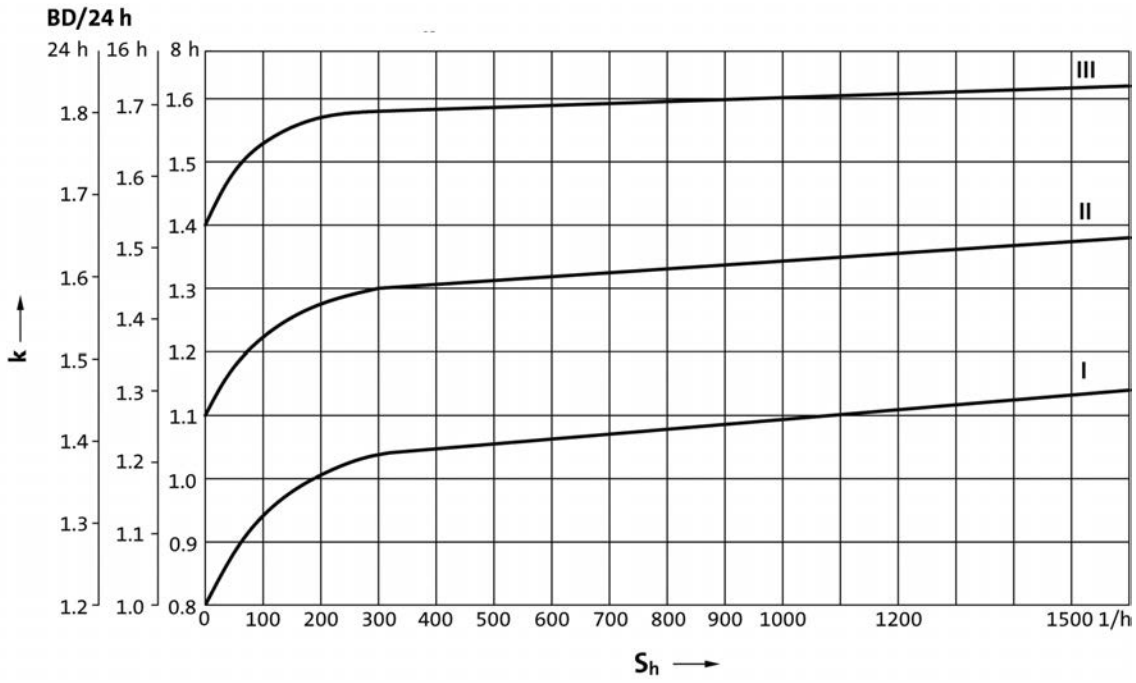



Dimensioning

Torque derating at low motor frequencies

Motor size-dependent torque reduction, taking into account the thermal response during operation on the inverter.

Torque characteristics

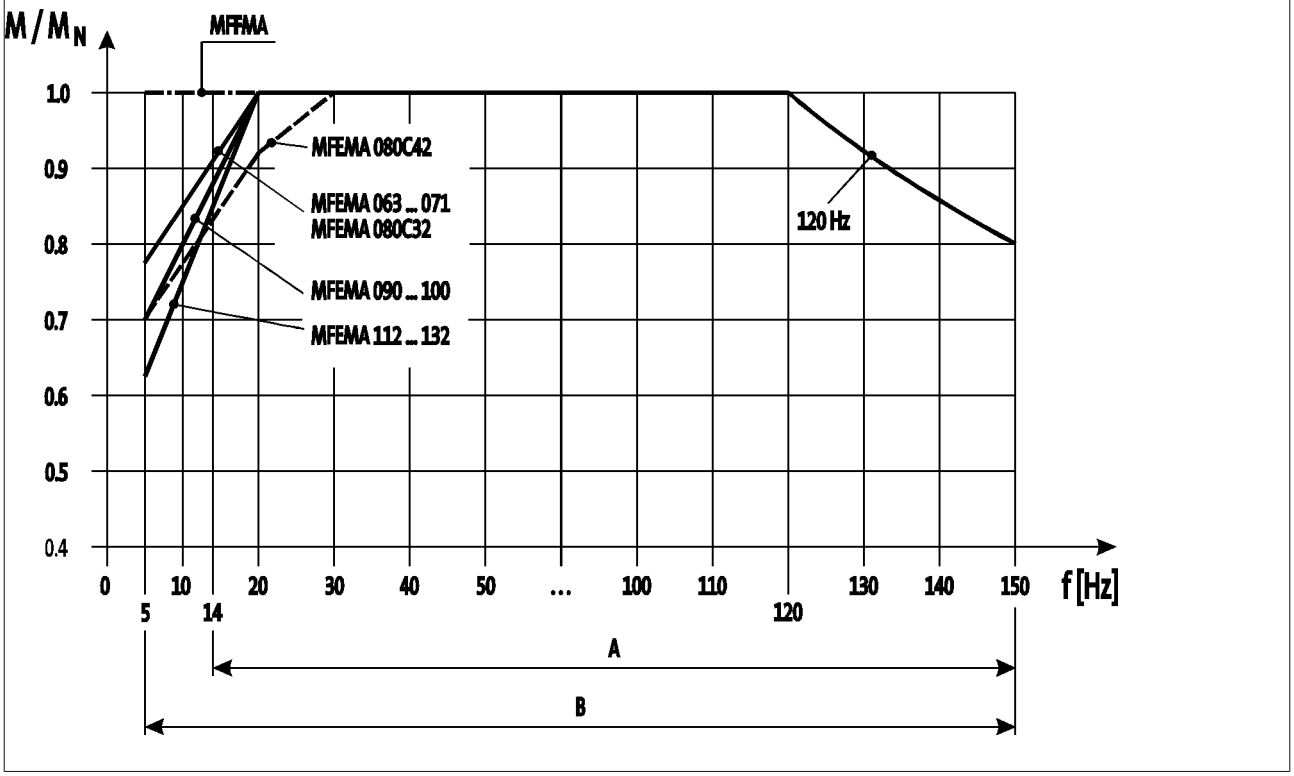

A = Operation with integral fan and brake
B = Operation with integral fan and brake control "Holding current reduction"

► The motor specifications stated in this catalogue for inverter operation apply to operation with a Lenze inverter. If you are uncertain, get in touch with the manufacturer of the inverter to ask whether the device is capable of driving the motor with the stated specifications (e.g. setting range, base frequency).

You can use the Drive Solution Designer for precise drive dimensioning.

The Drive Solution Designer helps you to carry out a fast and high-quality drive dimensioning.
The software includes well-founded and proven knowledge on drive applications and electro-mechanical drive components.

Please contact your Lenze sales office.



Dimensioning

Notes on the selection tables

The selection tables show the available combinations of gearbox type, number of stages, ratio and motor. The following legend indicates the structure of the selection tables.

Gearbox type

GST helical gearbox

Technical data



Rated power P_N of the drive motor in relation to the rated frequency

Selection tables

► 120 Hz: P_N = 0.55 kW

Speed setting range → n_{22}/n_2 = 1 ... 24.0

Speed range of the drive motor → n_1 = 143.3 ... 3440 r/min

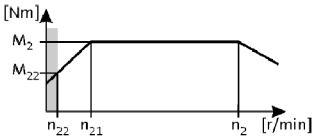

n_{22} [r/min]	n_{21} [r/min]		n_2 [r/min]	M_{22} [Nm]	M_2 [Nm]	c	i			
70	293	-	1680	2.3	3.0	4.5	2.048	GST04-1M□□□063C32	E84AV□□□5514□□0	79
64	268	-	1536	2.6	3.0	3.9	2.240	GST05-1M□□□063C32	E84AV□□□5514□□0	79

Product key of geared motor

Product key of inverter

Speed and torque information

Ratio i

Page number for dimensions

Speed and torque information

The speed and torque information applies to self-ventilated and forced-ventilated drives. Externally cooled drives can always output the torque M_2 in all the setting ranges. In the case of self-ventilated drives, a reduction to M_{22} is necessary in the lower speed range.

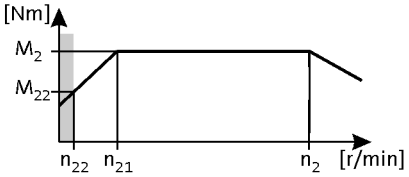

The following applies to self-ventilated geared motors: n_{22} is the minimum speed at which the torque M_{22} is permissible. From n_{21} to n_2, the maximum torque is M_2. The following applies to forced-ventilated geared motors: From the minimum speed n_{22} to n_2, the maximum torque is M_2

The load capacity c of the gearbox c is the ratio of the gearbox's rated torque to the rated torque of the three-phase motor (calculated in respect of its application to the output shaft). c must always be greater than the application factor k determined for the application.

$$c = \frac{M_{2,zul}}{M_{1N} \cdot i \cdot \eta_{Getr}} > k$$

6.10



Notes on ordering

We want to be sure that you receive the correct products in good time.

To allow us to achieve this we need:
- your address and your company data
- our product key for the individual products in this catalogue
- your delivery date and delivery address

Ordering procedure
Please use the ordering information checklist to ensure that you provide all the ordering information required for the various products.

The ordering information checklist, the product key, the basic versions, options, mounting position and position of the system blocks will be found in the General – Product key section.

A list of Lenze's worldwide sales offices can be found on the Internet: www.Lenze.com.



Ordering details checklist

☐ **Offer**

Page __ of __

☐ **Order**

Customer No.

Job No.

Fax No. _____

Sender

Company _____ Made out by (name) _____

Street/P.O. Box _____ Department _____

P.O. Box, City _____ Telephone No. _____

Date _____ Signature _____

Delivery address (if different)

Street/P.O. Box _____ Desired delivery date _____

P.O. Box, City _____ Dispatching notes _____

Invoice recipient (if different)

Street/P.O. Box _____

Postal code, City _____



Ordering details checklist

Customer No.

Job No.

Page __

Quantity

Efficiency class ☐ Standard efficiency ☐ High efficiency (IE2)

Rated frequency ☐ 50 Hz ☐ 60 Hz ☐ 87 Hz

Ratio i

GSS ☐☐ – ☐2 ☐3 ☐M ☐E ☐V ☐H ☐S ☐A ☐B ☐R ☐K Motor frame size ☐☐☐C☐☐

Hollow shaft d = ☐ mm

Flange a_2 = ☐ mm

Mounting position A ☐ B ☐ C ☐ D ☐ E ☐ F ☐

Position of system blocks

Shaft/shrink disc: 0 ☐ 3 ☐ 4 ☐ 8 ☐

Flange: 0 ☐ 3 ☐ 5 ☐ 8 ☐

Terminal box: 2 ☐ 3 ☐ 4 ☐ 5 ☐

Surface and corrosion protection ☐ OKS-S colour: RAL 7012 ☐ OKS-G (primed)

Options

Special lubricants ☐ CLP HC 220 USDA H1 (for the food industry)

Surface and corrosion protection ☐ OKS-S (small) ☐ OKS-M (medium) RAL ☐ ☐ OKS-L (high) ☐ OKS-G (primed)

Accessories ☐ Torque support for housing foot ☐ Torque support for threaded pitch circle ☐ 2nd output shaft end ☐ Mounting set for hollow-shaft circlip ☐ Shrink disc cover ☐ Hollow shaft cover, hoseproof

Shaft sealing rings ☐ Viton

Breathing ☐ Breather elements for GSS05

6.10



Ordering details checklist

Three-phase AC motors options

Customer No. ☐☐☐☐☐☐☐☐

Job No. ☐☐☐☐☐☐☐☐☐☐

Page __

Motor connection

Terminal box
- ☐ with plug-in connector ICN 6-pin. Adhere to permissible rated motor current 20 A!
- ☐ with plug-in connector ICN 8-pin. Adhere to permissible rated motor current 20 A!
- ☐ with plug-in connector HAN10E. Adhere to permissible rated current 16 A!
- ☐ with plug-in connector HAN-Modular. Adhere to permissible rated current 16 / 40 A!

Cable entry
only with M□□MAXX/LL063 ... 132
or terminal box with plug-in connector
in position 1 ☐ 2 ☐ 3 ☐ 4 ☐ 5 ☐

Blower

☐ 1~ ☐ 3~

☐ Terminal box with plug-in connector ICN

Terminal box position 2 ☐ 3 ☐ 4 ☐ 5 ☐

Spring-applied brake

Brake version ☐ Standard ☐ Longlife

Brake size ☐

Characteristic torque ☐ Nm

Rated voltage AC ☐ DC ☐ ☐ V

Rectifier
Only in the case of AC supply voltage

- ☐ Half-wave rectifier
- ☐ Bridge rectifier
- ☐ Bridge/half-wave rectifier (overexcitation)
- ☐ Bridge/half-wave rectifier (holding current reduction)

Brake options
Manual release lever in position 2 ☐ 3 ☐ 4 ☐ 5 ☐

☐ Low-noise version (Standard in the case of brake with speed/position encoder)

6.10



Ordering details checklist

Three-phase AC motors options

Customer No. ☐☐☐☐☐☐☐☐

Job No. ☐☐☐☐☐☐☐☐☐☐

Page __

Speed/position encoder

Resolver ☐ RS1

Incremental encoder HTL ☐ IG128-24V-H ☐ IG512-24V-H ☐ IG1024-24V-H ☐ IG2048-24V-H

Incremental encoder TTL ☐ IG512-5V-T ☐ IG1024-5V-T ☐ IG2048-5V-T

Feedback with ICN connector ☐ IG128-24V-H not possible with plug-in connector!

Motor protection ☐ PTC ☐ KTY 83-110 ☐ KTY 84-130

Approval ☐ UL/CSA approval: cURus ☐ CCC ☐ China Energy Label

Further options

Indication of supply voltage only for motor frame sizes 112C32 to 225C22

☐ Δ; 400V-50Hz; 460V-60Hz ☐ Y/Δ; 400/230V-50Hz; 460/265V-60Hz (-/400V-87Hz possible in operation with frequency inverter)

☐ Protection cover

☐ 2nd shaft end

☐ Handwheel

☐ Increased centrifugal mass

☐ 2nd nameplate (adhesive nameplate/metal nameplate)

6.10

Permissible radial and axial forces at output

Permissible radial force
$F_{rad,per} = \min(f_w \times f_\alpha \times F_{rad,max}\ ;\ f_w \times F_{rad,max}$ at $n_2 \leq 16$ r/min)

Permissible axial force
$F_{ax,per} = F_{ax,max}$ if $F_{rad} = 0$

If F_{rad} **and** $F_{ax} \neq 0$; please contact Lenze.

Application of forces

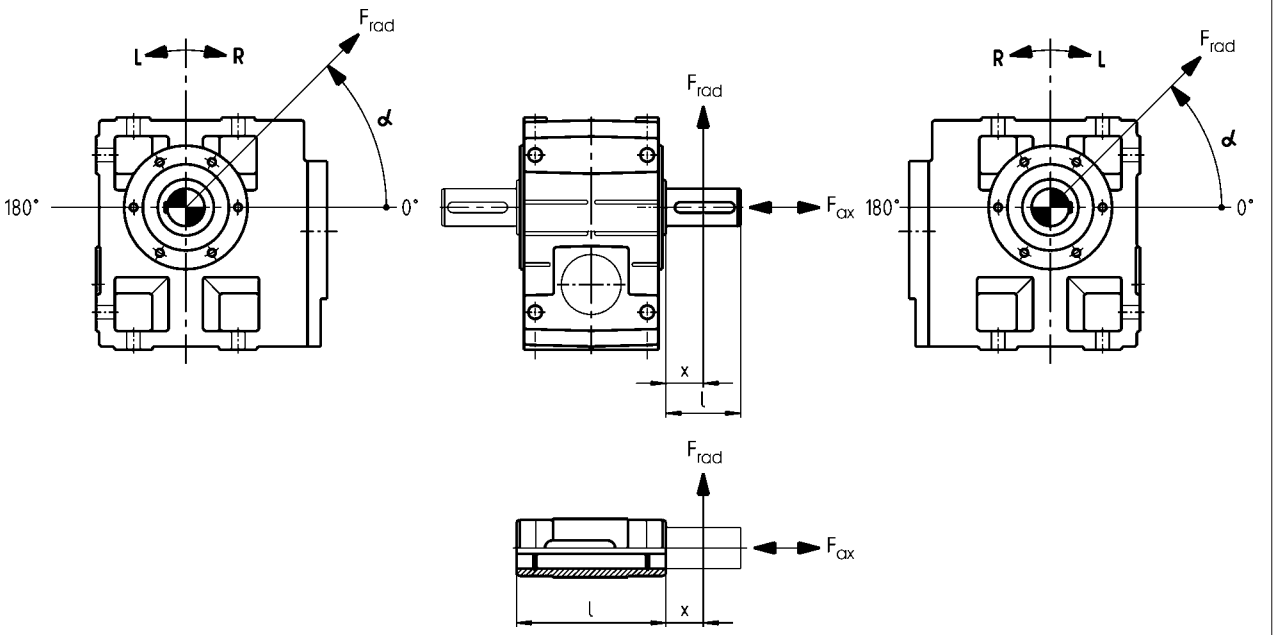

Effective direction factor f_α at output shaft

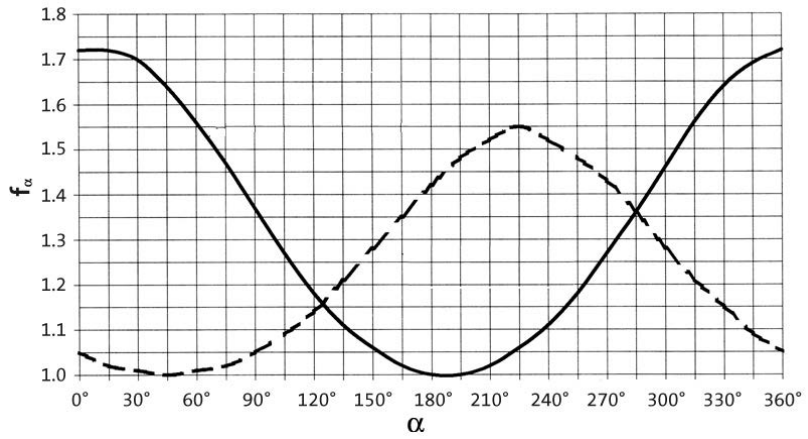

——— Direction of rotation R
— — — Direction of rotation L

6.10



Permissible radial and axial forces at output

Additional load factor f_w at output shaft

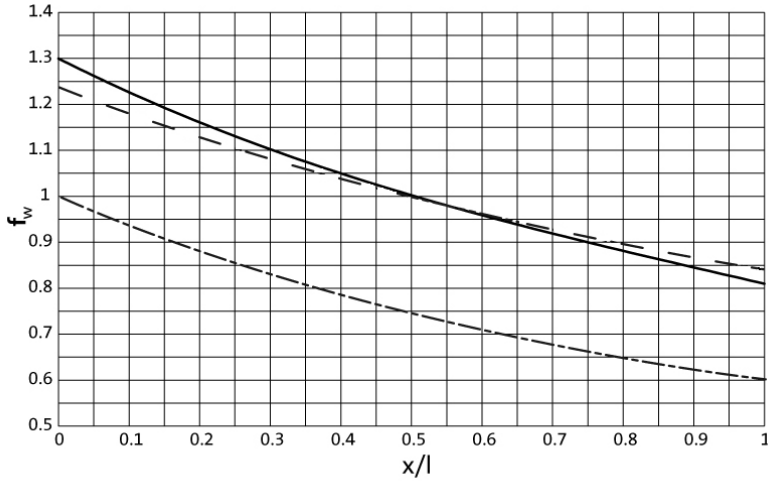

——— Solid shaft (V□□)
— · — Hollow shaft (H□□)
— — — Solid shaft with flange (V□K)

GSS□□-2/3□ H□□

Size	n_2 [r/min]								
Gearbox	630	400	250	160	100	63	40	25	≤16

	Max. radial force, Hollow shaft								
	$F_{rad,max}$	$F_{rad,max}$	$F_{rad,max}$	$F_{rad,max}$	$F_{rad,max}$	$F_{rad,max}$	$F_{rad,max}$	$F_{rad,max}$	$F_{rad,max}$
	[N]	[N]	[N]	[N]	[N]	[N]	[N]	[N]	[N]
GSS04	2800	3000	3800	4500	5300	6000	6000	6000	6000
GSS05	3000	3200	3600	4300	5100	6000	7000	7500	7500
GSS06	4400	4600	4800	5600	6600	7700	9100	10700	11500
GSS07	4600	5100	5600	6700	8200	10000	12100	14800	16000

	Max. axial force, Hollow shaft								
	$F_{ax,max}$	$F_{ax,max}$	$F_{ax,max}$	$F_{ax,max}$	$F_{ax,max}$	$F_{ax,max}$	$F_{ax,max}$	$F_{ax,max}$	$F_{ax,max}$
	[N]	[N]	[N]	[N]	[N]	[N]	[N]	[N]	[N]
GSS04	2200	2900	3700	4200	4900	5500	5500	5500	5500
GSS05	1600	2200	2800	3500	4400	5500	6000	6000	6000
GSS06	1900	2500	3200	4100	5200	6500	8200	9000	9000
GSS07	1800	2400	3100	4100	5500	7200	9500	12500	12500

6.10

- Application of force F_{rad}: at hollow shaft end face (x = 0)
- $F_{ax,max}$ only valid with F_{rad} = 0
- Neither radial nor axial forces are permissible for the hollow shaft with shrink disc (S□□).



Permissible radial and axial forces at output

GSS□□-2/3□ V□R

Size	n_2 [r/min]								
Gearbox	630	400	250	160	100	63	40	25	≤16

	Max. radial force, Solid shaft without flange								
	$F_{rad,max}$	$F_{rad,max}$	$F_{rad,max}$	$F_{rad,max}$	$F_{rad,max}$	$F_{rad,max}$	$F_{rad,max}$	$F_{rad,max}$	$F_{rad,max}$
	[N]	[N]	[N]	[N]	[N]	[N]	[N]	[N]	[N]
GSS04	2200	2400	3000	3500	4100	4200	4200	4200	4200
GSS05	2300	2500	2900	3400	4000	4300	4300	4300	4300
GSS06	3400	3500	3600	4200	5000	5900	6900	8200	8500
GSS07	3700	4000	4200	5100	6300	7700	9300	11300	12000

	Max. axial force, Solid shaft without flange								
	$F_{ax,max}$	$F_{ax,max}$	$F_{ax,max}$	$F_{ax,max}$	$F_{ax,max}$	$F_{ax,max}$	$F_{ax,max}$	$F_{ax,max}$	$F_{ax,max}$
	[N]	[N]	[N]	[N]	[N]	[N]	[N]	[N]	[N]
GSS04	2200	2900	3700	4200	4900	5500	5500	5500	5500
GSS05	1600	2200	2800	3500	4400	5500	6000	6000	6000
GSS06	1900	2500	3200	4100	5200	6500	8200	9000	9000
GSS07	1800	2400	3100	4100	5500	7200	9500	12500	12500

GSS□□-2/3□ V□K

Size	n_2 [r/min]								
Gearbox	630	400	250	160	100	63	40	25	≤16

	Max. radial force, Solid shaft with flange								
	$F_{rad,max}$	$F_{rad,max}$	$F_{rad,max}$	$F_{rad,max}$	$F_{rad,max}$	$F_{rad,max}$	$F_{rad,max}$	$F_{rad,max}$	$F_{rad,max}$
	[N]	[N]	[N]	[N]	[N]	[N]	[N]	[N]	[N]
GSS04	2750	3000	4100	4400	4700	4700	4700	4700	4700
GSS05	3450	3750	4900	4900	4900	4900	4900	4900	4900
GSS06	5100	5250	7000	8100	9400	9400	9400	9400	9400
GSS07	5500	6000	7900	9100	10600	12400	14000	14000	14000

	Max. axial force, Solid shaft with flange								
	$F_{ax,max}$	$F_{ax,max}$	$F_{ax,max}$	$F_{ax,max}$	$F_{ax,max}$	$F_{ax,max}$	$F_{ax,max}$	$F_{ax,max}$	$F_{ax,max}$
	[N]	[N]	[N]	[N]	[N]	[N]	[N]	[N]	[N]
GSS04	2100	2800	3500	4000	4200	4200	4200	4200	4200
GSS05	1500	2000	2500	3100	4000	4900	5500	5500	5500
GSS06	1600	2200	2800	3500	4500	5700	7300	8800	8800
GSS07	1400	1900	2400	3200	4300	5900	8000	10000	10000

► Application of force F_{rad}: centre of shaft journal (x = l/2)
► $F_{ax,max}$ only valid with F_{rad} = 0



Moments of inertia

GSS□□-2

► Moment of inertia (J) depending on ratio i

Gearbox			GSS04
5.639	J	[kgcm²]	1.120
7.733	J	[kgcm²]	0.652
9.042	J	[kgcm²]	0.809
9.897	J	[kgcm²]	0.430
10.827	J	[kgcm²]	0.368
12.400	J	[kgcm²]	0.487
13.810	J	[kgcm²]	0.247
15.869	J	[kgcm²]	0.329
17.360	J	[kgcm²]	0.284
20.417	J	[kgcm²]	0.673
22.143	J	[kgcm²]	0.195
24.800	J	[kgcm²]	0.420
27.125	J	[kgcm²]	0.145
31.738	J	[kgcm²]	0.288
34.100	J	[kgcm²]	0.096
39.200	J	[kgcm²]	0.247
43.917	J	[kgcm²]	0.064
50.000	J	[kgcm²]	0.173
54.250	J	[kgcm²]	0.131
61.250	J	[kgcm²]	0.130
68.200	J	[kgcm²]	0.087
77.000	J	[kgcm²]	0.086
87.833	J	[kgcm²]	0.059
99.167	J	[kgcm²]	0.058
111.318	J	[kgcm²]	0.039
125.682	J	[kgcm²]	0.038
139.500	J	[kgcm²]	0.027
157.500	J	[kgcm²]	0.026
183.786	J	[kgcm²]	0.016
207.500	J	[kgcm²]	0.016

Gearbox			GSS05
5.639	J	[kgcm²]	2.821
7.733	J	[kgcm²]	1.664
9.042	J	[kgcm²]	2.014
9.897	J	[kgcm²]	1.102
10.827	J	[kgcm²]	0.941
12.400	J	[kgcm²]	1.235
13.810	J	[kgcm²]	0.638
15.869	J	[kgcm²]	0.840
17.360	J	[kgcm²]	0.722
20.417	J	[kgcm²]	1.601
22.143	J	[kgcm²]	0.504
24.800	J	[kgcm²]	1.059
27.125	J	[kgcm²]	0.377
31.738	J	[kgcm²]	0.733
35.306	J	[kgcm²]	0.233
39.200	J	[kgcm²]	0.610
43.917	J	[kgcm²]	0.167
50.000	J	[kgcm²]	0.435
54.250	J	[kgcm²]	0.341
61.250	J	[kgcm²]	0.332
70.611	J	[kgcm²]	0.211
79.722	J	[kgcm²]	0.206
87.833	J	[kgcm²]	0.153
99.167	J	[kgcm²]	0.149
113.667	J	[kgcm²]	0.096
128.333	J	[kgcm²]	0.094
137.950	J	[kgcm²]	0.070
155.750	J	[kgcm²]	0.069
176.313	J	[kgcm²]	0.045
199.063	J	[kgcm²]	0.044

► The moments of inertia relate to the drive shaft of the gearbox.
► The total moment of inertia is calculated by adding the values of the gearbox, motor and accessories.



Moments of inertia

GSS□□-2

► Moment of inertia (J) depending on ratio i

Gearbox			GSS06
5.833	J	[kgcm²]	6.966
8.000	J	[kgcm²]	4.219
9.042	J	[kgcm²]	5.541
10.238	J	[kgcm²]	2.811
11.200	J	[kgcm²]	2.393
12.400	J	[kgcm²]	3.461
14.286	J	[kgcm²]	1.630
15.869	J	[kgcm²]	2.348
17.360	J	[kgcm²]	2.006
20.417	J	[kgcm²]	4.172
22.143	J	[kgcm²]	1.392
24.800	J	[kgcm²]	3.056
27.125	J	[kgcm²]	1.039
31.738	J	[kgcm²]	2.101
35.306	J	[kgcm²]	0.660
39.200	J	[kgcm²]	1.635
43.917	J	[kgcm²]	0.475
50.000	J	[kgcm²]	1.164
54.250	J	[kgcm²]	0.955
61.250	J	[kgcm²]	0.887
70.611	J	[kgcm²]	0.610
79.722	J	[kgcm²]	0.570
87.833	J	[kgcm²]	0.443
99.167	J	[kgcm²]	0.417
113.667	J	[kgcm²]	0.276
128.333	J	[kgcm²]	0.260
137.950	J	[kgcm²]	0.201
155.750	J	[kgcm²]	0.191
174.375	J	[kgcm²]	0.130
196.875	J	[kgcm²]	0.123

Gearbox			GSS07
5.862	J	[kgcm²]	21.357
8.125	J	[kgcm²]	12.754
9.086	J	[kgcm²]	17.436
10.000	J	[kgcm²]	9.140
11.200	J	[kgcm²]	7.498
12.594	J	[kgcm²]	10.713
14.286	J	[kgcm²]	4.837
15.500	J	[kgcm²]	7.792
17.360	J	[kgcm²]	6.424
20.517	J	[kgcm²]	13.579
22.143	J	[kgcm²]	4.177
25.188	J	[kgcm²]	9.590
27.125	J	[kgcm²]	3.130
31.000	J	[kgcm²]	7.051
35.306	J	[kgcm²]	1.955
39.200	J	[kgcm²]	5.368
43.271	J	[kgcm²]	1.433
50.000	J	[kgcm²]	3.527
54.250	J	[kgcm²]	2.888
61.250	J	[kgcm²]	2.698
70.611	J	[kgcm²]	1.812
79.722	J	[kgcm²]	1.700
86.542	J	[kgcm²]	1.338
97.708	J	[kgcm²]	1.263
113.667	J	[kgcm²]	0.833
128.333	J	[kgcm²]	0.789
137.950	J	[kgcm²]	0.609
155.750	J	[kgcm²]	0.579
174.375	J	[kgcm²]	0.391
196.875	J	[kgcm²]	0.373

► The moments of inertia relate to the drive shaft of the gearbox.
► The total moment of inertia is calculated by adding the values of the gearbox, motor and accessories.



Moments of inertia

GSS□□-3

► Moment of inertia (J) depending on ratio i

Gearbox			GSS05
125.476	J	[kgcm²]	0.154
153.708	J	[kgcm²]	0.117
193.233	J	[kgcm²]	0.078
222.133	J	[kgcm²]	0.206
250.952	J	[kgcm²]	0.151
283.333	J	[kgcm²]	0.148
307.417	J	[kgcm²]	0.115
347.083	J	[kgcm²]	0.113
386.467	J	[kgcm²]	0.077
436.333	J	[kgcm²]	0.076
497.722	J	[kgcm²]	0.053
561.944	J	[kgcm²]	0.052
630.803	J	[kgcm²]	0.035
712.197	J	[kgcm²]	0.034
790.500	J	[kgcm²]	0.024
892.500	J	[kgcm²]	0.024
1041.452	J	[kgcm²]	0.015
1175.833	J	[kgcm²]	0.015

Gearbox			GSS06
126.531	J	[kgcm²]	0.310
142.857	J	[kgcm²]	0.298
155.000	J	[kgcm²]	0.271
175.000	J	[kgcm²]	0.263
194.857	J	[kgcm²]	0.144
220.000	J	[kgcm²]	0.139
238.700	J	[kgcm²]	0.128
269.500	J	[kgcm²]	0.124
310.689	J	[kgcm²]	0.112
350.778	J	[kgcm²]	0.110
386.467	J	[kgcm²]	0.103
436.333	J	[kgcm²]	0.102
497.722	J	[kgcm²]	0.069
561.944	J	[kgcm²]	0.068
630.803	J	[kgcm²]	0.045
712.197	J	[kgcm²]	0.044
816.333	J	[kgcm²]	0.042
921.667	J	[kgcm²]	0.042
1023.000	J	[kgcm²]	0.029
1155.000	J	[kgcm²]	0.029
1241.550	J	[kgcm²]	0.028
1401.750	J	[kgcm²]	0.028
1635.693	J	[kgcm²]	0.017
1846.750	J	[kgcm²]	0.017

► The moments of inertia relate to the drive shaft of the gearbox.
► The total moment of inertia is calculated by adding the values of the gearbox, motor and accessories.



Moments of inertia

GSS□□-3

► Moment of inertia (J) depending on ratio i

Gearbox			GSS07
126.531	J	[kgcm²]	0.857
142.857	J	[kgcm²]	0.822
155.000	J	[kgcm²]	0.742
175.000	J	[kgcm²]	0.719
201.746	J	[kgcm²]	0.372
227.778	J	[kgcm²]	0.358
247.139	J	[kgcm²]	0.327
279.028	J	[kgcm²]	0.317
321.673	J	[kgcm²]	0.281
363.179	J	[kgcm²]	0.276
394.245	J	[kgcm²]	0.258
445.116	J	[kgcm²]	0.255
490.403	J	[kgcm²]	0.183
553.681	J	[kgcm²]	0.181
634.639	J	[kgcm²]	0.114
716.528	J	[kgcm²]	0.113
833.556	J	[kgcm²]	0.105
941.111	J	[kgcm²]	0.105
1011.633	J	[kgcm²]	0.076
1142.167	J	[kgcm²]	0.076
1227.755	J	[kgcm²]	0.074
1386.175	J	[kgcm²]	0.073
1569.181	J	[kgcm²]	0.047
1771.656	J	[kgcm²]	0.047

► The moments of inertia relate to the drive shaft of the gearbox.
► The total moment of inertia is calculated by adding the values of the gearbox, motor and accessories.



Efficiencies

► During start-up, the start-up efficiency η_a of a helical-worm gearbox is lower than its operative efficiency at rated speed.
The start-up efficiency η_a must therefore always be considered when starting under load.

GSS04-2

				n_2 [r/min]											
				10	16	25	32	40	63	100	160	250	400	630	800
5.639	η_a	0.71	$\eta_{c=1}$	0.83	0.86	0.88	0.89	0.89	0.90	0.90	0.90	0.90	0.90	0.89	0.89
7.733	η_a	0.71	$\eta_{c=1}$	0.83	0.86	0.88	0.89	0.89	0.90	0.90	0.90	0.90	0.90	0.89	0.89
9.042	η_a	0.67	$\eta_{c=1}$	0.81	0.84	0.86	0.87	0.87	0.88	0.88	0.87	0.87	0.87	0.87	
9.897	η_a	0.71	$\eta_{c=1}$	0.83	0.86	0.88	0.89	0.89	0.90	0.90	0.90	0.90	0.90	0.89	0.89
10.827	η_a	0.71	$\eta_{c=1}$	0.83	0.86	0.88	0.89	0.89	0.90	0.90	0.90	0.90	0.90	0.89	0.89
12.400	η_a	0.67	$\eta_{c=1}$	0.81	0.84	0.86	0.87	0.87	0.88	0.88	0.87	0.87	0.87	0.87	
13.810	η_a	0.71	$\eta_{c=1}$	0.83	0.86	0.88	0.89	0.89	0.90	0.90	0.90	0.90	0.90	0.89	0.89
15.869	η_a	0.67	$\eta_{c=1}$	0.81	0.84	0.86	0.87	0.87	0.88	0.88	0.87	0.87	0.87	0.87	
17.360	η_a	0.67	$\eta_{c=1}$	0.81	0.84	0.86	0.87	0.87	0.88	0.88	0.87	0.87	0.87	0.87	
20.417	η_a	0.55	$\eta_{c=1}$	0.76	0.78	0.79	0.79	0.79	0.79	0.79	0.78	0.78			
22.143	η_a	0.67	$\eta_{c=1}$	0.81	0.84	0.86	0.87	0.87	0.88	0.88	0.87	0.87	0.87	0.87	
24.800	η_a	0.56	$\eta_{c=1}$	0.77	0.79	0.80	0.81	0.81	0.81	0.80	0.80	0.79			
27.125	η_a	0.67	$\eta_{c=1}$	0.81	0.84	0.86	0.87	0.87	0.88	0.88	0.87	0.87	0.87	0.87	
31.738	η_a	0.56	$\eta_{c=1}$	0.77	0.79	0.80	0.81	0.81	0.81	0.80	0.80	0.79			
34.100	η_a	0.67	$\eta_{c=1}$	0.81	0.84	0.86	0.87	0.87	0.88	0.88	0.87	0.87	0.87	0.87	
39.200	η_a	0.55	$\eta_{c=1}$	0.76	0.78	0.79	0.79	0.79	0.79	0.79	0.78	0.78			
43.917	η_a	0.67	$\eta_{c=1}$	0.81	0.84	0.86	0.87	0.87	0.88	0.88	0.87	0.87	0.87	0.87	
50.000	η_a	0.55	$\eta_{c=1}$	0.76	0.78	0.79	0.79	0.79	0.79	0.79	0.78	0.78			
54.250	η_a	0.56	$\eta_{c=1}$	0.77	0.79	0.80	0.81	0.81	0.81	0.80	0.80	0.79			
61.250	η_a	0.55	$\eta_{c=1}$	0.76	0.78	0.79	0.79	0.79	0.79	0.79	0.78	0.78			
68.200	η_a	0.56	$\eta_{c=1}$	0.77	0.79	0.80	0.81	0.81	0.81	0.80	0.80	0.79			
77.000	η_a	0.55	$\eta_{c=1}$	0.76	0.78	0.79	0.79	0.79	0.79	0.79	0.78	0.78			
87.833	η_a	0.56	$\eta_{c=1}$	0.77	0.79	0.80	0.81	0.81	0.81	0.80	0.80	0.79			
99.167	η_a	0.55	$\eta_{c=1}$	0.76	0.78	0.79	0.79	0.79	0.79	0.79	0.78	0.78			
111.318	η_a	0.56	$\eta_{c=1}$	0.77	0.79	0.80	0.81	0.81	0.81	0.80	0.80	0.79			
125.682	η_a	0.55	$\eta_{c=1}$	0.76	0.78	0.79	0.79	0.79	0.79	0.79	0.78	0.78			
139.500	η_a	0.56	$\eta_{c=1}$	0.77	0.79	0.80	0.81	0.81	0.81	0.80	0.80	0.79			
157.500	η_a	0.55	$\eta_{c=1}$	0.76	0.78	0.79	0.79	0.79	0.79	0.79	0.78	0.78			
183.786	η_a	0.56	$\eta_{c=1}$	0.77	0.79	0.80	0.81	0.81	0.81	0.80	0.80	0.79			
207.500	η_a	0.55	$\eta_{c=1}$	0.76	0.78	0.79	0.79	0.79	0.79	0.79	0.78	0.78			



Efficiencies

► During start-up, the start-up efficiency η_a of a helical-worm gearbox is lower than its operative efficiency at rated speed. **The start-up efficiency η_a must therefore always be considered when starting under load.**

GSS05-2

				n_2 [r/min]											
				10	16	25	32	40	63	100	160	250	400	630	800
5.639	η_a	0.71	$\eta_{c=1}$	0.85	0.87	0.89	0.90	0.90	0.91	0.91	0.91	0.91	0.90	0.90	0.90
7.733	η_a	0.71	$\eta_{c=1}$	0.85	0.87	0.89	0.90	0.90	0.91	0.91	0.91	0.91	0.90	0.90	0.90
9.042	η_a	0.67	$\eta_{c=1}$	0.83	0.86	0.87	0.88	0.88	0.89	0.89	0.88	0.88	0.88	0.88	
9.897	η_a	0.71	$\eta_{c=1}$	0.85	0.87	0.89	0.90	0.90	0.91	0.91	0.91	0.91	0.90	0.90	0.90
10.827	η_a	0.71	$\eta_{c=1}$	0.85	0.87	0.89	0.90	0.90	0.91	0.91	0.91	0.91	0.90	0.90	0.90
12.400	η_a	0.67	$\eta_{c=1}$	0.83	0.86	0.87	0.88	0.88	0.89	0.89	0.88	0.88	0.88	0.88	
13.810	η_a	0.71	$\eta_{c=1}$	0.85	0.87	0.89	0.90	0.90	0.91	0.91	0.91	0.91	0.90	0.90	0.90
15.869	η_a	0.67	$\eta_{c=1}$	0.83	0.86	0.87	0.88	0.88	0.89	0.89	0.88	0.88	0.88	0.88	
17.360	η_a	0.67	$\eta_{c=1}$	0.83	0.86	0.87	0.88	0.88	0.89	0.89	0.88	0.88	0.88	0.88	
20.417	η_a	0.55	$\eta_{c=1}$	0.79	0.80	0.81	0.81	0.81	0.81	0.81	0.81	0.81			
22.143	η_a	0.67	$\eta_{c=1}$	0.83	0.86	0.87	0.88	0.88	0.89	0.89	0.88	0.88	0.88	0.88	
24.800	η_a	0.57	$\eta_{c=1}$	0.79	0.81	0.82	0.82	0.83	0.83	0.82	0.82	0.82			
27.125	η_a	0.67	$\eta_{c=1}$	0.83	0.86	0.87	0.88	0.88	0.89	0.89	0.88	0.88	0.88	0.88	
31.738	η_a	0.57	$\eta_{c=1}$	0.79	0.81	0.82	0.82	0.83	0.83	0.82	0.82	0.82			
35.306	η_a	0.67	$\eta_{c=1}$	0.83	0.86	0.87	0.88	0.88	0.89	0.89	0.88	0.88	0.88	0.88	
39.200	η_a	0.55	$\eta_{c=1}$	0.79	0.80	0.81	0.81	0.81	0.81	0.81	0.81	0.81			
43.917	η_a	0.67	$\eta_{c=1}$	0.83	0.86	0.87	0.88	0.88	0.89	0.89	0.88	0.88	0.88	0.88	
50.000	η_a	0.55	$\eta_{c=1}$	0.79	0.80	0.81	0.81	0.81	0.81	0.81	0.81	0.81			
54.250	η_a	0.57	$\eta_{c=1}$	0.79	0.81	0.82	0.82	0.83	0.83	0.82	0.82	0.82			
61.250	η_a	0.55	$\eta_{c=1}$	0.79	0.80	0.81	0.81	0.81	0.81	0.81	0.81	0.81			
70.611	η_a	0.57	$\eta_{c=1}$	0.79	0.81	0.82	0.82	0.83	0.83	0.82	0.82	0.82			
79.722	η_a	0.55	$\eta_{c=1}$	0.79	0.80	0.81	0.81	0.81	0.81	0.81	0.81	0.81			
87.833	η_a	0.57	$\eta_{c=1}$	0.79	0.81	0.82	0.82	0.83	0.83	0.82	0.82	0.82			
99.167	η_a	0.55	$\eta_{c=1}$	0.79	0.80	0.81	0.81	0.81	0.81	0.81	0.81	0.81			
113.667	η_a	0.57	$\eta_{c=1}$	0.79	0.81	0.82	0.82	0.83	0.83	0.82	0.82	0.82			
128.333	η_a	0.55	$\eta_{c=1}$	0.79	0.80	0.81	0.81	0.81	0.81	0.81	0.81	0.81			
137.950	η_a	0.57	$\eta_{c=1}$	0.79	0.81	0.82	0.82	0.83	0.83	0.82	0.82	0.82			
155.750	η_a	0.55	$\eta_{c=1}$	0.79	0.80	0.81	0.81	0.81	0.81	0.81	0.81	0.81			
176.313	η_a	0.57	$\eta_{c=1}$	0.79	0.81	0.82	0.82	0.83	0.83	0.82	0.82	0.82			
199.063	η_a	0.55	$\eta_{c=1}$	0.79	0.80	0.81	0.81	0.81	0.81	0.81	0.81	0.81			



Efficiencies

► During start-up, the start-up efficiency η_a of a helical-worm gearbox is lower than its operative efficiency at rated speed.
The start-up efficiency η_a must therefore always be considered when starting under load.

GSS05-3

				n_2 [r/min]										
				10	16	25	32	40	63	100	160	250	400	630
125.476	η_a	0.67	$\eta_{c=1}$	0.83	0.86	0.87	0.88	0.88	0.89	0.89	0.88	0.88	0.88	0.88
153.708	η_a	0.67	$\eta_{c=1}$	0.83	0.86	0.87	0.88	0.88	0.89	0.89	0.88	0.88	0.88	0.88
193.233	η_a	0.67	$\eta_{c=1}$	0.83	0.86	0.87	0.88	0.88	0.89	0.89	0.88	0.88	0.88	0.88
222.133	η_a	0.55	$\eta_{c=1}$	0.79	0.80	0.81	0.81	0.81	0.81	0.81	0.81	0.81		
250.952	η_a	0.57	$\eta_{c=1}$	0.79	0.81	0.82	0.82	0.83	0.83	0.82	0.82	0.82		
283.333	η_a	0.55	$\eta_{c=1}$	0.79	0.80	0.81	0.81	0.81	0.81	0.81	0.81	0.81		
307.417	η_a	0.57	$\eta_{c=1}$	0.79	0.81	0.82	0.82	0.83	0.83	0.82	0.82	0.82		
347.083	η_a	0.55	$\eta_{c=1}$	0.79	0.80	0.81	0.81	0.81	0.81	0.81	0.81	0.81		
386.467	η_a	0.57	$\eta_{c=1}$	0.79	0.81	0.82	0.82	0.83	0.83	0.82	0.82	0.82		
436.333	η_a	0.55	$\eta_{c=1}$	0.79	0.80	0.81	0.81	0.81	0.81	0.81	0.81	0.81		
497.722	η_a	0.57	$\eta_{c=1}$	0.79	0.81	0.82	0.82	0.83	0.83	0.82	0.82	0.82		
561.945	η_a	0.55	$\eta_{c=1}$	0.79	0.80	0.81	0.81	0.81	0.81	0.81	0.81	0.81		
630.803	η_a	0.57	$\eta_{c=1}$	0.79	0.81	0.82	0.82	0.83	0.83	0.82	0.82	0.82		
712.197	η_a	0.55	$\eta_{c=1}$	0.79	0.80	0.81	0.81	0.81	0.81	0.81	0.81	0.81		



Efficiencies

► During start-up, the start-up efficiency η_a of a helical-worm gearbox is lower than its operative efficiency at rated speed.
The start-up efficiency η_a must therefore always be considered when starting under load.

GSS06-2

				n_2 [r/min]											
				10	16	25	32	40	63	100	160	250	400	630	800
5.833	η_a	0.72	$\eta_{c=1}$	0.87	0.89	0.90	0.91	0.91	0.91	0.92	0.92	0.92	0.91	0.91	0.91
8.000	η_a	0.72	$\eta_{c=1}$	0.87	0.89	0.90	0.91	0.91	0.91	0.92	0.92	0.92	0.91	0.91	0.91
9.042	η_a	0.67	$\eta_{c=1}$	0.85	0.87	0.88	0.89	0.89	0.89	0.89	0.89	0.89	0.89	0.89	
10.238	η_a	0.72	$\eta_{c=1}$	0.87	0.89	0.90	0.91	0.91	0.91	0.92	0.92	0.92	0.91	0.91	0.91
11.200	η_a	0.72	$\eta_{c=1}$	0.87	0.89	0.90	0.91	0.91	0.91	0.92	0.92	0.92	0.91	0.91	0.91
12.400	η_a	0.67	$\eta_{c=1}$	0.85	0.87	0.88	0.89	0.89	0.89	0.89	0.89	0.89	0.89	0.89	0.80
14.286	η_a	0.72	$\eta_{c=1}$	0.89	0.90	0.91	0.91	0.91	0.92	0.92	0.92	0.91	0.91	0.91	
15.869	η_a	0.67	$\eta_{c=1}$	0.85	0.87	0.88	0.89	0.89	0.89	0.89	0.89	0.89	0.89	0.89	
17.360	η_a	0.67	$\eta_{c=1}$	0.85	0.87	0.88	0.89	0.89	0.89	0.89	0.89	0.89	0.89	0.89	
20.417	η_a	0.57	$\eta_{c=1}$	0.81	0.82	0.83	0.83	0.83	0.83	0.83	0.83	0.83			
22.143	η_a	0.67	$\eta_{c=1}$	0.85	0.87	0.88	0.89	0.89	0.89	0.89	0.89	0.89	0.89	0.89	
24.800	η_a	0.57	$\eta_{c=1}$	0.81	0.83	0.83	0.83	0.83	0.83	0.83	0.83	0.83			
27.125	η_a	0.67	$\eta_{c=1}$	0.85	0.87	0.88	0.89	0.89	0.89	0.89	0.89	0.89	0.89	0.89	
31.738	η_a	0.57	$\eta_{c=1}$	0.81	0.83	0.83	0.83	0.83	0.83	0.83	0.83	0.83			
35.306	η_a	0.67	$\eta_{c=1}$	0.85	0.87	0.88	0.89	0.89	0.89	0.89	0.89	0.89	0.89	0.89	
39.200	η_a	0.57	$\eta_{c=1}$	0.81	0.82	0.83	0.83	0.83	0.83	0.83	0.83	0.83			
43.917	η_a	0.67	$\eta_{c=1}$	0.85	0.87	0.88	0.89	0.89	0.89	0.89	0.89	0.89	0.89	0.89	
50.000	η_a	0.57	$\eta_{c=1}$	0.81	0.82	0.83	0.83	0.83	0.83	0.83	0.83	0.83			
54.250	η_a	0.57	$\eta_{c=1}$	0.81	0.83	0.83	0.83	0.83	0.83	0.83	0.83	0.83			
61.250	η_a	0.57	$\eta_{c=1}$	0.81	0.82	0.83	0.83	0.83	0.83	0.83	0.83	0.83			
70.611	η_a	0.57	$\eta_{c=1}$	0.81	0.83	0.83	0.83	0.83	0.83	0.83	0.83	0.83			
79.722	η_a	0.57	$\eta_{c=1}$	0.81	0.82	0.83	0.83	0.83	0.83	0.83	0.83	0.83			
87.833	η_a	0.57	$\eta_{c=1}$	0.81	0.83	0.83	0.83	0.83	0.83	0.83	0.83	0.83			
99.167	η_a	0.57	$\eta_{c=1}$	0.81	0.82	0.83	0.83	0.83	0.83	0.83	0.83	0.83			
113.667	η_a	0.57	$\eta_{c=1}$	0.81	0.83	0.83	0.83	0.83	0.83	0.83	0.83	0.83			
128.333	η_a	0.57	$\eta_{c=1}$	0.81	0.82	0.83	0.83	0.83	0.83	0.83	0.83	0.83			
137.950	η_a	0.57	$\eta_{c=1}$	0.81	0.83	0.83	0.83	0.83	0.83	0.83	0.83	0.83			
155.750	η_a	0.57	$\eta_{c=1}$	0.81	0.82	0.83	0.83	0.83	0.83	0.83	0.83	0.83			
174.375	η_a	0.57	$\eta_{c=1}$	0.81	0.83	0.83	0.83	0.83	0.83	0.83	0.83	0.83			
196.875	η_a	0.57	$\eta_{c=1}$	0.81	0.82	0.83	0.83	0.83	0.83	0.83	0.83	0.83			



Efficiencies

► During start-up, the start-up efficiency η_a of a helical-worm gearbox is lower than its operative efficiency at rated speed.
The start-up efficiency η_a must therefore always be considered when starting under load.

GSS06-3

				n_2 [r/min]											
				10	16	25	32	40	63	100	160	250	400	630	800
126.531	η_a	0.57	$\eta_{c=1}$	0.81	0.83	0.83	0.83	0.83	0.83	0.83	0.83	0.83	0.91	0.91	0.91
142.857	η_a	0.57	$\eta_{c=1}$	0.81	0.82	0.83	0.83	0.83	0.83	0.83	0.83	0.83			
155.000	η_a	0.57	$\eta_{c=1}$	0.81	0.83	0.83	0.83	0.83	0.83	0.83	0.83	0.83			
175.000	η_a	0.57	$\eta_{c=1}$	0.81	0.82	0.83	0.83	0.83	0.83	0.83	0.83	0.83			
194.857	η_a	0.57	$\eta_{c=1}$	0.81	0.83	0.83	0.83	0.83	0.83	0.83	0.83	0.83			
220.000	η_a	0.57	$\eta_{c=1}$	0.81	0.82	0.83	0.83	0.83	0.83	0.83	0.83	0.83			
238.700	η_a	0.57	$\eta_{c=1}$	0.81	0.83	0.83	0.83	0.83	0.83	0.83	0.83	0.83			
269.500	η_a	0.57	$\eta_{c=1}$	0.81	0.82	0.83	0.83	0.83	0.83	0.83	0.83	0.83			
310.689	η_a	0.57	$\eta_{c=1}$	0.81	0.83	0.83	0.83	0.83	0.83	0.83	0.83	0.83			
350.778	η_a	0.57	$\eta_{c=1}$	0.81	0.82	0.83	0.83	0.83	0.83	0.83	0.83	0.83			
386.467	η_a	0.57	$\eta_{c=1}$	0.81	0.83	0.83	0.83	0.83	0.83	0.83	0.83	0.83			
436.333	η_a	0.57	$\eta_{c=1}$	0.81	0.82	0.83	0.83	0.83	0.83	0.83	0.83	0.83			
497.722	η_a	0.57	$\eta_{c=1}$	0.81	0.83	0.83	0.83	0.83	0.83	0.83	0.83	0.83			
561.945	η_a	0.57	$\eta_{c=1}$	0.81	0.82	0.83	0.83	0.83	0.83	0.83	0.83	0.83			
630.803	η_a	0.57	$\eta_{c=1}$	0.81	0.83	0.83	0.83	0.83	0.83	0.83	0.83	0.83			
712.197	η_a	0.57	$\eta_{c=1}$	0.81	0.82	0.83	0.83	0.83	0.83	0.83	0.83	0.83			
816.333	η_a	0.57	$\eta_{c=1}$	0.81	0.83	0.83	0.83	0.83	0.83	0.83	0.83	0.83			
921.667	η_a	0.57	$\eta_{c=1}$	0.81	0.82	0.83	0.83	0.83	0.83	0.83	0.83	0.83			
1023.000	η_a	0.57	$\eta_{c=1}$	0.81	0.83	0.83	0.83	0.83	0.83	0.83	0.83	0.83			
1155.000	η_a	0.57	$\eta_{c=1}$	0.81	0.82	0.83	0.83	0.83	0.83	0.83	0.83	0.83			
1241.550	η_a	0.57	$\eta_{c=1}$	0.81	0.83	0.83	0.83	0.83	0.83	0.83	0.83	0.83			
1401.750	η_a	0.57	$\eta_{c=1}$	0.81	0.82	0.83	0.83	0.83	0.83	0.83	0.83	0.83			
1635.693	η_a	0.57	$\eta_{c=1}$	0.81	0.83	0.83	0.83	0.83	0.83	0.83	0.83	0.83			
1846.750	η_a	0.57	$\eta_{c=1}$	0.81	0.82	0.83	0.83	0.83	0.83	0.83	0.83	0.83			



Efficiencies

► During start-up, the start-up efficiency η_a of a helical-worm gearbox is lower than its operative efficiency at rated speed.
The start-up efficiency η_a must therefore always be considered when starting under load.

GSS07-2

				n_2 [r/min]											
				10	16	25	32	40	63	100	160	250	400	630	800
5.862	η_a	0.74	$\eta_{c=1}$	0.89	0.91	0.92	0.92	0.92	0.92	0.92	0.92	0.92	0.92	0.92	0.92
8.125	η_a	0.74	$\eta_{c=1}$	0.89	0.91	0.92	0.92	0.92	0.92	0.92	0.92	0.92	0.92	0.92	0.92
9.086	η_a	0.69	$\eta_{c=1}$	0.88	0.89	0.90	0.90	0.90	0.90	0.90	0.90	0.90	0.90	0.90	
10.000	η_a	0.74	$\eta_{c=1}$	0.89	0.91	0.92	0.92	0.92	0.92	0.92	0.92	0.92	0.92	0.92	0.92
11.200	η_a	0.74	$\eta_{c=1}$	0.89	0.91	0.92	0.92	0.92	0.92	0.92	0.92	0.92	0.92	0.92	0.92
12.594	η_a	0.69	$\eta_{c=1}$	0.88	0.89	0.90	0.90	0.90	0.90	0.90	0.90	0.90	0.90	0.90	
14.286	η_a	0.74	$\eta_{c=1}$	0.89	0.91	0.92	0.92	0.92	0.92	0.92	0.92	0.92	0.92	0.92	0.92
15.500	η_a	0.69	$\eta_{c=1}$	0.88	0.89	0.90	0.90	0.90	0.90	0.90	0.90	0.90	0.90	0.90	
17.360	η_a	0.69	$\eta_{c=1}$	0.88	0.89	0.90	0.90	0.90	0.90	0.90	0.90	0.90	0.90	0.90	
20.517	η_a	0.60	$\eta_{c=1}$	0.84	0.84	0.85	0.85	0.85	0.85	0.85	0.85	0.85			
22.143	η_a	0.69	$\eta_{c=1}$	0.88	0.89	0.90	0.90	0.90	0.90	0.90	0.90	0.90	0.90	0.90	
25.188	η_a	0.60	$\eta_{c=1}$	0.84	0.85	0.85	0.85	0.85	0.85	0.85	0.85	0.85			
27.125	η_a	0.69	$\eta_{c=1}$	0.88	0.89	0.90	0.90	0.90	0.90	0.90	0.90	0.90	0.90	0.90	
31.000	η_a	0.60	$\eta_{c=1}$	0.84	0.85	0.85	0.85	0.85	0.85	0.85	0.85	0.85			
35.306	η_a	0.69	$\eta_{c=1}$	0.88	0.89	0.90	0.90	0.90	0.90	0.90	0.90	0.90	0.90	0.90	
39.200	η_a	0.60	$\eta_{c=1}$	0.84	0.84	0.85	0.85	0.85	0.85	0.85	0.85	0.85			
43.271	η_a	0.69	$\eta_{c=1}$	0.88	0.89	0.90	0.90	0.90	0.90	0.90	0.90	0.90	0.90	0.90	
50.000	η_a	0.60	$\eta_{c=1}$	0.84	0.84	0.85	0.85	0.85	0.85	0.85	0.85	0.85			
54.250	η_a	0.60	$\eta_{c=1}$	0.84	0.85	0.85	0.85	0.85	0.85	0.85	0.85	0.85			
61.250	η_a	0.60	$\eta_{c=1}$	0.84	0.84	0.85	0.85	0.85	0.85	0.85	0.85	0.85			
70.611	η_a	0.60	$\eta_{c=1}$	0.84	0.85	0.85	0.85	0.85	0.85	0.85	0.85	0.85			
79.722	η_a	0.60	$\eta_{c=1}$	0.84	0.84	0.85	0.85	0.85	0.85	0.85	0.85	0.85			
86.542	η_a	0.60	$\eta_{c=1}$	0.84	0.85	0.85	0.85	0.85	0.85	0.85	0.85	0.85			
97.708	η_a	0.60	$\eta_{c=1}$	0.84	0.84	0.85	0.85	0.85	0.85	0.85	0.85	0.85			
113.667	η_a	0.60	$\eta_{c=1}$	0.84	0.85	0.85	0.85	0.85	0.85	0.85	0.85	0.85			
128.333	η_a	0.60	$\eta_{c=1}$	0.84	0.84	0.85	0.85	0.85	0.85	0.85	0.85	0.85			
137.950	η_a	0.60	$\eta_{c=1}$	0.84	0.85	0.85	0.85	0.85	0.85	0.85	0.85	0.85			
155.750	η_a	0.60	$\eta_{c=1}$	0.84	0.84	0.85	0.85	0.85	0.85	0.85	0.85	0.85			
174.375	η_a	0.60	$\eta_{c=1}$	0.84	0.85	0.85	0.85	0.85	0.85	0.85	0.85	0.85			
196.875	η_a	0.60	$\eta_{c=1}$	0.84	0.84	0.85	0.85	0.85	0.85	0.85	0.85	0.85			



Efficiencies

► During start-up, the start-up efficiency η_a of a helical-worm gearbox is lower than its operative efficiency at rated speed.
The start-up efficiency η_a must therefore always be considered when starting under load.

GSS07-3

				n_2 [r/min]								
				10	16	25	32	40	63	100	160	250
126.531	η_a	0.60	$\eta_{c=1}$	0.84	0.85	0.85	0.85	0.85	0.85	0.85	0.85	0.85
142.857	η_a	0.60	$\eta_{c=1}$	0.84	0.84	0.85	0.85	0.85	0.85	0.85	0.85	0.85
155.000	η_a	0.60	$\eta_{c=1}$	0.84	0.85	0.85	0.85	0.85	0.85	0.85	0.85	0.85
175.000	η_a	0.60	$\eta_{c=1}$	0.84	0.84	0.85	0.85	0.85	0.85	0.85	0.85	0.85
201.746	η_a	0.60	$\eta_{c=1}$	0.84	0.85	0.85	0.85	0.85	0.85	0.85	0.85	0.85
227.778	η_a	0.60	$\eta_{c=1}$	0.84	0.84	0.85	0.85	0.85	0.85	0.85	0.85	0.85
247.139	η_a	0.60	$\eta_{c=1}$	0.84	0.85	0.85	0.85	0.85	0.85	0.85	0.85	0.85
279.028	η_a	0.60	$\eta_{c=1}$	0.84	0.84	0.85	0.85	0.85	0.85	0.85	0.85	0.85
321.673	η_a	0.60	$\eta_{c=1}$	0.84	0.85	0.85	0.85	0.85	0.85	0.85	0.85	0.85
363.179	η_a	0.60	$\eta_{c=1}$	0.84	0.84	0.85	0.85	0.85	0.85	0.85	0.85	0.85
394.245	η_a	0.60	$\eta_{c=1}$	0.84	0.85	0.85	0.85	0.85	0.85	0.85	0.85	0.85
445.116	η_a	0.60	$\eta_{c=1}$	0.84	0.84	0.85	0.85	0.85	0.85	0.85	0.85	0.85
490.403	η_a	0.60	$\eta_{c=1}$	0.84	0.85	0.85	0.85	0.85	0.85	0.85	0.85	0.85
553.681	η_a	0.60	$\eta_{c=1}$	0.84	0.84	0.85	0.85	0.85	0.85	0.85	0.85	0.85
634.639	η_a	0.60	$\eta_{c=1}$	0.84	0.85	0.85	0.85	0.85	0.85	0.85	0.85	0.85
716.528	η_a	0.60	$\eta_{c=1}$	0.84	0.84	0.85	0.85	0.85	0.85	0.85	0.85	0.85
833.556	η_a	0.60	$\eta_{c=1}$	0.84	0.85	0.85	0.85	0.85	0.85	0.85	0.85	0.85
941.111	η_a	0.60	$\eta_{c=1}$	0.84	0.84	0.85	0.85	0.85	0.85	0.85	0.85	0.85
1011.633	η_a	0.60	$\eta_{c=1}$	0.84	0.85	0.85	0.85	0.85	0.85	0.85	0.85	0.85
1142.167	η_a	0.60	$\eta_{c=1}$	0.84	0.84	0.85	0.85	0.85	0.85	0.85	0.85	0.85
1227.755	η_a	0.60	$\eta_{c=1}$	0.84	0.85	0.85	0.85	0.85	0.85	0.85	0.85	0.85
1386.175	η_a	0.60	$\eta_{c=1}$	0.84	0.84	0.85	0.85	0.85	0.85	0.85	0.85	0.85
1569.181	η_a	0.60	$\eta_{c=1}$	0.84	0.85	0.85	0.85	0.85	0.85	0.85	0.85	0.85
1771.656	η_a	0.60	$\eta_{c=1}$	0.84	0.84	0.85	0.85	0.85	0.85	0.85	0.85	0.85



Weights

GSS□□-2M HAR / HBR

			063C32 063C42	071C32 071C42	080C32 080C42	090C32	100C12 100C32	112C22	132C12 132C22
GSS04	m	[kg]	16	18	23	31			
GSS05	m	[kg]	26	28	32	40	49		
GSS06	m	[kg]	38	40	45	53	61	74	
GSS07	m	[kg]			70	78	86	99	129

GSS□□-2M HAK

			063C32 063C42	071C32 071C42	080C32 080C42	090C32	100C12 100C32	112C22	132C12 132C22
GSS04	m	[kg]	19	21	26	33			
GSS05	m	[kg]	30	32	36	44	53		
GSS06	m	[kg]	45	47	52	60	68	81	
GSS07	m	[kg]			81	89	97	110	140

► Weights with oil filling for mounting position A; all values are approximate.
The weights relate to the basic version. Bear in mind that additional weights may be needed, e.g. for motor options.



Weights

GSS□□-2M VAR / VBR

			063C32 063C42	071C32 071C42	080C32 080C42	090C32	100C12 100C32	112C22	132C12 132C22
GSS04	m	[kg]	17	19	24	31			
GSS05	m	[kg]	27	29	33	41	50		
GSS06	m	[kg]	40	42	47	55	64	77	
GSS07	m	[kg]			75	83	91	104	134

GSS□□-2M VAK

			063C32 063C42	071C32 071C42	080C32 080C42	090C32	100C12 100C32	112C22	132C12 132C22
GSS04	m	[kg]	19	21	26	34			
GSS05	m	[kg]	31	33	37	45	54		
GSS06	m	[kg]	47	49	54	62	71	84	
GSS07	m	[kg]			86	94	102	115	145

► Weights with oil filling for mounting position A; all values are approximate.
The weights relate to the basic version. Bear in mind that additional weights may be needed, e.g. for motor options.



Weights

GSS□□-2M SAR / SBR

			063C32 063C42	071C32 071C42	080C32 080C42	090C32	100C12 100C32	112C22	132C12 132C22
GSS04	m	[kg]	17	19	24	31			
GSS05	m	[kg]	26	29	33	41	50		
GSS06	m	[kg]	39	41	46	54	62	75	
GSS07	m	[kg]			71	79	88	101	130

GSS□□-2M SAK

			063C32 063C42	071C32 071C42	080C32 080C42	090C32	100C12 100C32	112C22	132C12 132C22
GSS04	m	[kg]	19	21	26	34			
GSS05	m	[kg]	30	33	37	45	54		
GSS06	m	[kg]	46	48	53	61	69	82	
GSS07	m	[kg]			82	90	99	112	141

► Weights with oil filling for mounting position A; all values are approximate.
The weights relate to the basic version. Bear in mind that additional weights may be needed, e.g. for motor options.



Weights

GSS□□-3M HAR / HBR

			063C32 063C42	071C32 071C42	080C32	080C42	090C32
GSS05	m	[kg]	26				
GSS06	m	[kg]	42	44	49		
GSS07	m	[kg]	71	73	78		85

GSS□□-3M HAK

			063C32 063C42	071C32 071C42	080C32	080C42	090C32
GSS05	m	[kg]	30				
GSS06	m	[kg]	49	51	56		
GSS07	m	[kg]	82	84	89		96

► Weights with oil filling for mounting position A; all values are approximate.
The weights relate to the basic version. Bear in mind that additional weights may be needed, e.g. for motor options.



Weights

GSS□□-3M VAR / VBR

			063C32 063C42	071C32 071C42	080C32	080C42	090C32
GSS05	m	[kg]	27				
GSS06	m	[kg]	44	46	51		
GSS07	m	[kg]	76	78	83		90

GSS□□-3M VAK

			063C32 063C42	071C32 071C42	080C32	080C42	090C32
GSS05	m	[kg]	31				
GSS06	m	[kg]	51	53	58		
GSS07	m	[kg]	87	89	94		101

► Weights with oil filling for mounting position A; all values are approximate.
The weights relate to the basic version. Bear in mind that additional weights may be needed, e.g. for motor options.



Weights

GSS□□-3M SAR / SBR

			063C32 063C42	071C32 071C42	080C32	080C42	090C32
GSS05	m	[kg]	27				
GSS06	m	[kg]	43	45	50		
GSS07	m	[kg]	72	74	79		87

GSS□□-3M SAK

			063C32 063C42	071C32 071C42	080C32	080C42	090C32
GSS05	m	[kg]	31				
GSS06	m	[kg]	50	52	57		
GSS07	m	[kg]	83	85	90		98

► Weights with oil filling for mounting position A; all values are approximate.
The weights relate to the basic version. Bear in mind that additional weights may be needed, e.g. for motor options.



Selection tables

► 120 Hz: P_N = 0.55 kW

n_{22}/n_2 = 1 ... 24.0

n_1 = 143.3 ... 3440 r/min

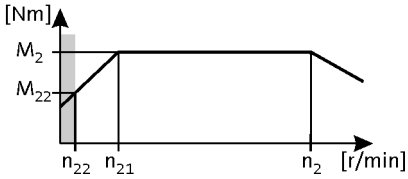

n_{22}	n_{21}		n_2	M_{22}	M_2	c	i			
[r/min]	[r/min]		[r/min]	[Nm]	[Nm]					
15	61	-	348	9.1	13	6.0	9.897	GSS04-2M□□□063C32	E84AV□□□5514□□0	62
13	55	-	318	10	14	5.2	10.827	GSS05-2M□□□063C32	E84AV□□□5514□□0	62
10	43	-	249	12	18	5.5	13.810	GSS04-2M□□□063C32	E84AV□□□5514□□0	62
9.0	38	-	217	14	20	6.0	15.869	GSS04-2M□□□063C32	E84AV□□□5514□□0	62
8.3	35	-	198	16	22	5.2	17.360	GSS05-2M□□□063C32	E84AV□□□5514□□0	62
6.5	27	-	155	19	29	5.1	22.143	GSS04-2M□□□063C32	E84AV□□□5514□□0	62
5.3	22	-	127	23	35	4.5	27.125	GSS04-2M□□□063C32	E84AV□□□5514□□0	62
4.5	19	-	108	24	39	3.4	31.738	GSS04-2M□□□063C32	E84AV□□□5514□□0	62
4.2	18	-	101	28	44	3.8	34.100	GSS04-2M□□□063C32	E84AV□□□5514□□0	62
3.7	15	-	88	29	47	2.9	39.200	GSS04-2M□□□063C32	E84AV□□□5514□□0	62
3.3	14	-	78	36	57	3.1	43.917	GSS04-2M□□□063C32	E84AV□□□5514□□0	62
2.9	12	-	69	36	60	2.5	50.000	GSS04-2M□□□063C32	E84AV□□□5514□□0	62
2.6	11	-	63	40	66	2.4	54.250	GSS04-2M□□□063C32	E84AV□□□5514□□0	62
2.3	9.8	-	56	44	73	2.2	61.250	GSS04-2M□□□063C32	E84AV□□□5514□□0	62
2.1	8.8	-	50	49	83	2.1	68.200	GSS04-2M□□□063C32	E84AV□□□5514□□0	62
1.9	7.8	-	45	53	91	1.9	77.000	GSS04-2M□□□063C32	E84AV□□□5514□□0	62
1.8	7.5	-	43	56	96	3.1	79.722	GSS05-2M□□□063C32	E84AV□□□5514□□0	62
1.6	6.8	-	39	62	106	1.7	87.833	GSS04-2M□□□063C32	E84AV□□□5514□□0	62
1.6	6.8	-	39	62	108	2.9	87.833	GSS05-2M□□□063C32	E84AV□□□5514□□0	62
1.5	6.1	-	35	68	117	1.5	99.167	GSS04-2M□□□063C32	E84AV□□□5514□□0	62
1.5	6.1	-	35	68	120	2.7	99.167	GSS05-2M□□□063C32	E84AV□□□5514□□0	62
1.3	5.4	-	31	80	134	1.3	111.318	GSS04-2M□□□063C32	E84AV□□□5514□□0	62
1.3	5.3	-	30	81	141	2.5	113.667	GSS05-2M□□□063C32	E84AV□□□5514□□0	62
1.1	4.8	-	27	86	147	1.2	125.682	GSS04-2M□□□063C32	E84AV□□□5514□□0	62
1.1	4.8	-	27	86	165	1.6	125.476	GSS05-3M□□□063C32	E84AV□□□5514□□0	70
1.1	4.7	-	27	89	156	2.3	128.333	GSS05-2M□□□063C32	E84AV□□□5514□□0	62
1.0	4.3	-	25	100	167	1.1	139.500	GSS04-2M□□□063C32	E84AV□□□5514□□0	62
1.0	4.4	-	25	99	172	2.1	137.950	GSS05-2M□□□063C32	E84AV□□□5514□□0	62
0.9	3.8	-	22	109	183	1.0	157.500	GSS04-2M□□□063C32	E84AV□□□5514□□0	62
0.9	3.9	-	22	106	202	1.4	153.708	GSS05-3M□□□063C32	E84AV□□□5514□□0	70
0.9	3.9	-	22	109	191	1.9	155.750	GSS05-2M□□□063C32	E84AV□□□5514□□0	62
0.8	3.4	-	20	128	220	1.6	176.313	GSS05-2M□□□063C32	E84AV□□□5514□□0	62
0.8	3.4	-	20	124	210	2.9	174.375	GSS06-2M□□□063C32	E84AV□□□5514□□0	62
0.7	3.1	-	18	134	251	1.2	193.233	GSS05-3M□□□063C32	E84AV□□□5514□□0	70
0.7	3.1	-	18	141	234	2.9	196.875	GSS06-2M□□□063C32	E84AV□□□5514□□0	62
0.7	3.1	-	18	135	222	3.2	194.857	GSS06-3M□□□063C32	E84AV□□□5514□□0	70
0.7	3.0	-	17	140	245	1.5	199.063	GSS05-2M□□□063C32	E84AV□□□5514□□0	62
0.7	2.7	-	16	154	268	1.3	222.133	GSS05-3M□□□063C32	E84AV□□□5514□□0	70
0.7	2.7	-	16	154	248	2.8	220.000	GSS06-3M□□□063C32	E84AV□□□5514□□0	70
0.6	2.4	-	14	175	306	1.2	250.952	GSS05-3M□□□063C32	E84AV□□□5514□□0	70
0.6	2.5	-	14	167	271	2.6	238.700	GSS06-3M□□□063C32	E84AV□□□5514□□0	70



Selection tables

► 120 Hz: P_N = 0.55 kW

n_{22}/n_2 = 1 ... 24.0

n_1 = 143.3 ... 3440 r/min

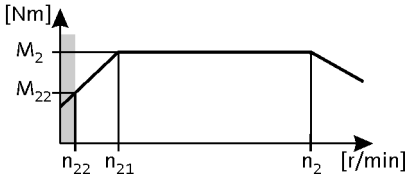

n_{22}	n_{21}		n_2	M_{22}	M_2	c	i			
[r/min]	[r/min]		[r/min]	[Nm]	[Nm]					
0.5	2.2	-	13	190	302	2.3	269.500	GSS06-3M□□□063C32	E84AV□□□5514□□0	70
0.5	2.1	-	12	198	338	1.1	283.333	GSS05-3M□□□063C32	E84AV□□□5514□□0	70
0.5	2.0	-	11	215	371	1.0	307.417	GSS05-3M□□□063C32	E84AV□□□5514□□0	70
0.5	1.9	-	11	220	350	2.0	310.689	GSS06-3M□□□063C32	E84AV□□□5514□□0	70
0.4	1.7	-	9.8	250	388	1.8	350.778	GSS06-3M□□□063C32	E84AV□□□5514□□0	70
0.4	1.7	-	9.5	263	412	3.0	363.179	GSS07-3M□□□063C32	E84AV□□□5514□□0	70
0.4	1.6	-	8.9	276	431	1.7	386.467	GSS06-3M□□□063C32	E84AV□□□5514□□0	70
0.4	1.5	-	8.7	287	453	2.7	394.245	GSS07-3M□□□063C32	E84AV□□□5514□□0	70
0.3	1.4	-	7.9	313	480	1.5	436.333	GSS06-3M□□□063C32	E84AV□□□5514□□0	70
0.3	1.4	-	7.7	326	503	2.4	445.116	GSS07-3M□□□063C32	E84AV□□□5514□□0	70
0.3	1.2	-	7.0	361	556	2.2	490.403	GSS07-3M□□□063C32	E84AV□□□5514□□0	70
0.3	1.2	-	6.9	359	550	1.3	497.722	GSS06-3M□□□063C32	E84AV□□□5514□□0	70
0.3	1.1	-	6.2	409	620	2.0	553.681	GSS07-3M□□□063C32	E84AV□□□5514□□0	70
0.3	1.1	-	6.1	406	612	1.2	561.944	GSS06-3M□□□063C32	E84AV□□□5514□□0	70
0.2	1.0	-	5.5	457	689	1.0	630.803	GSS06-3M□□□063C32	E84AV□□□5514□□0	70
0.2	1.0	-	5.4	472	715	1.7	634.639	GSS07-3M□□□063C32	E84AV□□□5514□□0	70
0.2	0.8	-	4.8	518	763	0.9	712.197	GSS06-3M□□□063C32	E84AV□□□5514□□0	70
0.2	0.8	-	4.8	535	795	1.6	716.528	GSS07-3M□□□063C32	E84AV□□□5514□□0	70
0.2	0.7	-	4.1	625	928	1.3	833.556	GSS07-3M□□□063C32	E84AV□□□5514□□0	70
0.2	0.6	-	3.7	708	1030	1.2	941.111	GSS07-3M□□□063C32	E84AV□□□5514□□0	70
0.1	0.6	-	3.4	762	1112	1.1	1011.633	GSS07-3M□□□063C32	E84AV□□□5514□□0	70
0.1	0.5	-	3.0	863	1232	1.0	1142.167	GSS07-3M□□□063C32	E84AV□□□5514□□0	70
0.1	0.5	-	2.8	929	1329	0.9	1227.755	GSS07-3M□□□063C32	E84AV□□□5514□□0	70



Selection tables

► 120 Hz: P_N = 0.75 kW

n_{22}/n_2 = 1 ... 24.0

n_1 = 141.7 ... 3400 r/min

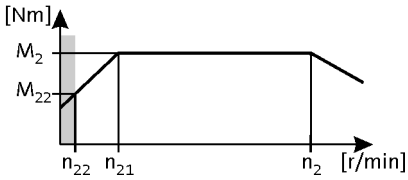

n_{22}	n_{21}		n_2	M_{22}	M_2	c	i			
[r/min]	[r/min]		[r/min]	[Nm]	[Nm]					
14	61	-	344	13	18	4.3	9.897	GSS04-2M□□□063C42	E84AV□□□7514□□0	62
13	55	-	314	14	20	3.8	10.827	GSS05-2M□□□063C42	E84AV□□□7514□□0	62
10	43	-	246	17	26	4.0	13.810	GSS04-2M□□□063C42	E84AV□□□7514□□0	62
8.9	38	-	214	19	29	4.3	15.869	GSS04-2M□□□063C42	E84AV□□□7514□□0	62
8.2	35	-	196	22	31	3.8	17.360	GSS05-2M□□□063C42	E84AV□□□7514□□0	62
6.4	27	-	154	26	40	3.7	22.143	GSS04-2M□□□063C42	E84AV□□□7514□□0	62
5.2	22	-	125	32	49	3.2	27.125	GSS04-2M□□□063C42	E84AV□□□7514□□0	62
4.5	19	-	107	34	54	2.5	31.738	GSS04-2M□□□063C42	E84AV□□□7514□□0	62
4.2	18	-	100	39	62	2.8	34.100	GSS04-2M□□□063C42	E84AV□□□7514□□0	62
3.6	15	-	87	41	65	2.1	39.200	GSS04-2M□□□063C42	E84AV□□□7514□□0	62
3.2	14	-	77	50	80	2.2	43.917	GSS04-2M□□□063C42	E84AV□□□7514□□0	62
3.2	14	-	77	51	80	3.0	43.917	GSS05-2M□□□063C42	E84AV□□□7514□□0	62
2.8	12	-	68	50	83	1.8	50.000	GSS04-2M□□□063C42	E84AV□□□7514□□0	62
2.8	12	-	68	51	83	3.0	50.000	GSS05-2M□□□063C42	E84AV□□□7514□□0	62
2.6	11	-	63	55	92	1.8	54.250	GSS04-2M□□□063C42	E84AV□□□7514□□0	62
2.3	9.8	-	56	60	101	1.6	61.250	GSS04-2M□□□063C42	E84AV□□□7514□□0	62
2.1	8.8	-	50	68	115	1.5	68.200	GSS04-2M□□□063C42	E84AV□□□7514□□0	62
2.0	8.5	-	48	71	121	2.4	70.611	GSS05-2M□□□063C42	E84AV□□□7514□□0	62
1.8	7.8	-	44	73	127	1.4	77.000	GSS04-2M□□□063C42	E84AV□□□7514□□0	62
1.8	7.5	-	43	78	134	2.2	79.722	GSS05-2M□□□063C42	E84AV□□□7514□□0	62
1.6	6.8	-	39	86	147	1.2	87.833	GSS04-2M□□□063C42	E84AV□□□7514□□0	62
1.6	6.8	-	39	86	151	2.1	87.833	GSS05-2M□□□063C42	E84AV□□□7514□□0	62
1.4	6.1	-	34	93	163	1.1	99.167	GSS04-2M□□□063C42	E84AV□□□7514□□0	62
1.4	6.1	-	34	94	167	1.9	99.167	GSS05-2M□□□063C42	E84AV□□□7514□□0	62
1.3	5.4	-	31	109	186	1.0	111.318	GSS04-2M□□□063C42	E84AV□□□7514□□0	62
1.3	5.3	-	30	112	196	1.8	113.667	GSS05-2M□□□063C42	E84AV□□□7514□□0	62
1.3	5.3	-	30	112	192	3.0	113.667	GSS06-2M□□□063C42	E84AV□□□7514□□0	62
1.1	4.8	-	27	119	229	1.2	125.476	GSS05-3M□□□063C42	E84AV□□□7514□□0	70
1.1	4.7	-	27	123	217	1.6	128.333	GSS05-2M□□□063C42	E84AV□□□7514□□0	62
1.1	4.7	-	27	126	214	3.0	128.333	GSS06-2M□□□063C42	E84AV□□□7514□□0	62
1.0	4.4	-	25	137	238	1.5	137.950	GSS05-2M□□□063C42	E84AV□□□7514□□0	62
1.0	4.4	-	25	136	232	2.6	137.950	GSS06-2M□□□063C42	E84AV□□□7514□□0	62
1.0	4.2	-	24	137	226	3.0	142.857	GSS06-3M□□□063C42	E84AV□□□7514□□0	70
0.9	3.9	-	22	146	279	1.0	153.708	GSS05-3M□□□063C42	E84AV□□□7514□□0	70
0.9	3.9	-	22	150	265	1.4	155.750	GSS05-2M□□□063C42	E84AV□□□7514□□0	62
0.9	3.9	-	22	153	259	2.6	155.750	GSS06-2M□□□063C42	E84AV□□□7514□□0	62
0.9	3.9	-	22	149	247	2.8	155.000	GSS06-3M□□□063C42	E84AV□□□7514□□0	70
0.8	3.4	-	20	172	292	2.1	174.375	GSS06-2M□□□063C42	E84AV□□□7514□□0	62
0.8	3.4	-	19	176	305	1.1	176.313	GSS05-2M□□□063C42	E84AV□□□7514□□0	62
0.8	3.4	-	19	169	276	2.6	175.000	GSS06-3M□□□063C42	E84AV□□□7514□□0	70
0.7	3.0	-	17	193	339	1.1	199.063	GSS05-2M□□□063C42	E84AV□□□7514□□0	62



Selection tables

► 120 Hz: P_N = 0.75 kW

n_{22}/n_2 = 1 ... 24.0

n_1 = 141.7 ... 3400 r/min

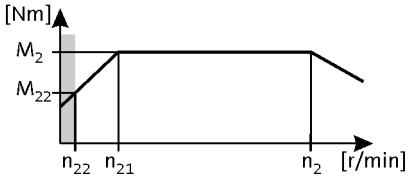

n_{22}	n_{21}		n_2	M_{22}	M_2	c	i			
[r/min]	[r/min]		[r/min]	[Nm]	[Nm]					
0.7	3.1	-	17	195	326	2.1	196.875	GSS06-2M□□□063C42	E84AV□□□7514□□0	62
0.7	3.1	-	17	188	310	2.3	194.857	GSS06-3M□□□063C42	E84AV□□□7514□□0	70
0.6	2.7	-	16	213	345	2.1	220.000	GSS06-3M□□□063C42	E84AV□□□7514□□0	70
0.6	2.7	-	15	212	372	1.0	222.133	GSS05-3M□□□063C42	E84AV□□□7514□□0	70
0.6	2.5	-	14	232	377	1.9	238.700	GSS06-3M□□□063C42	E84AV□□□7514□□0	70
0.6	2.4	-	14	244	397	3.1	247.139	GSS07-3M□□□063C42	E84AV□□□7514□□0	70
0.5	2.2	-	13	262	420	1.7	269.500	GSS06-3M□□□063C42	E84AV□□□7514□□0	70
0.5	2.2	-	12	277	444	2.8	279.028	GSS07-3M□□□063C42	E84AV□□□7514□□0	70
0.5	1.9	-	11	304	486	1.5	310.689	GSS06-3M□□□063C42	E84AV□□□7514□□0	70
0.4	1.9	-	11	321	516	2.4	321.673	GSS07-3M□□□063C42	E84AV□□□7514□□0	70
0.4	1.7	-	9.7	345	539	1.3	350.778	GSS06-3M□□□063C42	E84AV□□□7514□□0	70
0.4	1.7	-	9.4	365	574	2.1	363.179	GSS07-3M□□□063C42	E84AV□□□7514□□0	70
0.4	1.6	-	8.8	381	598	1.2	386.467	GSS06-3M□□□063C42	E84AV□□□7514□□0	70
0.4	1.5	-	8.6	397	631	2.0	394.245	GSS07-3M□□□063C42	E84AV□□□7514□□0	70
0.3	1.4	-	7.8	431	666	1.1	436.333	GSS06-3M□□□063C42	E84AV□□□7514□□0	70
0.3	1.4	-	7.6	451	700	1.8	445.116	GSS07-3M□□□063C42	E84AV□□□7514□□0	70
0.3	1.2	-	6.9	498	773	1.6	490.403	GSS07-3M□□□063C42	E84AV□□□7514□□0	70
0.3	1.2	-	6.8	493	762	0.9	497.722	GSS06-3M□□□063C42	E84AV□□□7514□□0	70
0.3	1.1	-	6.1	565	862	1.4	553.681	GSS07-3M□□□063C42	E84AV□□□7514□□0	70
0.2	1.0	-	5.4	650	993	1.3	634.639	GSS07-3M□□□063C42	E84AV□□□7514□□0	70
0.2	0.8	-	4.8	736	1104	1.1	716.528	GSS07-3M□□□063C42	E84AV□□□7514□□0	70
0.2	0.7	-	4.1	859	1287	1.0	833.556	GSS07-3M□□□063C42	E84AV□□□7514□□0	70



Selection tables

► 120 Hz: P_N = 1.10 kW

n_{22}/n_2 = 1 ... 24.0

n_1 = 145.4 ... 3490 r/min

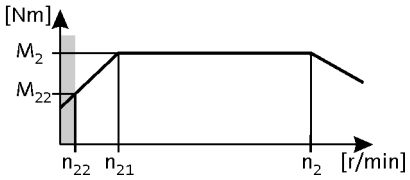

n_{22} [r/min]	n_{21} [r/min]		n_2 [r/min]	M_{22} [Nm]	M_2 [Nm]	c	i			
15	61	-	353	18	26	4.3	9.897	GSS04-2M□□□071C32	E84AV□□□1124□□0	62
13	55	-	322	20	28	4.3	10.827	GSS04-2M□□□071C32	E84AV□□□1124□□0	62
11	43	-	253	25	36	4.0	13.810	GSS04-2M□□□071C32	E84AV□□□1124□□0	62
9.2	38	-	220	28	41	3.2	15.869	GSS04-2M□□□071C32	E84AV□□□1124□□0	62
8.4	35	-	201	31	45	3.1	17.360	GSS04-2M□□□071C32	E84AV□□□1124□□0	62
6.6	27	-	158	39	58	2.6	22.143	GSS04-2M□□□071C32	E84AV□□□1124□□0	62
5.4	22	-	129	47	71	2.3	27.125	GSS04-2M□□□071C32	E84AV□□□1124□□0	62
4.6	19	-	110	51	78	1.7	31.738	GSS04-2M□□□071C32	E84AV□□□1124□□0	62
4.6	19	-	110	51	76	2.8	31.738	GSS05-2M□□□071C32	E84AV□□□1124□□0	62
4.3	18	-	102	59	89	1.9	34.100	GSS04-2M□□□071C32	E84AV□□□1124□□0	62
4.1	17	-	99	60	92	3.1	35.306	GSS05-2M□□□071C32	E84AV□□□1124□□0	62
3.7	15	-	89	61	94	1.5	39.200	GSS04-2M□□□071C32	E84AV□□□1124□□0	62
3.7	15	-	89	62	93	2.4	39.200	GSS05-2M□□□071C32	E84AV□□□1124□□0	62
3.3	14	-	80	75	115	1.6	43.917	GSS04-2M□□□071C32	E84AV□□□1124□□0	62
3.3	14	-	80	74	115	2.7	43.917	GSS05-2M□□□071C32	E84AV□□□1124□□0	62
2.9	12	-	70	75	120	1.3	50.000	GSS04-2M□□□071C32	E84AV□□□1124□□0	62
2.9	12	-	70	77	120	2.1	50.000	GSS05-2M□□□071C32	E84AV□□□1124□□0	62
2.7	11	-	64	82	132	1.2	54.250	GSS04-2M□□□071C32	E84AV□□□1124□□0	62
2.7	11	-	64	84	133	2.0	54.250	GSS05-2M□□□071C32	E84AV□□□1124□□0	62
2.4	9.8	-	57	90	146	1.1	61.250	GSS04-2M□□□071C32	E84AV□□□1124□□0	62
2.4	9.8	-	57	92	147	1.8	61.250	GSS05-2M□□□071C32	E84AV□□□1124□□0	62
2.1	8.8	-	51	101	165	1.1	68.200	GSS04-2M□□□071C32	E84AV□□□1124□□0	62
2.1	8.5	-	49	106	174	1.7	70.611	GSS05-2M□□□071C32	E84AV□□□1124□□0	62
1.9	7.8	-	45	109	182	1.0	77.000	GSS04-2M□□□071C32	E84AV□□□1124□□0	62
1.8	7.5	-	44	116	193	1.6	79.722	GSS05-2M□□□071C32	E84AV□□□1124□□0	62
1.8	7.5	-	44	119	192	3.0	79.722	GSS06-2M□□□071C32	E84AV□□□1124□□0	62
1.7	6.8	-	40	129	217	1.5	87.833	GSS05-2M□□□071C32	E84AV□□□1124□□0	62
1.7	6.8	-	40	129	213	2.9	87.833	GSS06-2M□□□071C32	E84AV□□□1124□□0	62
1.5	6.1	-	35	141	241	1.4	99.167	GSS05-2M□□□071C32	E84AV□□□1124□□0	62
1.5	6.1	-	35	145	239	2.6	99.167	GSS06-2M□□□071C32	E84AV□□□1124□□0	62
1.3	5.3	-	31	166	281	1.2	113.667	GSS05-2M□□□071C32	E84AV□□□1124□□0	62
1.3	5.3	-	31	166	276	2.5	113.667	GSS06-2M□□□071C32	E84AV□□□1124□□0	62
1.2	4.7	-	28	182	293	2.3	126.531	GSS06-3M□□□071C32	E84AV□□□1124□□0	70
1.1	4.7	-	27	182	312	1.2	128.333	GSS05-2M□□□071C32	E84AV□□□1124□□0	62
1.1	4.7	-	27	187	309	2.2	128.333	GSS06-2M□□□071C32	E84AV□□□1124□□0	62
1.1	4.4	-	25	203	342	1.1	137.950	GSS05-2M□□□071C32	E84AV□□□1124□□0	62
1.1	4.4	-	25	201	334	2.1	137.950	GSS06-2M□□□071C32	E84AV□□□1124□□0	62
1.0	4.2	-	24	205	327	2.1	142.857	GSS06-3M□□□071C32	E84AV□□□1124□□0	70
0.9	3.9	-	23	223	357	2.0	155.000	GSS06-3M□□□071C32	E84AV□□□1124□□0	70
0.9	3.9	-	22	222	380	0.9	155.750	GSS05-2M□□□071C32	E84AV□□□1124□□0	62
0.9	3.9	-	22	228	374	1.9	155.750	GSS06-2M□□□071C32	E84AV□□□1124□□0	62



Selection tables

► 120 Hz: P_N = 1.10 kW

n_{22}/n_2 = 1 ... 24.0

n_1 = 145.4 ... 3490 r/min

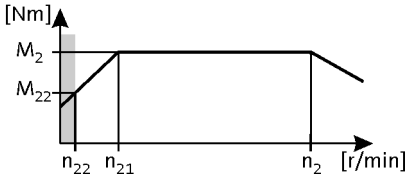

n_{22}	n_{21}		n_2	M_{22}	M_2	c	i			
[r/min]	[r/min]		[r/min]	[Nm]	[Nm]					
0.8	3.4	-	20	255	420	1.7	174.375	GSS06-2M□□□071C32	E84AV□□□1124□□0	62
0.8	3.4	-	20	252	399	1.8	175.000	GSS06-3M□□□071C32	E84AV□□□1124□□0	70
0.8	3.4	-	20	258	406	3.0	175.000	GSS07-3M□□□071C32	E84AV□□□1124□□0	70
0.7	3.1	-	18	289	469	1.5	196.875	GSS06-2M□□□071C32	E84AV□□□1124□□0	62
0.8	3.1	-	18	281	446	1.6	194.857	GSS06-3M□□□071C32	E84AV□□□1124□□0	70
0.7	3.0	-	17	298	470	2.6	201.746	GSS07-3M□□□071C32	E84AV□□□1124□□0	70
0.7	2.7	-	16	318	497	1.4	220.000	GSS06-3M□□□071C32	E84AV□□□1124□□0	70
0.6	2.5	-	15	345	543	1.3	238.700	GSS06-3M□□□071C32	E84AV□□□1124□□0	70
0.6	2.6	-	15	337	526	2.3	227.778	GSS07-3M□□□071C32	E84AV□□□1124□□0	70
0.6	2.4	-	14	366	574	2.1	247.139	GSS07-3M□□□071C32	E84AV□□□1124□□0	70
0.5	2.2	-	13	390	605	1.2	269.500	GSS06-3M□□□071C32	E84AV□□□1124□□0	70
0.5	2.2	-	13	414	641	1.9	279.028	GSS07-3M□□□071C32	E84AV□□□1124□□0	70
0.5	1.9	-	11	451	699	1.0	310.689	GSS06-3M□□□071C32	E84AV□□□1124□□0	70
0.5	1.9	-	11	479	744	1.7	321.673	GSS07-3M□□□071C32	E84AV□□□1124□□0	70
0.4	1.7	-	10	510	775	0.9	350.778	GSS06-3M□□□071C32	E84AV□□□1124□□0	70
0.4	1.7	-	9.6	543	827	1.5	363.179	GSS07-3M□□□071C32	E84AV□□□1124□□0	70
0.4	1.5	-	8.9	591	908	1.4	394.245	GSS07-3M□□□071C32	E84AV□□□1124□□0	70
0.3	1.4	-	7.8	669	1006	1.2	445.116	GSS07-3M□□□071C32	E84AV□□□1124□□0	70
0.3	1.2	-	7.1	739	1112	1.1	490.403	GSS07-3M□□□071C32	E84AV□□□1124□□0	70
0.3	1.1	-	6.3	837	1238	1.0	553.681	GSS07-3M□□□071C32	E84AV□□□1124□□0	70



Selection tables

► 120 Hz: P_N = 1.50 kW

n_{22}/n_2 = 1 ... 24.0

n_1 = 143.8 ... 3450 r/min

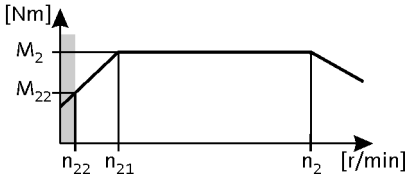

n_{22} [r/min]	n_{21} [r/min]		n_2 [r/min]	M_{22} [Nm]	M_2 [Nm]	c	i			
15	61	-	349	26	36	3.1	9.897	GSS04-2M□□□071C42	E84AV□□□1524□□0	62
13	55	-	319	28	40	3.1	10.827	GSS04-2M□□□071C42	E84AV□□□1524□□0	62
10	43	-	250	35	51	2.9	13.810	GSS04-2M□□□071C42	E84AV□□□1524□□0	62
9.1	38	-	217	39	58	2.3	15.869	GSS04-2M□□□071C42	E84AV□□□1524□□0	62
8.3	35	-	199	43	63	2.2	17.360	GSS04-2M□□□071C42	E84AV□□□1524□□0	62
6.5	27	-	156	54	80	1.9	22.143	GSS04-2M□□□071C42	E84AV□□□1524□□0	62
6.5	27	-	156	54	80	3.1	22.143	GSS05-2M□□□071C42	E84AV□□□1524□□0	62
5.3	22	-	127	65	99	1.6	27.125	GSS04-2M□□□071C42	E84AV□□□1524□□0	62
5.3	22	-	127	65	98	2.7	27.125	GSS05-2M□□□071C42	E84AV□□□1524□□0	62
4.5	19	-	109	70	108	1.3	31.738	GSS04-2M□□□071C42	E84AV□□□1524□□0	62
4.5	19	-	109	71	106	2.0	31.738	GSS05-2M□□□071C42	E84AV□□□1524□□0	62
4.2	18	-	101	81	124	1.4	34.100	GSS04-2M□□□071C42	E84AV□□□1524□□0	62
4.1	17	-	98	84	128	2.2	35.306	GSS05-2M□□□071C42	E84AV□□□1524□□0	62
3.7	15	-	88	84	130	1.1	39.200	GSS04-2M□□□071C42	E84AV□□□1524□□0	62
3.7	15	-	88	85	129	1.8	39.200	GSS05-2M□□□071C42	E84AV□□□1524□□0	62
3.3	14	-	79	102	159	1.1	43.917	GSS04-2M□□□071C42	E84AV□□□1524□□0	62
3.3	14	-	79	103	160	1.9	43.917	GSS05-2M□□□071C42	E84AV□□□1524□□0	62
3.3	14	-	79	105	159	2.8	43.917	GSS06-2M□□□071C42	E84AV□□□1524□□0	62
2.9	12	-	69	103	166	0.9	50.000	GSS04-2M□□□071C42	E84AV□□□1524□□0	62
2.9	12	-	69	106	166	1.5	50.000	GSS05-2M□□□071C42	E84AV□□□1524□□0	62
2.9	12	-	69	108	168	2.9	50.000	GSS06-2M□□□071C42	E84AV□□□1524□□0	62
2.7	11	-	64	116	184	1.4	54.250	GSS05-2M□□□071C42	E84AV□□□1524□□0	62
2.4	9.8	-	56	127	205	1.3	61.250	GSS05-2M□□□071C42	E84AV□□□1524□□0	62
2.0	8.5	-	49	146	241	1.2	70.611	GSS05-2M□□□071C42	E84AV□□□1524□□0	62
2.0	8.5	-	49	147	239	2.4	70.611	GSS06-2M□□□071C42	E84AV□□□1524□□0	62
1.8	7.5	-	43	160	267	1.1	79.722	GSS05-2M□□□071C42	E84AV□□□1524□□0	62
1.8	7.5	-	43	165	268	2.2	79.722	GSS06-2M□□□071C42	E84AV□□□1524□□0	62
1.6	6.8	-	39	177	300	1.1	87.833	GSS05-2M□□□071C42	E84AV□□□1524□□0	62
1.6	6.8	-	39	179	297	2.1	87.833	GSS06-2M□□□071C42	E84AV□□□1524□□0	62
1.5	6.1	-	35	193	333	1.0	99.167	GSS05-2M□□□071C42	E84AV□□□1524□□0	62
1.5	6.1	-	35	201	333	1.9	99.167	GSS06-2M□□□071C42	E84AV□□□1524□□0	62
1.3	5.3	-	30	229	390	0.9	113.667	GSS05-2M□□□071C42	E84AV□□□1524□□0	62
1.3	5.3	-	30	230	384	1.8	113.667	GSS06-2M□□□071C42	E84AV□□□1524□□0	62
1.1	4.7	-	27	259	429	1.6	128.333	GSS06-2M□□□071C42	E84AV□□□1524□□0	62
1.1	4.7	-	27	251	407	1.7	126.531	GSS06-3M□□□071C42	E84AV□□□1524□□0	70
1.1	4.7	-	27	260	412	3.0	126.531	GSS07-3M□□□071C42	E84AV□□□1524□□0	70
1.0	4.4	-	25	278	464	1.5	137.950	GSS06-2M□□□071C42	E84AV□□□1524□□0	62
1.0	4.2	-	24	283	455	1.5	142.857	GSS06-3M□□□071C42	E84AV□□□1524□□0	70
1.0	4.2	-	24	293	462	2.7	142.857	GSS07-3M□□□071C42	E84AV□□□1524□□0	70
0.9	3.9	-	22	308	497	1.4	155.000	GSS06-3M□□□071C42	E84AV□□□1524□□0	70
0.9	3.9	-	22	314	519	1.4	155.750	GSS06-2M□□□071C42	E84AV□□□1524□□0	62



Selection tables

► 120 Hz: P_N = 1.50 kW

n_{22}/n_2 = 1 ... 24.0

n_1 = 143.8 ... 3450 r/min

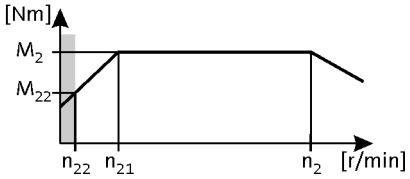

n_{22} [r/min]	n_{21} [r/min]		n_2 [r/min]	M_{22} [Nm]	M_2 [Nm]	c	i			
0.9	3.9	-	22	318	504	2.4	155.000	GSS07-3M□□□071C42	E84AV□□□1524□□0	70
0.8	3.4	-	20	351	583	1.2	174.375	GSS06-2M□□□071C42	E84AV□□□1524□□0	62
0.8	3.4	-	20	347	553	1.3	175.000	GSS06-3M□□□071C42	E84AV□□□1524□□0	70
0.8	3.4	-	20	358	565	2.2	175.000	GSS07-3M□□□071C42	E84AV□□□1524□□0	70
0.7	3.1	-	18	397	650	1.1	196.875	GSS06-2M□□□071C42	E84AV□□□1524□□0	62
0.7	3.1	-	18	387	619	1.2	194.857	GSS06-3M□□□071C42	E84AV□□□1524□□0	70
0.7	3.0	-	17	413	654	1.9	201.746	GSS07-3M□□□071C42	E84AV□□□1524□□0	70
0.7	2.7	-	16	437	690	1.0	220.000	GSS06-3M□□□071C42	E84AV□□□1524□□0	70
0.6	2.5	-	15	474	752	1.0	238.700	GSS06-3M□□□071C42	E84AV□□□1524□□0	70
0.6	2.6	-	15	465	732	1.7	227.778	GSS07-3M□□□071C42	E84AV□□□1524□□0	70
0.6	2.4	-	14	504	798	1.6	247.139	GSS07-3M□□□071C42	E84AV□□□1524□□0	70
0.5	2.2	-	12	570	891	1.4	279.028	GSS07-3M□□□071C42	E84AV□□□1524□□0	70
0.5	1.9	-	11	660	1033	1.2	321.673	GSS07-3M□□□071C42	E84AV□□□1524□□0	70
0.4	1.7	-	9.5	747	1147	1.1	363.179	GSS07-3M□□□071C42	E84AV□□□1524□□0	70
0.4	1.5	-	8.8	813	1259	1.0	394.245	GSS07-3M□□□071C42	E84AV□□□1524□□0	70



Selection tables

► 120 Hz: P_N = 2.20 kW

n_{22}/n_2 = 1 ... 24.0

n_1 = 145.8 ... 3500 r/min

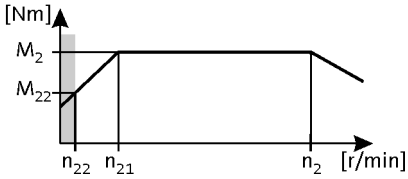

n_{22} [r/min]	n_{21} [r/min]		n_2 [r/min]	M_{22} [Nm]	M_2 [Nm]	c	i			
15	61	-	354	37	53	2.2	9.897	GSS04-2M□□□080C32	E84AV□□□2224□□0	62
14	55	-	323	41	58	2.1	10.827	GSS04-2M□□□080C32	E84AV□□□2224□□0	62
14	55	-	323	40	58	3.2	10.827	GSS05-2M□□□080C32	E84AV□□□2224□□0	62
11	43	-	253	51	74	2.0	13.810	GSS04-2M□□□080C32	E84AV□□□2224□□0	62
11	43	-	253	51	74	3.0	13.810	GSS05-2M□□□080C32	E84AV□□□2224□□0	62
9.2	38	-	221	57	84	1.6	15.869	GSS04-2M□□□080C32	E84AV□□□2224□□0	62
9.2	38	-	221	56	83	2.6	15.869	GSS05-2M□□□080C32	E84AV□□□2224□□0	62
8.4	35	-	202	62	92	1.5	17.360	GSS04-2M□□□080C32	E84AV□□□2224□□0	62
8.4	35	-	202	62	91	2.5	17.360	GSS05-2M□□□080C32	E84AV□□□2224□□0	62
6.6	27	-	158	78	117	1.3	22.143	GSS04-2M□□□080C32	E84AV□□□2224□□0	62
6.6	27	-	158	78	116	2.1	22.143	GSS05-2M□□□080C32	E84AV□□□2224□□0	62
5.4	22	-	129	94	143	1.1	27.125	GSS04-2M□□□080C32	E84AV□□□2224□□0	62
5.4	22	-	129	95	143	1.8	27.125	GSS05-2M□□□080C32	E84AV□□□2224□□0	62
4.6	19	-	110	103	155	1.4	31.738	GSS05-2M□□□080C32	E84AV□□□2224□□0	62
4.6	19	-	110	102	158	2.3	31.738	GSS06-2M□□□080C32	E84AV□□□2224□□0	62
4.1	17	-	99	121	187	1.5	35.306	GSS05-2M□□□080C32	E84AV□□□2224□□0	62
4.1	17	-	99	120	185	3.1	35.306	GSS06-2M□□□080C32	E84AV□□□2224□□0	62
3.7	15	-	89	124	188	1.2	39.200	GSS05-2M□□□080C32	E84AV□□□2224□□0	62
3.7	15	-	89	126	193	2.1	39.200	GSS06-2M□□□080C32	E84AV□□□2224□□0	62
3.3	14	-	80	148	233	1.3	43.917	GSS05-2M□□□080C32	E84AV□□□2224□□0	62
3.3	14	-	80	148	231	2.7	43.917	GSS06-2M□□□080C32	E84AV□□□2224□□0	62
2.9	12	-	70	153	242	1.0	50.000	GSS05-2M□□□080C32	E84AV□□□2224□□0	62
2.9	12	-	70	157	246	2.0	50.000	GSS06-2M□□□080C32	E84AV□□□2224□□0	62
2.9	12	-	70	161	248	3.0	50.000	GSS07-2M□□□080C32	E84AV□□□2224□□0	62
2.7	11	-	65	167	268	1.0	54.250	GSS05-2M□□□080C32	E84AV□□□2224□□0	62
2.7	11	-	65	169	269	2.0	54.250	GSS06-2M□□□080C32	E84AV□□□2224□□0	62
2.4	9.8	-	57	184	297	0.9	61.250	GSS05-2M□□□080C32	E84AV□□□2224□□0	62
2.4	9.8	-	57	190	301	1.8	61.250	GSS06-2M□□□080C32	E84AV□□□2224□□0	62
2.1	8.5	-	50	214	349	1.7	70.611	GSS06-2M□□□080C32	E84AV□□□2224□□0	62
2.1	8.5	-	50	223	352	2.8	70.611	GSS07-2M□□□080C32	E84AV□□□2224□□0	62
1.8	7.5	-	44	240	391	1.5	79.722	GSS06-2M□□□080C32	E84AV□□□2224□□0	62
1.8	7.5	-	44	250	394	2.7	79.722	GSS07-2M□□□080C32	E84AV□□□2224□□0	62
1.7	6.8	-	40	260	433	1.5	87.833	GSS06-2M□□□080C32	E84AV□□□2224□□0	62
1.7	6.9	-	40	269	432	2.7	86.542	GSS07-2M□□□080C32	E84AV□□□2224□□0	62
1.5	6.1	-	36	302	484	2.4	97.708	GSS07-2M□□□080C32	E84AV□□□2224□□0	62
1.5	6.1	-	35	291	485	1.3	99.167	GSS06-2M□□□080C32	E84AV□□□2224□□0	62
1.3	5.3	-	31	332	559	1.2	113.667	GSS06-2M□□□080C32	E84AV□□□2224□□0	62
1.3	5.3	-	31	347	567	2.2	113.667	GSS07-2M□□□080C32	E84AV□□□2224□□0	62
1.2	4.7	-	28	363	593	1.2	126.531	GSS06-3M□□□080C32	E84AV□□□2224□□0	70
1.2	4.7	-	28	379	602	2.1	126.531	GSS07-3M□□□080C32	E84AV□□□2224□□0	70
1.1	4.7	-	27	374	625	1.1	128.333	GSS06-2M□□□080C32	E84AV□□□2224□□0	62



Selection tables

► 120 Hz: P_N = 2.20 kW

n_{22}/n_2 = 1 ... 24.0

n_1 = 145.8 ... 3500 r/min

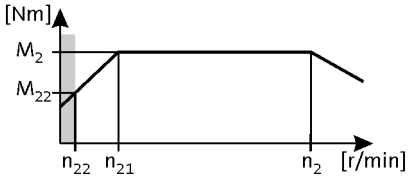

n_{22} [r/min]	n_{21} [r/min]		n_2 [r/min]	M_{22} [Nm]	M_2 [Nm]	c	i			
1.1	4.7	-	27	391	635	1.9	128.333	GSS07-2M□□□080C32	E84AV□□□2224□□0	62
1.1	4.4	-	25	401	675	1.1	137.950	GSS06-2M□□□080C32	E84AV□□□2224□□0	62
1.0	4.2	-	25	409	662	1.1	142.857	GSS06-3M□□□080C32	E84AV□□□2224□□0	70
1.1	4.4	-	25	417	687	1.8	137.950	GSS07-2M□□□080C32	E84AV□□□2224□□0	62
1.0	4.2	-	25	426	674	1.8	142.857	GSS07-3M□□□080C32	E84AV□□□2224□□0	70
0.9	3.9	-	23	453	754	1.0	155.750	GSS06-2M□□□080C32	E84AV□□□2224□□0	62
0.9	3.9	-	23	444	722	1.0	155.000	GSS06-3M□□□080C32	E84AV□□□2224□□0	70
0.9	3.9	-	23	471	770	1.6	155.750	GSS07-2M□□□080C32	E84AV□□□2224□□0	62
0.9	3.9	-	23	461	735	1.7	155.000	GSS07-3M□□□080C32	E84AV□□□2224□□0	70
0.8	3.4	-	20	522	864	1.4	174.375	GSS07-2M□□□080C32	E84AV□□□2224□□0	62
0.8	3.4	-	20	519	824	1.5	175.000	GSS07-3M□□□080C32	E84AV□□□2224□□0	70
0.7	3.1	-	18	592	968	1.3	196.875	GSS07-2M□□□080C32	E84AV□□□2224□□0	62
0.7	3.0	-	17	597	952	1.3	201.746	GSS07-3M□□□080C32	E84AV□□□2224□□0	70
0.6	2.6	-	15	672	1065	1.2	227.778	GSS07-3M□□□080C32	E84AV□□□2224□□0	70
0.6	2.4	-	14	728	1160	1.1	247.139	GSS07-3M□□□080C32	E84AV□□□2224□□0	70
0.5	2.2	-	13	822	1295	1.0	279.028	GSS07-3M□□□080C32	E84AV□□□2224□□0	70



Selection tables

► 120 Hz: P_N = 3.00 kW

n_{22}/n_2 = 1 ... 24.0

n_1 = 145.0 ... 3480 r/min

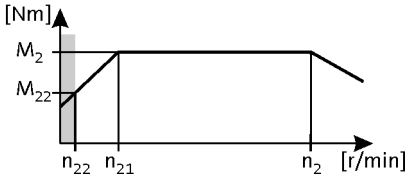

n_{22} [r/min]	n_{21} [r/min]		n_2 [r/min]	M_{22} [Nm]	M_2 [Nm]	c	i			
15	91	-	352	52	73	1.6	9.897	GSS04-2M□□□080C42	E84AV□□□3024□□0	62
15	91	-	352	51	73	2.4	9.897	GSS05-2M□□□080C42	E84AV□□□3024□□0	62
13	83	-	321	56	80	1.6	10.827	GSS04-2M□□□080C42	E84AV□□□3024□□0	62
13	83	-	321	56	80	2.4	10.827	GSS05-2M□□□080C42	E84AV□□□3024□□0	62
11	65	-	252	71	102	1.5	13.810	GSS04-2M□□□080C42	E84AV□□□3024□□0	62
11	65	-	252	71	102	2.2	13.810	GSS05-2M□□□080C42	E84AV□□□3024□□0	62
9.1	57	-	219	79	116	1.2	15.869	GSS04-2M□□□080C42	E84AV□□□3024□□0	62
9.1	57	-	219	79	114	1.9	15.869	GSS05-2M□□□080C42	E84AV□□□3024□□0	62
9.1	57	-	219	79	115	2.8	15.869	GSS06-2M□□□080C42	E84AV□□□3024□□0	62
8.4	52	-	201	86	127	1.1	17.360	GSS04-2M□□□080C42	E84AV□□□3024□□0	62
8.4	52	-	201	86	125	1.8	17.360	GSS05-2M□□□080C42	E84AV□□□3024□□0	62
8.4	52	-	201	86	126	2.8	17.360	GSS06-2M□□□080C42	E84AV□□□3024□□0	62
6.6	41	-	157	108	161	1.0	22.143	GSS04-2M□□□080C42	E84AV□□□3024□□0	62
6.6	41	-	157	108	161	1.5	22.143	GSS05-2M□□□080C42	E84AV□□□3024□□0	62
6.6	41	-	157	108	161	2.6	22.143	GSS06-2M□□□080C42	E84AV□□□3024□□0	62
5.4	33	-	128	131	197	1.3	27.125	GSS05-2M□□□080C42	E84AV□□□3024□□0	62
5.4	33	-	128	131	197	2.4	27.125	GSS06-2M□□□080C42	E84AV□□□3024□□0	62
4.6	28	-	110	143	213	1.0	31.738	GSS05-2M□□□080C42	E84AV□□□3024□□0	62
4.6	28	-	110	144	218	1.7	31.738	GSS06-2M□□□080C42	E84AV□□□3024□□0	62
4.1	26	-	99	168	258	1.1	35.306	GSS05-2M□□□080C42	E84AV□□□3024□□0	62
4.1	26	-	99	168	256	2.3	35.306	GSS06-2M□□□080C42	E84AV□□□3024□□0	62
3.7	23	-	89	176	267	1.6	39.200	GSS06-2M□□□080C42	E84AV□□□3024□□0	62
3.4	21	-	80	212	314	2.8	43.271	GSS07-2M□□□080C42	E84AV□□□3024□□0	62
3.3	21	-	79	205	321	1.0	43.917	GSS05-2M□□□080C42	E84AV□□□3024□□0	62
3.3	21	-	79	207	319	1.9	43.917	GSS06-2M□□□080C42	E84AV□□□3024□□0	62
2.9	18	-	70	219	340	1.5	50.000	GSS06-2M□□□080C42	E84AV□□□3024□□0	62
2.9	18	-	70	226	343	2.2	50.000	GSS07-2M□□□080C42	E84AV□□□3024□□0	62
2.7	17	-	64	235	371	1.4	54.250	GSS06-2M□□□080C42	E84AV□□□3024□□0	62
2.4	15	-	57	263	415	1.3	61.250	GSS06-2M□□□080C42	E84AV□□□3024□□0	62
2.1	13	-	49	297	481	1.2	70.611	GSS06-2M□□□080C42	E84AV□□□3024□□0	62
2.1	13	-	49	311	488	2.1	70.611	GSS07-2M□□□080C42	E84AV□□□3024□□0	62
1.8	11	-	44	333	539	1.1	79.722	GSS06-2M□□□080C42	E84AV□□□3024□□0	62
1.8	11	-	44	349	545	2.0	79.722	GSS07-2M□□□080C42	E84AV□□□3024□□0	62
1.7	10	-	40	360	597	1.1	87.833	GSS06-2M□□□080C42	E84AV□□□3024□□0	62
1.7	10	-	40	374	597	1.9	86.542	GSS07-2M□□□080C42	E84AV□□□3024□□0	62
1.5	9.2	-	36	419	668	1.8	97.708	GSS07-2M□□□080C42	E84AV□□□3024□□0	62
1.5	9.1	-	35	403	668	1.0	99.167	GSS06-2M□□□080C42	E84AV□□□3024□□0	62
1.3	7.9	-	31	459	770	0.9	113.667	GSS06-2M□□□080C42	E84AV□□□3024□□0	62
1.3	7.9	-	31	481	783	1.6	113.667	GSS07-2M□□□080C42	E84AV□□□3024□□0	62
1.2	7.1	-	28	526	831	1.5	126.531	GSS07-3M□□□080C42	E84AV□□□3024□□0	70
1.1	7.0	-	27	542	876	1.4	128.333	GSS07-2M□□□080C42	E84AV□□□3024□□0	62



Selection tables

► 120 Hz: P_N = 3.00 kW

n_{22}/n_2 = 1 ... 24.0

n_1 = 145.0 ... 3480 r/min

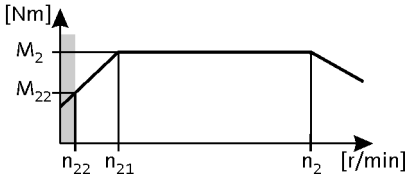

n_{22} [r/min]	n_{21} [r/min]		n_2 [r/min]	M_{22} [Nm]	M_2 [Nm]	c	i			
1.1	6.5	-	25	578	947	1.3	137.950	GSS07-2M□□□080C42	E84AV□□□3024□□0	62
1.0	6.3	-	24	591	930	1.3	142.857	GSS07-3M□□□080C42	E84AV□□□3024□□0	70
0.9	5.8	-	23	639	1014	1.2	155.000	GSS07-3M□□□080C42	E84AV□□□3024□□0	70
0.9	5.8	-	22	652	1061	1.2	155.750	GSS07-2M□□□080C42	E84AV□□□3024□□0	62
0.8	5.2	-	20	722	1191	1.0	174.375	GSS07-2M□□□080C42	E84AV□□□3024□□0	62
0.8	5.1	-	20	718	1136	1.1	175.000	GSS07-3M□□□080C42	E84AV□□□3024□□0	70
0.7	4.6	-	18	818	1333	0.9	196.875	GSS07-2M□□□080C42	E84AV□□□3024□□0	62
0.7	4.5	-	17	825	1311	1.0	201.746	GSS07-3M□□□080C42	E84AV□□□3024□□0	70



Selection tables

► 120 Hz: P_N = 4.00 kW

n_{22}/n_2 = 1 ... 24.0

n_1 = 145.0 ... 3480 r/min

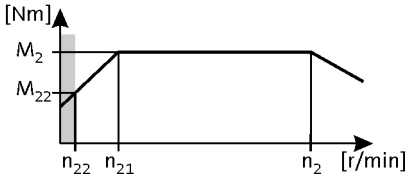

n_{22} [r/min]	n_{21} [r/min]		n_2 [r/min]	M_{22} [Nm]	M_2 [Nm]	c	i			
15	61	-	352	65	98	1.2	9.897	GSS04-2M□□□090C32	E84AV□□□4024□□0	62
15	61	-	352	64	98	1.8	9.897	GSS05-2M□□□090C32	E84AV□□□4024□□0	62
14	59	-	340	67	101	2.8	10.238	GSS06-2M□□□090C32	E84AV□□□4024□□0	62
13	55	-	321	70	107	1.2	10.827	GSS04-2M□□□090C32	E84AV□□□4024□□0	62
13	55	-	321	71	107	1.8	10.827	GSS05-2M□□□090C32	E84AV□□□4024□□0	62
13	54	-	311	73	110	2.7	11.200	GSS06-2M□□□090C32	E84AV□□□4024□□0	62
11	43	-	252	89	137	1.1	13.810	GSS04-2M□□□090C32	E84AV□□□4024□□0	62
11	43	-	252	89	137	1.6	13.810	GSS05-2M□□□090C32	E84AV□□□4024□□0	62
10	42	-	244	91	142	2.5	14.286	GSS06-2M□□□090C32	E84AV□□□4024□□0	62
9.1	38	-	219	99	153	1.4	15.869	GSS05-2M□□□090C32	E84AV□□□4024□□0	62
9.1	38	-	219	99	155	2.1	15.869	GSS06-2M□□□090C32	E84AV□□□4024□□0	62
8.4	35	-	201	108	168	1.4	17.360	GSS05-2M□□□090C32	E84AV□□□4024□□0	62
8.4	35	-	201	107	169	2.1	17.360	GSS06-2M□□□090C32	E84AV□□□4024□□0	62
6.6	27	-	157	136	215	1.2	22.143	GSS05-2M□□□090C32	E84AV□□□4024□□0	62
6.6	27	-	157	135	216	1.9	22.143	GSS06-2M□□□090C32	E84AV□□□4024□□0	62
6.6	27	-	157	139	215	2.9	22.143	GSS07-2M□□□090C32	E84AV□□□4024□□0	62
5.4	22	-	128	164	264	1.0	27.125	GSS05-2M□□□090C32	E84AV□□□4024□□0	62
5.4	22	-	128	165	264	1.8	27.125	GSS06-2M□□□090C32	E84AV□□□4024□□0	62
4.6	19	-	110	181	292	1.3	31.738	GSS06-2M□□□090C32	E84AV□□□4024□□0	62
4.1	17	-	99	211	344	1.7	35.306	GSS06-2M□□□090C32	E84AV□□□4024□□0	62
4.1	17	-	99	217	344	2.6	35.306	GSS07-2M□□□090C32	E84AV□□□4024□□0	62
3.7	15	-	89	221	357	1.2	39.200	GSS06-2M□□□090C32	E84AV□□□4024□□0	62
3.4	14	-	80	263	421	2.4	43.271	GSS07-2M□□□090C32	E84AV□□□4024□□0	62
3.3	14	-	79	259	427	1.5	43.917	GSS06-2M□□□090C32	E84AV□□□4024□□0	62
2.9	12	-	70	275	455	1.1	50.000	GSS06-2M□□□090C32	E84AV□□□4024□□0	62
2.9	12	-	70	285	460	1.7	50.000	GSS07-2M□□□090C32	E84AV□□□4024□□0	62
2.7	11	-	64	295	497	1.1	54.250	GSS06-2M□□□090C32	E84AV□□□4024□□0	62
2.4	9.8	-	57	330	556	1.0	61.250	GSS06-2M□□□090C32	E84AV□□□4024□□0	62
2.1	8.5	-	49	372	644	0.9	70.611	GSS06-2M□□□090C32	E84AV□□□4024□□0	62
2.1	8.5	-	49	391	654	1.6	70.611	GSS07-2M□□□090C32	E84AV□□□4024□□0	62
1.8	7.5	-	44	438	731	1.5	79.722	GSS07-2M□□□090C32	E84AV□□□4024□□0	62
1.7	6.9	-	40	469	801	1.5	86.542	GSS07-2M□□□090C32	E84AV□□□4024□□0	62
1.5	6.1	-	36	526	896	1.3	97.708	GSS07-2M□□□090C32	E84AV□□□4024□□0	62
1.3	5.3	-	31	603	1049	1.2	113.667	GSS07-2M□□□090C32	E84AV□□□4024□□0	62
1.2	4.7	-	28	658	1113	1.1	126.531	GSS07-3M□□□090C32	E84AV□□□4024□□0	70
1.1	4.7	-	27	678	1173	1.1	128.333	GSS07-2M□□□090C32	E84AV□□□4024□□0	62
1.1	4.4	-	25	723	1268	1.0	137.950	GSS07-2M□□□090C32	E84AV□□□4024□□0	62
1.0	4.2	-	24	739	1246	1.0	142.857	GSS07-3M□□□090C32	E84AV□□□4024□□0	70
0.9	3.9	-	23	799	1357	0.9	155.000	GSS07-3M□□□090C32	E84AV□□□4024□□0	70



Selection tables

► 120 Hz: P_N = 5.50 kW

n_{22}/n_2 = 1 ... 24.0

n_1 = 146.9 ... 3525 r/min

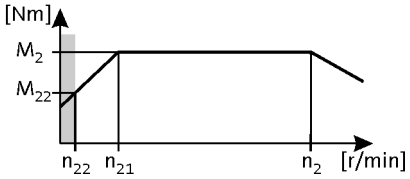

n_{22} [r/min]	n_{21} [r/min]		n_2 [r/min]	M_{22} [Nm]	M_2 [Nm]	c	i			
15	61	-	356	89	133	1.3	9.897	GSS05-2M□□□100C12	E84AV□□□5524□□0	62
15	60	-	353	88	135	3.0	10.000	GSS07-2M□□□100C12	E84AV□□□5524□□0	62
14	59	-	344	91	138	2.0	10.238	GSS06-2M□□□100C12	E84AV□□□5524□□0	62
14	55	-	326	97	146	1.3	10.827	GSS05-2M□□□100C12	E84AV□□□5524□□0	62
13	54	-	315	99	151	2.0	11.200	GSS06-2M□□□100C12	E84AV□□□5524□□0	62
13	54	-	315	98	151	3.0	11.200	GSS07-2M□□□100C12	E84AV□□□5524□□0	62
11	43	-	255	122	187	1.2	13.810	GSS05-2M□□□100C12	E84AV□□□5524□□0	62
10	42	-	247	126	194	1.8	14.286	GSS06-2M□□□100C12	E84AV□□□5524□□0	62
10	42	-	247	125	194	2.8	14.286	GSS07-2M□□□100C12	E84AV□□□5524□□0	62
9.5	39	-	227	131	206	2.4	15.500	GSS07-2M□□□100C12	E84AV□□□5524□□0	62
9.3	38	-	222	136	208	1.1	15.869	GSS05-2M□□□100C12	E84AV□□□5524□□0	62
9.3	38	-	222	135	211	1.6	15.869	GSS06-2M□□□100C12	E84AV□□□5524□□0	62
8.5	35	-	203	148	229	1.0	17.360	GSS05-2M□□□100C12	E84AV□□□5524□□0	62
8.5	35	-	203	148	231	1.5	17.360	GSS06-2M□□□100C12	E84AV□□□5524□□0	62
8.5	35	-	203	146	231	2.3	17.360	GSS07-2M□□□100C12	E84AV□□□5524□□0	62
6.6	27	-	159	187	295	1.4	22.143	GSS06-2M□□□100C12	E84AV□□□5524□□0	62
6.6	27	-	159	187	295	2.1	22.143	GSS07-2M□□□100C12	E84AV□□□5524□□0	62
5.4	22	-	130	227	361	1.4	27.125	GSS06-2M□□□100C12	E84AV□□□5524□□0	62
5.4	22	-	130	229	361	2.0	27.125	GSS07-2M□□□100C12	E84AV□□□5524□□0	62
4.7	19	-	114	249	392	1.4	31.000	GSS07-2M□□□100C12	E84AV□□□5524□□0	62
4.6	19	-	111	249	398	0.9	31.738	GSS06-2M□□□100C12	E84AV□□□5524□□0	62
4.2	17	-	100	290	469	1.2	35.306	GSS06-2M□□□100C12	E84AV□□□5524□□0	62
4.2	17	-	100	297	470	1.9	35.306	GSS07-2M□□□100C12	E84AV□□□5524□□0	62
3.8	15	-	90	313	492	1.3	39.200	GSS07-2M□□□100C12	E84AV□□□5524□□0	62
3.4	14	-	82	360	576	1.8	43.271	GSS07-2M□□□100C12	E84AV□□□5524□□0	62
3.3	14	-	80	355	583	1.1	43.917	GSS06-2M□□□100C12	E84AV□□□5524□□0	62
2.9	12	-	71	393	628	1.2	50.000	GSS07-2M□□□100C12	E84AV□□□5524□□0	62
2.7	11	-	65	422	687	1.2	54.250	GSS07-2M□□□100C12	E84AV□□□5524□□0	62
2.4	9.8	-	58	474	768	1.2	61.250	GSS07-2M□□□100C12	E84AV□□□5524□□0	62
2.1	8.5	-	50	537	892	1.1	70.611	GSS07-2M□□□100C12	E84AV□□□5524□□0	62
1.8	7.5	-	44	601	997	1.1	79.722	GSS07-2M□□□100C12	E84AV□□□5524□□0	62
1.7	6.9	-	41	644	1092	1.1	86.542	GSS07-2M□□□100C12	E84AV□□□5524□□0	62
1.5	6.1	-	36	720	1221	1.0	97.708	GSS07-2M□□□100C12	E84AV□□□5524□□0	62



Selection tables

► 120 Hz: P_N = 7.50 kW

n_{22}/n_2 = 1 ... 24.0

n_1 = 146.5 ... 3515 r/min

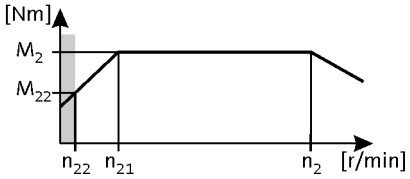

n_{22} [r/min]	n_{21} [r/min]		n_2 [r/min]	M_{22} [Nm]	M_2 [Nm]	c	i			
15	61	-	355	122	183	1.0	9.897	GSS05-2M□□□100C32	E84AV□□□7524□□0	62
15	60	-	352	123	186	2.2	10.000	GSS07-2M□□□100C32	E84AV□□□7524□□0	62
14	59	-	343	126	190	1.5	10.238	GSS06-2M□□□100C32	E84AV□□□7524□□0	62
14	55	-	325	133	201	1.0	10.827	GSS05-2M□□□100C32	E84AV□□□7524□□0	62
13	54	-	314	138	208	1.5	11.200	GSS06-2M□□□100C32	E84AV□□□7524□□0	62
13	54	-	314	137	209	2.2	11.200	GSS07-2M□□□100C32	E84AV□□□7524□□0	62
10	42	-	246	174	266	1.3	14.286	GSS06-2M□□□100C32	E84AV□□□7524□□0	62
10	42	-	246	175	267	2.0	14.286	GSS07-2M□□□100C32	E84AV□□□7524□□0	62
9.5	39	-	227	184	283	1.7	15.500	GSS07-2M□□□100C32	E84AV□□□7524□□0	62
9.2	38	-	222	187	290	1.1	15.869	GSS06-2M□□□100C32	E84AV□□□7524□□0	62
8.4	35	-	203	205	318	1.1	17.360	GSS06-2M□□□100C32	E84AV□□□7524□□0	62
8.4	35	-	203	205	318	1.7	17.360	GSS07-2M□□□100C32	E84AV□□□7524□□0	62
6.6	27	-	159	258	405	1.0	22.143	GSS06-2M□□□100C32	E84AV□□□7524□□0	62
6.6	27	-	159	261	406	1.6	22.143	GSS07-2M□□□100C32	E84AV□□□7524□□0	62
5.4	22	-	130	313	496	1.0	27.125	GSS06-2M□□□100C32	E84AV□□□7524□□0	62
5.4	22	-	130	319	497	1.5	27.125	GSS07-2M□□□100C32	E84AV□□□7524□□0	62
4.7	19	-	113	346	538	1.1	31.000	GSS07-2M□□□100C32	E84AV□□□7524□□0	62
4.2	17	-	100	400	644	0.9	35.306	GSS06-2M□□□100C32	E84AV□□□7524□□0	62
4.2	17	-	100	411	647	1.4	35.306	GSS07-2M□□□100C32	E84AV□□□7524□□0	62
3.7	15	-	90	434	676	1.0	39.200	GSS07-2M□□□100C32	E84AV□□□7524□□0	62
3.4	14	-	81	498	791	1.3	43.271	GSS07-2M□□□100C32	E84AV□□□7524□□0	62



Selection tables

► 120 Hz: P_N = 11.00 kW

n_{22}/n_2 = 1 ... 24.0

n_1 = 147.1 ... 3530 r/min

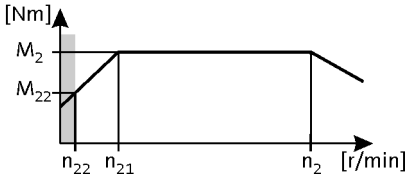

n_{22} [r/min]	n_{21} [r/min]		n_2 [r/min]	M_{22} [Nm]	M_2 [Nm]	c	i			
15	60	-	353	166	274	1.5	10.000	GSS07-2M□□□112C22	E84AV□□□1134□□0	62
14	59	-	345	170	278	1.0	10.238	GSS06-2M□□□112C22	E84AV□□□1134□□0	62
13	54	-	315	186	305	1.0	11.200	GSS06-2M□□□112C22	E84AV□□□1134□□0	62
13	54	-	315	186	307	1.5	11.200	GSS07-2M□□□112C22	E84AV□□□1134□□0	62
10	42	-	247	235	390	0.9	14.286	GSS06-2M□□□112C22	E84AV□□□1134□□0	62
10	42	-	247	237	392	1.4	14.286	GSS07-2M□□□112C22	E84AV□□□1134□□0	62
9.5	39	-	228	249	416	1.2	15.500	GSS07-2M□□□112C22	E84AV□□□1134□□0	62
8.5	35	-	203	279	467	1.1	17.360	GSS07-2M□□□112C22	E84AV□□□1134□□0	62
6.6	27	-	159	354	596	1.1	22.143	GSS07-2M□□□112C22	E84AV□□□1134□□0	62
5.4	22	-	130	430	729	1.0	27.125	GSS07-2M□□□112C22	E84AV□□□1134□□0	62
4.2	17	-	100	553	949	0.9	35.306	GSS07-2M□□□112C22	E84AV□□□1134□□0	62



Selection tables

► 120 Hz: P_N = 15.00 kW

n_{22}/n_2 = 1 ... 24.0

n_1 = 148.3 ... 3560 r/min

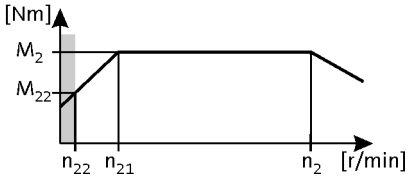

n_{22} [r/min]	n_{21} [r/min]		n_2 [r/min]	M_{22} [Nm]	M_2 [Nm]	c	i			
15	60	-	356	225	371	1.1	10.000	GSS07-2M□□□132C12	E84AV□□□1534□□0	62
13	54	-	318	253	416	1.1	11.200	GSS07-2M□□□132C12	E84AV□□□1534□□0	62
10	42	-	249	322	532	1.0	14.286	GSS07-2M□□□132C12	E84AV□□□1534□□0	62



Selection tables

► 120 Hz: P_N = 18.50 kW

n_{22}/n_2 = 1 ... 24.0

n_1 = 148.3 ... 3560 r/min

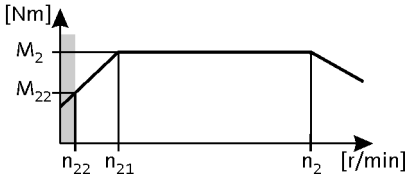

n_{22} [r/min]	n_{21} [r/min]		n_2 [r/min]	M_{22} [Nm]	M_2 [Nm]	c	i			
15	60	-	356	280	459	0.9	10.000	GSS07-2M□□□132C22	E84AV□□□1834□□0	62



Dimensions

GSS□□-2M H□R

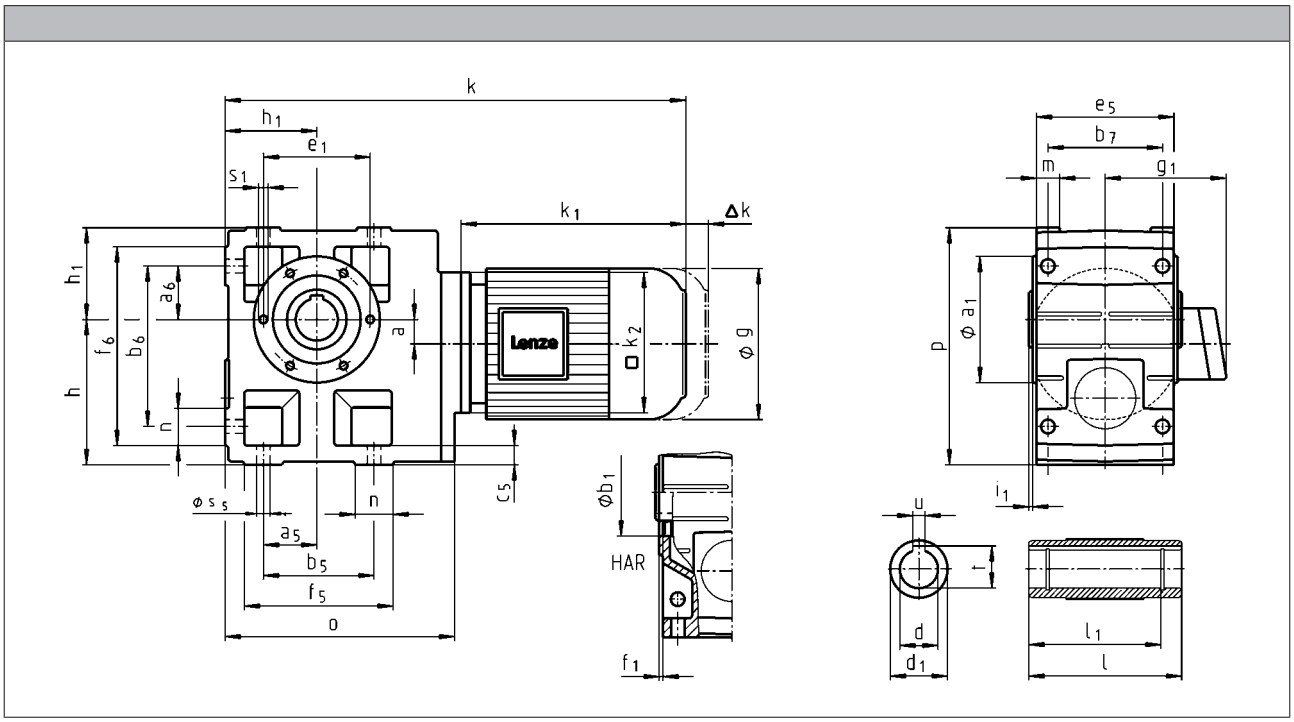



		063C32 063C42	071C32 071C42	080C32 080C42	090C32	100C12 100C32	112C22	132C12 132C22
g		123	139	156	176	194	218	258
g_1	MFEMAXX	100	109	150	157	166	176	195
	MFEMABR	107	118	132	137	147	158	187
k_1	MFEMAXX	187	207	224.5	274	324	319	403
k_2		120		145	180		222	265
Δ k	MFEMABR	40	52	73	68	76	90	109.5
	MFFMAXX	128				109	102	115
	MFFMABR	170	165	183	181	170	183	201.5
		k						
GSS04		377	397	420	479			
GSS05		399	419	441	501	551		
GSS06		439	459	481	541	591	592	
GSS07				524	584	634	635	727

	a	h[1)]	h_1	o	p[1)]
GSS04	20	100	71	181	171
GSS05	23	125	80	212	205
GSS06	26	150	100	255	250
GSS07	33	190	120	305	310

	d	d_1	l[1)]	l_1	u	t	i_1	a_1	b_1	e_1	f_1	s_1
	H7				JS9	+0,2			H7			
GSS04	25 30	45 45	115 115	100 100	8 8	28.3 33.3	2.5 2.5	104	75	90	3	M6x12
GSS05	30 35	50 50	140 140	124 124	8 10	33.3 38.3	4 4	118	80	100	4	M8x15
GSS06	40 45	65 65	160 160	140 140	12 14	43.3 48.8	5 5	140	100	120	4	M10x16
GSS07	50 55	75 75	200 200	175 175	14 16	53.8 59.3	5 5	165	115	140	5	M12x18

	a_5	a_6	b_5	b_6	b_7	c_5	e_5	f_5	f_6	m	n	s_5
GSS04	45	45	90	119	85	14	100	112	141	20	22	9
GSS05	47.5	47.5	95	140	105	17	115	124	169	21	29	11
GSS06	60	60	120	170	120	20	145	156	206	23	36	14
GSS07	70	70	140	210	150	25	180	185	255	28	45	18

[1)] k_2 !

Dimensions

GSS□□-2M HAK

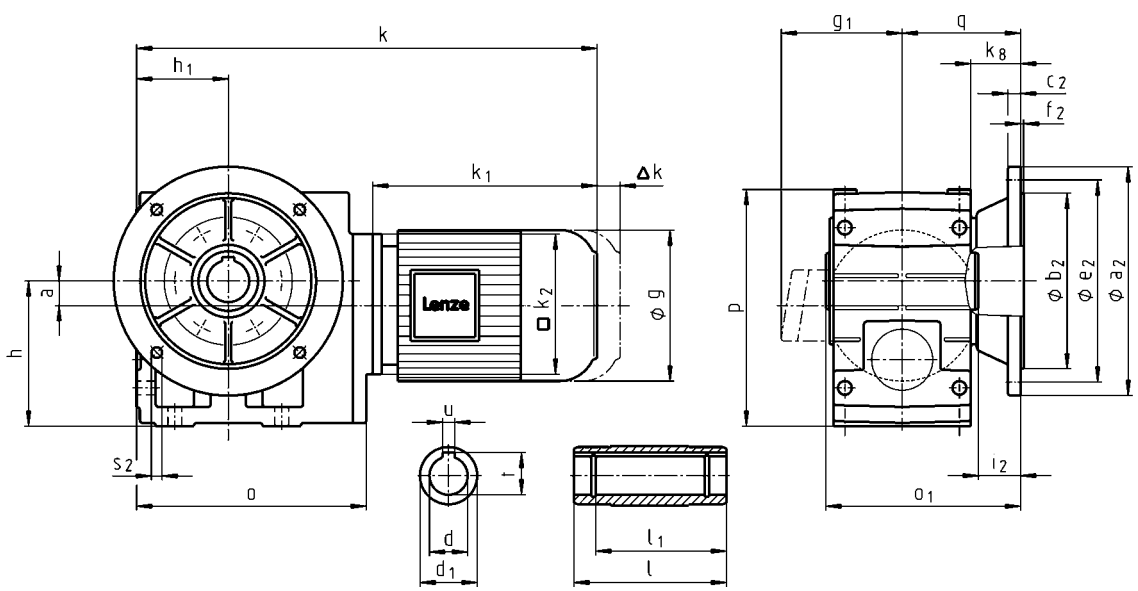

GSS helical-worm gearboxes

Technical data



		063C32 063C42	071C32 071C42	080C32 080C42	090C32	100C12 100C32	112C22	132C12 132C22
g		123	139	156	176	194	218	258
g_1	MFEMAXX	100	109	150	157	166	176	195
	MFEMABR	107	118	132	137	147	158	187
k_1	MFEMAXX	187	207	224.5	274	324	319	403
k_2		120		145	180		222	265
Δ k	MFEMABR	40	52	73	68	76	90	109.5
	MFFMAXX	128				109	102	115
	MFFMABR	170	165	183	181	170	183	201.5
		k						
GSS04		377	397	420	479			
GSS05		399	419	441	501	551		
GSS06		439	459	481	541	591	592	
GSS07				524	584	634	635	727

	a	h[1)]	h_1	k_8	o	p[1)]	q
GSS04	20	100	71	41	181	171	91
GSS05	23	125	80	40	212	205	103.5
GSS06	26	150	100	49	255	250	121.5
GSS07	33	190	120	65.5	305	310	155.5

	d	d_1	l	l_1	u	t	i_2	o_1[1)]	a_2	b_2	c_2	e_2	f_2	s_2
	H7				JS9	+0,2				j7				
GSS04	25 30	45 45	115 115	100 100	8 8	28.3 33.3	33.5 33.5	148.5 148.5	160	110	10	130	3.5	4 x 9
GSS05	30 35	50 50	140 140	124 124	8 10	33.3 38.3	33 33	173.5 173.5	200	130	12	165	4	4 x 11
GSS06	40 45	65 65	160 160	140 140	12 14	43.3 48.8	42 41	201.5 201.5	200 250	130 180	12 15	165 215	3.5 4	4 x 11 4 x 14
GSS07	50 55	75 75	200 200	175 175	14 16	53.8 59.3	55 55	255.5 255.5	250 300	180 230	15 17	215 265	4 4	4 x 14 4 x 14

[1)] k_2 !



Dimensions

GSS□□-2M V□R

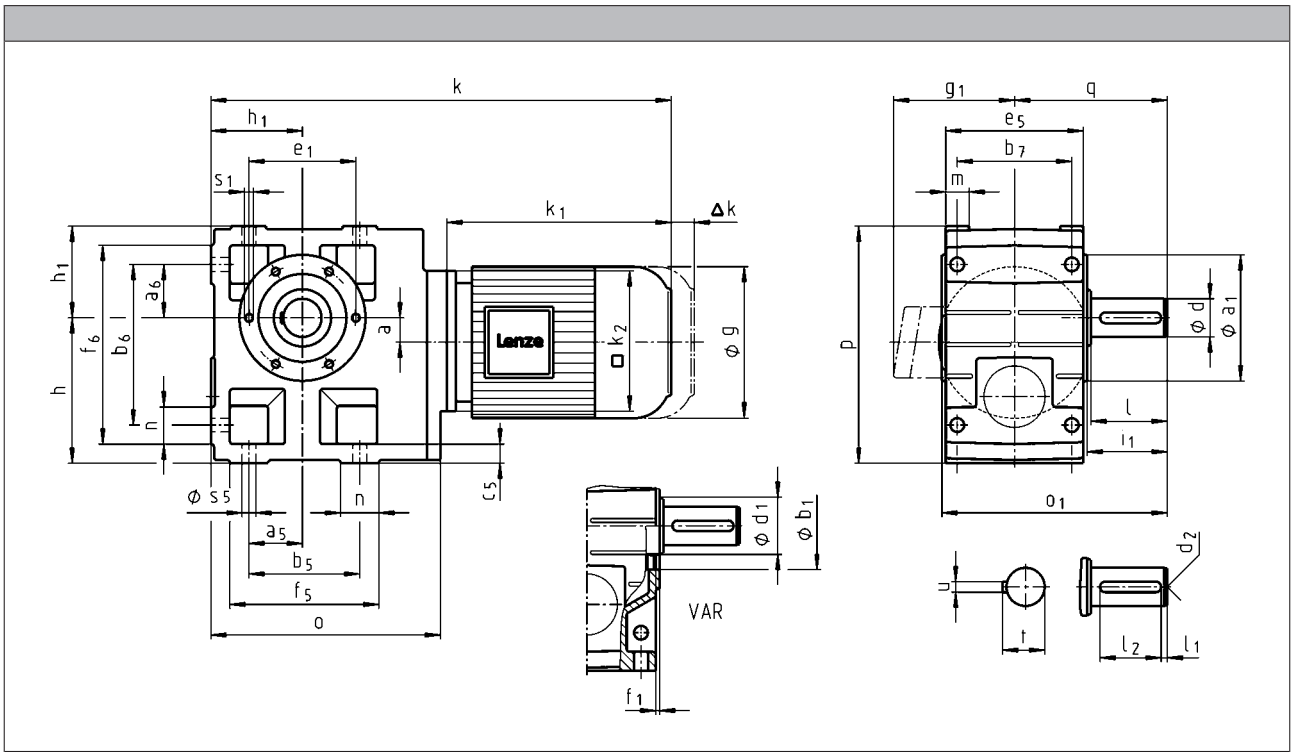



		063C32 063C42	071C32 071C42	080C32 080C42	090C32	100C12 100C32	112C22	132C12 132C22
g		123	139	156	176	194	218	258
g_1	MFEMAXX	100	109	150	157	166	176	195
	MFEMABR	107	118	132	137	147	158	187
k_1	MFEMAXX	187	207	224.5	274	324	319	403
k_2		120		145	180		222	265
Δ k	MFEMABR	40	52	73	68	76	90	109.5
	MFFMAXX	128				109	102	115
	MFFMABR	170	165	183	181	170	183	201.5
		k						
GSS04		377	397	420	479			
GSS05		399	419	441	501	551		
GSS06		439	459	481	541	591	592	
GSS07				524	584	634	635	727

	a	h[1)]	h_1	o	p[1)]	q
GSS04	20	100	71	181	171	107.5
GSS05	23	125	80	212	205	130
GSS06	26	150	100	255	250	160
GSS07	33	190	120	305	310	200

	d	d_1	d_2	l	l_1	l_2	u	t	i_1	o_1[1)]	a_1	b_1	e_1	f_1	s_1
	k6											H7			
GSS04	25	45	M10	50	6	40	8	28	52.5	162.5	104	75	90	3	M6x12
GSS05	30	45	M10	60	6	45	8	33	64	196.5	118	80	100	4	M8x15
GSS06	40	65	M16	80	7	63	12	43	85	235.5	140	100	120	4	M10x16
GSS07	50	75	M16	100	8	80	14	53.5	105	295.5	165	115	140	5	M12x18

	a_5	a_6	b_5	b_6	b_7	c_5	e_5	f_5	f_6	m	n	s_5
GSS04	45	45	90	119	85	14	100	112	141	20	22	9
GSS05	47.5	47.5	95	140	105	17	115	124	169	21	29	11
GSS06	60	60	120	170	120	20	145	156	206	23	36	14
GSS07	70	70	140	210	150	25	180	185	255	28	45	18

[1)] k_2 !



Dimensions

GSS□□-2M VAK

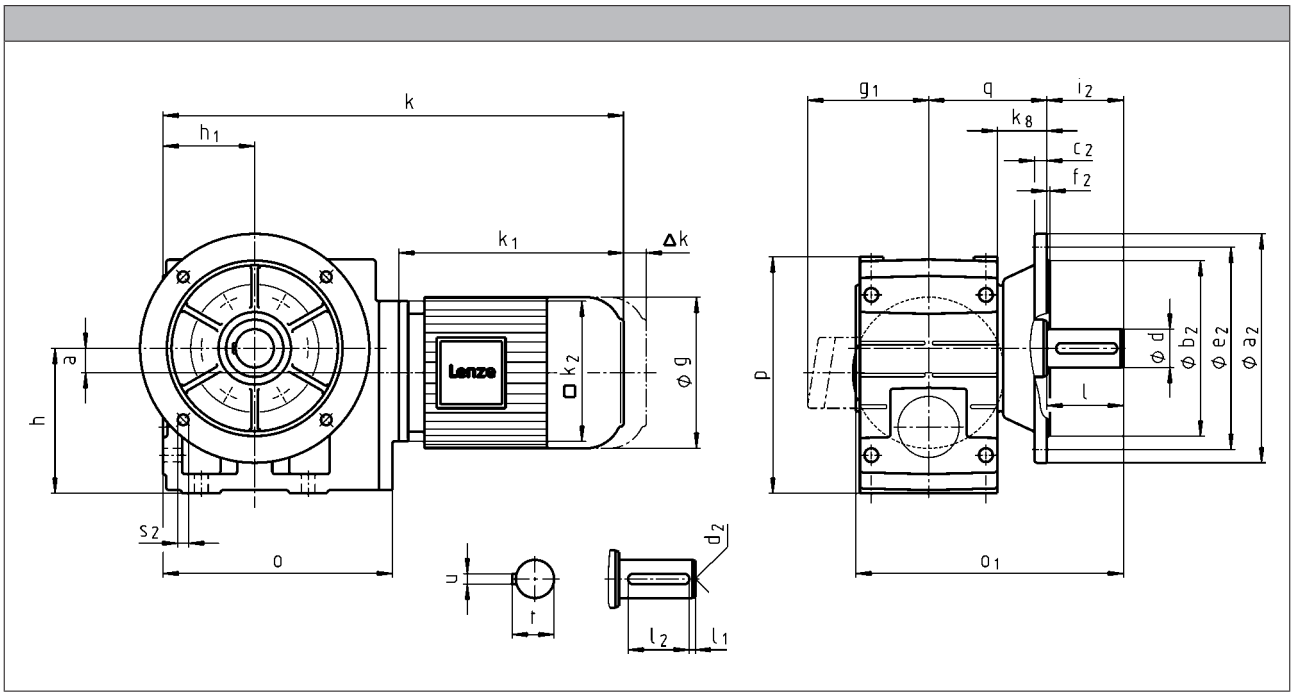

GSS helical-worm gearboxes

Technical data



		063C32 063C42	071C32 071C42	080C32 080C42	090C32	100C12 100C32	112C22	132C12 132C22
g		123	139	156	176	194	218	258
g_1	MFEMAXX	100	109	150	157	166	176	195
	MFEMABR	107	118	132	137	147	158	187
k_1	MFEMAXX	187	207	224.5	274	324	319	403
k_2		120		145	180		222	265
Δ k	MFEMABR	40	52	73	68	76	90	109.5
	MFFMAXX	128				109	102	115
	MFFMABR	170	165	183	181	170	183	201.5
		k						
GSS04		377	397	420	479			
GSS05		399	419	441	501	551		
GSS06		439	459	481	541	591	592	
GSS07				524	584	634	635	727

	a	h[1)]	h_1	k_8	o	p[1)]	q
GSS04	20	100	71	41	181	171	91
GSS05	23	125	80	40	212	205	103.5
GSS06	26	150	100	49	255	250	121.5
GSS07	33	190	120	65.5	305	310	155.5

	d	d_2	l	l_1	l_2	u	t	i_2	o_1[1)]	a_2	b_2	c_2	e_2	f_2	s_2
	k6										j7				
GSS04	25	M10	50	6	40	8	28	50	195.5	160	110	10	130	3.5	4 x 9
GSS05	30	M10	60	6	45	8	33	60	229.5	200	130	12	165	4	4 x 11
GSS06	40	M16	80	7	63	12	43	80	276.5	250	180	15	215	4	4 x 14
GSS07	50	M16	100	8	80	14	53.5	100	350.5	250 300	180 230	15 17	215 265	4 4	4 x 14 4 x 14

[1)] k_2 !



Dimensions

GSS□□-3M H□R

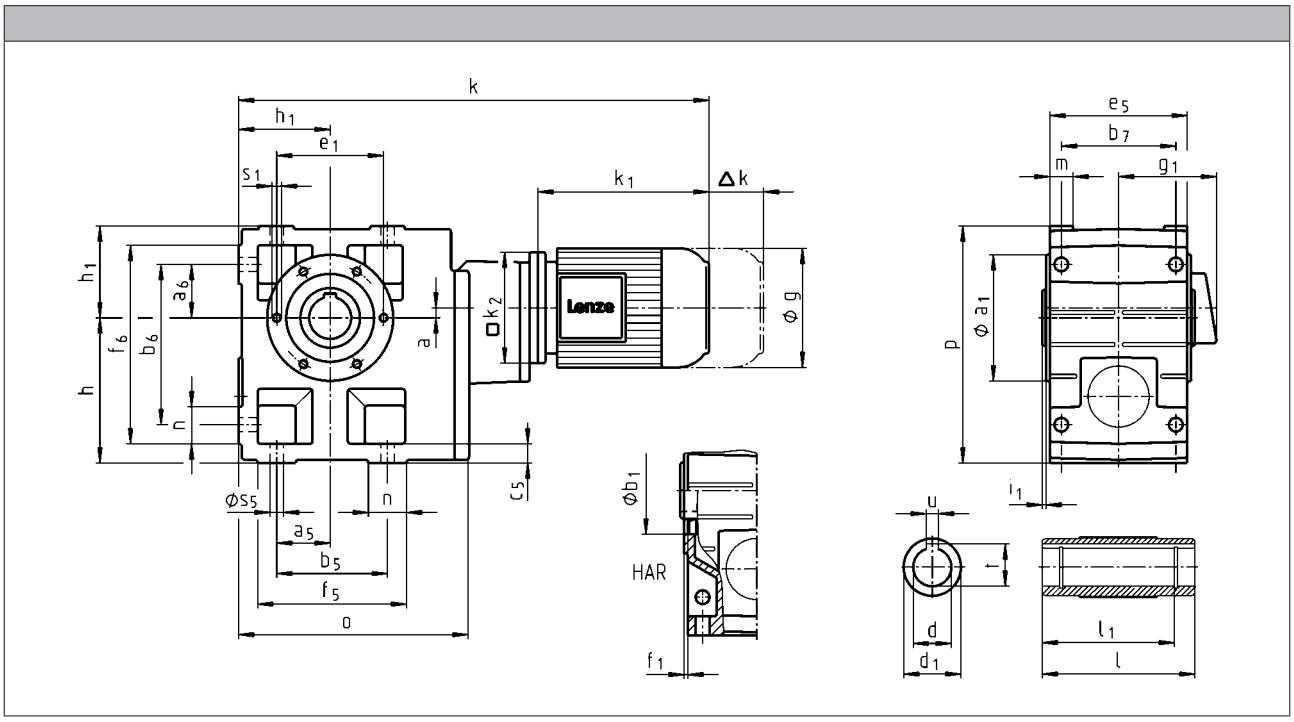



		063C32 063C42	071C32 071C42	080C32	080C42	090C32
g		123	139	156		176
g_1	MFEMAXX	100	109	150		157
	MFEMABR	107	118	132		137
k_1	MFEMAXX	187	207	224.5		274
k_2		120		145		180
Δ k	MFEMABR	40	52	73		68
	MFFMAXX	128				
	MFFMABR	170	165	183		181
		k				
GSS05		475				
GSS06		532	552	575		
GSS07		586	606	629		688

	a	h	h_1	o	p
GSS05	13	125	80	209	205
GSS06	10	150	100	252	250
GSS07	12	190	120	299	310

	d H7	d_1	l	l_1	u JS9	t +0,2	i_1	a_1	b_1 H7	e_1	f_1	s_1
GSS05	30 35	50 50	140 140	124 124	8 10	33.3 38.3	4 4	118	80	100	4	M8x15
GSS06	40 45	65 65	160 160	140 140	12 14	43.3 48.8	5 5	140	100	120	4	M10x16
GSS07	50 55	75 75	200 200	175 175	14 16	53.8 59.3	5 5	165	115	140	5	M12x18

	a_5	a_6	b_5	b_6	b_7	c_5	e_5	f_5	f_6	m	n	s_5
GSS05	47.5	47.5	95	140	105	17	115	124	169	21	29	11
GSS06	60	60	120	170	120	20	145	156	206	23	36	14
GSS07	70	70	140	210	150	25	180	185	255	28	45	18



Dimensions

GSS□□-3M HAK

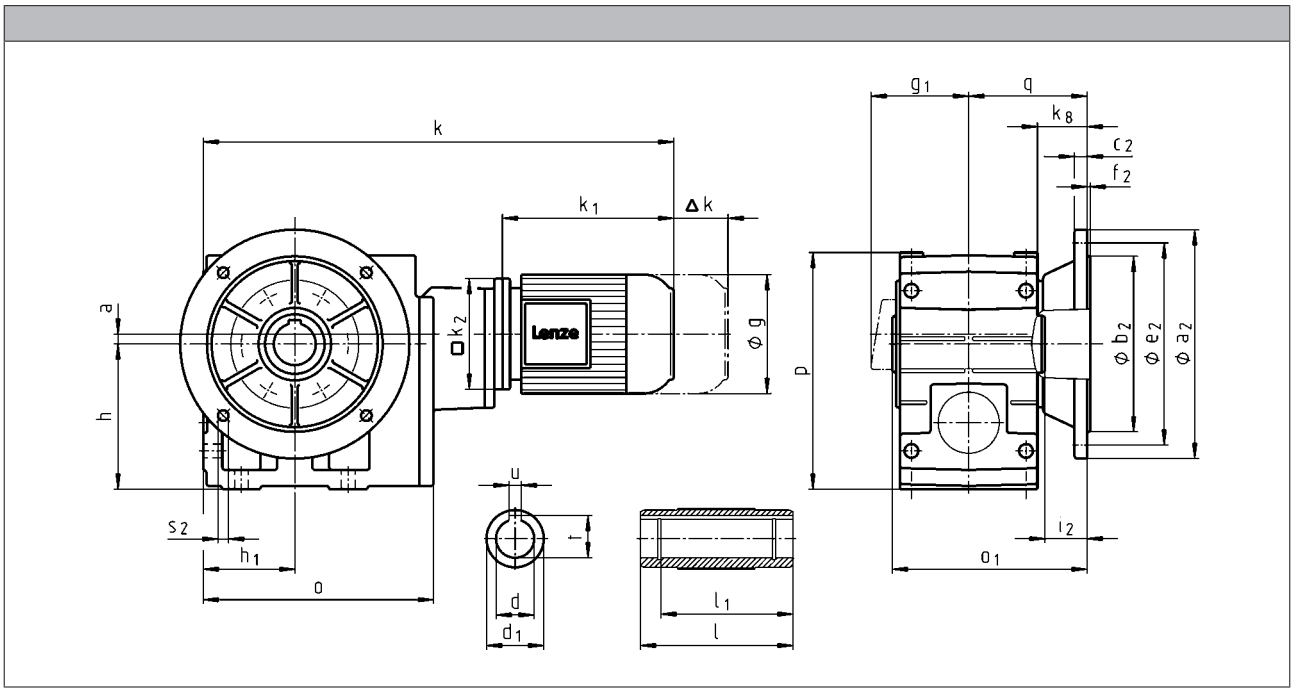



		063C32 063C42	071C32 071C42	080C32	080C42	090C32
g		123	139	156		176
g_1	MFEMAXX	100	109	150		157
	MFEMABR	107	118	132		137
k_1	MFEMAXX	187	207	224.5		274
k_2		120		145		180
Δ k	MFEMABR	40	52	73		68
	MFFMAXX	128				
	MFFMABR	170	165	183		181
		k				
GSS05		475				
GSS06		532	552	575		
GSS07		586	606	629		688

	a	h	h_1	k_8	o	p	q
GSS05	13	125	80	40	209	205	103.5
GSS06	10	150	100	49	252	250	121.5
GSS07	12	190	120	65.5	299	310	155.5

	d	d_1	l	l_1	u	t	i_2	o_1	a_2	b_2	c_2	e_2	f_2	s_2
	H7				JS9	+0,2				j7				
GSS05	30 35	50 50	140 140	124 124	8 10	33.3 38.3	33 33	173.5 173.5	200	130	12	165	4	4 x 11
GSS06	40 45	65 65	160 160	140 140	12 14	43.3 48.8	42 41	201.5 201.5	200 250	130 180	12 15	165 215	3.5 4	4 x 11 4 x 14
GSS07	50 55	75 75	200 200	175 175	14 16	53.8 59.3	55 55	255.5 255.5	250 300	180 230	15 17	215 265	4 4	4 x 14 4 x 14



Dimensions

GSS□□-3M V□R

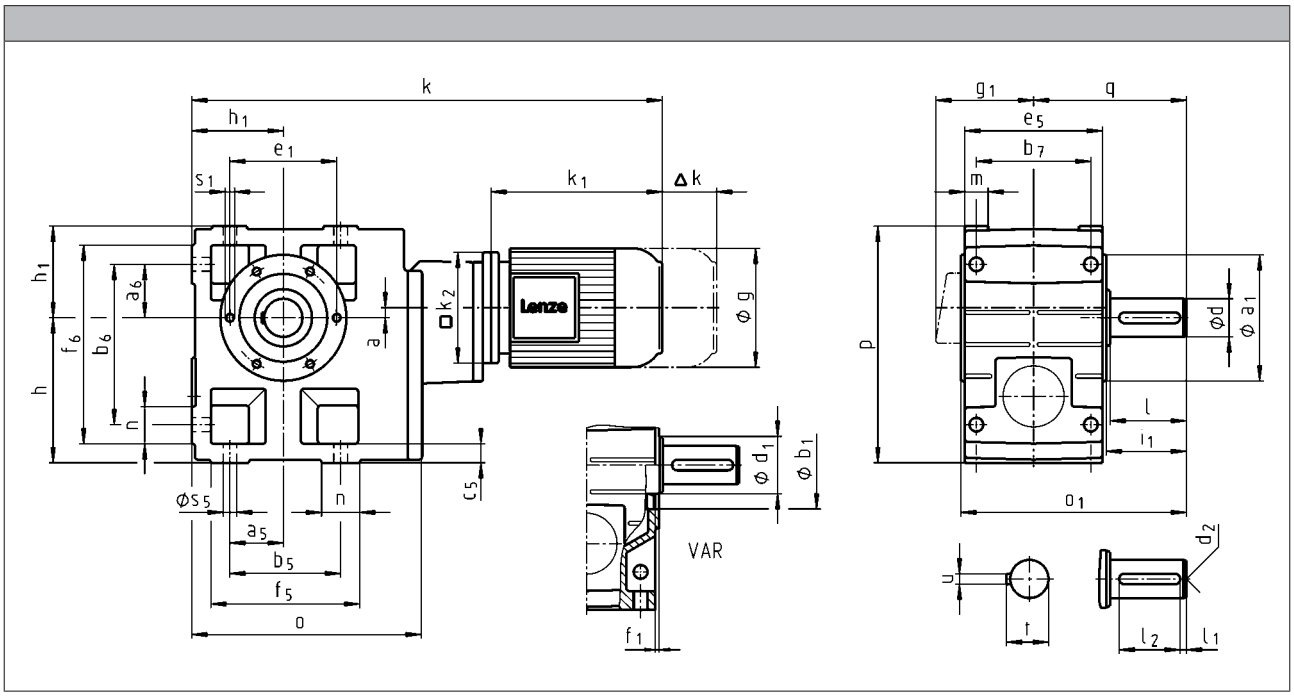



		063C32 063C42	071C32 071C42	080C32	080C42	090C32
g		123	139	156		176
g_1	MFEMAXX	100	109	150		157
	MFEMABR	107	118	132		137
k_1	MFEMAXX	187	207	224.5		274
k_2		120		145		180
Δ k	MFEMABR	40	52	73		68
	MFFMAXX	128				
	MFFMABR	170	165	183		181
		k				
GSS05		475				
GSS06		532	552	575		
GSS07		586	606	629		688

	a	h	h_1	o	p	q
GSS05	13	125	80	209	205	130
GSS06	10	150	100	252	250	160
GSS07	12	190	120	299	310	200

	d	d_1	d_2	l	l_1	l_2	u	t	i_1	o_1	a_1	b_1	e_1	f_1	s_1
	k6											H7			
GSS05	30	45	M10	60	6	45	8	33	64	196.5	118	80	100	4	M8x15
GSS06	40	65	M16	80	7	63	12	43	85	235.5	140	100	120	4	M10x16
GSS07	50	75	M16	100	8	80	14	53.5	105	295.5	165	115	140	5	M12x18

	a_5	a_6	b_5	b_6	b_7	c_5	e_5	f_5	f_6	m	n	s_5
GSS05	47.5	47.5	95	140	105	17	115	124	169	21	29	11
GSS06	60	60	120	170	120	20	145	156	206	23	36	14
GSS07	70	70	140	210	150	25	180	185	255	28	45	18



Dimensions

GSS□□-3M VAK

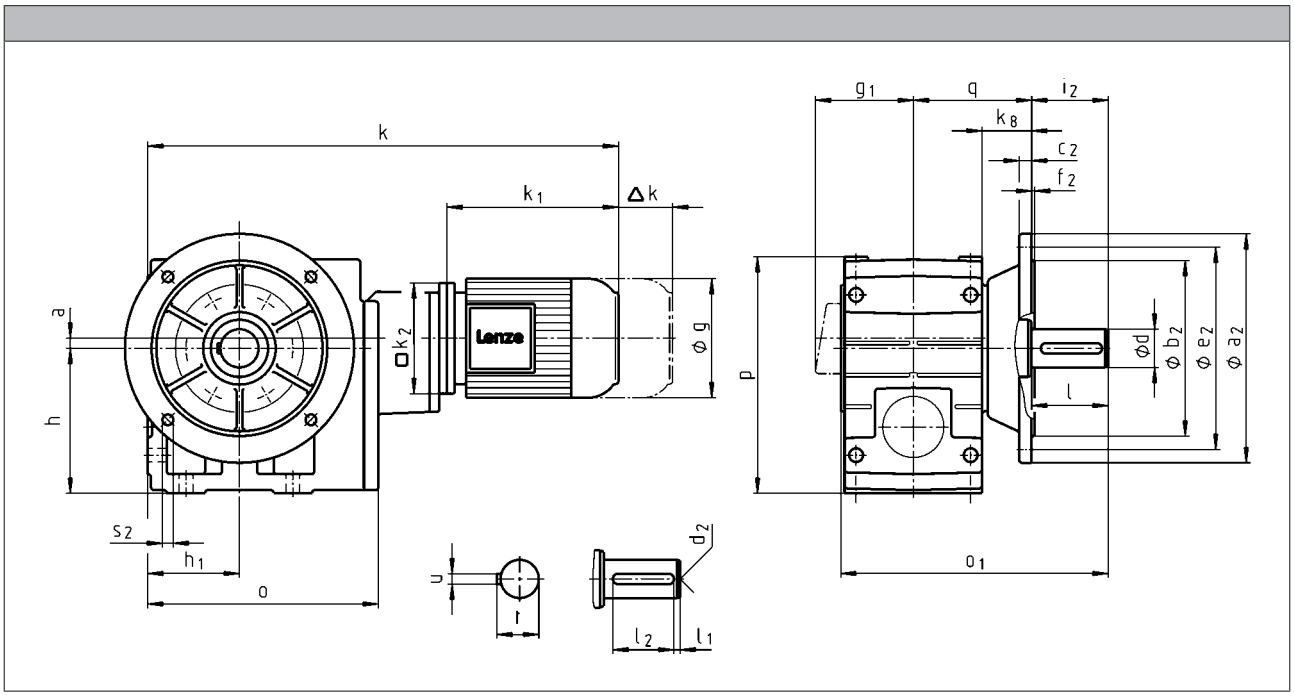



		063C32 063C42	071C32 071C42	080C32	080C42	090C32
g		123	139	156		176
g_1	MFEMAXX	100	109	150		157
	MFEMABR	107	118	132		137
k_1	MFEMAXX	187	207	224.5		274
k_2		120		145		180
Δ k	MFEMABR	40	52	73		68
	MFFMAXX	128				
	MFFMABR	170	165	183		181
		k				
GSS05		475				
GSS06		532	552	575		
GSS07		586	606	629		688

	a	h	h_1	k_8	o	p	q
GSS05	13	125	80	40	209	205	103.5
GSS06	10	150	100	49	252	250	121.5
GSS07	12	190	120	65.5	299	310	155.5

	d	d_2	l	l_1	l_2	u	t	i_2	o_1	a_2	b_2	c_2	e_2	f_2	s_2
	k6										j7				
GSS05	30	M10	60	6	45	8	33	60	229.5	200	130	12	165	4	4 x 11
GSS06	40	M16	80	7	63	12	43	80	276.5	250	180	15	215	4	4 x 14
GSS07	50	M16	100	8	80	14	53.5	100	350.5	250 300	180 230	15 17	215 265	4 4	4 x 14 4 x 14





Hollow shaft with shrink disc

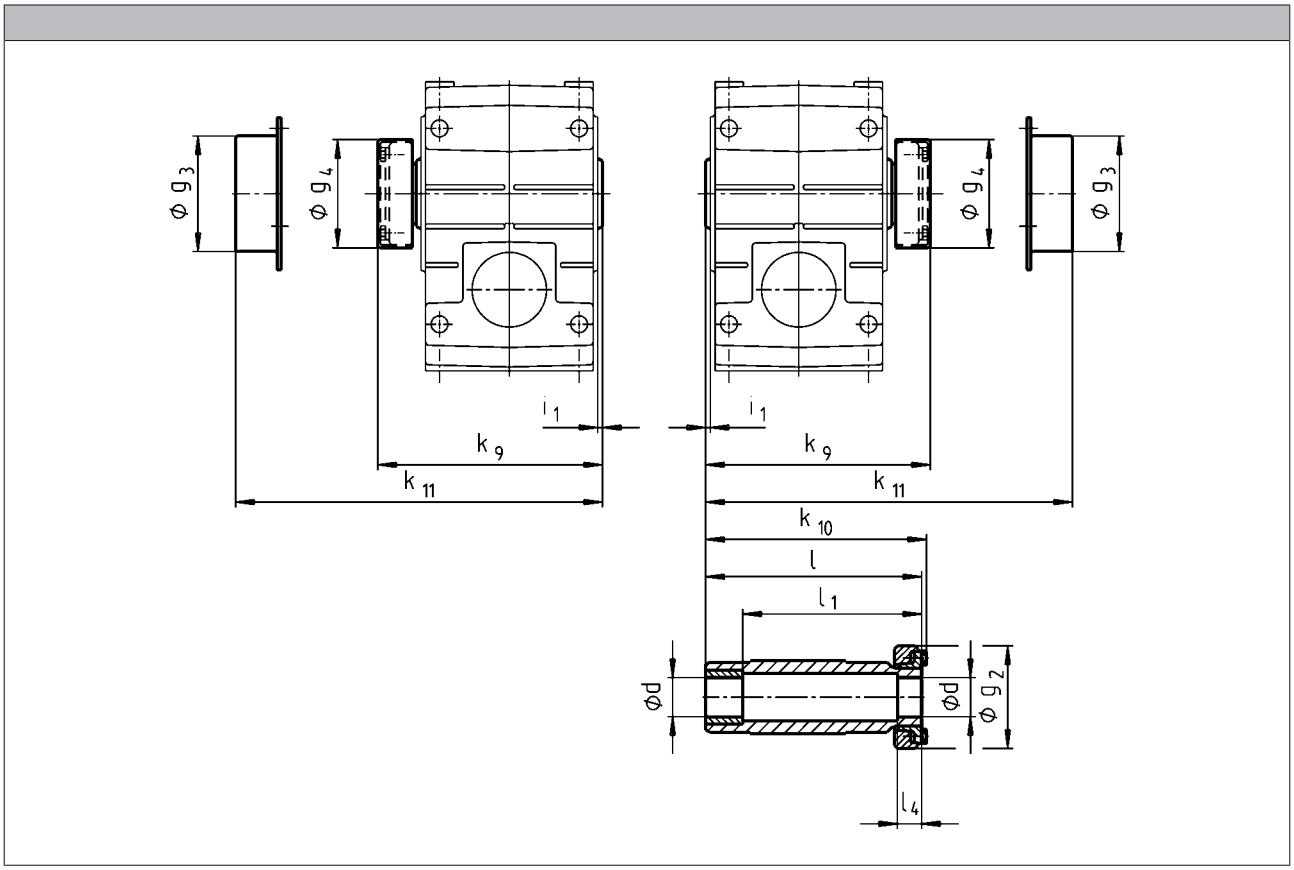

	d	g_2	g_3	g_4	i_1	k_9	k_{10}	k_{11}	l	l_1	l_4
	h6										
GSS04	25 30	72	79	76	2.5	150	148	154	142	122	26
GSS05	35	80	90	84	4.0	176	174	179	168	148	28
GSS06	40	90	100	94	5.0	202	200	204	194	164	30
GSS07	50	110	124	116		241	238	244	232	192	26

- ► Output flange and hollow shaft with shrink disc (output version SAK) are not possible in the same location. For additional dimensions see output version H□□.
- ► Ensure that the strength of the machine shaft material is adequate in shrink disc designs.
  When using typical steels, e.g. C45, 42CrMo4, the torques listed in the selection tables can be used without restriction.
  Please consult us if you wish to use material that is considerably weaker. Medium surface roughness Rz must not exceed 15 µm (turning is sufficient).



Mounting set for hollow shaft circlip:
Proposed design for auxiliary tools

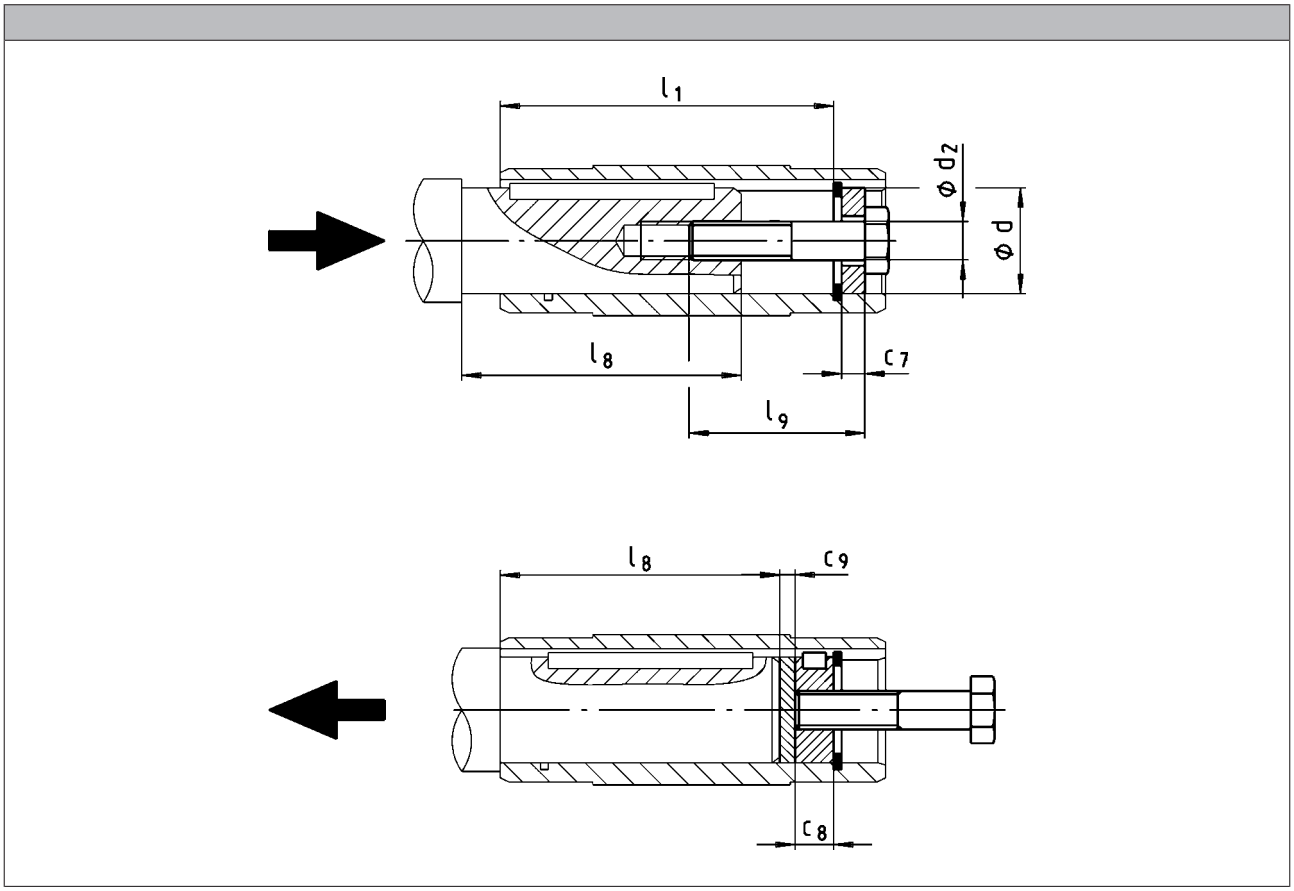

	d	l_1	d_2	l_9	c_7	c_8	c_9	$l_{8,\,max}$
	H7							
GSS04	25 30	100	M10	40	5	10	3	85
					6			
GSS05	30 35	124						107
			M12	50	7	12		
GSS06	40 45	140	M16	60	8	16	4	118
					9			
GSS07	50 55	175			10		5	148
			M20	80	11	20		



Hoseproof hollow shaft cover

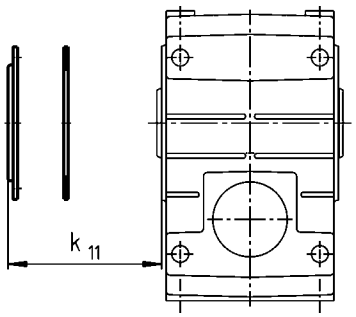

► Cover including gasket

	k_{11}
	[mm]
GSS04	9
GSS05	10
GSS06	11
GSS07	

Gearboxes with 2nd output shaft end

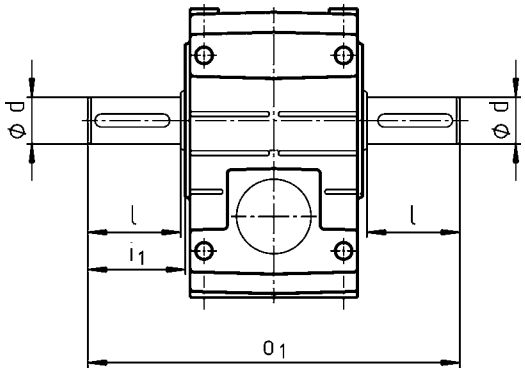

	d	l	i_1	o_1
	k6			
GSS04	25	50	52.5	215
GSS05	30	60	64.0	260
GSS06	40	80	85.0	320
GSS07	50	100	105.0	400



Torque plate on threaded pitch circle

In position 3

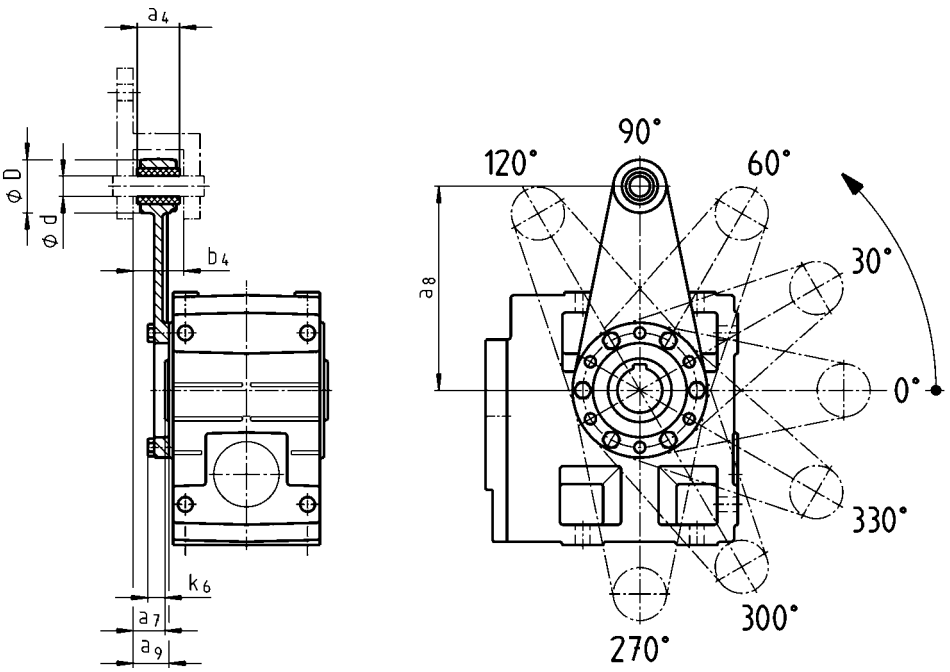

In position 5

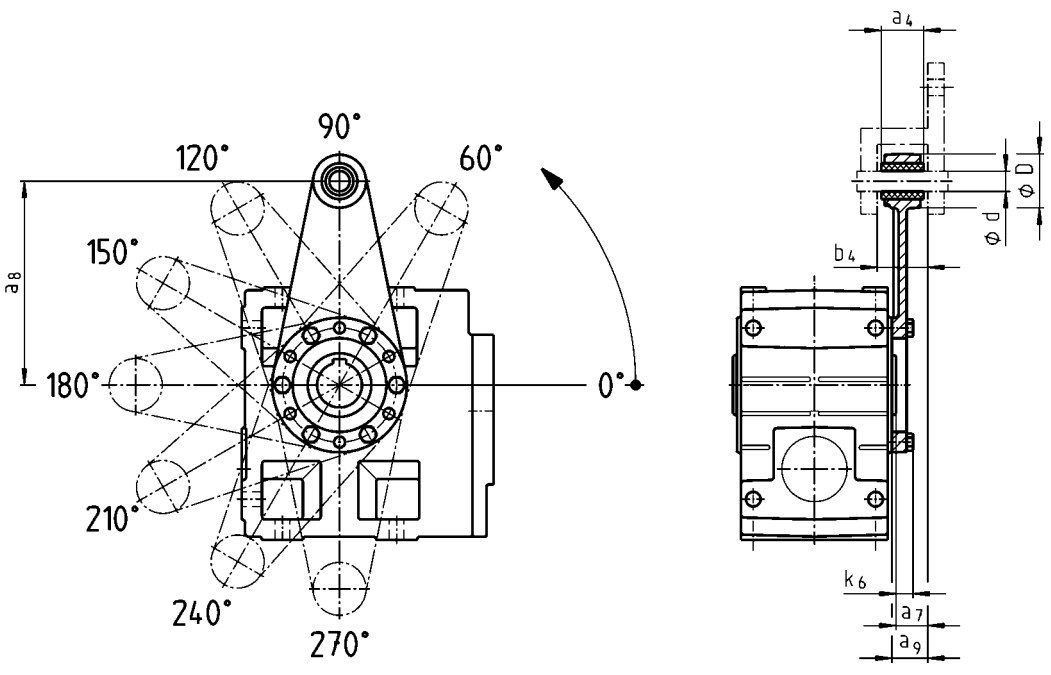

	a_4	a_7	a_8	a_9	b_4	d	D	k_6
GSS04	30	24.0	130	26.5	34.5	12	35	16
GSS05	34	23.5	160	27.5	38.5	16	45	15
GSS06	40	28.0	200	33.0	44.5	20	50	18
GSS07	46	32.5	250	37.5	50.5	25	65	21



Torque plate at housing foot

In position 2, 4 or 6

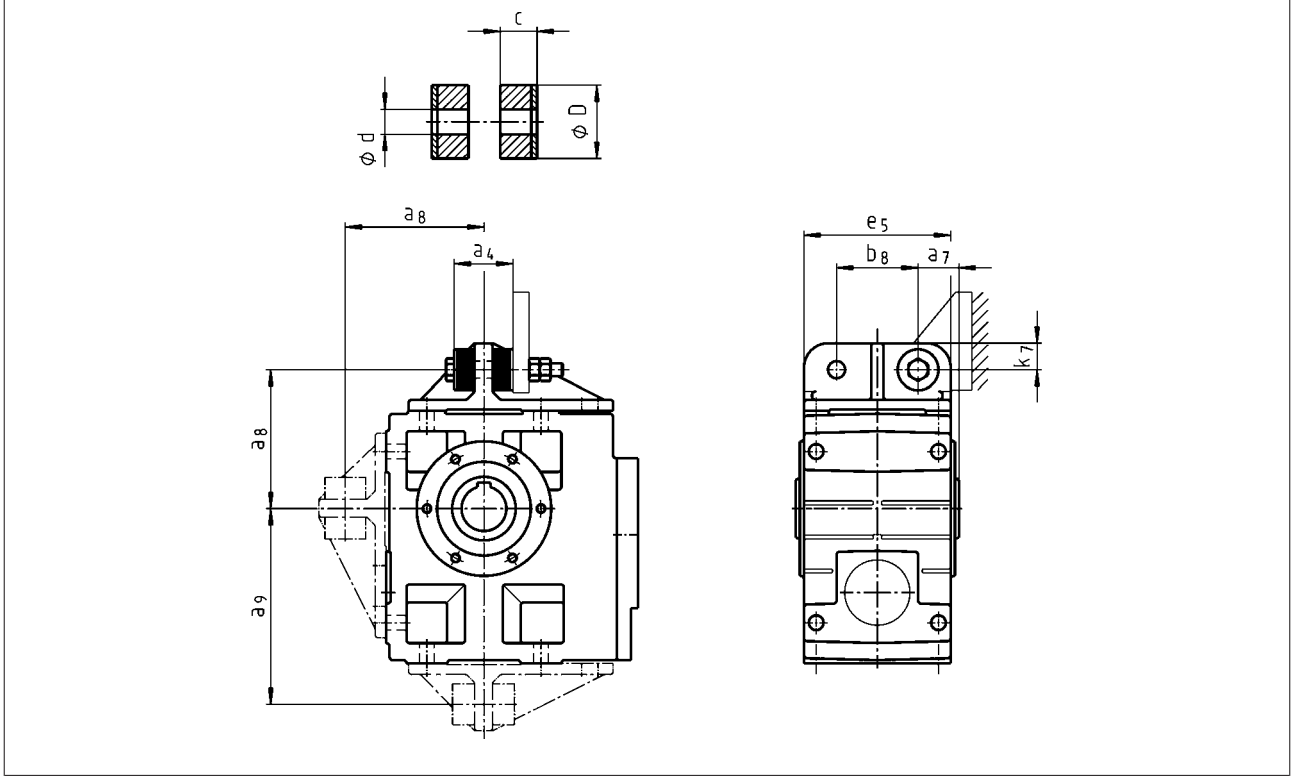

	a_4	a_7	a_8	a_9	b_8	c	d	D	e_5	k_7
GSS04	41	27.5	106	135.0	60	14.5	11	30	100	20
GSS05	45	35.0	115	160.0	70	15.0	13	40	127	25
GSS06	72	40.0	145	195.0	80	27.0	17	50	145	28
GSS07	78	50.0	170	240.0	100	28.0	21	60	180	35

Ventilations

Position of ventilation, sealing elements and oil level check

GSS05...07-2

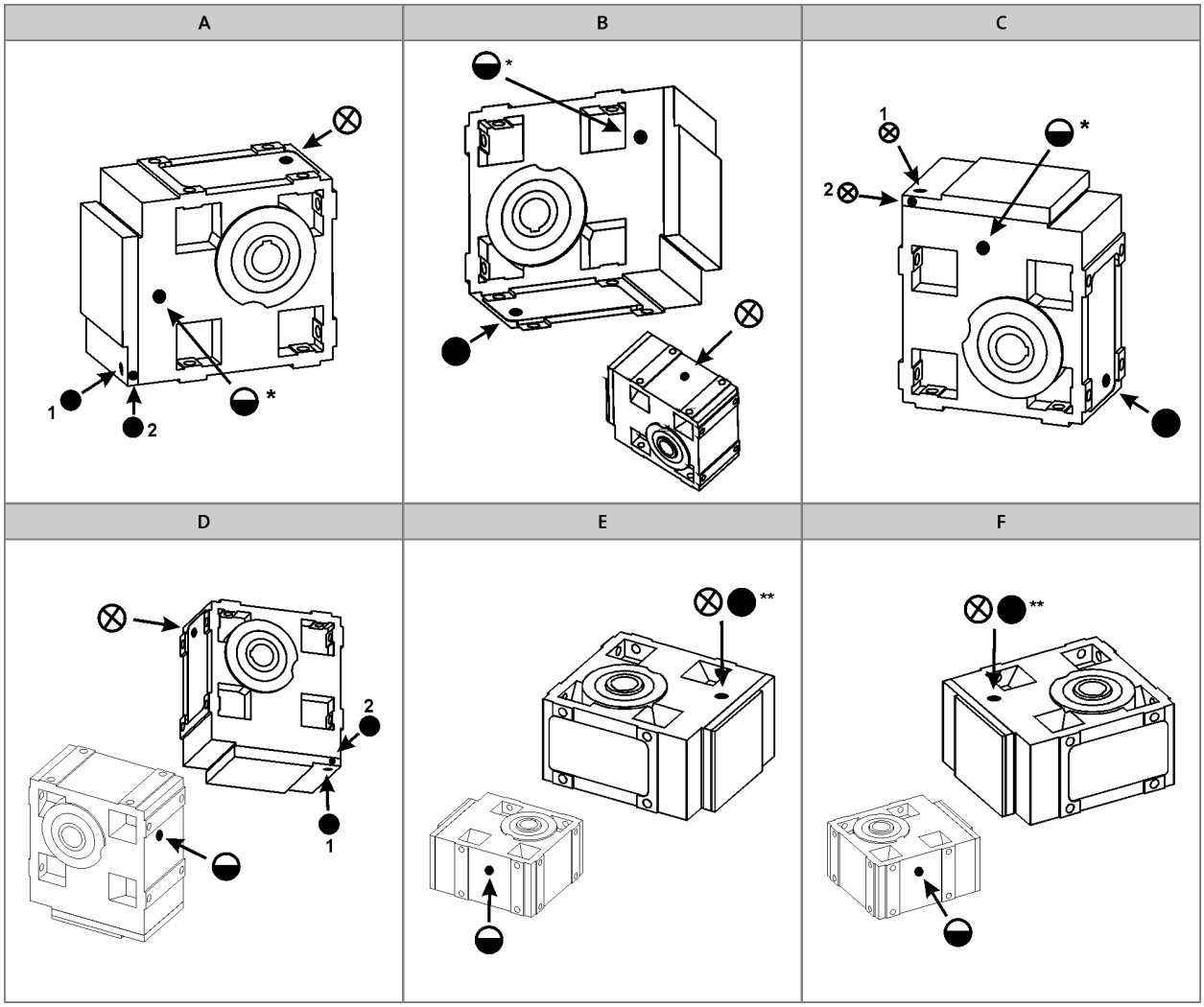

A ... F Mounting position
⊗ Ventilation / Oil filler plug
● Oil drain plug
◒ Oil control plug
* On both sides
** On opposite side

Item 1 standard
Item 2 only with:
- GSS05-2M □□□ 090C□□
- GSS05-2M □□□ 100C□□
- GSS06-2M □□□ 112C□□
- GSS07-2M □□□ 160C□□

Ventilations

Position of ventilation, sealing elements and oil level check

GSS05...07-3

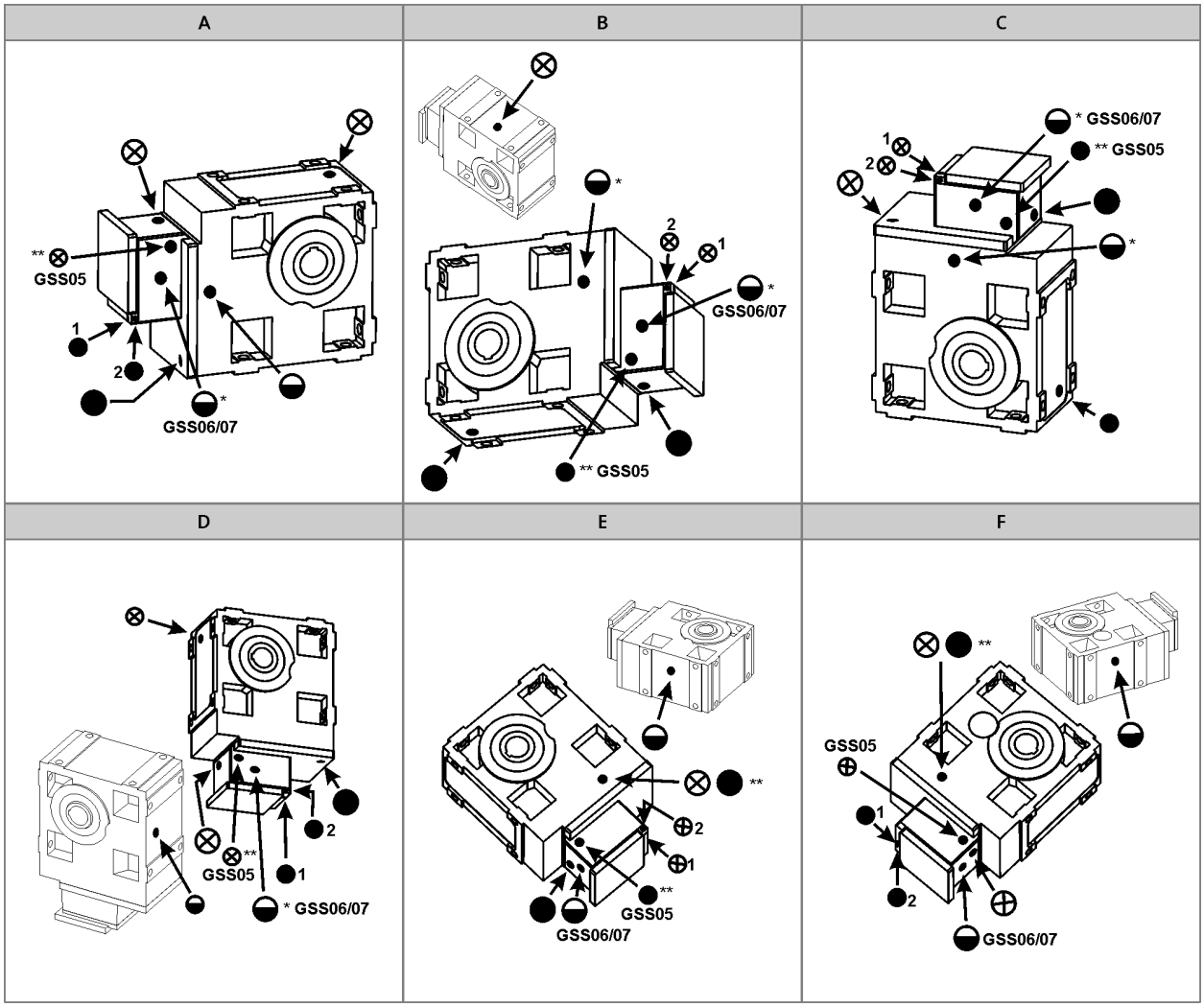

A ... F Mounting position
⊗ Ventilation / Oil filler plug
● Oil drain plug
◒ Oil control plug
* On both sides
** On opposite side

Item 1 standard
Item 2 only on:
- GSS07-3M □□□ 090C□□
- GSS07-3M □□□ 100C□□







MF three-phase AC motors

0.55 to 22 kW

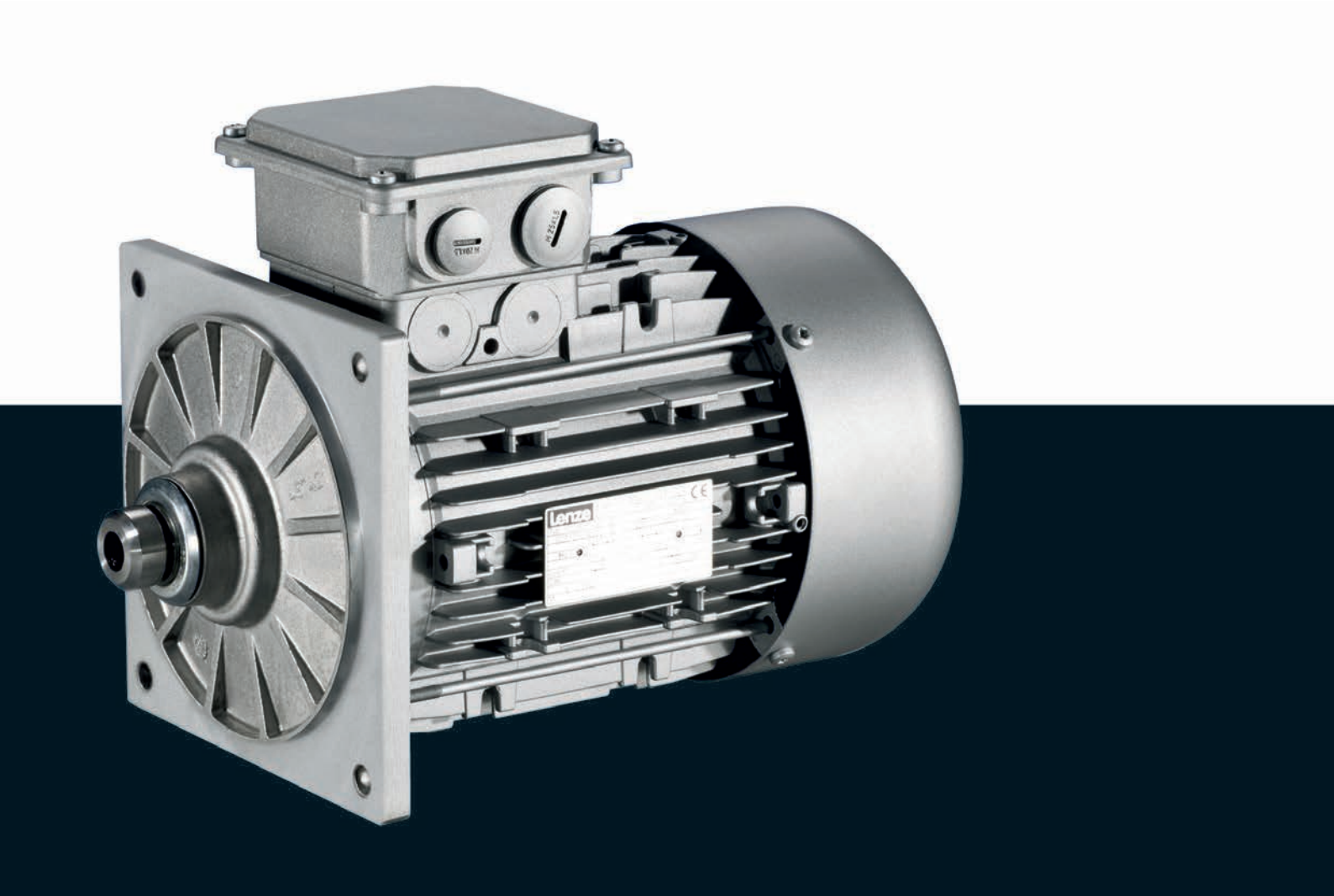

MF three-phase AC motors

Contents

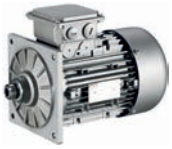

General information	List of abbreviations	6.11 - 4
	Product key	6.11 - 5
	Product information	6.11 - 6
	Functions and features	6.11 - 7
	Motor – inverter assignment	6.11 - 10
	Dimensioning	6.11 - 11
Technical data	Standards and operating conditions	6.11 - 13
	Rated data for 120 Hz	6.11 - 14
	Dimensions, self-ventilated (4-pole)	6.11 - 15
	Dimensions, forced ventilated (4-pole)	6.11 - 16
	Dimensions, 8400 motec inverter	6.11 - 17
Accessories	Spring-applied brake	6.11 - 19
	Resolver	6.11 - 31
	Incremental encoder and SinCos absolute value encoder	6.11 - 32
	Blowers	6.11 - 33
	Temperature monitoring	6.11 - 35
	Terminal box	6.11 - 37
	Plug connectors	6.11 - 42
	ICN connector	6.11 - 42
	M12 connector	6.11 - 51
	HAN connector	6.11 - 52
	2nd shaft end	6.11 - 57
	Protection cover	6.11 - 58

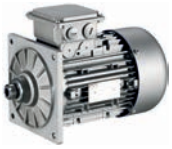

List of abbreviations

$\eta_{100\,\%}$	[%]	Efficiency
$\eta_{75\,\%}$	[%]	Efficiency
$\eta_{50\,\%}$	[%]	Efficiency
cos ϕ		Power factor
I_N	[A]	Rated current
I_{max}	[A]	Max. current consumption
J	[kgcm²]	Moment of inertia
m	[kg]	Mass
M_a	[Nm]	Starting torque
M_b	[Nm]	Stalling torque
M_{max}	[Nm]	Max. torque
M_N	[Nm]	Rated torque
n_N	[r/min]	Rated speed
P_N	[kW]	Rated power
P_{max}	[kW]	Max. power input

U_{max}	[V]	Max. mains voltage
U_{min}	[V]	Min. mains voltage
$U_{N,\Delta}$	[V]	Rated voltage
$U_{N,Y}$	[V]	Rated voltage

CE	Communauté Européenne
CSA	Canadian Standards Association
DIN	Deutsches Institut für Normung e.V.
EMC	Electromagnetic compatibility
EN	European standard
IEC	International Electrotechnical Commission
IM	International Mounting Code
IP	International Protection Code
NEMA	National Electrical Manufacturers Association
UL	Underwriters Laboratory Listed Product
UR	Underwriters Laboratory Recognized Product
VDE	Verband deutscher Elektrotechniker (Association of German Electrical Engineers)
CCC	China Compulsory Certificate
GOST	Certificate for Russian Federation
cURus	Combined certification marks of UL for the USA and Canada
UkrSEPRO	Certificate for Ukraine



Product key

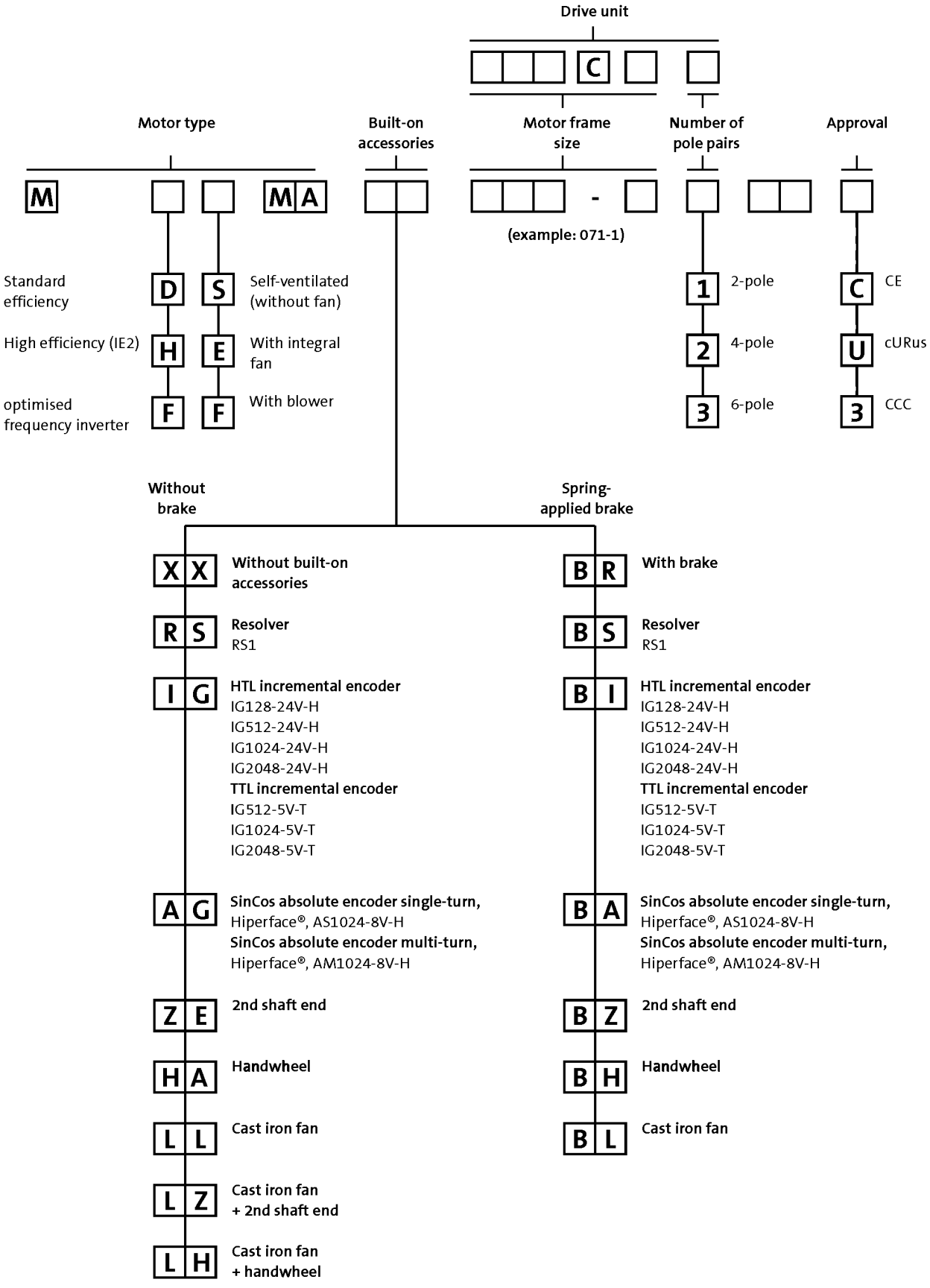
Drive unit
C
Motor type
Built-on accessories
Motor frame size
Number of pole pairs
Approval
M
M A
-
(example: 071-1)
Standard efficiency
D
S
Self-ventilated (without fan)
High efficiency (IE2)
H
E
With integral fan
optimised frequency inverter
F
F
With blower
1
2-pole
2
4-pole
3
6-pole
C
CE
U
cURus
3
CCC
Without brake
Spring-applied brake
X X
Without built-on accessories
R S
Resolver
RS1
I G
HTL incremental encoder
IG128-24V-H
IG512-24V-H
IG1024-24V-H
IG2048-24V-H
TTL incremental encoder
IG512-5V-T
IG1024-5V-T
IG2048-5V-T
A G
SinCos absolute encoder single-turn,
Hiperface®, AS1024-8V-H
SinCos absolute encoder multi-turn,
Hiperface®, AM1024-8V-H
Z E
2nd shaft end
H A
Handwheel
L L
Cast iron fan
L Z
Cast iron fan
+ 2nd shaft end
L H
Cast iron fan
+ handwheel
B R
With brake
B S
Resolver
RS1
B I
HTL incremental encoder
IG128-24V-H
IG512-24V-H
IG1024-24V-H
IG2048-24V-H
TTL incremental encoder
IG512-5V-T
IG1024-5V-T
IG2048-5V-T
B A
SinCos absolute encoder single-turn,
Hiperface®, AS1024-8V-H
SinCos absolute encoder multi-turn,
Hiperface®, AM1024-8V-H
B Z
2nd shaft end
B H
Handwheel
B L
Cast iron fan

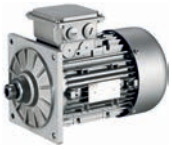

Product information

Special motors have been designed for direct attachment to Lenze gearboxes.

These motors are attached to the gearbox without the use of a clutch. Torque transmission between the toothing and the motor shaft is friction-locked via a tapered connection here.
This motor design means that the geared motors only require a small installation space.

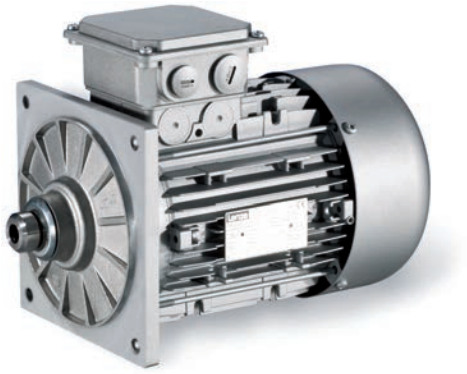

L-force MF three-phase AC motors are available in a power range from 0.55 to 22 kW and have been fully optimised for inverter operation.

The benefits for you:
- Up to sizes smaller than standard three-phase AC motors
- The motors exceed the minimum efficiency levels of efficiency class IE2
- Large speed setting range: 1:24 (without field weakening)
- Dynamic thanks to a low moment of inertia

Basic versions
- The thermal sensors integrated as standard allow for permanent temperature monitoring and are coordinated to the motor winding's temperature class F (155°C).
- The motors of the basic version are adapted to ambient conditions by enclosure IP55.
- In tough operating conditions, the surface and corrosion protection system is provided to reliably protect the motor from corrosive media.

Options
- Various brake sizes – each available with several braking torques – can be combined with the three-phase AC motors.
- The LongLife version of the brake can easily reach 10 x 10^6 switching cycles.
- A resolver and various incremental and absolute value encoders can be fitted for speed and position detection.
- For fast commissioning, the motors are also available with connectors for the power connection, brake, blower and feedback.
- Instead of an integral fan, the motor can optionally be equipped with a blower. No torque reduction is then necessary, even at speeds below 20 Hz.
- For drive tasks in decentralised applications, the motor can be ordered with the motec inverter connected to the terminal box.
- The motors are available with cURus, GOST-R, CCC and UkrSepro approval.
- Smooth start/braking is possible by increasing the motor's centrifugal mass with a cast iron fan.
- The motor can be equipped with a handwheel for manual setup or emergency operations.
- To protect the fan from falling objects, the fan cover can be equipped with a protection cover.
- A 2nd shaft end is available for further modifications.



Functions and features

Size				
Motor	063	071	080	090
Spring-applied brake				
Design	Standard or LongLife design Reduced or standard braking torque With rectifier With manual release lever Low noise		Standard or LongLife design Reduced, standard or increased braking torque With rectifier With manual release lever Low noise	
Feedback				
Design	Resolver Incremental encoder Absolute value encoder (multi-turn)			
Thermal sensor				
Thermal contact	TKO			
Thermal detector	KTY83-110 KTY84-130			
PTC thermistor	PTC			
Motor connection				
Power connection	Terminal box ICN connector HAN10E connector HAN modular connector			
Brake connection	Terminal box ICN connector HAN modular connector HAN10E connector			
Blower connection	Terminal box ICN connector			
Feedback connection	Terminal box ICN connector			
Temperature sensor connection	Terminal box TKO or PTC at connector in the power connection KTY at connector in the feedback connection			
Shaft bearings				
Position of the locating bearing	Standard motors (B3, B5, B14): side B Motors for gearbox direct mounting: side A			
Bearing type	Deep-groove ball bearing with high-temperature resistant grease, 2 sealing discs or cover plates			
Colour				
	Not coated Primed Paint in various corrosion-protection designs in accordance with RAL colours			
Further options				
	Protection cover	Protection cover 2nd shaft end		



Functions and features

Size			
Motor	100	112	132
Spring-applied brake			
Design	Standard or LongLife design Reduced, standard or increased braking torque With rectifier With manual release lever Low noise	Standard design Reduced, standard or increased braking torque With rectifier With manual release lever Low noise	
Feedback			
Design	Resolver Incremental encoder Absolute value encoder (multi-turn)		
Thermal sensor			
Thermal contact	TKO		
Thermal detector	KTY83-110 KTY84-130		
PTC thermistor	PTC		
Motor connection			
Power connection	Terminal box ICN connector HAN10E connector HAN modular connector	Terminal box	Terminal box HAN modular connector
Brake connection	Terminal box ICN connector HAN modular connector HAN10E connector	Terminal box	Terminal box HAN modular connector
Blower connection	Terminal box ICN connector		
Feedback connection	Terminal box ICN connector		
Temperature sensor connection	Terminal box TKO or PTC at connector in the power connection KTY at connector in the feedback connection	Terminal box KTY at connector in the feedback connection	
Shaft bearings			
Position of the locating bearing	Standard motors (B3, B5, B14): side B Motors for gearbox direct mounting: side A		
Bearing type	Deep-groove ball bearing with high-temperature resistant grease, 2 sealing discs or cover plates		
Colour			
	Not coated Primed Paint in various corrosion-protection designs in accordance with RAL colours		
Further options			
	Protection cover 2nd shaft end		



Functions and features

Surface and corrosion protection

For optimum protection of three-phase AC motors against ambient conditions, the surface and corrosion protection system (OKS) offers tailor-made solutions.

Various surface coatings ensure that the motors operate reliably even at high air humidity, in outdoor installation or in the presence of atmospheric impurities. Any colour from the RAL Classic collection can be chosen for the top coat. The three-phase AC motors are also available unpainted (no surface and corrosion protection).

Surface and corrosion protection system	Applications	Measures
OKS-G (primed)	• Dependent on subsequent top coat applied	• 2K PUR priming coat (grey)
OKS-S (small)	• Standard applications • Internal installation in heated buildings • Air humidity up to 90%	• Surface coating as per corrosivity category C1 (in line with EN 12944-2)
OKS-M (medium)	• Internal installation in non-heated buildings • Covered, protected external installation • Air humidity up to 95%	• Surface coating as per corrosivity category C2 (in line with EN 12944-2)
OKS-L (high)	• External installation • Air humidity above 95% • Chemical industry plants • Food industry	• Surface coating as per corrosivity category C3 (in line with EN 12944-2) • Blower cover and B end shield additionally primed • Screws zinc-coated • Cable glands with gaskets • Corrosion-resistant brake with cover ring, stainless friction plate, and chrome-plated armature plate (on request) Optional measures: • Motor recesses sealed off (on request)

Structure of surface coating

Surface and corrosion protection system	Corrosivity category	Surface coating	Colour
	DIN EN ISO 12944-2	Structure	
Without OKS (uncoated)			
OKS-G (primed)		2K PUR priming coat	
OKS-S (small)	C1	2K-PUR top coat	Standard: RAL 7012 Optional: RAL Classic
OKS-M (medium)	C2	2K PUR priming coat 2K-PUR top coat	
OKS-L (high)	C3		

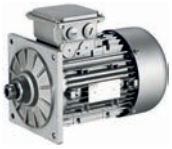

Motor – inverter assignment

Rated frequency 120 Hz

- ► Decentralised inverter 8400 motec (E84DVB)
- ► Inverter Drives 8400 (E84AV)

Rated power	Product key		
	Motor	Inverter	
P_N			
[kW]			
0.55	MF□□□□□063-32	E84DVB□5514S□□□2□	
0.75	MF□□□□□063-42	E84DVB□7514S□□□2□	
1.10	MF□□□□□071-32	E84DVB□1124S□□□2□	
1.50	MF□□□□□071-42	E84DVB□1524S□□□2□	
2.20	MF□□□□□080-32	E84DVB□2224S□□□2□	
3.00	MF□□□□□080-42	E84DVB□3024S□□□2□	
4.00	MF□□□□□090-32	E84DVB□4024S□□□2□	
5.50	MF□□□□□100-12	E84DVB□5524S□□□2□	
7.50	MF□□□□□100-32	E84DVB□7524S□□□2□	
11.0	MF□□□□□112-22		
15.0	MF□□□□□132-12		
18.5	MF□□□□□132-22		
22.0	MF□□□□□132-32		

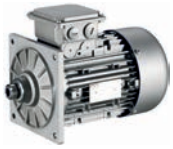

Dimensioning

Torque derating at low motor frequencies

Motor size-dependent torque reduction, taking into account the thermal response during operation on the inverter.

Torque characteristics

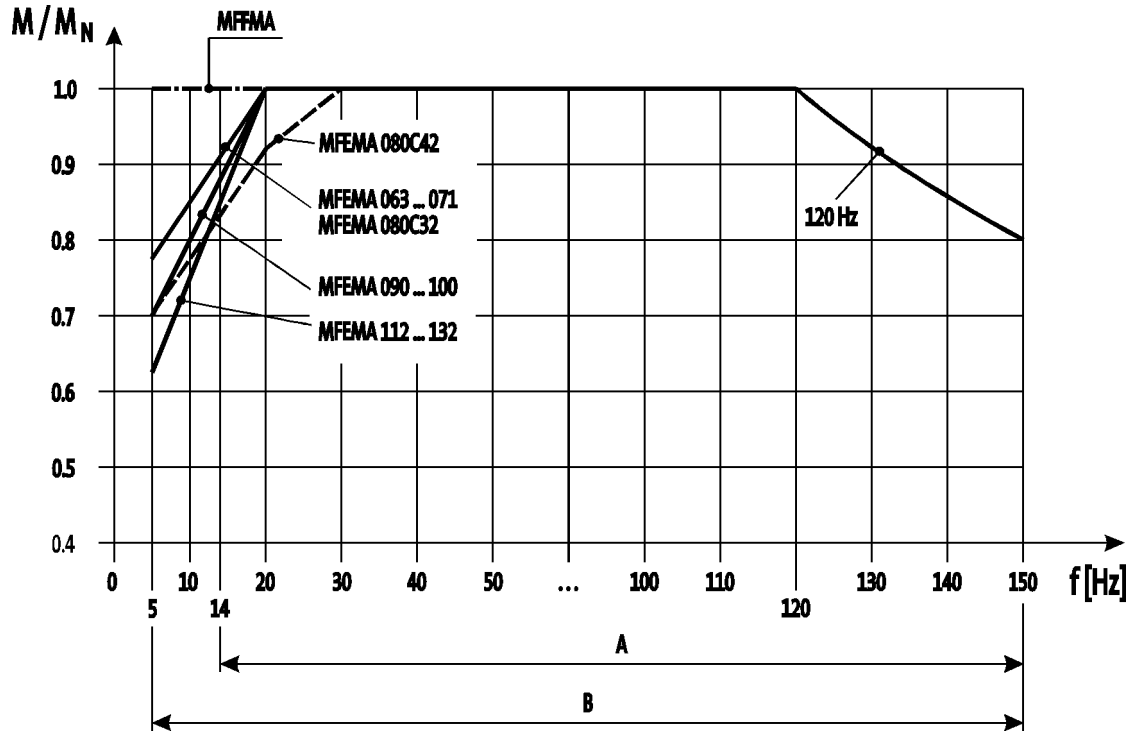

A = Operation with integral fan and brake
B = Operation with integral fan and brake control "Holding current reduction"

► The motor specifications stated in this catalogue for inverter operation apply to operation with a Lenze inverter. If you are uncertain, get in touch with the manufacturer of the inverter to ask whether the device is capable of driving the motor with the stated specifications (e.g. setting range, base frequency).

You can use the Drive Solution Designer for precise drive dimensioning.

The Drive Solution Designer helps you to carry out a fast and high-quality drive dimensioning.
The software includes well-founded and proven knowledge on drive applications and electro-mechanical drive components.

Please contact your Lenze sales office.

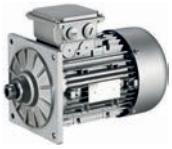

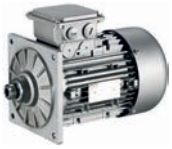

Standards and operating conditions

Enclosure			
EN 60529			IP55
Approval			
Class			cURus CCC GOST-R UkrSepro
Temperature class			
IEC/EN 60034-1; utilisation			B
IEC/EN 60034-1; insulation system (enamel-insulated wire)			F
Min. ambient operating temperature			
	$T_{opr,min}$	[°C]	-20
Max. ambient operating temperature			
	$T_{opr,max}$	[°C]	40
With power reduction	$T_{opr,max}$	[°C]	60
Site altitude			
Amsl	H_{max}	[m]	4000
Max. speed			
	n_{max}	[r/min]	4500



Rated data for 120 Hz

4-pole motors

	P_N	n_N	$U_{N,\Delta}$	$I_{N,\Delta}$	$U_{N,Y}$	$I_{N,Y}$
			± 10 %		± 10 %	
	[kW]	[r/min]	[V]	[A]	[V]	[A]
MF□□□□□063-32	0.55	3440	200	3.20	345	1.80
MF□□□□□063-42	0.75	3400	210	4.00	370	2.30
MF□□□□□071-32	1.10	3490	200	5.50	345	3.20
MF□□□□□071-42	1.50	3450	205	6.80	360	3.90
MF□□□□□080-32	2.20	3500	200	9.10	345	5.30
MF□□□□□080-42	3.00	3480	210	11.4	370	6.60
MF□□□□□090-32	4.00	3480			370	8.50
MF□□□□□100-12	5.50	3525			340	12.9
MF□□□□□100-32	7.50	3515			375	15.9
MF□□□□□112-22	11.0	3530			370	23.5
MF□□□□□132-12	15.0	3560			370	31.2
MF□□□□□132-22	18.5	3560			360	39.0
MF□□□□□132-32	22.0	3550			380	44.5

	M_N	M_{max}	cos ϕ	$\eta_{75\,\%}$	$\eta_{100\,\%}$	J [1)]	m [1)]
	[Nm]	[Nm]		[%]	[%]	[kgcm²]	[kg]
MF□□□□□063-32	1.53	6.00	0.68	75.0	75.0	3.70	4.40
MF□□□□□063-42	2.11	8.00	0.69	79.6	79.6	3.70	4.40
MF□□□□□071-32	3.01	12.0	0.77	81.4	81.4	12.8	6.40
MF□□□□□071-42	4.15	16.0	0.80	82.8	82.8	12.8	6.40
MF□□□□□080-32	6.00	24.0	0.86	84.3	84.3	28.0	11.0
MF□□□□□080-42	8.20	32.0	0.86	85.5	85.5	28.0	11.0
MF□□□□□090-32	10.9	44.0	0.85	87.0	86.6	32.0	18.0
MF□□□□□100-12	14.9	60.0	0.81	87.9	87.7	61.0	26.5
MF□□□□□100-32	20.3	80.0	0.81	88.9	88.7	61.0	26.5
MF□□□□□112-22	29.7	120	0.78	89.8	89.8	107	38.0
MF□□□□□132-12	40.3	160	0.84	88.9	90.6	336	66.0
MF□□□□□132-22	49.6	200	0.84	89.9	91.2	336	66.0
MF□□□□□132-32	59.2	240	0.83	90.5	91.6	336	66.0

[1)] Without accessories



Dimensions, self-ventilated (4-pole)

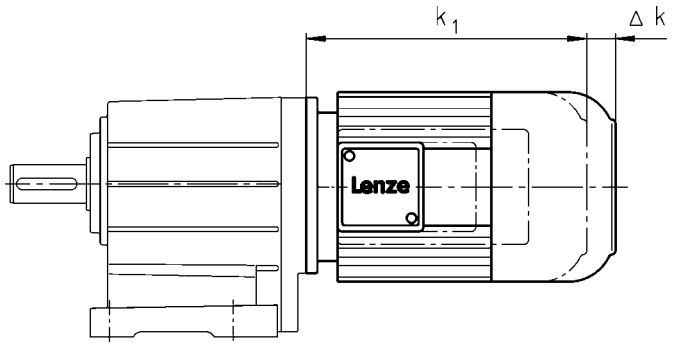

	Motor type			
	MFEMAXX	MFEMABR	MFEMABS MFEMABI MFEMABA	MFEMARS MFEMAIG MFEMAAG
Motor frame size				
	Δ k	Δ k	Δ k	Δ k
	[mm]	[mm]	[mm]	[mm]
063-32 063-42	0	40	103	56
071-32 071-42		52	96	52
080-32 080-42		73	111	111
090-32		68	105	87
100-12 100-32		76	101	81
112-22		90	120	80
132-12 132-22 132-32		110	125	103

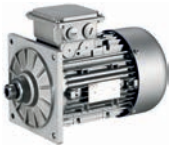

Dimensions, forced ventilated (4-pole)

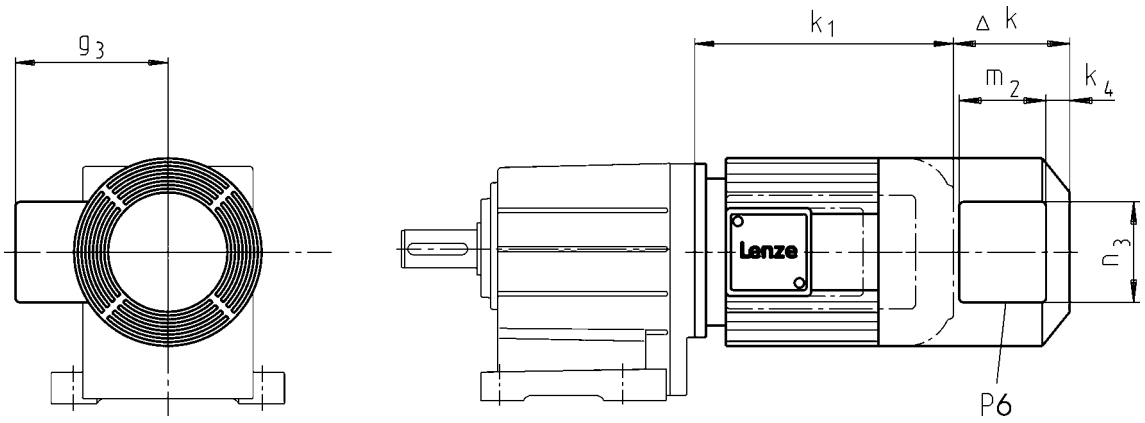

Motor type									
	MFFMAXX	MFFMABR	MFFMABS MFFMABI MFFMABA	MFFMARS MFFMAIG MFFMAAG					

Motor frame size									
	Δ k	Δ k	Δ k	Δ k	k_4	g_3	m_2	n_3	P_6
	[mm]	[mm]	[mm]	[mm]	[mm]	[mm]	[mm]	[mm]	[mm]
063-32 063-42	128	170	170	128	12	115	95	105	1x M16x1.5
071-32 071-42		165	165			122			
080-32 080-42		183	183		13	132	96	106	
090-32		181	181		22	141	95	105	
100-12 100-32	109	170	170	109		150			
112-22	102	183	183	183		162			
132-12 132-22 132-32	115	202	202	202	32	182			



Dimensions, 8400 motec inverter

Rated frequency 120 Hz

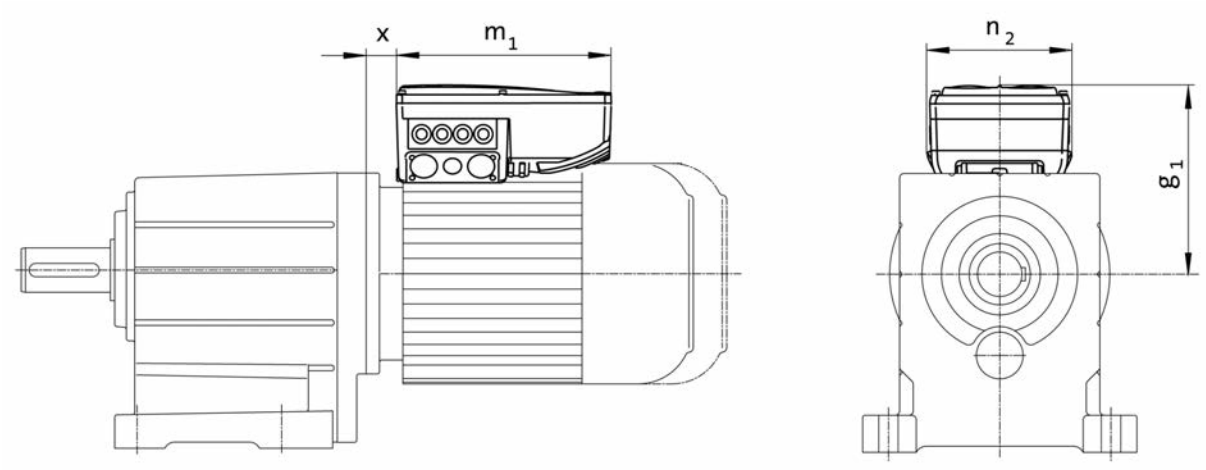

Product key					
Motor	Inverter				
		$g_{1,\ 120Hz}$	$m_{1,\ 120Hz}$	$n_{2,\ 120Hz}$	x_{120Hz}
		[mm]	[mm]	[mm]	[mm]
MF□□□□□063-32	E84DVB□5514S□□□2□	154	241	161	18.8
MF□□□□□063-42	E84DVB□7514S□□□2□				
MF□□□□□071-32	E84DVB□1124S□□□2□	163			21.0
MF□□□□□071-42	E84DVB□1524S□□□2□				
MF□□□□□080-32	E84DVB□2224S□□□2□	201	260	176	24.5
MF□□□□□080-42	E84DVB□3024S□□□2□				
MF□□□□□090-32	E84DVB□4024S□□□2□	261	325	195	16.0
MF□□□□□100-12	E84DVB□5524S□□□2□	272			17.1
MF□□□□□100-32	E84DVB□7524S□□□2□				

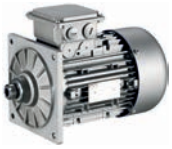



Spring-applied brake

Three-phase AC motors can be fitted with a spring-applied brake. This is activated after the supply voltage is switched off (closed-circuit principle). For optimum adjustment of the brake motor to the application, a range of braking torques and control modes is available for every motor frame size. For applications with very high operating frequencies the brake is also available in a LongLife version, with reinforced mechanical brake components.

Features

Versions
- **Standard**
  - 1 x 10^6 repeating switching cycles
  - 1 x 10^6 reversing switching cycles
- **LongLife**
  - 10 x 10^6 repeating switching cycles
  - 15 x 10^6 reversing switching cycles

Control
- DC supply
- AC supply via rectifier in the terminal box

Enclosure
- Without manual release IP55
- With manual release IP54

Friction lining
- Non-asbestos, low wearing

Options
- Manual release
- UL/CSA approval
- Noise-reduced

Motor – brake assignment

Design	Standard		LongLife	
Motor frame size	**Size**	**Rated torque**	**Size**	**Rated torque**
	Brake		Brake	
		M_k		M_k
		[Nm]		[Nm]
063-32	06	2.50	06	4.00
063-42	06	4.00		
071-32	06	2.50	06	4.00
	06	4.00	08	3.50
	08	3.50		
071-42	06	2.50	06	4.00
	06	4.00	08	3.50
	08	3.50	08	8.00
	08	8.00		
080-32	08	3.50	08	8.00
	08	8.00	10	7.00
	10	7.00		
080-42	08	3.50	08	8.00
	08	8.00	10	7.00
	10	7.00	10	16.0
	10	16.0		

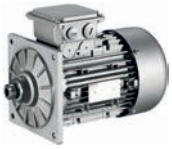

Spring-applied brake

Motor – brake assignment

Design	Standard	LongLife

Motor frame size	Size	Rated torque	Size	Rated torque
	Brake		Brake	
		M_k		M_k
		[Nm]		[Nm]
090-32	08 08 10 10 10	3.50 8.00 7.00 16.0 23.0	08 10 10	8.00 7.00 16.0
100-12	10 10 12 12	7.00 16.0 14.0 32.0	10 12 12	16.0 14.0 32.0
100-32	10 10 12 12 12	7.00 16.0 14.0 32.0 46.0		
112-22	12 12 14 14	14.0 32.0 35.0 60.0		
132-12	14 14 16 16	35.0 60.0 60.0 80.0		
132-22 132-32	14 14 16 16 16	35.0 60.0 60.0 80.0 100		

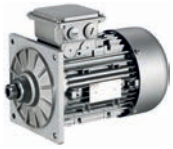

Spring-applied brake

Direct connection without rectifier

If the brake is activated directly without a rectifier, a freewheeling diode or a spark suppressor is required to protect against induction peaks.

- Supply voltages
  DC 24 V
  DC 180 V
  DC 205 V

Connection via mains voltage with brake rectifier

If the brake is not directly supplied with DC voltage, a rectifier is required. This is included in the scope of supply and is located in the terminal box of the motor. The rectifier converts the AC voltage of the connection into DC voltage. The following rectifiers are available:

Half-wave rectifier, 6-pole

- Ratio of supply voltage to brake coil voltage = 2.22
- Approved by UL/CSA
- Supply voltages
  AC 230 V
  AC 400 V
  AC 460 V



Bridge rectifier, 6-pole

- Ratio of supply voltage to brake coil voltage = 1.11
- Supply voltage
  AC 230 V



Bridge/half-wave rectifier, 6-pole

- Ratio of supply voltage to brake coil voltage
  up to overexcitation time = 1.11
  beyond overexcitation time = 2.22



Supply voltages:

- AC 230 V
- AC 400 V

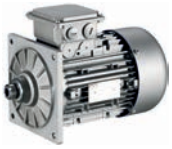

Spring-applied brake

Connection via mains voltage with brake rectifier

Bridge/half-wave rectifier, 6-pole
- Ratio of supply voltage to brake coil voltage
  up to overexcitation time = 1.11
  beyond overexcitation time = 2.22



Supply voltages:
- AC 230 V
- AC 400 V

During the switching operation the bridge/half-wave rectifier functions as a bridge rectifier for the overexcitation time $t_{ü}$ and then as a half-wave rectifier. This combination optimises the performance of the brake – depending on the assignment of brake coil voltage and supply voltage:

- **Short-time overexcitation of the brake coil**
  Activating the brake coil for the overexcitation time $t_{ü}$ with twice the rated voltage allows the disengagement time to be reduced. The brake opens more quickly and wear on the friction lining is reduced.
  These features make this activation version particularly suitable for lifting applications. It is therefore only available in combination with a brake with increased braking torque.
- **Holding current reduction (cold brake)**
  By reducing the holding current, the bridge/half-wave rectifier is able to reduce the power input to the open brake. As the brake heats up less, this type of activation is known as "cold brake".



Spring-applied brake

Permissible friction energy

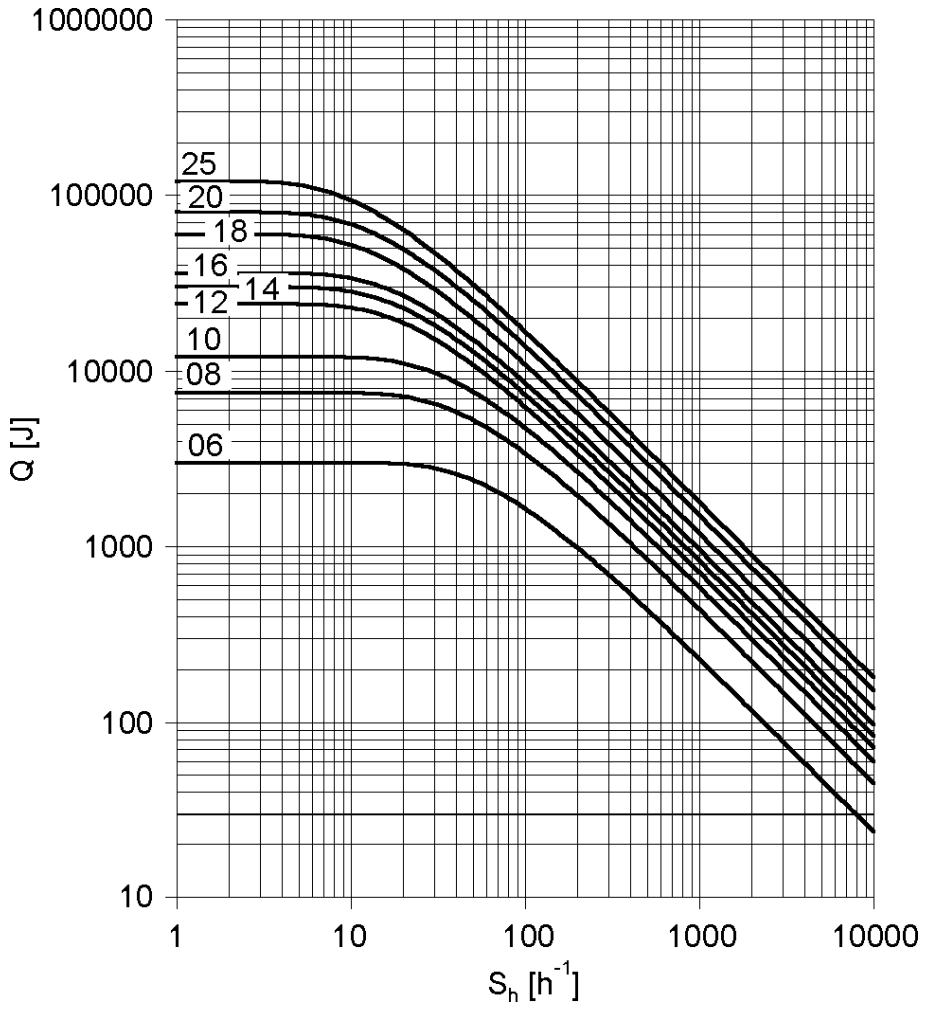

Q =Switching energy per switching cycle
S_h =Operating frequency
Brake size = 06 to 25

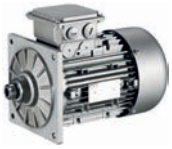

Spring-applied brake

Rated data with reduced braking torque

► Please enquire for braking torques and maximum switching work values not listed here.

Size			06	08	10	12	14	16	18	20	25
Power input											
	P_{in}	[kW]	0.020	0.025	0.030	0.040	0.050	0.055	0.085	0.10	0.11
Braking torque											
100	M_B	[Nm]	2.50	3.50	7.00	14.0	35.0	60.0	80.0	145	265
1000	M_B	[Nm]	2.30	3.10	6.10	12.0	30.0	50.0	65.0	115	203
1200	M_B	[Nm]	2.30	3.10	6.00	12.0	29.0	48.0	63.0	112	199
1500	M_B	[Nm]	2.20	3.00	5.80	11.0	28.0	47.0	61.0	109 [1)]	193 [1)]
1800	M_B	[Nm]	2.10	2.90	5.70	11.0	28.0	46.0	60.0 [1)]		
3000	M_B	[Nm]	2.00	2.80	5.30	10.0	26.0 [1)]	43.0 [1)]			
3600	M_B	[Nm]	2.00	2.70	5.20	10.0 [1)]					
Maximum switching energy											
100	Q_E	[KJ]	3.00	7.50	12.0	24.0	30.0	36.0	60.0	80.0	120
1000	Q_E	[KJ]	3.00	7.50	12.0	24.0	30.0	36.0	60.0	80.0	120
1200	Q_E	[KJ]	3.00	7.50	12.0	24.0	30.0	36.0	60.0	80.0	120
1500	Q_E	[KJ]	3.00	7.50	12.0	24.0	30.0	36.0	60.0	24.0 [1)]	36.0 [1)]
1800	Q_E	[KJ]	3.00	7.50	12.0	24.0	30.0	36.0	36.0 [1)]		
3000	Q_E	[KJ]	3.00	7.50	12.0	24.0	18.0 [1)]	11.0 [1)]			
3600	Q_E	[KJ]	3.00	7.50	12.0	7.00 [1)]					
Transition operating frequency											
	$S_{hü}$	[1/h]	79.0	50.0	40.0	30.0	28.0	27.0	20.0	19.0	15.0
Moment of inertia											
	J	[kgcm²]	0.015	0.061	0.20	0.45	0.63	1.50	2.90	7.30	20.0
Mass											
	m	[kg]	0.90	1.50	2.60	4.20	5.80	8.70	12.6	19.5	31.0

[1)] In the region of the load limit the value for friction energy Q_{BW} can be reduced to 40 %.

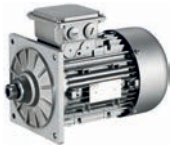

Spring-applied brake

Rated data with reduced braking torque

► Activation via half-wave or bridge rectifier

Size										
			06	08	10	12	14	16	18	20	25
Friction energy											
	Q_{BW}	[MJ]	113	210	264	706	761	966	1542	2322	3522
Delay time											
Engaging	t_{11}	[ms]	11.0	14.0	20.0	21.0	37.0	53.0	32.0	47.0	264
Rise time											
Braking torque	t_{12}	[ms]	13.0	10.0	17.0	19.0	22.0	30.0	20.0	100	120
Engagement time											
	t_1	[ms]	24.0		37.0	40.0	59.0	83.0	52.0	147	384
Disengagement time											
	t_2	[ms]	35.0	37.0	57.0	65.0	148	169	230	207	269

► Activation via bridge/half-wave rectifier

Design										
			Holding current reduction (cold brake)								
Size										
			06	08	10	12	14	16	18	20	25
Friction energy											
	Q_{BW}	[MJ]	113	210	264	706	761	966	1542	2322	3522
Overexcitation time											
	$t_{ü}$	[ms]	300				1300				
Min. rest time											
	t	[ms]	900				3900				
Delay time											
Engaging	t_{11}	[ms]	12.0	22.0	35.0	49.0	61.0	114	83.0	126	304
Rise time											
Braking torque	t_{12}	[ms]	14.0	16.0	30.0	45.0	37.0	65.0	52.0	269	138
Engagement time											
	t_1	[ms]	26.0	38.0	66.0	93.0	97.0	180	134	395	443
Disengagement time											
	t_2	[ms]	35.0	37.0	57.0	65.0	148	169	230	207	269

► The brake response and application times are guide values. The engagement time is 10 times longer with AC-side switching. With the maximum air gap the disengagement time t_2 – depending on the brake and control – is up to 4 times longer than the disengagement time with the rated air gap.

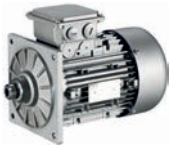

Spring-applied brake

Rated data with standard braking torque

► Please enquire for braking torques and maximum switching work values not listed here.

Size			06	08	10	12	14	16	18	20	25
Power input											
	P_{in}	[kW]	0.020	0.025	0.030	0.040	0.050	0.055	0.085	0.10	0.11
Braking torque											
100	M_B	[Nm]	4.00	8.00	16.0	32.0	60.0	80.0	150	260	400
1000	M_B	[Nm]	3.70	7.20	14.0	27.0	51.0	66.0	121	206	307
1200	M_B	[Nm]	3.60	7.00	14.0	27.0	50.0	65.0	118	201	300
1500	M_B	[Nm]	3.50	6.80	13.0	26.0	48.0	63.0	115	195 [1)]	291 [1)]
1800	M_B	[Nm]	3.40	6.70	13.0	26.0	47.0	61.0	112 [1)]		
3000	M_B	[Nm]	3.20	6.30	12.0	24.0	44.0 [1)]	57.0 [1)]			
3600	M_B	[Nm]	3.20	6.10	12.0	23.0 [1)]					
Maximum switching energy											
100	Q_E	[KJ]	3.00	7.50	12.0	24.0	30.0	36.0	60.0	80.0	120
1000	Q_E	[KJ]	3.00	7.50	12.0	24.0	30.0	36.0	60.0	80.0	120
1200	Q_E	[KJ]	3.00	7.50	12.0	24.0	30.0	36.0	60.0	80.0	120
1500	Q_E	[KJ]	3.00	7.50	12.0	24.0	30.0	36.0	60.0	24.0 [1)]	36.0 [1)]
1800	Q_E	[KJ]	3.00	7.50	12.0	24.0	30.0	36.0	36.0 [1)]		
3000	Q_E	[KJ]	3.00	7.50	12.0	24.0	18.0 [1)]	11.0 [1)]			
3600	Q_E	[KJ]	3.00	7.50	12.0	7.00 [1)]					
Transition operating frequency											
	$S_{hü}$	[1/h]	79.0	50.0	40.0	30.0	28.0	27.0	20.0	19.0	15.0
Moment of inertia											
	J	[kgcm²]	0.015	0.061	0.20	0.45	0.63	1.50	2.90	7.30	20.0
Mass											
	m	[kg]	0.90	1.50	2.60	4.20	5.80	8.70	12.6	19.5	31.0

[1)] In the region of the load limit the value for friction energy Q_{BW} can be reduced to 40 %.

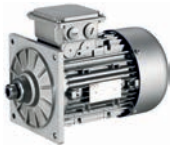

Spring-applied brake

Rated data with standard braking torque

► Activation via half-wave or bridge rectifier

Size			06	08	10	12	14	16	18	20	25
Friction energy											
	Q_{BW}	[MJ]	85.0	158	264	530	571	966	1542	2322	3522
Delay time											
Engaging	t_{11}	[ms]	15.0		28.0		17.0	27.0	33.0	65.0	110
Rise time											
Braking torque	t_{12}	[ms]	13.0	16.0	19.0	25.0		30.0	45.0	100	120
Engagement time											
	t_1	[ms]	28.0	31.0	47.0	53.0	42.0	57.0	78.0	165	230
Disengagement time											
	t_2	[ms]	45.0	57.0	76.0	115	210	220	270	340	390

► Activation via bridge/half-wave rectifier

Design			Holding current reduction (cold brake)								
Size			06	08	10	12	14	16	18	20	25
Friction energy											
	Q_{BW}	[MJ]	85.0	158	264	530	571	966	1542	2322	3522
Overexcitation time											
	$t_ü$	[ms]	300				1300				
Min. rest time											
	t	[ms]	900				3900				
Delay time											
Engaging	t_{11}	[ms]	16.0	25.0	31.0	48.0	33.0	58.0	80.0	102	154
Rise time											
Braking torque	t_{12}	[ms]	14.0	27.0	21.0	43.0	49.0	64.0	109	157	168
Engagement time											
	t_1	[ms]	30.0	52.0		90.0	82.0	122	189	259	322
Disengagement time											
	t_2	[ms]	45.0	57.0	76.0	115	210	220	270	340	390

► The brake response and application times are guide values. The engagement time is 10 times longer with AC-side switching. With the maximum air gap the disengagement time t_2 – depending on the brake and control – is up to 4 times longer than the disengagement time with the rated air gap.

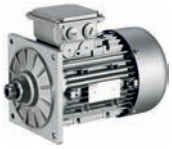

Spring-applied brake

Rated data with increased braking torque

► Please enquire for braking torques and maximum switching work values not listed here.

Size			10	12	14	16	16	18	20	20	25	25
Power input												
	P_{in}	[kW]	0.030	0.040	0.050	0.055	0.055	0.085	0.10	0.10	0.11	0.11
Braking torque												
100	M_B	[Nm]	23.0	46.0	75.0	100	125	200	315	400	490	600
1000	M_B	[Nm]	20.0	39.0	64.0	83.0	103	162	249	317	376	461
1200	M_B	[Nm]	20.0	39.0	62.0	81.0	101	158	244	309	367	449
1500	M_B	[Nm]	19.0	38.0	60.0	78.0	98.0	153	237 [1]	300 [1]	356 [1]	436 [1]
1800	M_B	[Nm]	19.0	37.0	59.0	77.0	96.0	150 [1]				
3000	M_B	[Nm]	17.0	34.0	55.0 [1]	71.0 [1]	89.0 [1]					
3600	M_B	[Nm]	17.0	33.0 [1]								
Maximum switching energy												
100	Q_E	[KJ]	12.0	24.0	30.0	36.0	36.0	60.0	80.0	80.0	120	120
1000	Q_E	[KJ]	12.0	24.0	30.0	36.0	36.0	60.0	80.0	80.0	120	120
1200	Q_E	[KJ]	12.0	24.0	30.0	36.0	36.0	60.0	80.0	80.0	120	120
1500	Q_E	[KJ]	12.0	24.0	30.0	36.0	36.0	60.0	24.0 [1]	24.0 [1]	36.0 [1]	36.0 [1]
1800	Q_E	[KJ]	12.0	24.0	30.0	36.0	36.0	36.0 [1]				
3000	Q_E	[KJ]	12.0	24.0	18.0 [1]	11.0 [1]	11.0 [1]					
3600	Q_E	[KJ]	12.0	7.00 [1]								
Transition operating frequency												
	$S_{hü}$	[1/h]	40.0	30.0	28.0	27.0	27.0	20.0	19.0	19.0	15.0	15.0
Moment of inertia												
	J	[kgcm²]	0.20	0.45	0.63	1.50	1.50	2.90	7.30	7.30	20.0	20.0
Mass												
	m	[kg]	2.60	4.20	5.80	8.70	8.70	12.6	19.5	19.5	31.0	31.0

[1] In the region of the load limit the value for friction energy Q_{BW} can be reduced to 40 %.

► Activation via half-wave or bridge rectifier

Size			10	12	14	16		18	20		25	
Friction energy												
	Q_{BW}	[MJ]	198	353	253	563	241	578	1596	580	2465	1409
Delay time												
Engaging	t_{11}	[ms]	10.0	16.0	11.0	22.0	17.0	24.0	46.0	17.0	77.0	38.0
Rise time												
Braking torque	t_{12}	[ms]	19.0	25.0		30.0		45.0	100		120	
Engagement time												
	t_1	[ms]	29.0	41.0	36.0	52.0	47.0	69.0	146	117	197	158
Disengagement time												
	t_2	[ms]	109	193	308	297	435	356	378	470	451	532



Spring-applied brake

Rated data with increased braking torque

► Activation via bridge/half-wave rectifier

Design			Holding current reduction (cold brake)									
Size			10	12	14	16		18	20		25	
Friction energy												
	Q_{BW}	[MJ]	198	353	253	563	241	578	1596	580	2465	1409
Overexcitation time												
	$t_ü$	[ms]	300			1300						
Min. rest time												
	t	[ms]	900			3900						
Delay time												
Engaging	t_{11}	[ms]	24.0	27.0	17.0	41.0	21.0	60.0	69.0	17.0	123	85.0
Rise time												
Braking torque	t_{12}	[ms]	44.0	43.0	37.0	55.0	37.0	113	148	100	190	270
Engagement time												
	t_1	[ms]	68.0	70.0	54.0	97.0	57.0	173	217	334	313	355
Disengagement time												
	t_2	[ms]	109	193	308	297	435	356	378	470	451	532

Design			Over-excitation									
Size			10	12	14	16		18	20		25	
Friction energy												
	Q_{BW}	[MJ]	264	706	761	966		1542	2322		3522	
Overexcitation time												
	$t_ü$	[ms]	300			1300						
Min. rest time												
	t	[ms]	900			3900						
Delay time												
Engaging	t_{11}	[ms]	29.0	54.0	31.0	70.0	46.0	86.0	103	55.0	171	135
Rise time												
Braking torque	t_{12}	[ms]	53.0	87.0	68.0	93.0	83.0	160	222	319	266	430
Engagement time												
	t_1	[ms]	82.0	141	99.0	163	129	246	325	374	437	565
Disengagement time												
	t_2	[ms]	53.0	81.0	117	141	168	151	160	167	184	204

► The brake response and application times are guide values. The engagement time is 10 times longer with AC-side switching. With the maximum air gap the disengagement time t_2 – depending on the brake and control – is up to 4 times longer than the disengagement time with the rated air gap.



Spring-applied brake

Manual release lever

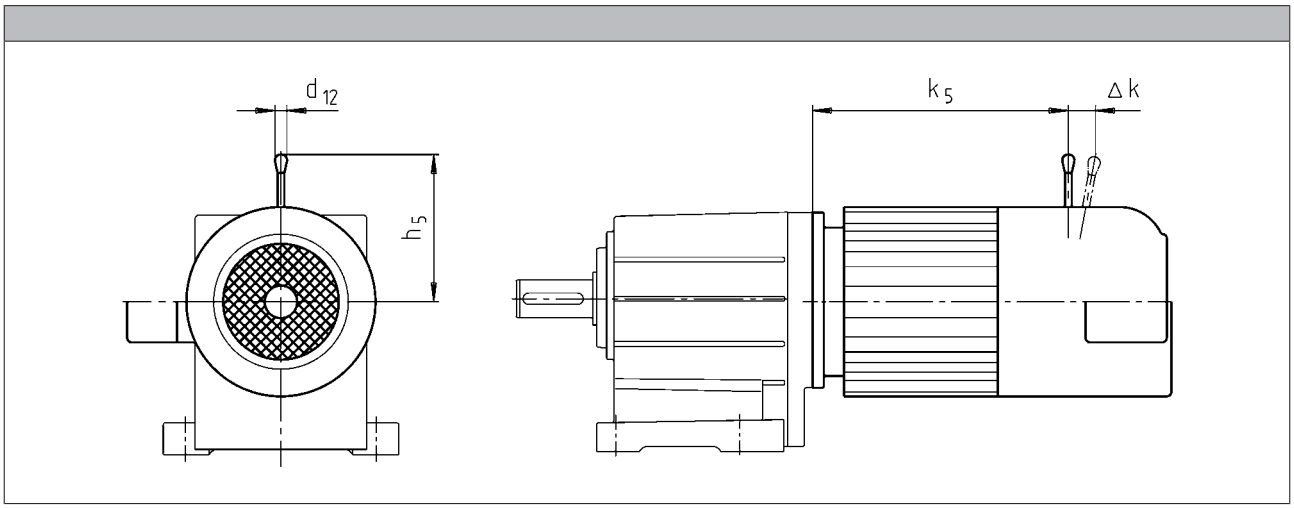

Motor frame size	Size				
	Brake				
		k_5	Δ k	h_5	d_{12}
		[mm]	[mm]	[mm]	[mm]
063-32 063-42	06	173	29	107	13.0
071-32 071-42	06 08	186 187	29 27	107 116	13.0 13.0
080-32 080-42	06 08	207 218	29 27	107 116	13.0 13.0
090-32	08 10	245 256	27 28	116 132	13.0 13.0
100-12 100-32	10 12	294 296	28 37	132 161	13.0 13.0
112-22	12 14	292 296	37 41	161 195	13.0 24.0
132-12 132-22 132-32	14 16	373 373	41 55	195 240	24.0 24.0

The following combinations with manual release lever and motor connection in the same position are not possible:

- HAN connector with connection in position 1
- Inverter motec
- Terminal box of motor sizes 071, 080, 090 for brake and retracting (M□□MA BR/BS/BA/BI)

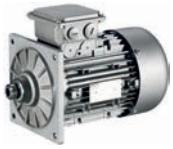

Resolver

Stator-fed resolver with two stator windings offset by 90° and one rotor winding with transformer winding.

► The three-phase AC motors with resolver cannot be used for speed-dependent safety functions in connection with the SM 301 safety module.

Product key				
				RS1
Accuracy				
			[']	-10 ... 10
Absolute positioning				
				1 revolution
Max. input voltage				
DC	$U_{in,max}$		[V]	10.0
Max. input frequency				
	$f_{in,max}$		[kHz]	4.00
Ratio				
Stator / rotor		± 5 %		0.30
Rotor impedance				
	Z_{ro}		[Ω]	51 + j90
Stator impedance				
	Z_{so}		[Ω]	102 + j150
Impedance				
	Z_{rs}		[Ω]	44 + j76
Min. insulation resistance				
At DC 500 V	R		[MΩ]	10.0
Number of pole pairs				
				1



Incremental encoder and SinCos absolute value encoder

► The three-phase AC motors with incremental encoders or SinCos absolute value encoders cannot be used for speed-dependent safety functions in connection with the SM 301 safety module.

Encoder type			HTL incremental				TTL incremental			SinCos absolute value
Product key			IG128-24V-H	IG512-24V-H	IG1024-24V-H	IG2048-24V-H	IG512-5V-T	IG1024-5V-T	IG2048-5V-T	AM1024-8V-H
Encoder type										Multi-turn
Pulses			128	512	1024	2048	512	1024	2048	1024
Output signals			HTL				TTL			1 Vss
Interfaces			A, B track	A, B, N track and inverted						Hiperface
Absolute revolutions			0							4096
Accuracy		[']	-22.5 ... 22.5	-2 ... 2						-0.8 ... 0.8
Min. input voltage										
DC	$U_{in,min}$	[V]	8.00				4.75			7.00
Max. input voltage										
DC	$U_{in,max}$	[V]	26.0	30.0			5.25			12.0
Max. current consumption										
	I_{max}	[A]	0.040	0.15						0.080
Limit frequency										
	f_{max}	[kHz]	30.0	160			300			200
Inverter assignment			E84AVSC E84AVHC	E84AVHC			E84AVTC E94A ECS EVS93			

Inverters
- Inverter Drives 8400 StateLine (E84AVSC)
- Inverter Drives 8400 HighLine (E84AVHC)
- Inverter Drives 8400 TopLine (E84AVTC)

Servo-Inverters
- Servo Drives 9400 (E94A)
- 9300 servo inverters (EVS93)
- Servo Drives ECS



Blowers

► The use of a blower enables operation below 20 Hz without torque derating.

Rated data for 50 Hz

Size	Number of phases	Connection method					
Motor							
			U_{min}	U_{max}	P_{max}	I_{max}	m
			[V]	[V]	[kW]	[A]	[kg]
063	1		230	277	0.027	0.11	2.00
	3	Δ	200	303	0.028	0.12	
		Y	346	525		0.070	
071	1		230	277	0.027	0.10	2.10
	3	Δ	200	303	0.031	0.11	
		Y	346	525		0.060	
080	1		230	277	0.029	0.11	2.30
	3	Δ	200	303	0.031		
		Y	346	525		0.060	
090	1		220	277	0.065	0.29	2.70
	3	Δ	200	303	0.091	0.38	
		Y	346	525		0.22	
100	1		220	277	0.066	0.28	3.00
	3	Δ	200	303	0.091	0.37	
		Y	346	525		0.22	
112	1		220	277	0.071	0.28	3.10
	3	Δ	200	303	0.097	0.35	
		Y	346	525		0.20	
132	1		230	277	0.098	0.40	4.20
	3	Δ	200	303	0.12	0.58	
		Y	346	525		0.33	
160	1		230	277	0.25	0.97	6.20
	3	Δ	200	303		0.87	
		Y	346	525		0.50	
180	1		230	277		0.97	8.00
	3	Δ	200	303		0.87	
		Y	346	525		0.50	

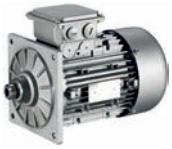

Blowers

Rated data for 50 Hz

Size	Number of phases	Connection method					
Motor							
			U_{min}	U_{max}	P_{max}	I_{max}	m
			[V]	[V]	[kW]	[A]	[kg]
200	1		230	277	0.25	0.97	8.00
	3	Δ	200	303		0.87	
		Y	346	525		0.50	
225		Δ	200	400	0.28	1.10	15.0
		Y	346	525	0.17	0.35	

Rated data for 60 Hz

Size	Number of phases	Connection method					
Motor							
			U_{min}	U_{max}	P_{max}	I_{max}	m
			[V]	[V]	[kW]	[A]	[kg]
063	1		230	277	0.032	0.12	2.00
	3	Δ	220	332	0.028	0.10	
		Y	380	575		0.060	
071	1		230	277	0.033	0.12	2.10
	3	Δ	220	332	0.029	0.10	
		Y	380	575		0.060	
080	1		230	277	0.037	0.14	2.30
	3	Δ	220	332	0.034	0.10	
		Y	380	575		0.060	
090	1		220	277	0.065	0.25	2.70
	3	Δ		332	0.077	0.33	
		Y	380	575		0.19	
100	1		220	277	0.075	0.30	3.00
	3	Δ		332	0.087	0.31	
		Y	380	575		0.18	
112	1		220	277	0.094	0.37	3.10
	3	Δ		332	0.10	0.31	
		Y	380	575		0.18	
132	1		230	277	0.15	0.57	4.20
	3	Δ	220	332		0.44	
		Y	380	575		0.25	
160		Δ	220	332	0.36	0.93	6.20
		Y	380	575		0.56	
180		Δ	220	332		0.93	8.00
		Y	380	575		0.56	
200		Δ	220	332		0.93	
		Y	380	575		0.56	
225		Δ	220	400	0.28	0.76	15.0
		Y	380	575	0.26	0.43	

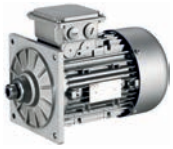

Temperature monitoring

► The thermal sensors are integrated in the windings. The use of an additional motor protection switch is recommended.

TKO thermal contacts

Function	Operating temperature	Min. reset temperature	Max. reset temperature	Max. input current	Max. input voltage
					AC
	T	T_{min}	T_{max}	$I_{in,max}$	$U_{in,max}$
	-5 ... 5				
	[°C]	[°C]	[°C]	[A]	[V]
NC contact	150	90.0	135	2.50	250

PTC thermistor

Function	Operating temperature	Rated resistance			Standard
		155 °C	-20 °C	140 °C	
	T	R_N	R_N	R_N	
	-5 ... 5				
	[°C]	[Ω]	[Ω]	[Ω]	
Sudden change in resistance	150	550	30.0	250	DIN 44080 DIN VDE 0660 Part 303

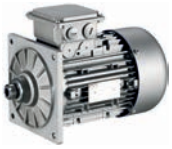

Temperature monitoring

KTY temperature sensor

	Function	Rated resistance			Max. input current	
		25 °C	150 °C	170 °C	25 °C	170 °C
		R_N	R_N	R_N	$I_{in,max}$	$I_{in,max}$
		[Ω]	[Ω]	[Ω]	[A]	[A]
KTY83-110	Continuous resistance change	1000	2225	2471	0.010	0.002
KTY84-130	Continuous resistance change	603	1334	1482	0.010	0.002

Variation of resistance

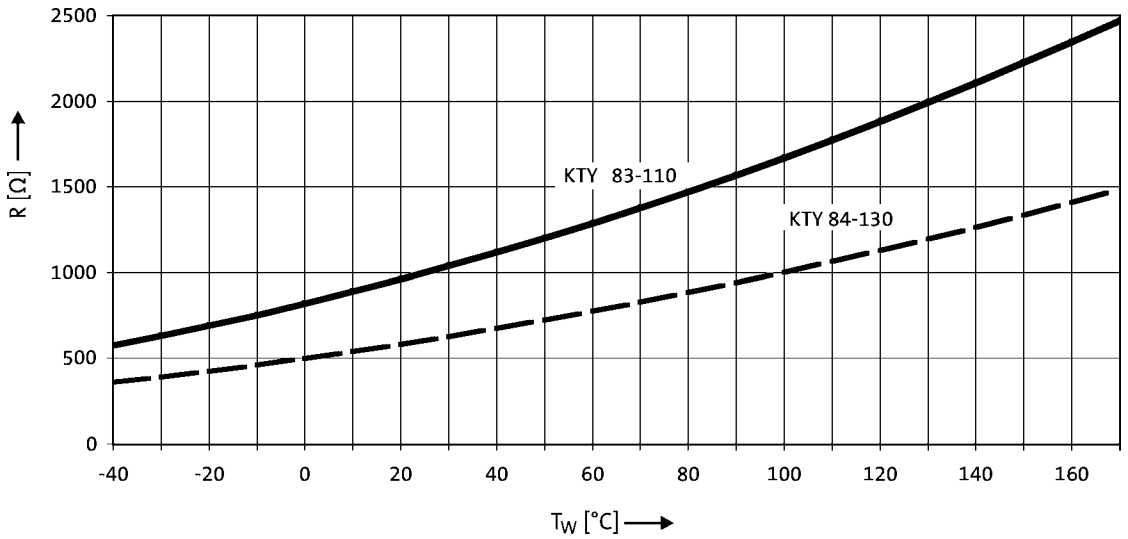

► If the detector is supplied with a measured current of 1 mA, the above relationship between the temperature and the resistance applies.



Terminal box

The MF three-phase AC motors are designed specifically for inverter operation. With a base frequency of 120Hz, the rated voltage has been specified at approximately 200 V in delta connection (up to 2.2 kW) and approximately 350V in star configurations.

In the standard version, the motors are connected in the terminal box. As an option, the motors are also available with the connectors described on the following pages as long as the permissible ratings are not exceeded.

Motor terminal box - built-on accessories assignment: 4-pole / 6-pole motors

Motor type	M□□MAXX	M□□MARS M□□MAIG M□□MAAG	M□□MAZE
Motor frame size			
	Terminal box		
063-32 063-42	KK1	KK2	
071-32 071-42	KK1	KK2	KK2
080-32 080-42	KK1	KK2	KK2
090-32	KK1	KK2	KK2
100-12 100-32	KK1	KK2	KK2
112-22	KK1	KK2	KK2
132-12 132-22 132-32	KK1	KK3	KK3

Motor type	M□□MABR	M□□MABS M□□MABI M□□MABA	M□□MABZ
Motor frame size			
	Terminal box		
063-32 063-42	KK2	KK3	
071-32 071-42	KK2	KK3	KK2
080-32 080-42	KK2	KK3	KK2
090-32	KK2	KK3	KK2
100-12 100-32	KK2	KK3	KK2
112-22	KK2	KK3	KK2
132-12 132-22 132-32	KK3	KK3	KK3

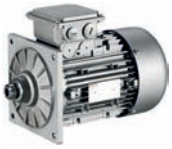

Terminal box

Dimensions of KK1

- ► For motors with motor terminal box KK1, the connector position can be selected in accordance with the terminal box position.
- ► If preferred positions are not specified in the order, the cable entry will be positioned as circled on the diagram below.

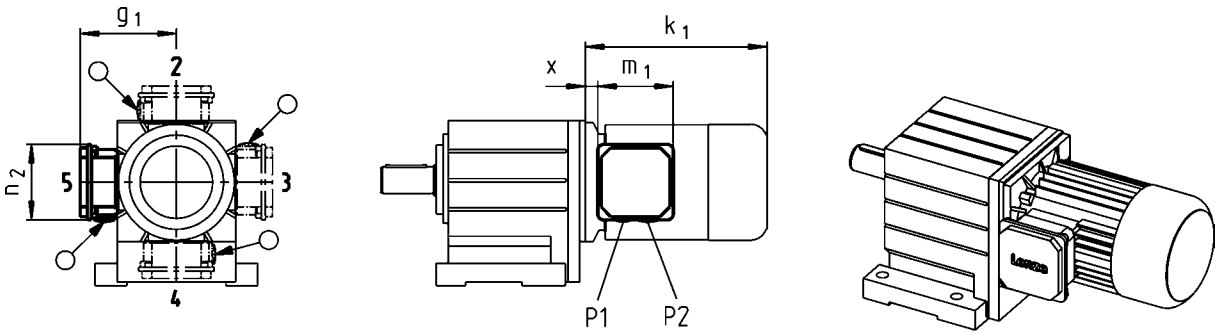

Size						
Motor						
	x	g_1	m_1	n_2	P_1	P_2
	[mm]	[mm]	[mm]	[mm]	[mm]	[mm]
063	21 12 [1)]	100 117 [1)]	75.0 93.0 [1)]	75.0 93.0 [1)]	M16x1.5 M20x1.5 [1)]	M20x1.5 M20x1.5
071	24 15 [1)]	109 126 [1)]				
080	14	150	115	115	M20x1.5	M25x1.5
090	19	157				
100	20	166				
112	22	176				
132	33	195	122	122	M32x1.5	M32x1.5

[1)] UL/CSA approval: cURus

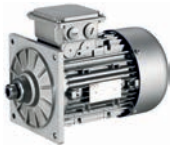

Terminal box

Cable entry position when using KK1

Terminal box in position 2

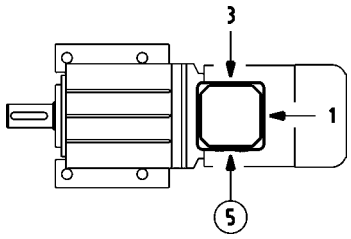

Terminal box in position 3

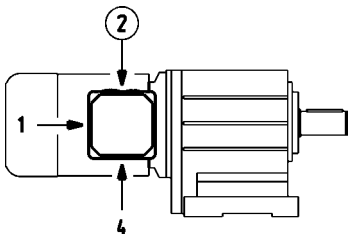

Terminal box in position 4

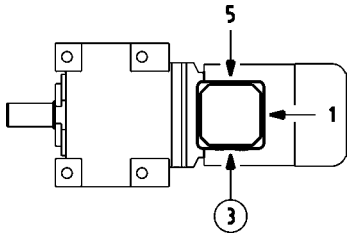

Terminal box in position 5

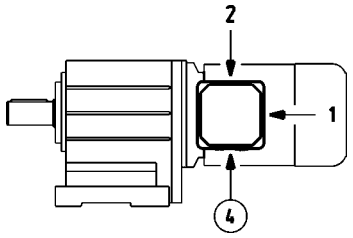

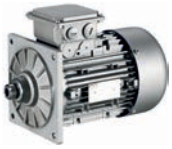

Terminal box

Dimensions of KK2

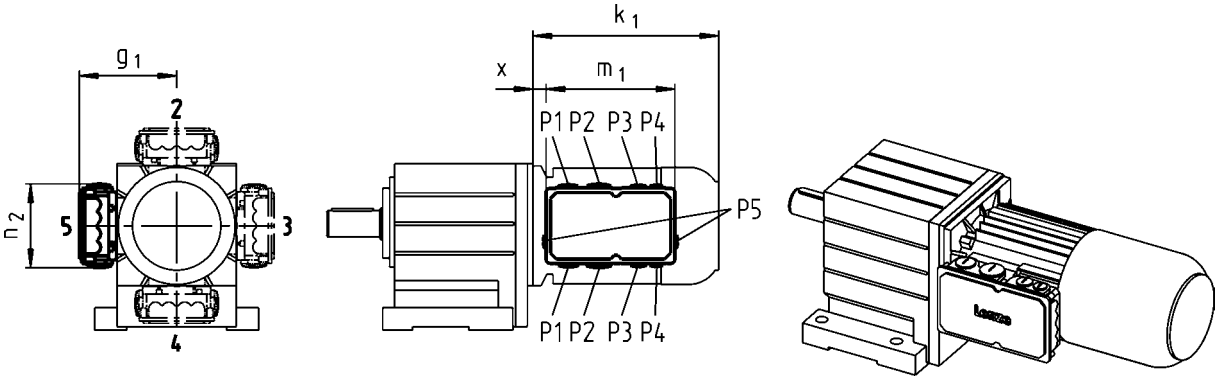

Size						
Motor						
	x	g_1	m_1	n_2	P_1	P_2
	[mm]	[mm]	[mm]	[mm]	[mm]	[mm]
063	13	107	136	103	M16x1.5	M20x1.5
071	15	118				
080	17	132	152	121	M20x1.5	M25x1.5
090	22	137				
100	23	147				
112	25	158				



Terminal box

Dimensions of KK3

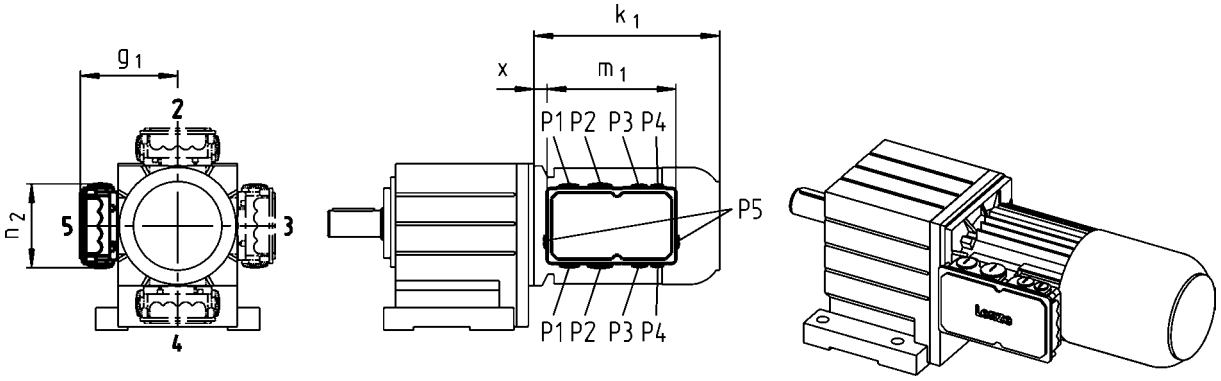

Size									
Motor									
	x	g_1	m_1	n_2	P_1	P_2	P_3	P_4	P_5
	[mm]	[mm]	[mm]	[mm]	[mm]	[mm]	[mm]	[mm]	[mm]
063	2	124	195	125	M25x1.5	M32x1.5	M20x1.5	M20x1.5	
071	5	133							
080	15	142							
090	20	147							
100	21	158							
112	23	168							
132	38	187							
160	35	210	226	127	M50x1.5	M16x1.5		M16x1.5	
180	73	230							
225	95	346	354	205		M63x1.5 [1)]	M50x1.5 [1)]		M16x1.5

[1)] Cable entry only possible at one position.
Terminal box position 2: cable entry at position 5.
Terminal box position 3: cable entry at position 2.
Terminal box position 4: cable entry at position 3.
Terminal box position 5: cable entry at position 4.

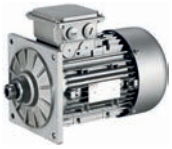

Plug connectors

ICN, HAN and M12 connectors (only for IG128-24V-H incremental encoder) are available for the three-phase AC motors.

ICN connector

A connector is used for power, brake and temperature monitoring. The connections to the feedback system and the blower each employ a separate connector.

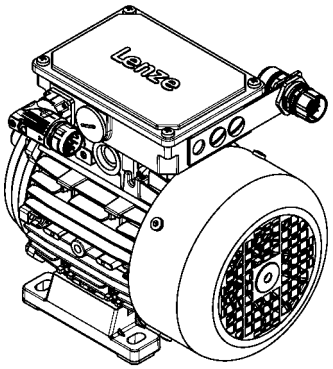

Connection for power, brake and temperature monitoring

The connectors can be rotated through 270° and are fitted with a bayonet catch for SpeedTec connectors. As this connector is also compatible with conventional union nuts, existing mating connectors can continue to be used without difficulty. The motor connection is determined in the terminal box and must be checked before commissioning.

► ICN 6-pole

Pin assignment			
Contact	Designation	Meaning	
1	BD1 / BA1	Brake +/AC	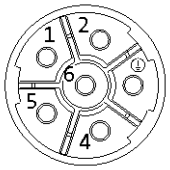
2	BD2 / BA2	Brake /AC	
PE	PE	PE conductor	
4	U	Phase U power	
5	V	Phase V power	
6	W	Phase W power	

► ICN 8-pole

Pin assignment			
Contact	Designation	Meaning	
1	U	Phase U power	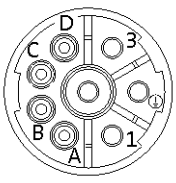
PE	PE	PE conductor	
3	V	Phase V power	
4	W	Phase W power	
A	TB1 / TP1 / R1	Thermal sensor: TKO/PTC/ +KTY	
B	TB2 / TP2 / R2	Thermal sensor: TKO/PTC/-KTY	
C	BD1 / BA1	Brake +/AC	
D	BD2 / BA2	Brake /AC	

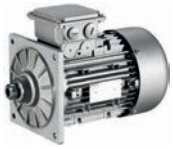

ICN connector

Feedback connection

All encoder systems (apart from IG128-24V-H) are also available with an ICN connector fixed to the motor terminal box for exceptionally fast commissioning. The connectors are fitted with a bayonet fixing, which is also compatible with conventional union nuts. Existing mating connectors can therefore continue to be used without difficulty.

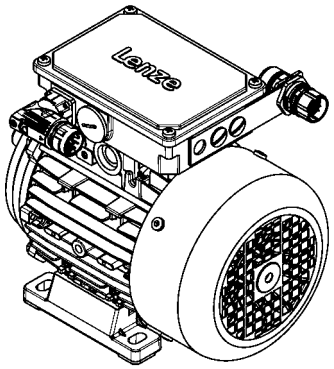

► Resolver

Pin assignment			
Contact	Designation	Meaning	
1	+Ref	Transformer windings	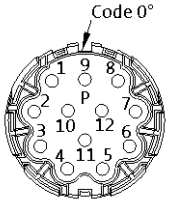
2	-Ref		
3	+VCC ETS	Supply: Electronic nameplate	
4	+COS	Cosine stator windings	
5	-COS		
6	+SIN	Sine stator windings	
7	-SIN		
8		Not assigned	
9			
10			
11	+KTY	KTY temperature sensor	
12	-KTY		

► Hiperface incremental encoder and SinCos absolute value encoder

Pin assignment			
Contact	Designation	Meaning	
1	B	Track B/+SIN	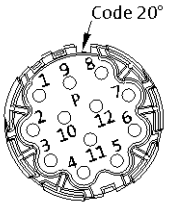
2	A^-	Track A inverse/-COS	
3	A	Track A/+COS	
4	$+U_B$	Supply +	
5	GND	Mass	
6	Z^-	Zero track inverse/-RS485	
7	Z	Zero track/+RS485	
8		Not assigned	
9	B^-	Track B inverse/-SIN	
10		Not assigned	
11	+KTY	KTY temperature sensor	
12	-KTY		

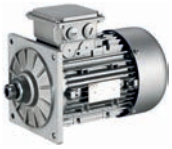

ICN connector

Motor terminal box with ICN connectors - built-on accessories assignment: 4-pole / 6-pole motors

Motor type	M□□MAXX	M□□MARS M□□MAIG M□□MAAG	M□□MAZE
Motor frame size			
	Terminal box		
063-32 063-42	KK1	KK2	
071-32 071-42	KK1	KK2	KK2
080-32 080-42	KK1	KK2	KK2
090-32	KK1	KK2	KK2
100-12 100-32	KK1	KK2	KK2

Motor type	M□□MABR	M□□MABS M□□MABI M□□MABA	M□□MABZ
Motor frame size			
	Terminal box		
063-32 063-42	KK2	KK3	
071-32 071-42	KK2	KK3	KK2
080-32 080-42	KK2	KK3	KK2
090-32	KK2	KK3	KK2
100-12 100-32	KK2	KK3	KK2



ICN connector

Dimensions of KK1

- ► For motors with connectors, the connector position can be selected in accordance with the terminal box position.
- ► If preferred positions are not specified in the order, the connector will be positioned as circled on the diagram below.

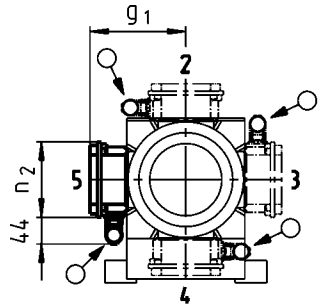

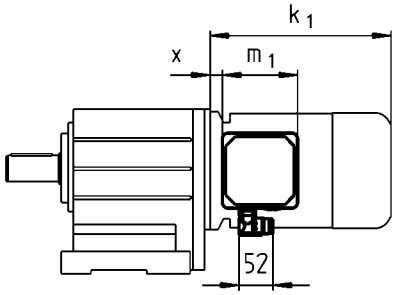

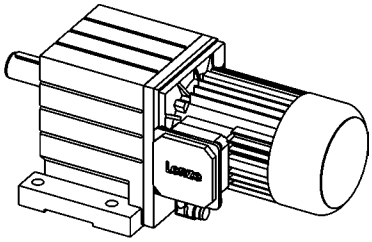

Size				
Motor				
	x	g_1	m_1	n_2
	[mm]	[mm]	[mm]	[mm]
063	12	117	93.0	93.0
071	15	126		
080	14	150	115	115
090	19	157		
100	20	166		
112	22	176		
132	33	195	122	122

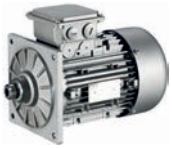

ICN connector

Connector position when using KK1

Terminal box in position 2

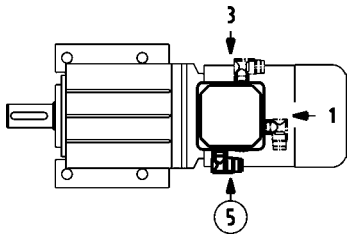

Terminal box in position 3

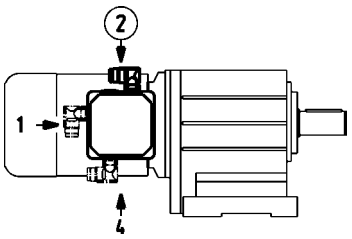

Terminal box in position 4

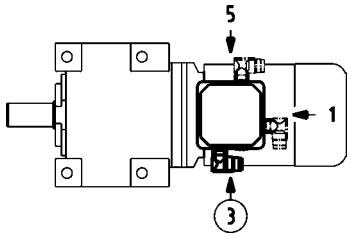

Terminal box in position 5

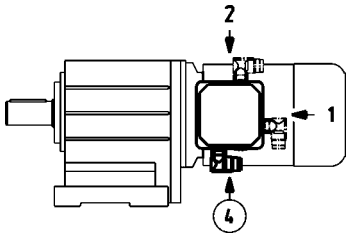



ICN connector

Dimensions of KK2/KK3

- For motors with connectors, the connector position can be selected in accordance with the terminal box position.
- If preferred positions are not specified in the order, the connector will be positioned as circled on the diagram below.

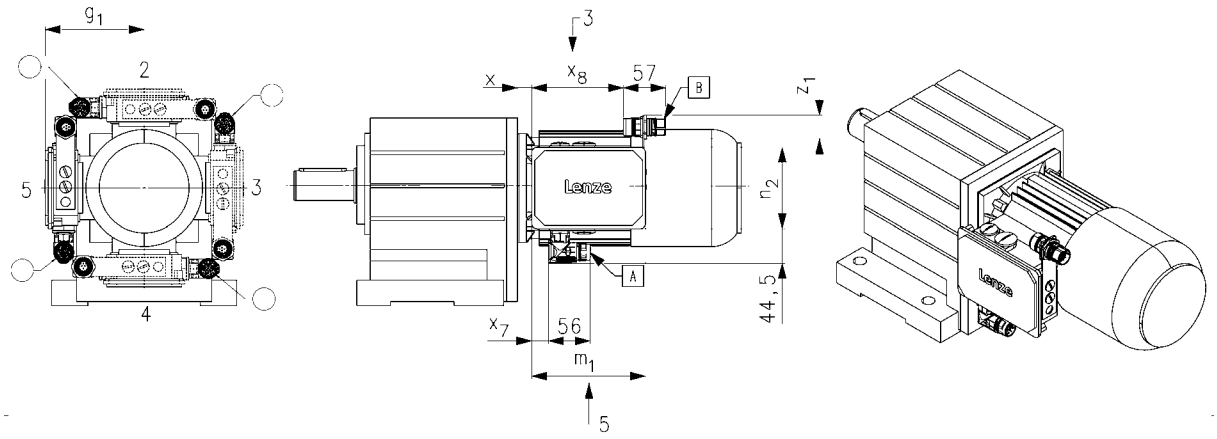

Size							
Motor							
	x	g_1	m_1	n_2	x_7	x_8	$z_{1, max}$
	[mm]	[mm]	[mm]	[mm]	[mm]	[mm]	[mm]
063	13	107	136	103	16	109	43
071	15	118					
080	17	132	152	121	23	125	41
090	22	137					
100	23	147					
112	25	158					
132	38	187	195	125	27	166	71

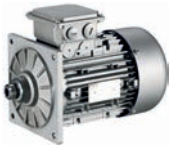

ICN connector

Connector position when using KK2/KK3

Terminal box in position 2

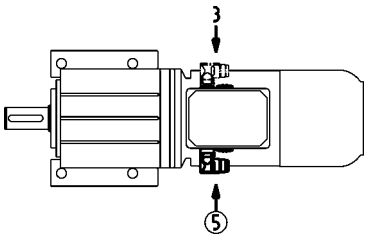

Terminal box in position 3

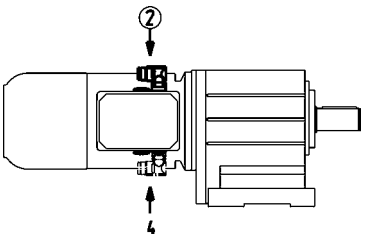

Terminal box in position 4

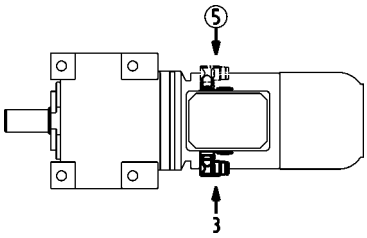

Terminal box in position 5

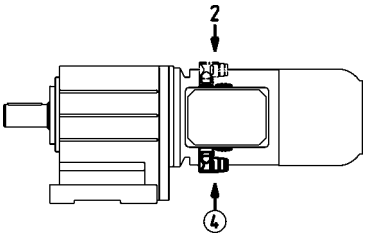

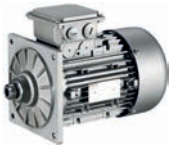

ICN connector

Blower connection

The blower is also optionally available with an ICN connector fixed to the terminal box of the blower for exceptionally fast commissioning. The connectors are fitted with a bayonet fixing, which is also compatible with conventional union nuts. Existing counter plugs can therefore continue to be used without difficulty.

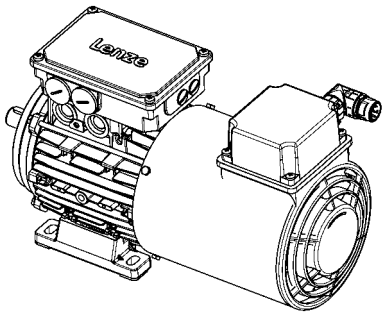

► Blower 1-ph

Pin assignment			
Contact	Designation	Meaning	
PE	PE	PE conductor	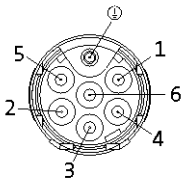
1	U1	Fan	
2	U2		
3		Not assigned	
4			
5			
6			

► Blower 3-ph

Pin assignment			
Contact	Designation	Meaning	
PE	PE	PE conductor	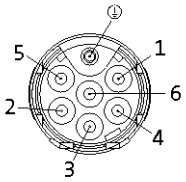
1	U	Phase U power	
2		Not assigned	
3	V	Phase V power	
4		Not assigned	
5			
6	W	Phase W power	

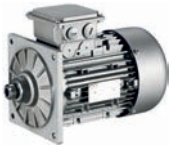

ICN connector

Dimensions of blower

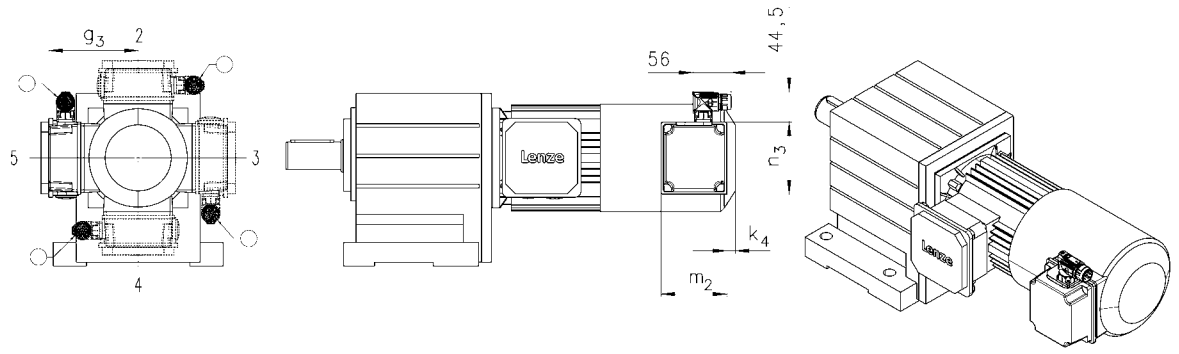

Size				
Motor				
	k_4	g_3	m_2	n_3
	[mm]	[mm]	[mm]	[mm]
063	12	115	95	105
071		122		
080	13	132	96	106
090	22	141	95	105
100		150		
112		162		
132	32	182		
160	31	209	96	106
180				
225				

► In addition, the cover of the blower terminal box (including connectors) can be rotated progressively through 90° if necessary.

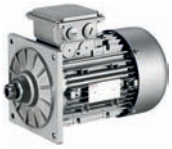

M12 connector

IG128-24V-H incremental encoder connection

As a standard this incremental encoder is equipped with a connection cable of about 0.5 m length and with a common industry standard M12 connector at its end.

Pin assignment			
Contact	Designation	Meaning	
1	$+U_B$	Supply +	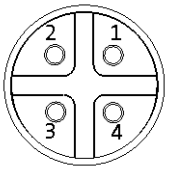
2	B	Track B	
3	GND	Mass	
4	A	Track A	

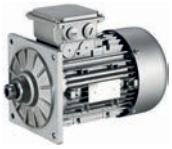

HAN connector

10E

In the case of the rectangular HAN-10E connectors, all six ends of the three winding phases are taken out to the power contacts. The motor circuit is therefore determined in the mating connector.

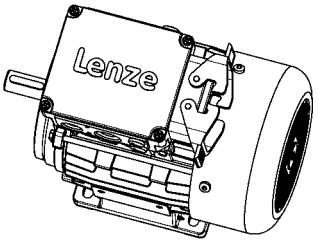

Pin assignment		
Contact	Meaning	
1	Terminal board: U1	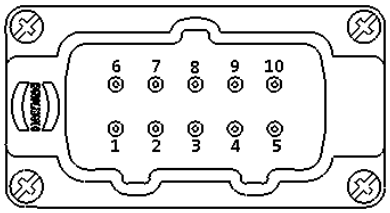
2	Terminal board: V1	
3	Terminal board: W1	
4	Brake +/AC	
5	Brake -/AC	
6	Terminal board: W2	
7	Terminal board: U2	
8	Terminal board: V2	
9	Thermal sensor: +KTY/PTC/TKO	
10	Thermal sensor: KTY/PTC/TKO	



HAN connector

Modular

The connector is available with two different power modules (16 A or 40 A), depending on the rated motor current. The motor connection is determined in the terminal box and must be checked before commissioning.

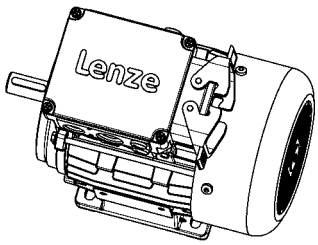

► HAN modular 16 A

Pin assignment			
Module	Contact	Meaning	
B		Dummy module	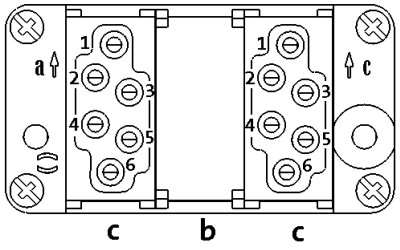
C	1	Thermal sensor: +KTY/PTC/TKO	
	2	Brake +/AC	
	3	Brake -/AC	
	4	Rectifier: Switching contact	
	5		
	6	Thermal sensor: KTY/PTC/TKO	

► HAN modular 40 A

Pin assignment			
Module	Contact	Meaning	
A	1	Terminal board: U1	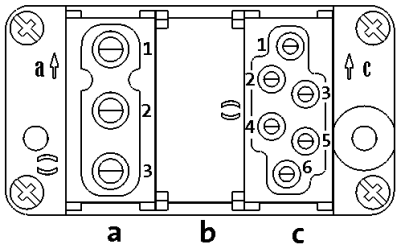
	2	Terminal board: V1	
	3	Terminal board: W1	
B		Dummy module	
C	1	Thermal sensor: +KTY/PTC/TKO	
	2	Brake +/AC	
	3	Brake -/AC	
	4	Rectifier: Switching contact	
	5		
	6	Thermal sensor: KTY/PTC/TKO	

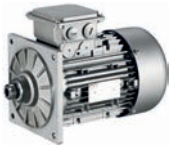

HAN connector

Motor type	M□□MAXX M□□MABR	M□□MAZE M□□MABZ
Motor frame size		
	Terminal box with HAN connector	
063-32 063-42	HAN-10E HAN modular	
071-32 071-42	HAN-10E HAN modular	HAN-10E HAN modular
080-32 080-42	HAN-10E HAN modular	HAN-10E HAN modular
090-32	HAN-10E HAN modular	HAN-10E HAN modular
100-12 100-32	HAN-10E HAN modular	HAN-10E HAN modular
112-22		
132-12 132-22 132-32	HAN modular	HAN modular

Motor terminal box with HAN connectors - built-on accessories assignment: 4-pole / 6-pole motors



HAN connector

Dimensions

- For motors with connectors, the connector position can be selected in accordance with the terminal box position.
- Unless the connector position is specified, it will be supplied in position 1.

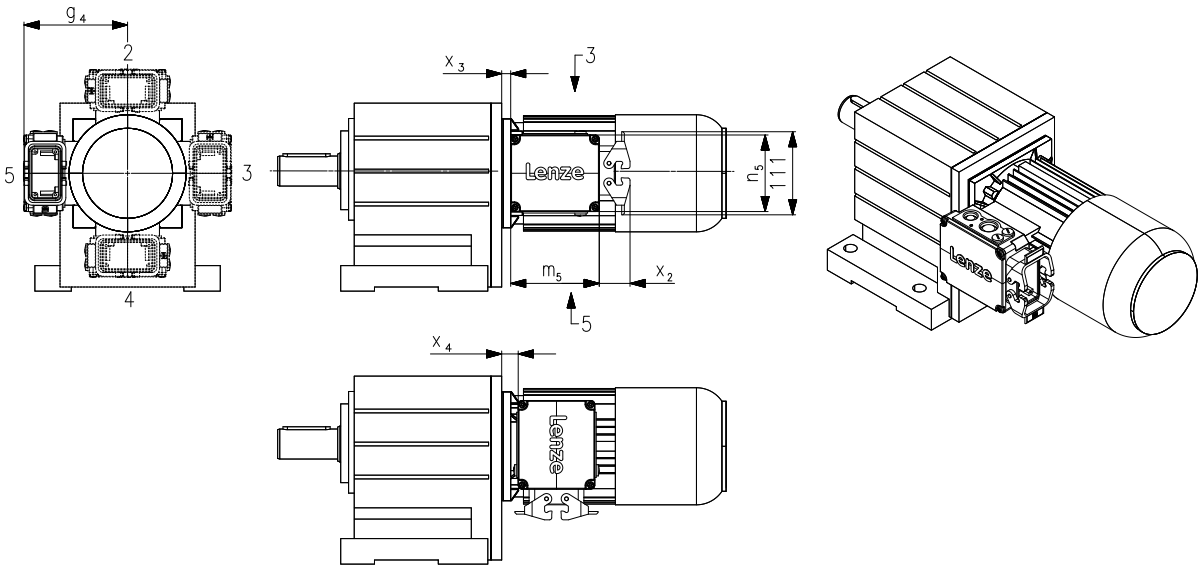

Size			
Motor			
	g_4	x_3	x_4
	[mm]	[mm]	[mm]
063	120	5.00	6.00
071	129	7.00	8.00
080	138	11.0	19.0
090	143	15.0	23.0
100	154	16.0	24.0
112	164	13.5	21.5
132	233	34.5	4.50
160	248	39.0	9.00

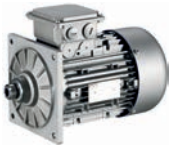

HAN connector

Position of connector

Connector in position 2

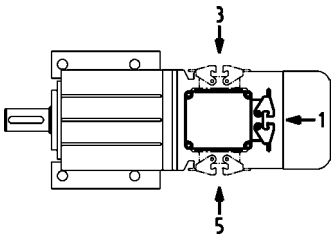

Connector in position 3

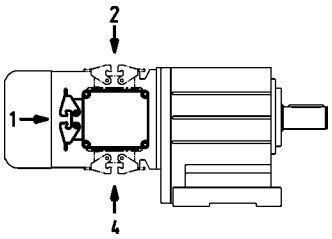

Connector in position 4

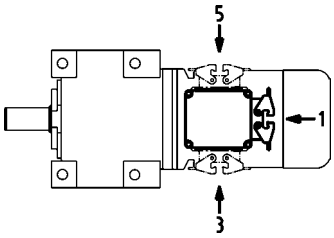

Connector in position 5

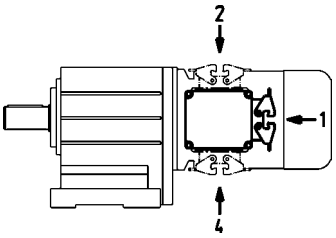



2nd shaft end

Dimensions, self-ventilated (4/6-pole)

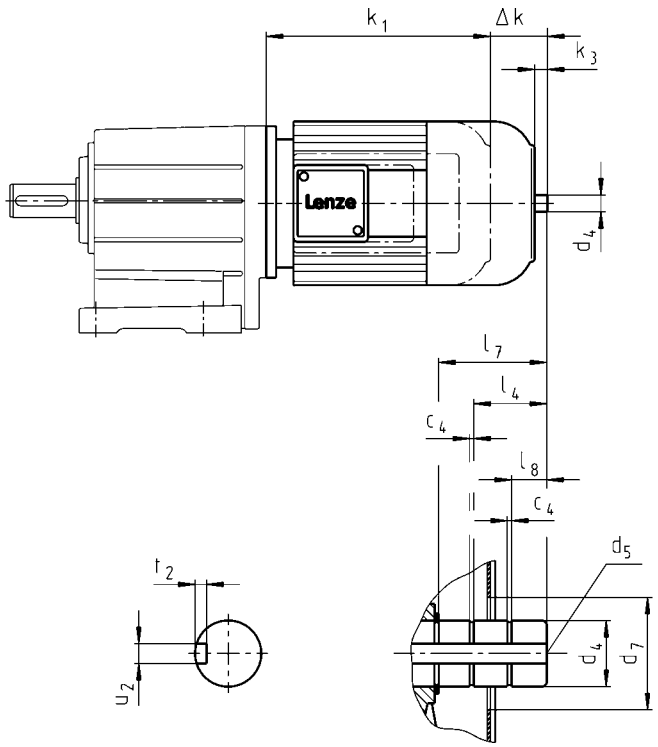

Motor type	
Built-on accessories	M□□MAZE M□□MABZ

Motor frame size												
	Δ k	k_3	c_4	d_4	d_4	d_5	d_7	l_4	l_7	l_8	u_2	t_2
				h6	j6							
	[mm]	[mm]	[mm]	[mm]	[mm]	[mm]	[mm]	[mm]	[mm]	[mm]	[mm]	[mm]
071-32 071-42	47	11.0	1.10	14.0		M5	34.0		19.0	3.00	5.00	3.00
080-32 080-42	68	9.00	1.10	14.0		M5	34.0		19.0	4.50	5.00	3.00
090-32	57	9.00	1.10	14.0		M5	34.0		19.0	5.00	5.00	3.00
100-12 100-32	71	18.5	1.30		20.0	M6	34.0	17.0	32.5	10.5	6.00	3.50
112-22	84	16.0	1.30		20.0	M6	34.0	17.0	28.5	7.00	6.00	3.50
132-12 132-22 132-32	101	24.5	1.60		30.0	M10	46.0	24.5	42.0	8.50	8.00	4.00

[1] During operation, appropriate measures must be taken to make fan cover opening safe.



Protection cover

Dimensions, self-ventilated (4/6-pole)

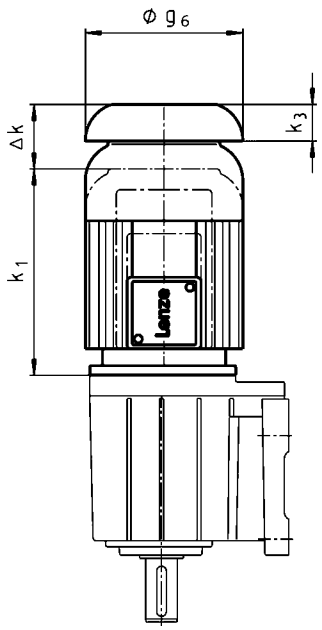

	Motor type					
	M□□MAXX	M□□MABR	M□□MABS M□□MABI M□□MABA	M□□MARS M□□MAIG M□□MAAG		

Motor frame size						
	Δ k	Δ k	Δ k	Δ k	k_3	g_6
	[mm]	[mm]	[mm]	[mm]	[mm]	[mm]
063-32 063-42	26	66	129	82	11.0	123
071-32 071-42	26	78	122	78	12.0	138
080-32 080-42	26	99	137	127	16.0	156
090-32	26	94	131	113	15.0	176
100-12 100-32	31	107	132	112	17.0	194
112-22	31	121	151	111	18.0	218
132-12 132-22 132-32	31	141	156	134	20.0	257



Protection cover

Dimensions, forced ventilated (4/6-pole)

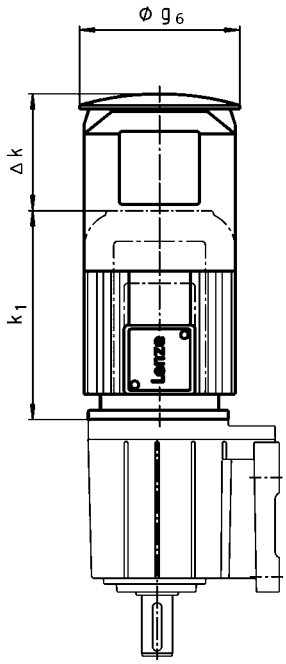

	Motor type			
	M□□MAXX	M□□MABR M□□MABS M□□MABI	M□□MARS M□□MAIG M□□MAAG	

Motor frame size				
	Δ k	Δ k	Δ k	g_6
	[mm]	[mm]	[mm]	[mm]
063-32 063-42	169	209	169	133
071-32 071-42	165	202	165	150
080-32 080-42	168	224	168	170
090-32	157	210	157	188
100-12 100-32	137	198	137	210
112-22	135	216	216	249
132-12 132-22 132-32	140	226	226	300

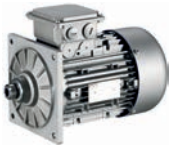

15593809

Lenze SE
Hans-Lenze-Straße 1
D-31855 Aerzen
Phone: +49 (0)5154 82-0
Telefax: +49 (0)5154 82 28 00

www.Lenze.com