L-force catalogue

Automation systems
Drive solutions

Controls
Inverter
Motors
Gearboxes
Engineering Tools

Motors: IE3 three-phase AC motors m200

Gearboxes: GST helical gearboxes, GFL shaft-mounted helical gearbox, GKS helical-bevel gearbox

Lenze
As easy as that.

Contents of the L-force catalogue

About Lenze		Lenze makes many things easy for you.	
		A matter of principle: the right products for every application.	
		L-force product portfolio	
Automation systems		Controller-based Automation	1.1
		Drive-based automation	1.2
Drive solutions		HighLine tasks	2.1
		StateLine tasks	2.2
		BaseLine tasks	2.3
Controls	Visualisation	Panel PC v800	3.1
		Monitor v200	3.2
	Cabinet Controllers	Controller 3200 C	3.3
		Controller c300	3.4
	Panel Controllers	Controller p500	3.5
		Controller p300	3.6
		I/O System 1000	3.7
Inverter	Decentralised	Inverter Drives 8400 protec	4.1
		Inverter Drives 8400 motec	4.2
	Cabinet	Servo Drives 9400 HighLine	4.3
		Inverter Drives 8400 TopLine	4.4
		Servo-Inverter i700	4.5
		Inverter Drives 8400 HighLine	4.6
		Inverter Drives 8400 StateLine	4.7
		Inverter Drives 8400 BaseLine	4.8
Motors	Servo motors	MCS synchronous servo motors	5.1
		MD□KS synchronous servo motors	5.2
		MQA asynchronous servo motors	5.3
		MCA asynchronous servo motors	5.4
	Three-phase AC motors	IE3 three-phase AC motors m500	5.5
		Inverter opt. three-phase AC motors MF	5.6
		IE2 MH three-phase AC motors	5.7
		IE1 MD three-phase AC motors	5.8
		Lenze Smart Motor m300	5.9
		IE3 three-phase AC motors m200	5.10
		IE1/2 three-phase AC motors Basic MD/MH	5.11
Gearboxes	Axial gearboxes	GST helical gearboxes	6.1
		GFL shaft-mounted helical gearbox	6.2
	Right-angle gearboxes	GKR bevel gearboxes	6.3
		GKS helical-bevel gearbox	6.4
		GSS helical-worm gearboxes	6.5
	Motor data	Assignment see above	6.6
Engineering Tools		Navigator	7.1
		Drive Solution Designer	7.2
		Drive Solution Catalogue	7.3
		Engineer	7.4
		PLC Designer	7.5
		VisiWinNET®	7.6
		EASY Starter	7.7

Selected portfolio

Additional portfolio

Lenze makes many things easy for you.

With our motivated and committed approach, we work together with you to create the best possible solution and set your ideas in motion - whether you are looking to optimise an existing machine or develop a new one. We always strive to make things easy and seek perfection therein. This is anchored in our thinking, in our services and in every detail of our products. It's as easy as that!

1

Developing ideas

Are you looking to build the best machine possible and already have some initial ideas? Then get these down on paper together with us, starting with small innovative details and stretching all the way to completely new machines. Working together, we will develop an intelligent and sustainable concept that is perfectly aligned with your specific requirements.

2

Drafting concepts

We see welcome challenges in your machine tasks, supporting you with our comprehensive expertise and providing valuable impetus for your innovations. We take a holistic view of the individual motion and control functions here and draw up consistent, end-to-end drive and automation solutions for you - keeping everything as easy as possible and as extensive as necessary.

3

Implementing solutions

Our easy formula for satisfied customers is to establish an active partnership with fast decision making processes and an individually tailored offer. We have been using this principle to meet the ever more specialised customer requirements in the field of machine engineering for many years.

4

Manufacturing machines

Functional diversity in perfect harmony: as one of the few full-range providers in the market, we can provide you with precisely those products that you actually need for any machine task – no more and no less. Our L-force product portfolio, a consistent platform for implementing drive and automation tasks, is invaluable in this regard.

5

Ensuring productivity

Productivity, reliability and new performance peaks on a daily basis – these are our key success factors for your machine. After delivery, we offer you cleverly devised service concepts to ensure continued safe operation. The primary focus here is on technical support, based on the excellent application expertise of our highly-skilled and knowledgeable after-sales team.

A matter of principle: the right products for every application.

Lenze's extensive L-force product portfolio follows a very simple principle. The functions of our finely scaled products are assigned to the three lines Base-Line, State-Line or High-Line.

But what does this mean for you? It allows you to quickly recognise which products represent the best solution for your own specific requirements.

Powerful products with a major impact:
- Easy handling
- High quality and durability
- Reliable technologies in tune with the latest developments

Lenze products undergo the most stringent testing in our own laboratory. This allows us to ensure that you will receive consistently high quality and a long service life. In addition to this, five logistics centres ensure that the Lenze products you select are available for quick delivery anywhere across the globe. It's as easy as that!

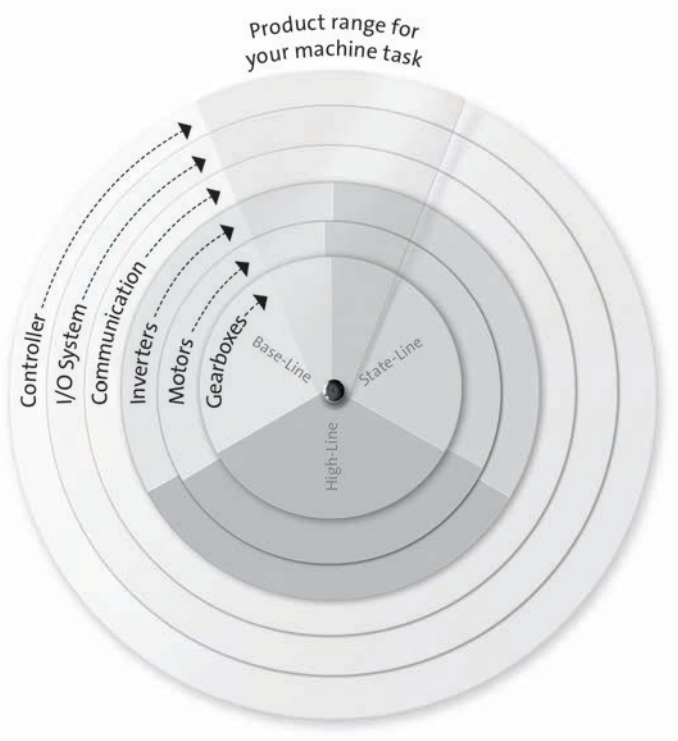

L-force product portfolio

Controls

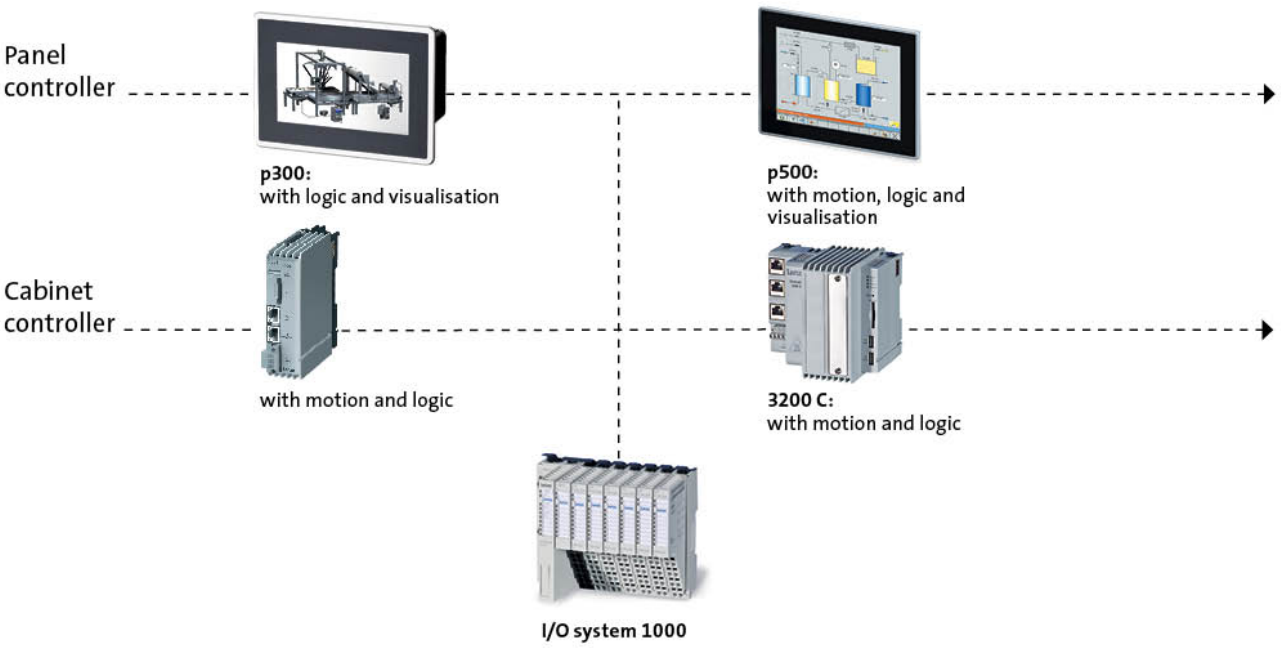

Engineering Tools

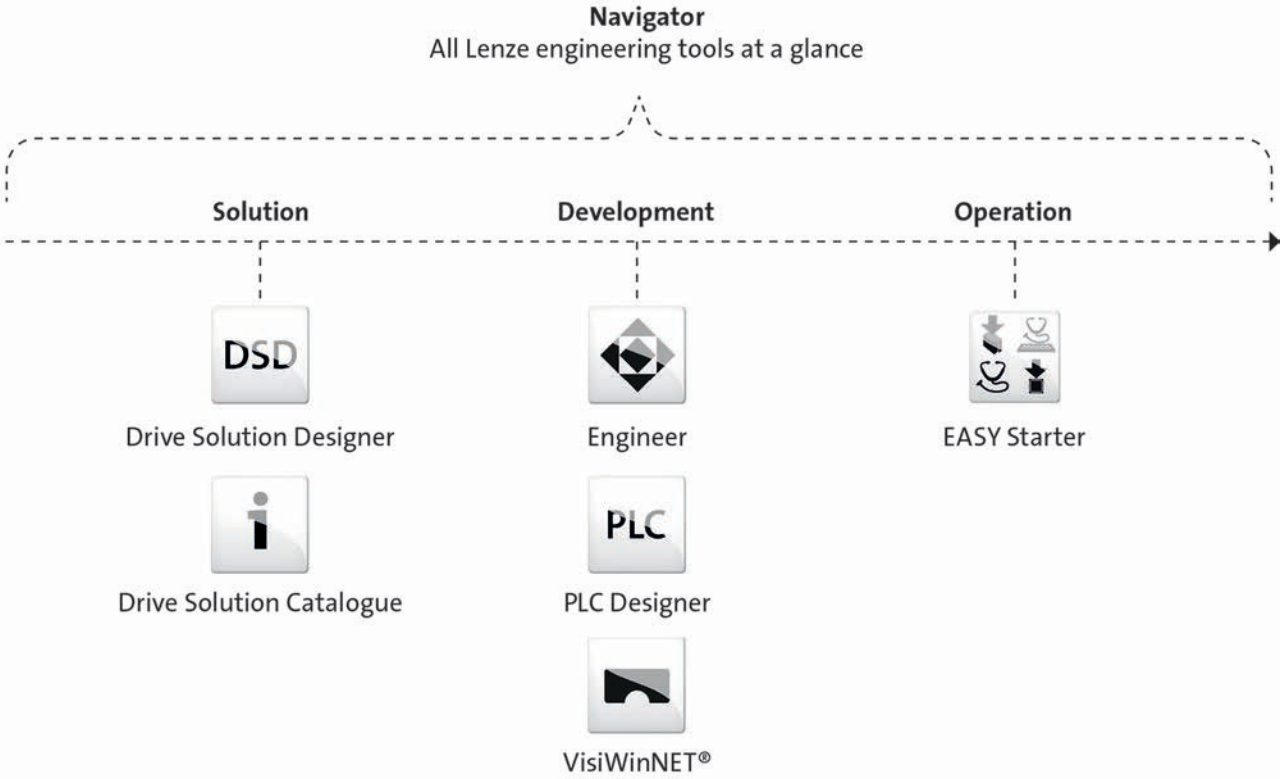

L-force product portfolio

Inverter

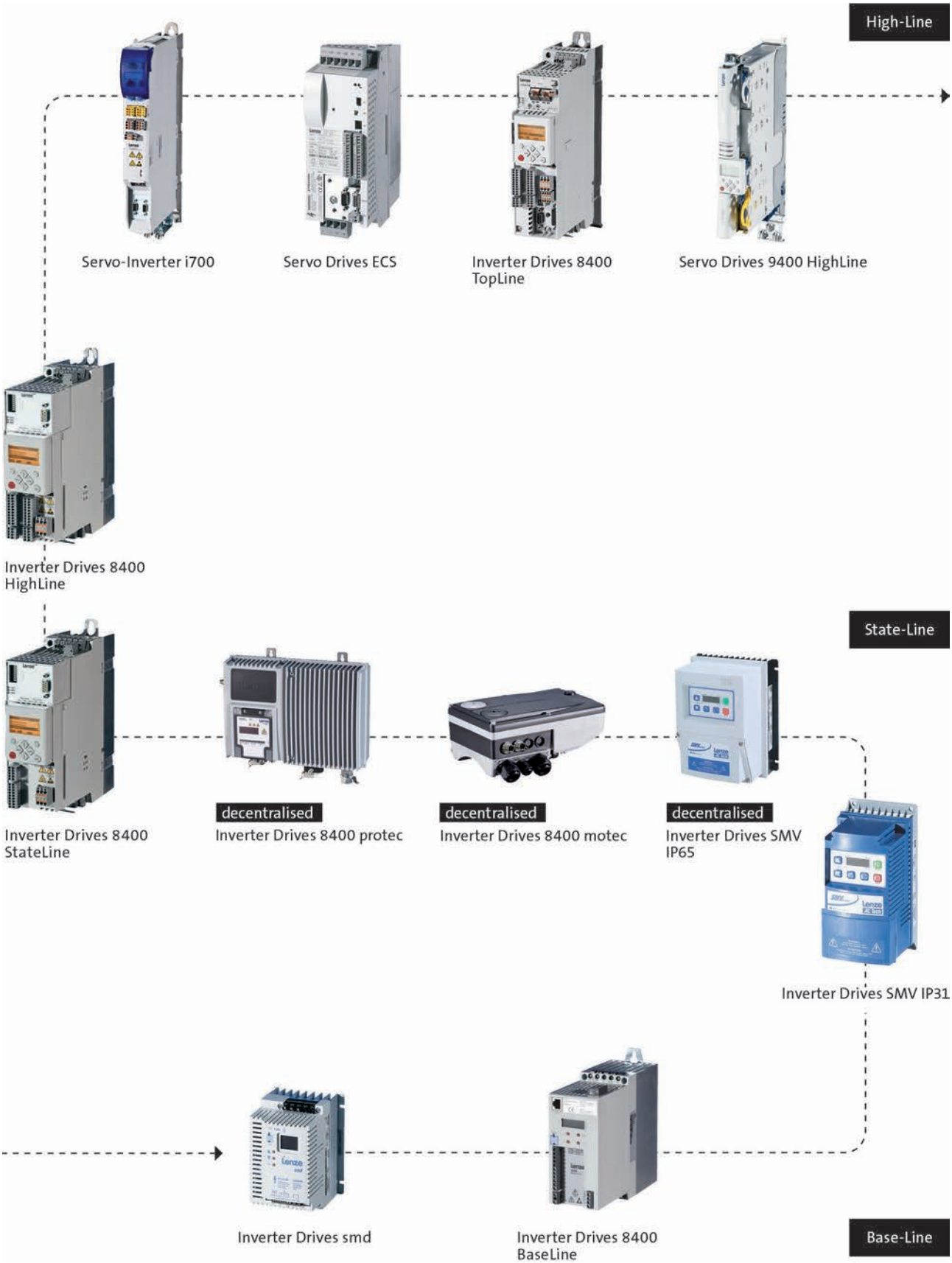

L-force product portfolio

Motors

High-Line

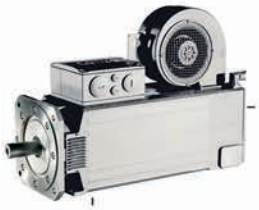

MQA asynchronous servo motors



SDSGS synchronous servo motors



MDXKS synchronous servo motors



Synchronous servo motors MCS



Asynchronous servo motors MCA



Asynchronous servo motors SDSGA

State-Line



MF three-phase AC motors



MH three-phase AC motors



MD three-phase AC motors



Basic MD/MH three-phase AC motors

Base-Line

L-force product portfolio

Gearboxes

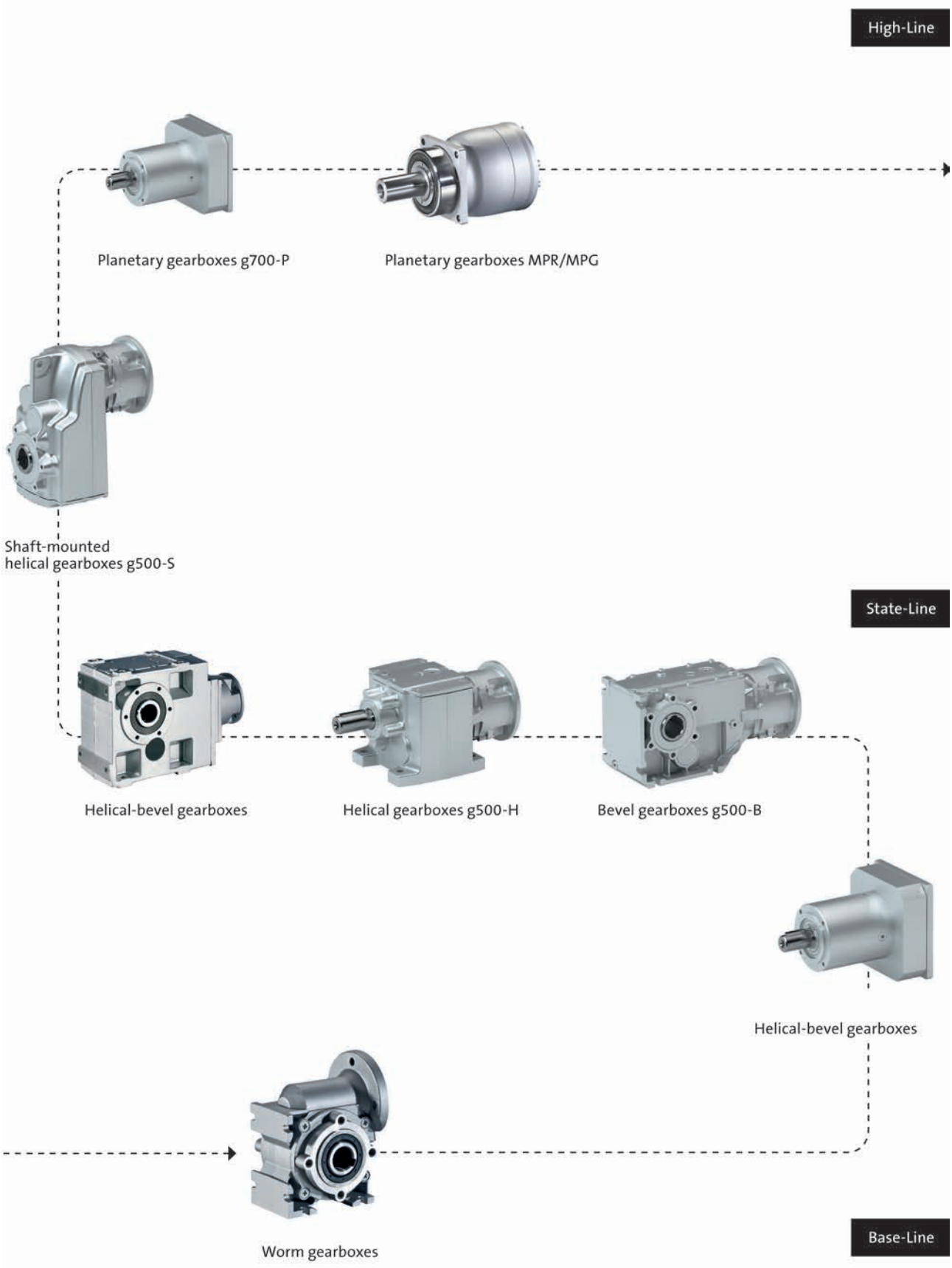

GST helical gear-boxes

Mains operation
5.5 ... 45 kW (efficiency class IE3)

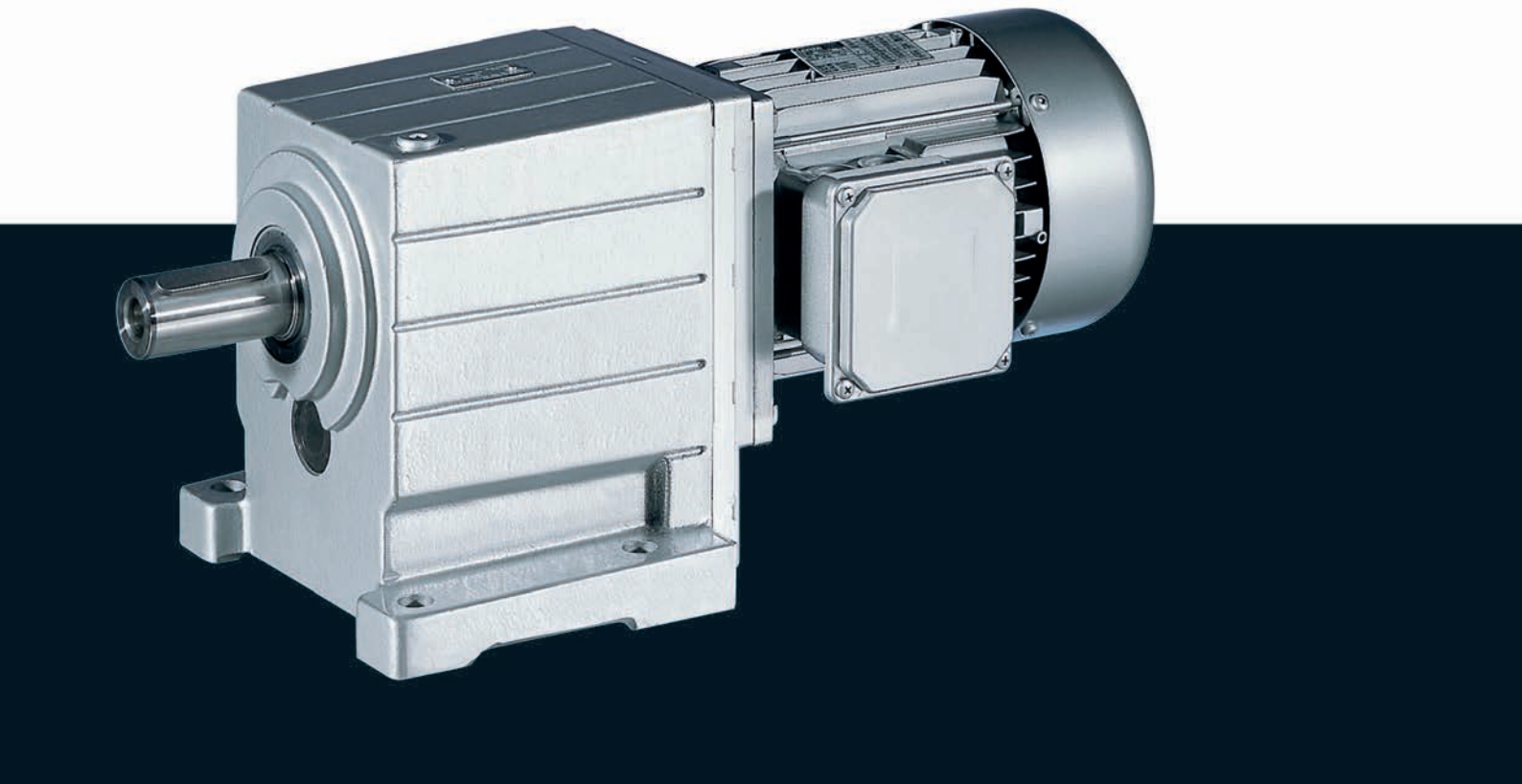

GST helical gearboxes



Contents

General information	List of abbreviations	6.1 - 4
	Product key	6.1 - 5
	Product information	6.1 - 7
	Functions and features	6.1 - 8
	Dimensioning	6.1 - 13
	Notes on ordering	6.1 - 17
	Ordering details checklist	6.1 - 18
Technical data	Permissible radial and axial forces at output	6.1 - 21
	Output backlash in angular minutes	6.1 - 25
	Moments of inertia	6.1 - 27
	Weights, 4-pole motors	6.1 - 34
	Additional weights for gearboxes	6.1 - 35
	Selection tables, 4-pole motors	6.1 - 36
	Dimensions, 4-pole motors	6.1 - 51
Accessories	GST□□-2/3M VAR	6.1 - 85
	GST□□-2/3M VAL	6.1 - 86
	Ventilations	6.1 - 87



List of abbreviations

$\eta_{c=1}$		Efficiency
c		Load capacity
f_N	[Hz]	Rated frequency
$F_{ax,max}$	[N]	Max. axial force
$F_{rad,max}$	[N]	Max. radial force
H_{max}	[m]	Site altitude
i		Ratio
J	[kgcm²]	Moment of inertia
m	[kg]	Mass
M_2	[Nm]	Output torque
n_2	[r/min]	Output speed
n_N	[r/min]	Rated speed
P_N	[kW]	Rated power
$S_{hü}$	[1/h]	Transition operating frequency
$T_{opr,max}$	[°C]	Max. ambient operating temperature
$T_{opr,min}$	[°C]	Min. ambient operating temperature
$U_{N,\Delta}$	[V]	Rated voltage
$U_{N,Y}$	[V]	Rated voltage

CE	Communauté Européenne
CSA	Canadian Standards Association
DIN	Deutsches Institut für Normung e.V.
EMC	Electromagnetic compatibility
EN	European standard
IEC	International Electrotechnical Commission
IM	International Mounting Code
IP	International Protection Code
NEMA	National Electrical Manufacturers Association
UL	Underwriters Laboratory Listed Product
UR	Underwriters Laboratory Recognized Product
VDE	Verband deutscher Elektrotechniker (Association of German Electrical Engineers)
CCC	China Compulsory Certificate
GOST	Certificate for Russian Federation
cURus	Combined certification marks of UL for the USA and Canada
UkrSEPRO	Certificate for Ukraine



Product key

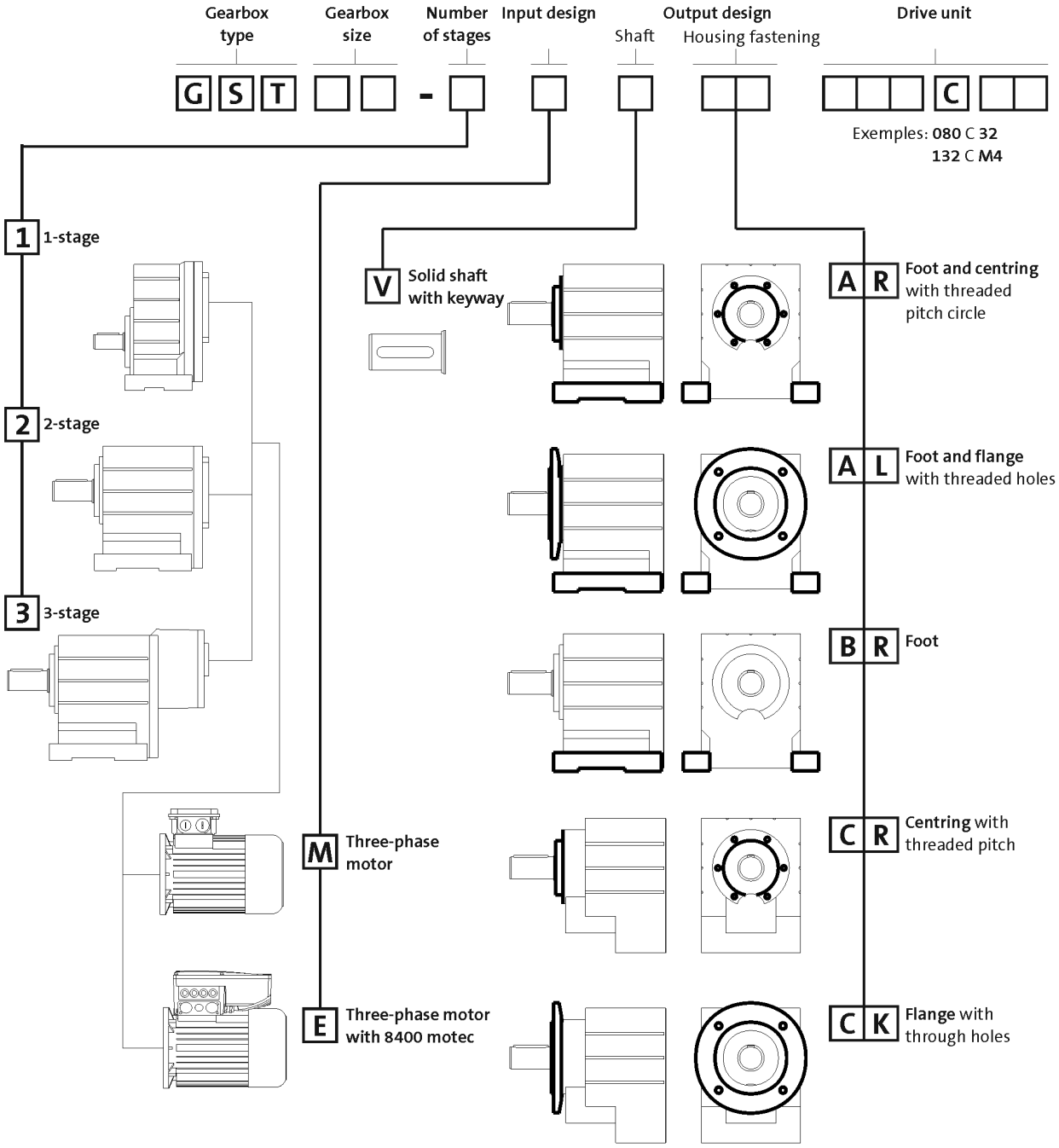

	Output design		
	V	K	L
	d x l [mm]	Øa2 [mm]	Øa2 [mm]
GST03-2	14x28	120/140/160	
	20x40	120/140/160	
GST04-1	16x32	120/140/160	
GST04-2	20x40	120/140/160	120/140
GST05-1	20x40	120/140/160/200	
GST05-2/3	25x50	120/140/160/200	120/140/160
GST06-1	25x50	160/200	

	Output design		
	V	K	L
	d x l [mm]	Øa2 [mm]	Øa2 [mm]
GST06-2/3	30x60	160/200	160/200
GST07-1	30x60	200/250	
GST07-2/3	40x80	200/250	200/250
GST09-1	40x80	250/300	
GST09-2/3	50x100	250/300	250/300
GST11-2/3	60x120	300/350	300/350
GST14-2/3	80x160	350/400	350/400



Product key

Mounting position (A to F) and position of system blocks (1 to 6)

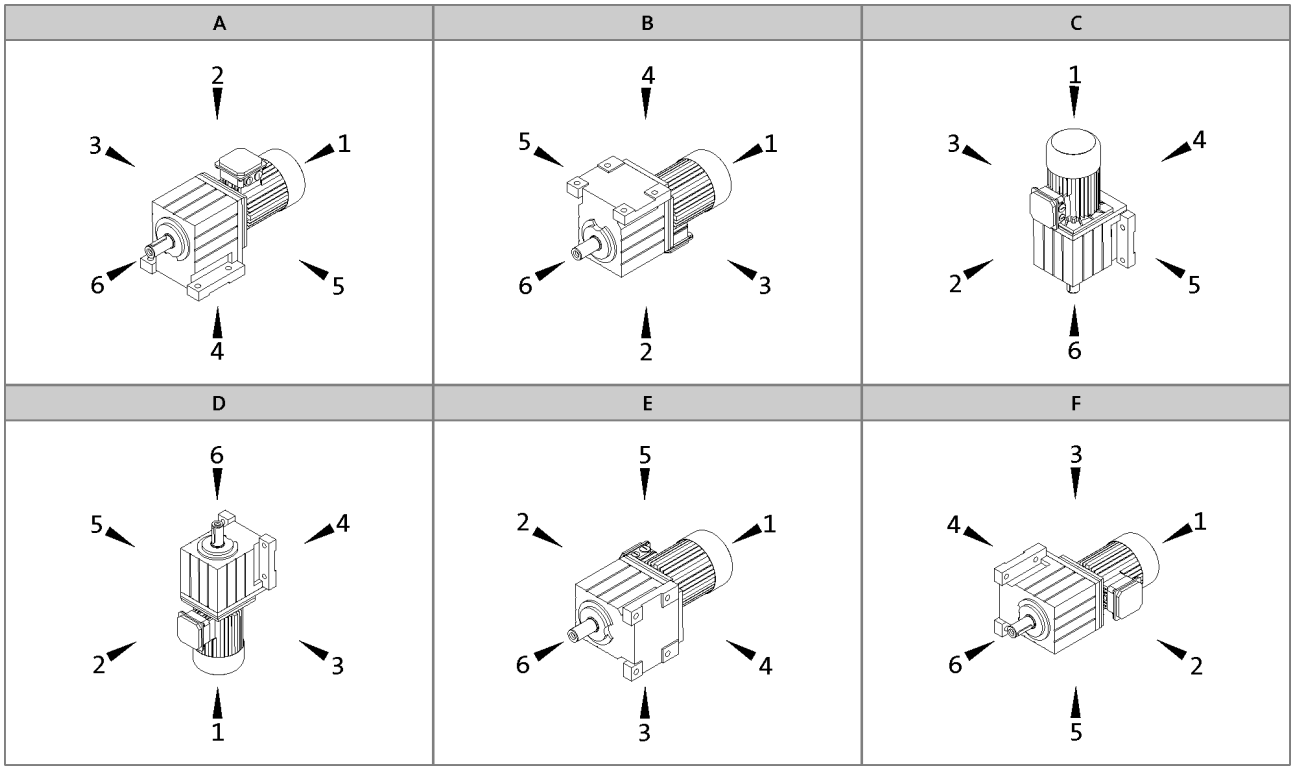

Terminal box / motec: 2, 3, 4, 5

Gearbox designs

Basic versions	
Motor efficiency	Standard efficiency Increased efficiency (IE2) Premium efficiency (IE3)
Surface and corrosion protection	No OKS (unpainted, aluminium housing) for GST03 OKS-G (primer: grey) OKS-S (paint: RAL 7012)
Lubricant	CLP 460 (mineral)
Ventilation	Oil control plugs for GST05 to 14 Breather elements for GST06 ... 14

Options	
Surface and corrosion protection	OKS-G (primer: grey) for GST03-2 OKS-S (special paint according to RAL) OKS-M (special paint according to RAL) OKS-L (special paint according to RAL)
Lubricant	CLP HC 320 (synthetic) CLP HC 220 USDA H1 (synthetic)
Shaft sealing rings	Driven shaft: Viton
Bearings	Driven shaft: reinforced for GST04 to 09-2/3
Ventilation	Breather elements for GST05 Compensation reservoir for GST09 to 14-2 in mounting position C
Nameplate	Metal nameplate (supplied loose) Adhesive nameplate (supplied loose)



Product information

Lenze provides a geared motor construction kit, which covers a wide range of requirements. Numerous drive-side and output-side options enable precise adaptation of the drive to the specific application. This is the basis for versatile applications and functional scalability of our gearboxes and geared motors.
The modular concept and high power density make extremely compact sizes possible. Optimised teeth profiles and ground gears ensure low-noise operation and low backlash. The gearboxes are of compact and hence space-saving construction.

Robust design with high efficiency

Together with three-phase AC motors, our helical gearboxes form a compact and powerful drive unit. They are rugged in design and feature high permissible radial forces, closely stepped speed reduction ratios and minimum backlash. The gearboxes are available as 1 and 2 and 3-stage versions with a torque of up to 5,920 Nm and a ratio of up to i= 435.

Types

- 1-, 2- and 3-stage gearboxes
- Solid shaft with keyway
- Foot or flange mounting
- With m200 three-phase AC motors (efficiency classes IE3) in the power range 5.5 ... 45 kW

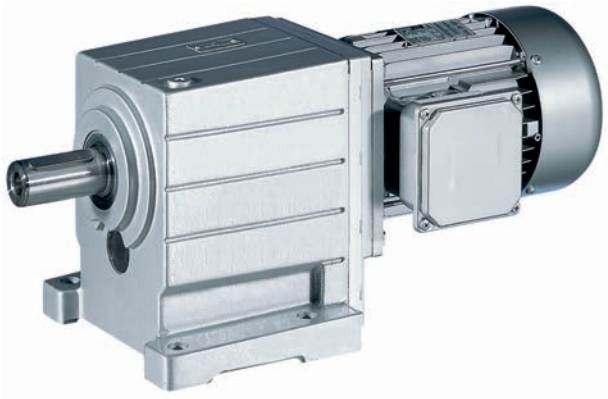



Functions and features

Gearbox type	GST
Housing	
Design	Cuboid
Material	Aluminium / cast iron
Solid shaft	
Design	with keyway to DIN 6885
Tolerance	k6 (d ≤ 50 mm) m6 (d > 50 mm)
Material	Tempered steel C45 or 42CrMo4
Hollow shaft	
Design	
Tolerance	
Material	
Toothed parts	
Design	Ground tooth flanks Optimised tooth flank geometry
Material	Case-hardened steel
Shaft-hub joint	
	1st stage/prestage/helical (bevel) gearbox: Friction-type connection Output stage (= 2nd, 3rd or 4th stage): Friction-type or positive-fit connection
Shaft sealing rings	
Design	With dust lip
Material	NB / FP
Bearing	
Design	Ball bearing / tapered-roller bearing depending on size and design
Lubricants	
Standard	DIN 51502
Quantities	corresponding to mounting position (see operating instructions)
Mechanical efficiency	
1-stage gearboxes [$\eta_{c=1}$]	0.98
2-stage gearboxes [$\eta_{c=1}$]	0.97
3-stage gearboxes [$\eta_{c=1}$]	0.95
4-stage gearboxes [$\eta_{c=1}$]	
Notes	



Functions and features

Lubricants

Lenze gearboxes and geared motors are ready for operation on delivery and are filled with lubricants specific to both the drive and the design. The mounting position and design specified in the order are key factors in choosing the volume of lubricant.

The lubricants listed in the lubricant table are approved for use in Lenze drives.

Lubricant table

Mode	CLP 460	CLP HC 320	CLP HC 220 USDA H1
Ambient temperature [°C]	0 ... +40	-25 ... +50	-20 ... +40
Specification	Mineral based oil with additives	Synthetic-based oil (synthetic hydrocarbon / poly-alpha-olefin oil)	
Note			For food processing industry
Changing interval	16000 operating hours not later than after three years (oil temperature 70 to 80 °C)	25000 operating hours not later than after three years (oil temperature 70 to 80 °C)	16000 operating hours not later than after three years (oil temperature 70 to 80 °C)
Fuchs	Fuchs Renolin CLP 460	Fuchs Renolin Unisyn CLP 320	bremer & leguil Cassida Fluid GL 220
Klüber	Klüberoil GEM1-460 N	Klübersynth GEM4-320 N	Klüberoil 4 UH1-220 N
Shell	Shell Omala S2 G 460	Shell Omala S4 GX HD 320	

► Please contact your Lenze sales office if you are operating at ambient temperatures in areas up to< -20 °C bzw. > or up to +40°C.



Functions and features

Surface and corrosion protection

For optimum protection of geared motors against ambient conditions, the surface and corrosion protection system (OKS) offers tailor-made solutions.

Various surface coatings combined with other protective measures ensure that the geared motors operate reliably even at high air humidity, in outdoor installations or in the presence of atmospheric impurities. Any colour from the RAL Classic collection can be chosen for the top coat. The geared motors are also available unpainted (no surface and corrosion protection).

Surface and corrosion protection system	Applications	Measures
	Catalogue text	Catalogue text
OKS-G (primed)	• Dependent on subsequent top coat applied	• 2K PUR priming coat (grey) • Zinc-coated screws • Rust-free breather elements Optional measures • Stainless steel nameplate
OKS-S (small)	• Standard applications • Internal installation in heated buildings • Air humidity up to 90%	• Surface coating as per corrosivity category C1 (in line with EN 12944-2) • Zinc-coated screws • Rust-free breather elements Optional measures • Stainless steel nameplate
OKS-M (medium)	• Internal installation in non-heated buildings • Covered, protected external installation • Air humidity up to 95%	• Surface coating as per corrosivity category C2 (in line with EN 12944-2) • Zinc-coated screws • Rust-free breather elements Optional measures • Stainless steel shaft • Stainless steel nameplate • Rust-free shrink disc (on request)
OKS-L (high)	• External installation • Air humidity above 95% • Chemical industry plants • Food industry	• Surface coating as per corrosivity category C3 (in line with EN 12944-2) • Blower cover and B end shield additionally primed • Cable glands with gaskets • Corrosion-resistant brake with cover ring, stainless friction plate, and chrome-plated armature plate (on request) • All screws/screw plugs zinc-coated • Stainless breather elements • Threaded holes that are not used are closed by means of plastic plugs Optional measures • Sealed recesses on motor (on request) • Stainless steel shaft • Stainless steel nameplate • Rust-free shrink disc (on request) • Additional priming coat on cast iron fan • Oil expansion tank and torque plates painted separately and supplied loose



Functions and features

Structure of surface coating

Surface and corrosion protection system	Corrosivity category	Surface coating	Colour
	DIN EN ISO 12944-2	Structure	
Without OKS (uncoated)		Dipping primed gearbox	
OKS-G (primed)		Dipping primed gearbox 2K PUR priming coat	
OKS-S (small)	Comparable to C1	Dipping primed gearbox 2K-PUR top coat	Standard: RAL 7012 Optional: RAL Classic
OKS-M (medium)	Comparable to C2	Dipping primed gearbox 2K PUR priming coat 2K-PUR top coat	Standard: RAL 7012 Optional: RAL Classic
OKS-L (high)	Comparable to C3	Dipping primed gearbox 2K PUR priming coat 2K-PUR top coat	Standard: RAL 7012 Optional: RAL Classic

► The gearboxes GST 03 have an aluminium housing, therefore a dipping primer is dispensed with in the case of these gearboxes.



Functions and features

Ventilation

Non-ventilated gearboxes
No ventilation is required for gearboxes GST03 to 04.

Gearboxes that may optionally be equipped with ventilation
Special measures are not usually required when using the GST05 gearbox. In borderline cases, e.g. at input speeds > 2000 r/min, we recommend the use of breather elements, which we can supply if required.

Ventilated gearboxes
Gearboxes GST06 to 14 are supplied with breather elements as standard.

Special measures for mounting position C (motor on top)
We recommend that an oil compensation reservoir is always used with gearbox sizes G□□09 to 14 in this mounting position. This reservoir can be purchased as an option. For illustrations and measures, please refer to the Accessories chapter.

This is not required at higher ratios or low input speeds. Please contact Lenze for confirmation in this case.



Dimensioning

General information about the data provided in this catalogue

The powers, torques and speeds specified in this catalogue are rounded values and are valid under the following conditions:

- Operating time/day = 8 h (100% OT)
- Duty class I for up to 10 switching operations/h
- Mounting positions and designs in this catalogue
- Standard lubricant
- T_{amb} = 20 °C for gearboxes,
  T_{amb} = 40 °C for motors (in accordance with EN 60034)
- Site altitude < = 1000 m amsl
- The selection tables provide the permissible mechanical powers and torques. For notes on the thermal power limit, see chapter drive dimensioning.
- The rated power specified for motors and geared motors applies to operating mode S1 (in accordance with EN 60034).

Under different operating conditions, the values obtained may vary from those listed here.
In the case of extreme operating conditions, please consult your Lenze sales office.



Dimensioning

Thermal power limit

The thermal power limit, defined by the heat balance, limits the permissible gearbox continuous power. It may be less than the mechanical power ratings listed in the selection tables.

The thermal power limit is affected by:
- the churning losses in the lubricant. These are determined by the mounting position and the circumferential speed of the gears;
- the load and the speed
- the ambient conditions: temperature, air circulation, input or dissipation via shafts and the foundation

Please consult your Lenze sales office
- if the following input speeds n_1 are exceeded on a continuous basis (continuous is defined as more than 8 h/day):

Motor frame size	Mounting position A, B, E, F	Mounting position C, D
063 ... 100	3000 r/min	3000 r/min
112 ... 132	3000 r/min	1500 r/min
160 ... 225	2000 r/min	1500 r/min

- if the following input speeds n_1 are exceeded:

Motor frame size	Mounting position A, B, E, F	Mounting position C, D
063 ... 100	4000 r/min	3000 r/min
112 ... 132	4000 r/min	2000 r/min
160 ... 225	3000 r/min	1500 r/min

- or if you are using the following gearbox type, size and ratio combinations at an input speed of n_1 > 1500 r/min:

Gearbox type	Gearbox size	Ratio i
GST helical gearboxes	07, 09, 11, 14	≤ 10

Possible ways of extending the application area

- synthetic lubricant (option)
- shaft sealing rings made from FP material/Viton (option)
- reduction in lubricant quantity
- cooling of the geared motor by means of air convection on the machine/system



Dimensioning

Load capacity and application factor

Load capacity c of gearbox
Rated value for the load capacity of Lenze geared motors.
- c is the ratio of the permissible rated torque of the gearbox to the rated torque supplied by the drive component (e.g. the built-in Lenze motor).
- The value of c must always be greater than the value of the application factor k calculated for the application.

Requierement: c ≥ k

Application factor k (according to DIN 3990)
Takes into account the influence of temporally variable loads which are actually present during the anticipated operating time of gearboxes and geared motors.
k is determined by:
- the type of load
- the load intensity
- temporal influences

Duty class	Load type	Intensity	
I	Smooth operation, small or light jolts	$F_I \leq 1.25$	$F_I = \frac{\frac{J_L}{i^2} + J_M + J_B + J_Z}{J_M + J_B + J_Z}$
II	Uneven operation, average jolts	$1.25 < F_I \leq 4$	
III	Uneven operation, severe jolts and/or alternating load	$F_I > 4$	

J_L= moment of inertia of the load
i = gearbox ratio
J_M= moment of inertia of the motor
J_B= moment of inertia of the motor brake
J_Z= moment of inertia of additional built-on motor accessories

Application factor k

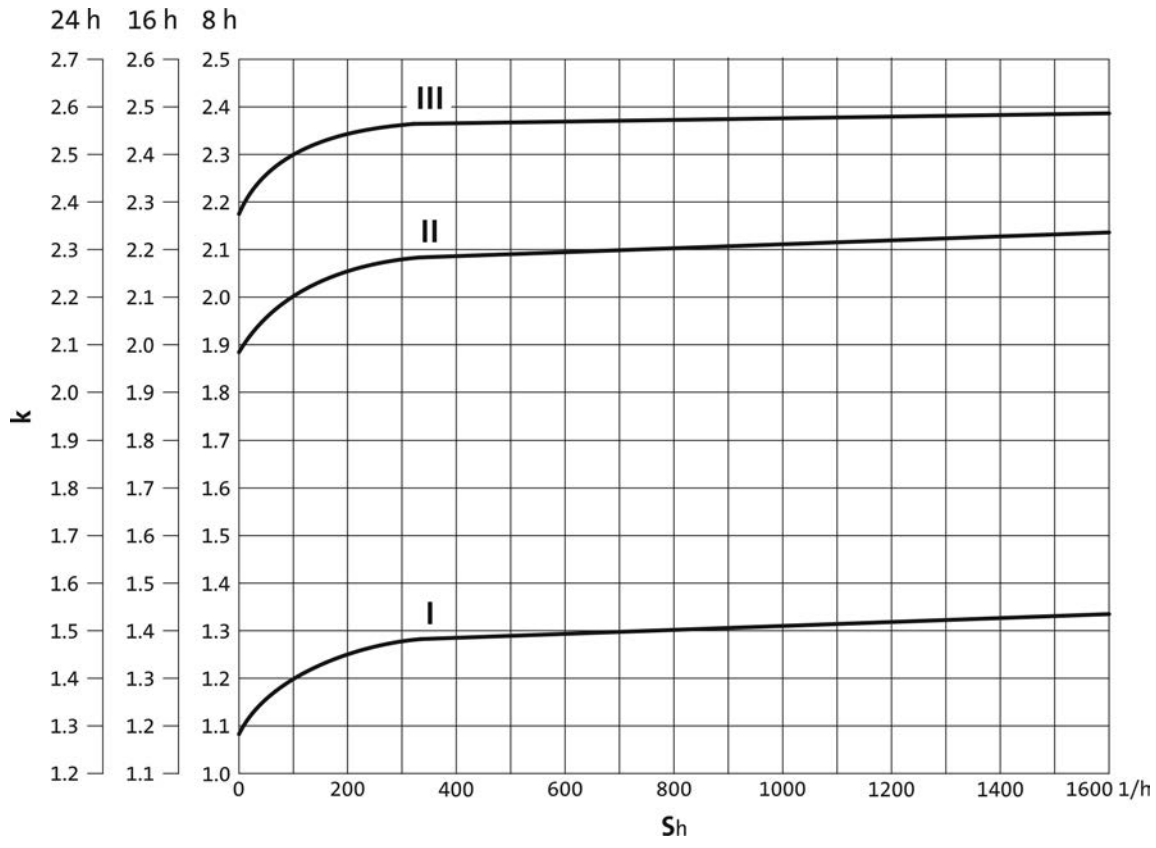

S_h= switching operations/hour



Dimensioning

Notes on the selection tables

The selection tables show the available combinations of gearbox type, number of stages, ratio and motor. They are used only to provide basic orientation.
The following legend indicates the structure of the selection tables.

Rated power Prated of the drive motor depending on the rated frequency

50 Hz: P_N = 5.5 kW

2-stufige Getriebe ← **Number of the gear stage of the gearbox**

Mains operation 400 V, 50 Hz			i	Product		
n_2 [r/min]	M_2 [Nm]	c		GST	m200	
97	527	2.5	15.156	GST09	-P132M4	67
95	536	1.2	15.400	GST07	-P132M4	61

Mains operation
Output speed **n2**
Output torque **M2**

Load capacity c of the gearbox
c is the ratio between the permissible rated torque of the gearbox and the rated torque of the three-phase AC motor (converted to the driven shaft).
c must be always higher than the service factor **k** determined for the application **k**.

Ratio i

Product Gearbox

Product Motor

Page number for dimensions

$$c = \frac{M_{2,zul}}{M_{1N} \cdot i \cdot \eta_{Getr}} > k$$

6.1

Motor voltages

The power values and torques indicated in the selection tables refer to the following motor voltages:
- 50 Hz : Δ 400 V



Notes on ordering

We want to be sure that you receive the correct products in good time.

To allow us to achieve this we need:
- your address and your company data
- our product key for the individual products in this catalogue
- your delivery date and delivery address

Ordering procedure
Please use the ordering information checklist to ensure that you provide all the ordering information required for the various products.

The ordering information checklist, the product key, the basic versions, options, mounting position and position of the system blocks will be found in the General – Product key section.

A list of Lenze's worldwide sales offices can be found on the Internet: www.Lenze.com.



Ordering details checklist

☐ **Offer**

Page __ of __

☐ **Order**

Customer No.

Job No.

Fax No. _____

Sender

Company

Made out by (name)

Street/P.O. Box

Department

P.O. Box, City

Telephone No.

Date Signature

Delivery address (if different)

Street/P.O. Box

Desired delivery date

P.O. Box, City

Dispatching notes

Invoice recipient (if different)

Street/P.O. Box

Postal code, City



Ordering details checklist

Customer No. ☐☐☐☐☐☐☐☐ **Job No.** ☐☐☐☐☐☐☐☐☐☐ Page __

Quantity ☐☐☐☐

Efficiency class ☐ High efficiency (IE3)

Rated frequency ☐ 50 Hz

Ratio i ☐☐☐☐

GST ☐☐ – ☐ 1 / 2 / 3 ☐ M / E ☐ V ☐ A / B / C ☐ R / K / L

Motor frame size ☐☐☐C☐☐

Solid shaft d = ☐ mm (only with GST03)

Flange a_2 = ☐ mm

Mounting position A ☐ B ☐ C ☐ D ☐ E ☐ F ☐

Position of system blocks Terminal box 2 ☐ 3 ☐ 4 ☐ 5 ☐

Surface and corrosion protection

GST03 ☐ Without OKS (unpainted)

GST04 ... 14 ☐ OKS-S colour: RAL 7012 ☐ OKS-G (primed)

Options

Special lubricants

☐ CLP HC 320 (synthetic)

☐ CLP HC 220 USDA H1 (for the food industry)

Surface and corrosion protection

☐ OKS-S (small)

☐ OKS-M (medium) RAL ☐☐☐☐

☐ OKS-L (high)

☐ OKS-G (primed) only with GST03

Output shaft bearing

☐ Reinforced bearing for GST04 ... 09-2

Shaft sealing rings

☐ Viton

Breathing

☐ Breather elements for GST05

☐ Compensation reservoir in mounting position for GST 09 ... 14-2



Ordering details checklist

Three-phase AC motors options

Customer No. ☐☐☐☐☐☐☐☐ **Job No.** ☐☐☐☐☐☐☐☐☐☐ Page __

Motor connection

Terminal box ☐

Cable entry in position 1 ☐ 2 ☐ 3 ☐ 4 ☐ 5 ☐

Spring-applied brake

Brake version ☐ Standard

Brake size ☐

Characteristic torque ☐ Nm

Rated voltage AC ☐ DC ☐ ☐ V

Rectifier Only in the case of AC supply voltage

☐ Half-wave rectifier ☐ Bridge rectifier

Brake options Manual release lever in position 2 ☐ 3 ☐ 4 ☐ 5 ☐

Motor protection

☐ TKO ☐ PTC

Further options

☐ 2nd nameplate (adhesive nameplate/metal nameplate)

6.1



Permissible radial and axial forces at output

Permissible radial force
$F_{rad,per} = \min(f_w \times f_\alpha \times F_{rad,max}\ ;\ f_w \times F_{rad,max}$ at $n_2 \leq 50$ r/min)

Permissible axial force
$F_{ax,per} = F_{ax,max}$ if $F_{rad} = 0$

If F_{rad} **and** $F_{ax} \neq 0$, please contact your Lenze sales office.

Application of forces

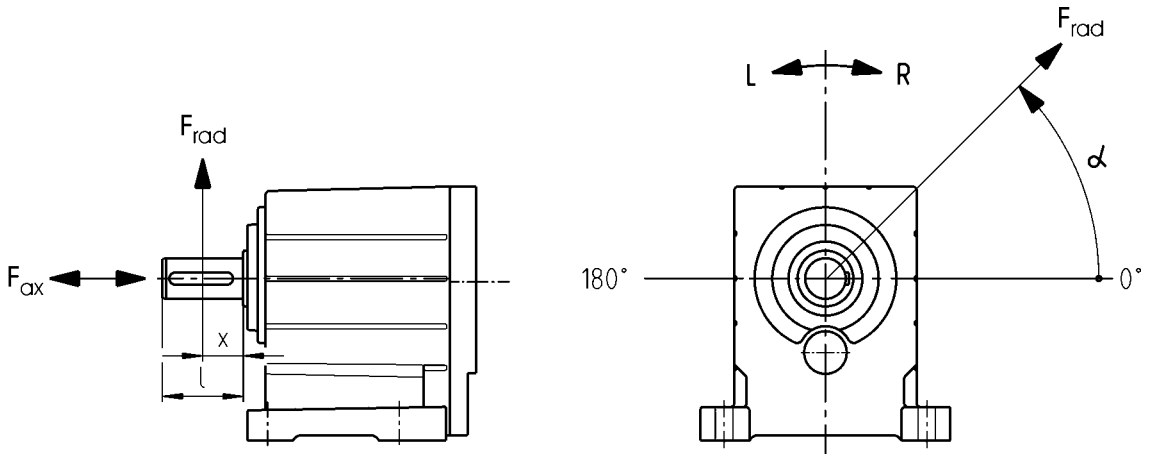

Effective direction factor f_α at output shaft

GST03-2

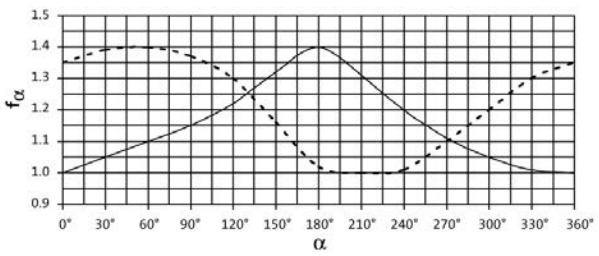

GST04 to 09-1

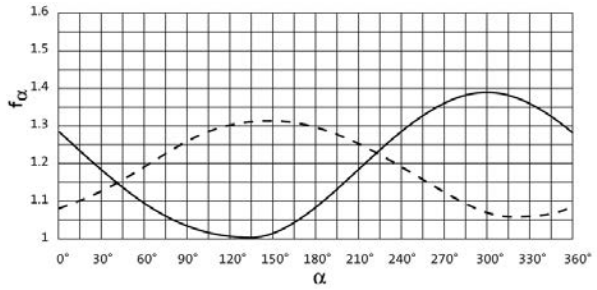

GST04 to 09-2, 3

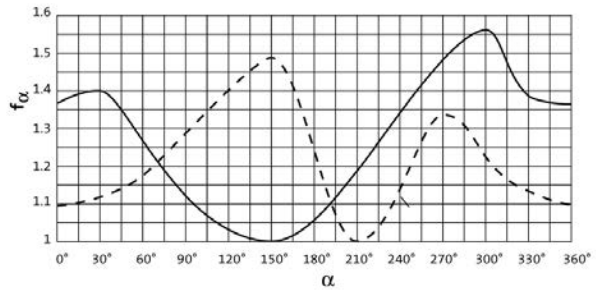

GST11 to 14-2, 3

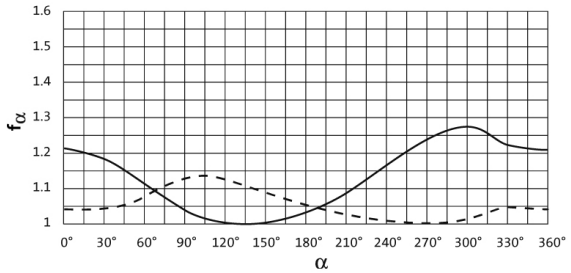

——— Direction of rotation R
— — — Direction of rotation L



Permissible radial and axial forces at output

Additional load factor f_w at output shaft

GST03-2	GST04 to 09-1, 2, 3
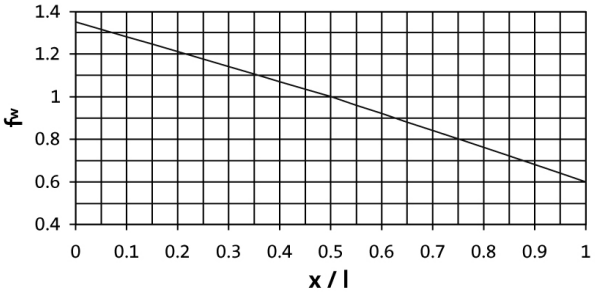	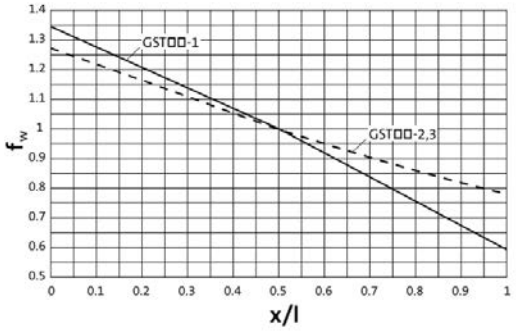

GST□□-1

Size	n_2 [r/min]								
Gearbox	2500	1600	1000	600	400	200	125	80	≤50

	Max. radial force, Solid shaft								
	$F_{rad,max}$	$F_{rad,max}$	$F_{rad,max}$	$F_{rad,max}$	$F_{rad,max}$	$F_{rad,max}$	$F_{rad,max}$	$F_{rad,max}$	$F_{rad,max}$
	[N]	[N]	[N]	[N]	[N]	[N]	[N]	[N]	[N]
GST04	100	180	440	600	850	1050	1050	1050	1050
GST05	100	250	550	750	1400	2000	2300	2300	2300
GST06	200	600	800	800	1100	2200	2900	3500	3500
GST07	700	1000	1200	1300	1900	3000	3900	4700	5300
GST09	1750	2200	2500	2500	3500	6200	7900	9000	9500

	Max. axial force, Solid shaft								
	$F_{ax,max}$	$F_{ax,max}$	$F_{ax,max}$	$F_{ax,max}$	$F_{ax,max}$	$F_{ax,max}$	$F_{ax,max}$	$F_{ax,max}$	$F_{ax,max}$
	[N]	[N]	[N]	[N]	[N]	[N]	[N]	[N]	[N]
GST04	600	800	1000	1300	1400	1400	1400	1400	1400
GST05	800	1100	1400	2000	2000	2000	2000	2000	2000
GST06	900	1200	1500	2000	2500	2500	2500	2500	2500
GST07	1200	1600	2000	2700	3300	3700	3700	3700	3700
GST09	2500	3400	4300	5700	6800	7000	7000	7000	7000

6.1

- Application of force F_{rad}: centre of shaft journal (x = l/2)
- $F_{ax,max}$ only valid with F_{rad} = 0



Permissible radial and axial forces at output

GST□□-2 / 3 with standard bearings

Size	n_2 [r/min]									
Gearbox	1000	630	400	250	160	100	63	40	25	≤16

	Max. radial force, Solid shaft									
	$F_{rad,max}$	$F_{rad,max}$	$F_{rad,max}$	$F_{rad,max}$	$F_{rad,max}$	$F_{rad,max}$	$F_{rad,max}$	$F_{rad,max}$	$F_{rad,max}$	$F_{rad,max}$
	[N]	[N]	[N]	[N]	[N]	[N]	[N]	[N]	[N]	[N]
GST03	100	300	630	710	800	920	1100	1400	1500	1500
GST04	730	950	1250	1450	1700	2100	2500	2650	2650	2650
GST05	1150	1500	1950	2200	2600	3000	3500	3800	3900	3900
GST06	140	750	2350	2600	3100	3600	4300	4350	4350	4350
GST07	140	2050	3400	3800	4500	5400	6400	7600	9100	9500
GST09	1500	1950	6800	7600	9400	11500	11500	11500	11500	11500
GST11	11500	14400	17000	19000	21000	21000	21000	21000	21000	21000
GST14	16600	20700	24000	27000	31000	36000	39000	40000	40000	40000

	Max. axial force, Solid shaft									
	$F_{ax,max}$	$F_{ax,max}$	$F_{ax,max}$	$F_{ax,max}$	$F_{ax,max}$	$F_{ax,max}$	$F_{ax,max}$	$F_{ax,max}$	$F_{ax,max}$	$F_{ax,max}$
	[N]	[N]	[N]	[N]	[N]	[N]	[N]	[N]	[N]	[N]
GST03	300	400	600	700	800	900	1000	1000	1000	1000
GST04	600	800	1100	1300	1650	2000	2000	2000	2000	2000
GST05	1200	1600	2000	2300	2650	3100	3600	3600	3600	3600
GST06	500	600	850	900	1250	1800	2600	3600	4800	4800
GST07	1100	1500	1900	2200	2900	3900	5300	7000	7000	7000
GST09	1300	1800	2300	2800	4000	5600	8100	11000	12000	12000
GST11	5700	7600	9500	10000	11000	14000	16000	16000	16000	16000
GST14	9000	12000	15000	16000	18000	20000	20000	20000	20000	20000

- Application of force F_{rad}: centre of shaft journal (x = l/2)
- $F_{ax,max}$ only valid with F_{rad} = 0



Permissible radial and axial forces at output

GST□□-2 / 3 with reinforced bearing

Size	n_2 [r/min]									
Gearbox	1000	630	400	250	160	100	63	40	25	≤16

	Max. radial force, Solid shaft (reinforced bearings))									
	$F_{rad,max}$	$F_{rad,max}$	$F_{rad,max}$	$F_{rad,max}$	$F_{rad,max}$	$F_{rad,max}$	$F_{rad,max}$	$F_{rad,max}$	$F_{rad,max}$	$F_{rad,max}$
	[N]	[N]	[N]	[N]	[N]	[N]	[N]	[N]	[N]	[N]
GST04	1900	2350	2850	3150	3550	3750	3750	3750	3750	3750
GST05	3350	3950	4900	5400	5400	5400	5400	5400	5400	5400
GST06	4250	5100	6300	7000	7700	7700	7700	7700	7700	7700
GST07	5650	6850	8500	9500	10500	12500	13000	13000	13000	13000
GST09	11300	14000	16500	17000	17000	17000	17000	17000	17000	17000

	Max. axial force, Solid shaft (reinforced bearings))									
	$F_{ax,max}$	$F_{ax,max}$	$F_{ax,max}$	$F_{ax,max}$	$F_{ax,max}$	$F_{ax,max}$	$F_{ax,max}$	$F_{ax,max}$	$F_{ax,max}$	$F_{ax,max}$
	[N]	[N]	[N]	[N]	[N]	[N]	[N]	[N]	[N]	[N]
GST04	1000	1300	1700	1900	2200	2500	2500	2500	2500	2500
GST05	2100	2800	3600	3900	4300	4500	4500	4500	4500	4500
GST06	2100	2800	3500	3600	4200	4900	5700	5700	5700	5700
GST07	3300	4400	5500	6100	7100	8300	9000	9000	9000	9000
GST09	4800	6400	8000	9000	10500	12500	14000	14000	14000	14000

- Application of force F_{rad}: centre of shaft journal (x = l/2)
- $F_{ax,max}$ only valid with F_{rad} = 0



Output backlash in angular minutes

► Backlash ϕ depending on ratio i

GST04 to 09-1

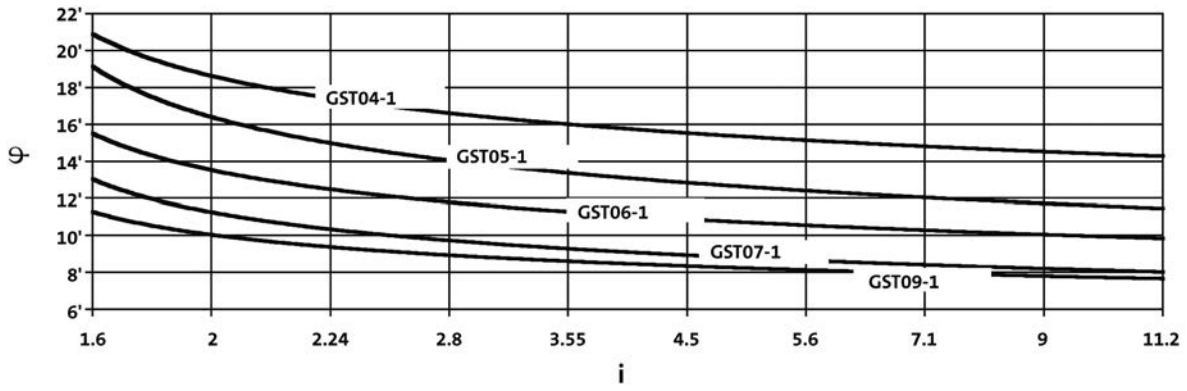

GST03-2

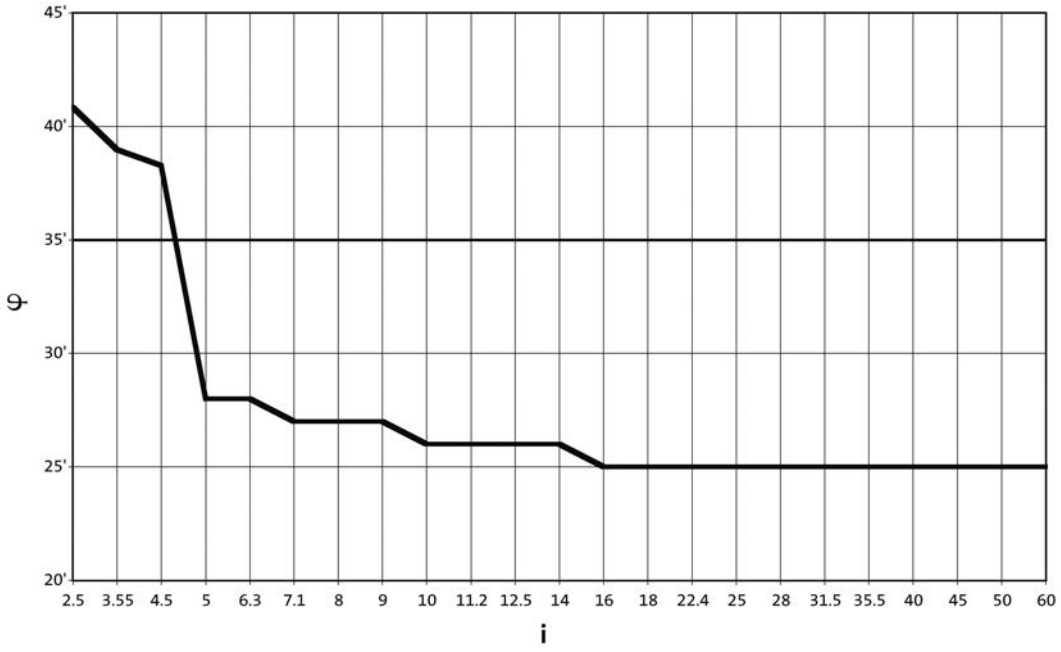

6.1



Output backlash in angular minutes

► Backlash ϕ depending on ratio i

GST04 to 14-2

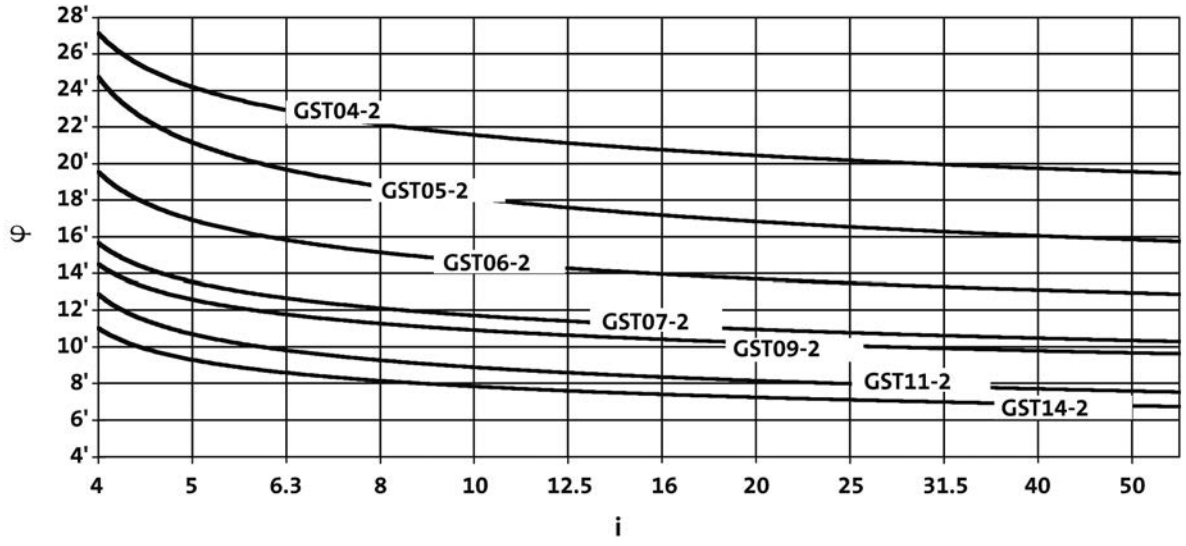

GST05 to 14-3

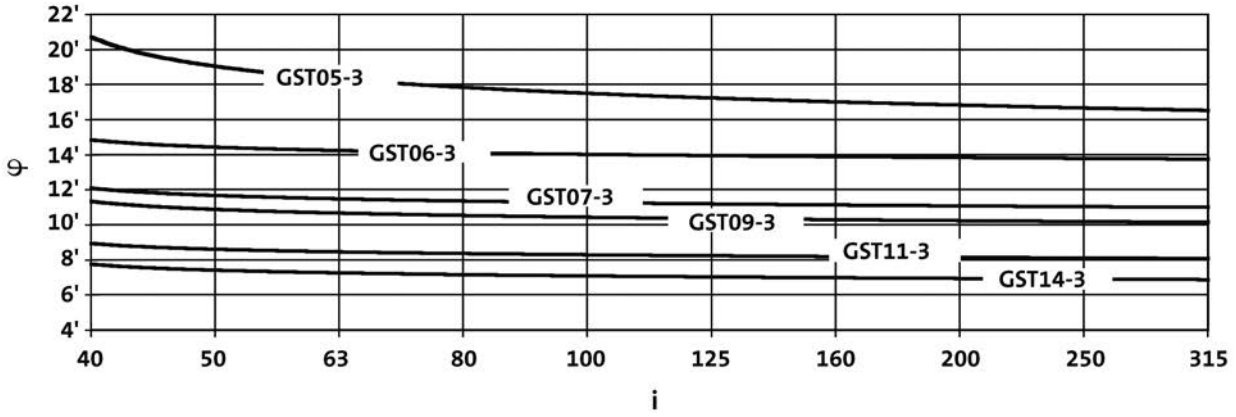

6.1



Moments of inertia

GST□□-1

► Moment of inertia (J) depending on ratio i

Gearbox			GST04
1.600	J	[kgcm²]	0.267
2.048	J	[kgcm²]	0.194
2.240	J	[kgcm²]	0.172
2.857	J	[kgcm²]	0.126
3.500	J	[kgcm²]	0.099
4.400	J	[kgcm²]	0.067
5.667	J	[kgcm²]	0.047
7.182	J	[kgcm²]	0.031
9.000	J	[kgcm²]	0.022
11.857	J	[kgcm²]	0.013

Gearbox			GST05
1.600	J	[kgcm²]	0.760
2.048	J	[kgcm²]	0.549
2.240	J	[kgcm²]	0.480
2.857	J	[kgcm²]	0.354
3.500	J	[kgcm²]	0.272
4.556	J	[kgcm²]	0.175
5.667	J	[kgcm²]	0.129
7.333	J	[kgcm²]	0.062
8.900	J	[kgcm²]	0.060
11.375	J	[kgcm²]	0.039

Gearbox			GST06
1.600	J	[kgcm²]	2.010
2.048	J	[kgcm²]	1.460
2.240	J	[kgcm²]	1.270
2.857	J	[kgcm²]	0.969
3.500	J	[kgcm²]	0.736
4.556	J	[kgcm²]	0.481
5.667	J	[kgcm²]	0.359
7.333	J	[kgcm²]	0.226
8.900	J	[kgcm²]	0.167
11.250	J	[kgcm²]	0.109

Gearbox			GST07
1.625	J	[kgcm²]	6.120
2.000	J	[kgcm²]	4.780
2.240	J	[kgcm²]	4.020
2.857	J	[kgcm²]	2.690
3.500	J	[kgcm²]	2.150
4.556	J	[kgcm²]	1.370
5.583	J	[kgcm²]	1.050
7.333	J	[kgcm²]	0.664
8.900	J	[kgcm²]	0.494
11.250	J	[kgcm²]	0.320

Gearbox			GST09
1.560	J	[kgcm²]	22.200
2.048	J	[kgcm²]	15.600
2.333	J	[kgcm²]	12.200
2.810	J	[kgcm²]	9.580
3.444	J	[kgcm²]	7.300
4.667	J	[kgcm²]	4.600
5.667	J	[kgcm²]	3.510
7.333	J	[kgcm²]	2.260
8.900	J	[kgcm²]	1.660
11.250	J	[kgcm²]	1.110

► The moments of inertia relate to the drive shaft of the gearbox.
► The total moment of inertia is calculated by adding the values of the gearbox, motor and accessories.



Moments of inertia

GST□□-2

► Moment of inertia (J) depending on ratio i

Gearbox			GST03
2.597	J	[kgcm²]	0.260
3.413	J	[kgcm²]	0.169
4.368	J	[kgcm²]	0.117
5.312	J	[kgcm²]	0.179
5.965	J	[kgcm²]	0.173
6.982	J	[kgcm²]	0.122
7.840	J	[kgcm²]	0.119
8.935	J	[kgcm²]	0.089
10.033	J	[kgcm²]	0.086
11.429	J	[kgcm²]	0.059
12.833	J	[kgcm²]	0.057
14.836	J	[kgcm²]	0.041
16.660	J	[kgcm²]	0.040
19.013	J	[kgcm²]	0.028
21.350	J	[kgcm²]	0.027
24.595	J	[kgcm²]	0.019
27.618	J	[kgcm²]	0.019
32.000	J	[kgcm²]	0.012
35.933	J	[kgcm²]	0.012
41.455	J	[kgcm²]	0.008
46.550	J	[kgcm²]	0.008
52.909	J	[kgcm²]	0.005
59.413	J	[kgcm²]	0.005

Gearbox			GST04
2.956	J	[kgcm²]	0.337
3.333	J	[kgcm²]	0.324
4.053	J	[kgcm²]	0.312
4.571	J	[kgcm²]	0.300
5.187	J	[kgcm²]	0.222
5.850	J	[kgcm²]	0.215
6.400	J	[kgcm²]	0.189
7.040	J	[kgcm²]	0.264
8.000	J	[kgcm²]	0.257
9.010	J	[kgcm²]	0.193
9.856	J	[kgcm²]	0.170
11.200	J	[kgcm²]	0.166
12.571	J	[kgcm²]	0.126
14.286	J	[kgcm²]	0.123
15.400	J	[kgcm²]	0.098
17.500	J	[kgcm²]	0.097
19.360	J	[kgcm²]	0.063
22.000	J	[kgcm²]	0.062
24.933	J	[kgcm²]	0.044
28.333	J	[kgcm²]	0.043
31.600	J	[kgcm²]	0.030
35.909	J	[kgcm²]	0.030
39.600	J	[kgcm²]	0.021
45.000	J	[kgcm²]	0.021
52.171	J	[kgcm²]	0.013
59.286	J	[kgcm²]	0.013

► The moments of inertia relate to the drive shaft of the gearbox.
► The total moment of inertia is calculated by adding the values of the gearbox, motor and accessories.



Moments of inertia

GST□□-2

► Moment of inertia (J) depending on ratio i

Gearbox			GST05
2.956	J	[kgcm²]	0.986
3.333	J	[kgcm²]	0.944
4.053	J	[kgcm²]	0.903
4.571	J	[kgcm²]	0.864
5.187	J	[kgcm²]	0.637
5.850	J	[kgcm²]	0.613
6.400	J	[kgcm²]	0.533
7.238	J	[kgcm²]	0.400
8.163	J	[kgcm²]	0.388
9.010	J	[kgcm²]	0.543
10.000	J	[kgcm²]	0.300
11.200	J	[kgcm²]	0.462
13.016	J	[kgcm²]	0.178
14.356	J	[kgcm²]	0.131
16.190	J	[kgcm²]	0.128
17.500	J	[kgcm²]	0.271
20.044	J	[kgcm²]	0.164
22.778	J	[kgcm²]	0.161
24.933	J	[kgcm²]	0.119
28.333	J	[kgcm²]	0.117
32.267	J	[kgcm²]	0.079
36.667	J	[kgcm²]	0.078
39.160	J	[kgcm²]	0.058
44.500	J	[kgcm²]	0.057
50.050	J	[kgcm²]	0.039
56.875	J	[kgcm²]	0.038

Gearbox			GST06
3.033	J	[kgcm²]	2.720
3.333	J	[kgcm²]	2.610
4.160	J	[kgcm²]	2.510
4.571	J	[kgcm²]	2.410
5.324	J	[kgcm²]	1.760
5.850	J	[kgcm²]	1.710
6.400	J	[kgcm²]	1.470
7.040	J	[kgcm²]	2.070
8.163	J	[kgcm²]	1.060
9.010	J	[kgcm²]	1.500
10.000	J	[kgcm²]	0.820
11.200	J	[kgcm²]	1.260
12.571	J	[kgcm²]	0.955
14.286	J	[kgcm²]	0.932
15.400	J	[kgcm²]	0.748
17.500	J	[kgcm²]	0.733
20.044	J	[kgcm²]	0.457
22.778	J	[kgcm²]	0.450
24.933	J	[kgcm²]	0.332
28.333	J	[kgcm²]	0.326
32.267	J	[kgcm²]	0.221
36.667	J	[kgcm²]	0.218
39.160	J	[kgcm²]	0.162
44.500	J	[kgcm²]	0.160
49.500	J	[kgcm²]	0.110
56.250	J	[kgcm²]	0.108

► The moments of inertia relate to the drive shaft of the gearbox.
► The total moment of inertia is calculated by adding the values of the gearbox, motor and accessories.



Moments of inertia

GST□□-2

► Moment of inertia (J) depending on ratio i

Gearbox			GST07
3.048	J	[kgcm²]	8.200
3.350	J	[kgcm²]	7.920
4.225	J	[kgcm²]	7.650
4.643	J	[kgcm²]	7.390
5.200	J	[kgcm²]	5.640
5.714	J	[kgcm²]	5.460
6.400	J	[kgcm²]	4.490
7.150	J	[kgcm²]	6.270
8.125	J	[kgcm²]	6.040
8.800	J	[kgcm²]	4.730
9.856	J	[kgcm²]	3.900
11.200	J	[kgcm²]	3.780
12.571	J	[kgcm²]	2.860
14.286	J	[kgcm²]	2.790
15.400	J	[kgcm²]	2.260
17.500	J	[kgcm²]	2.210
20.044	J	[kgcm²]	1.380
22.778	J	[kgcm²]	1.350
24.567	J	[kgcm²]	1.020
27.917	J	[kgcm²]	1.010
32.267	J	[kgcm²]	0.664
36.667	J	[kgcm²]	0.653
39.160	J	[kgcm²]	0.487
44.500	J	[kgcm²]	0.479
49.500	J	[kgcm²]	0.330
56.250	J	[kgcm²]	0.325

Gearbox			GST09
4.056	J	[kgcm²]	27.000
4.457	J	[kgcm²]	25.900
5.324	J	[kgcm²]	18.100
5.850	J	[kgcm²]	17.500
6.667	J	[kgcm²]	14.200
7.305	J	[kgcm²]	11.300
8.027	J	[kgcm²]	11.000
9.010	J	[kgcm²]	15.200
10.267	J	[kgcm²]	12.400
11.667	J	[kgcm²]	12.100
12.362	J	[kgcm²]	9.790
14.048	J	[kgcm²]	9.530
15.156	J	[kgcm²]	7.650
17.222	J	[kgcm²]	7.490
20.533	J	[kgcm²]	4.500
23.333	J	[kgcm²]	4.410
24.933	J	[kgcm²]	3.380
28.333	J	[kgcm²]	3.320
32.267	J	[kgcm²]	2.250
36.667	J	[kgcm²]	2.210
39.160	J	[kgcm²]	1.640
44.500	J	[kgcm²]	1.620
49.500	J	[kgcm²]	1.120
56.250	J	[kgcm²]	1.100

► The moments of inertia relate to the drive shaft of the gearbox.
► The total moment of inertia is calculated by adding the values of the gearbox, motor and accessories.



Moments of inertia

GST□□-2

► Moment of inertia (J) depending on ratio i

Gearbox			GST11
4.056	J	[kgcm²]	82.200
4.457	J	[kgcm²]	79.000
5.324	J	[kgcm²]	55.400
5.850	J	[kgcm²]	53.500
6.400	J	[kgcm²]	45.700
6.864	J	[kgcm²]	67.500
7.800	J	[kgcm²]	65.100
9.010	J	[kgcm²]	46.800
9.856	J	[kgcm²]	40.200
11.200	J	[kgcm²]	39.000
12.571	J	[kgcm²]	29.400
14.286	J	[kgcm²]	28.700
15.400	J	[kgcm²]	23.000
17.500	J	[kgcm²]	22.500
20.289	J	[kgcm²]	14.300
23.056	J	[kgcm²]	14.100
24.933	J	[kgcm²]	10.600
28.333	J	[kgcm²]	10.400
32.267	J	[kgcm²]	7.040
36.667	J	[kgcm²]	6.930
39.160	J	[kgcm²]	5.150
44.500	J	[kgcm²]	5.080
49.500	J	[kgcm²]	3.520
56.250	J	[kgcm²]	3.440

Gearbox			GST14
4.225	J	[kgcm²]	226.000
4.643	J	[kgcm²]	216.000
5.200	J	[kgcm²]	168.000
5.714	J	[kgcm²]	161.000
6.286	J	[kgcm²]	141.000
7.150	J	[kgcm²]	183.000
8.027	J	[kgcm²]	100.000
8.800	J	[kgcm²]	139.000
9.841	J	[kgcm²]	75.100
11.000	J	[kgcm²]	119.000
12.362	J	[kgcm²]	89.000
14.048	J	[kgcm²]	86.600
15.156	J	[kgcm²]	67.600
17.222	J	[kgcm²]	66.000
20.044	J	[kgcm²]	45.800
22.778	J	[kgcm²]	44.900
24.567	J	[kgcm²]	33.200
27.917	J	[kgcm²]	32.600
32.267	J	[kgcm²]	21.500
36.667	J	[kgcm²]	21.200
39.160	J	[kgcm²]	15.700
44.500	J	[kgcm²]	15.500
49.500	J	[kgcm²]	10.600
56.250	J	[kgcm²]	10.500

► The moments of inertia relate to the drive shaft of the gearbox.
► The total moment of inertia is calculated by adding the values of the gearbox, motor and accessories.



Moments of inertia

GST□□-3

► Moment of inertia (J) depending on ratio i

Gearbox			GST05
36.267	J	[kgcm²]	0.195
46.259	J	[kgcm²]	0.141
56.667	J	[kgcm²]	0.108
63.467	J	[kgcm²]	0.192
71.238	J	[kgcm²]	0.073
80.952	J	[kgcm²]	0.139
91.746	J	[kgcm²]	0.050
99.167	J	[kgcm²]	0.107
116.277	J	[kgcm²]	0.033
124.667	J	[kgcm²]	0.072
145.714	J	[kgcm²]	0.023
160.556	J	[kgcm²]	0.050
179.067	J	[kgcm²]	0.033
191.973	J	[kgcm²]	0.014
224.400	J	[kgcm²]	0.023
255.000	J	[kgcm²]	0.023
295.638	J	[kgcm²]	0.014
335.952	J	[kgcm²]	0.014

Gearbox			GST06
39.200	J	[kgcm²]	0.362
44.000	J	[kgcm²]	0.195
51.022	J	[kgcm²]	0.320
53.900	J	[kgcm²]	0.178
67.760	J	[kgcm²]	0.114
70.156	J	[kgcm²]	0.160
80.952	J	[kgcm²]	0.203
87.267	J	[kgcm²]	0.150
99.167	J	[kgcm²]	0.150
109.707	J	[kgcm²]	0.096
124.667	J	[kgcm²]	0.096
141.289	J	[kgcm²]	0.063
160.556	J	[kgcm²]	0.063
179.067	J	[kgcm²]	0.043
203.485	J	[kgcm²]	0.042
231.733	J	[kgcm²]	0.040
255.000	J	[kgcm²]	0.029
290.400	J	[kgcm²]	0.027
330.000	J	[kgcm²]	0.027
382.590	J	[kgcm²]	0.026
434.762	J	[kgcm²]	0.025

Gearbox			GST07
39.200	J	[kgcm²]	0.974
44.000	J	[kgcm²]	0.534
51.022	J	[kgcm²]	0.843
53.900	J	[kgcm²]	0.484
65.079	J	[kgcm²]	0.313
70.156	J	[kgcm²]	0.431
79.762	J	[kgcm²]	0.536
85.983	J	[kgcm²]	0.400
97.708	J	[kgcm²]	0.399
111.915	J	[kgcm²]	0.238
127.176	J	[kgcm²]	0.237
139.211	J	[kgcm²]	0.166
158.194	J	[kgcm²]	0.166
180.156	J	[kgcm²]	0.108
204.722	J	[kgcm²]	0.107
236.622	J	[kgcm²]	0.101
248.458	J	[kgcm²]	0.077
268.889	J	[kgcm²]	0.101
326.333	J	[kgcm²]	0.073
367.033	J	[kgcm²]	0.094
417.083	J	[kgcm²]	0.067

Gearbox			GST09
40.136	J	[kgcm²]	2.140
43.267	J	[kgcm²]	1.550
49.167	J	[kgcm²]	1.530
53.044	J	[kgcm²]	1.380
60.278	J	[kgcm²]	1.370
71.867	J	[kgcm²]	1.170
81.667	J	[kgcm²]	1.160
93.541	J	[kgcm²]	0.706
99.167	J	[kgcm²]	1.070
113.585	J	[kgcm²]	0.652
129.074	J	[kgcm²]	0.649
141.289	J	[kgcm²]	0.458
160.556	J	[kgcm²]	0.456
182.844	J	[kgcm²]	0.297
207.778	J	[kgcm²]	0.295
236.622	J	[kgcm²]	0.275
252.167	J	[kgcm²]	0.212
268.889	J	[kgcm²]	0.275
326.333	J	[kgcm²]	0.198
363.000	J	[kgcm²]	0.255
412.500	J	[kgcm²]	0.183

► The moments of inertia relate to the drive shaft of the gearbox.
► The total moment of inertia is calculated by adding the values of the gearbox, motor and accessories.



Moments of inertia

GST□□-3

► Moment of inertia (J) depending on ratio i

Gearbox			GST11
40.816	J	[kgcm²]	6.360
44.000	J	[kgcm²]	5.660
50.000	J	[kgcm²]	5.600
57.968	J	[kgcm²]	4.770
61.250	J	[kgcm²]	4.080
71.011	J	[kgcm²]	3.520
80.694	J	[kgcm²]	3.500
87.267	J	[kgcm²]	3.220
99.167	J	[kgcm²]	3.200
112.933	J	[kgcm²]	2.930
129.074	J	[kgcm²]	1.940
146.993	J	[kgcm²]	1.770
158.194	J	[kgcm²]	1.400
180.156	J	[kgcm²]	1.290
207.778	J	[kgcm²]	0.880
236.622	J	[kgcm²]	0.818
252.167	J	[kgcm²]	0.633
268.889	J	[kgcm²]	0.816
326.333	J	[kgcm²]	0.589
363.000	J	[kgcm²]	0.756
412.500	J	[kgcm²]	0.545

Gearbox			GST14
40.185	J	[kgcm²]	24.400
42.580	J	[kgcm²]	18.300
48.386	J	[kgcm²]	18.100
53.148	J	[kgcm²]	20.500
59.321	J	[kgcm²]	13.200
69.042	J	[kgcm²]	11.500
78.457	J	[kgcm²]	11.400
93.541	J	[kgcm²]	6.570
96.157	J	[kgcm²]	10.400
106.296	J	[kgcm²]	6.520
130.278	J	[kgcm²]	6.000
139.211	J	[kgcm²]	4.420
158.194	J	[kgcm²]	4.400
171.111	J	[kgcm²]	5.490
204.722	J	[kgcm²]	2.860
236.622	J	[kgcm²]	2.650
248.458	J	[kgcm²]	2.060
268.889	J	[kgcm²]	2.650
326.333	J	[kgcm²]	1.920
363.000	J	[kgcm²]	2.450
412.500	J	[kgcm²]	1.780

► The moments of inertia relate to the drive shaft of the gearbox.
► The total moment of inertia is calculated by adding the values of the gearbox, motor and accessories.



Weights, 4-pole motors

1-stage gearboxes

				m200					
				-P132L4	-P132M4	-P160L4	-P160M4	-P180L4	-P180M4
GST	GST06	m	[kg]		69				
	GST07	m	[kg]	80	78				
	GST09	m	[kg]	93	91	135	128	171	162

2-stage gearboxes

				m200							
				-P132L4	-P132M4	-P160L4	-P160M4	-P180L4	-P180M4	-P180V4	-P225M4
GST	GST06	m	[kg]	77	75						
	GST07	m	[kg]	90	88		126				
	GST09	m	[kg]	114	112	156	149	192	183		
	GST11	m	[kg]	152	150	194	187	230	221		
	GST14	m	[kg]	228	226	270	263	306	297	354	434

3-stage gearboxes

				m200					
				-P132L4	-P132M4	-P160L4	-P160M4	-P180L4	-P180M4
GST	GST09	m	[kg]		124				
	GST11	m	[kg]	174	172				
	GST14	m	[kg]	268	266	310	303	346	337

► Weights with oil filling for mounting position A; all values are approximate.
The weights relate to the basic version. Bear in mind that additional weights may be needed, e.g. for motor options.



Additional weights for gearboxes

Product	Mass	
	Foot	Flange
	m	m
	[kg]	[kg]
GST06	2.70	3.00
GST07	4.40	4.00
GST09	8.50	7.00
GST11	14.9	10.5
GST14	28.0	15.5



Selection tables, 4-pole motors

50 Hz: P_N = 5.5 kW

1-stage gearboxes

Mains operation 400 V, 50 Hz			i	Product		
n_2 [r/min]	M_2 [Nm]	c		GST	m200	
916	57	1.1	1.600	GST06	-P132M4	51
902	57	1.9	1.625	GST07	-P132M4	57
733	71	1.8	2.000	GST07	-P132M4	57
716	72	1.0	2.048	GST06	-P132M4	51
654	79	1.7	2.240	GST07	-P132M4	57
654	79	1.0	2.240	GST06	-P132M4	51
419	124	1.4	3.500	GST07	-P132M4	57
419	124	0.9	3.500	GST06	-P132M4	51
322	161	1.2	4.556	GST07	-P132M4	57
314	165	2.3	4.667	GST09	-P132M4	63
259	200	2.3	5.667	GST09	-P132M4	63

2-stage gearboxes

Mains operation 400 V, 50 Hz			i	Product		
n_2 [r/min]	M_2 [Nm]	c		GST	m200	
483	106	1.6	3.033	GST06	-P132M4	54
440	116	1.5	3.333	GST06	-P132M4	54
437	117	3.2	3.350	GST07	-P132M4	60
352	145	1.3	4.160	GST06	-P132M4	54
347	147	2.7	4.225	GST07	-P132M4	60
321	159	1.3	4.571	GST06	-P132M4	54
316	161	2.6	4.643	GST07	-P132M4	60
282	181	2.4	5.200	GST07	-P132M4	60
275	185	1.1	5.324	GST06	-P132M4	54
256	199	2.3	5.714	GST07	-P132M4	60
250	203	1.1	5.850	GST06	-P132M4	54
229	223	1.0	6.400	GST06	-P132M4	54
229	223	2.1	6.400	GST07	-P132M4	60
208	245	1.0	7.040	GST06	-P132M4	54
205	249	2.0	7.150	GST07	-P132M4	60
180	283	1.9	8.125	GST07	-P132M4	60
180	284	0.9	8.163	GST06	-P132M4	54
167	306	1.7	8.800	GST07	-P132M4	60
163	313	0.8	9.010	GST06	-P132M4	54
149	343	1.6	9.856	GST07	-P132M4	60
131	390	1.5	11.200	GST07	-P132M4	60
126	406	3.0	11.667	GST09	-P132M4	66
119	430	2.9	12.362	GST09	-P132M4	66
117	437	1.4	12.571	GST07	-P132M4	60
104	489	2.6	14.048	GST09	-P132M4	66
103	497	1.3	14.286	GST07	-P132M4	60



Selection tables, 4-pole motors

50 Hz: P_N = 5.5 kW

2-stage gearboxes

Mains operation 400 V, 50 Hz			i	Product		
n_2 [r/min]	M_2 [Nm]	c		GST	m200	
97	527	2.5	15.156	GST09	-P132M4	66
95	536	1.2	15.400	GST07	-P132M4	60
85	599	2.3	17.222	GST09	-P132M4	66
84	609	1.1	17.500	GST07	-P132M4	60
73	697	1.0	20.044	GST07	-P132M4	60
71	714	2.1	20.533	GST09	-P132M4	66
64	792	0.9	22.778	GST07	-P132M4	60
63	812	1.9	23.333	GST09	-P132M4	66
59	867	3.2	24.933	GST11	-P132M4	72
59	867	1.8	24.933	GST09	-P132M4	66
52	986	3.0	28.333	GST11	-P132M4	72
52	986	1.5	28.333	GST09	-P132M4	66
45	1122	2.5	32.267	GST11	-P132M4	72
40	1275	2.3	36.667	GST11	-P132M4	72
37	1362	2.1	39.160	GST11	-P132M4	72
33	1548	1.9	44.500	GST11	-P132M4	72
30	1722	2.5	49.500	GST14	-P132M4	78
26	1957	2.5	56.250	GST14	-P132M4	78

3-stage gearboxes

Mains operation 400 V, 50 Hz			i	Product		
n_2 [r/min]	M_2 [Nm]	c		GST	m200	
37	1375	1.0	40.136	GST09	-P132M4	69
37	1377	3.3	40.185	GST14	-P132M4	81
36	1398	1.8	40.816	GST11	-P132M4	75
34	1459	2.9	42.580	GST14	-P132M4	81
34	1482	0.9	43.267	GST09	-P132M4	69
33	1508	1.6	44.000	GST11	-P132M4	75
30	1658	2.9	48.386	GST14	-P132M4	81
30	1685	0.9	49.167	GST09	-P132M4	69
29	1713	1.6	50.000	GST11	-P132M4	75
28	1821	2.6	53.148	GST14	-P132M4	81
25	1986	1.3	57.968	GST11	-P132M4	75
25	2032	2.6	59.321	GST14	-P132M4	81
24	2099	1.3	61.250	GST11	-P132M4	75
21	2365	2.1	69.042	GST14	-P132M4	81
21	2433	1.1	71.011	GST11	-P132M4	75
19	2688	2.1	78.457	GST14	-P132M4	81
18	2765	1.0	80.694	GST11	-P132M4	75
17	2990	0.9	87.267	GST11	-P132M4	75
16	3205	1.7	93.541	GST14	-P132M4	81



Selection tables, 4-pole motors

50 Hz: P_N = 5.5 kW

3-stage gearboxes

Mains operation 400 V, 50 Hz			i	Product		
n_2 [r/min]	M_2 [Nm]	c		GST	m200	
15	3294	1.8	96.157	GST14	-P132M4	81
15	3398	0.8	99.167	GST11	-P132M4	75
14	3642	1.6	106.296	GST14	-P132M4	81
11	4463	1.3	130.278	GST14	-P132M4	81
11	4770	1.2	139.211	GST14	-P132M4	81
9.3	5420	1.1	158.194	GST14	-P132M4	81
8.6	5863	1.0	171.111	GST14	-P132M4	81



Selection tables, 4-pole motors

50 Hz: P_N = 7.5 kW

1-stage gearboxes

Mains operation 400 V, 50 Hz			i	Product		
n_2 [r/min]	M_2 [Nm]	c		GST	m200	
899	79	1.4	1.625	GST07	-P132L4	57
730	97	1.3	2.000	GST07	-P132L4	57
652	108	1.2	2.240	GST07	-P132L4	57
520	136	3.1	2.810	GST09	-P132L4	63
511	138	1.2	2.857	GST07	-P132L4	57
424	166	2.7	3.444	GST09	-P132L4	63
417	169	1.0	3.500	GST07	-P132L4	57
321	220	0.8	4.556	GST07	-P132L4	57
313	225	1.7	4.667	GST09	-P132L4	63
258	274	1.7	5.667	GST09	-P132L4	63

2-stage gearboxes

Mains operation 400 V, 50 Hz			i	Product		
n_2 [r/min]	M_2 [Nm]	c		GST	m200	
481	144	1.2	3.033	GST06	-P132L4	54
479	145	2.4	3.048	GST07	-P132L4	60
438	159	1.1	3.333	GST06	-P132L4	54
436	159	2.3	3.350	GST07	-P132L4	60
351	198	1.0	4.160	GST06	-P132L4	54
346	201	2.0	4.225	GST07	-P132L4	60
319	218	0.9	4.571	GST06	-P132L4	54
315	221	1.9	4.643	GST07	-P132L4	60
281	247	1.7	5.200	GST07	-P132L4	60
274	253	0.8	5.324	GST06	-P132L4	54
256	272	1.7	5.714	GST07	-P132L4	60
228	305	1.5	6.400	GST07	-P132L4	60
204	340	1.4	7.150	GST07	-P132L4	60
200	348	3.2	7.305	GST09	-P132L4	66
182	382	3.0	8.027	GST09	-P132L4	66
180	387	1.4	8.125	GST07	-P132L4	60
166	419	1.3	8.800	GST07	-P132L4	60
162	429	2.6	9.010	GST09	-P132L4	66
148	469	1.2	9.856	GST07	-P132L4	60
142	489	2.4	10.267	GST09	-P132L4	66
130	533	1.1	11.200	GST07	-P132L4	60
125	555	2.2	11.667	GST09	-P132L4	66
118	588	2.1	12.362	GST09	-P132L4	66
116	598	1.0	12.571	GST07	-P132L4	60
104	669	1.9	14.048	GST09	-P132L4	66
102	680	0.9	14.286	GST07	-P132L4	60
96	721	1.9	15.156	GST09	-P132L4	66



Selection tables, 4-pole motors

50 Hz: P_N = 7.5 kW

2-stage gearboxes

Mains operation 400 V, 50 Hz			i	Product		
n_2 [r/min]	M_2 [Nm]	c		GST	m200	
95	733	0.9	15.400	GST07	-P132L4	60
85	820	1.7	17.222	GST09	-P132L4	66
83	833	0.8	17.500	GST07	-P132L4	60
72	966	2.9	20.289	GST11	-P132L4	72
71	977	1.5	20.533	GST09	-P132L4	66
63	1097	2.7	23.056	GST11	-P132L4	72
63	1111	1.4	23.333	GST09	-P132L4	66
59	1187	2.3	24.933	GST11	-P132L4	72
59	1187	1.3	24.933	GST09	-P132L4	66
52	1348	2.2	28.333	GST11	-P132L4	72
52	1348	1.1	28.333	GST09	-P132L4	66
45	1536	1.8	32.267	GST11	-P132L4	72
45	1536	3.1	32.267	GST14	-P132L4	78
40	1745	1.7	36.667	GST11	-P132L4	72
40	1745	3.1	36.667	GST14	-P132L4	78
37	1864	2.6	39.160	GST14	-P132L4	78
33	2118	2.6	44.500	GST14	-P132L4	78

3-stage gearboxes

Mains operation 400 V, 50 Hz			i	Product		
n_2 [r/min]	M_2 [Nm]	c		GST	m200	
36	1884	2.4	40.185	GST14	-P132L4	81
36	1913	1.3	40.816	GST11	-P132L4	75
34	1996	2.1	42.580	GST14	-P132L4	81
33	2063	1.2	44.000	GST11	-P132L4	75
30	2268	2.1	48.386	GST14	-P132L4	81
29	2344	1.2	50.000	GST11	-P132L4	75
28	2492	1.9	53.148	GST14	-P132L4	81
25	2718	1.0	57.968	GST11	-P132L4	75
25	2781	1.9	59.321	GST14	-P132L4	81
24	2871	1.0	61.250	GST11	-P132L4	75
21	3237	1.5	69.042	GST14	-P132L4	81
19	3678	1.5	78.457	GST14	-P132L4	81
16	4385	1.3	93.541	GST14	-P132L4	81
15	4508	1.3	96.157	GST14	-P132L4	81
14	4983	1.2	106.296	GST14	-P132L4	81
11	6107	1.0	130.278	GST14	-P132L4	81
11	6526	0.9	139.211	GST14	-P132L4	81



Selection tables, 4-pole motors

50 Hz: P_N = 11.0 kW

1-stage gearboxes

Mains operation 400 V, 50 Hz			i	Product		
n_2 [r/min]	M_2 [Nm]	c		GST	m200	
942	110	2.5	1.560	GST09	-P160M4	63
718	144	2.4	2.048	GST09	-P160M4	63
630	164	2.3	2.333	GST09	-P160M4	63
523	198	2.1	2.810	GST09	-P160M4	63
427	242	1.8	3.444	GST09	-P160M4	63

2-stage gearboxes

Mains operation 400 V, 50 Hz			i	Product		
n_2 [r/min]	M_2 [Nm]	c		GST	m200	
482	211	1.7	3.048	GST07	-P160M4	60
439	232	1.6	3.350	GST07	-P160M4	60
362	281	3.1	4.056	GST09	-P160M4	66
348	293	1.4	4.225	GST07	-P160M4	60
330	309	3.0	4.457	GST09	-P160M4	66
317	322	1.3	4.643	GST07	-P160M4	60
283	361	1.2	5.200	GST07	-P160M4	60
276	369	2.7	5.324	GST09	-P160M4	66
251	406	2.5	5.850	GST09	-P160M4	66
230	444	1.0	6.400	GST07	-P160M4	60
221	462	2.3	6.667	GST09	-P160M4	66
201	506	2.2	7.305	GST09	-P160M4	66
183	557	2.0	8.027	GST09	-P160M4	66
163	625	1.8	9.010	GST09	-P160M4	66
143	712	1.7	10.267	GST09	-P160M4	66
131	776	3.1	11.200	GST11	-P160M4	72
126	809	1.5	11.667	GST09	-P160M4	66
119	857	1.5	12.362	GST09	-P160M4	66
117	872	2.9	12.571	GST11	-P160M4	72
105	974	1.3	14.048	GST09	-P160M4	66
103	990	2.6	14.286	GST11	-P160M4	72
97	1051	1.3	15.156	GST09	-P160M4	66
96	1068	2.5	15.400	GST11	-P160M4	72
85	1194	1.2	17.222	GST09	-P160M4	66
84	1213	2.3	17.500	GST11	-P160M4	72
73	1407	2.0	20.289	GST11	-P160M4	72
65	1579	3.2	22.778	GST14	-P160M4	78
64	1598	1.8	23.056	GST11	-P160M4	72
60	1703	3.1	24.567	GST14	-P160M4	78
59	1729	1.6	24.933	GST11	-P160M4	72
53	1935	2.8	27.917	GST14	-P160M4	78
52	1964	1.5	28.333	GST11	-P160M4	72



Selection tables, 4-pole motors

50 Hz: P_N = 11.0 kW

2-stage gearboxes

Mains operation 400 V, 50 Hz			i	Product		
n_2 [r/min]	M_2 [Nm]	c		GST	m200	
46	2237	2.4	32.267	GST14	-P160M4	78
40	2542	2.3	36.667	GST14	-P160M4	78
38	2715	2.0	39.160	GST14	-P160M4	78
33	3085	1.9	44.500	GST14	-P160M4	78

3-stage gearboxes

Mains operation 400 V, 50 Hz			i	Product		
n_2 [r/min]	M_2 [Nm]	c		GST	m200	
37	2744	1.6	40.185	GST14	-P160M4	81
35	2908	1.5	42.580	GST14	-P160M4	81
30	3304	1.5	48.386	GST14	-P160M4	81
28	3629	1.3	53.148	GST14	-P160M4	81
25	4051	1.3	59.321	GST14	-P160M4	81
21	4715	1.0	69.042	GST14	-P160M4	81
19	5358	1.0	78.457	GST14	-P160M4	81
15	6567	0.9	96.157	GST14	-P160M4	81



Selection tables, 4-pole motors

50 Hz: P_N = 15.0 kW

1-stage gearboxes

Mains operation 400 V, 50 Hz			i	Product		
n_2 [r/min]	M_2 [Nm]	c		GST	m200	
942	150	1.9	1.560	GST09	-P160L4	63
718	197	1.7	2.048	GST09	-P160L4	63
630	224	1.7	2.333	GST09	-P160L4	63
523	270	1.6	2.810	GST09	-P160L4	63
427	331	1.3	3.444	GST09	-P160L4	63

2-stage gearboxes

Mains operation 400 V, 50 Hz			i	Product		
n_2 [r/min]	M_2 [Nm]	c		GST	m200	
362	383	2.3	4.056	GST09	-P160L4	66
330	421	2.2	4.457	GST09	-P160L4	66
276	503	3.2	5.324	GST11	-P160L4	72
276	503	2.0	5.324	GST09	-P160L4	66
251	553	3.2	5.850	GST11	-P160L4	72
251	553	1.8	5.850	GST09	-P160L4	66
230	605	3.0	6.400	GST11	-P160L4	72
221	630	1.7	6.667	GST09	-P160L4	66
214	649	3.2	6.864	GST11	-P160L4	72
201	691	1.6	7.305	GST09	-P160L4	66
189	737	2.9	7.800	GST11	-P160L4	72
183	759	1.5	8.027	GST09	-P160L4	66
163	852	2.7	9.010	GST11	-P160L4	72
163	852	1.3	9.010	GST09	-P160L4	66
149	932	2.5	9.856	GST11	-P160L4	72
143	971	1.2	10.267	GST09	-P160L4	66
131	1059	2.3	11.200	GST11	-P160L4	72
126	1103	1.1	11.667	GST09	-P160L4	66
119	1169	1.1	12.362	GST09	-P160L4	66
117	1189	2.1	12.571	GST11	-P160L4	72
105	1328	3.2	14.048	GST14	-P160L4	78
105	1328	1.0	14.048	GST09	-P160L4	66
103	1351	1.9	14.286	GST11	-P160L4	72
97	1433	3.1	15.156	GST14	-P160L4	78
97	1433	0.9	15.156	GST09	-P160L4	66
96	1456	1.9	15.400	GST11	-P160L4	72
85	1628	2.8	17.222	GST14	-P160L4	78
85	1628	0.8	17.222	GST09	-P160L4	66
84	1654	1.7	17.500	GST11	-P160L4	72
73	1895	2.6	20.044	GST14	-P160L4	78
73	1918	1.4	20.289	GST11	-P160L4	72
65	2153	2.3	22.778	GST14	-P160L4	78



Selection tables, 4-pole motors

50 Hz: P_N = 15.0 kW

2-stage gearboxes

Mains operation 400 V, 50 Hz			i	Product		
n_2 [r/min]	M_2 [Nm]	c		GST	m200	
64	2180	1.3	23.056	GST11	-P160L4	72
60	2323	2.3	24.567	GST14	-P160L4	78
59	2357	1.2	24.933	GST11	-P160L4	72
53	2639	2.0	27.917	GST14	-P160L4	78
52	2679	1.1	28.333	GST11	-P160L4	72
46	3051	1.8	32.267	GST14	-P160L4	78
40	3466	1.7	36.667	GST14	-P160L4	78
38	3702	1.5	39.160	GST14	-P160L4	78
33	4207	1.4	44.500	GST14	-P160L4	78

3-stage gearboxes

Mains operation 400 V, 50 Hz			i	Product		
n_2 [r/min]	M_2 [Nm]	c		GST	m200	
37	3742	1.2	40.185	GST14	-P160L4	81
35	3965	1.1	42.580	GST14	-P160L4	81
30	4506	1.1	48.386	GST14	-P160L4	81
28	4949	1.0	53.148	GST14	-P160L4	81
25	5524	1.0	59.321	GST14	-P160L4	81



Selection tables, 4-pole motors

50 Hz: P_N = 18.5 kW

1-stage gearboxes

Mains operation 400 V, 50 Hz			i	Product		
n_2 [r/min]	M_2 [Nm]	c		GST	m200	
713	244	1.4	2.048	GST09	-P180M4	63
626	278	1.3	2.333	GST09	-P180M4	63
520	335	1.3	2.810	GST09	-P180M4	63
424	411	1.1	3.444	GST09	-P180M4	63

2-stage gearboxes

Mains operation 400 V, 50 Hz			i	Product		
n_2 [r/min]	M_2 [Nm]	c		GST	m200	
360	476	3.1	4.056	GST11	-P180M4	72
360	476	1.8	4.056	GST09	-P180M4	66
328	523	3.1	4.457	GST11	-P180M4	72
328	523	1.8	4.457	GST09	-P180M4	66
274	625	2.6	5.324	GST11	-P180M4	72
274	625	1.6	5.324	GST09	-P180M4	66
250	687	2.6	5.850	GST11	-P180M4	72
250	687	1.5	5.850	GST09	-P180M4	66
228	751	2.4	6.400	GST11	-P180M4	72
219	783	1.4	6.667	GST09	-P180M4	66
200	858	1.3	7.305	GST09	-P180M4	66
182	942	1.2	8.027	GST09	-P180M4	66
162	1058	2.1	9.010	GST11	-P180M4	72
148	1155	3.1	9.841	GST14	-P180M4	78
148	1157	2.0	9.856	GST11	-P180M4	72
133	1291	3.1	11.000	GST14	-P180M4	78
130	1315	1.8	11.200	GST11	-P180M4	72
118	1451	2.9	12.362	GST14	-P180M4	78
116	1476	1.7	12.571	GST11	-P180M4	72
104	1649	2.6	14.048	GST14	-P180M4	78
102	1677	1.5	14.286	GST11	-P180M4	72
96	1779	2.5	15.156	GST14	-P180M4	78
95	1808	1.5	15.400	GST11	-P180M4	72
85	2022	2.3	17.222	GST14	-P180M4	78
83	2054	1.3	17.500	GST11	-P180M4	72
73	2353	2.1	20.044	GST14	-P180M4	78
72	2382	1.2	20.289	GST11	-P180M4	72
64	2674	1.9	22.778	GST14	-P180M4	78
63	2707	1.1	23.056	GST11	-P180M4	72
59	2884	1.8	24.567	GST14	-P180M4	78
59	2927	1.0	24.933	GST11	-P180M4	72
52	3277	1.6	27.917	GST14	-P180M4	78
52	3326	0.9	28.333	GST11	-P180M4	72



Selection tables, 4-pole motors

50 Hz: P_N = 18.5 kW

2-stage gearboxes

Mains operation 400 V, 50 Hz			i	Product		
n_2 [r/min]	M_2 [Nm]	c		GST	m200	
45	3788	1.4	32.267	GST14	-P180M4	78
40	4305	1.3	36.667	GST14	-P180M4	78

3-stage gearboxes

Mains operation 400 V, 50 Hz			i	Product		
n_2 [r/min]	M_2 [Nm]	c		GST	m200	
36	4647	1.0	40.185	GST14	-P180M4	81
34	4924	0.9	42.580	GST14	-P180M4	81
30	5595	0.9	48.386	GST14	-P180M4	81



Selection tables, 4-pole motors

50 Hz: P_N = 22.0 kW

1-stage gearboxes

Mains operation 400 V, 50 Hz			i	Product		
n_2 [r/min]	M_2 [Nm]	c		GST	m200	
628	330	1.1	2.333	GST09	-P180L4	63
521	397	1.1	2.810	GST09	-P180L4	63
425	487	0.9	3.444	GST09	-P180L4	63

2-stage gearboxes

Mains operation 400 V, 50 Hz			i	Product		
n_2 [r/min]	M_2 [Nm]	c		GST	m200	
282	723	3.2	5.200	GST14	-P180L4	78
275	741	2.2	5.324	GST11	-P180L4	72
275	741	1.3	5.324	GST09	-P180L4	66
256	795	3.2	5.714	GST14	-P180L4	78
250	814	2.2	5.850	GST11	-P180L4	72
233	875	3.1	6.286	GST14	-P180L4	78
229	890	2.0	6.400	GST11	-P180L4	72
220	928	1.2	6.667	GST09	-P180L4	66
201	1016	1.1	7.305	GST09	-P180L4	66
183	1117	2.9	8.027	GST14	-P180L4	78
183	1117	1.0	8.027	GST09	-P180L4	66
163	1254	1.8	9.010	GST11	-P180L4	72
149	1369	2.6	9.841	GST14	-P180L4	78
149	1371	1.7	9.856	GST11	-P180L4	72
119	1720	2.4	12.362	GST14	-P180L4	78
117	1749	1.4	12.571	GST11	-P180L4	72
104	1954	2.2	14.048	GST14	-P180L4	78
103	1988	1.3	14.286	GST11	-P180L4	72
97	2109	2.1	15.156	GST14	-P180L4	78
95	2143	1.3	15.400	GST11	-P180L4	72
85	2396	1.9	17.222	GST14	-P180L4	78
84	2435	1.1	17.500	GST11	-P180L4	72
73	2789	1.8	20.044	GST14	-P180L4	78
72	2823	1.0	20.289	GST11	-P180L4	72
64	3169	1.6	22.778	GST14	-P180L4	78
64	3208	0.9	23.056	GST11	-P180L4	72
60	3418	1.5	24.567	GST14	-P180L4	78
59	3469	0.8	24.933	GST11	-P180L4	72
53	3884	1.4	27.917	GST14	-P180L4	78
45	4489	1.2	32.267	GST14	-P180L4	78
40	5102	1.1	36.667	GST14	-P180L4	78



Selection tables, 4-pole motors

50 Hz: P_N = 22.0 kW

3-stage gearboxes

Mains operation 400 V, 50 Hz			i	Product		
n_2 [r/min]	M_2 [Nm]	c		GST	m200	
37	5507	0.8	40.185	GST14	-P180L4	81



Selection tables, 4-pole motors

50 Hz: P_N = 30.0 kW

2-stage gearboxes

Mains operation 400 V, 50 Hz			i	Product		
n_2 [r/min]	M_2 [Nm]	c		GST	m200	
150	1854	1.9	9.841	GST14	-P180V4	78
119	2329	1.8	12.362	GST14	-P180V4	78
97	2856	1.6	15.156	GST14	-P180V4	78
74	3777	1.3	20.044	GST14	-P180V4	78
65	4292	1.2	22.778	GST14	-P180V4	78



Selection tables, 4-pole motors

50 Hz: P_N = 37.0 kW

2-stage gearboxes

Mains operation 400 V, 50 Hz			i	Product		
n_2 [r/min]	M_2 [Nm]	c		GST	m200	
185	1853	2.0	8.027	GST14	-P225M4	78
151	2272	1.7	9.841	GST14	-P225M4	78
74	4627	1.1	20.044	GST14	-P225M4	78



Dimensions, 4-pole motors

GST06, 1-stage gearboxes

Dimensions with solid shaft and foot (VBR)

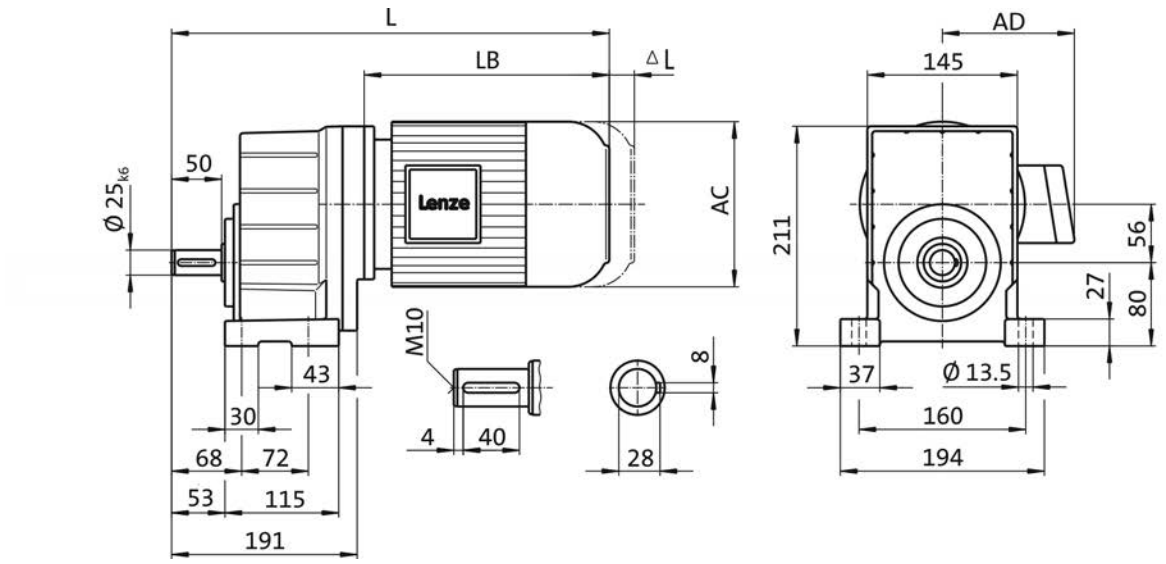

Product			m200
			-P132M4
Dimensions			
Total length	**L**	**[mm]**	617
Motor length	**LB**	**[mm]**	400
Length of motor options	**Δ L**	**[mm]**	118
Motor diameter	**AC**	**[mm]**	281
Distance motor/connection	**AD**	**[mm]**	182



Dimensions, 4-pole motors

GST06, 1-stage gearboxes

Dimensions with solid shaft and centering (VCR)

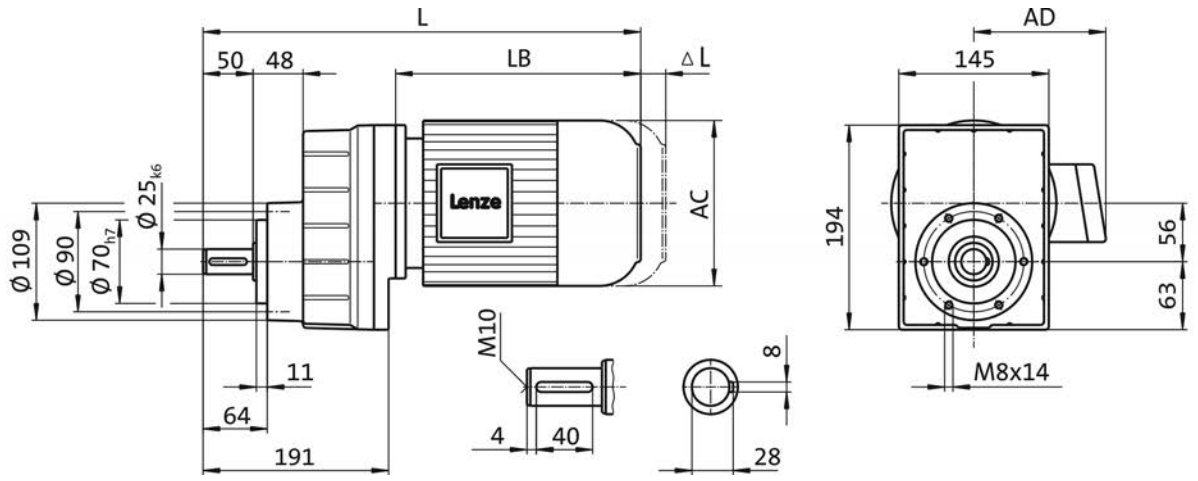

Product			m200
			-P132M4
Dimensions			
Total length	**L**	**[mm]**	617
Motor length	**LB**	**[mm]**	400
Length of motor options	**Δ L**	**[mm]**	118
Motor diameter	**AC**	**[mm]**	281
Distance motor/connection	**AD**	**[mm]**	182



Dimensions, 4-pole motors

GST06, 1-stage gearboxes

Dimensions with solid shaft and flange (VCK)

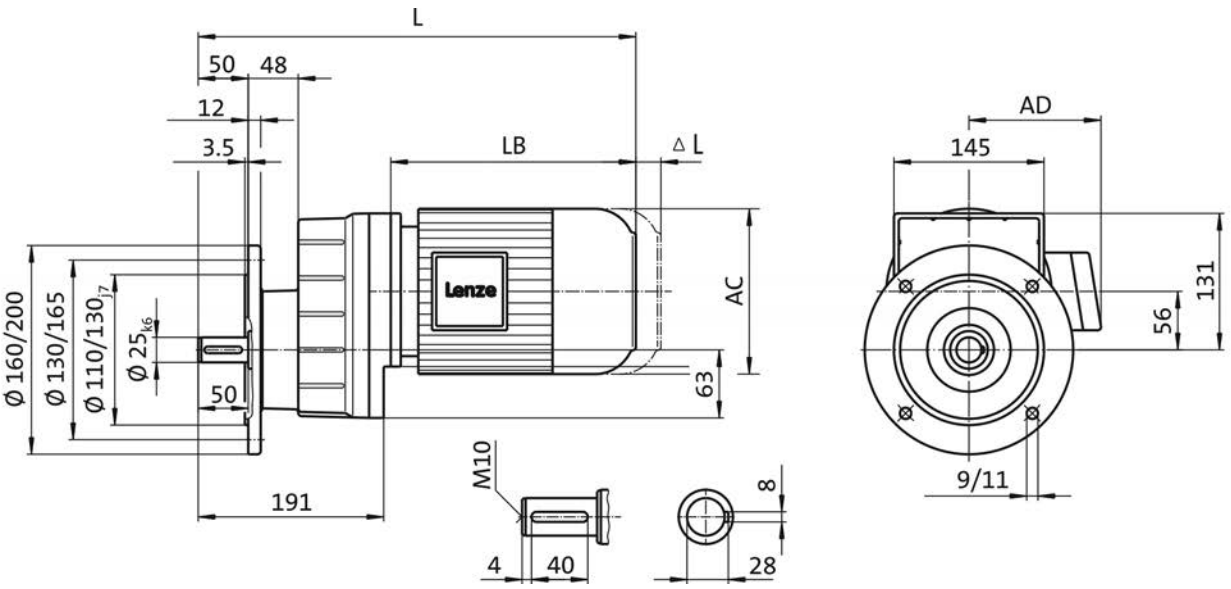

Product			m200
			-P132M4
Dimensions			
Total length	**L**	**[mm]**	617
Motor length	**LB**	**[mm]**	400
Length of motor options	**Δ L**	**[mm]**	118
Motor diameter	**AC**	**[mm]**	281
Distance motor/connection	**AD**	**[mm]**	182



Dimensions, 4-pole motors

GST06, 2-stage gearboxes

Dimensions with solid shaft and foot (VBR)

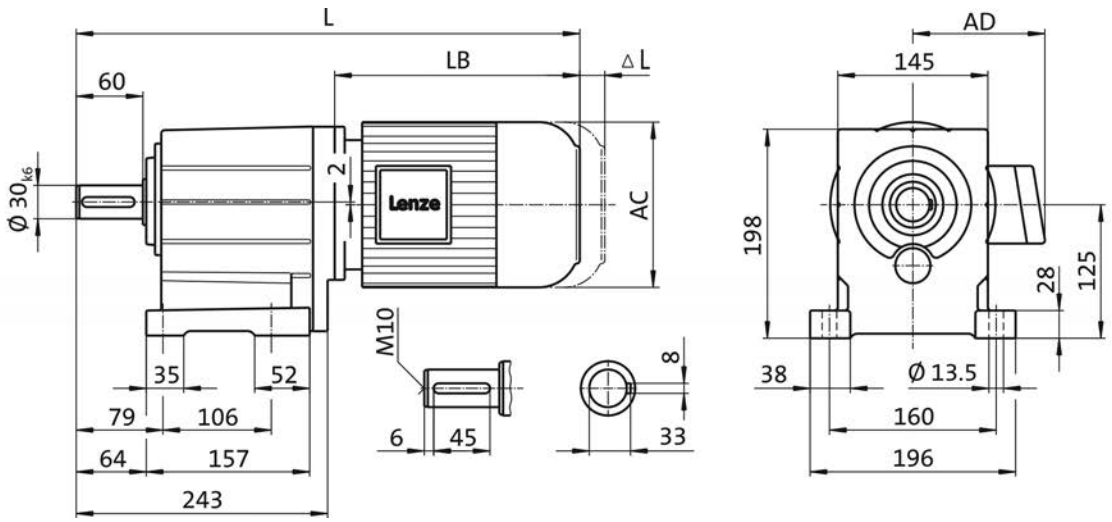

Product			m200	
			-P132L4	-P132M4
Dimensions				
Total length	**L**	**[mm]**	669	
Motor length	**LB**	**[mm]**	400	
Length of motor options	**Δ L**	**[mm]**	118	
Motor diameter	**AC**	**[mm]**	281	
Distance motor/connection	**AD**	**[mm]**	182	



Dimensions, 4-pole motors

GST06, 2-stage gearboxes

Dimensions with solid shaft and centering (VCR)

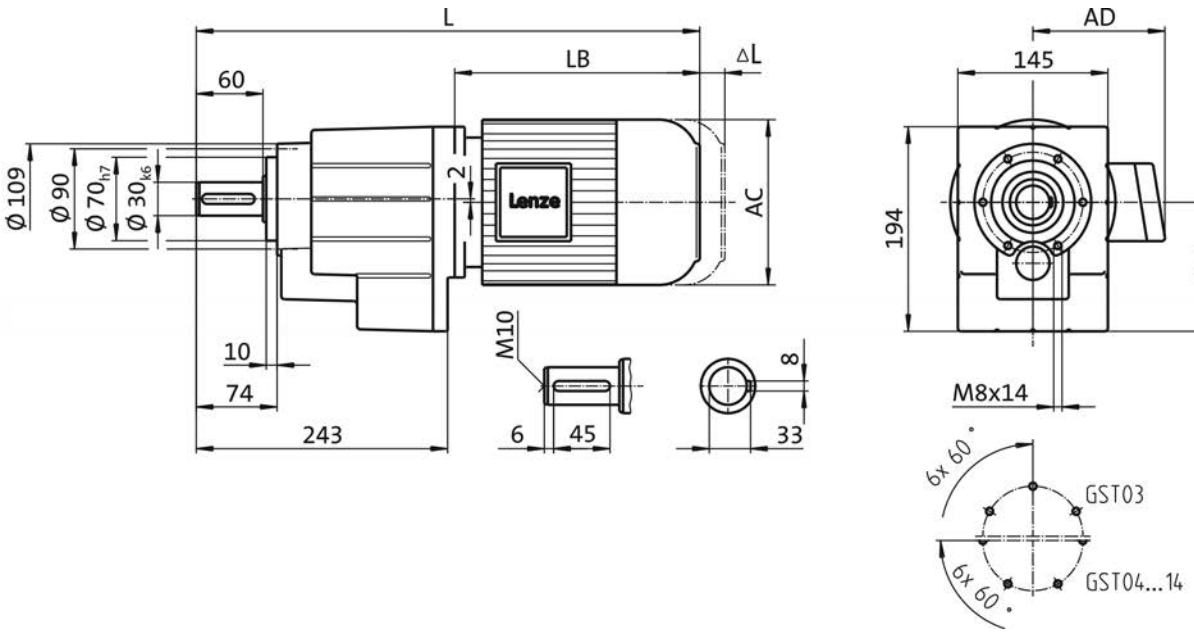

Product			m200	
			-P132L4	-P132M4
Dimensions				
Total length	**L**	**[mm]**	669	
Motor length	**LB**	**[mm]**	400	
Length of motor options	**Δ L**	**[mm]**	118	
Motor diameter	**AC**	**[mm]**	281	
Distance motor/connection	**AD**	**[mm]**	182	



Dimensions, 4-pole motors

GST06, 2-stage gearboxes

Dimensions with solid shaft and flange (VCK)

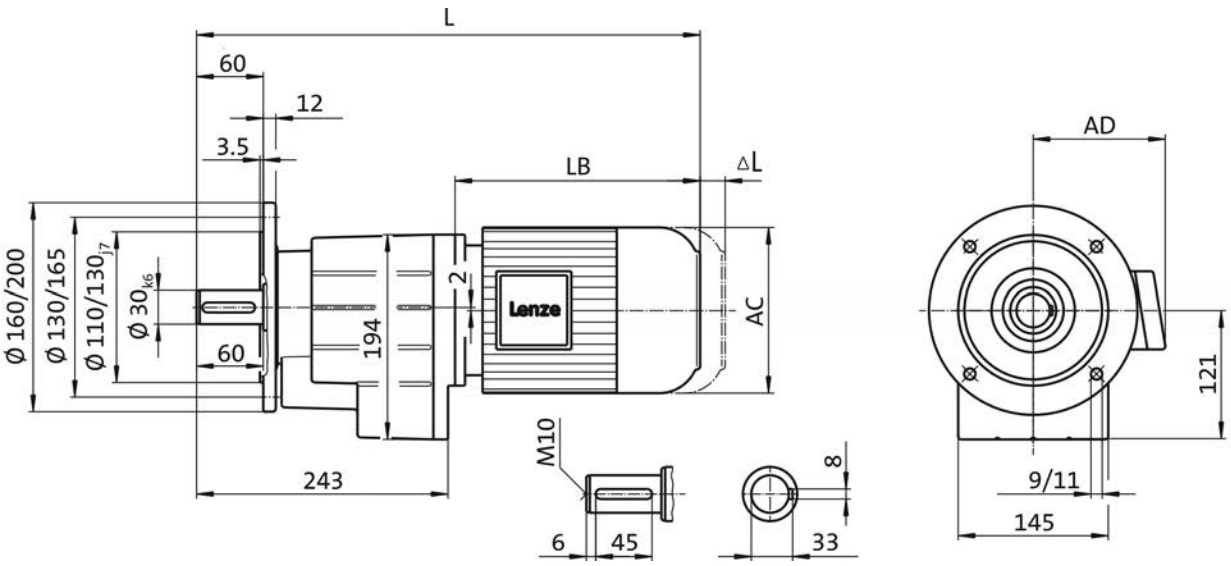

Product			m200	
			-P132L4	-P132M4
Dimensions				
Total length	**L**	**[mm]**	669	
Motor length	**LB**	**[mm]**	400	
Length of motor options	**Δ L**	**[mm]**	118	
Motor diameter	**AC**	**[mm]**	281	
Distance motor/connection	**AD**	**[mm]**	182	



Dimensions, 4-pole motors

GST07, 1-stage gearboxes

Dimensions with solid shaft and foot (VBR)

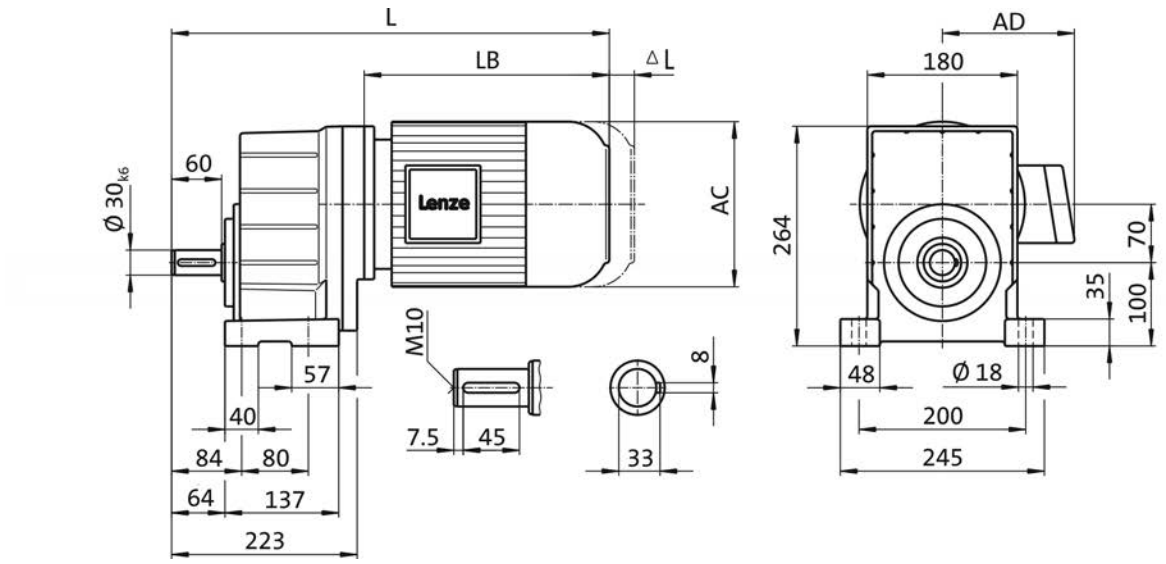

Product			m200	
			-P132L4	-P132M4
Dimensions				
Total length	**L**	**[mm]**	646	
Motor length	**LB**	**[mm]**	400	
Length of motor options	**Δ L**	**[mm]**	118	
Motor diameter	**AC**	**[mm]**	281	
Distance motor/connection	**AD**	**[mm]**	182	



Dimensions, 4-pole motors

GST07, 1-stage gearboxes

Dimensions with solid shaft and centering (VCR)

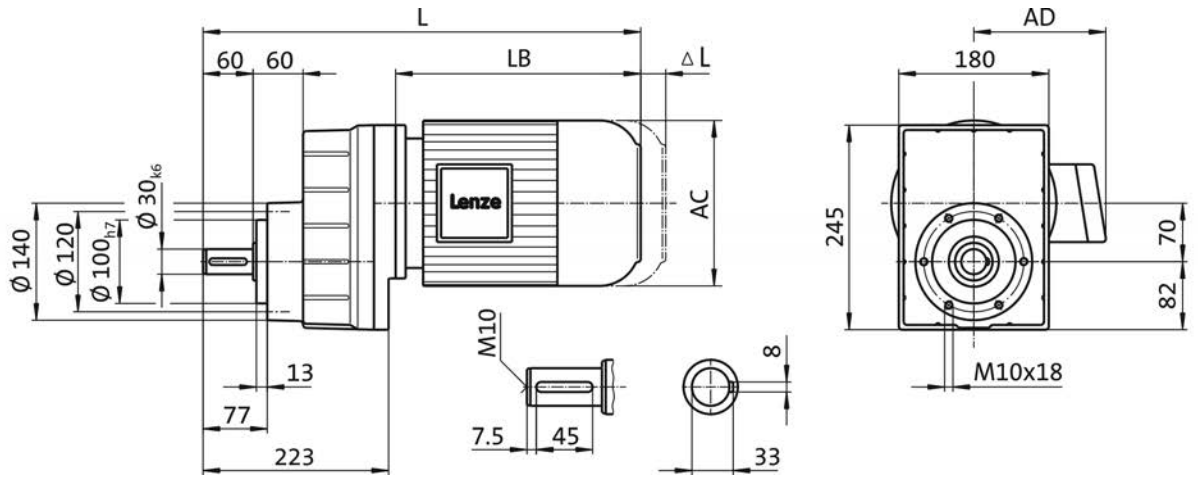

Product			m200	
			-P132L4	-P132M4
Dimensions				
Total length	**L**	**[mm]**	646	
Motor length	**LB**	**[mm]**	400	
Length of motor options	**Δ L**	**[mm]**	118	
Motor diameter	**AC**	**[mm]**	281	
Distance motor/connection	**AD**	**[mm]**	182	



Dimensions, 4-pole motors

GST07, 1-stage gearboxes

Dimensions with solid shaft and flange (VCK)

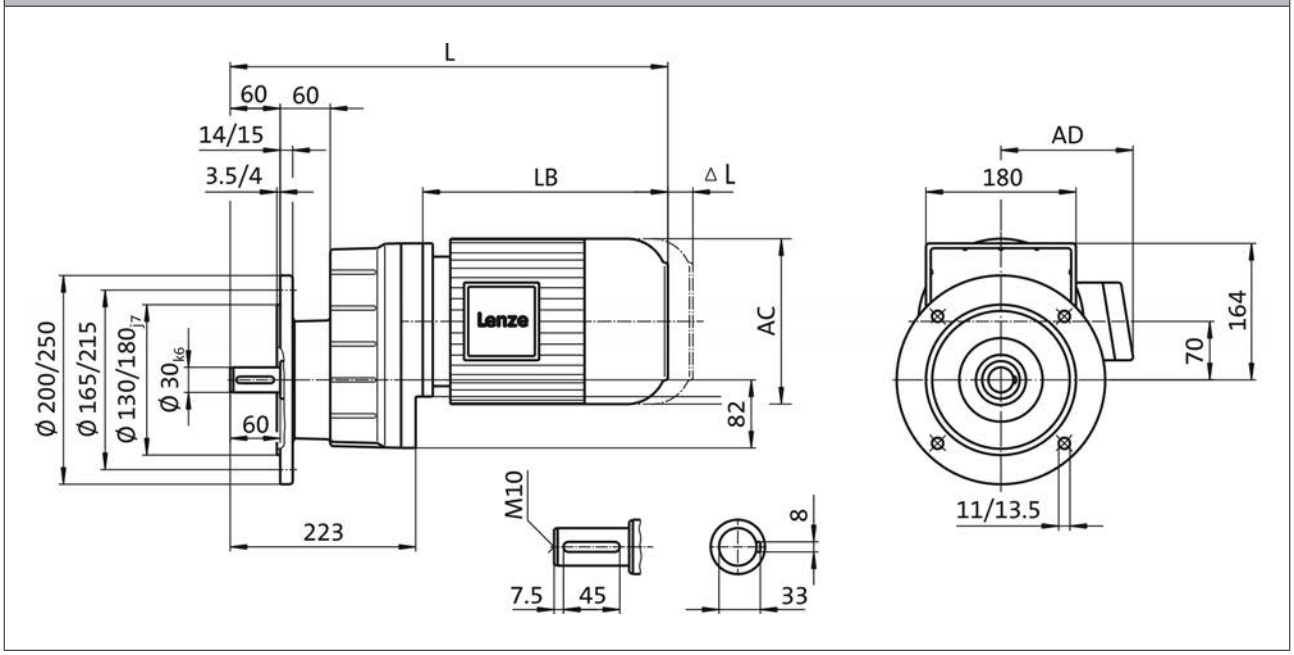

Product			m200	
			-P132L4	-P132M4
Dimensions				
Total length	**L**	**[mm]**	646	
Motor length	**LB**	**[mm]**	400	
Length of motor options	**Δ L**	**[mm]**	118	
Motor diameter	**AC**	**[mm]**	281	
Distance motor/connection	**AD**	**[mm]**	182	



Dimensions, 4-pole motors

GST07, 2-stage gearboxes

Dimensions with solid shaft and foot (VBR)

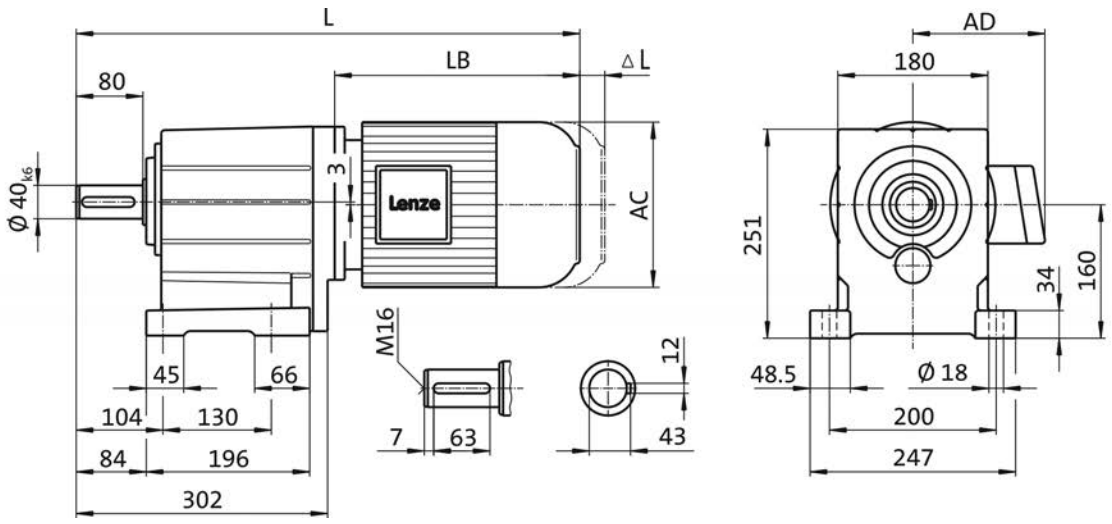

Product			m200		
			-P132L4	-P132M4	-P160M4
Dimensions					
Total length	**L**	**[mm]**	725		831
Motor length	**LB**	**[mm]**	400		501
Length of motor options	**Δ L**	**[mm]**	118		144
Motor diameter	**AC**	**[mm]**	281		302
Distance motor/connection	**AD**	**[mm]**	182		231



Dimensions, 4-pole motors

GST07, 2-stage gearboxes

Dimensions with solid shaft and centering (VCR)

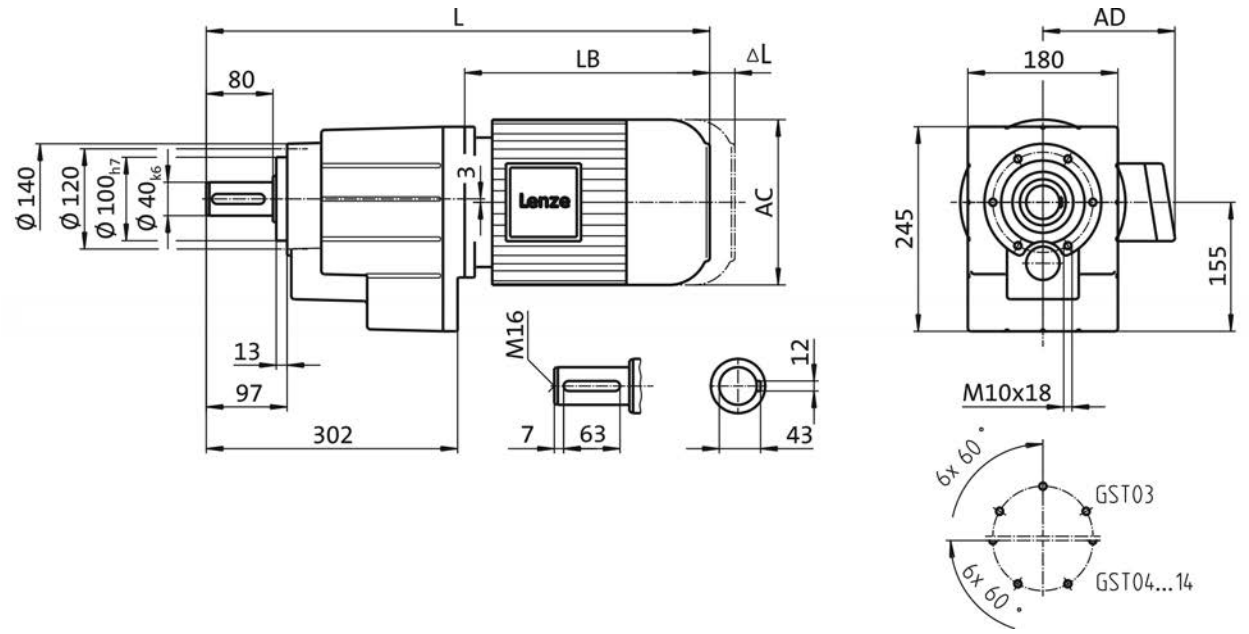

Product			m200		
			-P132L4	-P132M4	-P160M4
Dimensions					
Total length	**L**	**[mm]**	725		831
Motor length	**LB**	**[mm]**	400		501
Length of motor options	**Δ L**	**[mm]**	118		144
Motor diameter	**AC**	**[mm]**	281		302
Distance motor/connection	**AD**	**[mm]**	182		231



Dimensions, 4-pole motors

GST07, 2-stage gearboxes

Dimensions with solid shaft and flange (VCK)

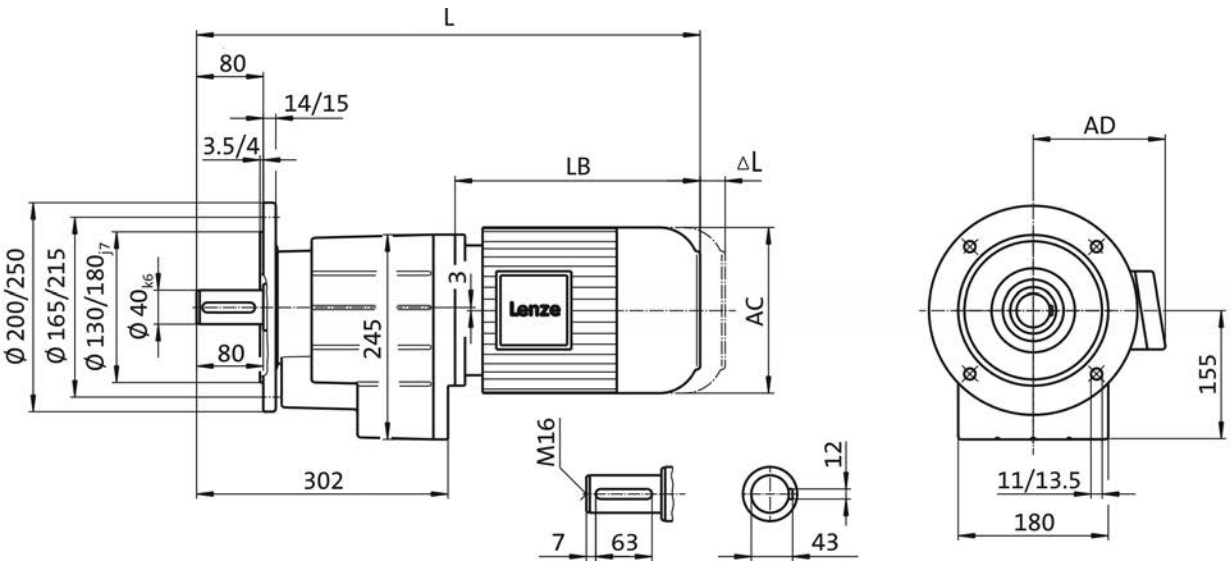

Product			m200		
			-P132L4	-P132M4	-P160M4
Dimensions					
Total length	**L**	**[mm]**	725		831
Motor length	**LB**	**[mm]**	400		501
Length of motor options	**Δ L**	**[mm]**	118		144
Motor diameter	**AC**	**[mm]**	281		302
Distance motor/connection	**AD**	**[mm]**	182		231



Dimensions, 4-pole motors

GST09, 1-stage gearboxes

Dimensions with solid shaft and foot (VBR)

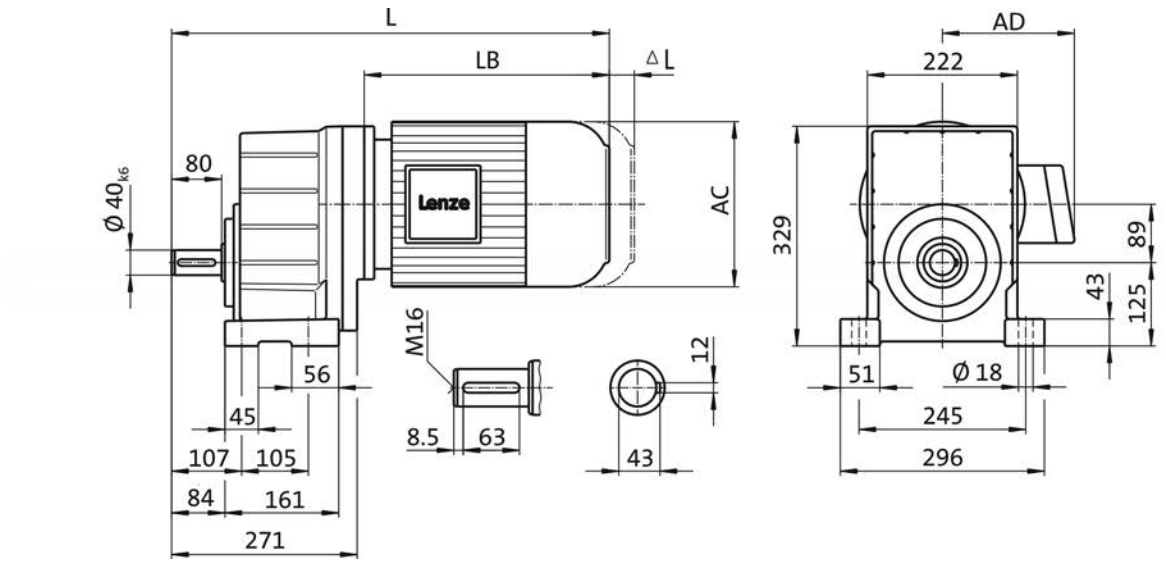

Product			m200					
			-P132L4	-P132M4	-P160L4	-P160M4	-P180L4	-P180M4
Dimensions								
Total length	**L**	**[mm]**	689		795		889	
Motor length	**LB**	**[mm]**	400		501		595	
Length of motor options	**Δ L**	**[mm]**	118		144		108	
Motor diameter	**AC**	**[mm]**	281		302		281	
Distance motor/connection	**AD**	**[mm]**	182		231		282	



Dimensions, 4-pole motors

GST09, 1-stage gearboxes

Dimensions with solid shaft and centering (VCR)

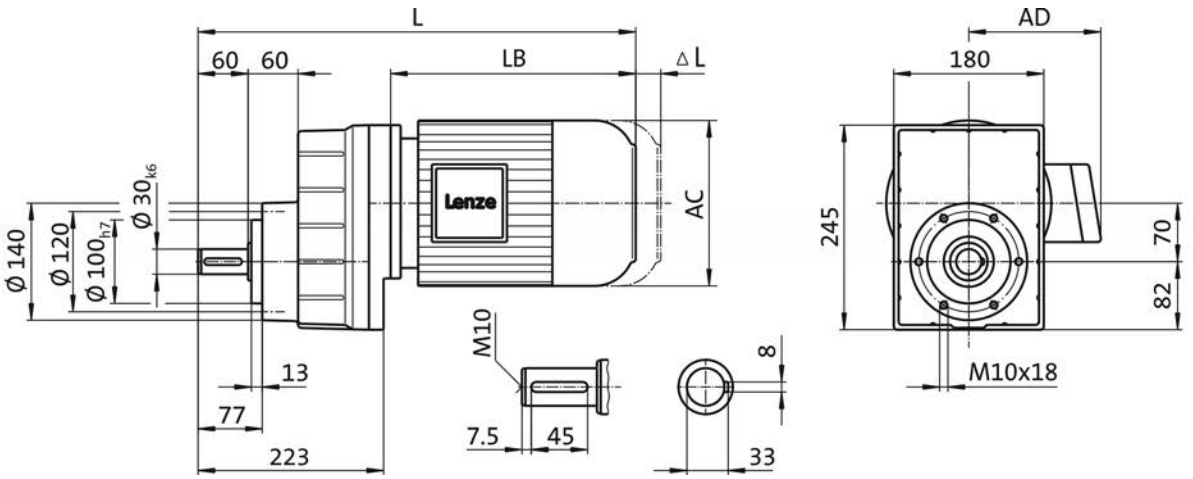

Product			m200					
			-P132L4	-P132M4	-P160L4	-P160M4	-P180L4	-P180M4
Dimensions								
Total length	**L**	**[mm]**	689		795		889	
Motor length	**LB**	**[mm]**	400		501		595	
Length of motor options	**Δ L**	**[mm]**	118		144		108	
Motor diameter	**AC**	**[mm]**	281		302		281	
Distance motor/connection	**AD**	**[mm]**	182		231		282	



Dimensions, 4-pole motors

GST09, 1-stage gearboxes

Dimensions with solid shaft and flange (VCK)

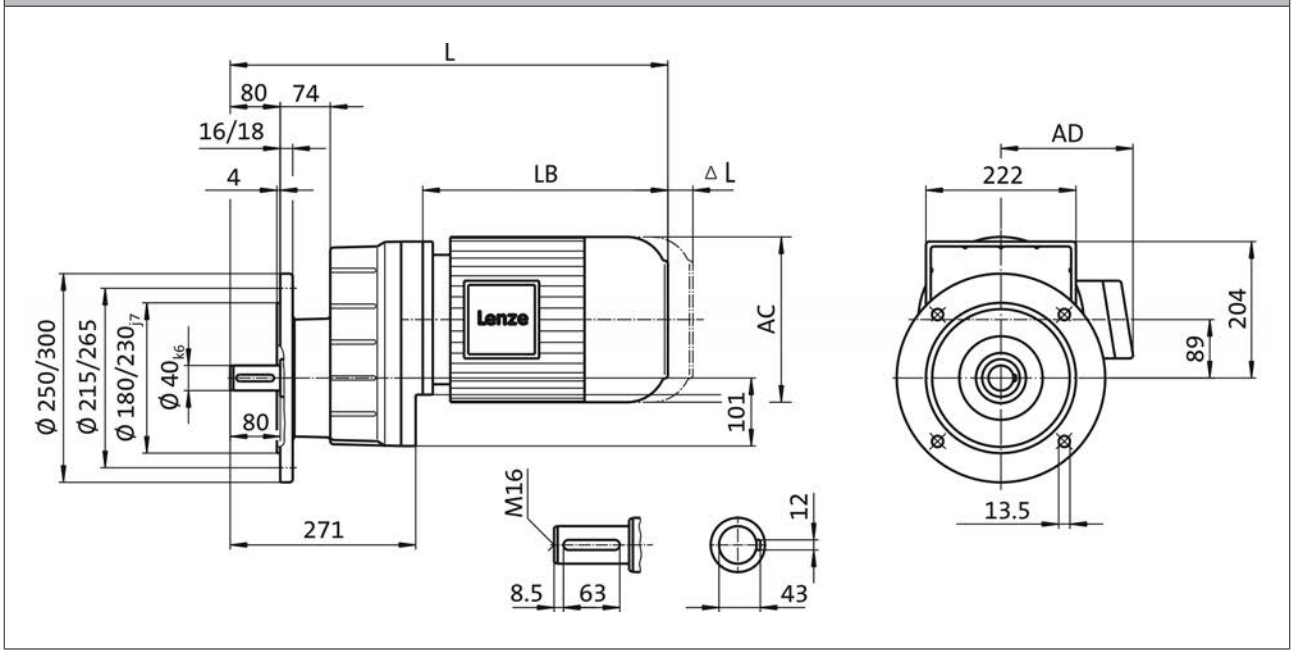

Product			m200					
			-P132L4	-P132M4	-P160L4	-P160M4	-P180L4	-P180M4
Dimensions								
Total length	**L**	**[mm]**	689		795		889	
Motor length	**LB**	**[mm]**	400		501		595	
Length of motor options	**Δ L**	**[mm]**	118		144		108	
Motor diameter	**AC**	**[mm]**	281		302		281	
Distance motor/connection	**AD**	**[mm]**	182		231		282	



Dimensions, 4-pole motors

GST09, 2-stage gearboxes

Dimensions with solid shaft and foot (VBR)

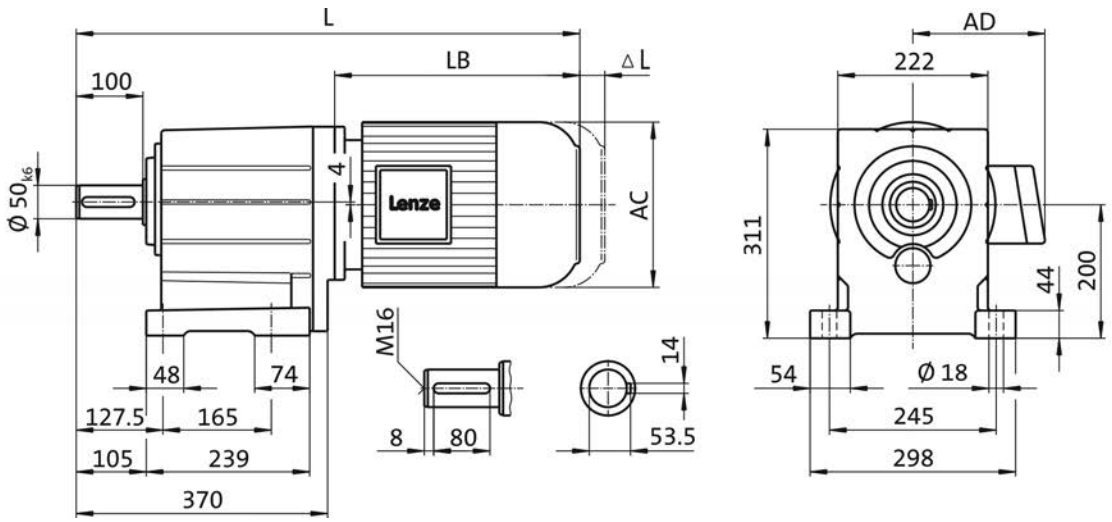

Product			m200					
			-P132L4	-P132M4	-P160L4	-P160M4	-P180L4	-P180M4
Dimensions								
Total length	**L**	**[mm]**	788		894		988	
Motor length	**LB**	**[mm]**	400		501		595	
Length of motor options	**Δ L**	**[mm]**	118		144		108	
Motor diameter	**AC**	**[mm]**	281		302		281	
Distance motor/connection	**AD**	**[mm]**	182		231		282	



Dimensions, 4-pole motors

GST09, 2-stage gearboxes

Dimensions with solid shaft and centering (VCR)

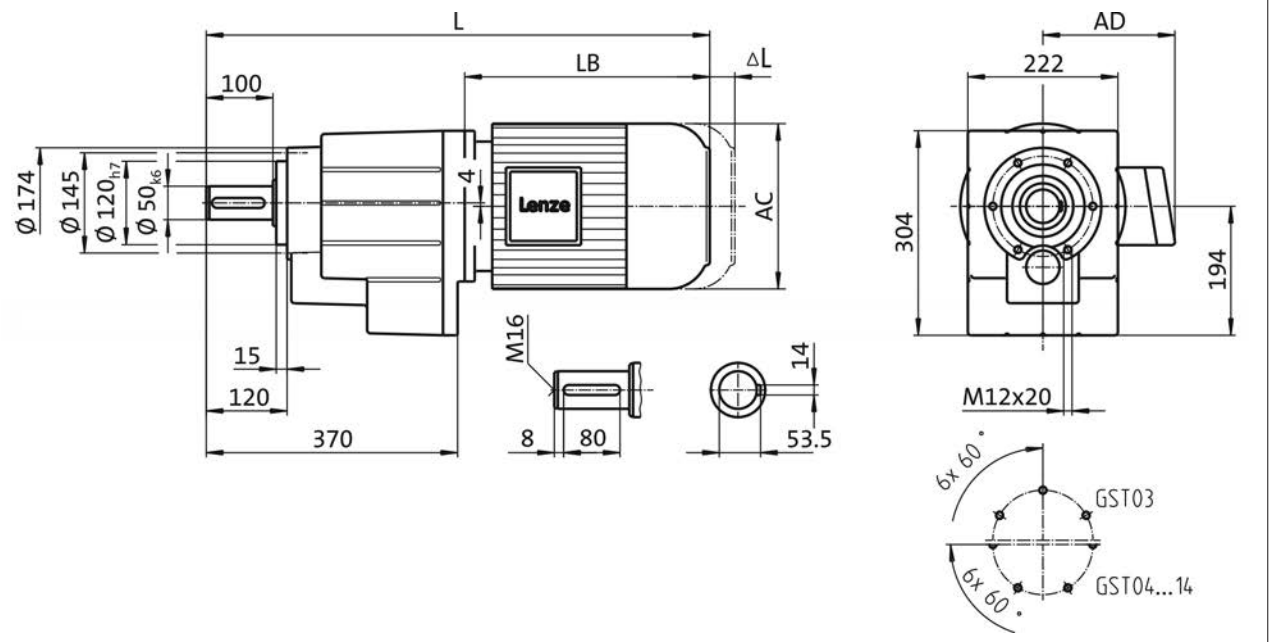

Product			m200					
			-P132L4	-P132M4	-P160L4	-P160M4	-P180L4	-P180M4
Dimensions								
Total length	**L**	**[mm]**	788		894		988	
Motor length	**LB**	**[mm]**	400		501		595	
Length of motor options	**Δ L**	**[mm]**	118		144		108	
Motor diameter	**AC**	**[mm]**	281		302		281	
Distance motor/connection	**AD**	**[mm]**	182		231		282	



Dimensions, 4-pole motors

GST09, 2-stage gearboxes

Dimensions with solid shaft and flange (VCK)

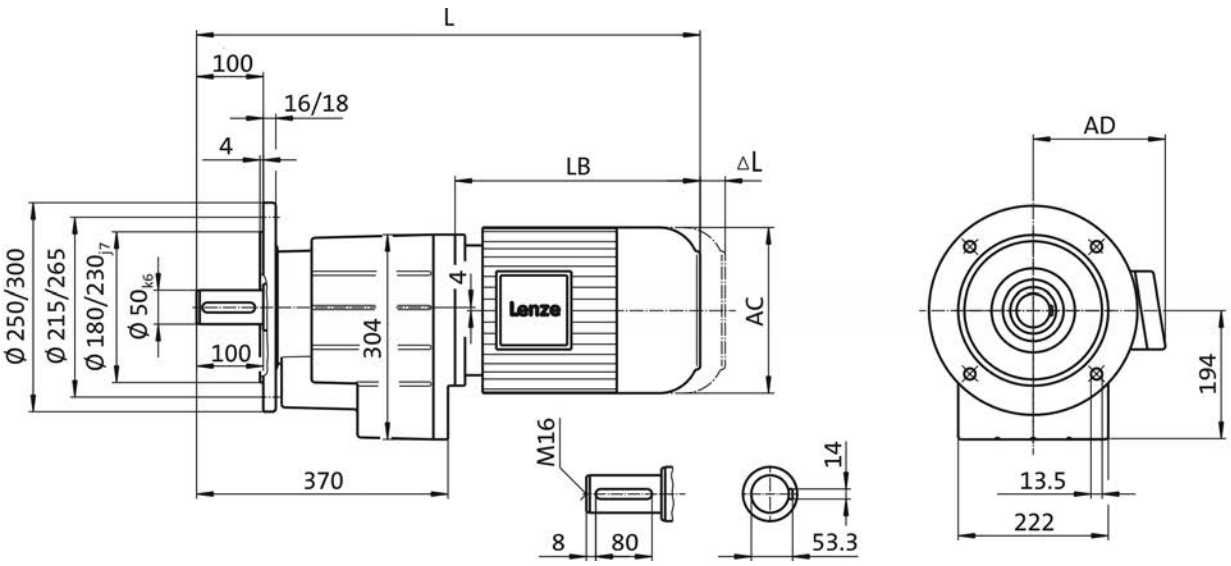

Product			m200					
			-P132L4	-P132M4	-P160L4	-P160M4	-P180L4	-P180M4
Dimensions								
Total length	**L**	**[mm]**	788		894		988	
Motor length	**LB**	**[mm]**	400		501		595	
Length of motor options	**Δ L**	**[mm]**	118		144		108	
Motor diameter	**AC**	**[mm]**	281		302		281	
Distance motor/connection	**AD**	**[mm]**	182		231		282	



Dimensions, 4-pole motors

GST09, 3-stage gearboxes

Dimensions with solid shaft and foot (VBR)

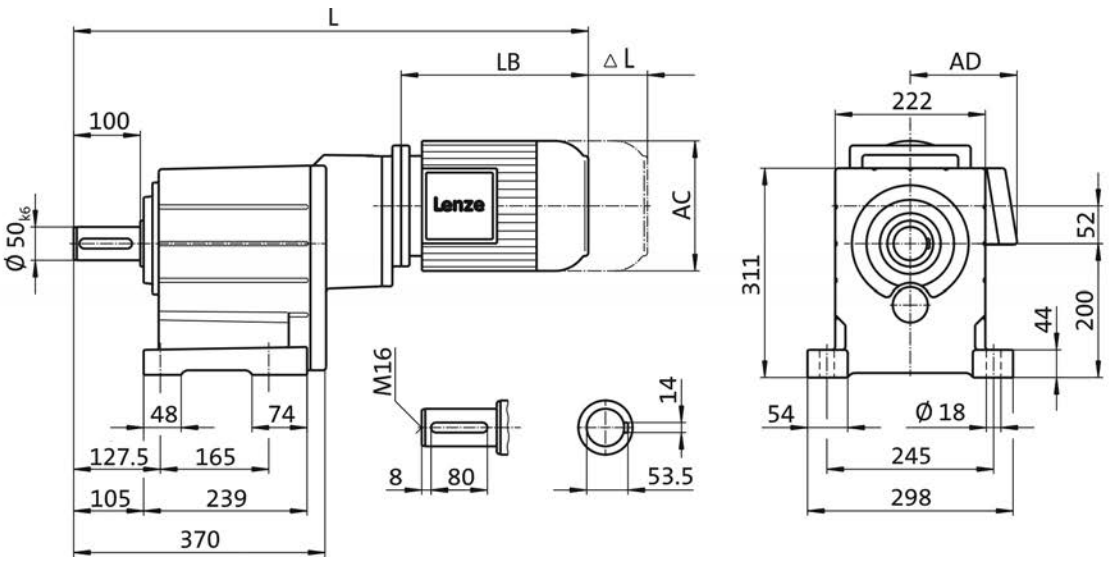

Product			m200
			-P132M4
Dimensions			
Total length	**L**	**[mm]**	910
Motor length	**LB**	**[mm]**	400
Length of motor options	**Δ L**	**[mm]**	118
Motor diameter	**AC**	**[mm]**	281
Distance motor/connection	**AD**	**[mm]**	182



Dimensions, 4-pole motors

GST09, 3-stage gearboxes

Dimensions with solid shaft and centering (VCR)

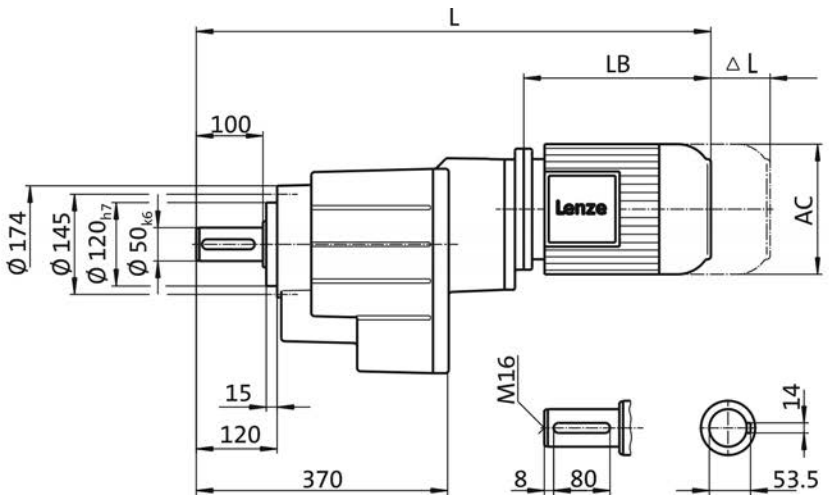

Product			m200
			-P132M4
Dimensions			
Total length	**L**	**[mm]**	910
Motor length	**LB**	**[mm]**	400
Length of motor options	**Δ L**	**[mm]**	118
Motor diameter	**AC**	**[mm]**	281
Distance motor/connection	**AD**	**[mm]**	182



Dimensions, 4-pole motors

GST09, 3-stage gearboxes

Dimensions with solid shaft and flange (VCK)

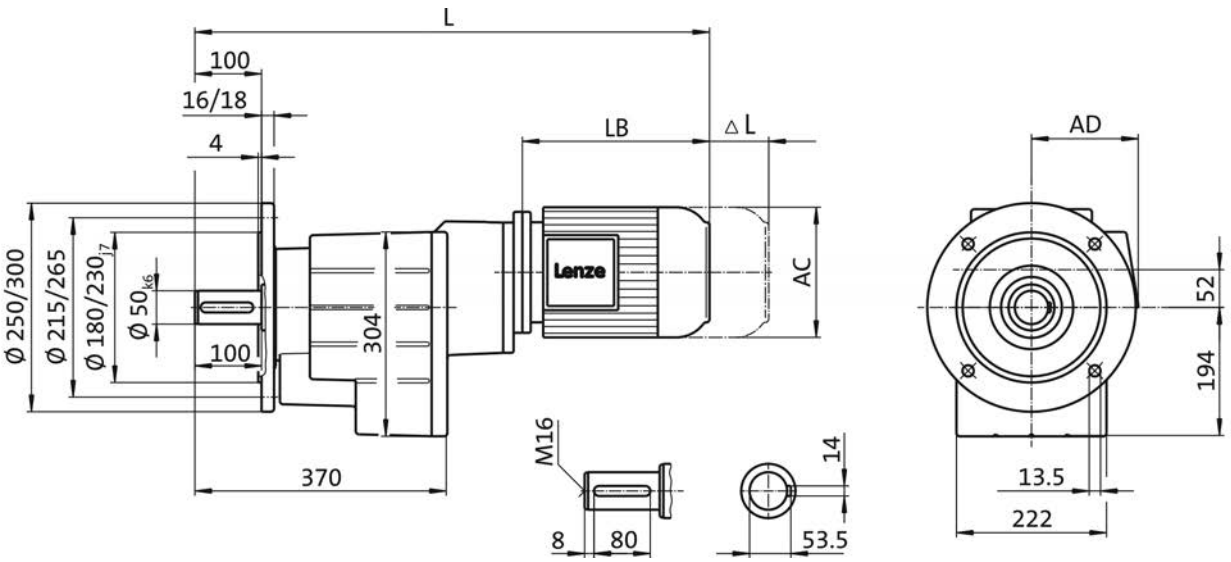

Product			m200
			-P132M4
Dimensions			
Total length	**L**	**[mm]**	910
Motor length	**LB**	**[mm]**	400
Length of motor options	**Δ L**	**[mm]**	118
Motor diameter	**AC**	**[mm]**	281
Distance motor/connection	**AD**	**[mm]**	182



Dimensions, 4-pole motors

GST11, 2-stage gearboxes

Dimensions with solid shaft and foot (VBR)

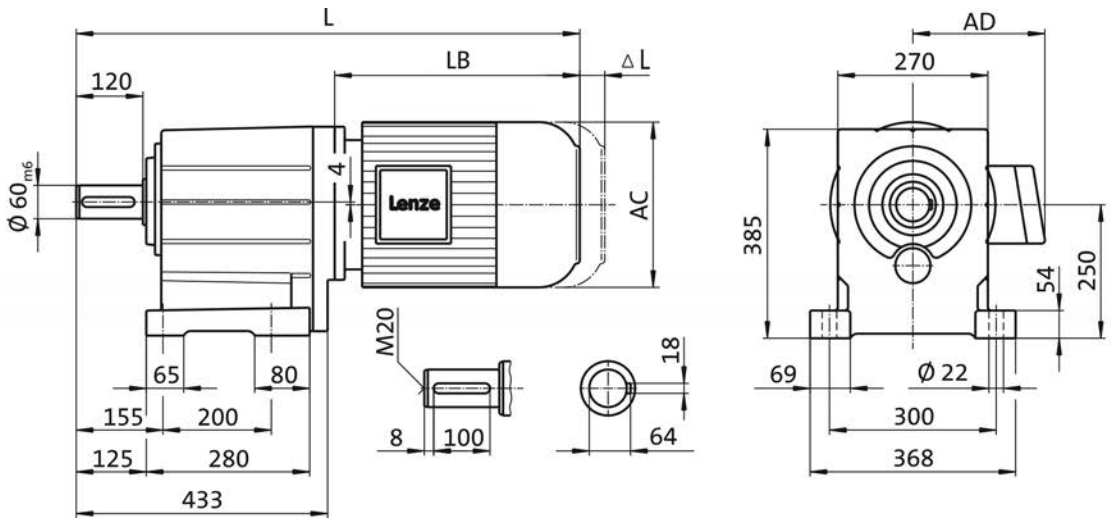

Product			m200					
			-P132L4	-P132M4	-P160L4	-P160M4	-P180L4	-P180M4
Dimensions								
Total length	**L**	**[mm]**	845		951		1045	
Motor length	**LB**	**[mm]**	400		501		595	
Length of motor options	**Δ L**	**[mm]**	118		144		108	
Motor diameter	**AC**	**[mm]**	281		302		281	
Distance motor/connection	**AD**	**[mm]**	182		231		282	



Dimensions, 4-pole motors

GST11, 2-stage gearboxes

Dimensions with solid shaft and centering (VCR)

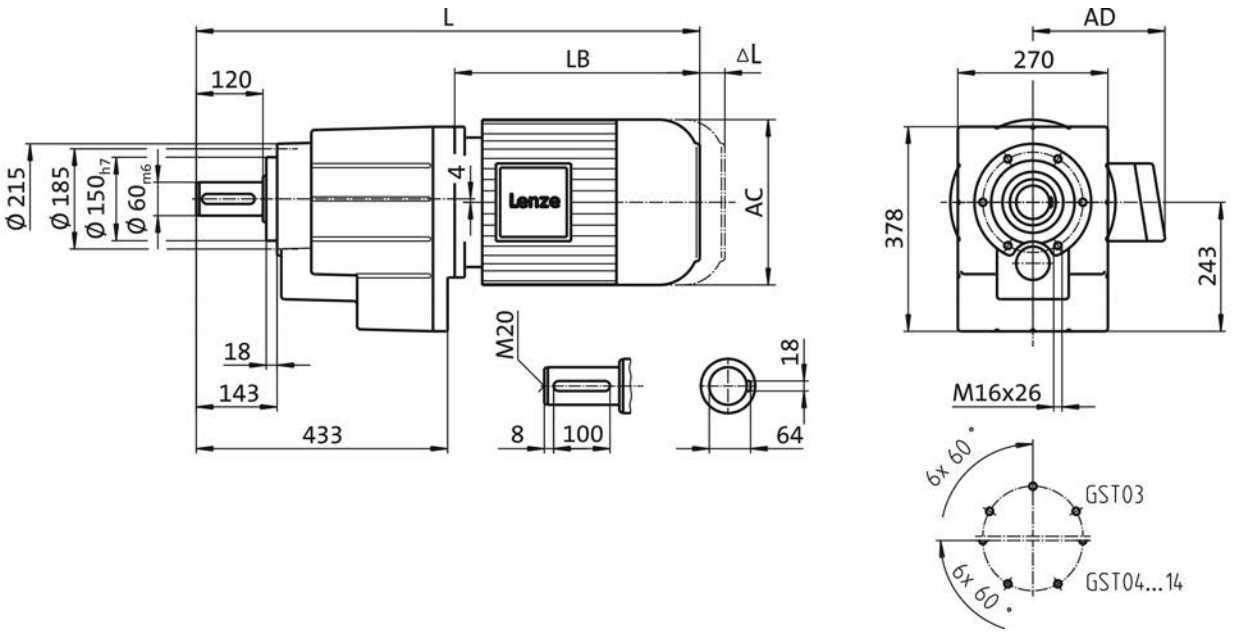

Product			m200					
			-P132L4	-P132M4	-P160L4	-P160M4	-P180L4	-P180M4
Dimensions								
Total length	**L**	**[mm]**	845		951		1045	
Motor length	**LB**	**[mm]**	400		501		595	
Length of motor options	**Δ L**	**[mm]**	118		144		108	
Motor diameter	**AC**	**[mm]**	281		302		281	
Distance motor/connection	**AD**	**[mm]**	182		231		282	



Dimensions, 4-pole motors

GST11, 2-stage gearboxes

Dimensions with solid shaft and flange (VCK)

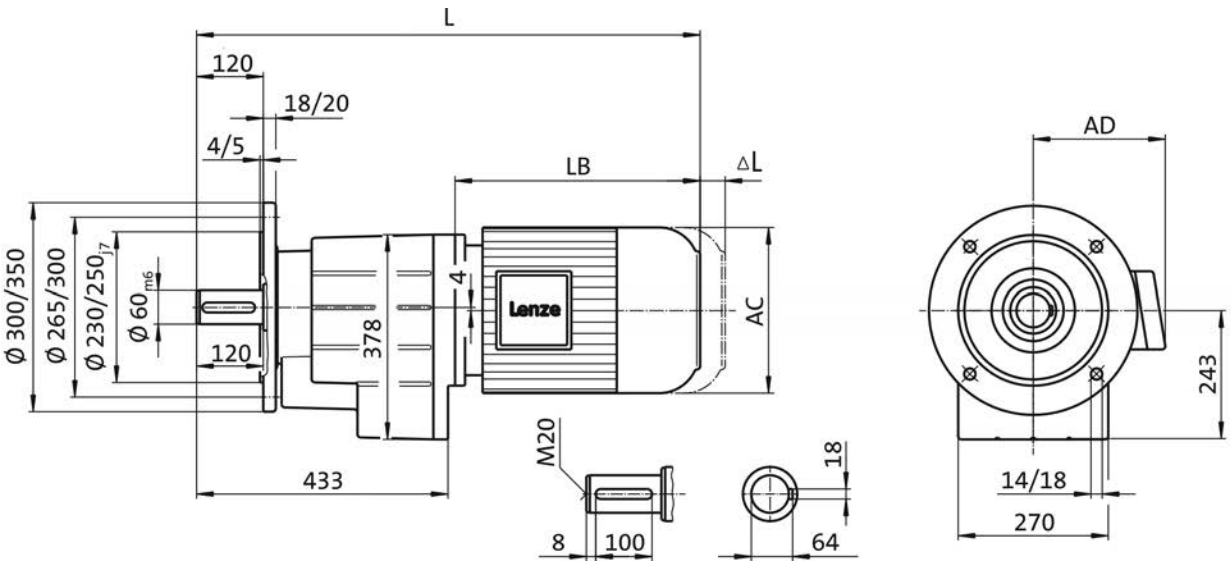

Product			m200					
			-P132L4	-P132M4	-P160L4	-P160M4	-P180L4	-P180M4
Dimensions								
Total length	**L**	**[mm]**	845		951		1045	
Motor length	**LB**	**[mm]**	400		501		595	
Length of motor options	**Δ L**	**[mm]**	118		144		108	
Motor diameter	**AC**	**[mm]**	281		302		281	
Distance motor/connection	**AD**	**[mm]**	182		231		282	



Dimensions, 4-pole motors

GST11, 3-stage gearboxes

Dimensions with solid shaft and foot (VBR)

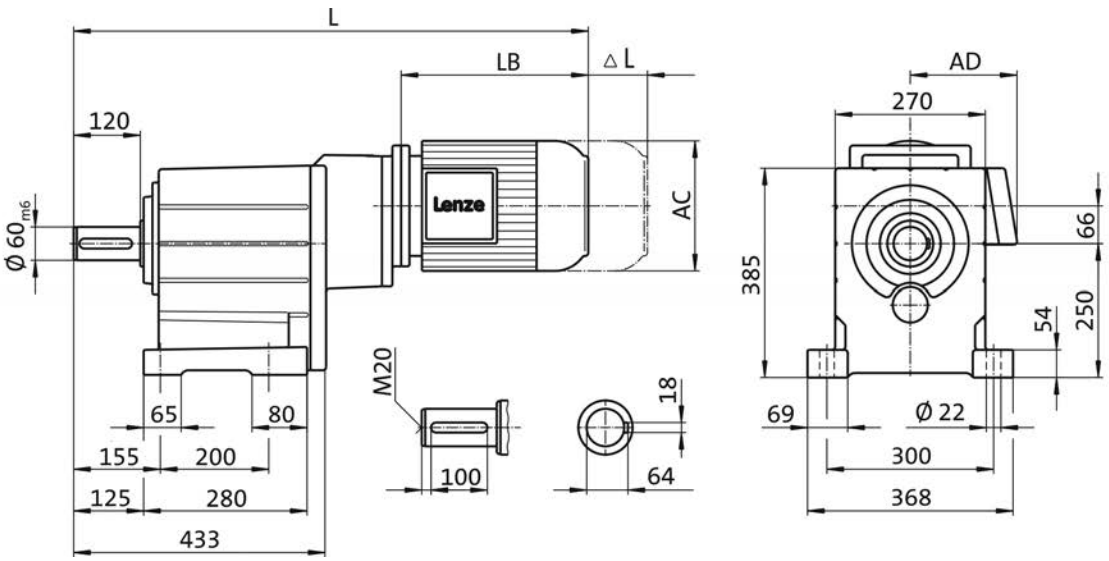

Product			m200	
			-P132L4	-P132M4
Dimensions				
Total length	**L**	**[mm]**	986	
Motor length	**LB**	**[mm]**	400	
Length of motor options	**Δ L**	**[mm]**	118	
Motor diameter	**AC**	**[mm]**	281	
Distance motor/connection	**AD**	**[mm]**	182	



Dimensions, 4-pole motors

GST11, 3-stage gearboxes

Dimensions with solid shaft and centering (VCR)

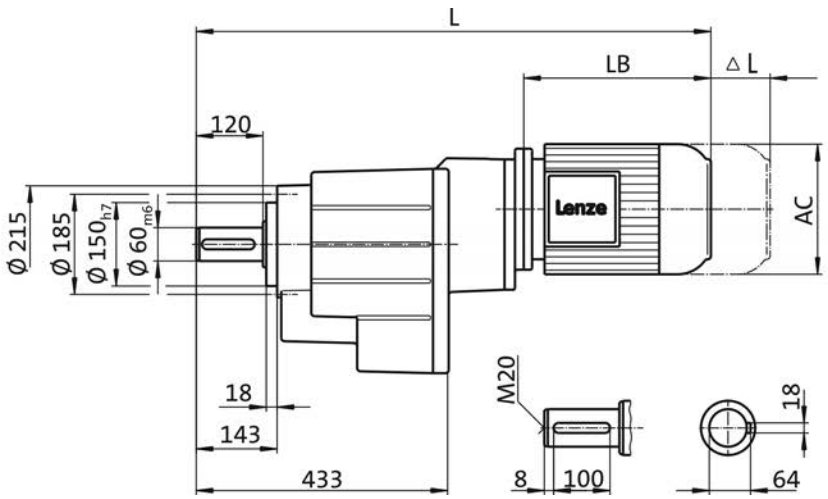

Product			m200	
			-P132L4	-P132M4
Dimensions				
Total length	**L**	**[mm]**	986	
Motor length	**LB**	**[mm]**	400	
Length of motor options	**Δ L**	**[mm]**	118	
Motor diameter	**AC**	**[mm]**	281	
Distance motor/connection	**AD**	**[mm]**	182	



Dimensions, 4-pole motors

GST11, 3-stage gearboxes

Dimensions with solid shaft and flange (VCK)

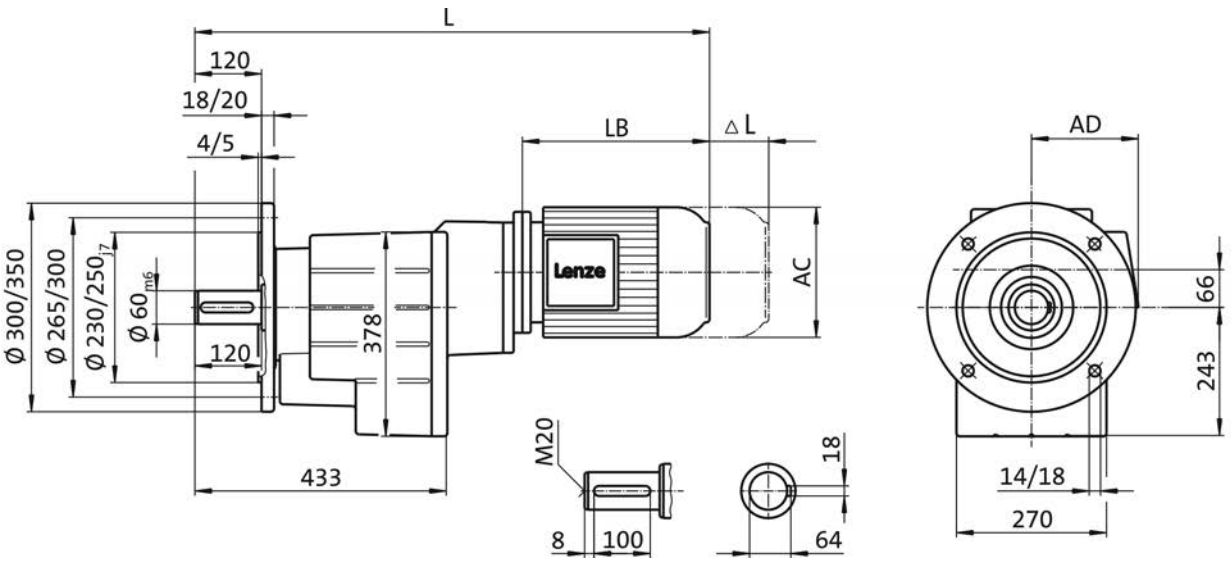

Product			m200	
			-P132L4	-P132M4
Dimensions				
Total length	**L**	**[mm]**	986	
Motor length	**LB**	**[mm]**	400	
Length of motor options	**Δ L**	**[mm]**	118	
Motor diameter	**AC**	**[mm]**	281	
Distance motor/connection	**AD**	**[mm]**	182	



Dimensions, 4-pole motors

GST14, 2-stage gearboxes

Dimensions with solid shaft and foot (VBR)

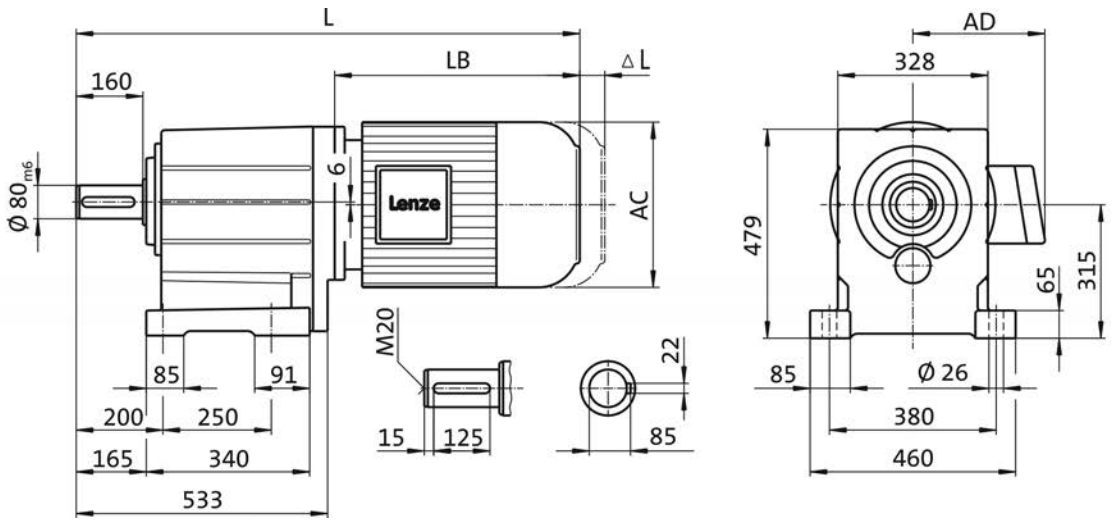

Product			m200							
			-P132L4	-P132M4	-P160L4	-P160M4	-P180L4	-P180M4	-P180V4	-P225M4
Dimensions										
Total length	**L**	**[mm]**	935		1041		1135		1188	1220
Motor length	**LB**	**[mm]**	400		501		595		648	680
Length of motor options	**Δ L**	**[mm]**	118		144		108			202
Motor diameter	**AC**	**[mm]**	281		302		281			456
Distance motor/connection	**AD**	**[mm]**	182		231		282			330



Dimensions, 4-pole motors

GST14, 2-stage gearboxes

Dimensions with solid shaft and centering (VCR)

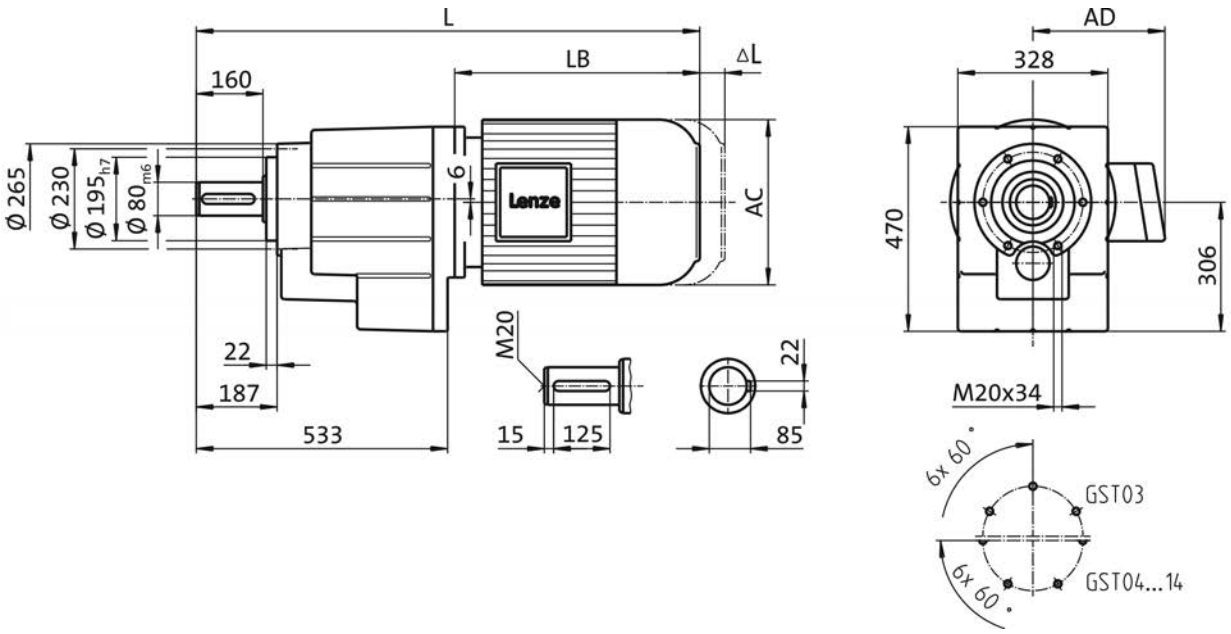

Product			m200							
			-P132L4	-P132M4	-P160L4	-P160M4	-P180L4	-P180M4	-P180V4	-P225M4
Dimensions										
Total length	**L**	**[mm]**	935		1041		1135		1188	1220
Motor length	**LB**	**[mm]**	400		501		595		648	680
Length of motor options	**Δ L**	**[mm]**	118		144		108			202
Motor diameter	**AC**	**[mm]**	281		302		281			456
Distance motor/connection	**AD**	**[mm]**	182		231		282			330



Dimensions, 4-pole motors

GST14, 2-stage gearboxes

Dimensions with solid shaft and flange (VCK)

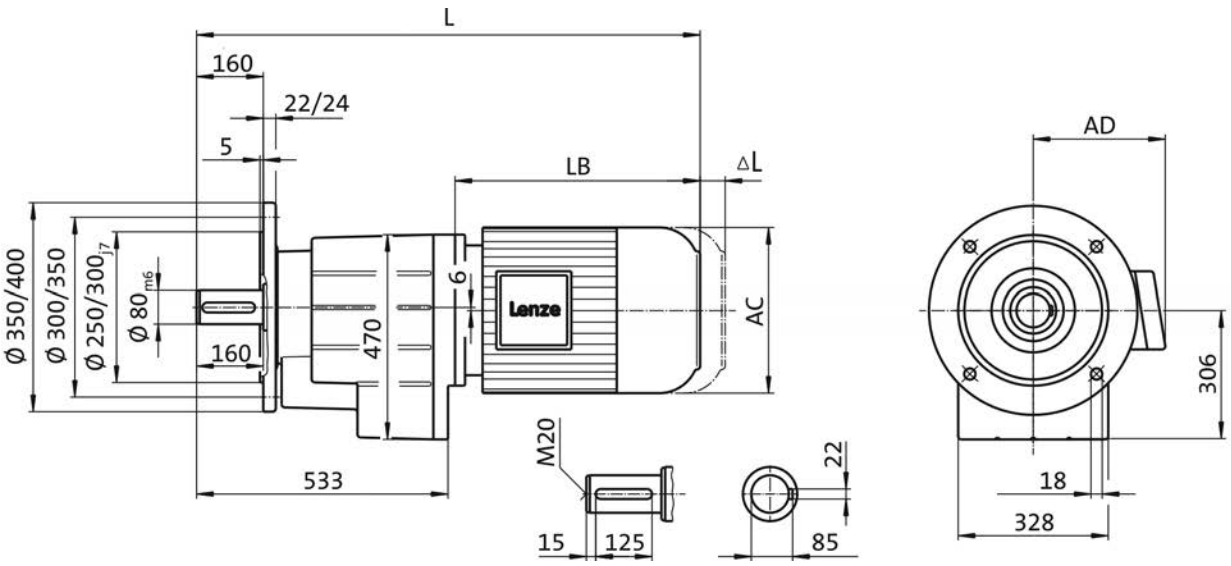

Product			m200							
			-P132L4	-P132M4	-P160L4	-P160M4	-P180L4	-P180M4	-P180V4	-P225M4
Dimensions										
Total length	**L**	**[mm]**	935		1041		1135		1188	1220
Motor length	**LB**	**[mm]**	400		501		595		648	680
Length of motor options	**Δ L**	**[mm]**	118		144		108			202
Motor diameter	**AC**	**[mm]**	281		302		281			456
Distance motor/connection	**AD**	**[mm]**	182		231		282			330



Dimensions, 4-pole motors

GST14, 3-stage gearboxes

Dimensions with solid shaft and foot (VBR)

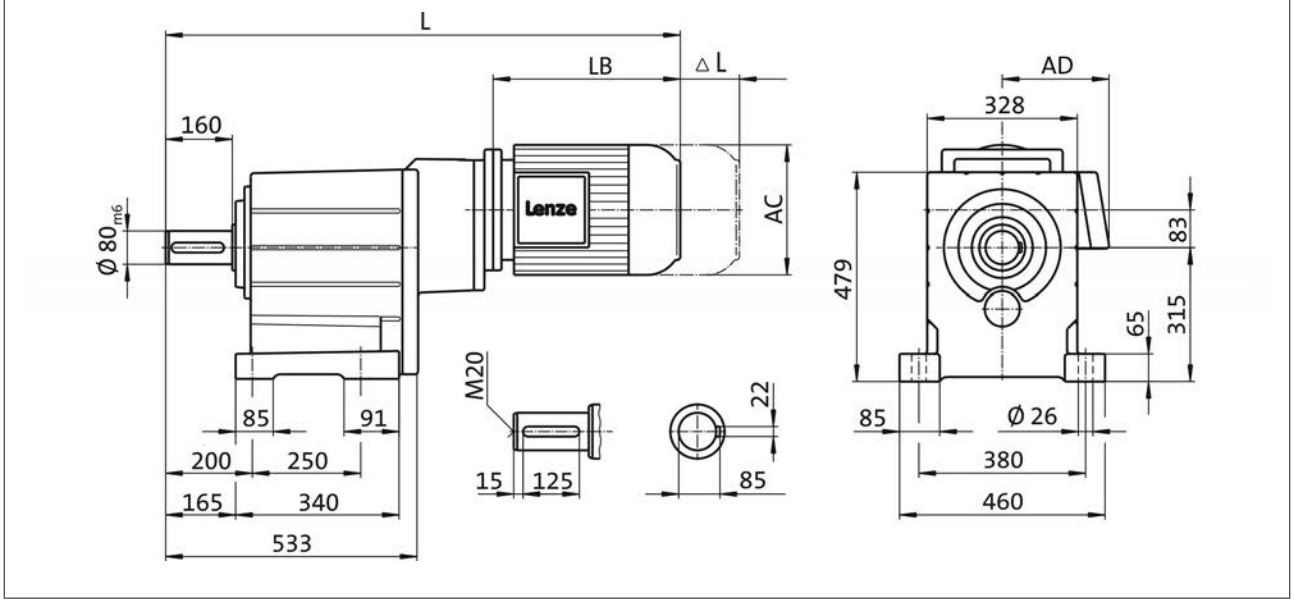

Product			m200					
			-P132L4	-P132M4	-P160L4	-P160M4	-P180L4	-P180M4
Dimensions								
Total length	**L**	**[mm]**	1110		1216		1310	
Motor length	**LB**	**[mm]**	400		501		595	
Length of motor options	**Δ L**	**[mm]**	118		144		108	
Motor diameter	**AC**	**[mm]**	281		302		281	
Distance motor/connection	**AD**	**[mm]**	182		231		282	



Dimensions, 4-pole motors

GST14, 3-stage gearboxes

Dimensions with solid shaft and centering (VCR)

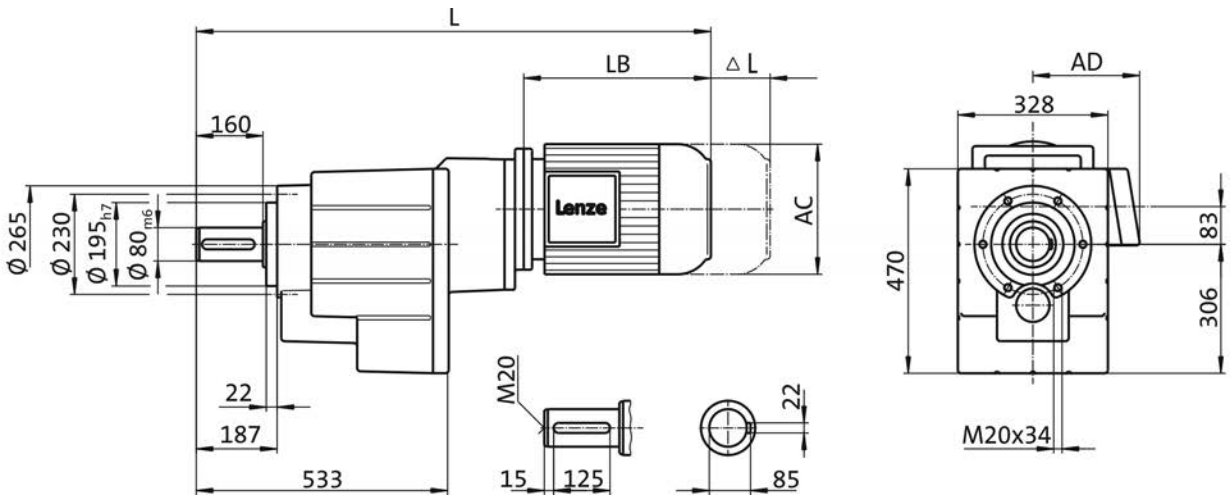

Product			m200					
			-P132L4	-P132M4	-P160L4	-P160M4	-P180L4	-P180M4
Dimensions								
Total length	**L**	**[mm]**	1110		1216		1310	
Motor length	**LB**	**[mm]**	400		501		595	
Length of motor options	**Δ L**	**[mm]**	118		144		108	
Motor diameter	**AC**	**[mm]**	281		302		281	
Distance motor/connection	**AD**	**[mm]**	182		231		282	



Dimensions, 4-pole motors

GST14, 3-stage gearboxes

Dimensions with solid shaft and flange (VCK)

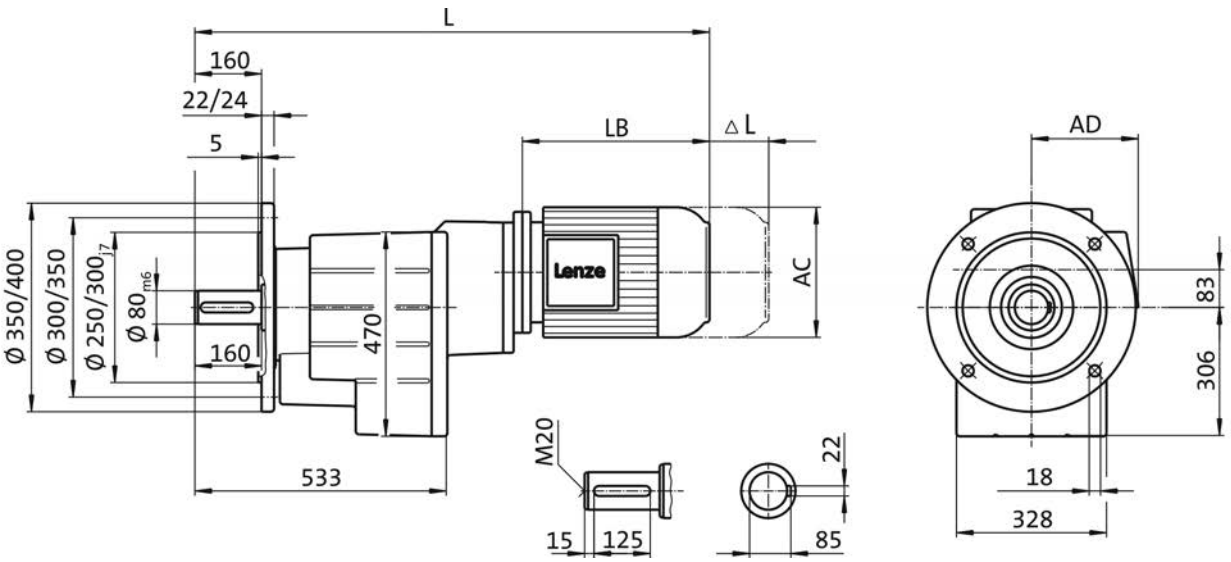

Product			m200					
			-P132L4	-P132M4	-P160L4	-P160M4	-P180L4	-P180M4
Dimensions								
Total length	**L**	**[mm]**	1110		1216		1310	
Motor length	**LB**	**[mm]**	400		501		595	
Length of motor options	**Δ L**	**[mm]**	118		144		108	
Motor diameter	**AC**	**[mm]**	281		302		281	
Distance motor/connection	**AD**	**[mm]**	182		231		282	





GST□□-2/3M VAR

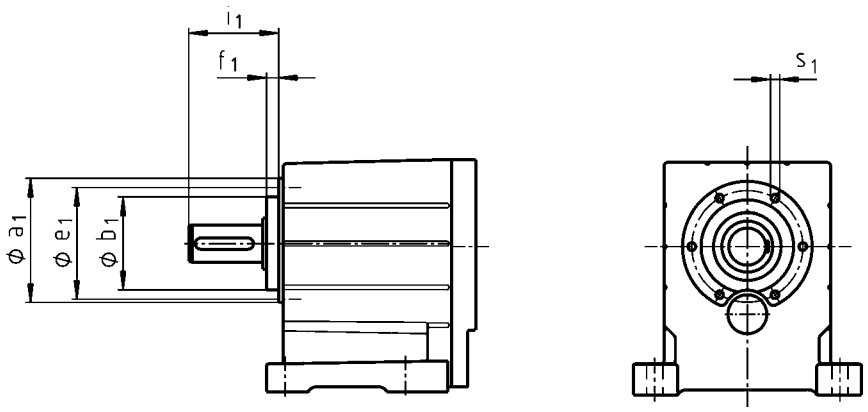

	a_1	b_1	e_1	f_1	i_1	s_1
		h7				
GST04	72	48	61	8.0	51.0	M5x10
GST05	88	58	74	9.0	62.0	M6x12
GST06	109	70	90	10.0	74.0	M8x14
GST07	140	100	120	13.0	97.0	M10x18
GST09	174	120	145	15.0	120.0	M12x20
GST11	215	150	185	18.0	143.0	M16x26
GST14	265	195	230	22.0	187.0	M20x34



GST□□-2/3M VAL

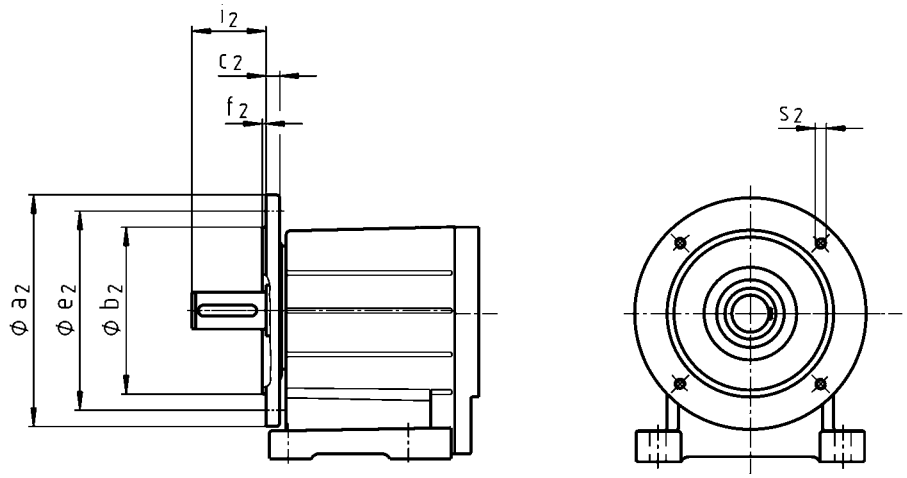

	a_2	b_2	c_2	e_2	f_2	i_2	s_2
		j7					
GST04	120 140	80 95	10 10	100 115	3.0 3.0	40	M6 M8
GST05	120 140 160	80 95 110	10 10 10	100 115 130	3.0 3.0 3.5	50	M6 M8 M8
GST06	160 200	110 130	12 12	130 165	3.5 3.5	60	M8 M10
GST07	200 250	130 180	14 15	165 215	3.5 4.0	80	M10 M12
GST09	250 300	180 230	16 18	215 265	4.0 4.0	100	M12 M12
GST11	300 350	230 250	18 20	265 300	4.0 5.0	120	M12 M16
GST14	350 400	250 300	22 24	300 350	5.0 5.0	160	M16 M16



Ventilations

Position of ventilation, sealing elements and oil level check

GST05...09-1

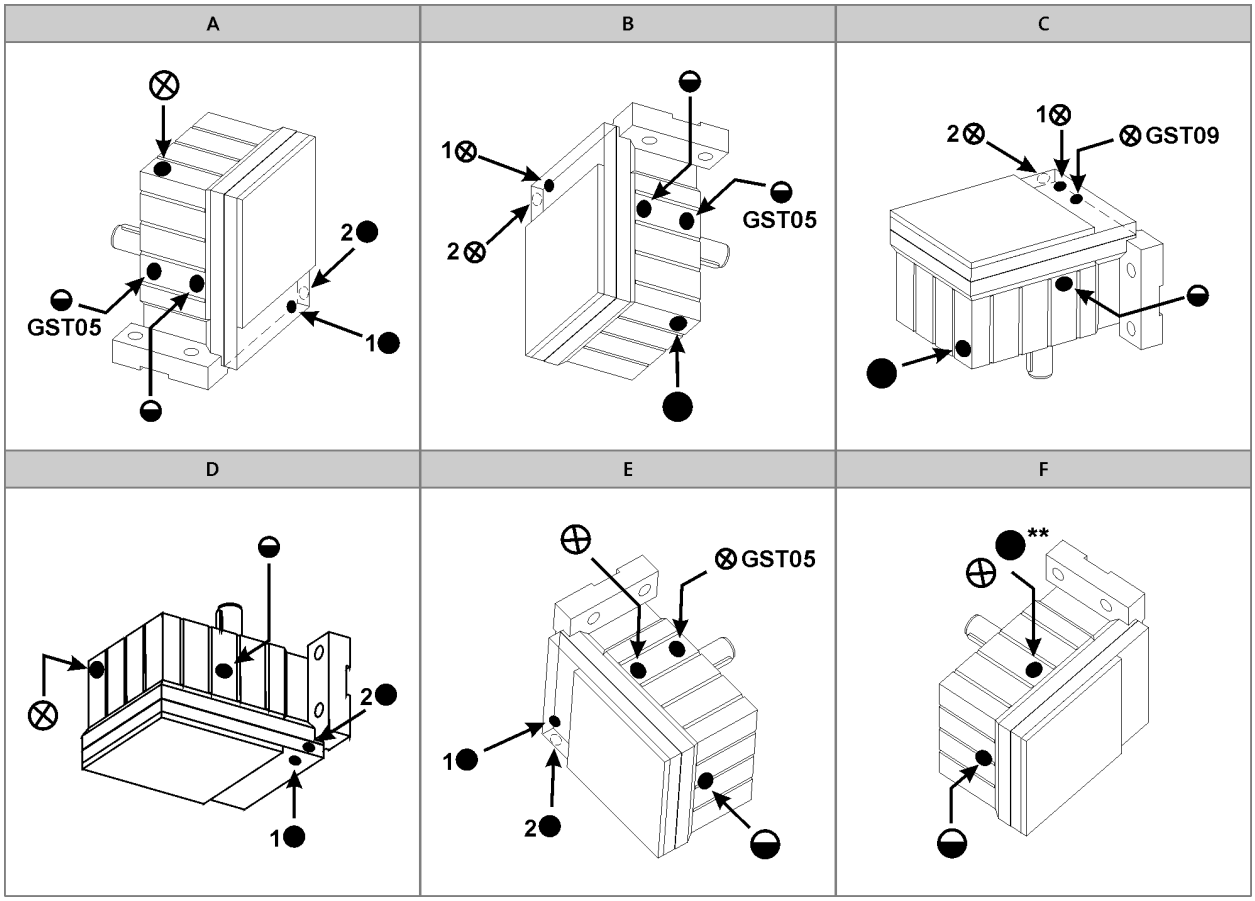

A to F Mounting position
⊗ Ventilation / Oil filler plug
● Oil drain plug
◒ Oil control plug
* On both sides
** On opposite side

Pos.1 standard
Pos.2 only for:
- GST05-1M V□□ 090□□□
- GST05-1M V□□ 100□□□
- GST06-1M V□□ 112□□□
- GST07-1M V□□ 160□□□



Ventilations

Position of ventilation, sealing elements and oil level check

GST05...14-2

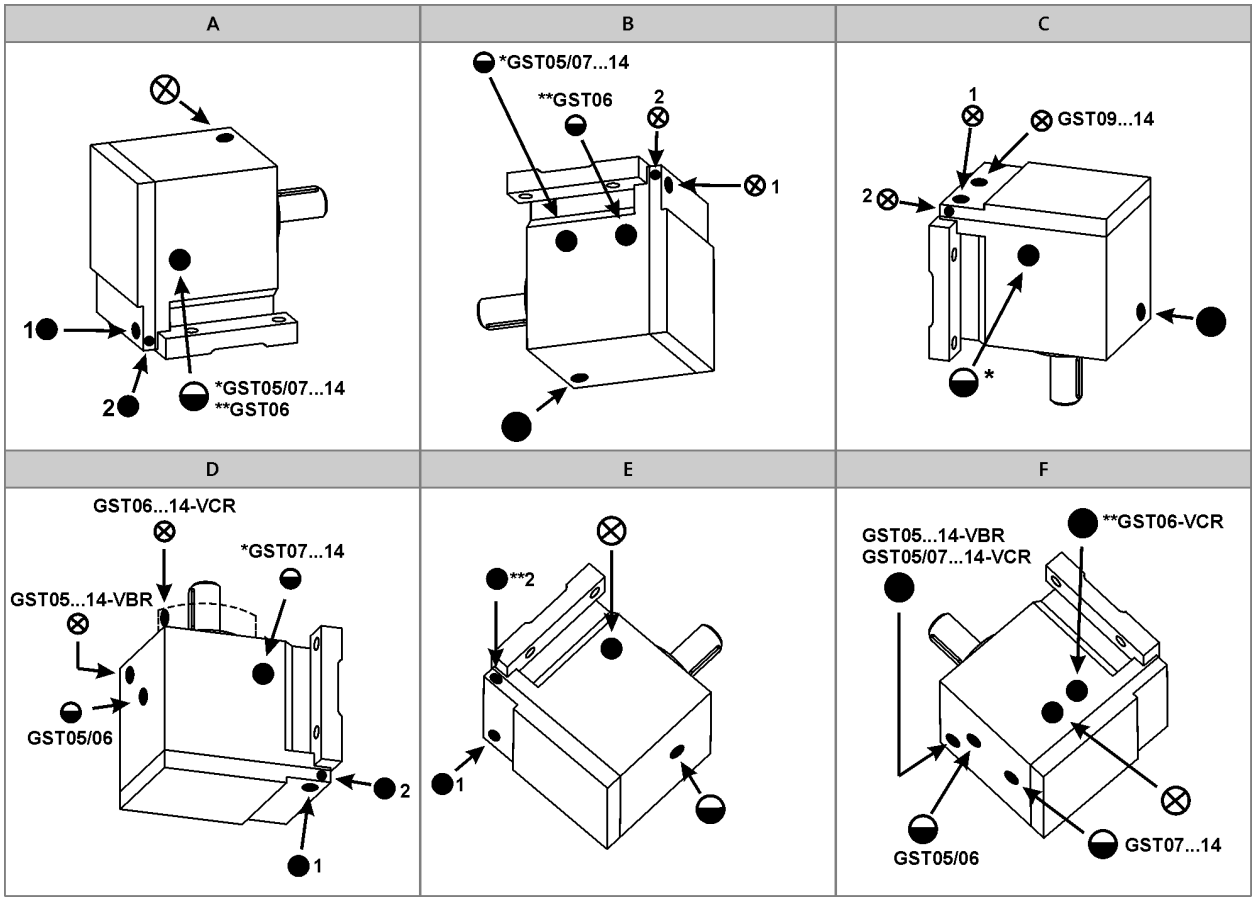

A to F Mounting position
⊗ Ventilation / Oil filler plug
● Oil drain plug
◒ Oil control plug
* On both sides
** On opposite side

Pos.1 standard
Pos.2 only for:
- GST05-2M V□□ 090□□□
- GST05-2M V□□ 100□□□
- GST06-2M V□□ 112□□□
- GST07-2M V□□ 160□□□

6.1

Ventilations

Position of ventilation, sealing elements and oil level check

GST05...14-3

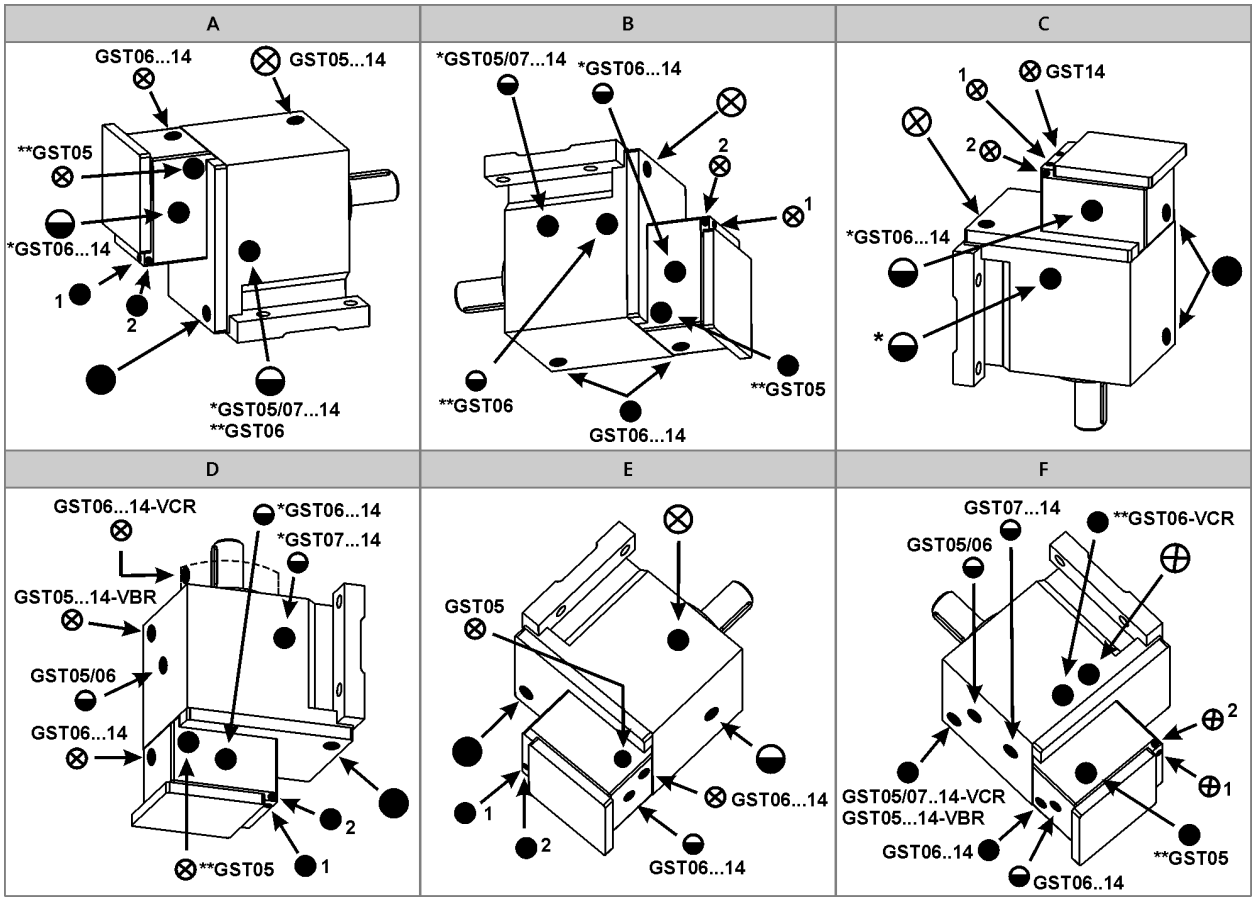

A to F Mounting position
⊗ Ventilation / Oil filler plug
● Oil drain plug
◒ Oil control plug
* On both sides
** On opposite side

Pos.1 standard
Pos.2 only for:
- GST07-3M V□□ 090□□□
- GST07-3M V□□ 100□□□
- GST09-3M V□□ 112□□□

6.1



Ventilations

Compensation reservoir for mounting position C

GST□□-2

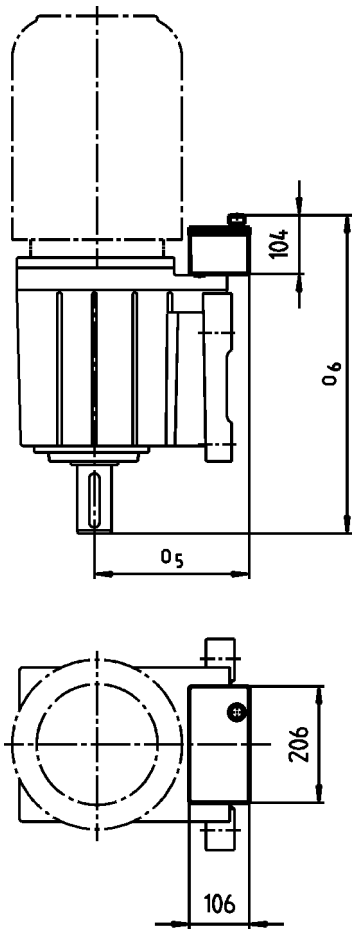

Motor	090 100		112		132		160 180 225	
	o_5	o_6	o_5	o_6	o_5	o_6	o_5	o_6
	[mm]	[mm]	[mm]	[mm]	[mm]	[mm]	[mm]	[mm]
GST09	206	477	226	477	245	477	260	477
GST11	208	536	230	540	254	540	268	540
GST14			252	640	282	640	282	640

► Terminal box position 4 not permitted.





GFL shaft-mounted helical gearbox

Mains operation
5.5 ... 45 kW (efficiency class IE3)



GFL shaft-mounted helical gearbox

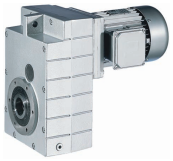

Contents

General information	List of abbreviations	6.2 - 4
	Product key	6.2 - 5
	Product information	6.2 - 7
	Functions and features	6.2 - 8
	Dimensioning	6.2 - 13
	Notes on ordering	6.2 - 17
	Ordering details checklist	6.2 - 18
Technical data	Permissible radial and axial forces at output	6.2 - 21
	Output backlash in angular minutes	6.2 - 25
	Moments of inertia	6.2 - 26
	Weights, 4-pole motors	6.2 - 31
	Additional weights for gearboxes	6.2 - 32
	Selection tables, 4-pole motors	6.2 - 33
	Dimensions, 4-pole motors	6.2 - 46
Accessories	Hollow shaft with shrink disc	6.2 - 75
	Mounting set for hollow shaft circlip: Proposed design for auxiliary tools	6.2 - 77
	Foot mounting in position 3	6.2 - 78
	Foot mounting in position 4	6.2 - 79
	Rubber buffer for torque plate	6.2 - 80
	Ventilations	6.2 - 81

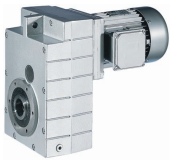

List of abbreviations

$\eta_{c=1}$		Efficiency
c		Load capacity
f_N	[Hz]	Rated frequency
$F_{ax,max}$	[N]	Max. axial force
$F_{rad,max}$	[N]	Max. radial force
H_{max}	[m]	Site altitude
i		Ratio
J	[kgcm²]	Moment of inertia
m	[kg]	Mass
M_2	[Nm]	Output torque
n_2	[r/min]	Output speed
n_N	[r/min]	Rated speed
P_N	[kW]	Rated power
$S_{hü}$	[1/h]	Transition operating frequency
$T_{opr,max}$	[°C]	Max. ambient operating temperature
$T_{opr,min}$	[°C]	Min. ambient operating temperature
$U_{N,\Delta}$	[V]	Rated voltage
$U_{N,Y}$	[V]	Rated voltage

CE	Communauté Européenne
CSA	Canadian Standards Association
DIN	Deutsches Institut für Normung e.V.
EMC	Electromagnetic compatibility
EN	European standard
IEC	International Electrotechnical Commission
IM	International Mounting Code
IP	International Protection Code
NEMA	National Electrical Manufacturers Association
UL	Underwriters Laboratory Listed Product
UR	Underwriters Laboratory Recognized Product
VDE	Verband deutscher Elektrotechniker (Association of German Electrical Engineers)
CCC	China Compulsory Certificate
GOST	Certificate for Russian Federation
cURus	Combined certification marks of UL for the USA and Canada
UkrSEPRO	Certificate for Ukraine

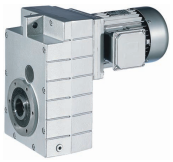

Product key

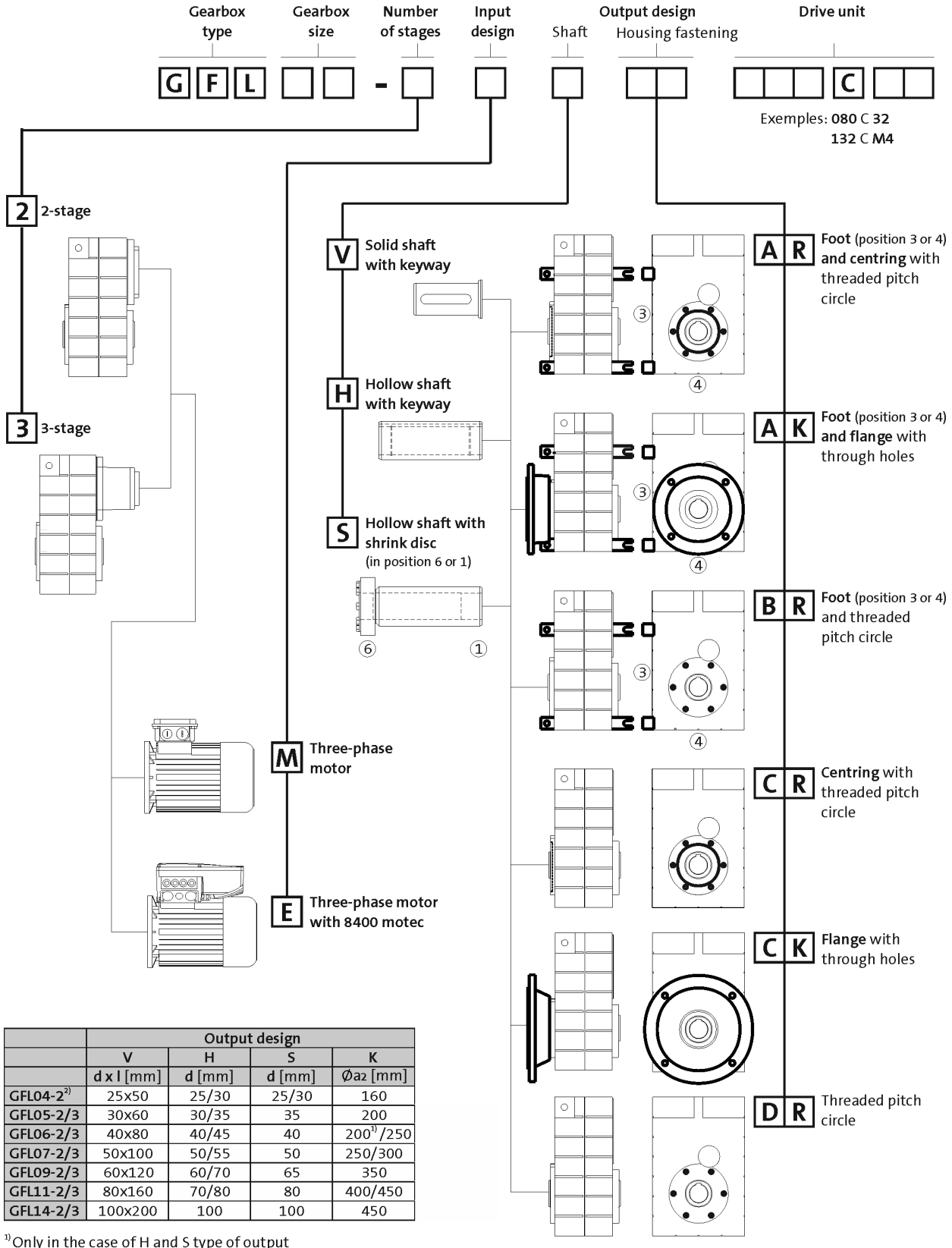

	Output design			
	V	H	S	K
	d x l [mm]	d [mm]	d [mm]	Øa2 [mm]
GFL04-2[2)]	25x50	25/30	25/30	160
GFL05-2/3	30x60	30/35	35	200
GFL06-2/3	40x80	40/45	40	200[1)]/250
GFL07-2/3	50x100	50/55	50	250/300
GFL09-2/3	60x120	60/70	65	350
GFL11-2/3	80x160	70/80	80	400/450
GFL14-2/3	100x200	100	100	450

[1)] Only in the case of H and S type of output
[2)] Output H version not possible with motor size 090

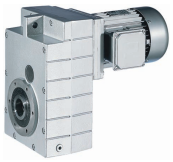

Product key

Mounting position (A to F) and position of system blocks (1 to 6)

A	B	C
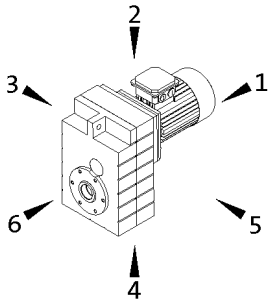	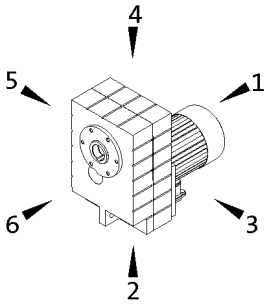	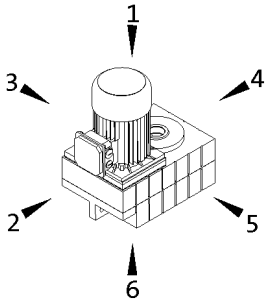
D	**E**	**F**
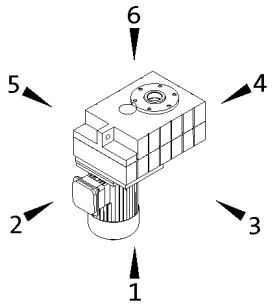	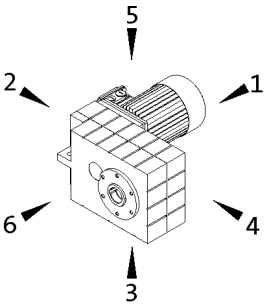	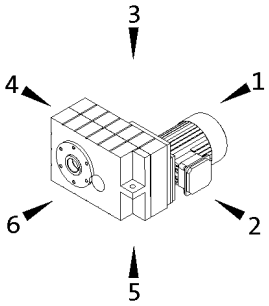

Hollow shaft: 0
Solid shaft: 6
Hollow shaft with shrink disc: 1, 6

Without foot: 0
Foot: 3, 4
Terminal box / motec: 2, 3, 4, 5

Gearbox designs

Basic versions	
Motor efficiency	Standard efficiency Increased efficiency (IE2) Premium efficiency (IE3)
Surface and corrosion protection	OKS-G (primer: grey) OKS-S (paint: RAL 7012)
Lubricant	CLP 460 (mineral)
Ventilation	Oil control plugs for GFL05 to 14 Breather elements for GFL06 ... 14

Options	
Surface and corrosion protection	OKS-S (special paint according to RAL) OKS-M (special paint according to RAL) OKS-L (special paint according to RAL)
Lubricant	CLP HC 320 (synthetic) CLP HC 220 USDA H1 (synthetic)
Shaft sealing rings	Driven shaft: Viton
Ventilation	Breather elements for GFL05 Compensation reservoir for GFL09 to 14-2 in mounting position C
Accessories	Rubber buffer for torque plate Shrink disc cover Mounting set for hollow shaft circlip
Nameplate	Metal nameplate (supplied loose) Adhesive nameplate (supplied loose)

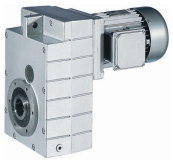

Product information

Lenze provides a geared motor construction kit, which covers a wide range of requirements. Numerous drive-side and output-side options enable precise adaptation of the drive to the specific application. This is the basis for versatile applications and functional scalability of our gearboxes and geared motors.
The modular concept and high power density make extremely compact sizes possible. Optimised teeth profiles and ground gears ensure low-noise operation and low backlash. The gearboxes are of compact and hence space-saving construction.

Types

- 2- and 3-stage gearboxes
- Hollow shaft with keyway or shrink disc
- Solid shaft with keyway
- Foot or flange mounting
- Torque plate, including rubber buffer
- With m200 three-phase AC motors (efficiency class IE3) in the power range 5.5 ... 45 kW

Compact and powerful

In combination with three-phase AC motors, our shaft-mounted helical gearboxes form a compact and effective drive unit. The low level of backlash of the gear teeth ensures highest precision. In addition, they can also distribute the power output and torque via an output shaft on both sides. The gearboxes are available in 2- and 3-stage versions with a torque of up to 11,615 Nm and a ratio of up to i=856.

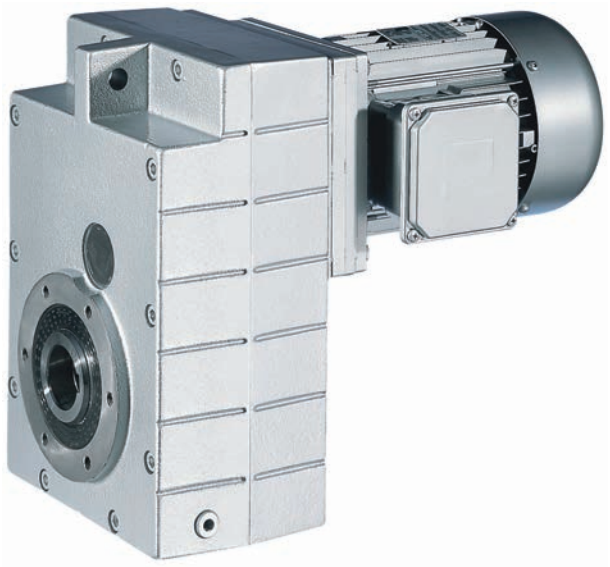

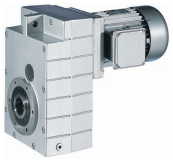

Functions and features

Gearbox type	GFL
Housing	
Design	Cuboid
Material	Aluminium / cast iron
Solid shaft	
Design	with keyway to DIN 6885
Tolerance	k6 (d ≤ 50 mm) m6 (d > 50 mm)
Material	Tempered steel C45 or 42CrMo4
Hollow shaft	
Design	H: with keyway S: smooth
Tolerance	Bore H7
Material	Tempered steel C45
Toothed parts	
Design	Ground tooth flanks Optimised tooth flank geometry
Material	Case-hardened steel
Shaft-hub joint	1st stage/prestage/helical (bevel) gearbox: Friction-type connection Output stage (= 2nd, 3rd or 4th stage): Friction-type or positive-fit connection
Shaft sealing rings	
Design	With dust lip
Material	NB / FP
Bearing	
Design	Ball bearing / tapered-roller bearing depending on size and design
Lubricants	
Standard	DIN 51502
Quantities	corresponding to mounting position (see operating instructions)
Mechanical efficiency	
1-stage gearboxes [$\eta_{c=1}$]	
2-stage gearboxes [$\eta_{c=1}$]	0.97
3-stage gearboxes [$\eta_{c=1}$]	0.95
4-stage gearboxes [$\eta_{c=1}$]	
Notes	

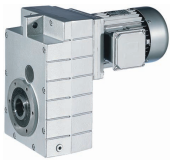

Functions and features

Lubricants

Lenze gearboxes and geared motors are ready for operation on delivery and are filled with lubricants specific to both the drive and the design. The mounting position and design specified in the order are key factors in choosing the volume of lubricant.

The lubricants listed in the lubricant table are approved for use in Lenze drives.

Lubricant table

Mode	CLP 460	CLP HC 320	CLP HC 220 USDA H1
Ambient temperature [°C]	0 ... +40	-25 ... +50	-20 ... +40
Specification	Mineral based oil with additives	Synthetic-based oil (synthetic hydrocarbon / poly-alpha-olefin oil)	
Note			For food processing industry
Changing interval	16000 operating hours not later than after three years (oil temperature 70 to 80 °C)	25000 operating hours not later than after three years (oil temperature 70 to 80 °C)	16000 operating hours not later than after three years (oil temperature 70 to 80 °C)
Fuchs	Fuchs Renolin CLP 460	Fuchs Renolin Unisyn CLP 320	bremer & leguil Cassida Fluid GL 220
Klüber	Klüberoil GEM1-460 N	Klübersynth GEM4-320 N	Klüberoil 4 UH1-220 N
Shell	Shell Omala S2 G 460	Shell Omala S4 GX HD 320	

► Please contact your Lenze sales office if you are operating at ambient temperatures in areas up to< -20 °C bzw. > or up to +40°C.

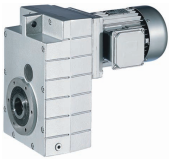

Functions and features

Surface and corrosion protection

For optimum protection of geared motors against ambient conditions, the surface and corrosion protection system (OKS) offers tailor-made solutions.

Various surface coatings combined with other protective measures ensure that the geared motors operate reliably even at high air humidity, in outdoor installations or in the presence of atmospheric impurities. Any colour from the RAL Classic collection can be chosen for the top coat. The geared motors are also available unpainted (no surface and corrosion protection).

Surface and corrosion protection system	Applications	Measures
	Catalogue text	Catalogue text
OKS-G (primed)	• Dependent on subsequent top coat applied	• 2K PUR priming coat (grey) • Zinc-coated screws • Rust-free breather elements Optional measures • Stainless steel nameplate
OKS-S (small)	• Standard applications • Internal installation in heated buildings • Air humidity up to 90%	• Surface coating as per corrosivity category C1 (in line with EN 12944-2) • Zinc-coated screws • Rust-free breather elements Optional measures • Stainless steel nameplate
OKS-M (medium)	• Internal installation in non-heated buildings • Covered, protected external installation • Air humidity up to 95%	• Surface coating as per corrosivity category C2 (in line with EN 12944-2) • Zinc-coated screws • Rust-free breather elements Optional measures • Stainless steel shaft • Stainless steel nameplate • Rust-free shrink disc (on request)
OKS-L (high)	• External installation • Air humidity above 95% • Chemical industry plants • Food industry	• Surface coating as per corrosivity category C3 (in line with EN 12944-2) • Blower cover and B end shield additionally primed • Cable glands with gaskets • Corrosion-resistant brake with cover ring, stainless friction plate, and chrome-plated armature plate (on request) • All screws/screw plugs zinc-coated • Stainless breather elements • Threaded holes that are not used are closed by means of plastic plugs Optional measures • Sealed recesses on motor (on request) • Stainless steel shaft • Stainless steel nameplate • Rust-free shrink disc (on request) • Additional priming coat on cast iron fan • Oil expansion tank and torque plates painted separately and supplied loose

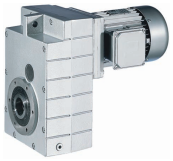

Functions and features

Structure of surface coating

Surface and corrosion protection system	Corrosivity category	Surface coating	Colour
	DIN EN ISO 12944-2	Structure	
Without OKS (uncoated)		Dipping primed gearbox	
OKS-G (primed)		Dipping primed gearbox 2K PUR priming coat	
OKS-S (small)	Comparable to C1	Dipping primed gearbox 2K-PUR top coat	Standard: RAL 7012 Optional: RAL Classic
OKS-M (medium)	Comparable to C2	Dipping primed gearbox 2K PUR priming coat 2K-PUR top coat	Standard: RAL 7012 Optional: RAL Classic
OKS-L (high)	Comparable to C3	Dipping primed gearbox 2K PUR priming coat 2K-PUR top coat	Standard: RAL 7012 Optional: RAL Classic

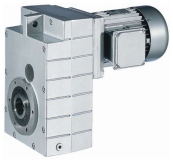

Functions and features

Ventilation

Non-ventilated gearboxes
No ventilation is required for the GFL04 gearbox.

Gearboxes that may optionally be equipped with ventilation
Special measures are not usually required when using the GFL05 gearbox. In borderline cases, e.g. at input speeds > 2000 r/min, we recommend the use of breather elements, which we can supply if required.

Ventilated gearboxes
The gearboxes GFL06 to 14 are supplied with breather elements as standard.

Special measures for mounting position C (motor on top)
We recommend that an oil compensation reservoir is always used with gearbox sizes G□□09 to 14 in this mounting position. This reservoir can be purchased as an option. For illustrations and measures, please refer to the Accessories chapter.

This is not required at higher ratios or low input speeds. Please contact Lenze for confirmation in this case.

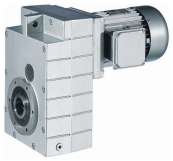

Dimensioning

General information about the data provided in this catalogue

The powers, torques and speeds specified in this catalogue are rounded values and are valid under the following conditions:

- Operating time/day = 8 h (100% OT)
- Duty class I for up to 10 switching operations/h
- Mounting positions and designs in this catalogue
- Standard lubricant
- T_{amb} = 20 °C for gearboxes,
  T_{amb} = 40 °C for motors (in accordance with EN 60034)
- Site altitude < = 1000 m amsl
- The selection tables provide the permissible mechanical powers and torques. For notes on the thermal power limit, see chapter drive dimensioning.
- The rated power specified for motors and geared motors applies to operating mode S1 (in accordance with EN 60034).

Under different operating conditions, the values obtained may vary from those listed here.
In the case of extreme operating conditions, please consult your Lenze sales office.

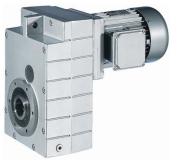

Dimensioning

Thermal power limit

The thermal power limit, defined by the heat balance, limits the permissible gearbox continuous power. It may be less than the mechanical power ratings listed in the selection tables.

The thermal power limit is affected by:
- the churning losses in the lubricant. These are determined by the mounting position and the circumferential speed of the gears;
- the load and the speed
- the ambient conditions: temperature, air circulation, input or dissipation via shafts and the foundation

Please consult your Lenze sales office
- if the following input speeds n_1 are exceeded on a continuous basis (continuous is defined as more than 8 h/day):

Motor frame size	Mounting position A, B, E, F	Mounting position C, D
063 ... 100	3000 r/min	3000 r/min
112 ... 132	3000 r/min	1500 r/min
160 ... 225	2000 r/min	1500 r/min

- if the following input speeds n_1 are exceeded:

Motor frame size	Mounting position A, B, E, F	Mounting position C, D
063 ... 100	4000 r/min	3000 r/min
112 ... 132	4000 r/min	2000 r/min
160 ... 225	3000 r/min	1500 r/min

- or if you are using the following gearbox type, size and ratio combinations at an input speed of n_1 > 1500 r/min:

Gearbox type	Gearbox size	Ratio i
GFL shaft-mounted helical gearbox	07, 09, 11, 14	≤ 16

Possible ways of extending the application area

- synthetic lubricant (option)
- shaft sealing rings made from FP material/Viton (option)
- reduction in lubricant quantity
- cooling of the geared motor by means of air convection on the machine/system

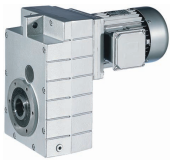

Dimensioning

Load capacity and application factor

Load capacity c of gearbox
Rated value for the load capacity of Lenze geared motors.
- c is the ratio of the permissible rated torque of the gearbox to the rated torque supplied by the drive component (e.g. the built-in Lenze motor).
- The value of c must always be greater than the value of the application factor k calculated for the application.

Requierement: c ≥ k

Application factor k (according to DIN 3990)
Takes into account the influence of temporally variable loads which are actually present during the anticipated operating time of gearboxes and geared motors.
k is determined by:
- the type of load
- the load intensity
- temporal influences

Duty class	Load type	Intensity	
I	Smooth operation, small or light jolts	$F_I \leq 1.25$	$F_I = \frac{\frac{J_L}{i^2} + J_M + J_B + J_Z}{J_M + J_B + J_Z}$
II	Uneven operation, average jolts	$1.25 < F_I \leq 4$	
III	Uneven operation, severe jolts and/or alternating load	$F_I > 4$	

J_L= moment of inertia of the load
i = gearbox ratio
J_M= moment of inertia of the motor
J_B= moment of inertia of the motor brake
J_Z= moment of inertia of additional built-on motor accessories

Application factor k

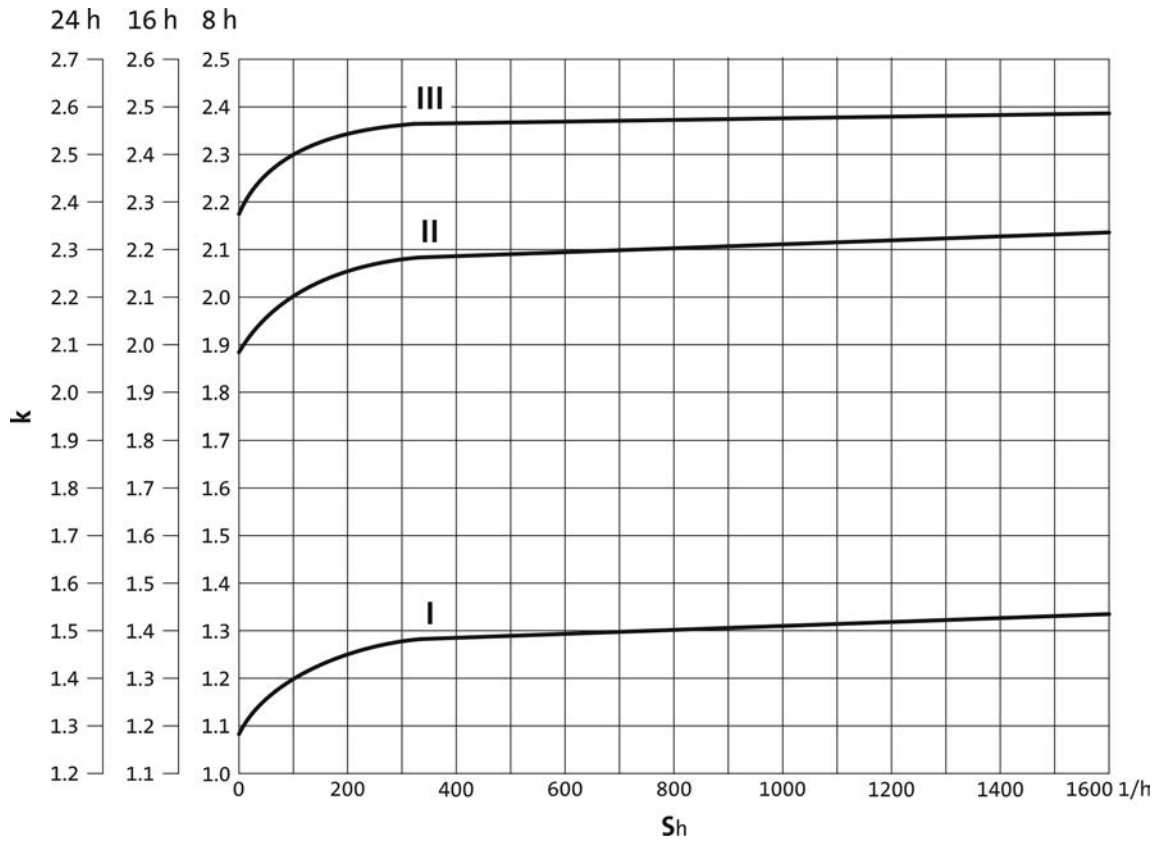

S_h= switching operations/hour

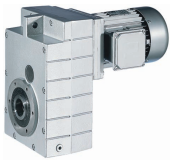

Dimensioning

Notes on the selection tables

The selection tables show the available combinations of gearbox type, number of stages, ratio and motor. They are used only to provide basic orientation.
The following legend indicates the structure of the selection tables.

Rated power Prated of the drive motor depending on the rated frequency

50 Hz: P_N = 5.5 kW

2-stufige Getriebe ← **Number of the gear stage of the gearbox**

Mains operation 400 V, 50 Hz			i	Product		
n_2 [r/min]	M_2 [Nm]	c		GFL	m200	
399	128	2.7	3.675	GFL06	-P132M4	48
316	161	4.0	4.643	GFL07	-P132M4	52

Mains operation
Output speed **n2**
Output torque **M2**

Load capacity c of the gearbox
c is the ratio between the permissible rated torque of the gearbox and the rated torque of the three-phase AC motor (converted to the driven shaft).
c must be always higher than the service factor **k** determined for the application **k**.

$$c = \frac{M_{2,zul}}{M_{1N} \cdot i \cdot \eta_{Getr}} > k$$

Ratio i

Product Gearbox

Product Motor

Page number for dimensions

Motor voltages

The power values and torques indicated in the selection tables refer to the following motor voltages:
- 50 Hz : Δ 400 V

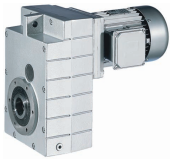

Notes on ordering

We want to be sure that you receive the correct products in good time.

To allow us to achieve this we need:
- your address and your company data
- our product key for the individual products in this catalogue
- your delivery date and delivery address

Ordering procedure
Please use the ordering information checklist to ensure that you provide all the ordering information required for the various products.

The ordering information checklist, the product key, the basic versions, options, mounting position and position of the system blocks will be found in the General – Product key section.

A list of Lenze's worldwide sales offices can be found on the Internet: www.Lenze.com.

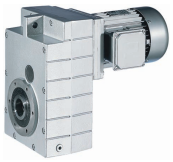

Ordering details checklist

☐ **Offer**

Page __ of __

☐ **Order**

Customer No.

Job No.

Fax No. _____

Sender

Company _____ Made out by (name) _____

Street/P.O. Box _____ Department _____

P.O. Box, City _____ Telephone No. _____

Date _____ Signature _____

Delivery address (if different)

Street/P.O. Box _____ Desired delivery date _____

P.O. Box, City _____ Dispatching notes _____

Invoice recipient (if different)

Street/P.O. Box _____

Postal code, City _____

6.2

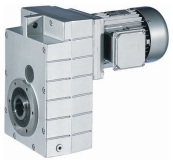

Ordering details checklist

Customer No. ☐☐☐☐☐☐☐☐

Job No. ☐☐☐☐☐☐☐☐☐☐

Page __

Quantity ☐☐☐

Efficiency class ☐ High efficiency (IE3)

Rated frequency ☐ 50 Hz

Ratio i ☐☐☐

GFL ☐☐ – ☐ 2 / 3 ☐ M / E ☐ V / H / S ☐ A / B / C / D ☐ R / K

Motor frame size ☐☐☐C☐☐

Hollow shaft d = ☐ mm

Flange a_2 = ☐ mm

Mounting position A ☐ B ☐ C ☐ D ☐ E ☐ F ☐

Position of system blocks

Shaft/shrink disc: 0 ☐ 6 ☐ 1 ☐

Foot: 0 ☐ 3 ☐ 4 ☐

Terminal box: 2 ☐ 3 ☐ 4 ☐ 5 ☐

Surface and corrosion protection

☐ OKS-S colour: RAL 7012

☐ OKS-G (primed)

Options

Special lubricants

☐ CLP HC 320 (synthetic)

☐ CLP HC 220 USDA H1 (for the food industry)

Surface and corrosion protection

☐ OKS-S (small)

☐ OKS-M (medium) ☐

☐ OKS-L (high)

☐ OKS-G (primed)

Accessories

☐ Rubber buffer for torque support

☐ Mounting set for hollow-shaft circlip

☐ Hollow shaft cover, hoseproof

Shaft sealing rings

☐ Viton

Breathing

☐ Breather elements for GFL05

☐ Compensation reservoir in mounting position for GFL09 ... 14-2

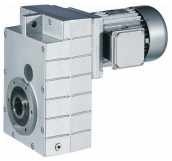

Ordering details checklist

Three-phase AC motors options

Customer No. ☐☐☐☐☐☐☐☐

Job No. ☐☐☐☐☐☐☐☐☐☐

Page __

Motor connection

Terminal box ☐

Cable entry in position 1 ☐ 2 ☐ 3 ☐ 4 ☐ 5 ☐

Spring-applied brake

Brake version ☐ Standard

Brake size ☐

Characteristic torque ☐ Nm

Rated voltage AC ☐ DC ☐ ☐ V

Rectifier Only in the case of AC supply voltage

☐ Half-wave rectifier ☐ Bridge rectifier

Brake options Manual release lever in position 2 ☐ 3 ☐ 4 ☐ 5 ☐

Motor protection

☐ TKO ☐ PTC

Further options

☐ 2nd nameplate (adhesive nameplate/metal nameplate)

6.2

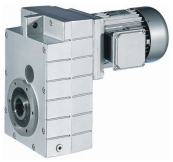

Permissible radial and axial forces at output

Permissible radial force
$F_{rad,per} = \min(f_w \times f_\alpha \times F_{rad,max}\ ;\ f_w \times F_{rad,max}$ at $n_2 \leq 16$ r/min)

Permissible axial force
$F_{ax,per} = F_{ax,max}$ if $F_{rad} = 0$

If F_{rad} **and** $F_{ax} \neq 0$, please contact your Lenze sales office.

Application of forces

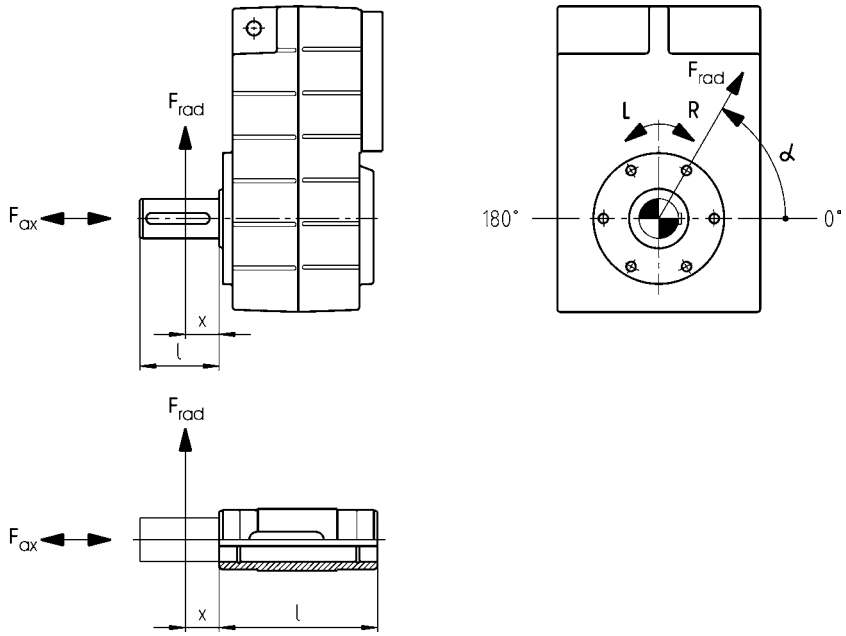

Effective direction factor f_α at output shaft

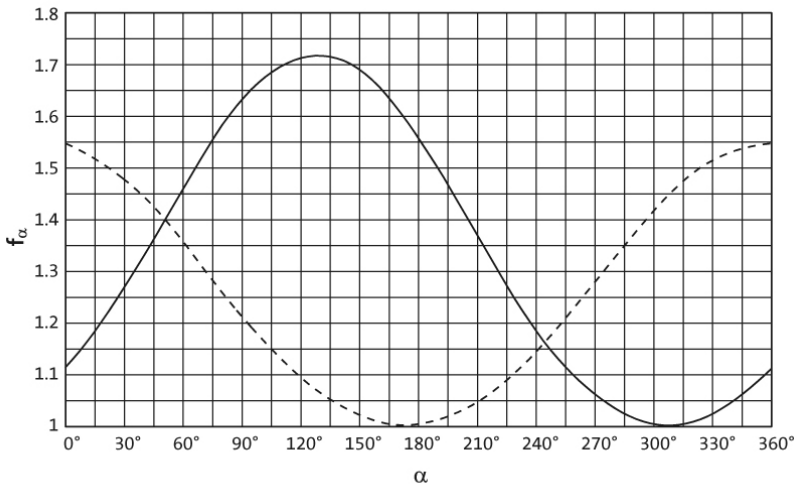

——— Direction of rotation R
— — — Direction of rotation L

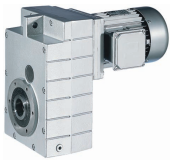

Permissible radial and axial forces at output

Additional load factor f_w at output shaft

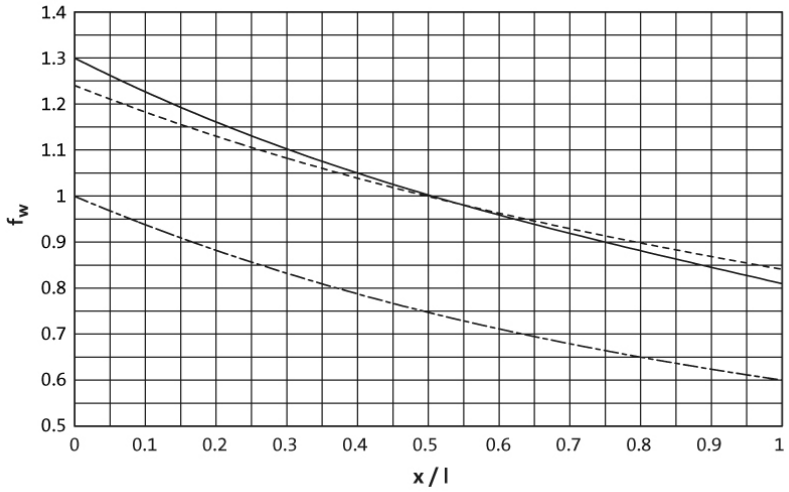

——— Solid shaft (V□□)
— · — Hollow shaft (H□□)
— — — Solid shaft with flange (V□K)

GFL□□-2/3□ H□□

Size	n_2 [r/min]									
Gearbox	1000	630	400	250	160	100	63	40	25	≤16

	Max. radial force, Hollow shaft									
	$F_{rad,max}$	$F_{rad,max}$	$F_{rad,max}$	$F_{rad,max}$	$F_{rad,max}$	$F_{rad,max}$	$F_{rad,max}$	$F_{rad,max}$	$F_{rad,max}$	$F_{rad,max}$
	[N]	[N]	[N]	[N]	[N]	[N]	[N]	[N]	[N]	[N]
GFL04	2100	2700	2800	3200	3800	4600	5500	6300	7000	7000
GFL05	1800	2400	3000	3400	4100	5000	6000	7100	8000	8000
GFL06	2400	3300	4300	4700	5000	6600	8500	10800	12000	12000
GFL07	2200	3400	4500	5100	6400	7900	9300	11500	15000	16000
GFL09			5000	6000	7200	10500	13000	15000	22000	24000
GFL11			7300	8700	10000	14200	19000	23000	27000	30000
GFL14			8000	9000	9500	11500	14000	18000	30000	45000

	Max. axial force, Hollow shaft									
	$F_{ax,max}$	$F_{ax,max}$	$F_{ax,max}$	$F_{ax,max}$	$F_{ax,max}$	$F_{ax,max}$	$F_{ax,max}$	$F_{ax,max}$	$F_{ax,max}$	$F_{ax,max}$
	[N]	[N]	[N]	[N]	[N]	[N]	[N]	[N]	[N]	[N]
GFL04	1300	1700	2200	2600	3200	4200	5300	5500	5500	5500
GFL05	1600	2200	2800	3600	4200	5900	6600	6600	6600	6600
GFL06	2400	3200	4000	5200	6000	8500	10000	10000	10000	10000
GFL07	2000	2700	3400	4700	6000	8500	12000	14000	14000	14000
GFL09			3100	4200	5800	10000	13500	17000	21000	21000
GFL11			4700	6000	7500	14000	19000	25000	27000	27000
GFL14			4000	5000	6200	7500	11000	17500	31000	35000

- Application of force F_{rad}: at hollow shaft end face (x = 0)
- $F_{ax,max}$ only valid with F_{rad} = 0
- Neither radial nor axial forces are permissible for the hollow shaft with shrink disc (S□□).

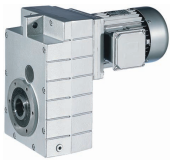

Permissible radial and axial forces at output

GFL□□-2/3□ V□R

Size	n_2 [r/min]									
Gearbox	1000	630	400	250	160	100	63	40	25	≤16

	Max. radial force, Solid shaft without flange									
	$F_{rad,max}$	$F_{rad,max}$	$F_{rad,max}$	$F_{rad,max}$	$F_{rad,max}$	$F_{rad,max}$	$F_{rad,max}$	$F_{rad,max}$	$F_{rad,max}$	$F_{rad,max}$
	[N]	[N]	[N]	[N]	[N]	[N]	[N]	[N]	[N]	[N]
GFL04	1650	2100	2300	2700	3200	3600	3600	3600	3600	3600
GFL05	1400	1900	2400	2700	3200	4000	4800	5800	6200	6200
GFL06	1850	2500	3200	3600	3900	5100	6500	8400	9000	9000
GFL07	1650	2600	3200	3600	3900	5100	6500	8400	9000	9000
GFL09 [1]			3800	4400	5500	8000	10000	12000	18000	18000
GFL11 [1]			5500	6300	7300	11200	14500	17400	20500	23000
GFL14			47000	54000	62000	65000	65000	65000	65000	65000

	Max. axial force, Solid shaft without flange									
	$F_{ax,max}$	$F_{ax,max}$	$F_{ax,max}$	$F_{ax,max}$	$F_{ax,max}$	$F_{ax,max}$	$F_{ax,max}$	$F_{ax,max}$	$F_{ax,max}$	$F_{ax,max}$
	[N]	[N]	[N]	[N]	[N]	[N]	[N]	[N]	[N]	[N]
GFL04	1300	1700	2200	2600	3200	4200	5300	5500	5500	5500
GFL05	1600	2200	2800	3600	4200	5900	6600	6600	6600	6600
GFL06	2400	3200	4000	5200	6000	8500	10000	10000	10000	10000
GFL07	2000	2700	3400	4700	6000	8500	12000	14000	14000	14000
GFL09 [1]			3100	4200	5800	10000	13500	17000	21000	21000
GFL11 [1]			4700	6000	7500	14000	19000	25000	27000	27000
GFL14			25000	27000	29000	32000	35000	35000	35000	35000

[1] Reinforced output shaft bearings are available on request for V□R versions.

- Application of force F_{rad}: centre of shaft journal (x = l/2)
- $F_{ax,max}$ only valid with F_{rad} = 0

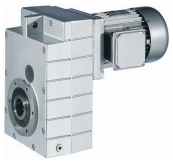

Permissible radial and axial forces at output

GFL□□-2/3□ V□K

Size	n_2 [r/min]									
Gearbox	1000	630	400	250	160	100	63	40	25	≤16

	Max. radial force, Solid shaft with flange									
	$F_{rad,max}$	$F_{rad,max}$	$F_{rad,max}$	$F_{rad,max}$	$F_{rad,max}$	$F_{rad,max}$	$F_{rad,max}$	$F_{rad,max}$	$F_{rad,max}$	$F_{rad,max}$
	[N]	[N]	[N]	[N]	[N]	[N]	[N]	[N]	[N]	[N]
GFL04	2300	2800	3200	3700	4400	4600	4600	4600	4600	4600
GFL05	2900	3700	4300	5100	5900	6800	7000	7000	7000	7000
GFL06	4000	5000	6100	7000	7800	9600	10000	10000	10000	10000
GFL07	4000	5200	6400	7400	8900	10500	12000	13000	14000	14000
GFL09			7800	9000	10500	14000	15000	15000	15000	15000
GFL11			12500	14500	17000	21500	26000	30000	30000	30000
GFL14			18000	20000	23000	27500	32000	38000	43000	43000

	Max. axial force, Solid shaft with flange									
	$F_{ax,max}$	$F_{ax,max}$	$F_{ax,max}$	$F_{ax,max}$	$F_{ax,max}$	$F_{ax,max}$	$F_{ax,max}$	$F_{ax,max}$	$F_{ax,max}$	$F_{ax,max}$
	[N]	[N]	[N]	[N]	[N]	[N]	[N]	[N]	[N]	[N]
GFL04	1300	1700	2200	2600	3200	4200	4400	4400	4400	4400
GFL05	1800	2400	3100	3900	4800	6400	6600	6600	6600	6600
GFL06	2500	3400	4300	5500	6500	8500	10000	10000	10000	10000
GFL07	3600	4800	6100	6500	7000	9500	11500	11500	11500	11500
GFL09			6100	6500	7000	9500	11500	11500	11500	11500
GFL11			6800	8500	10500	17000	22000	27000	27000	27000
GFL14			6000	8000	10000	13000	19000	26000	35000	35000

- Application of force F_{rad}: centre of shaft journal (x = l/2)
- $F_{ax,max}$ only valid with F_{rad} = 0

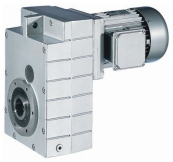

Output backlash in angular minutes

► Backlash ϕ depending on ratio i

GFL04 to 14-2

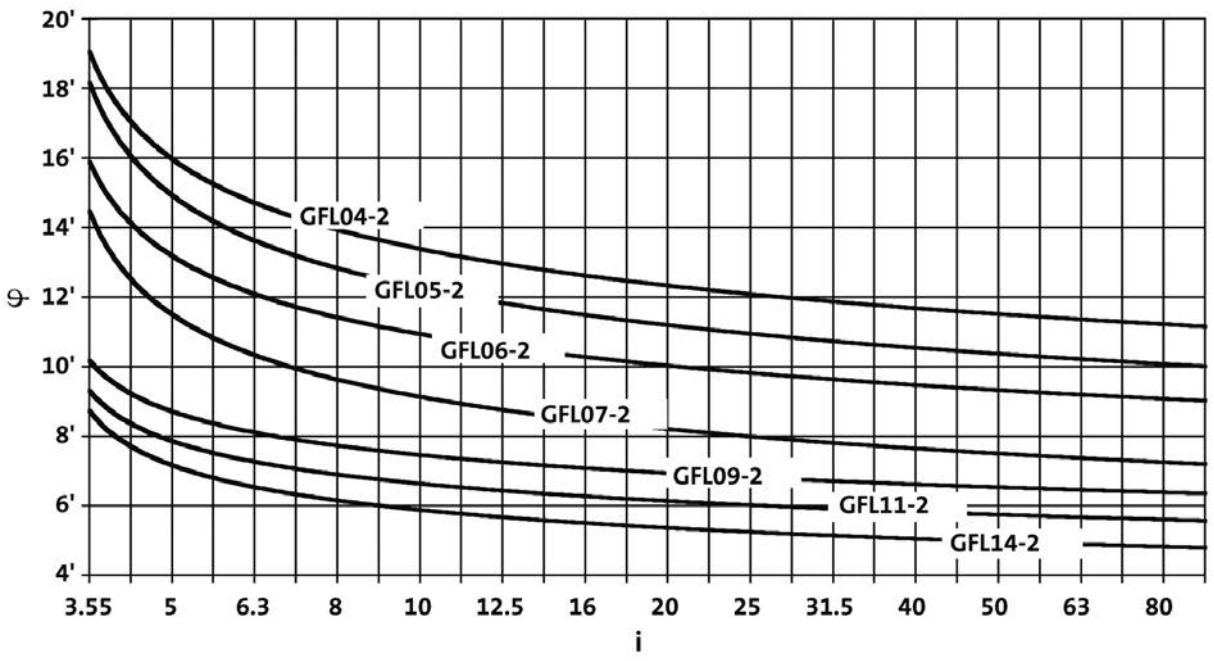

GFL05 to 14-3

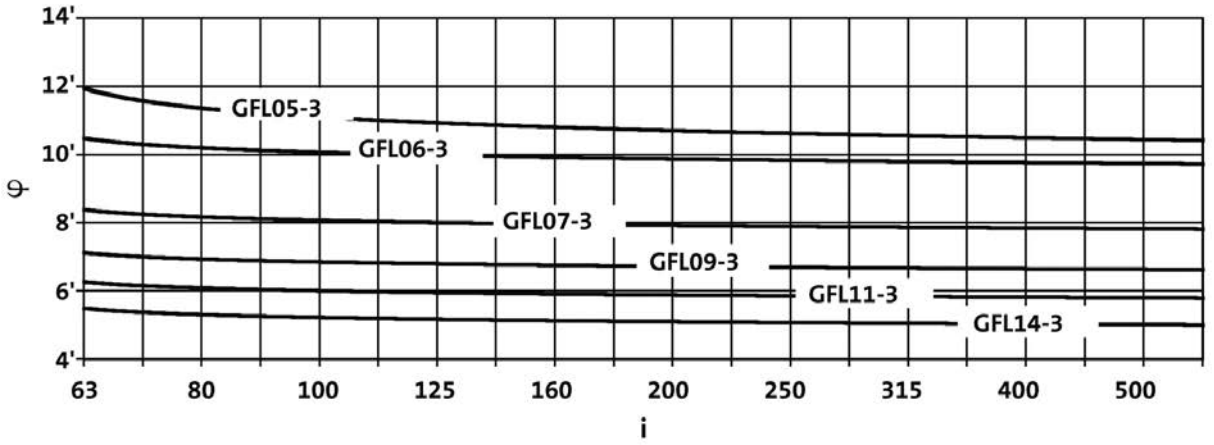

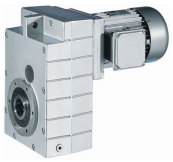

Moments of inertia

GFL□□-2

► Moment of inertia (J) depending on ratio i

Gearbox			GFL04
3.659	J	[kgcm²]	1.510
5.018	J	[kgcm²]	0.858
5.833	J	[kgcm²]	0.925
6.422	J	[kgcm²]	0.555
7.025	J	[kgcm²]	0.473
8.379	J	[kgcm²]	0.666
9.333	J	[kgcm²]	0.613
10.238	J	[kgcm²]	0.366
11.491	J	[kgcm²]	0.410
12.800	J	[kgcm²]	0.382
14.706	J	[kgcm²]	0.282
16.087	J	[kgcm²]	0.245
17.920	J	[kgcm²]	0.230
20.519	J	[kgcm²]	0.171
22.857	J	[kgcm²]	0.163
25.136	J	[kgcm²]	0.129
28.000	J	[kgcm²]	0.123
31.600	J	[kgcm²]	0.086
35.200	J	[kgcm²]	0.082
40.697	J	[kgcm²]	0.058
45.333	J	[kgcm²]	0.056
51.579	J	[kgcm²]	0.038
57.455	J	[kgcm²]	0.037
64.636	J	[kgcm²]	0.026
72.000	J	[kgcm²]	0.025
85.156	J	[kgcm²]	0.016
94.857	J	[kgcm²]	0.015

Gearbox			GFL05
3.333	J	[kgcm²]	1.677
4.571	J	[kgcm²]	2.133
5.133	J	[kgcm²]	2.372
5.667	J	[kgcm²]	2.329
6.400	J	[kgcm²]	0.822
7.040	J	[kgcm²]	1.470
7.771	J	[kgcm²]	1.450
9.010	J	[kgcm²]	0.951
9.946	J	[kgcm²]	0.885
11.360	J	[kgcm²]	1.082
12.800	J	[kgcm²]	1.012
14.538	J	[kgcm²]	0.746
15.904	J	[kgcm²]	0.603
17.920	J	[kgcm²]	0.609
20.286	J	[kgcm²]	0.428
22.857	J	[kgcm²]	0.434
24.850	J	[kgcm²]	0.345
28.000	J	[kgcm²]	0.331
32.344	J	[kgcm²]	0.204
36.444	J	[kgcm²]	0.195
40.233	J	[kgcm²]	0.148
45.333	J	[kgcm²]	0.142
52.067	J	[kgcm²]	0.093
58.667	J	[kgcm²]	0.090
63.190	J	[kgcm²]	0.068
71.200	J	[kgcm²]	0.064
80.763	J	[kgcm²]	0.043
91.000	J	[kgcm²]	0.042

► The moments of inertia relate to the drive shaft of the gearbox.
► The total moment of inertia is calculated by adding the values of the gearbox, motor and accessories.

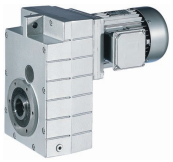

Moments of inertia

GFL□□-2

► Moment of inertia (J) depending on ratio i

Gearbox			GFL06
3.675	J	[kgcm²]	7.755
5.211	J	[kgcm²]	6.636
5.750	J	[kgcm²]	6.044
6.450	J	[kgcm²]	3.651
7.147	J	[kgcm²]	4.044
8.400	J	[kgcm²]	4.264
9.463	J	[kgcm²]	3.879
10.092	J	[kgcm²]	2.520
11.520	J	[kgcm²]	1.730
12.978	J	[kgcm²]	2.610
14.743	J	[kgcm²]	1.950
16.128	J	[kgcm²]	1.680
18.169	J	[kgcm²]	1.570
20.571	J	[kgcm²]	1.190
23.175	J	[kgcm²]	1.130
25.200	J	[kgcm²]	0.904
28.389	J	[kgcm²]	0.861
32.800	J	[kgcm²]	0.581
36.951	J	[kgcm²]	0.556
40.800	J	[kgcm²]	0.425
45.963	J	[kgcm²]	0.407
52.800	J	[kgcm²]	0.264
59.481	J	[kgcm²]	0.251
64.080	J	[kgcm²]	0.193
72.189	J	[kgcm²]	0.187
81.000	J	[kgcm²]	0.125
91.250	J	[kgcm²]	0.121

Gearbox			GFL07
3.350	J	[kgcm²]	19.570
4.643	J	[kgcm²]	11.988
5.159	J	[kgcm²]	11.120
5.695	J	[kgcm²]	18.094
6.400	J	[kgcm²]	9.831
7.150	J	[kgcm²]	11.878
8.324	J	[kgcm²]	13.113
9.379	J	[kgcm²]	12.037
9.714	J	[kgcm²]	8.030
11.538	J	[kgcm²]	8.520
13.000	J	[kgcm²]	7.970
14.200	J	[kgcm²]	6.350
15.904	J	[kgcm²]	5.270
17.920	J	[kgcm²]	4.980
20.286	J	[kgcm²]	3.470
22.857	J	[kgcm²]	3.268
24.850	J	[kgcm²]	2.645
28.000	J	[kgcm²]	2.525
32.344	J	[kgcm²]	1.690
36.444	J	[kgcm²]	1.610
39.642	J	[kgcm²]	1.250
44.667	J	[kgcm²]	1.200
52.067	J	[kgcm²]	0.783
58.667	J	[kgcm²]	0.753
63.190	J	[kgcm²]	0.573
71.200	J	[kgcm²]	0.555
79.875	J	[kgcm²]	0.366
90.000	J	[kgcm²]	0.358

► The moments of inertia relate to the drive shaft of the gearbox.
► The total moment of inertia is calculated by adding the values of the gearbox, motor and accessories.

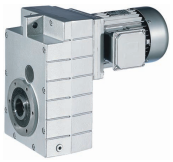

Moments of inertia

GFL□□-2

► Moment of inertia (J) depending on ratio i

Gearbox			GFL09
6.864	J	[kgcm²]	41.300
7.466	J	[kgcm²]	38.700
9.010	J	[kgcm²]	26.800
9.799	J	[kgcm²]	25.300
11.167	J	[kgcm²]	19.500
12.307	J	[kgcm²]	27.600
14.333	J	[kgcm²]	20.000
16.333	J	[kgcm²]	15.500
18.407	J	[kgcm²]	14.600
19.667	J	[kgcm²]	12.100
22.164	J	[kgcm²]	11.300
24.111	J	[kgcm²]	9.040
27.173	J	[kgcm²]	8.630
32.667	J	[kgcm²]	5.430
36.815	J	[kgcm²]	5.210
39.667	J	[kgcm²]	4.070
44.704	J	[kgcm²]	3.920
51.333	J	[kgcm²]	2.590
57.852	J	[kgcm²]	2.500
62.300	J	[kgcm²]	1.890
70.211	J	[kgcm²]	1.830
78.750	J	[kgcm²]	1.250
88.750	J	[kgcm²]	1.210

Gearbox			GFL11
6.864	J	[kgcm²]	124.000
7.466	J	[kgcm²]	116.000
9.010	J	[kgcm²]	79.600
9.799	J	[kgcm²]	74.800
10.720	J	[kgcm²]	65.000
12.480	J	[kgcm²]	81.500
14.538	J	[kgcm²]	58.400
15.904	J	[kgcm²]	51.300
17.920	J	[kgcm²]	48.300
20.286	J	[kgcm²]	36.100
22.857	J	[kgcm²]	34.300
24.850	J	[kgcm²]	26.900
28.000	J	[kgcm²]	25.700
32.739	J	[kgcm²]	17.100
36.889	J	[kgcm²]	16.500
40.233	J	[kgcm²]	12.600
45.333	J	[kgcm²]	12.200
52.067	J	[kgcm²]	8.080
58.667	J	[kgcm²]	7.810
63.190	J	[kgcm²]	5.900
71.200	J	[kgcm²]	5.720
79.875	J	[kgcm²]	3.870
90.000	J	[kgcm²]	3.760

Gearbox			GFL14
7.150	J	[kgcm²]	344.000
7.777	J	[kgcm²]	321.000
8.800	J	[kgcm²]	247.000
9.571	J	[kgcm²]	232.000
11.538	J	[kgcm²]	242.000
13.000	J	[kgcm²]	225.000
14.200	J	[kgcm²]	625.000
15.620	J	[kgcm²]	156.000
17.600	J	[kgcm²]	146.000
19.948	J	[kgcm²]	111.000
22.476	J	[kgcm²]	105.000
24.456	J	[kgcm²]	83.200
27.556	J	[kgcm²]	79.400
32.344	J	[kgcm²]	52.900
36.444	J	[kgcm²]	50.700
39.642	J	[kgcm²]	38.000
44.667	J	[kgcm²]	36.600
52.067	J	[kgcm²]	24.600
58.667	J	[kgcm²]	23.800
63.190	J	[kgcm²]	18.000
71.200	J	[kgcm²]	17.400
79.875	J	[kgcm²]	11.800
90.000	J	[kgcm²]	11.500

► The moments of inertia relate to the drive shaft of the gearbox.
► The total moment of inertia is calculated by adding the values of the gearbox, motor and accessories.

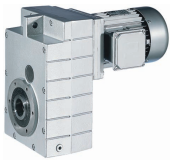

Moments of inertia

GFL□□-3

► Moment of inertia (J) depending on ratio i

Gearbox			GFL05
61.653	J	[kgcm²]	0.202
78.639	J	[kgcm²]	0.145
90.123	J	[kgcm²]	0.197
101.547	J	[kgcm²]	0.196
114.952	J	[kgcm²]	0.142
129.524	J	[kgcm²]	0.141
140.817	J	[kgcm²]	0.109
158.667	J	[kgcm²]	0.109
177.027	J	[kgcm²]	0.073
199.467	J	[kgcm²]	0.073
227.989	J	[kgcm²]	0.051
256.889	J	[kgcm²]	0.050
288.948	J	[kgcm²]	0.033
325.576	J	[kgcm²]	0.033
362.100	J	[kgcm²]	0.023
408.000	J	[kgcm²]	0.023
477.052	J	[kgcm²]	0.014
537.524	J	[kgcm²]	0.014

Gearbox			GFL06
66.213	J	[kgcm²]	0.292
72.000	J	[kgcm²]	0.264
81.111	J	[kgcm²]	0.259
88.200	J	[kgcm²]	0.190
99.361	J	[kgcm²]	0.187
116.571	J	[kgcm²]	0.091
131.323	J	[kgcm²]	0.208
144.320	J	[kgcm²]	0.110
162.583	J	[kgcm²]	0.109
179.520	J	[kgcm²]	0.102
202.237	J	[kgcm²]	0.101
231.200	J	[kgcm²]	0.068
260.457	J	[kgcm²]	0.067
293.018	J	[kgcm²]	0.044
299.200	J	[kgcm²]	0.064
367.200	J	[kgcm²]	0.030
413.667	J	[kgcm²]	0.030
475.200	J	[kgcm²]	0.029
535.333	J	[kgcm²]	0.028
576.720	J	[kgcm²]	0.028
649.700	J	[kgcm²]	0.028
759.806	J	[kgcm²]	0.017
855.954	J	[kgcm²]	0.017

Gearbox			GFL07
65.306	J	[kgcm²]	0.790
72.452	J	[kgcm²]	0.894
81.636	J	[kgcm²]	0.880
92.413	J	[kgcm²]	0.609
104.127	J	[kgcm²]	0.601
113.206	J	[kgcm²]	0.448
127.556	J	[kgcm²]	0.442
147.347	J	[kgcm²]	0.275
166.025	J	[kgcm²]	0.271
183.285	J	[kgcm²]	0.194
206.519	J	[kgcm²]	0.192
224.636	J	[kgcm²]	0.180
253.111	J	[kgcm²]	0.179
290.706	J	[kgcm²]	0.112
327.556	J	[kgcm²]	0.111
352.811	J	[kgcm²]	0.081
397.533	J	[kgcm²]	0.080
430.222	J	[kgcm²]	0.104
522.133	J	[kgcm²]	0.075
562.391	J	[kgcm²]	0.073
633.680	J	[kgcm²]	0.073
718.786	J	[kgcm²]	0.047
809.900	J	[kgcm²]	0.046

Gearbox			GFL09
63.326	J	[kgcm²]	2.344
73.173	J	[kgcm²]	2.472
82.465	J	[kgcm²]	2.428
93.333	J	[kgcm²]	1.679
105.185	J	[kgcm²]	1.651
114.333	J	[kgcm²]	1.230
128.852	J	[kgcm²]	1.212
148.815	J	[kgcm²]	0.773
167.712	J	[kgcm²]	0.762
185.111	J	[kgcm²]	0.548
208.617	J	[kgcm²]	0.541
224.778	J	[kgcm²]	0.505
253.321	J	[kgcm²]	0.500
290.889	J	[kgcm²]	0.313
327.827	J	[kgcm²]	0.310
353.033	J	[kgcm²]	0.226
397.863	J	[kgcm²]	0.224
424.247	J	[kgcm²]	0.286
514.881	J	[kgcm²]	0.208
554.470	J	[kgcm²]	0.201
624.879	J	[kgcm²]	0.200
700.875	J	[kgcm²]	0.130
789.875	J	[kgcm²]	0.129

► The moments of inertia relate to the drive shaft of the gearbox.
► The total moment of inertia is calculated by adding the values of the gearbox, motor and accessories.

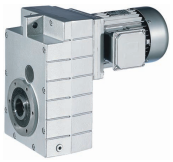

Moments of inertia

GFL□□-3

► Moment of inertia (J) depending on ratio i

Gearbox			GFL11
65.306	J	[kgcm²]	6.967
73.335	J	[kgcm²]	7.844
82.631	J	[kgcm²]	7.707
93.540	J	[kgcm²]	5.050
105.397	J	[kgcm²]	4.965
114.586	J	[kgcm²]	3.712
129.111	J	[kgcm²]	3.656
149.144	J	[kgcm²]	2.299
168.049	J	[kgcm²]	2.265
182.792	J	[kgcm²]	1.661
205.963	J	[kgcm²]	1.639
224.636	J	[kgcm²]	1.515
253.111	J	[kgcm²]	1.501
267.259	J	[kgcm²]	1.865
327.556	J	[kgcm²]	1.373
358.077	J	[kgcm²]	0.679
403.467	J	[kgcm²]	0.673
430.222	J	[kgcm²]	0.853
522.133	J	[kgcm²]	0.623
562.391	J	[kgcm²]	0.599
633.680	J	[kgcm²]	0.596
710.888	J	[kgcm²]	0.385
801.000	J	[kgcm²]	0.384

Gearbox			GFL14
64.296	J	[kgcm²]	26.316
68.708	J	[kgcm²]	19.862
77.418	J	[kgcm²]	19.381
85.037	J	[kgcm²]	21.590
104.889	J	[kgcm²]	9.324
114.126	J	[kgcm²]	8.318
128.593	J	[kgcm²]	8.144
136.889	J	[kgcm²]	16.779
156.148	J	[kgcm²]	5.917
170.074	J	[kgcm²]	6.962
202.074	J	[kgcm²]	3.692
224.636	J	[kgcm²]	4.742
253.111	J	[kgcm²]	4.697
273.778	J	[kgcm²]	5.759
332.444	J	[kgcm²]	4.300
352.811	J	[kgcm²]	2.163
397.533	J	[kgcm²]	2.145
430.222	J	[kgcm²]	2.727
522.133	J	[kgcm²]	1.984
562.391	J	[kgcm²]	1.910
633.680	J	[kgcm²]	1.903
710.888	J	[kgcm²]	1.259
801.000	J	[kgcm²]	1.254

► The moments of inertia relate to the drive shaft of the gearbox.
► The total moment of inertia is calculated by adding the values of the gearbox, motor and accessories.

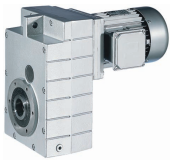

Weights, 4-pole motors

2-stage gearboxes

				m200								
				-P132L4	-P132M4	-P160L4	-P160M4	-P180L4	-P180M4	-P180V4	-P225L4	-P225M4
GFL	GFL06	m	[kg]	94	92							
	GFL07	m	[kg]	121	119	163	156					
	GFL09	m	[kg]	168	166	210	202	246	236	294		
	GFL11	m	[kg]	251	249	293	286	329	320	377		
	GFL14	m	[kg]	392	390	434	427	470	461	518	617	597

3-stage gearboxes

				m200			
				-P132L4	-P132M4	-P160L4	-P160M4
GFL	GFL11	m	[kg]	274	272		
	GFL14	m	[kg]	430	428	472	465

► Weights with oil filling for mounting position A; all values are approximate.
The weights relate to the basic version. Bear in mind that additional weights may be needed, e.g. for motor options.

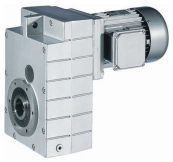

Additional weights for gearboxes

Product	Mass			
	Solid shaft	Shrink disc	Foot	Flange
	m	m	m	m
	[kg]	[kg]	[kg]	[kg]
GFL06	2.50	1.00	2.50	7.00
GFL07	5.00	1.50	4.00	11.0
GFL09	8.00	3.00	7.00	16.0
GFL11	16.0	5.00	14.0	24.0
GFL14	33.0	11.0	23.0	33.0

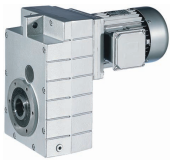

Selection tables, 4-pole motors

50 Hz: P_N = 5.5 kW

2-stage gearboxes

Mains operation 400 V, 50 Hz			i	Product		
n_2 [r/min]	M_2 [Nm]	c		GFL	m200	
399	128	2.7	3.675	GFL06	-P132M4	46
316	161	4.0	4.643	GFL07	-P132M4	50
281	181	2.3	5.211	GFL06	-P132M4	46
255	200	2.2	5.750	GFL06	-P132M4	46
229	223	3.0	6.400	GFL07	-P132M4	50
227	224	1.6	6.450	GFL06	-P132M4	46
205	249	1.7	7.147	GFL06	-P132M4	46
174	292	2.1	8.400	GFL06	-P132M4	46
156	326	3.1	9.379	GFL07	-P132M4	50
155	329	1.8	9.463	GFL06	-P132M4	46
151	338	2.9	9.714	GFL07	-P132M4	50
145	351	1.3	10.092	GFL06	-P132M4	46
127	401	1.6	11.520	GFL06	-P132M4	46
127	401	2.7	11.538	GFL07	-P132M4	50
113	451	1.3	12.978	GFL06	-P132M4	46
113	452	2.4	13.000	GFL07	-P132M4	50
103	494	2.3	14.200	GFL07	-P132M4	50
99	513	1.3	14.743	GFL06	-P132M4	46
92	553	2.1	15.904	GFL07	-P132M4	50
91	561	1.2	16.128	GFL06	-P132M4	46
82	623	1.9	17.920	GFL07	-P132M4	50
81	632	1.0	18.169	GFL06	-P132M4	46
72	706	1.8	20.286	GFL07	-P132M4	50
71	716	0.9	20.571	GFL06	-P132M4	46
64	795	1.6	22.857	GFL07	-P132M4	50
61	839	3.3	24.111	GFL09	-P132M4	54
59	864	1.6	24.850	GFL07	-P132M4	50
54	945	2.9	27.173	GFL09	-P132M4	54
52	974	1.3	28.000	GFL07	-P132M4	50
45	1125	1.2	32.344	GFL07	-P132M4	50
45	1136	2.6	32.667	GFL09	-P132M4	54
40	1268	1.0	36.444	GFL07	-P132M4	50
40	1281	2.4	36.815	GFL09	-P132M4	54
37	1380	2.3	39.667	GFL09	-P132M4	54
33	1555	2.0	44.704	GFL09	-P132M4	54
32	1577	3.1	45.333	GFL11	-P132M4	58
28	1811	2.9	52.067	GFL11	-P132M4	58

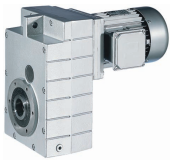

Selection tables, 4-pole motors

50 Hz: P_N = 5.5 kW

2-stage gearboxes

Mains operation 400 V, 50 Hz			i	Product		
n_2 [r/min]	M_2 [Nm]	c		GFL	m200	
25	2041	2.6	58.667	GFL11	-P132M4	58
23	2198	2.5	63.190	GFL11	-P132M4	58
21	2477	2.3	71.200	GFL11	-P132M4	58
18	2778	2.5	79.875	GFL14	-P132M4	66
16	3130	2.5	90.000	GFL14	-P132M4	66

3-stage gearboxes

Mains operation 400 V, 50 Hz			i	Product		
n_2 [r/min]	M_2 [Nm]	c		GFL	m200	
23	2203	2.6	64.296	GFL14	-P132M4	70
22	2237	1.3	65.306	GFL11	-P132M4	62
21	2354	2.3	68.708	GFL14	-P132M4	70
20	2513	1.1	73.335	GFL11	-P132M4	62
19	2652	2.3	77.418	GFL14	-P132M4	70
18	2831	1.1	82.631	GFL11	-P132M4	62
17	2913	2.2	85.037	GFL14	-P132M4	70
16	3205	1.0	93.540	GFL11	-P132M4	62
14	3594	1.9	104.889	GFL14	-P132M4	70
14	3611	1.0	105.397	GFL11	-P132M4	62
13	3910	1.7	114.126	GFL14	-P132M4	70
13	3926	0.9	114.586	GFL11	-P132M4	62
11	4406	1.7	128.593	GFL14	-P132M4	70
11	4424	0.9	129.111	GFL11	-P132M4	62
11	4690	1.6	136.889	GFL14	-P132M4	70
9.4	5350	1.5	156.148	GFL14	-P132M4	70
8.6	5827	1.4	170.074	GFL14	-P132M4	70
6.5	7696	1.1	224.636	GFL14	-P132M4	70
5.8	8672	1.1	253.111	GFL14	-P132M4	70
5.4	9380	1.0	273.778	GFL14	-P132M4	70
4.4	11390	0.9	332.444	GFL14	-P132M4	70

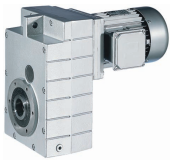

Selection tables, 4-pole motors

50 Hz: P_N = 7.5 kW

2-stage gearboxes

Mains operation 400 V, 50 Hz			i	Product		
n_2 [r/min]	M_2 [Nm]	c		GFL	m200	
397	175	1.9	3.675	GFL06	-P132L4	46
315	221	3.0	4.643	GFL07	-P132L4	50
280	248	1.7	5.211	GFL06	-P132L4	46
254	274	1.6	5.750	GFL06	-P132L4	46
228	305	2.2	6.400	GFL07	-P132L4	50
226	307	1.2	6.450	GFL06	-P132L4	46
204	340	1.3	7.147	GFL06	-P132L4	46
204	340	2.7	7.150	GFL07	-P132L4	50
175	396	2.5	8.324	GFL07	-P132L4	50
174	400	1.5	8.400	GFL06	-P132L4	46
156	446	2.2	9.379	GFL07	-P132L4	50
154	450	1.3	9.463	GFL06	-P132L4	46
150	462	2.1	9.714	GFL07	-P132L4	50
145	480	1.0	10.092	GFL06	-P132L4	46
127	548	1.2	11.520	GFL06	-P132L4	46
127	549	2.0	11.538	GFL07	-P132L4	50
113	618	1.0	12.978	GFL06	-P132L4	46
112	619	1.8	13.000	GFL07	-P132L4	50
103	676	1.7	14.200	GFL07	-P132L4	50
99	702	0.9	14.743	GFL06	-P132L4	46
92	757	1.6	15.904	GFL07	-P132L4	50
91	768	0.8	16.128	GFL06	-P132L4	46
89	777	3.2	16.333	GFL09	-P132L4	54
82	853	1.4	17.920	GFL07	-P132L4	50
79	876	2.8	18.407	GFL09	-P132L4	54
74	936	2.7	19.667	GFL09	-P132L4	54
72	965	1.3	20.286	GFL07	-P132L4	50
66	1055	2.5	22.164	GFL09	-P132L4	54
64	1088	1.1	22.857	GFL07	-P132L4	50
61	1148	2.4	24.111	GFL09	-P132L4	54
59	1183	1.1	24.850	GFL07	-P132L4	50
54	1293	2.1	27.173	GFL09	-P132L4	54
52	1333	0.9	28.000	GFL07	-P132L4	50
52	1333	3.2	28.000	GFL11	-P132L4	58
45	1539	0.9	32.344	GFL07	-P132L4	50
45	1555	1.9	32.667	GFL09	-P132L4	54
45	1558	3.0	32.739	GFL11	-P132L4	58

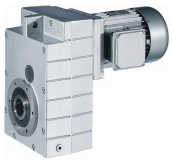

Selection tables, 4-pole motors

50 Hz: P_N = 7.5 kW

2-stage gearboxes

Mains operation 400 V, 50 Hz			i	Product		
n_2 [r/min]	M_2 [Nm]	c		GFL	m200	
40	1752	1.7	36.815	GFL09	-P132L4	54
40	1756	2.6	36.889	GFL11	-P132L4	58
37	1888	1.7	39.667	GFL09	-P132L4	54
36	1915	2.6	40.233	GFL11	-P132L4	58
33	2128	1.4	44.704	GFL09	-P132L4	54
32	2158	2.3	45.333	GFL11	-P132L4	58
28	2478	3.1	52.067	GFL14	-P132L4	66
28	2478	2.1	52.067	GFL11	-P132L4	58
25	2792	3.1	58.667	GFL14	-P132L4	66
25	2792	1.9	58.667	GFL11	-P132L4	58
23	3007	2.6	63.190	GFL14	-P132L4	66
21	3389	2.6	71.200	GFL14	-P132L4	66

3-stage gearboxes

Mains operation 400 V, 50 Hz			i	Product		
n_2 [r/min]	M_2 [Nm]	c		GFL	m200	
23	3014	1.9	64.296	GFL14	-P132L4	70
22	3062	0.9	65.306	GFL11	-P132L4	62
21	3221	1.7	68.708	GFL14	-P132L4	70
20	3438	0.8	73.335	GFL11	-P132L4	62
19	3629	1.7	77.418	GFL14	-P132L4	70
18	3874	0.8	82.631	GFL11	-P132L4	62
17	3987	1.6	85.037	GFL14	-P132L4	70
14	4917	1.4	104.889	GFL14	-P132L4	70
13	5350	1.3	114.126	GFL14	-P132L4	70
11	6028	1.3	128.593	GFL14	-P132L4	70
11	6417	1.2	136.889	GFL14	-P132L4	70
9.4	7320	1.1	156.148	GFL14	-P132L4	70
8.6	7973	1.1	170.074	GFL14	-P132L4	70
6.5	10531	0.8	224.636	GFL14	-P132L4	70
5.8	11866	0.8	253.111	GFL14	-P132L4	70

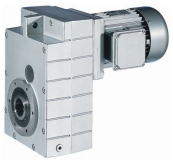

Selection tables, 4-pole motors

50 Hz: P_N = 11.0 kW

2-stage gearboxes

Mains operation 400 V, 50 Hz			i	Product		
n_2 [r/min]	M_2 [Nm]	c		GFL	m200	
439	232	2.8	3.350	GFL07	-P160M4	50
317	322	2.0	4.643	GFL07	-P160M4	50
285	358	2.4	5.159	GFL07	-P160M4	50
258	395	2.3	5.695	GFL07	-P160M4	50
230	444	1.5	6.400	GFL07	-P160M4	50
206	496	1.9	7.150	GFL07	-P160M4	50
177	577	1.7	8.324	GFL07	-P160M4	50
157	650	1.5	9.379	GFL07	-P160M4	50
151	673	1.4	9.714	GFL07	-P160M4	50
132	774	3.0	11.167	GFL09	-P160M4	54
127	800	1.4	11.538	GFL07	-P160M4	50
119	853	2.6	12.307	GFL09	-P160M4	54
113	901	1.2	13.000	GFL07	-P160M4	50
104	984	1.2	14.200	GFL07	-P160M4	50
103	994	2.4	14.333	GFL09	-P160M4	54
92	1103	1.1	15.904	GFL07	-P160M4	50
90	1132	2.2	16.333	GFL09	-P160M4	54
82	1242	1.0	17.920	GFL07	-P160M4	50
82	1242	3.1	17.920	GFL11	-P160M4	58
80	1276	1.9	18.407	GFL09	-P160M4	54
75	1363	1.9	19.667	GFL09	-P160M4	54
73	1406	2.9	20.286	GFL11	-P160M4	58
66	1537	1.7	22.164	GFL09	-P160M4	54
64	1585	2.6	22.857	GFL11	-P160M4	58
61	1672	1.6	24.111	GFL09	-P160M4	54
59	1723	2.5	24.850	GFL11	-P160M4	58
54	1884	1.5	27.173	GFL09	-P160M4	54
53	1941	2.2	28.000	GFL11	-P160M4	58
45	2270	2.0	32.739	GFL11	-P160M4	58
40	2557	1.8	36.889	GFL11	-P160M4	58
37	2789	1.8	40.233	GFL11	-P160M4	58
32	3143	1.6	45.333	GFL11	-P160M4	58
28	3610	2.8	52.067	GFL14	-P160M4	66
25	4067	2.8	58.667	GFL14	-P160M4	66
23	4381	2.3	63.190	GFL14	-P160M4	66
21	4936	2.2	71.200	GFL14	-P160M4	66

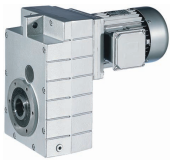

Selection tables, 4-pole motors

50 Hz: P_N = 11.0 kW

3-stage gearboxes

Mains operation 400 V, 50 Hz			i	Product		
n_2 [r/min]	M_2 [Nm]	c		GFL	m200	
23	4391	1.3	64.296	GFL14	-P160M4	70
21	4692	1.2	68.708	GFL14	-P160M4	70
19	5287	1.2	77.418	GFL14	-P160M4	70
17	5807	1.1	85.037	GFL14	-P160M4	70

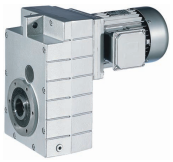

Selection tables, 4-pole motors

50 Hz: P_N = 15.0 kW

2-stage gearboxes

Mains operation 400 V, 50 Hz			i	Product		
n_2 [r/min]	M_2 [Nm]	c		GFL	m200	
439	317	2.0	3.350	GFL07	-P160L4	50
317	439	1.5	4.643	GFL07	-P160L4	50
285	488	1.7	5.159	GFL07	-P160L4	50
258	538	1.7	5.695	GFL07	-P160L4	50
230	605	1.1	6.400	GFL07	-P160L4	50
214	649	3.2	6.864	GFL09	-P160L4	54
206	676	1.4	7.150	GFL07	-P160L4	50
197	706	3.1	7.466	GFL09	-P160L4	54
163	852	2.6	9.010	GFL09	-P160L4	54
151	918	1.1	9.714	GFL07	-P160L4	50
150	926	2.5	9.799	GFL09	-P160L4	54
132	1056	2.2	11.167	GFL09	-P160L4	54
119	1163	1.9	12.307	GFL09	-P160L4	54
118	1180	2.9	12.480	GFL11	-P160L4	58
103	1355	1.8	14.333	GFL09	-P160L4	54
101	1374	2.7	14.538	GFL11	-P160L4	58
92	1504	2.5	15.904	GFL11	-P160L4	58
90	1544	1.6	16.333	GFL09	-P160L4	54
82	1694	2.2	17.920	GFL11	-P160L4	58
80	1740	1.4	18.407	GFL09	-P160L4	54
75	1859	1.4	19.667	GFL09	-P160L4	54
73	1918	2.1	20.286	GFL11	-P160L4	58
66	2095	1.3	22.164	GFL09	-P160L4	54
64	2161	1.9	22.857	GFL11	-P160L4	58
61	2279	1.2	24.111	GFL09	-P160L4	54
59	2349	1.8	24.850	GFL11	-P160L4	58
54	2569	1.1	27.173	GFL09	-P160L4	54
53	2647	1.6	28.000	GFL11	-P160L4	58
45	3058	3.1	32.344	GFL14	-P160L4	66
45	3095	1.5	32.739	GFL11	-P160L4	58
40	3445	3.1	36.444	GFL14	-P160L4	66
40	3487	1.3	36.889	GFL11	-P160L4	58
37	3748	2.6	39.642	GFL14	-P160L4	66
37	3804	1.3	40.233	GFL11	-P160L4	58
33	4223	2.6	44.667	GFL14	-P160L4	66
32	4286	1.1	45.333	GFL11	-P160L4	58
28	4922	2.1	52.067	GFL14	-P160L4	66

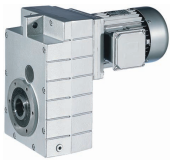

Selection tables, 4-pole motors

50 Hz: P_N = 15.0 kW

2-stage gearboxes

Mains operation 400 V, 50 Hz			i	Product		
n_2 [r/min]	M_2 [Nm]	c		GFL	m200	
25	5546	2.0	58.667	GFL14	-P160L4	66
23	5974	1.7	63.190	GFL14	-P160L4	66
21	6731	1.6	71.200	GFL14	-P160L4	66

3-stage gearboxes

Mains operation 400 V, 50 Hz			i	Product		
n_2 [r/min]	M_2 [Nm]	c		GFL	m200	
23	5987	0.9	64.296	GFL14	-P160L4	70
21	6398	0.9	68.708	GFL14	-P160L4	70
19	7209	0.9	77.418	GFL14	-P160L4	70

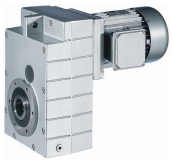

Selection tables, 4-pole motors

50 Hz: P_N = 18.5 kW

2-stage gearboxes

Mains operation 400 V, 50 Hz			i	Product		
n_2 [r/min]	M_2 [Nm]	c		GFL	m200	
213	806	2.6	6.864	GFL09	-P180M4	54
196	876	2.5	7.466	GFL09	-P180M4	54
162	1058	2.1	9.010	GFL09	-P180M4	54
149	1150	2.0	9.799	GFL09	-P180M4	54
136	1259	3.0	10.720	GFL11	-P180M4	58
131	1311	1.8	11.167	GFL09	-P180M4	54
102	1683	1.4	14.333	GFL09	-P180M4	54
100	1707	2.2	14.538	GFL11	-P180M4	58
92	1867	2.0	15.904	GFL11	-P180M4	58
89	1918	1.3	16.333	GFL09	-P180M4	54
82	2104	1.8	17.920	GFL11	-P180M4	58
79	2161	1.2	18.407	GFL09	-P180M4	54
74	2309	1.1	19.667	GFL09	-P180M4	54
72	2382	1.7	20.286	GFL11	-P180M4	58
66	2602	1.0	22.164	GFL09	-P180M4	54
64	2683	1.5	22.857	GFL11	-P180M4	58
61	2831	1.0	24.111	GFL09	-P180M4	54
60	2871	3.1	24.456	GFL14	-P180M4	66
59	2917	1.5	24.850	GFL11	-P180M4	58
54	3190	0.9	27.173	GFL09	-P180M4	54
53	3235	3.1	27.556	GFL14	-P180M4	66
52	3287	1.3	28.000	GFL11	-P180M4	58
45	3797	2.5	32.344	GFL14	-P180M4	66
45	3843	1.2	32.739	GFL11	-P180M4	58
40	4279	2.5	36.444	GFL14	-P180M4	66
40	4331	1.1	36.889	GFL11	-P180M4	58
37	4654	2.1	39.642	GFL14	-P180M4	66
36	4723	1.0	40.233	GFL11	-P180M4	58
33	5244	2.1	44.667	GFL14	-P180M4	66
32	5322	0.9	45.333	GFL11	-P180M4	58
28	6113	1.7	52.067	GFL14	-P180M4	66
25	6887	1.6	58.667	GFL14	-P180M4	66

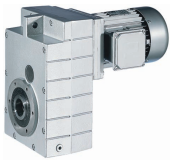

Selection tables, 4-pole motors

50 Hz: P_N = 22.0 kW

2-stage gearboxes

Mains operation 400 V, 50 Hz			i	Product		
n_2 [r/min]	M_2 [Nm]	c		GFL	m200	
213	955	2.2	6.864	GFL09	-P180L4	54
213	955	3.1	6.864	GFL11	-P180L4	58
196	1039	2.1	7.466	GFL09	-P180L4	54
196	1039	3.1	7.466	GFL11	-P180L4	58
167	1224	3.2	8.800	GFL14	-P180L4	66
163	1254	1.8	9.010	GFL09	-P180L4	54
163	1254	2.9	9.010	GFL11	-P180L4	58
153	1332	3.2	9.571	GFL14	-P180L4	66
150	1363	1.7	9.799	GFL09	-P180L4	54
150	1363	2.8	9.799	GFL11	-P180L4	58
137	1492	2.6	10.720	GFL11	-P180L4	58
131	1554	1.5	11.167	GFL09	-P180L4	54
103	1976	3.2	14.200	GFL14	-P180L4	66
101	2023	1.8	14.538	GFL11	-P180L4	58
94	2173	3.1	15.620	GFL14	-P180L4	66
92	2213	1.7	15.904	GFL11	-P180L4	58
90	2272	1.1	16.333	GFL09	-P180L4	54
83	2449	3.1	17.600	GFL14	-P180L4	66
75	2736	0.9	19.667	GFL09	-P180L4	54
73	2775	2.9	19.948	GFL14	-P180L4	66
72	2822	1.4	20.286	GFL11	-P180L4	58
65	3127	2.9	22.476	GFL14	-P180L4	66
64	3180	1.3	22.857	GFL11	-P180L4	58
61	3355	0.8	24.111	GFL09	-P180L4	54
60	3403	2.6	24.456	GFL14	-P180L4	66
59	3457	1.2	24.850	GFL11	-P180L4	58
53	3834	2.6	27.556	GFL14	-P180L4	66
52	3896	1.1	28.000	GFL11	-P180L4	58
45	4500	2.1	32.344	GFL14	-P180L4	66
45	4555	1.0	32.739	GFL11	-P180L4	58
40	5071	2.1	36.444	GFL14	-P180L4	66
40	5132	0.9	36.889	GFL11	-P180L4	58
37	5515	1.8	39.642	GFL14	-P180L4	66
36	5598	0.9	40.233	GFL11	-P180L4	58
33	6215	1.8	44.667	GFL14	-P180L4	66
28	7244	1.4	52.067	GFL14	-P180L4	66
25	8162	1.4	58.667	GFL14	-P180L4	66

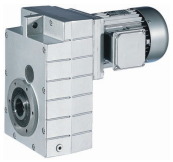

Selection tables, 4-pole motors

50 Hz: P_N = 30.0 kW

2-stage gearboxes

Mains operation 400 V, 50 Hz			i	Product		
n_2 [r/min]	M_2 [Nm]	c		GFL	m200	
164	1698	1.3	9.010	GFL09	-P180V4	54
164	1698	2.1	9.010	GFL11	-P180V4	58
151	1847	2.0	9.799	GFL11	-P180V4	58
138	2020	1.9	10.720	GFL11	-P180V4	58
132	2104	1.1	11.167	GFL09	-P180V4	54
74	3759	2.1	19.948	GFL14	-P180V4	66
66	4235	2.1	22.476	GFL14	-P180V4	66
60	4608	1.9	24.456	GFL14	-P180V4	66
54	5193	1.9	27.556	GFL14	-P180V4	66
46	6095	1.5	32.344	GFL14	-P180V4	66
41	6868	1.5	36.444	GFL14	-P180V4	66

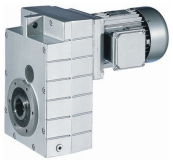

Selection tables, 4-pole motors

50 Hz: P_N = 37.0 kW

2-stage gearboxes

Mains operation 400 V, 50 Hz			i	Product		
n_2 [r/min]	M_2 [Nm]	c		GFL	m200	
74	4605	2.1	19.948	GFL14	-P225M4	66
66	5189	1.9	22.476	GFL14	-P225M4	66
61	5645	1.8	24.456	GFL14	-P225M4	66
54	6361	1.7	27.556	GFL14	-P225M4	66
46	7467	1.5	32.344	GFL14	-P225M4	66
41	8413	1.4	36.444	GFL14	-P225M4	66

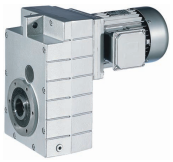

Selection tables, 4-pole motors

50 Hz: P_N = 45.0 kW

2-stage gearboxes

Mains operation 400 V, 50 Hz			i	Product		
n_2 [r/min]	M_2 [Nm]	c		GFL	m200	
61	6866	1.5	24.456	GFL14	-P225L4	66
46	9081	1.2	32.344	GFL14	-P225L4	66
41	10232	1.1	36.444	GFL14	-P225L4	66

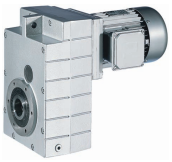

Dimensions, 4-pole motors

GFL06, 2-stage gearboxes

Dimensions with hollow shaft (HDR)
Dimensions with hollow shaft and centering (HCR)

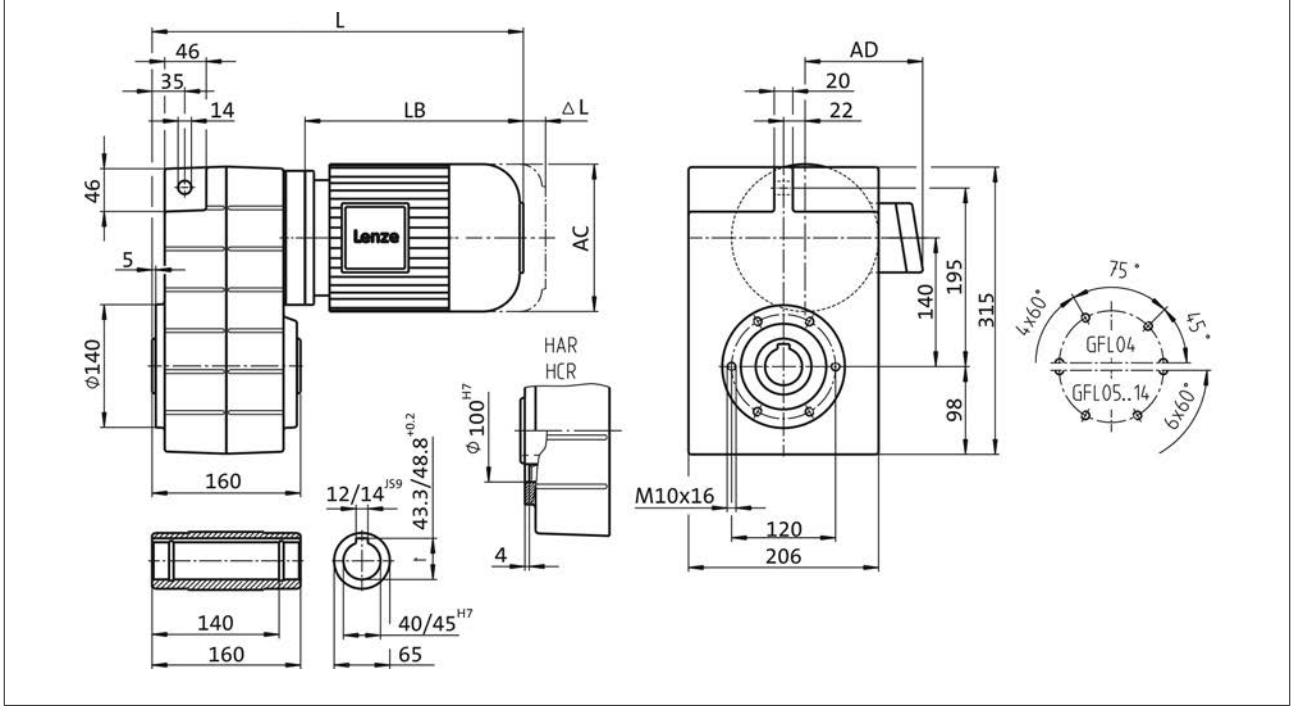

Product			m200	
			-P132L4	-P132M4
Dimensions				
Total length	**L**	**[mm]**	588	
Motor length	**LB**	**[mm]**	400	
Length of motor options	**Δ L**	**[mm]**	118	
Motor diameter	**AC**	**[mm]**	281	
Distance motor/connection	**AD**	**[mm]**	182	

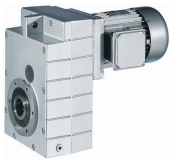

Dimensions, 4-pole motors

GFL06, 2-stage gearboxes

Dimensions with hollow shaft and flange (HCK)

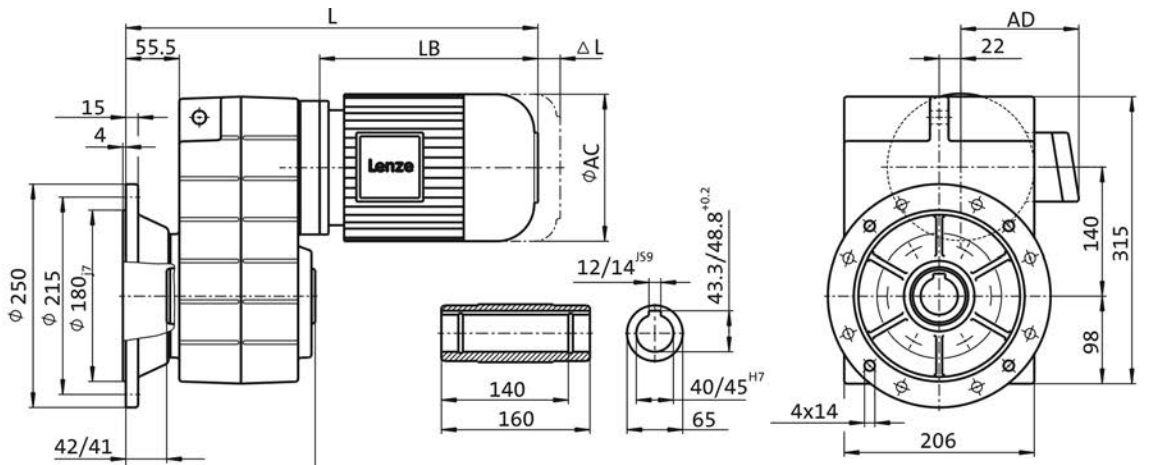

Product			m200	
			-P132L4	-P132M4
Dimensions				
Total length	**L**	**[mm]**	629	
Motor length	**LB**	**[mm]**	400	
Length of motor options	**Δ L**	**[mm]**	118	
Motor diameter	**AC**	**[mm]**	281	
Distance motor/connection	**AD**	**[mm]**	182	

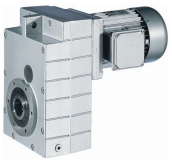

Dimensions, 4-pole motors

GFL06, 2-stage gearboxes

Dimensions with solid shaft (VDR)
Dimensions with hollow shaft and centering (VCR)

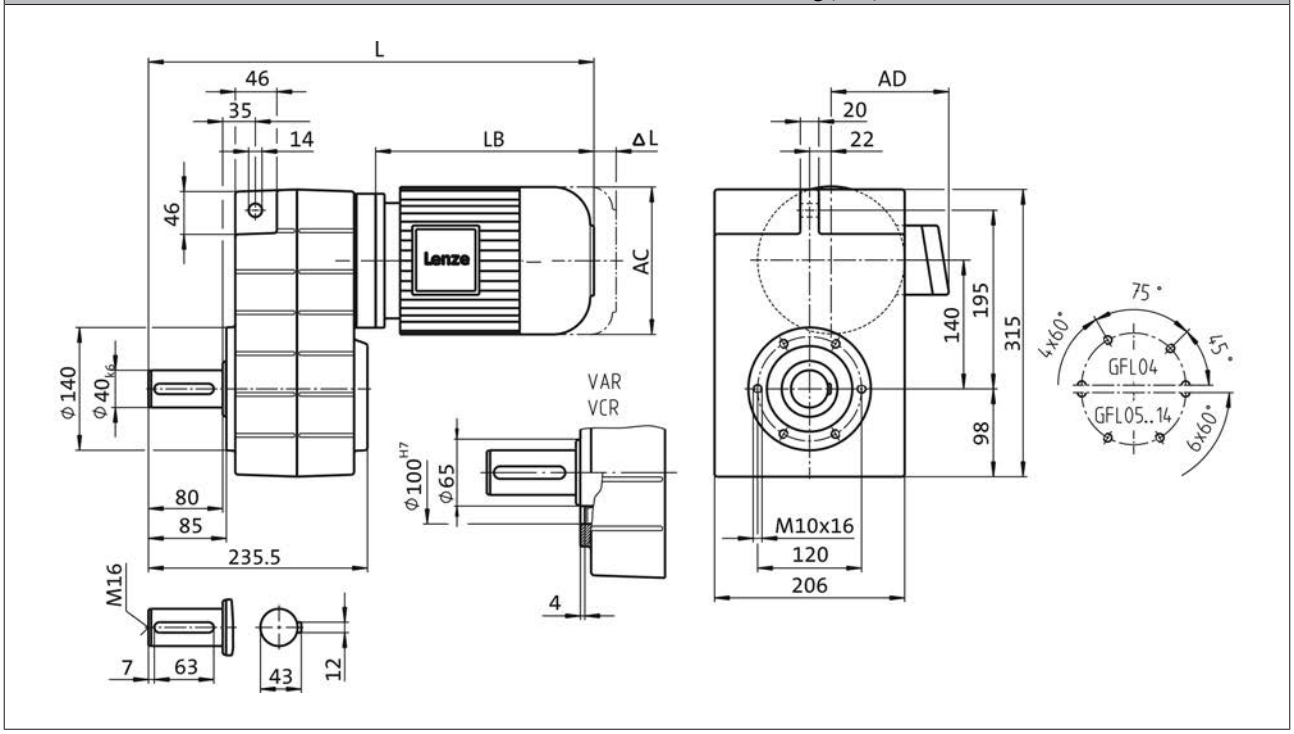

Product			m200	
			-P132L4	-P132M4
Dimensions				
Total length	**L**	**[mm]**	668	
Motor length	**LB**	**[mm]**	400	
Length of motor options	**Δ L**	**[mm]**	118	
Motor diameter	**AC**	**[mm]**	281	
Distance motor/connection	**AD**	**[mm]**	182	

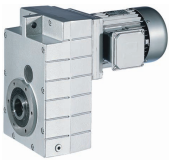

Dimensions, 4-pole motors

GFL06, 2-stage gearboxes

Dimensions with solid shaft and flange (VCK)

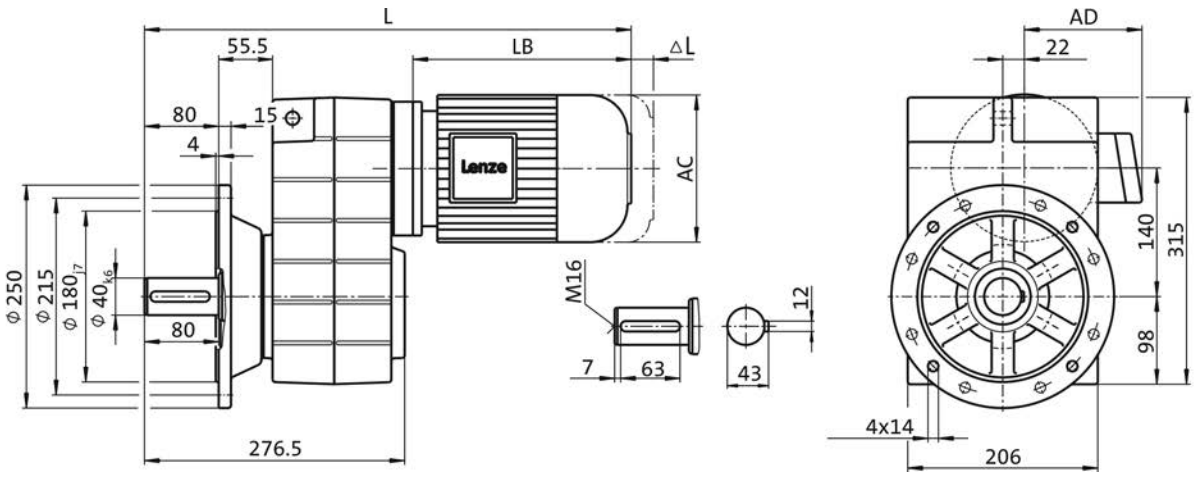

Product			m200	
			-P132L4	-P132M4
Dimensions				
Total length	**L**	**[mm]**	709	
Motor length	**LB**	**[mm]**	400	
Length of motor options	**Δ L**	**[mm]**	118	
Motor diameter	**AC**	**[mm]**	281	
Distance motor/connection	**AD**	**[mm]**	182	

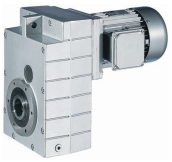

Dimensions, 4-pole motors

GFL07, 2-stage gearboxes

Dimensions with hollow shaft (HDR)
Dimensions with hollow shaft and centering (HCR)

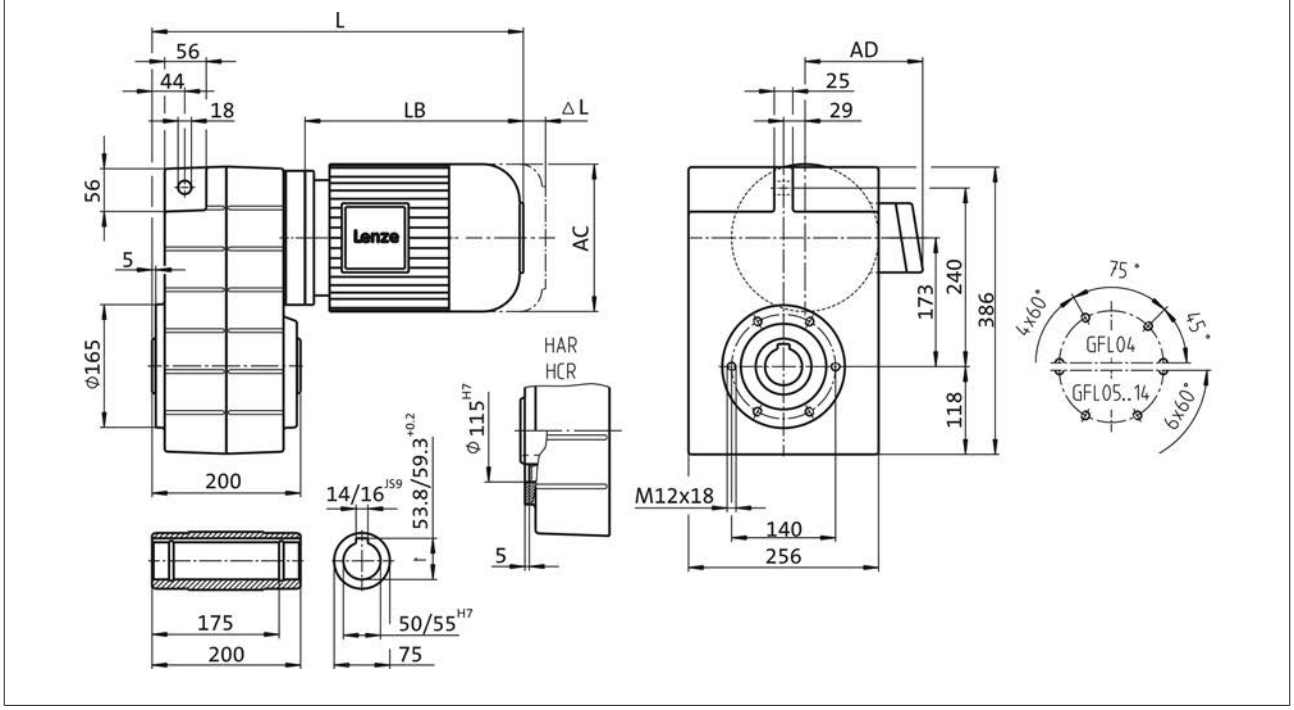

Product			m200			
			-P132L4	-P132M4	-P160L4	-P160M4
Dimensions						
Total length	**L**	**[mm]**	621		727	
Motor length	**LB**	**[mm]**	400		501	
Length of motor options	**Δ L**	**[mm]**	118		144	
Motor diameter	**AC**	**[mm]**	281		302	
Distance motor/connection	**AD**	**[mm]**	182		231	

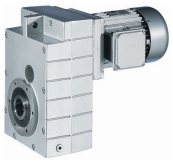

Dimensions, 4-pole motors

GFL07, 2-stage gearboxes

Dimensions with hollow shaft and flange (HCK)

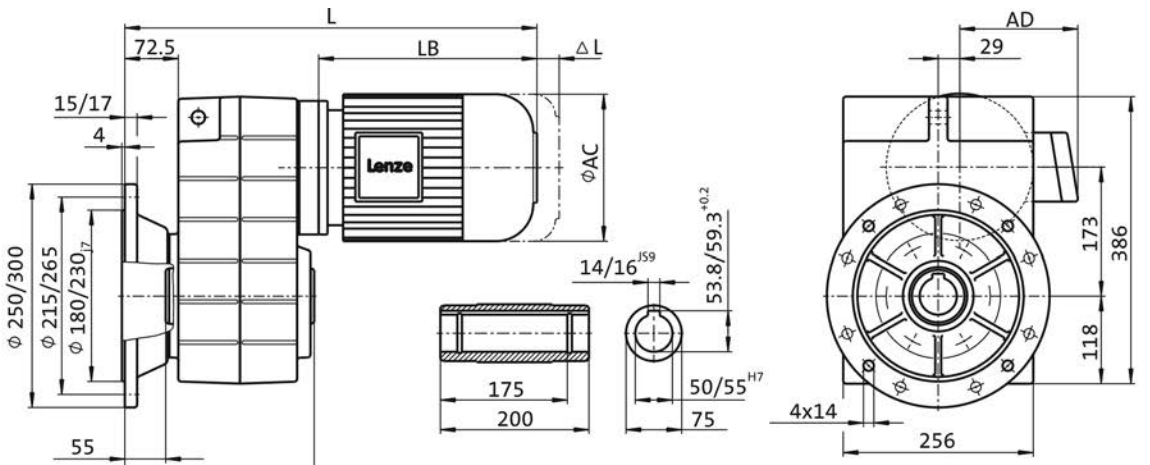

Product			m200			
			-P132L4	-P132M4	-P160L4	-P160M4
Dimensions						
Total length	**L**	**[mm]**	676		782	
Motor length	**LB**	**[mm]**	400		501	
Length of motor options	**Δ L**	**[mm]**	118		144	
Motor diameter	**AC**	**[mm]**	281		302	
Distance motor/connection	**AD**	**[mm]**	182		231	

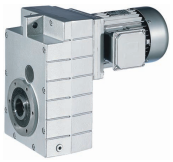

Dimensions, 4-pole motors

GFL07, 2-stage gearboxes

Dimensions with solid shaft (VDR)
Dimensions with hollow shaft and centering (VCR)

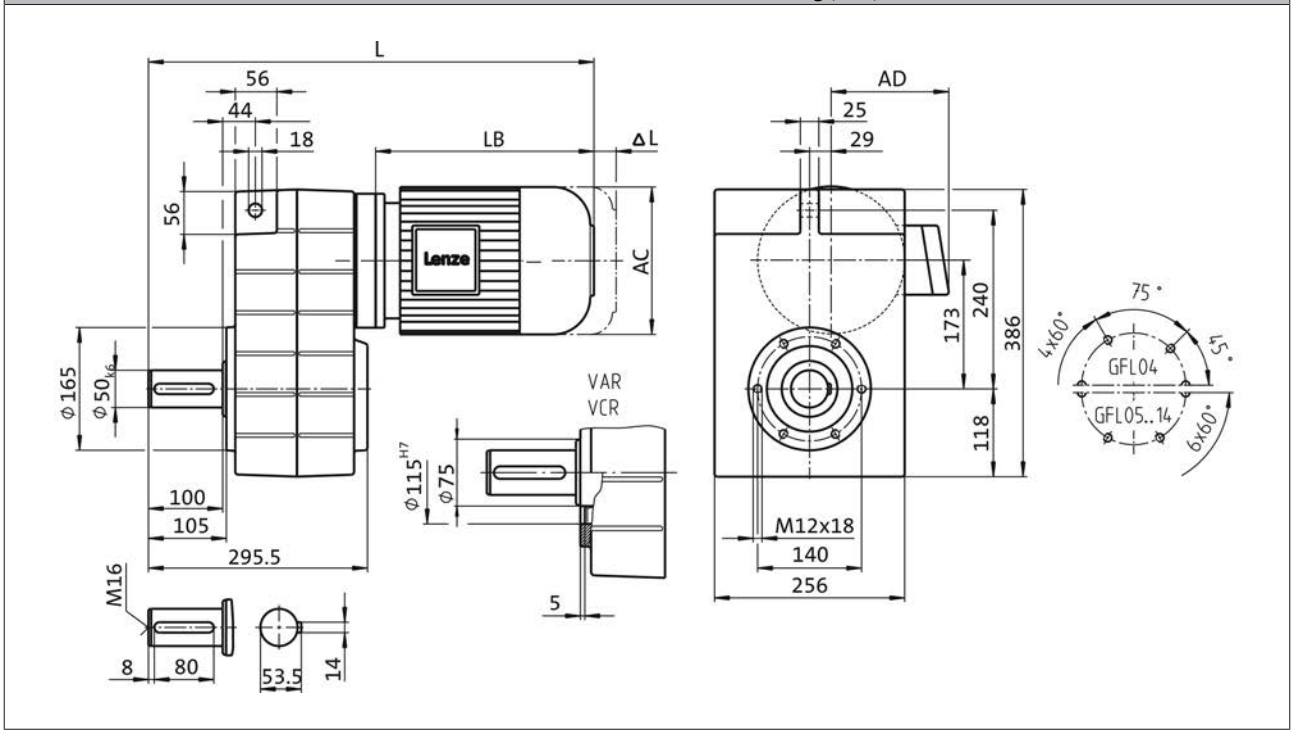

Product			m200			
			-P132L4	-P132M4	-P160L4	-P160M4
Dimensions						
Total length	**L**	**[mm]**	721		827	
Motor length	**LB**	**[mm]**	400		501	
Length of motor options	**Δ L**	**[mm]**	118		144	
Motor diameter	**AC**	**[mm]**	281		302	
Distance motor/connection	**AD**	**[mm]**	182		231	

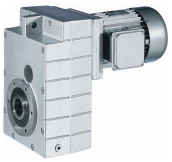

Dimensions, 4-pole motors

GFL07, 2-stage gearboxes

Dimensions with solid shaft and flange (VCK)

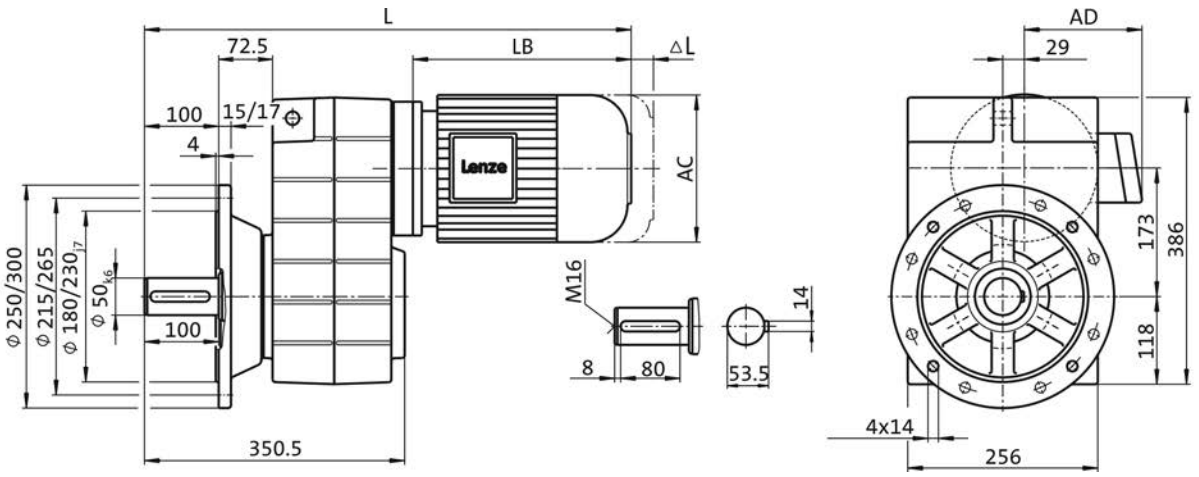

Product			m200			
			-P132L4	-P132M4	-P160L4	-P160M4
Dimensions						
Total length	**L**	**[mm]**	776		882	
Motor length	**LB**	**[mm]**	400		501	
Length of motor options	**Δ L**	**[mm]**	118		144	
Motor diameter	**AC**	**[mm]**	281		302	
Distance motor/connection	**AD**	**[mm]**	182		231	

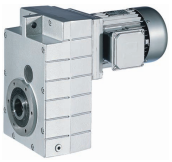

Dimensions, 4-pole motors

GFL09, 2-stage gearboxes

Dimensions with hollow shaft (HDR)
Dimensions with hollow shaft and centering (HCR)

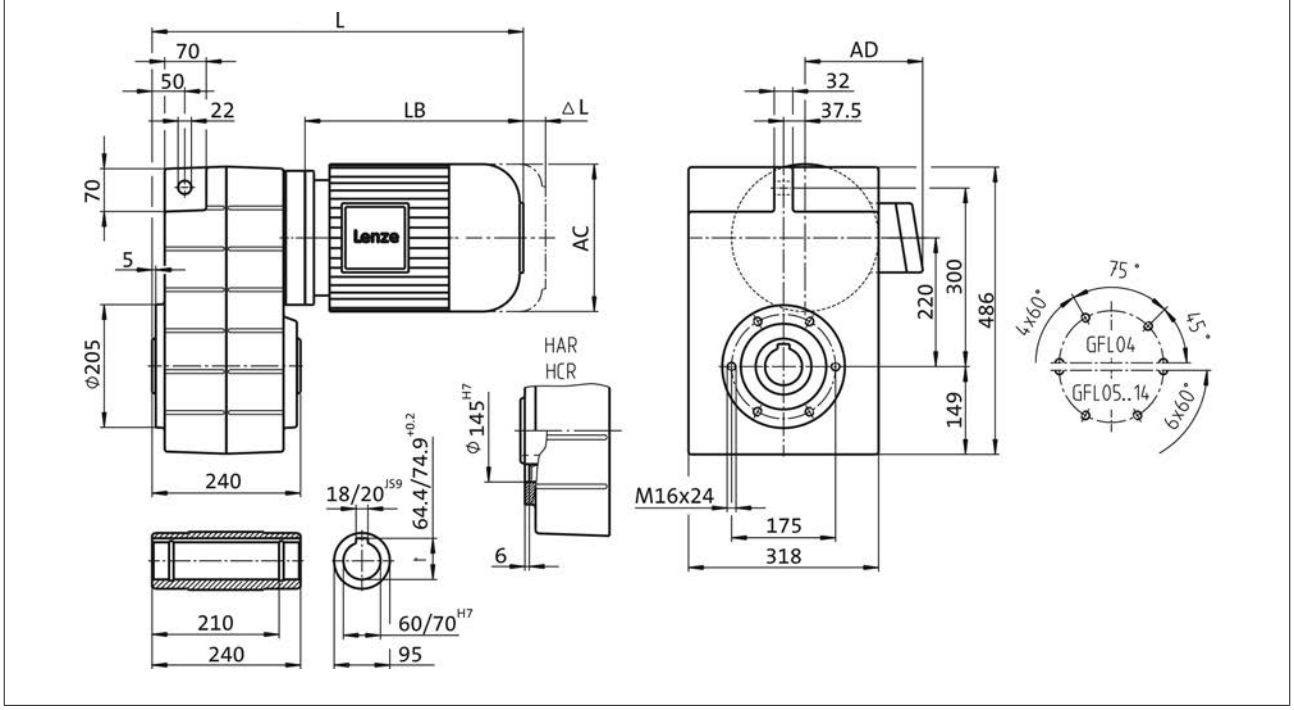

Product			m200						
			-P132L4	-P132M4	-P160L4	-P160M4	-P180L4	-P180M4	-P180V4
Dimensions									
Total length	**L**	**[mm]**	655		761		855		908
Motor length	**LB**	**[mm]**	400		501		595		648
Length of motor options	**Δ L**	**[mm]**	118		144		108		
Motor diameter	**AC**	**[mm]**	281		302		281		
Distance motor/connection	**AD**	**[mm]**	182		231		282		

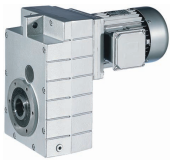

Dimensions, 4-pole motors

GFL09, 2-stage gearboxes

Dimensions with hollow shaft and flange (HCK)

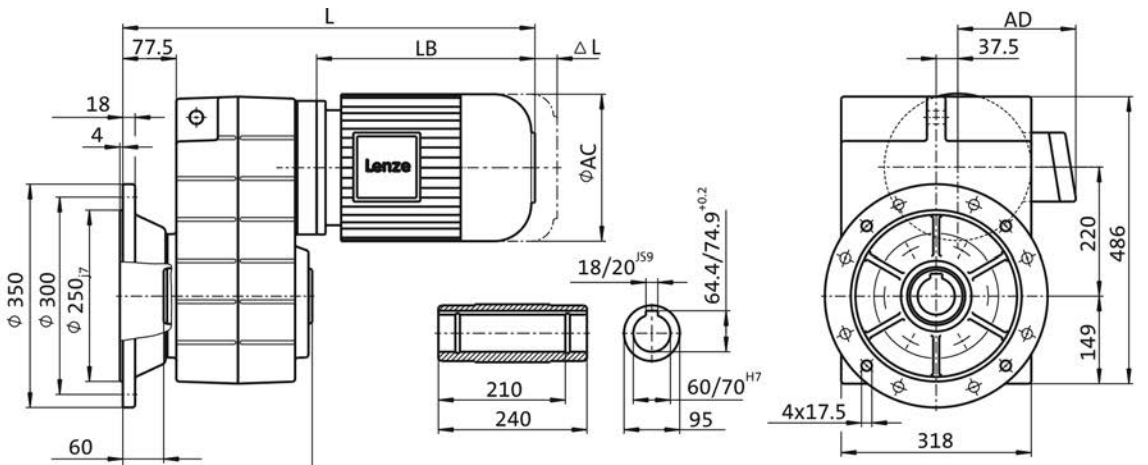

Product			m200						
			-P132L4	-P132M4	-P160L4	-P160M4	-P180L4	-P180M4	-P180V4
Dimensions									
Total length	**L**	**[mm]**	715		821		915		968
Motor length	**LB**	**[mm]**	400		501		595		648
Length of motor options	**Δ L**	**[mm]**	118		144		108		
Motor diameter	**AC**	**[mm]**	281		302		281		
Distance motor/connection	**AD**	**[mm]**	182		231		282		

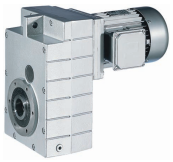

Dimensions, 4-pole motors

GFL09, 2-stage gearboxes

Dimensions with solid shaft (VDR)
Dimensions with hollow shaft and centering (VCR)

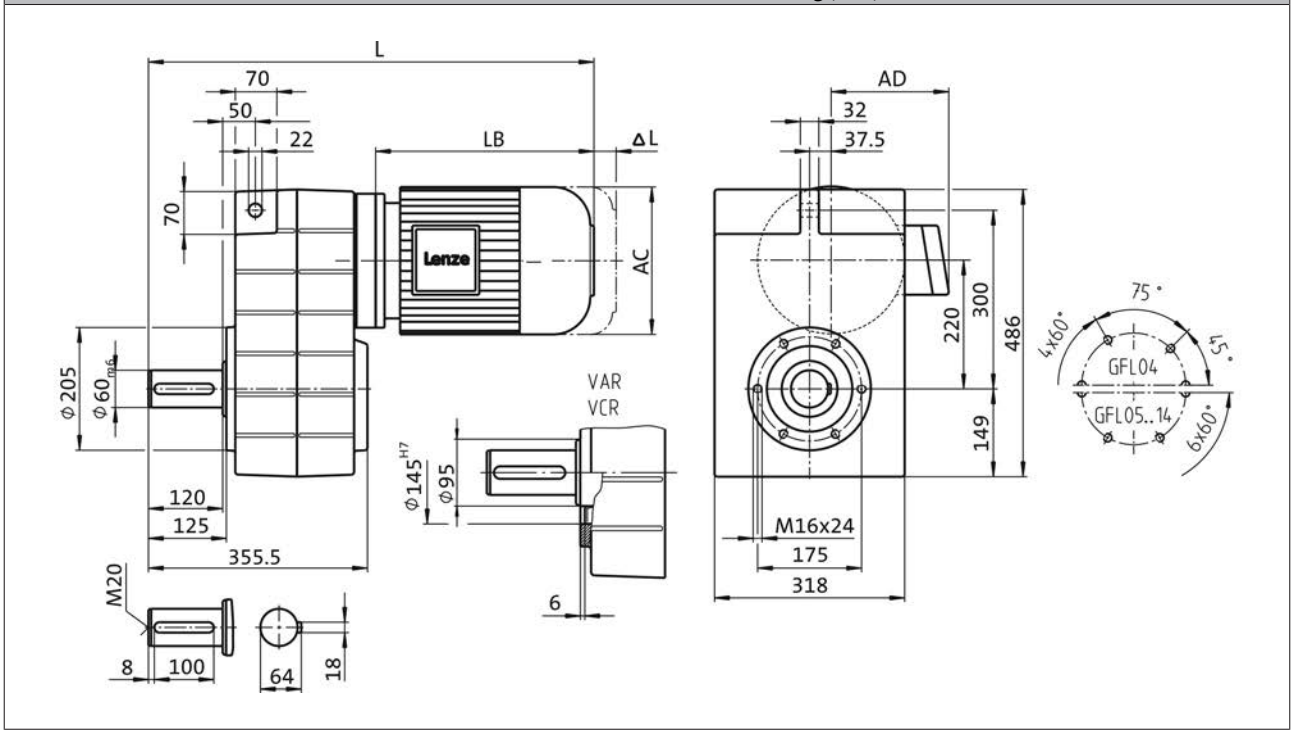

Product			m200						
			-P132L4	-P132M4	-P160L4	-P160M4	-P180L4	-P180M4	-P180V4
Dimensions									
Total length	**L**	**[mm]**	775		881		975		1028
Motor length	**LB**	**[mm]**	400		501		595		648
Length of motor options	**Δ L**	**[mm]**	118		144		108		
Motor diameter	**AC**	**[mm]**	281		302		281		
Distance motor/connection	**AD**	**[mm]**	182		231		282		

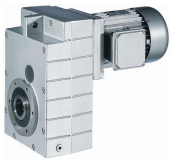

Dimensions, 4-pole motors

GFL09, 2-stage gearboxes

Dimensions with solid shaft and flange (VCK)

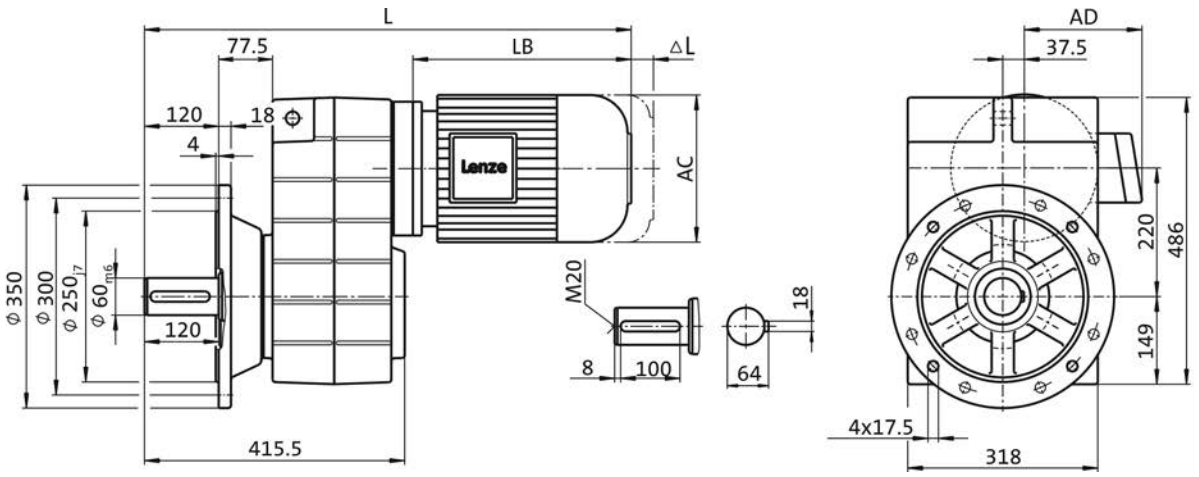

Product			m200						
			-P132L4	-P132M4	-P160L4	-P160M4	-P180L4	-P180M4	-P180V4
Dimensions									
Total length	**L**	**[mm]**	835		941		1035		1088
Motor length	**LB**	**[mm]**	400		501		595		648
Length of motor options	**Δ L**	**[mm]**	118		144		108		
Motor diameter	**AC**	**[mm]**	281		302		281		
Distance motor/connection	**AD**	**[mm]**	182		231		282		

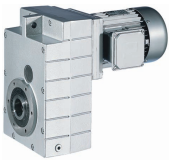

Dimensions, 4-pole motors

GFL11, 2-stage gearboxes

Dimensions with hollow shaft (HDR)
Dimensions with hollow shaft and centering (HCR)

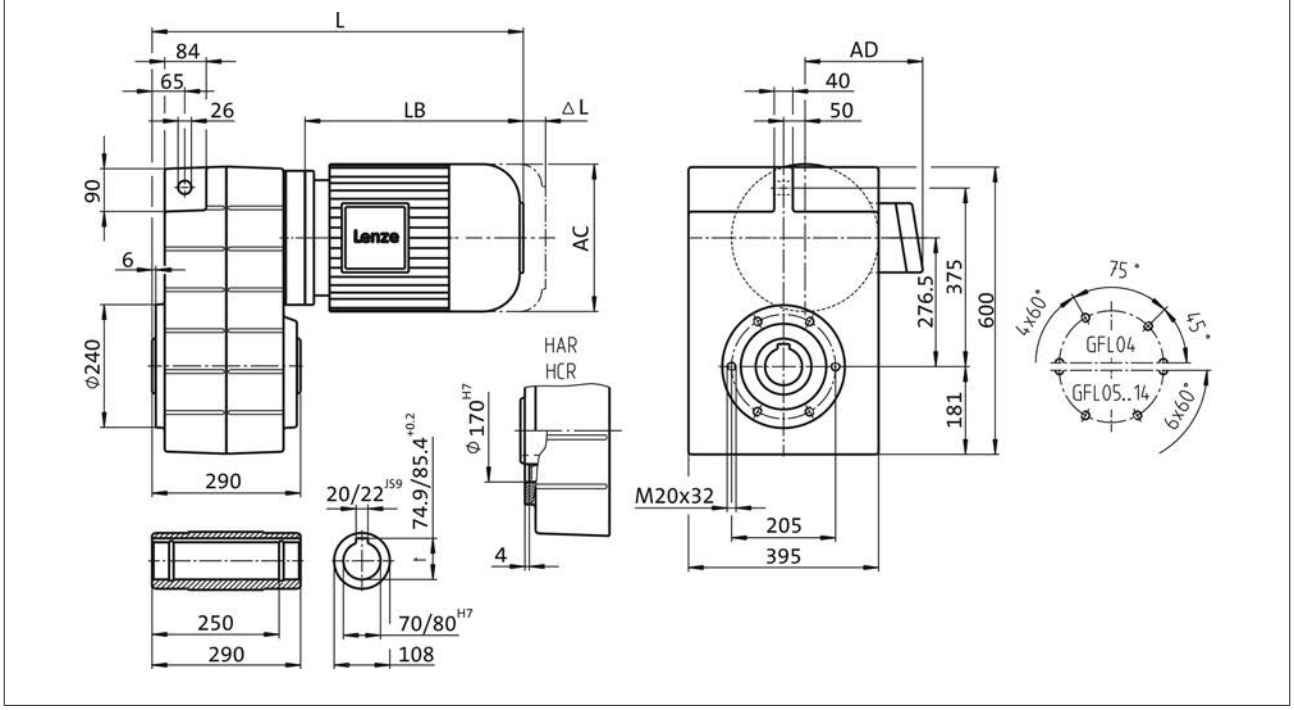

Product			m200						
			-P132L4	-P132M4	-P160L4	-P160M4	-P180L4	-P180M4	-P180V4
Dimensions									
Total length	**L**	**[mm]**	696		802		896		949
Motor length	**LB**	**[mm]**	400		501		595		648
Length of motor options	**Δ L**	**[mm]**	118		144		108		
Motor diameter	**AC**	**[mm]**	281		302		281		
Distance motor/connection	**AD**	**[mm]**	182		231		282		

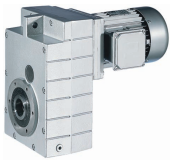

Dimensions, 4-pole motors

GFL11, 2-stage gearboxes

Dimensions with hollow shaft and flange (HCK)

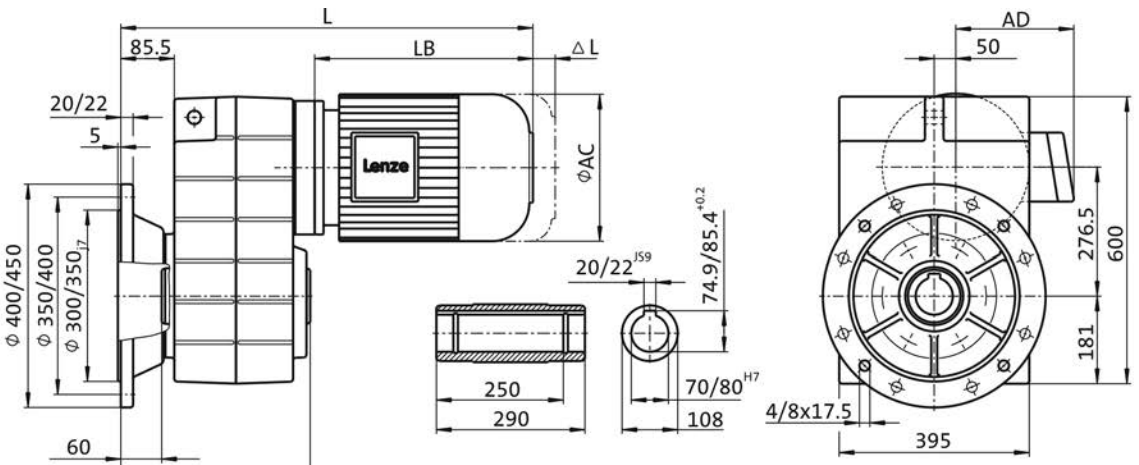

Product			m200						
			-P132L4	-P132M4	-P160L4	-P160M4	-P180L4	-P180M4	-P180V4
Dimensions									
Total length	**L**	**[mm]**	756		862		956		1009
Motor length	**LB**	**[mm]**	400		501		595		648
Length of motor options	**Δ L**	**[mm]**	118		144		108		
Motor diameter	**AC**	**[mm]**	281		302		281		
Distance motor/connection	**AD**	**[mm]**	182		231		282		

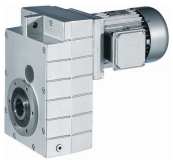

Dimensions, 4-pole motors

GFL11, 2-stage gearboxes

Dimensions with solid shaft (VDR)
Dimensions with hollow shaft and centering (VCR)

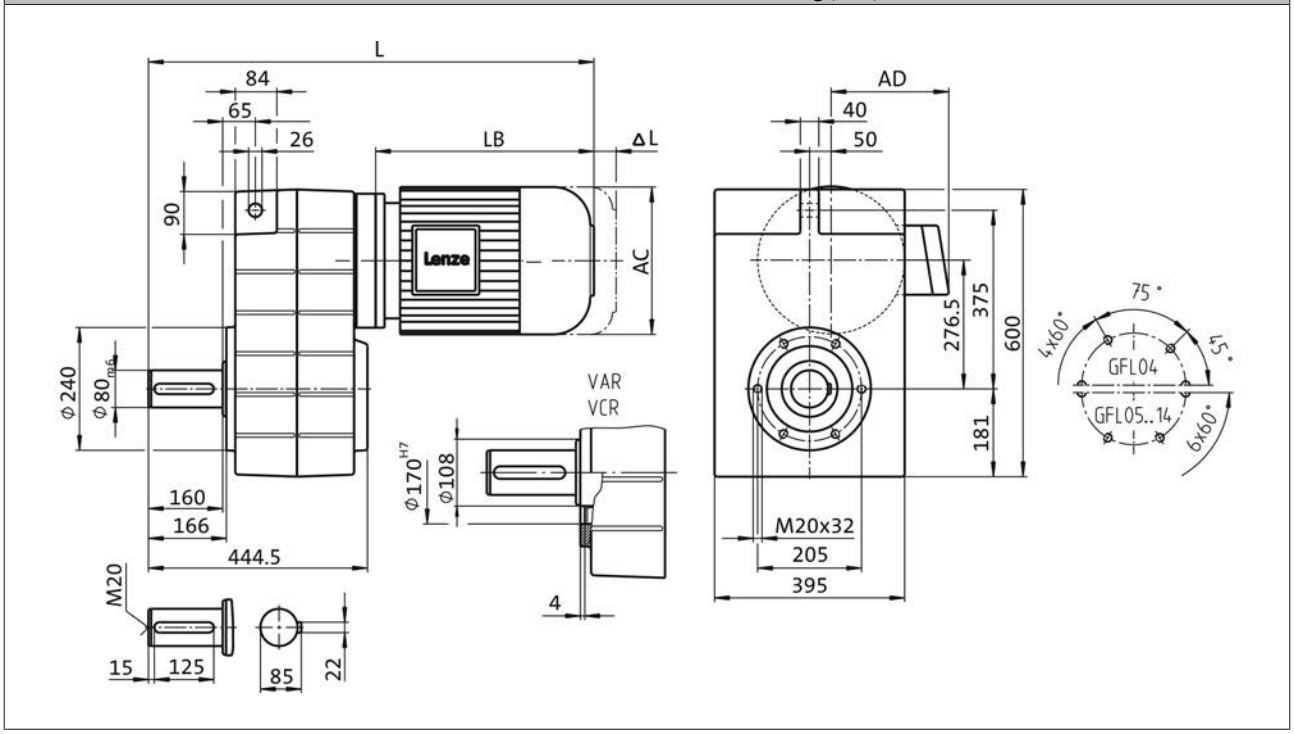

Product			m200						
			-P132L4	-P132M4	-P160L4	-P160M4	-P180L4	-P180M4	-P180V4
Dimensions									
Total length	**L**	**[mm]**	856		962		1056		1109
Motor length	**LB**	**[mm]**	400		501		595		648
Length of motor options	**Δ L**	**[mm]**	118		144		108		
Motor diameter	**AC**	**[mm]**	281		302		281		
Distance motor/connection	**AD**	**[mm]**	182		231		282		

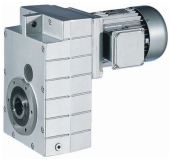

Dimensions, 4-pole motors

GFL11, 2-stage gearboxes

Dimensions with solid shaft and flange (VCK)

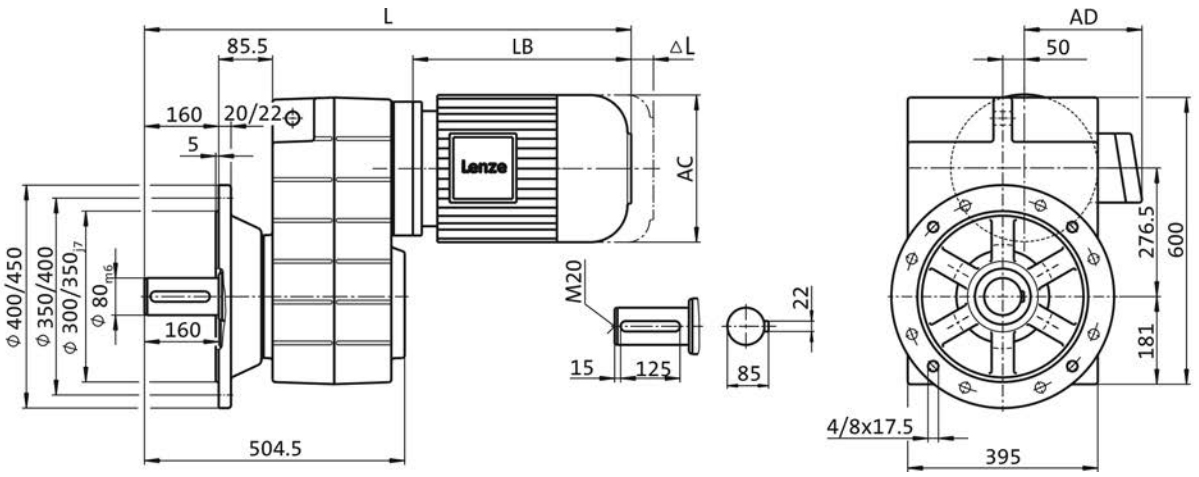

Product			m200						
			-P132L4	-P132M4	-P160L4	-P160M4	-P180L4	-P180M4	-P180V4
Dimensions									
Total length	**L**	**[mm]**	916		1022		1116		1169
Motor length	**LB**	**[mm]**	400		501		595		648
Length of motor options	**Δ L**	**[mm]**	118		144		108		
Motor diameter	**AC**	**[mm]**	281		302		281		
Distance motor/connection	**AD**	**[mm]**	182		231		282		

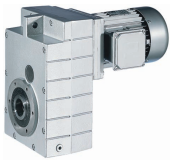

Dimensions, 4-pole motors

GFL11, 3-stage gearboxes

Dimensions with hollow shaft (HDR)
Dimensions with hollow shaft and centering (HCR)

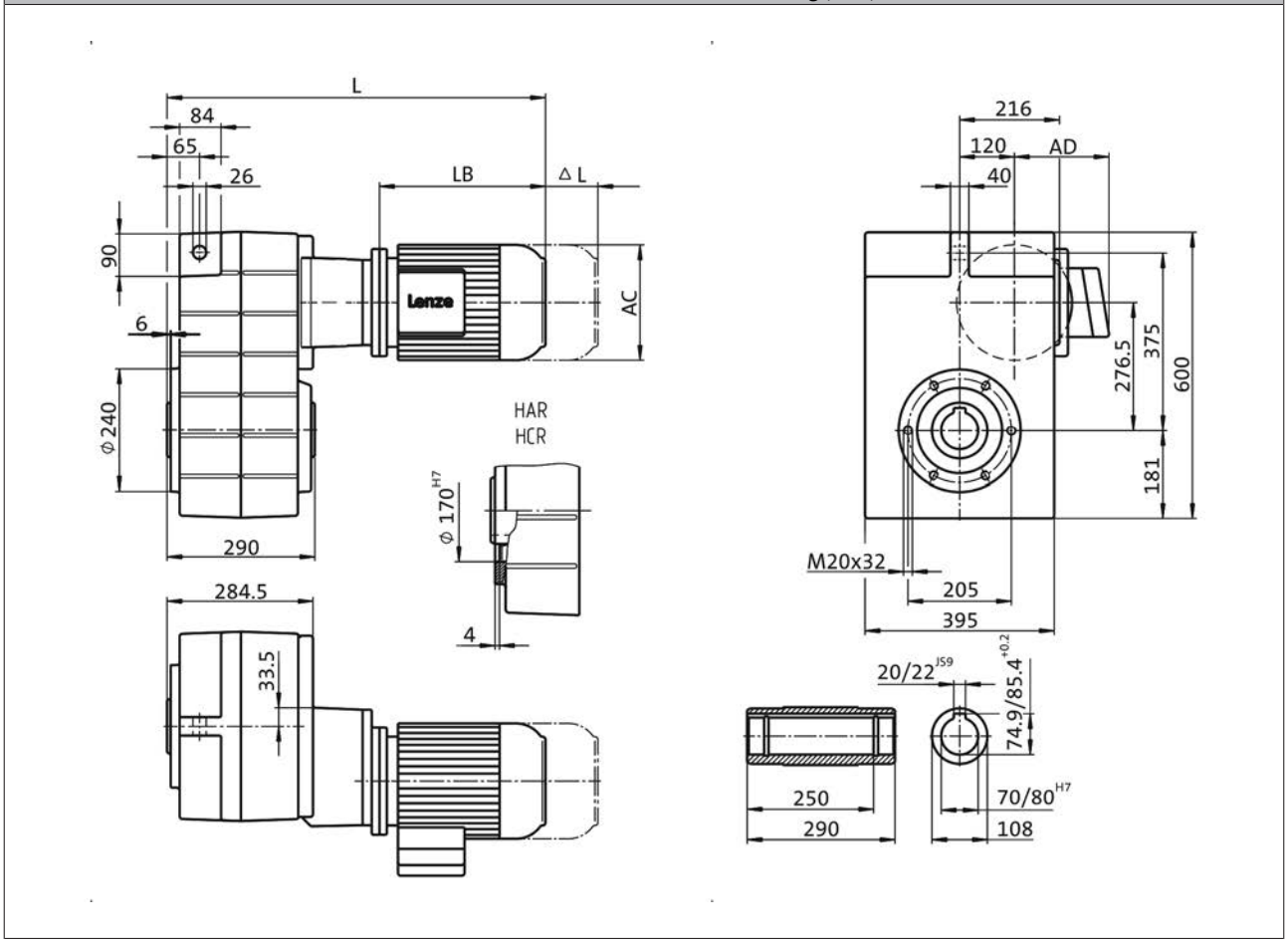

Product			m200	
			-P132L4	-P132M4
Dimensions				
Total length	**L**	**[mm]**	838	
Motor length	**LB**	**[mm]**	400	
Length of motor options	**Δ L**	**[mm]**	118	
Motor diameter	**AC**	**[mm]**	281	
Distance motor/connection	**AD**	**[mm]**	182	

6.2

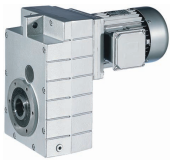

Dimensions, 4-pole motors

GFL11, 3-stage gearboxes

Dimensions with hollow shaft and flange (HCK)

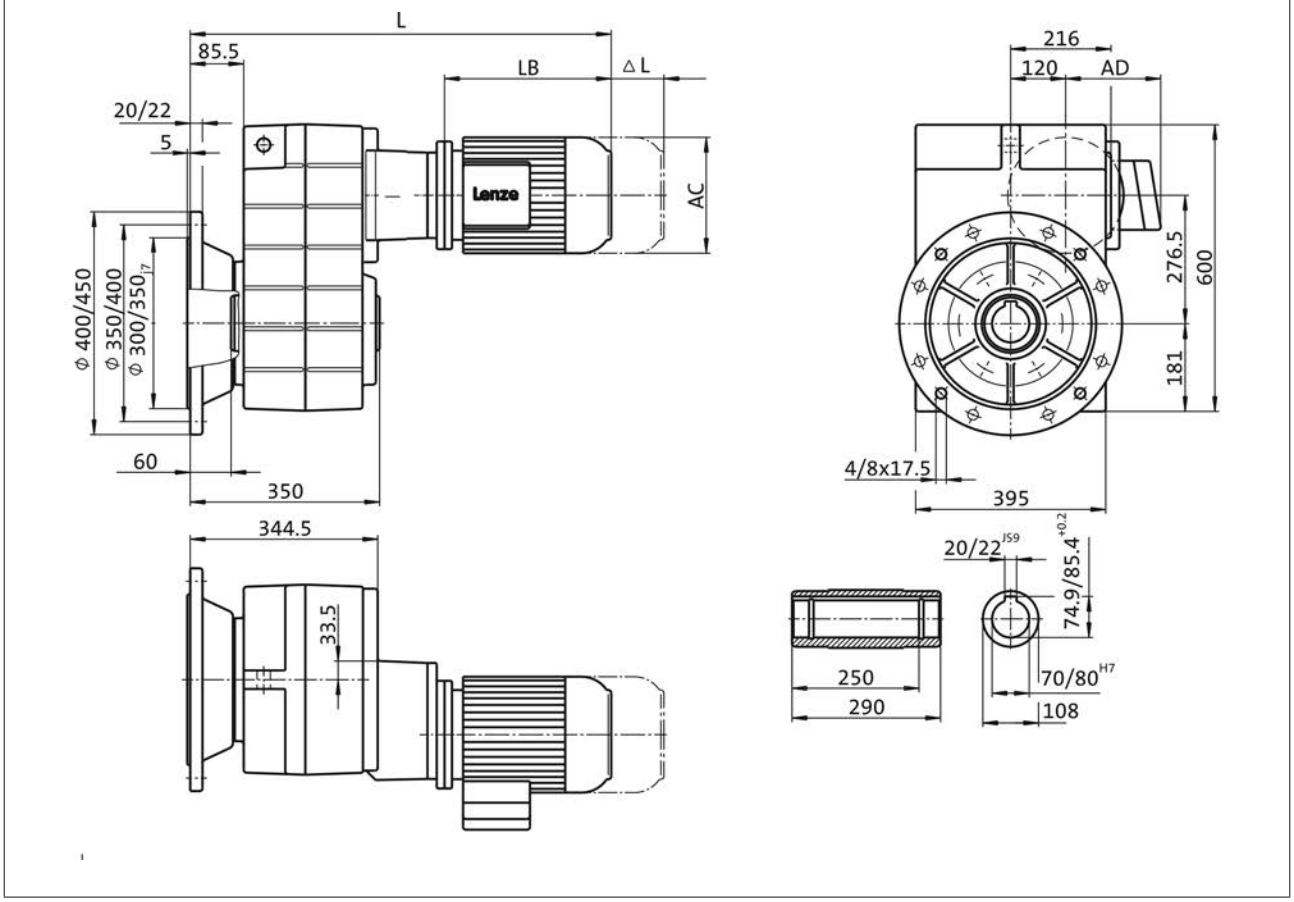

Product			m200	
			-P132L4	-P132M4
Dimensions				
Total length	**L**	**[mm]**	898	
Motor length	**LB**	**[mm]**	400	
Length of motor options	**Δ L**	**[mm]**	118	
Motor diameter	**AC**	**[mm]**	281	
Distance motor/connection	**AD**	**[mm]**	182	

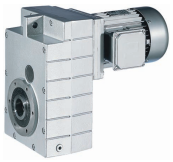

Dimensions, 4-pole motors

GFL11, 3-stage gearboxes

Dimensions with solid shaft (VDR)
Dimensions with hollow shaft and centering (VCR)

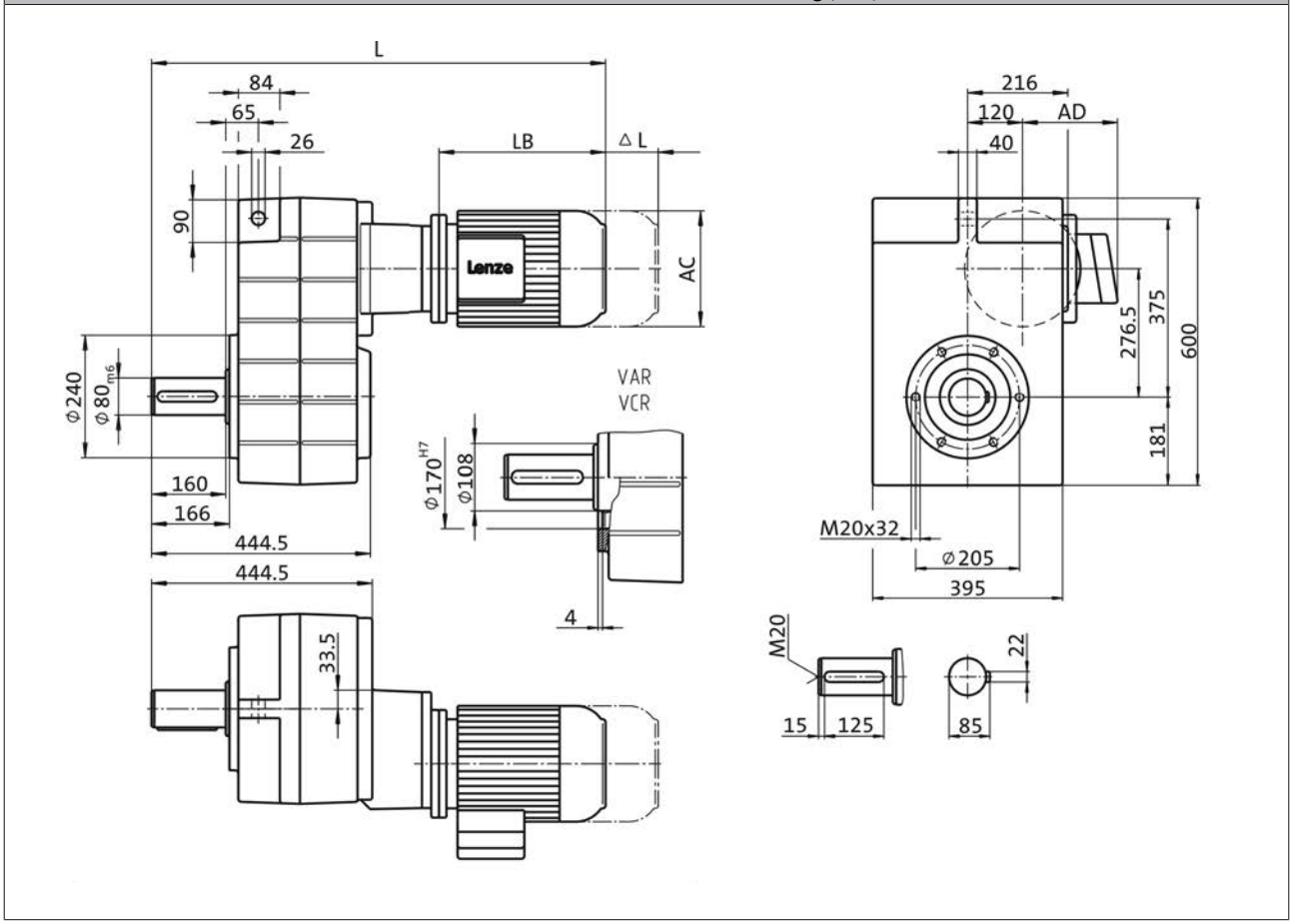

Product			m200	
			-P132L4	-P132M4
Dimensions				
Total length	**L**	**[mm]**	998	
Motor length	**LB**	**[mm]**	400	
Length of motor options	**Δ L**	**[mm]**	118	
Motor diameter	**AC**	**[mm]**	281	
Distance motor/connection	**AD**	**[mm]**	182	

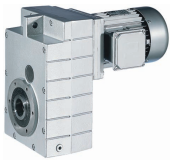

Dimensions, 4-pole motors

GFL11, 3-stage gearboxes

Dimensions with solid shaft and flange (VCK)

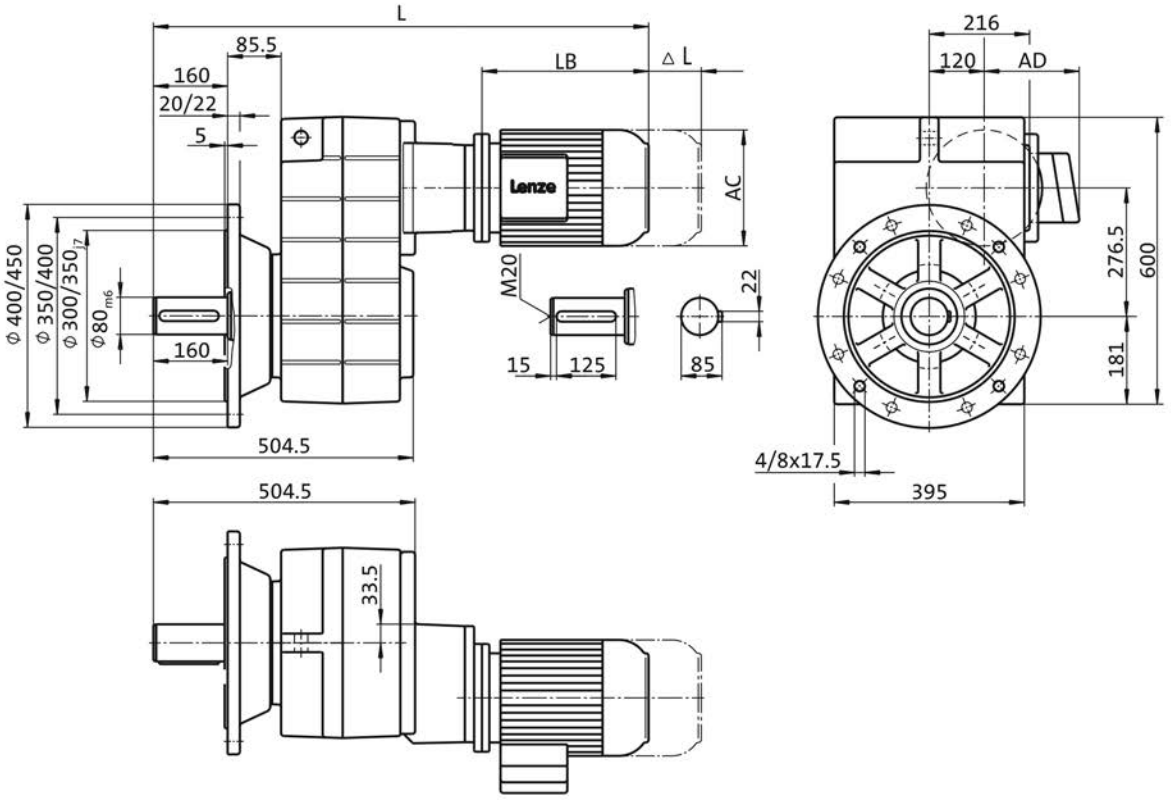

Product			m200	
			-P132L4	-P132M4
Dimensions				
Total length	**L**	**[mm]**	1058	
Motor length	**LB**	**[mm]**	400	
Length of motor options	**Δ L**	**[mm]**	118	
Motor diameter	**AC**	**[mm]**	281	
Distance motor/connection	**AD**	**[mm]**	182	

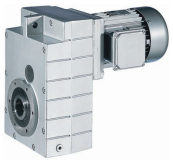

Dimensions, 4-pole motors

GFL14, 2-stage gearboxes

Dimensions with hollow shaft (HDR)
Dimensions with hollow shaft and centering (HCR)

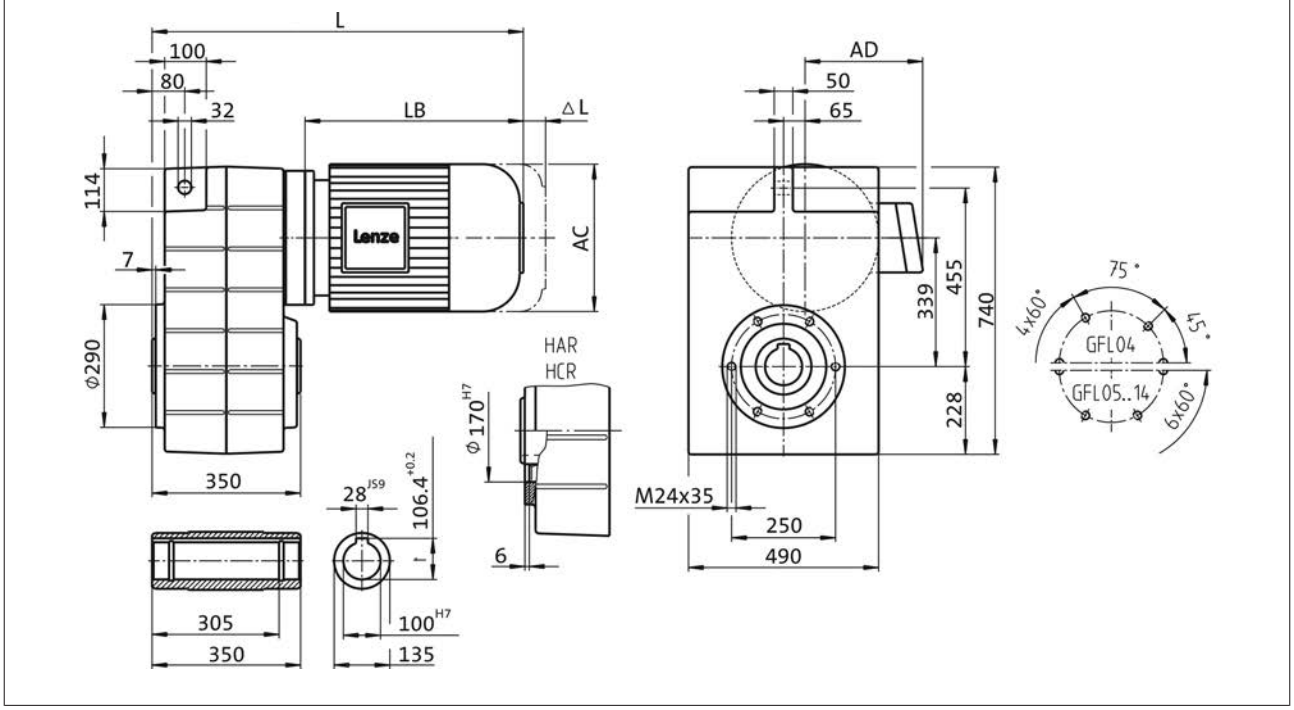

Product			m200								
			-P132L4	-P132M4	-P160L4	-P160M4	-P180L4	-P180M4	-P180V4	-P225L4	-P225M4
Dimensions											
Total length	**L**	**[mm]**	741		847		941		994	1026	
Motor length	**LB**	**[mm]**	400		501		595		648	680	
Length of motor options	**Δ L**	**[mm]**	118		144		108			202	
Motor diameter	**AC**	**[mm]**	281		302		281			456	
Distance motor/connection	**AD**	**[mm]**	182		231		282			330	

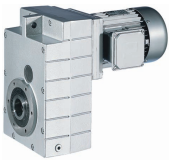

Dimensions, 4-pole motors

GFL14, 2-stage gearboxes

Dimensions with hollow shaft and flange (HCK)

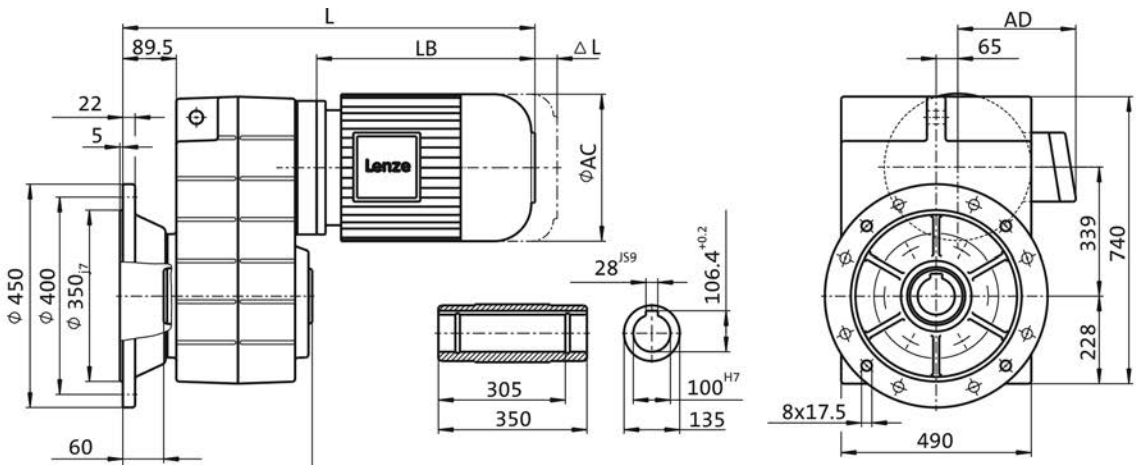

Product			m200								
			-P132L4	-P132M4	-P160L4	-P160M4	-P180L4	-P180M4	-P180V4	-P225L4	-P225M4
Dimensions											
Total length	**L**	**[mm]**	801		907		1001		1054	1086	
Motor length	**LB**	**[mm]**	400		501		595		648	680	
Length of motor options	**Δ L**	**[mm]**	118		144		108			202	
Motor diameter	**AC**	**[mm]**	281		302		281			456	
Distance motor/connection	**AD**	**[mm]**	182		231		282			330	

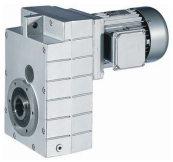

Dimensions, 4-pole motors

GFL14, 2-stage gearboxes

Dimensions with solid shaft (VDR)
Dimensions with hollow shaft and centering (VCR)

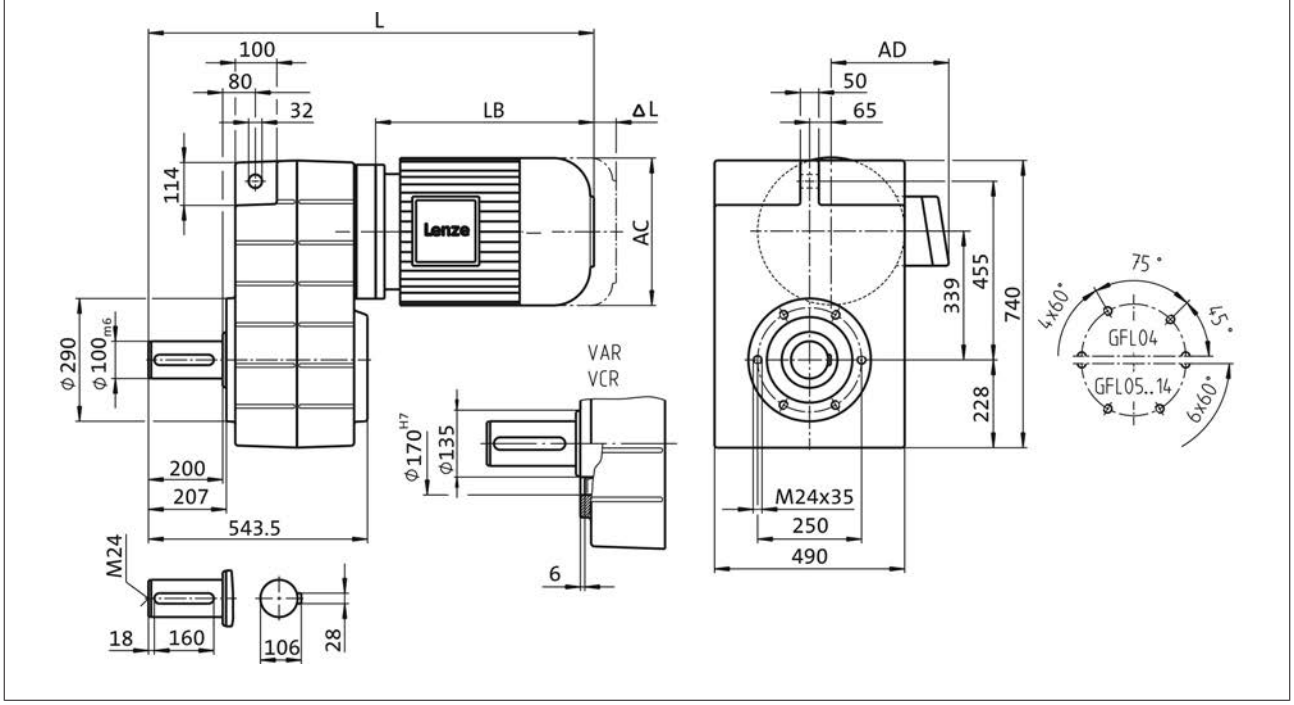

Product			m200								
			-P132L4	-P132M4	-P160L4	-P160M4	-P180L4	-P180M4	-P180V4	-P225L4	-P225M4
Dimensions											
Total length	**L**	**[mm]**	941		1047		1141		1194	1226	
Motor length	**LB**	**[mm]**	400		501		595		648	680	
Length of motor options	**Δ L**	**[mm]**	118		144		108			202	
Motor diameter	**AC**	**[mm]**	281		302		281			456	
Distance motor/connection	**AD**	**[mm]**	182		231		282			330	

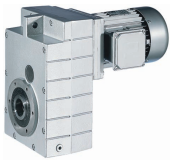

Dimensions, 4-pole motors

GFL14, 2-stage gearboxes

Dimensions with solid shaft and flange (VCK)

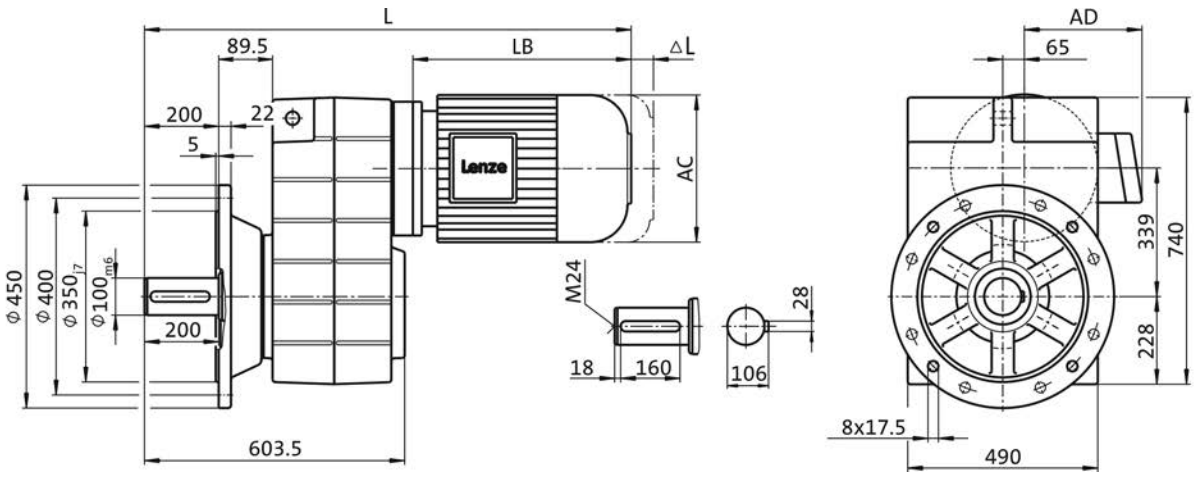

Product			m200								
			-P132L4	-P132M4	-P160L4	-P160M4	-P180L4	-P180M4	-P180V4	-P225L4	-P225M4
Dimensions											
Total length	**L**	**[mm]**	1001		1107		1201		1254	1286	
Motor length	**LB**	**[mm]**	400		501		595		648	680	
Length of motor options	**Δ L**	**[mm]**	118		144		108			202	
Motor diameter	**AC**	**[mm]**	281		302		281			456	
Distance motor/connection	**AD**	**[mm]**	182		231		282			330	

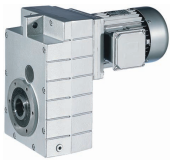

Dimensions, 4-pole motors

GFL14, 3-stage gearboxes

Dimensions with hollow shaft (HDR)
Dimensions with hollow shaft and centering (HCR)

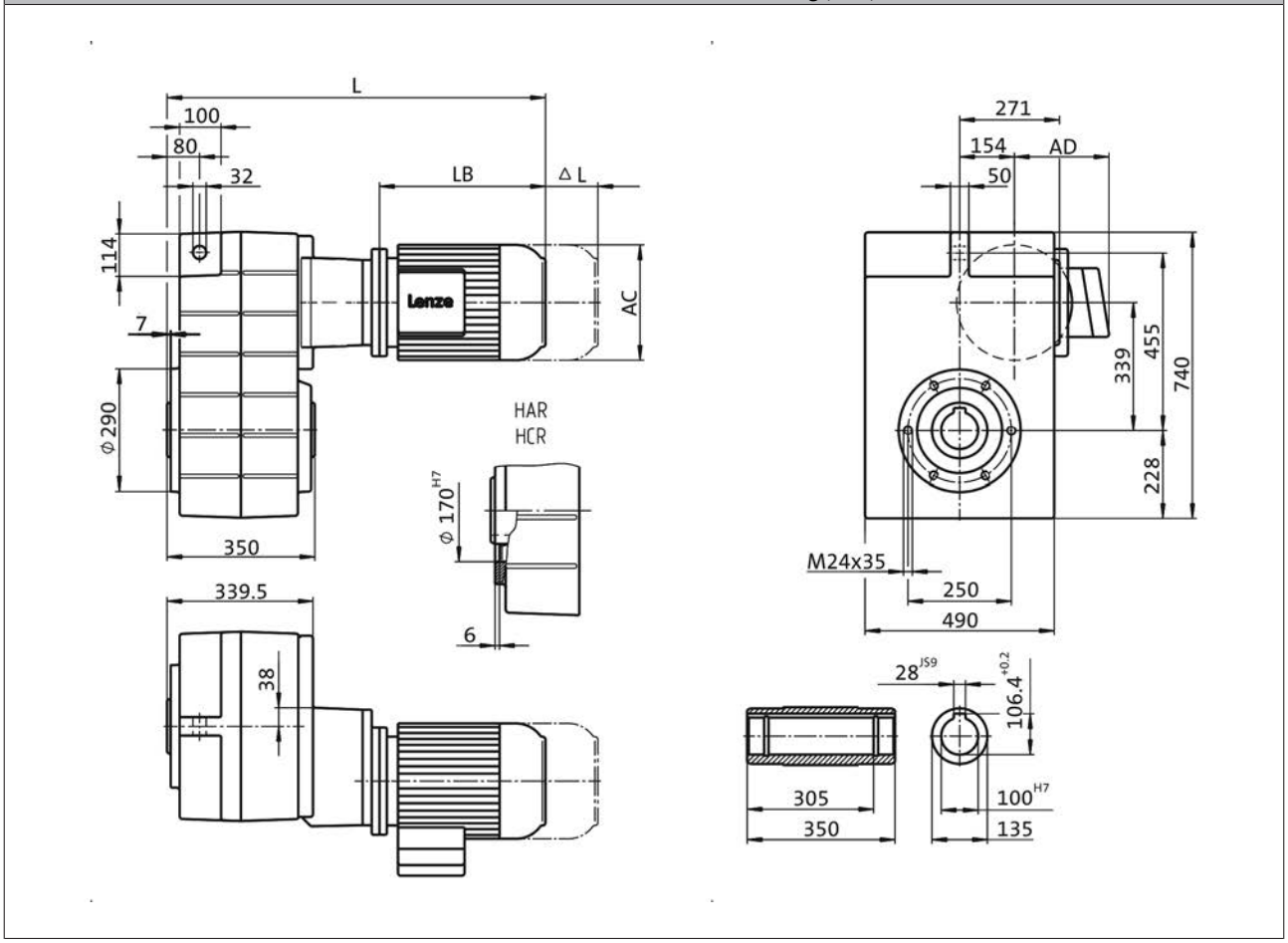

Product			m200			
			-P132L4	-P132M4	-P160L4	-P160M4
Dimensions						
Total length	**L**	**[mm]**	917		1023	
Motor length	**LB**	**[mm]**	400		501	
Length of motor options	**Δ L**	**[mm]**	118		144	
Motor diameter	**AC**	**[mm]**	281		302	
Distance motor/connection	**AD**	**[mm]**	182		231	

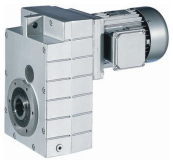

Dimensions, 4-pole motors

GFL14, 3-stage gearboxes

Dimensions with hollow shaft and flange (HCK)

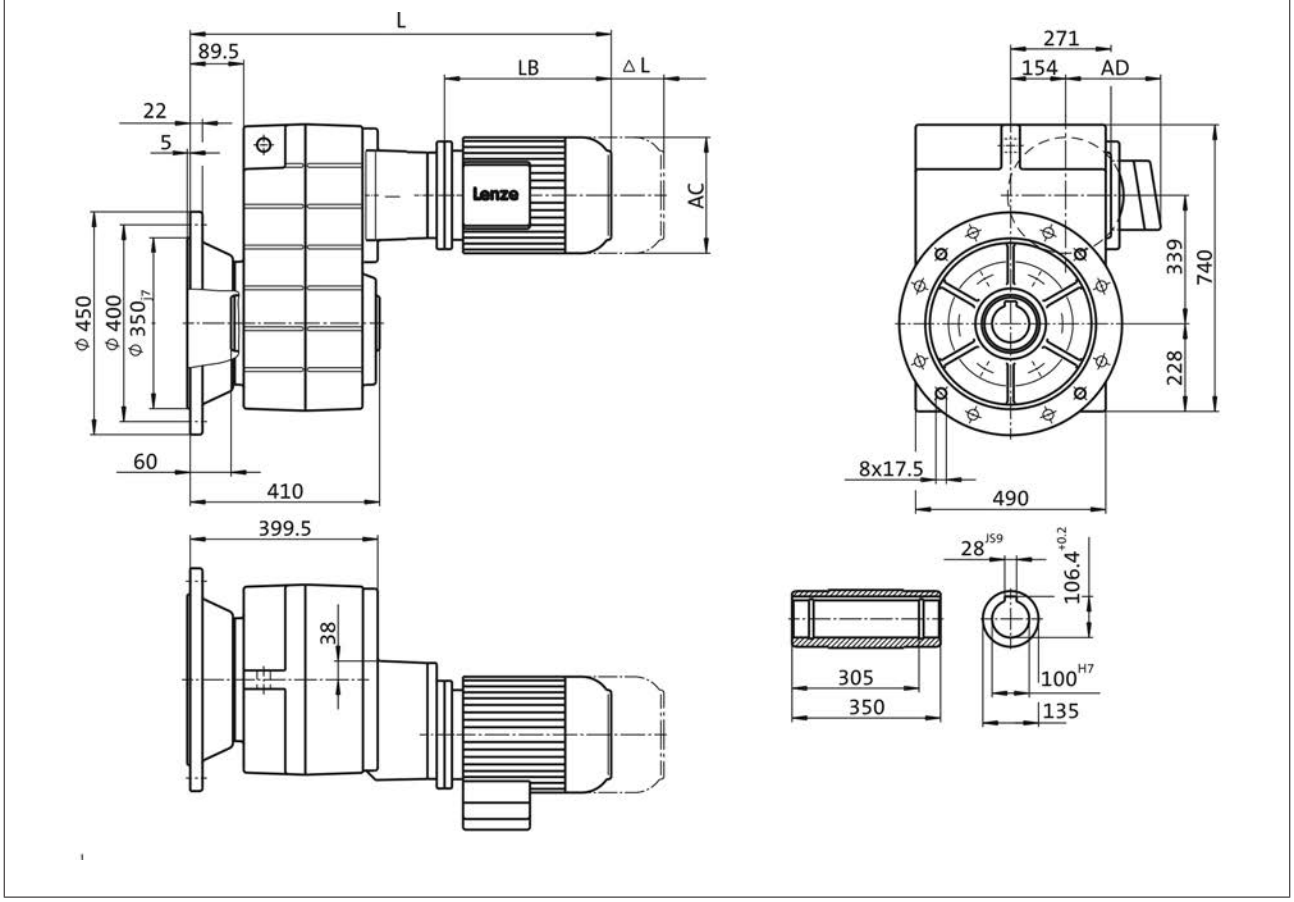

Product			m200			
			-P132L4	-P132M4	-P160L4	-P160M4
Dimensions						
Total length	**L**	**[mm]**	977		1083	
Motor length	**LB**	**[mm]**	400		501	
Length of motor options	**Δ L**	**[mm]**	118		144	
Motor diameter	**AC**	**[mm]**	281		302	
Distance motor/connection	**AD**	**[mm]**	182		231	

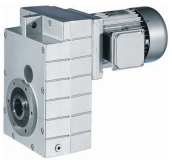

Dimensions, 4-pole motors

GFL14, 3-stage gearboxes

Dimensions with solid shaft (VDR)
Dimensions with hollow shaft and centering (VCR)

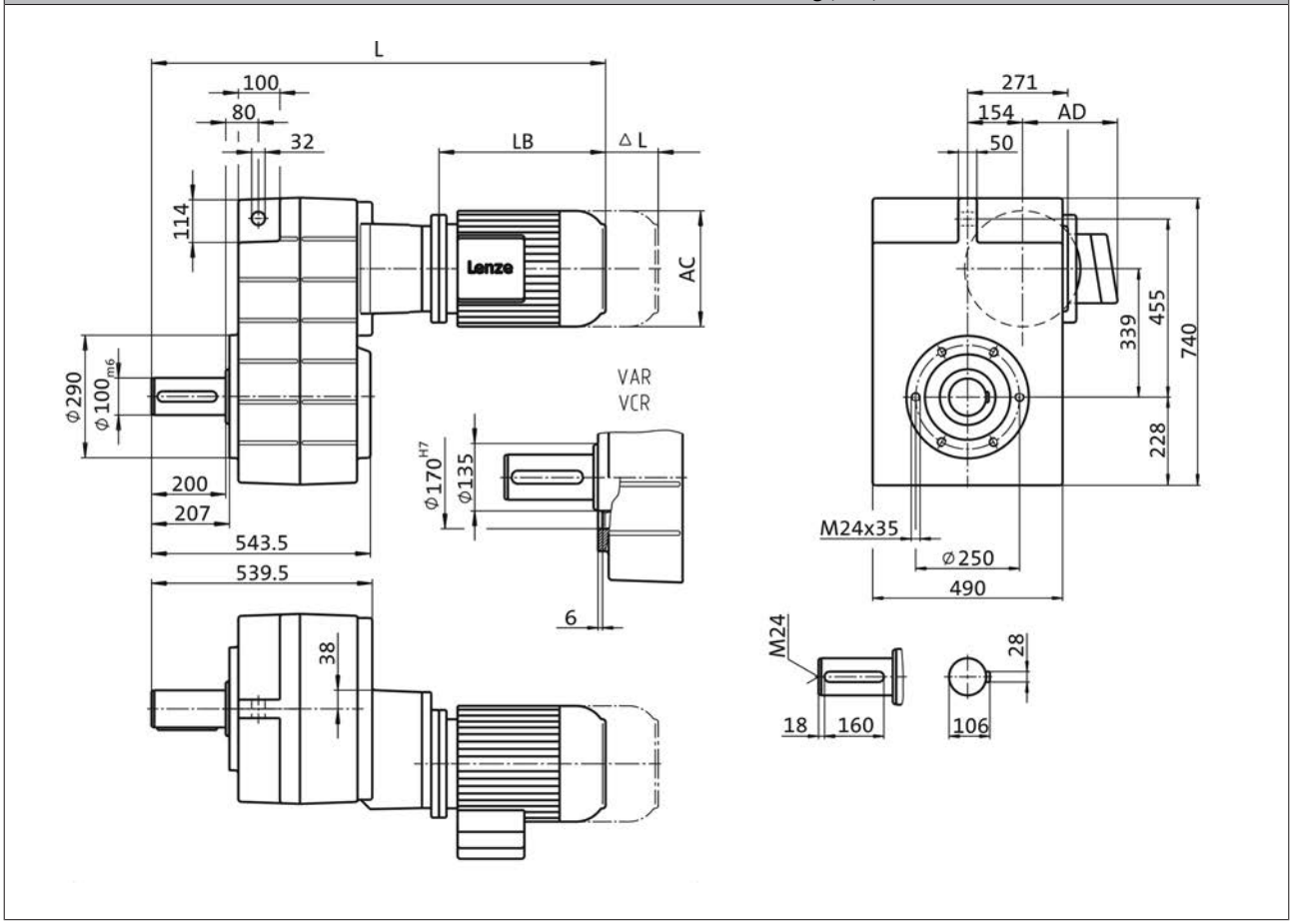

Product			m200			
			-P132L4	-P132M4	-P160L4	-P160M4
Dimensions						
Total length	**L**	**[mm]**	1117		1223	
Motor length	**LB**	**[mm]**	400		501	
Length of motor options	**Δ L**	**[mm]**	118		144	
Motor diameter	**AC**	**[mm]**	281		302	
Distance motor/connection	**AD**	**[mm]**	182		231	

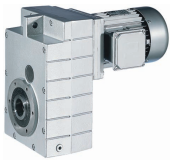

Dimensions, 4-pole motors

GFL14, 3-stage gearboxes

Dimensions with solid shaft and flange (VCK)

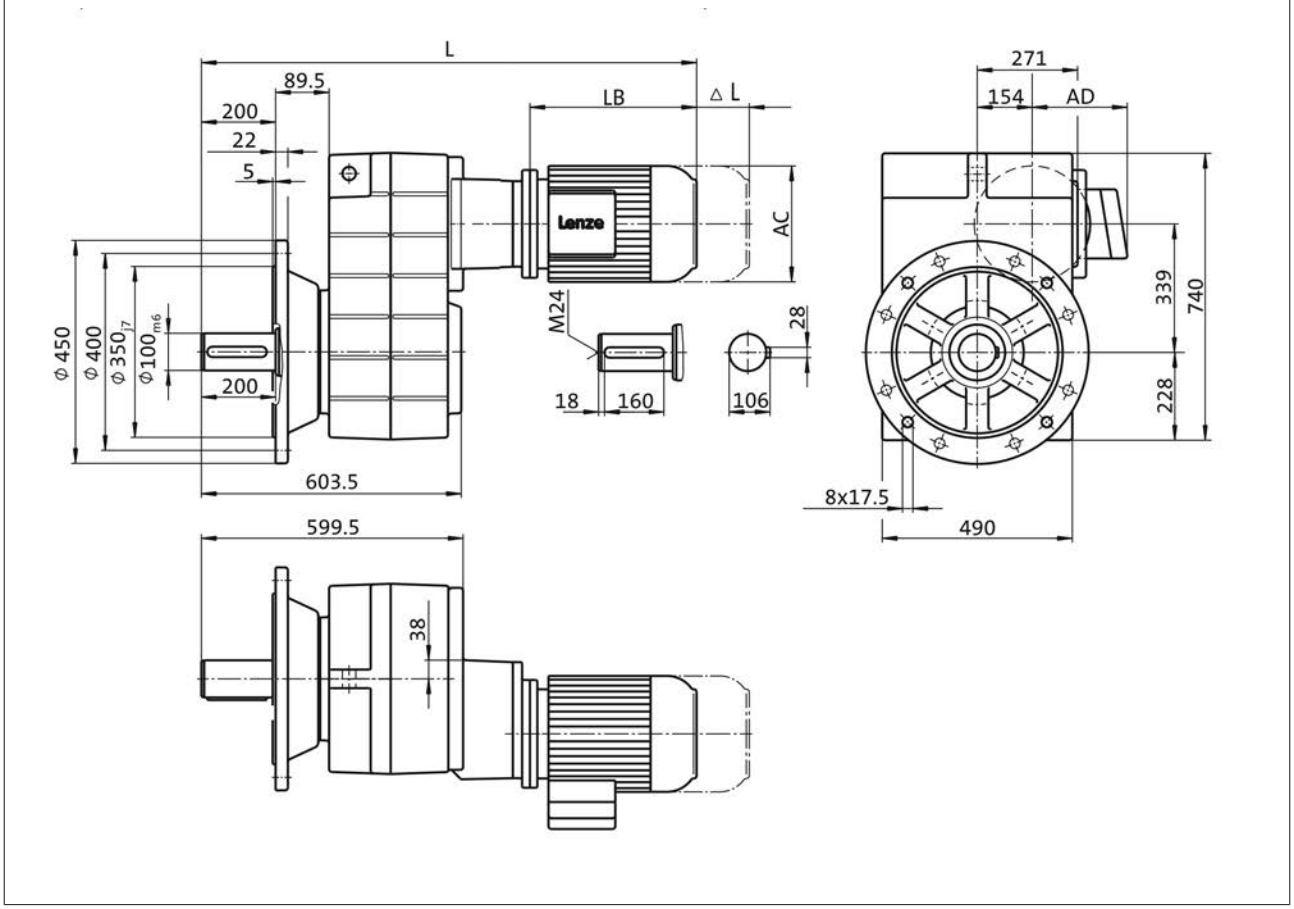

Product			m200			
			-P132L4	-P132M4	-P160L4	-P160M4
Dimensions						
Total length	**L**	**[mm]**	1177		1283	
Motor length	**LB**	**[mm]**	400		501	
Length of motor options	**Δ L**	**[mm]**	118		144	
Motor diameter	**AC**	**[mm]**	281		302	
Distance motor/connection	**AD**	**[mm]**	182		231	

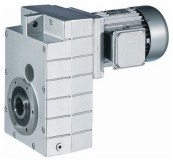

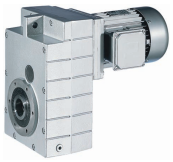

Hollow shaft with shrink disc

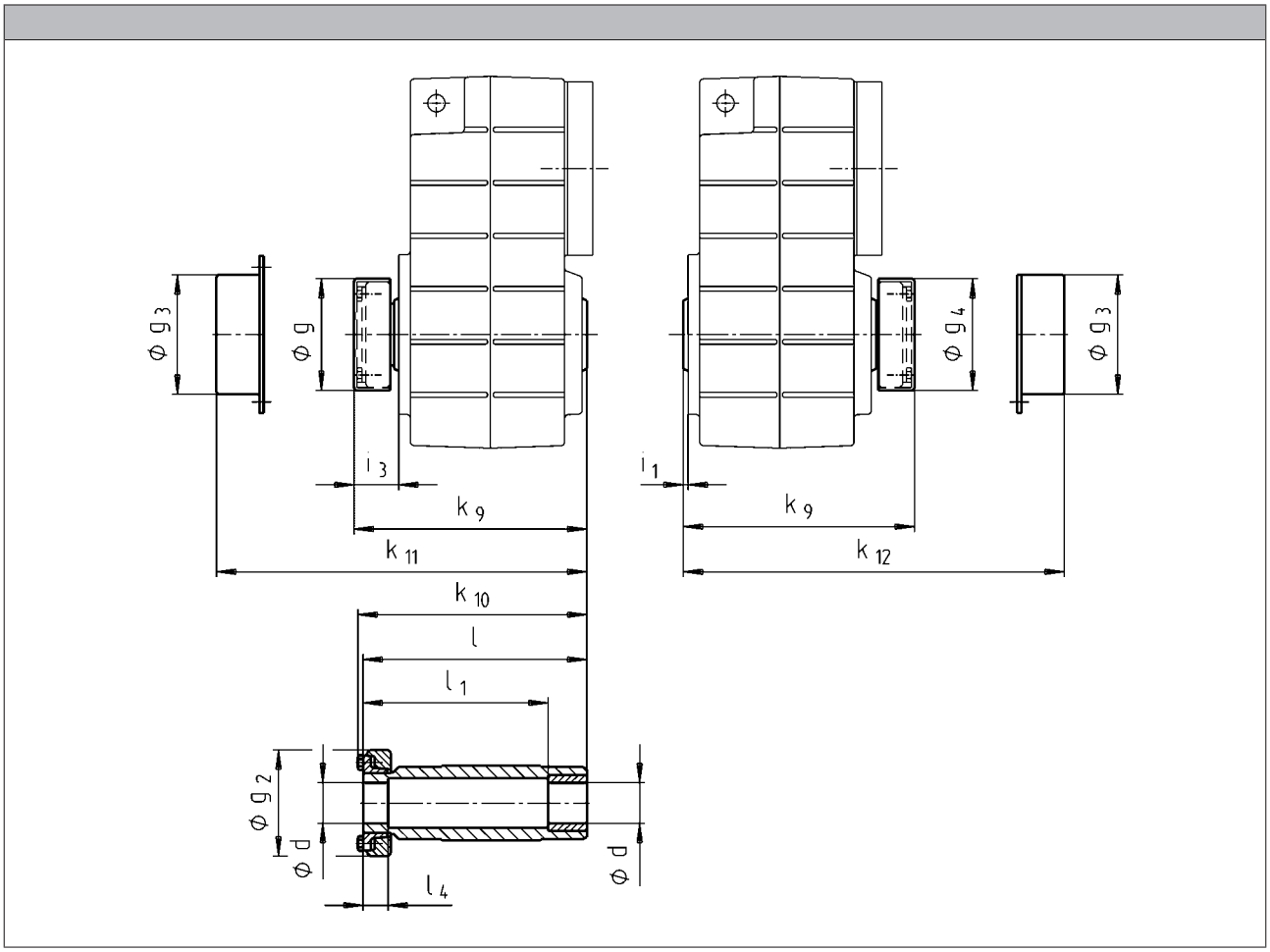

	d [1]	g_2	g_3	g_4	i_1	k_9	k_{10}	k_{11}	k_{12}	l	l_1	l_4
	h6											
GFL04	25 30	72	79	76	2.5	150	148	154	154	142	122	26
GFL04	25 30	72	79	76	2.5	150	148	154	154	142	122	26
GFL05	35	80	90	84	4.0	176	174	179	180	168	148	28
GFL06	40	90	100	94	5.0	202	200	204	205	194	164	30
GFL07	50	110	124	116	5.0	241	238	244	245	232	192	26
GFL09	65	141	159	147	5.0	288	285	287	288	278	228	30
GFL11	80	170	191	176	6.0	347	344	349	350	338	238	42
GFL14	100	215	253	221	7.0	418	415	421	422	407	307	55

[1] Machine shaft design.

- Output flange and hollow shaft with shrink disc (design S□K) is only possible with shrink disc in position 1.

- Not suitable for through machine shaft at motor end:
  GFL04-2M S□□ 080□□□; d=30
  GFL05-2M S□□ 100□□□; d=35
  GFL06-2M S□□ 132□□□; d=40
  GFL07-2M S□□ 160□□□; d=50
  GFL11-2M S□□ 225□□□; d=80

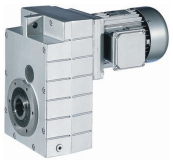

Hollow shaft with shrink disc

► Ensure that the strength of the machine shaft material is adequate in shrink disc designs.
When using typical steels, e.g. C45, 42CrMo4, the torques listed in the selection tables can be used without restriction.
Please consult us if you wish to use material that is considerably weaker. Medium surface roughness Rz must not exceed 15 µm (turning is sufficient).

Combination options with shrink disc in position 1 (drive end)

GFL□□-2M

Gearbox	Motor frame size
GFL04	
GFL05	063 [1)] 071 [1)]
GFL06	063 071 080 090 [1)] 100 [1)]
GFL07	080 090 100 112 [1)]
GFL09	090 100 112 132
GFL11	100 112 132 160 180 225
GFL14	112 132 160 180 225

[1)] Only possible without cover

► For geared motors GFL□□-2M/E S... with shrink disc position 1: terminal box position / motec position 4 not possible!

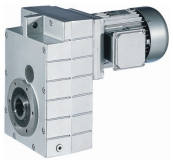

Mounting set for hollow shaft circlip:
Proposed design for auxiliary tools

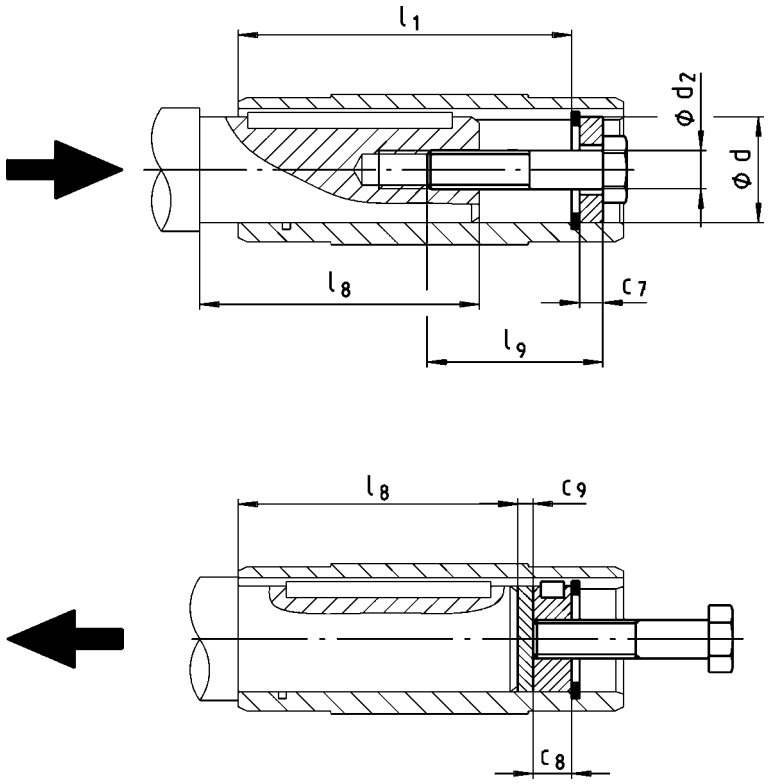

	d	l_1	d_2	l_9	c_7	c_8	c_9	$l_{8,\,max}$
	H7							
GFL04	25 30	100	M10	40	5	10	3	85
					6			
GFL05	30 35	124						107
			M12	50	7	12		
GFL06	40 45	140	M16	60	8	16	4	118
					9			
GFL07	50 55	175			10		5	148
			M20	80	11	20		
GFL09	60 70	210			13			182
					14			
GFL11	70 80	250					6	221
					16			
GFL14	100	305	M24	100	20	24	8	270

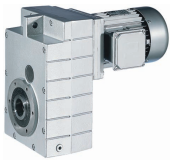

Foot mounting in position 3

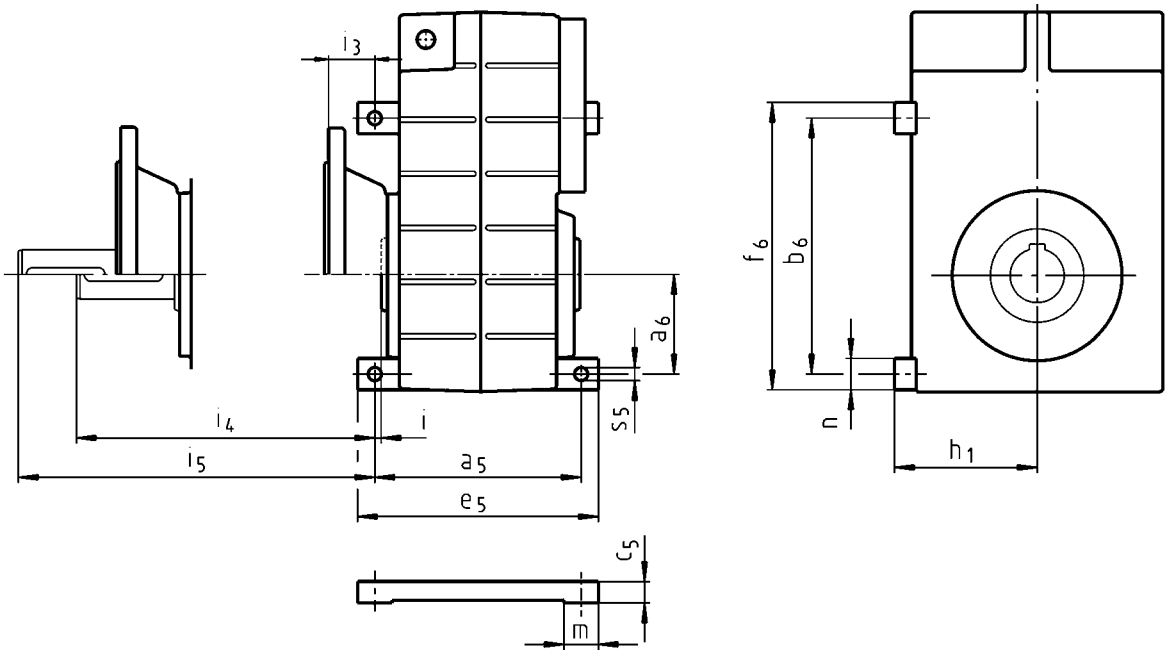

	a_5	a_6	b_6	c_5	e_5	f_6	h_1	i	i_3	i_4	i_5	m	n	s_5
GFL04	130	47	115	18	152	140	90	4.5	28.5	45.5	78.5	22	25	6.6
GFL05	160	65	167	21	185	192	100	2.0	31.0	58.0	91.0	25		9.0
GFL06	175	80	205	27	205	233	125		39.0	78.0	119	30	28	11.0
GFL07	220	100	260	31	255	292	155	3.0	52.0	97.0	152	35	32	13.5
GFL09	260	125	335	36	300	375	190		57.0	117	177	40	40	17.5
GFL11	315	155	435	48	365	485	240			157	217	50	50	22.0
GFL14	375	200	540	57	430	600	295			197	257	55	60	26.0

Foot design is not available for the following combinations:
- GFL04: Motor frame size 090
- GFL05: Motor frame size 090
- GFL05: Motor frame size 100
- GFL06: Motor frame size 112
- GFL06: Motor frame size 132
- GFL07: Motor frame size 160

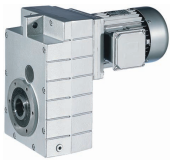

Foot mounting in position 4

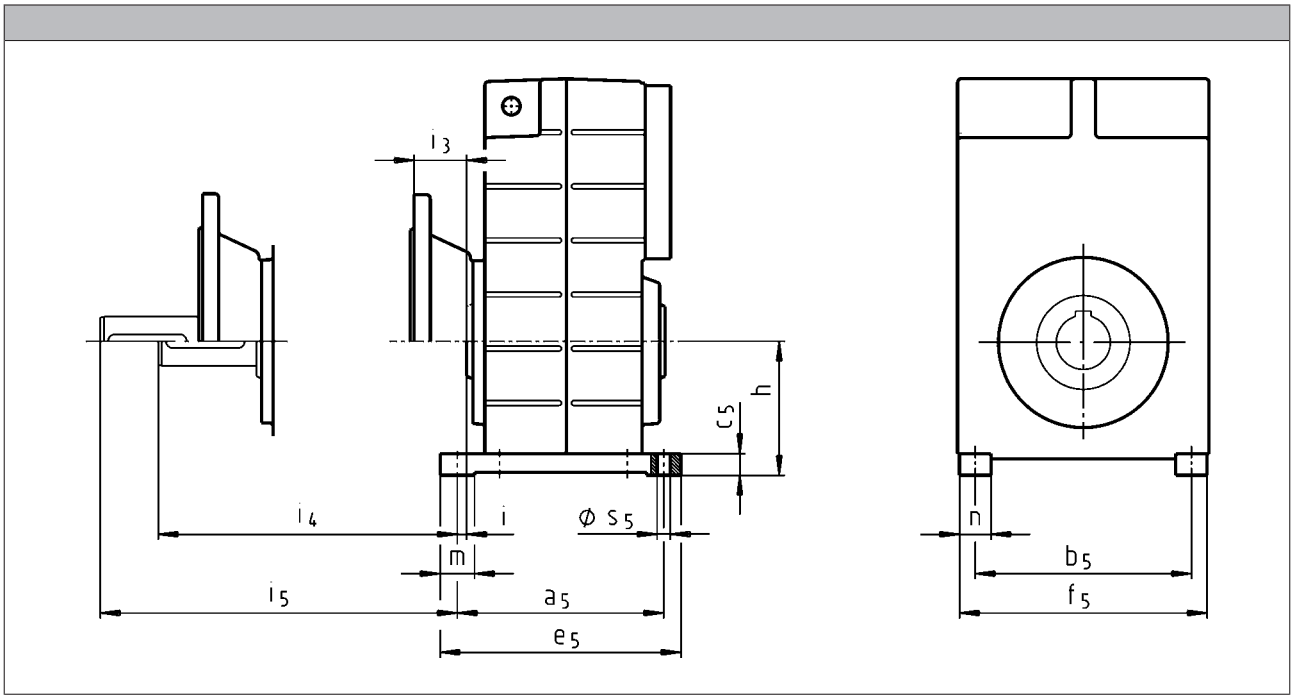

	a_5	b_5	c_5	e_5	f_5	h	i	i_3	i_4	i_5	m	n	s_5
GFL04	130	108	18	152	133.0	85	4.5	28.5	45.5	78.5	22	25	6.6
GFL05	160	140	21	185	165.0	95	2.0	31.0	58.0	91.0	25		9.0
GFL06	175	175	27	205	203.0	120		39.0	78.0	119	30	28	11.0
GFL07	220	220	31	255	252.0	145	3.0	52.0	97.0	152	35	32	13.5
GFL09	260	275	36	300	315.0	180		57.0	117	177	40	40	17.5
GFL11	315	340	48	365	390.0	224			157	217	50	50	22.0
GFL14	375	425	57	430	485.0	278			197	257	55	60	26.0

► In mounting positions E and F, the oil check bore hole/oil-sight glass are located between the feet in position 4!

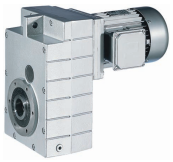

Rubber buffer for torque plate

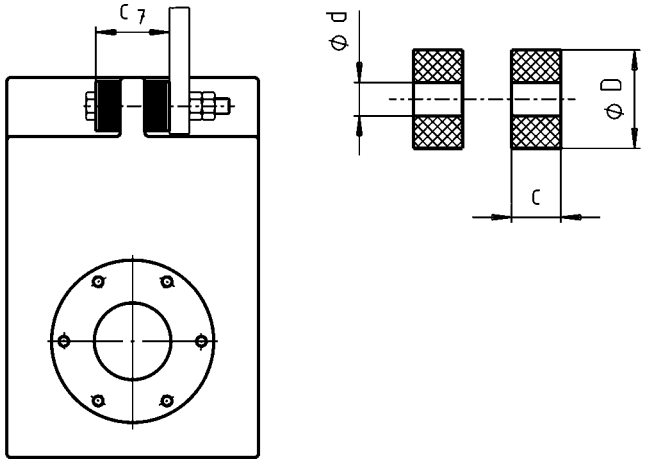

	d	D	c	c_7
GFL04	11	30	14.5	43
GFL05	11	30	14.5	45
GFL06	13	40	15.0	50
GFL07	17	50	27.0	79
GFL09	21	60	28.0	88
GFL11	26	72	29.0	98
GFL14	33	92	30.0	110

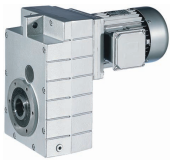

Ventilations

Position of ventilation, sealing elements and oil level check

GFL05...14-2

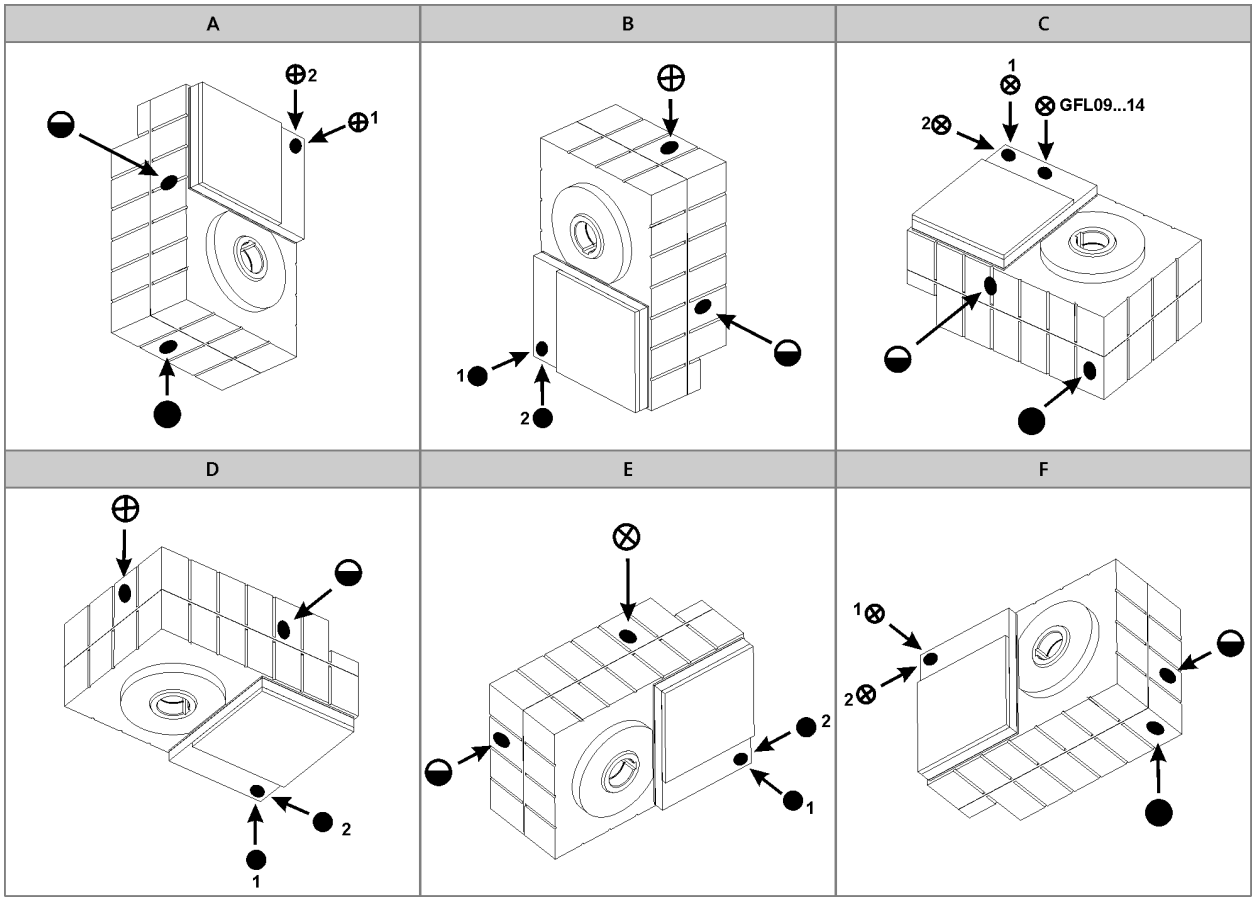

A to F Mounting position
⊗ Ventilation / Oil filler plug
● Oil drain plug
◒ Oil control plug
* On both sides
** On opposite side

Pos.1 standard
Pos.2 only for:
- GFL05-2M □□□ 090□□□
- GFL05-2M □□□ 100□□□
- GFL06-2M □□□ 112□□□
- GFL07-2M □□□ 160□□□

6.2

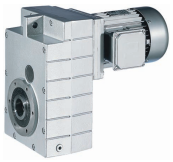

Ventilations

Position of ventilation, sealing elements and oil level check

GFL05...14-3

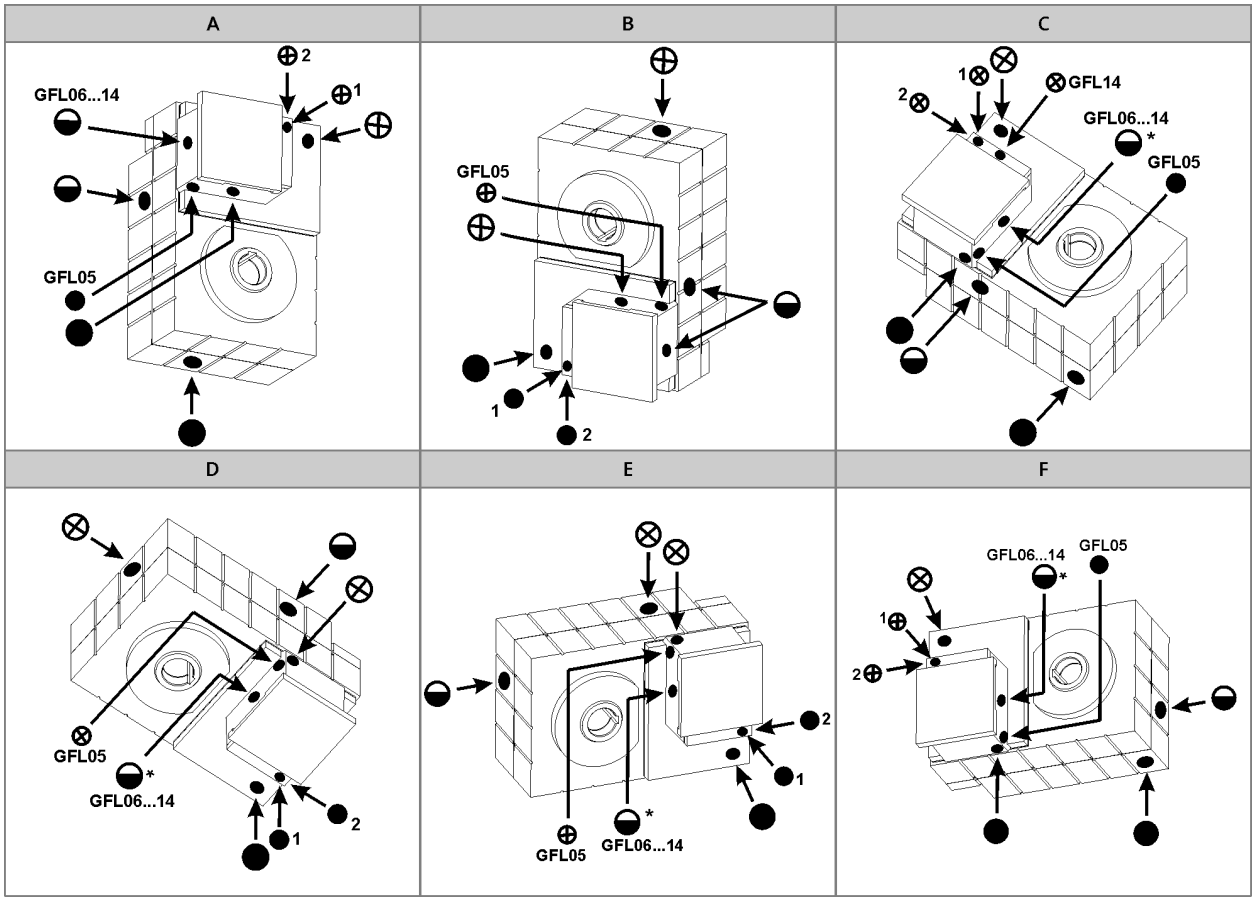

A to F Mounting position
⊗ Ventilation / Oil filler plug
● Oil drain plug
◒ Oil control plug
* On both sides
** On opposite side

Pos.1 standard
Pos.2 only for:
- GFL07-3M □□□ 090□□□
- GFL07-3M □□□ 100□□□
- GFL09-3M □□□ 112□□□

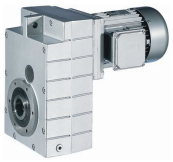

Ventilations

Compensation reservoir for mounting position C

GFL□□-2

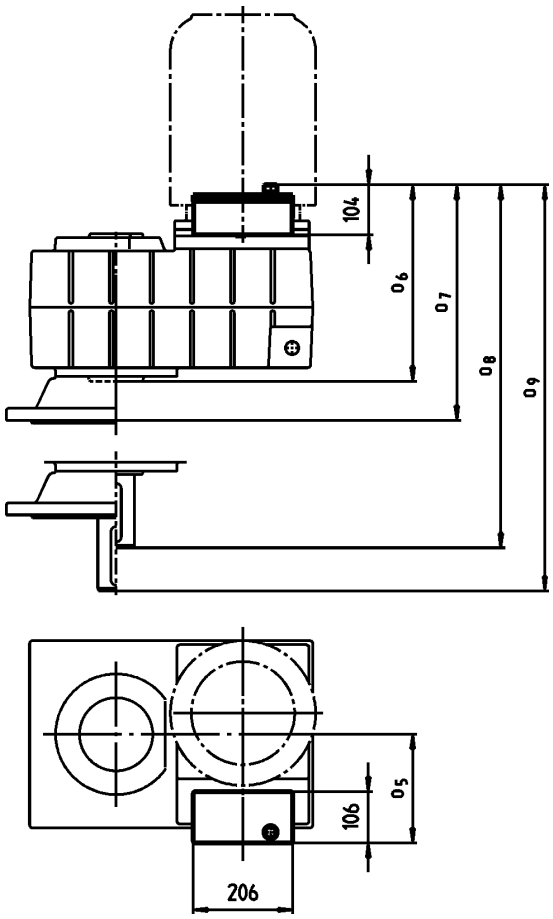

Motor	090 100					112				
	o_5	o_6	o_7	o_8	o_9	o_5	o_6	o_7	o_8	o_9
	[mm]	[mm]	[mm]	[mm]	[mm]	[mm]	[mm]	[mm]	[mm]	[mm]
GFL09	165	344	405	464	525	187	344	405	464	525
GFL11	154	387	448	547	608	176	391	452	551	612
GFL14						181	446	507	646	707

Motor	132					160 180 225				
	o_5	o_6	o_7	o_8	o_9	o_5	o_6	o_7	o_8	o_9
	[mm]	[mm]	[mm]	[mm]	[mm]	[mm]	[mm]	[mm]	[mm]	[mm]
GFL09	204	344	405	464	525	219	344	405	464	525
GFL11	200	391	452	551	612	214	391	452	551	612
GFL14	211	446	507	646	707	211	446	507	646	707

- Terminal box position 3 not permitted.
- Foot in position 3 not permitted.

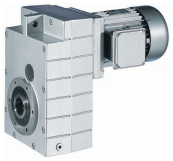

GKS helical-bevel gearboxes

Mains operation
5.5 ... 45 kW (efficiency class IE3)

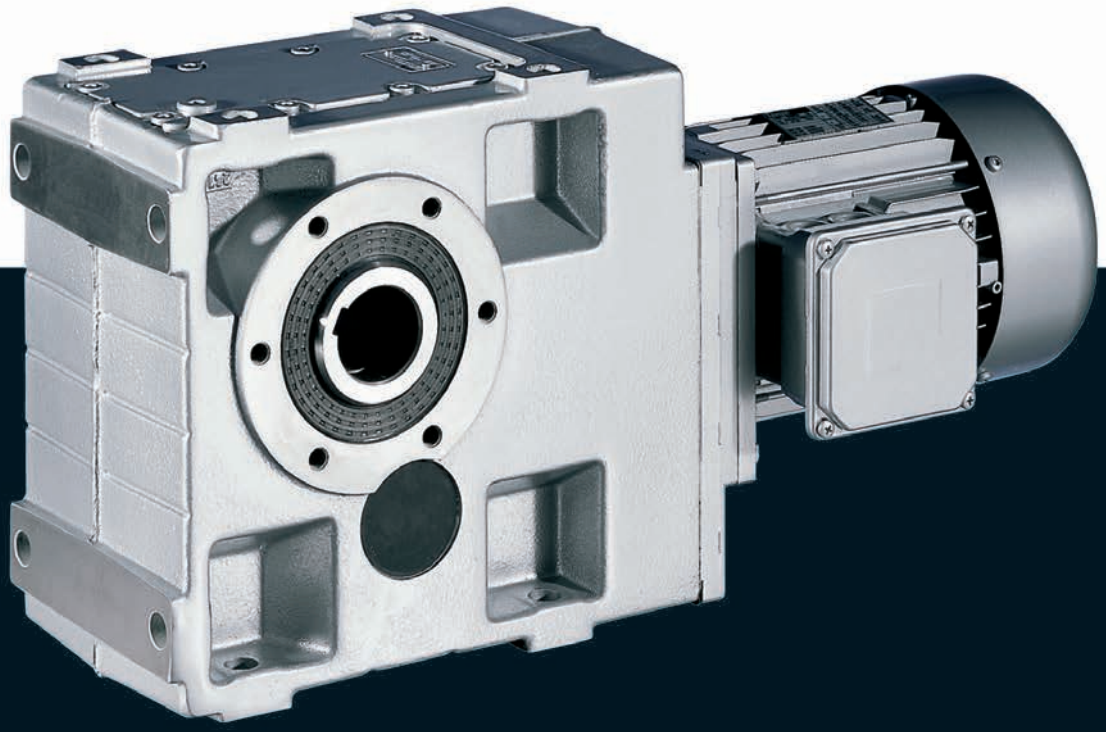

GKS helical-bevel gearbox

Contents



General information	List of abbreviations	6.4 - 4
	Product key	6.4 - 5
	Product information	6.4 - 7
	Functions and features	6.4 - 8
	Dimensioning	6.4 - 13
	Notes on ordering	6.4 - 17
	Ordering details checklist	6.4 - 18
Technical data	Permissible radial and axial forces at output	6.4 - 21
	Output backlash in angular minutes	6.4 - 25
	Moments of inertia	6.4 - 26
	Weights, 4-pole motors	6.4 - 33
	Additional weights for gearboxes	6.4 - 34
	Selection tables, 4-pole motors	6.4 - 35
	Dimensions, 4-pole motors	6.4 - 46
Accessories	Hollow shaft with shrink disc	6.4 - 79
	Mounting set for hollow shaft circlip: Proposed design for auxiliary tools	6.4 - 80
	Hoseproof hollow shaft cover	6.4 - 81
	Gearboxes with 2nd output shaft end	6.4 - 82
	Torque plate on threaded pitch circle	6.4 - 83
	Torque plate at housing foot	6.4 - 84
	Ventilations	6.4 - 85



List of abbreviations

$\eta_{c=1}$		Efficiency
c		Load capacity
f_N	[Hz]	Rated frequency
$F_{ax,max}$	[N]	Max. axial force
$F_{rad,max}$	[N]	Max. radial force
H_{max}	[m]	Site altitude
i		Ratio
J	[kgcm²]	Moment of inertia
m	[kg]	Mass
M_2	[Nm]	Output torque
n_2	[r/min]	Output speed
n_N	[r/min]	Rated speed
P_N	[kW]	Rated power
$S_{hü}$	[1/h]	Transition operating frequency
$T_{opr,max}$	[°C]	Max. ambient operating temperature
$T_{opr,min}$	[°C]	Min. ambient operating temperature
$U_{N,\Delta}$	[V]	Rated voltage
$U_{N,Y}$	[V]	Rated voltage

CE	Communauté Européenne
CSA	Canadian Standards Association
DIN	Deutsches Institut für Normung e.V.
EMC	Electromagnetic compatibility
EN	European standard
IEC	International Electrotechnical Commission
IM	International Mounting Code
IP	International Protection Code
NEMA	National Electrical Manufacturers Association
UL	Underwriters Laboratory Listed Product
UR	Underwriters Laboratory Recognized Product
VDE	Verband deutscher Elektrotechniker (Association of German Electrical Engineers)
CCC	China Compulsory Certificate
GOST	Certificate for Russian Federation
cURus	Combined certification marks of UL for the USA and Canada
UkrSEPRO	Certificate for Ukraine



Product key

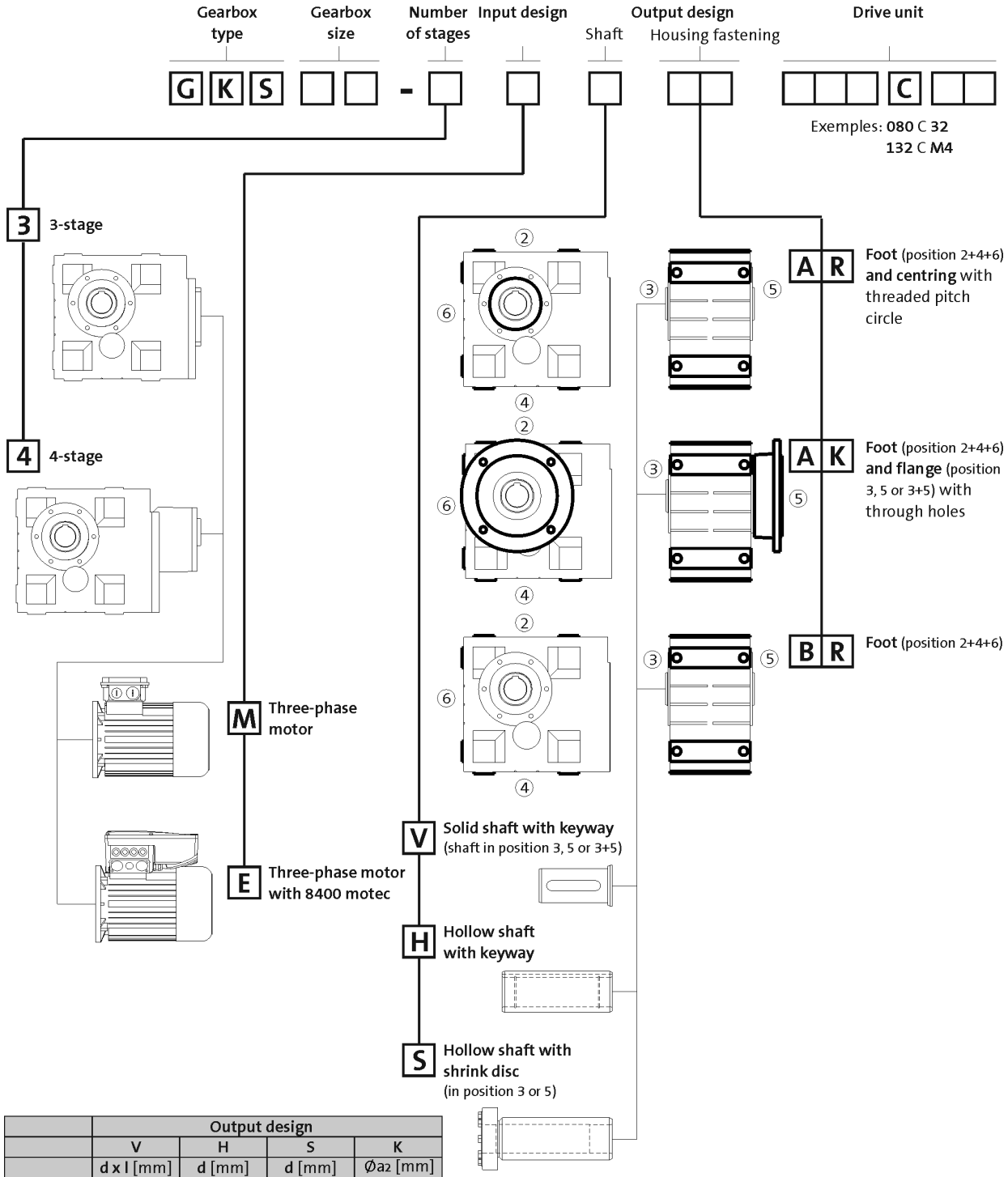

	Output design			
	V	H	S	K
	d x l [mm]	d [mm]	d [mm]	Øa2 [mm]
GKS04-3	25x50	25/30	25/30	160
GKS05-3/4	30x60	30/35	35	200
GKS06-3/4	40x80	40/45	40	200[1)]/250
GKS07-3/4	50x100	50/55	50	250/300
GKS09-3/4	60x120	60/70	65	350
GKS11-3/4	80x160	70/80	80	400/450
GKS14-3/4	100x200	100	100	450

[1)] Only in the case of H and S type of output



Product key

Mounting position (A to F) and position of system blocks (1 to 6)

A	B	C
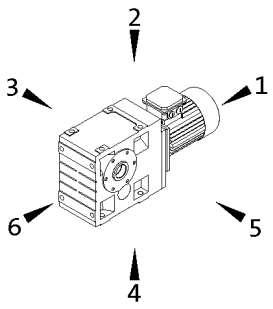	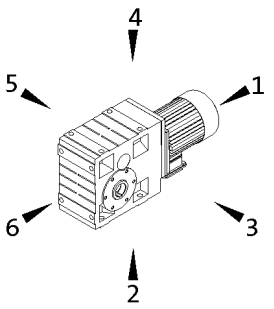	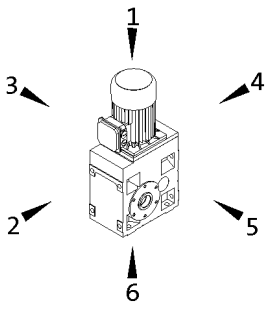
D	**E**	**F**
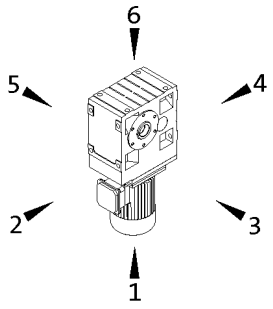	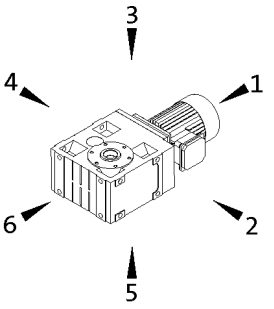	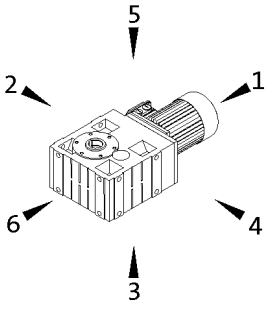

Hollow shaft: 0
Solid shaft: 3, 5, 8 (3+5)
Hollow shaft with shrink disc: 3, 5

Without flange: 0
Flange: 3, 5, 8 (3+5)
Terminal box / motec: 2, 3, 4, 5

Gearbox designs

Basic versions	
Motor efficiency	Standard efficiency Increased efficiency (IE2) Premium efficiency (IE3)
Surface and corrosion protection	OKS-G (primer: grey) OKS-S (paint: RAL 7012)
Lubricant	CLP 460 (mineral)
Ventilation	Oil control plugs for GKS05 to 14 Breather elements for GKS06 ... 14

Options	
Surface and corrosion protection	OKS-S (special paint according to RAL) OKS-M (special paint according to RAL) OKS-L (special paint according to RAL)
Lubricant	CLP HC 320 (synthetic) CLP HC 220 USDA H1 (synthetic)
Shaft sealing rings	Driven shaft: Viton
Ventilation	Breather elements for GKS05 Compensation reservoir for GKS09 to 14-3 in mounting position C
Accessories	Torque plate on threaded pitch circle Housing foot torque plate 2nd output shaft end Shrink disc cover Hoseproof hollow shaft cover Mounting set for hollow shaft circlip
Nameplate	Metal nameplate (supplied loose) Adhesive nameplate (supplied loose)

GKS helical-bevel gearbox

General information



Product information

Lenze provides a geared motor construction kit, which covers a wide range of requirements. Numerous drive-side and output-side options enable precise adaptation of the drive to the specific application. This is the basis for versatile applications and functional scalability of our gearboxes and geared motors.
The modular concept and high power density make extremely compact sizes possible. Optimised teeth profiles and ground gears ensure low-noise operation and low backlash. The gearboxes are of compact and hence space-saving construction.

Types

- 3- and 4-stage gearboxes
- Hollow shaft with keyway or shrink disc
- Solid shaft with keyway
- Foot or flange mounting
- Torque plate, including rubber buffer
- With m200 three-phase AC motors (efficiency class IE3) in the power range 5.5 ... 45 kW

For maximum precision

Helical-bevel gearboxes have the major benefit of enabling extremely precise and reproducible positioning movements owing to their high torsional stiffness and low backlash. Our helical-bevel gearboxes can be combined with three-phase AC motors and servo motors to form a compact unit. They are available in 3- and 4-stage versions with a torque of up to 11,639 Nm and a ratio of up to i=1,936.

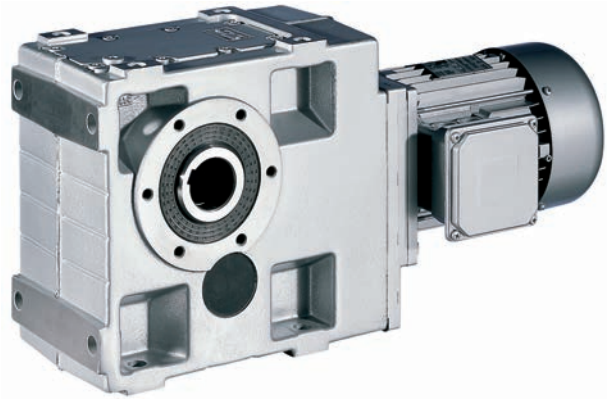



Functions and features

Gearbox type	GKS
Housing	
Design	Cuboid
Material	Aluminium / cast iron
Solid shaft	
Design	with keyway to DIN 6885
Tolerance	k6 (d ≤ 50 mm) m6 (d > 50 mm)
Material	Tempered steel C45 or 42CrMo4
Hollow shaft	
Design	H: with keyway S: smooth
Tolerance	Bore H7
Material	Tempered steel C45
Toothed parts	
Design	Ground tooth flanks Optimised tooth flank geometry
Material	Case-hardened steel
Shaft-hub joint	
	1st stage/prestage/helical (bevel) gearbox: Friction-type connection Output stage (= 2nd, 3rd or 4th stage): Friction-type or positive-fit connection
Shaft sealing rings	
Design	With dust lip
Material	NB / FP
Bearing	
Design	Ball bearing / tapered-roller bearing depending on size and design
Lubricants	
Standard	DIN 51502
Quantities	corresponding to mounting position (see operating instructions)
Mechanical efficiency	
1-stage gearboxes [$\eta_{c=1}$]	
2-stage gearboxes [$\eta_{c=1}$]	
3-stage gearboxes [$\eta_{c=1}$]	0.95
4-stage gearboxes [$\eta_{c=1}$]	0.93
Notes	



Functions and features

Lubricants

Lenze gearboxes and geared motors are ready for operation on delivery and are filled with lubricants specific to both the drive and the design. The mounting position and design specified in the order are key factors in choosing the volume of lubricant.

The lubricants listed in the lubricant table are approved for use in Lenze drives.

Lubricant table

Mode	CLP 460	CLP HC 320	CLP HC 220 USDA H1
Ambient temperature [°C]	0 ... +40	-25 ... +50	-20 ... +40
Specification	Mineral based oil with additives	Synthetic-based oil (synthetic hydrocarbon / poly-alpha-olefin oil)	
Note			For food processing industry
Changing interval	16000 operating hours not later than after three years (oil temperature 70 to 80 °C)	25000 operating hours not later than after three years (oil temperature 70 to 80 °C)	16000 operating hours not later than after three years (oil temperature 70 to 80 °C)
Fuchs	Fuchs Renolin CLP 460	Fuchs Renolin Unisyn CLP 320	bremer & leguil Cassida Fluid GL 220
Klüber	Klüberoil GEM1-460 N	Klübersynth GEM4-320 N	Klüberoil 4 UH1-220 N
Shell	Shell Omala S2 G 460	Shell Omala S4 GX HD 320	

► Please contact your Lenze sales office if you are operating at ambient temperatures in areas up to< -20 °C bzw. > or up to +40°C.



Functions and features

Surface and corrosion protection

For optimum protection of geared motors against ambient conditions, the surface and corrosion protection system (OKS) offers tailor-made solutions.

Various surface coatings combined with other protective measures ensure that the geared motors operate reliably even at high air humidity, in outdoor installations or in the presence of atmospheric impurities. Any colour from the RAL Classic collection can be chosen for the top coat. The geared motors are also available unpainted (no surface and corrosion protection).

Surface and corrosion protection system	Applications	Measures
	Catalogue text	Catalogue text
OKS-G (primed)	• Dependent on subsequent top coat applied	• 2K PUR priming coat (grey) • Zinc-coated screws • Rust-free breather elements Optional measures • Stainless steel nameplate
OKS-S (small)	• Standard applications • Internal installation in heated buildings • Air humidity up to 90%	• Surface coating as per corrosivity category C1 (in line with EN 12944-2) • Zinc-coated screws • Rust-free breather elements Optional measures • Stainless steel nameplate
OKS-M (medium)	• Internal installation in non-heated buildings • Covered, protected external installation • Air humidity up to 95%	• Surface coating as per corrosivity category C2 (in line with EN 12944-2) • Zinc-coated screws • Rust-free breather elements Optional measures • Stainless steel shaft • Stainless steel nameplate • Rust-free shrink disc (on request)
OKS-L (high)	• External installation • Air humidity above 95% • Chemical industry plants • Food industry	• Surface coating as per corrosivity category C3 (in line with EN 12944-2) • Blower cover and B end shield additionally primed • Cable glands with gaskets • Corrosion-resistant brake with cover ring, stainless friction plate, and chrome-plated armature plate (on request) • All screws/screw plugs zinc-coated • Stainless breather elements • Threaded holes that are not used are closed by means of plastic plugs Optional measures • Sealed recesses on motor (on request) • Stainless steel shaft • Stainless steel nameplate • Rust-free shrink disc (on request) • Additional priming coat on cast iron fan • Oil expansion tank and torque plates painted separately and supplied loose



Functions and features

Structure of surface coating

Surface and corrosion protection system	Corrosivity category	Surface coating	Colour
	DIN EN ISO 12944-2	Structure	
Without OKS (uncoated)		Dipping primed gearbox	
OKS-G (primed)		Dipping primed gearbox 2K PUR priming coat	
OKS-S (small)	Comparable to C1	Dipping primed gearbox 2K-PUR top coat	Standard: RAL 7012 Optional: RAL Classic
OKS-M (medium)	Comparable to C2	Dipping primed gearbox 2K PUR priming coat 2K-PUR top coat	Standard: RAL 7012 Optional: RAL Classic
OKS-L (high)	Comparable to C3	Dipping primed gearbox 2K PUR priming coat 2K-PUR top coat	Standard: RAL 7012 Optional: RAL Classic



Functions and features

Ventilation

Non-ventilated gearboxes
No ventilation is required for gearbox GKS04.

Gearboxes that may optionally be equipped with ventilation
Special measures are not usually required when using the GST05 gearbox. In borderline cases, e.g. at input speeds > 2000 r/min, we recommend the use of breather elements, which we can supply if required.

Ventilated gearboxes
Gearboxes GKS06 to 14 are supplied with breather elements as standard.

Special measures for mounting position C (motor on top)
We recommend that an oil compensation reservoir is always used with gearbox sizes G□□09 to 14 in this mounting position. This reservoir can be purchased as an option. For illustrations and measures, please refer to the Accessories chapter.

This is not required at higher ratios or low input speeds. Please contact Lenze for confirmation in this case.



Dimensioning

General information about the data provided in this catalogue

The powers, torques and speeds specified in this catalogue are rounded values and are valid under the following conditions:

- Operating time/day = 8 h (100% OT)
- Duty class I for up to 10 switching operations/h
- Mounting positions and designs in this catalogue
- Standard lubricant
- T_{amb} = 20 °C for gearboxes,
  T_{amb} = 40 °C for motors (in accordance with EN 60034)
- Site altitude < = 1000 m amsl
- The selection tables provide the permissible mechanical powers and torques. For notes on the thermal power limit, see chapter drive dimensioning.
- The rated power specified for motors and geared motors applies to operating mode S1 (in accordance with EN 60034).

Under different operating conditions, the values obtained may vary from those listed here.
In the case of extreme operating conditions, please consult your Lenze sales office.



Dimensioning

Thermal power limit

The thermal power limit, defined by the heat balance, limits the permissible gearbox continuous power. It may be less than the mechanical power ratings listed in the selection tables.

The thermal power limit is affected by:
- the churning losses in the lubricant. These are determined by the mounting position and the circumferential speed of the gears;
- the load and the speed
- the ambient conditions: temperature, air circulation, input or dissipation via shafts and the foundation

Please consult your Lenze sales office
- if the following input speeds n_1 are exceeded on a continuous basis (continuous is defined as more than 8 h/day):

Motor frame size	Mounting position A, B, E, F	Mounting position C, D
063 ... 100	3000 r/min	3000 r/min
112 ... 132	3000 r/min	1500 r/min
160 ... 225	2000 r/min	1500 r/min

- if the following input speeds n_1 are exceeded:

Motor frame size	Mounting position A, B, E, F	Mounting position C, D
063 ... 100	4000 r/min	3000 r/min
112 ... 132	4000 r/min	2000 r/min
160 ... 225	3000 r/min	1500 r/min

- or if you are using the following gearbox type, size and ratio combinations at an input speed of n_1 > 1500 r/min:

Gearbox type	Gearbox size	Ratio i
GKS helical-bevel gearbox	07, 09, 11, 14	≤ 25

Possible ways of extending the application area

- synthetic lubricant (option)
- shaft sealing rings made from FP material/Viton (option)
- reduction in lubricant quantity
- cooling of the geared motor by means of air convection on the machine/system



Dimensioning

Load capacity and application factor

Load capacity c of gearbox
Rated value for the load capacity of Lenze geared motors.
- c is the ratio of the permissible rated torque of the gearbox to the rated torque supplied by the drive component (e.g. the built-in Lenze motor).
- The value of c must always be greater than the value of the application factor k calculated for the application.

Requierement: c ≥ k

Application factor k (according to DIN 3990)
Takes into account the influence of temporally variable loads which are actually present during the anticipated operating time of gearboxes and geared motors.
k is determined by:
- the type of load
- the load intensity
- temporal influences

Duty class	Load type	Intensity	
I	Smooth operation, small or light jolts	$F_I \leq 1.25$	$F_I = \frac{\frac{J_L}{i^2} + J_M + J_B + J_Z}{J_M + J_B + J_Z}$
II	Uneven operation, average jolts	$1.25 < F_I \leq 4$	
III	Uneven operation, severe jolts and/or alternating load	$F_I > 4$	

J_L= moment of inertia of the load
i = gearbox ratio
J_M= moment of inertia of the motor
J_B= moment of inertia of the motor brake
J_Z= moment of inertia of additional built-on motor accessories

Application factor k

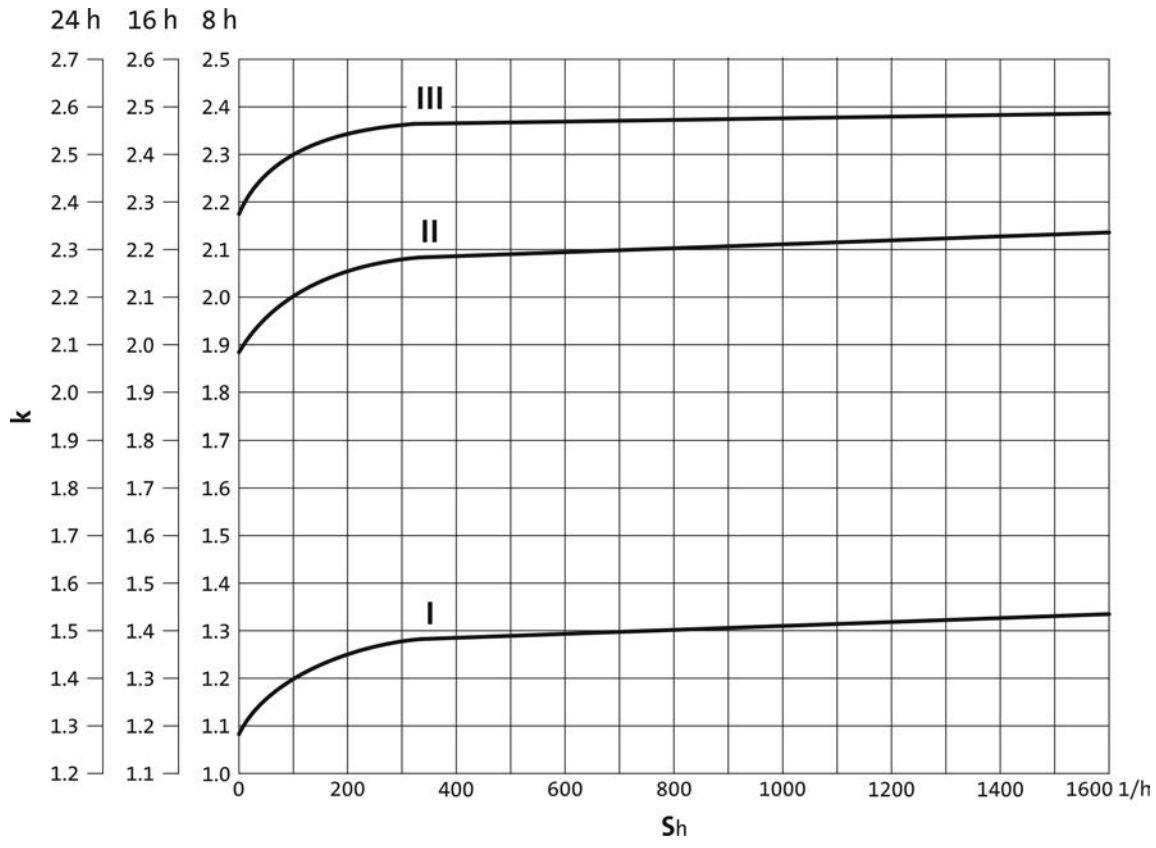

S_h= switching operations/hour



Dimensioning

Notes on the selection tables

The selection tables show the available combinations of gearbox type, number of stages, ratio and motor. They are used only to provide basic orientation.
The following legend indicates the structure of the selection tables.

Rated power Prated of the drive motor depending on the rated frequency

50 Hz: P_N = 5.5 kW

3-stufige Getriebe ← **Number of the gear stage of the gearbox**

Mains operation 400 V, 50 Hz			i	Product		
n_2 [r/min]	M_2 [Nm]	c		GKS	m200	
246	203	2.3	5.955	GKS07	-P132M4	52
226	221	1.2	6.485	GKS06	-P132M4	48

Mains operation
Output speed **n2**
Output torque **M2**

Load capacity c of the gearbox
c is the ratio between the permissible rated torque of the gearbox and the rated torque of the three-phase AC motor (converted to the driven shaft).
c must be always higher than the service factor **k** determined for the application **k**.

Ratio i

Product Gearbox

Product Motor

Page number for dimensions

$$c = \frac{M_{2,zul}}{M_{1N} \cdot i \cdot \eta_{Getr}} > k$$

Motor voltages

The power values and torques indicated in the selection tables refer to the following motor voltages:
- 50 Hz : Δ 400 V

6.4



Notes on ordering

We want to be sure that you receive the correct products in good time.

To allow us to achieve this we need:
- your address and your company data
- our product key for the individual products in this catalogue
- your delivery date and delivery address

Ordering procedure
Please use the ordering information checklist to ensure that you provide all the ordering information required for the various products.

The ordering information checklist, the product key, the basic versions, options, mounting position and position of the system blocks will be found in the General – Product key section.

A list of Lenze's worldwide sales offices can be found on the Internet: www.Lenze.com.



Ordering details checklist

☐ **Offer**

Page __ of __

☐ **Order**

Customer No.

Job No.

Fax No. _____

Sender

Company _____ Made out by (name) _____

Street/P.O. Box _____ Department _____

P.O. Box, City _____ Telephone No. _____

Date _____ Signature _____

Delivery address (if different)

Street/P.O. Box _____ Desired delivery date _____

P.O. Box, City _____ Dispatching notes _____

Invoice recipient (if different)

Street/P.O. Box _____

Postal code, City _____



Ordering details checklist

Customer No. ☐☐☐☐☐☐☐☐

Job No. ☐☐☐☐☐☐☐☐☐☐

Page __

Quantity ☐☐☐☐

Efficiency class ☐ High efficiency (IE3)

Rated frequency ☐ 50 Hz

Ratio i ☐☐☐☐

GKS ☐☐ – 3 / 4 M / E V / H / S A / B R / K

Motor frame size ☐☐☐C☐☐

Hollow shaft d = ☐ mm

Flange a_2 = ☐ mm

Mounting position A ☐ B ☐ C ☐ D ☐ E ☐ F ☐

Position of system blocks

Shaft/shrink disc				Flange				Terminal box			
0	3	4	8	0	3	5	8	2	3	4	5
☐	☐	☐	☐	☐	☐	☐	☐	☐	☐	☐	☐

Surface and corrosion protection

☐ OKS-S colour: RAL 7012

☐ OKS-G (primed)

Options

Special lubricants

☐ CLP HC 320 (synthetic)

☐ CLP HC 220 USDA H1 (for the food industry)

Surface and corrosion protection

☐ OKS-S (small)

☐ OKS-M (medium)

RAL ☐☐☐☐

☐ OKS-L (high)

☐ OKS-G (primed)

Accessories

☐ Torque support for housing foot

☐ Torque support for threaded pitch circle

☐ 2nd output shaft end

☐ Mounting set for hollow-shaft circlip

☐ Shrink disc cover

☐ Hollow shaft cover, hoseproof

Shaft sealing rings

☐ Viton

Breathing

☐ Breather elements for GKS05

☐ Compensation reservoir in mounting position for GKS09 ... 14-3



Ordering details checklist

Three-phase AC motors options

Customer No. ☐☐☐☐☐☐☐☐ **Job No.** ☐☐☐☐☐☐☐☐☐☐ Page __

Motor connection

Terminal box ☐

Cable entry in position 1 ☐ 2 ☐ 3 ☐ 4 ☐ 5 ☐

Spring-applied brake

Brake version ☐ Standard

Brake size ☐

Characteristic torque ☐ Nm

Rated voltage AC ☐ DC ☐ ☐ V

Rectifier Only in the case of AC supply voltage

☐ Half-wave rectifier ☐ Bridge rectifier

Brake options Manual release lever in position 2 ☐ 3 ☐ 4 ☐ 5 ☐

Motor protection

☐ TKO ☐ PTC

Further options

☐ 2nd nameplate (adhesive nameplate/metal nameplate)



Permissible radial and axial forces at output

Permissible radial force
$F_{rad,per} = \min(f_w \times f_\alpha \times F_{rad,max}$; $f_w \times F_{rad,max}$ at $n_2 \leq 16$ r/min)

Permissible axial force
$F_{ax,per} = F_{ax,max}$ if $F_{rad} = 0$

If F_{rad} **and** $F_{ax} \neq 0$, please contact your Lenze sales office.

Application of forces

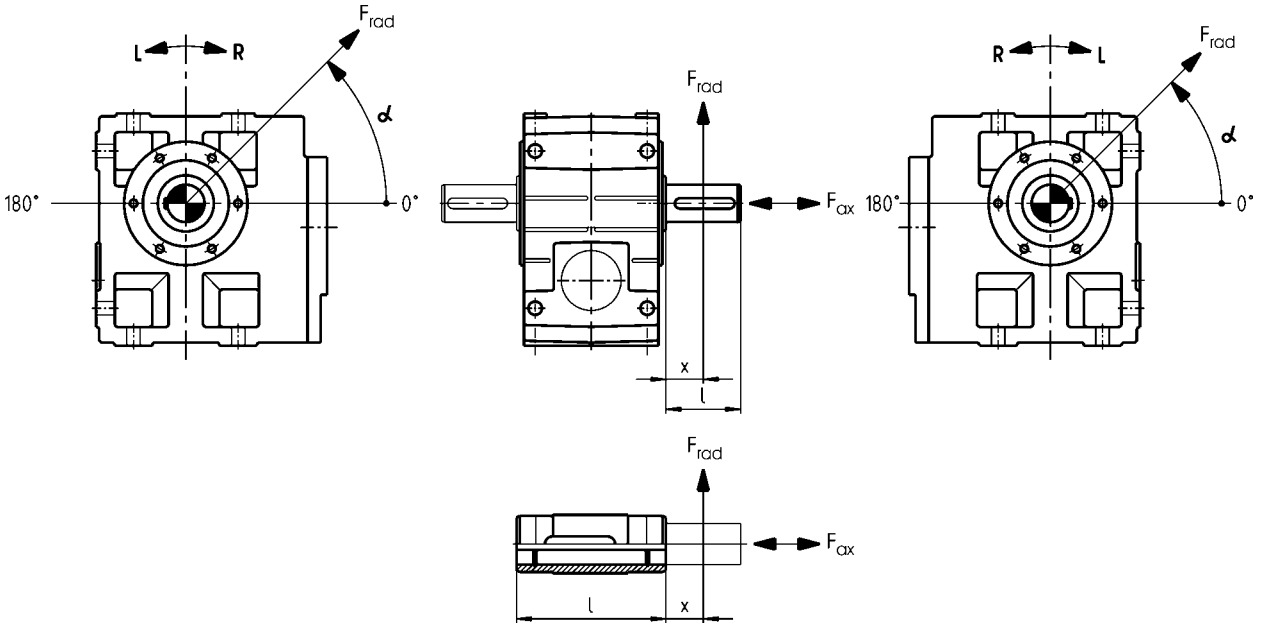

Effective direction factor f_α at output shaft

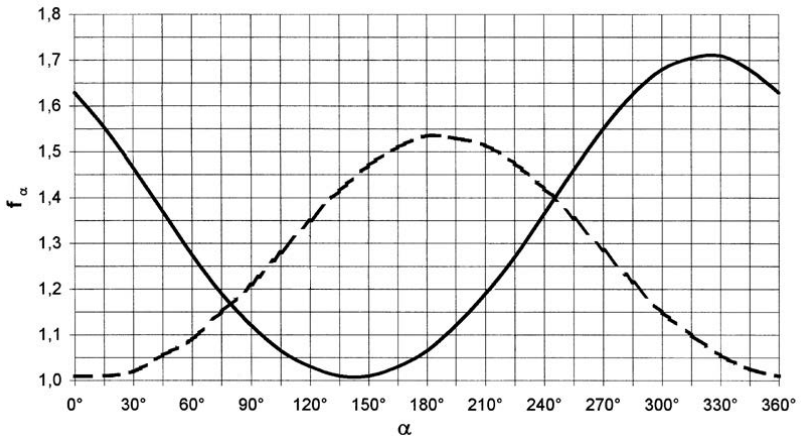

——— Direction of rotation R
— — — Direction of rotation L



Permissible radial and axial forces at output

Additional load factor f_w at output shaft

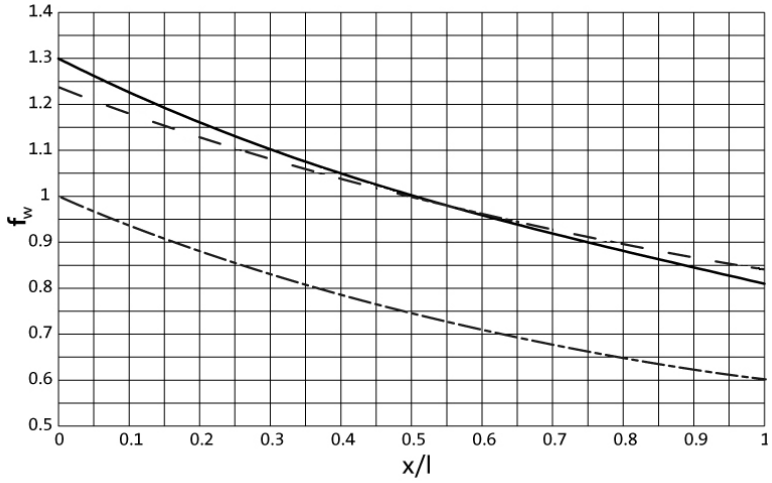

——— Solid shaft (V□□)
— · — Hollow shaft (H□□)
— — — Solid shaft with flange (V□K)

GKS□□-3/4□ H□□

Size	n_2 [r/min]								
Gearbox	630	400	250	160	100	63	40	25	≤16

	Max. radial force, Hollow shaft								
	$F_{rad,max}$	$F_{rad,max}$	$F_{rad,max}$	$F_{rad,max}$	$F_{rad,max}$	$F_{rad,max}$	$F_{rad,max}$	$F_{rad,max}$	$F_{rad,max}$
	[N]	[N]	[N]	[N]	[N]	[N]	[N]	[N]	[N]
GKS04	3100	3900	4500	5100	5900	6800	7000	7000	7000
GKS05	2400	3500	4200	4630	5000	6200	7300	7300	7300
GKS06	3000	4600	5600	6400	7000	8200	10400	12000	12000
GKS07		5400	6300	7400	8700	10500	12500	15100	16000
GKS09		7500	8200	9400	10600	12200	15500	21000	24000
GKS11		9000	10000	11000	14000	16000	18500	25000	30000
GKS14		15000	15500	16500	17500	18500	21000	28000	40000

	Max. axial force, Hollow shaft								
	$F_{ax,max}$	$F_{ax,max}$	$F_{ax,max}$	$F_{ax,max}$	$F_{ax,max}$	$F_{ax,max}$	$F_{ax,max}$	$F_{ax,max}$	$F_{ax,max}$
	[N]	[N]	[N]	[N]	[N]	[N]	[N]	[N]	[N]
GKS04	3300	4200	5000	5500	5500	5500	5500	5500	5500
GKS05	2800	3500	4240	5090	6160	6600	6600	6600	6600
GKS06	3500	4440	5580	6930	8710	10000	10000	10000	10000
GKS07		4900	6230	7820	9940	12600	14000	14000	14000
GKS09		6500	7400	8000	10500	13000	17000	21000	21000
GKS11		7000	8000	9200	12000	14500	18500	27000	27000
GKS14		6000	8000	10000	13000	16000	20000	28000	35000

- Application of force F_{rad}: at hollow shaft end face (x = 0)
- $F_{ax,max}$ only valid with F_{rad} = 0
- Neither radial nor axial forces are permissible for the hollow shaft with shrink disc (S□□).



Permissible radial and axial forces at output

GKS□□-3/4□ V□R

Size	n_2 [r/min]								
Gearbox	630	400	250	160	100	63	40	25	≤16

	Max. radial force, Solid shaft without flange								
	$F_{rad,max}$	$F_{rad,max}$	$F_{rad,max}$	$F_{rad,max}$	$F_{rad,max}$	$F_{rad,max}$	$F_{rad,max}$	$F_{rad,max}$	$F_{rad,max}$
	[N]	[N]	[N]	[N]	[N]	[N]	[N]	[N]	[N]
GKS04	2400	3000	3400	3600	3600	3600	3600	3600	3600
GKS05	2200	2800	3200	3600	4100	4900	5800	5800	5800
GKS06	2700	3700	4300	4900	5300	6200	7900	9000	9000
GKS07		4000	4900	5800	6600	8000	9600	12000	12000
GKS09 [1)]		6200	6400	7100	8400	9500	11800	16000	18000
GKS11 [1)]		7100	7500	8200	10000	11200	13000	19000	23000
GKS14		57900	61000	64100	65000	65000	65000	65000	65000

	Max. axial force, Solid shaft without flange								
	$F_{ax,max}$	$F_{ax,max}$	$F_{ax,max}$	$F_{ax,max}$	$F_{ax,max}$	$F_{ax,max}$	$F_{ax,max}$	$F_{ax,max}$	$F_{ax,max}$
	[N]	[N]	[N]	[N]	[N]	[N]	[N]	[N]	[N]
GKS04	3300	4200	5000	5500	5500	5500	5500	5500	5500
GKS05	2800	3500	4240	5090	6160	6600	6600	6600	6600
GKS06	3500	4440	5580	6930	8710	10000	10000	10000	10000
GKS07		4900	6230	7820	9940	12600	14000	14000	14000
GKS09 [1)]		6500	7400	8000	10500	13000	17000	21000	21000
GKS11 [1)]		7000	8000	9200	12000	14500	18500	27000	27000
GKS14		35000	35000	35000	35000	35000	35000	35000	35000

[1)] Reinforced output shaft bearings are available on request for V□R versions.

- Application of force F_{rad}: centre of shaft journal (x = l/2)
- $F_{ax,max}$ only valid with F_{rad} = 0



Permissible radial and axial forces at output

GKS□□-3/4□ V□K

Size	n_2 [r/min]								
Gearbox	630	400	250	160	100	63	40	25	≤16

	Max. radial force, Solid shaft with flange								
	$F_{rad,max}$	$F_{rad,max}$	$F_{rad,max}$	$F_{rad,max}$	$F_{rad,max}$	$F_{rad,max}$	$F_{rad,max}$	$F_{rad,max}$	$F_{rad,max}$
	[N]	[N]	[N]	[N]	[N]	[N]	[N]	[N]	[N]
GKS04	3100	3800	4300	4600	4600	4600	4600	4600	4600
GKS05	3800	4640	5420	6280	7000	7000	7000	7000	7000
GKS06	4700	6400	7500	8800	9800	10000	10000	10000	10000
GKS07		7000	8250	9630	11000	13000	14000	14000	14000
GKS09		9900	10500	12000	14000	15000	15000	15000	15000
GKS11		14500	16000	17600	21000	24500	28000	30000	30000
GKS14		20500	23700	27200	31300	35000	41000	43000	43000

	Max. axial force, Solid shaft with flange								
	$F_{ax,max}$	$F_{ax,max}$	$F_{ax,max}$	$F_{ax,max}$	$F_{ax,max}$	$F_{ax,max}$	$F_{ax,max}$	$F_{ax,max}$	$F_{ax,max}$
	[N]	[N]	[N]	[N]	[N]	[N]	[N]	[N]	[N]
GKS04	3300	4200	4400	4400	4400	4400	4400	4400	4400
GKS05	2900	3630	4440	5420	6600	6600	6600	6600	6600
GKS06	3700	4660	5880	7320	9230	10000	10000	10000	10000
GKS07		5700	7000	8500	10400	11500	11500	11500	11500
GKS09		6000	6600	7600	10000	12000	15000	17000	17000
GKS11		7000	7500	8500	10500	13000	17500	27000	27000
GKS14		8400	10000	11500	13000	15000	19000	28000	35000

- Application of force F_{rad}: centre of shaft journal (x = l/2)
- $F_{ax,max}$ only valid with F_{rad} = 0



Output backlash in angular minutes

► Backlash ϕ depending on ratio i

GKS04 to 14-3

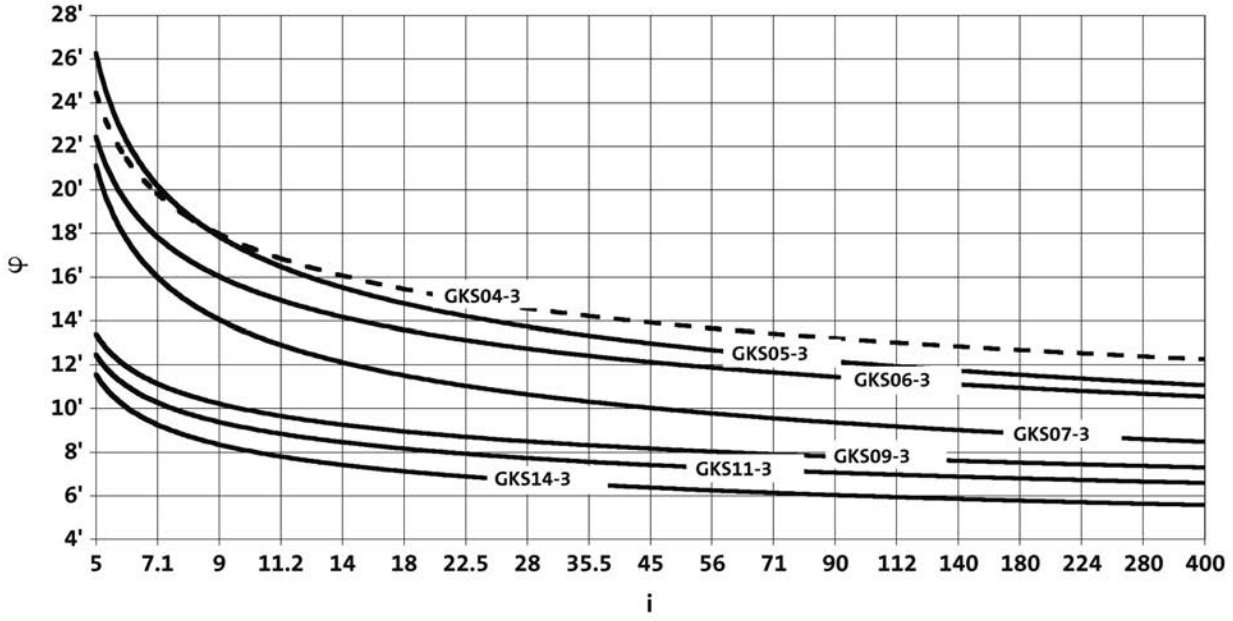

GKS05 to 14-4

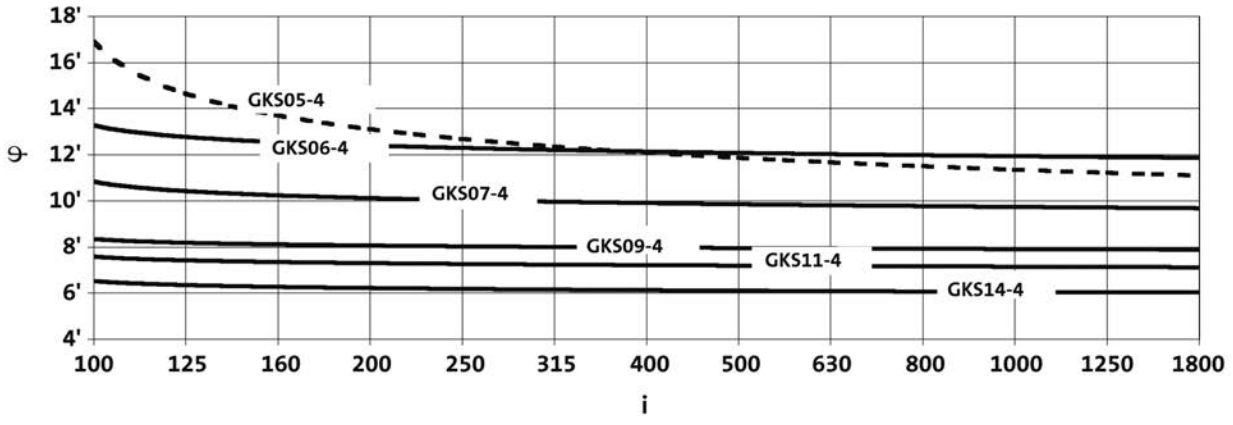

6.4



Moments of inertia

GKS□□-3

► Moment of inertia (J) depending on ratio i

Gearbox			GKS04
5.123	J	[kgcm²]	1.170
7.025	J	[kgcm²]	0.676
8.167	J	[kgcm²]	0.863
8.991	J	[kgcm²]	0.444
11.730	J	[kgcm²]	0.729
13.067	J	[kgcm²]	0.701
14.333	J	[kgcm²]	0.346
16.087	J	[kgcm²]	0.443
17.920	J	[kgcm²]	0.428
20.588	J	[kgcm²]	0.302
22.522	J	[kgcm²]	0.262
25.088	J	[kgcm²]	0.254
28.727	J	[kgcm²]	0.182
32.000	J	[kgcm²]	0.177
35.191	J	[kgcm²]	0.136
39.200	J	[kgcm²]	0.132
44.240	J	[kgcm²]	0.090
50.943	J	[kgcm²]	0.181
56.976	J	[kgcm²]	0.061
64.978	J	[kgcm²]	0.132
72.210	J	[kgcm²]	0.040
79.598	J	[kgcm²]	0.103
90.491	J	[kgcm²]	0.027
100.067	J	[kgcm²]	0.069
111.467	J	[kgcm²]	0.069
128.874	J	[kgcm²]	0.048
143.556	J	[kgcm²]	0.048
163.332	J	[kgcm²]	0.032
181.939	J	[kgcm²]	0.032
204.682	J	[kgcm²]	0.022
228.000	J	[kgcm²]	0.022
269.660	J	[kgcm²]	0.014
300.381	J	[kgcm²]	0.014

Gearbox			GKS05
6.863	J	[kgcm²]	1.900
9.412	J	[kgcm²]	1.170
10.569	J	[kgcm²]	1.600
11.667	J	[kgcm²]	1.647
13.176	J	[kgcm²]	0.711
14.494	J	[kgcm²]	1.045
16.000	J	[kgcm²]	1.040
17.054	J	[kgcm²]	1.505
19.216	J	[kgcm²]	1.474
23.388	J	[kgcm²]	0.964
26.353	J	[kgcm²]	0.948
29.931	J	[kgcm²]	0.674
32.744	J	[kgcm²]	0.584
36.894	J	[kgcm²]	0.576
41.765	J	[kgcm²]	0.419
47.059	J	[kgcm²]	0.414
51.162	J	[kgcm²]	0.321
57.647	J	[kgcm²]	0.317
66.592	J	[kgcm²]	0.200
75.033	J	[kgcm²]	0.198
82.833	J	[kgcm²]	0.145
93.333	J	[kgcm²]	0.144
107.196	J	[kgcm²]	0.091
120.784	J	[kgcm²]	0.091
130.097	J	[kgcm²]	0.067
146.588	J	[kgcm²]	0.066
166.276	J	[kgcm²]	0.043
187.353	J	[kgcm²]	0.042
211.200	J	[kgcm²]	0.081
227.484	J	[kgcm²]	0.060
256.320	J	[kgcm²]	0.060
290.745	J	[kgcm²]	0.038
327.600	J	[kgcm²]	0.038

► The moments of inertia relate to the drive shaft of the gearbox.
► The total moment of inertia is calculated by adding the values of the gearbox, motor and accessories.



Moments of inertia

GKS□□-3

► Moment of inertia (J) depending on ratio i

Gearbox			GKS06
6.485	J	[kgcm²]	5.870
9.196	J	[kgcm²]	5.048
10.147	J	[kgcm²]	4.858
11.382	J	[kgcm²]	2.492
12.612	J	[kgcm²]	3.199
14.824	J	[kgcm²]	4.287
16.699	J	[kgcm²]	4.163
17.809	J	[kgcm²]	2.126
20.329	J	[kgcm²]	2.794
22.902	J	[kgcm²]	2.729
26.017	J	[kgcm²]	1.941
28.461	J	[kgcm²]	1.666
32.063	J	[kgcm²]	1.632
36.303	J	[kgcm²]	1.183
41.472	J	[kgcm²]	2.110
44.471	J	[kgcm²]	0.900
53.074	J	[kgcm²]	1.523
57.882	J	[kgcm²]	0.578
65.207	J	[kgcm²]	0.570
72.000	J	[kgcm²]	0.422
81.111	J	[kgcm²]	0.416
93.176	J	[kgcm²]	0.257
104.967	J	[kgcm²]	0.254
113.082	J	[kgcm²]	0.189
127.392	J	[kgcm²]	0.186
142.941	J	[kgcm²]	0.122
161.029	J	[kgcm²]	0.121
190.080	J	[kgcm²]	0.227
214.133	J	[kgcm²]	0.226
230.688	J	[kgcm²]	0.168
259.880	J	[kgcm²]	0.167
291.600	J	[kgcm²]	0.109
328.500	J	[kgcm²]	0.109

Gearbox			GKS07
5.955	J	[kgcm²]	19.300
8.254	J	[kgcm²]	11.800
9.171	J	[kgcm²]	16.000
10.124	J	[kgcm²]	15.882
11.378	J	[kgcm²]	7.019
12.711	J	[kgcm²]	10.164
14.798	J	[kgcm²]	14.306
16.674	J	[kgcm²]	13.965
17.270	J	[kgcm²]	7.258
20.511	J	[kgcm²]	9.084
23.111	J	[kgcm²]	8.906
25.244	J	[kgcm²]	6.716
28.274	J	[kgcm²]	5.567
31.858	J	[kgcm²]	5.473
36.063	J	[kgcm²]	3.650
40.906	J	[kgcm²]	6.934
44.178	J	[kgcm²]	2.779
50.345	J	[kgcm²]	5.298
57.501	J	[kgcm²]	1.748
64.790	J	[kgcm²]	1.725
70.474	J	[kgcm²]	1.295
79.407	J	[kgcm²]	1.280
92.563	J	[kgcm²]	0.808
104.296	J	[kgcm²]	0.799
112.338	J	[kgcm²]	0.592
126.578	J	[kgcm²]	0.586
140.548	J	[kgcm²]	1.113
158.364	J	[kgcm²]	1.113
184.600	J	[kgcm²]	0.687
208.000	J	[kgcm²]	0.685
224.037	J	[kgcm²]	0.510
252.436	J	[kgcm²]	0.509
283.193	J	[kgcm²]	0.330
319.091	J	[kgcm²]	0.329

► The moments of inertia relate to the drive shaft of the gearbox.
► The total moment of inertia is calculated by adding the values of the gearbox, motor and accessories.



Moments of inertia

GKS□□-3

► Moment of inertia (J) depending on ratio i

Gearbox			GKS09
12.283	J	[kgcm²]	34.200
13.360	J	[kgcm²]	33.400
16.122	J	[kgcm²]	22.600
17.536	J	[kgcm²]	22.200
19.541	J	[kgcm²]	30.600
22.022	J	[kgcm²]	29.900
25.649	J	[kgcm²]	20.500
29.228	J	[kgcm²]	15.900
32.940	J	[kgcm²]	15.600
35.193	J	[kgcm²]	12.200
39.662	J	[kgcm²]	12.000
43.146	J	[kgcm²]	9.000
48.625	J	[kgcm²]	8.870
58.456	J	[kgcm²]	5.540
65.879	J	[kgcm²]	5.470
70.982	J	[kgcm²]	4.140
79.996	J	[kgcm²]	4.100
91.860	J	[kgcm²]	2.630
103.524	J	[kgcm²]	2.610
111.484	J	[kgcm²]	1.920
125.641	J	[kgcm²]	1.900
140.921	J	[kgcm²]	1.260
158.816	J	[kgcm²]	1.250
182.000	J	[kgcm²]	2.250
205.111	J	[kgcm²]	2.240
220.882	J	[kgcm²]	1.660
248.930	J	[kgcm²]	1.650
279.205	J	[kgcm²]	1.100
314.659	J	[kgcm²]	1.100

Gearbox			GKS11
12.094	J	[kgcm²]	104.000
13.154	J	[kgcm²]	101.000
15.874	J	[kgcm²]	68.000
17.265	J	[kgcm²]	66.500
19.515	J	[kgcm²]	90.300
21.989	J	[kgcm²]	90.400
25.615	J	[kgcm²]	61.200
28.021	J	[kgcm²]	52.200
31.573	J	[kgcm²]	51.300
35.741	J	[kgcm²]	36.800
40.272	J	[kgcm²]	36.200
43.783	J	[kgcm²]	27.900
49.333	J	[kgcm²]	27.500
57.683	J	[kgcm²]	17.700
64.995	J	[kgcm²]	17.500
70.887	J	[kgcm²]	13.000
79.873	J	[kgcm²]	12.900
91.737	J	[kgcm²]	8.300
103.365	J	[kgcm²]	8.210
111.335	J	[kgcm²]	6.050
125.448	J	[kgcm²]	5.990
140.732	J	[kgcm²]	3.960
158.571	J	[kgcm²]	3.930
186.572	J	[kgcm²]	7.070
210.222	J	[kgcm²]	7.050
226.431	J	[kgcm²]	5.210
255.133	J	[kgcm²]	5.200
286.219	J	[kgcm²]	3.440
322.500	J	[kgcm²]	3.430

► The moments of inertia relate to the drive shaft of the gearbox.
► The total moment of inertia is calculated by adding the values of the gearbox, motor and accessories.



Moments of inertia

GKS□□-3

► Moment of inertia (J) depending on ratio i

Gearbox			GKS14
12.435	J	[kgcm²]	283.000
13.525	J	[kgcm²]	275.000
16.646	J	[kgcm²]	198.000
18.311	J	[kgcm²]	173.000
20.065	J	[kgcm²]	249.000
22.609	J	[kgcm²]	243.000
24.696	J	[kgcm²]	183.000
27.165	J	[kgcm²]	159.000
30.609	J	[kgcm²]	156.000
34.692	J	[kgcm²]	111.000
39.089	J	[kgcm²]	109.000
42.531	J	[kgcm²]	82.400
47.923	J	[kgcm²]	81.100
56.251	J	[kgcm²]	54.200
63.382	J	[kgcm²]	53.500
68.942	J	[kgcm²]	38.900
77.681	J	[kgcm²]	38.400
90.551	J	[kgcm²]	25.100
102.029	J	[kgcm²]	24.900
109.896	J	[kgcm²]	18.300
123.826	J	[kgcm²]	18.100
138.913	J	[kgcm²]	12.000
156.522	J	[kgcm²]	11.900
186.572	J	[kgcm²]	21.600
210.222	J	[kgcm²]	21.500
226.431	J	[kgcm²]	15.900
255.133	J	[kgcm²]	15.800
286.219	J	[kgcm²]	10.500
322.500	J	[kgcm²]	10.500

► The moments of inertia relate to the drive shaft of the gearbox.
► The total moment of inertia is calculated by adding the values of the gearbox, motor and accessories.



Moments of inertia

GKS□□-4

► Moment of inertia (J) depending on ratio i

Gearbox			GKS05
95.238	J	[kgcm²]	0.143
114.987	J	[kgcm²]	0.196
126.933	J	[kgcm²]	0.196
146.667	J	[kgcm²]	0.142
161.905	J	[kgcm²]	0.141
185.547	J	[kgcm²]	0.195
209.067	J	[kgcm²]	0.195
225.867	J	[kgcm²]	0.073
236.667	J	[kgcm²]	0.141
289.917	J	[kgcm²]	0.108
326.667	J	[kgcm²]	0.108
364.467	J	[kgcm²]	0.073
410.667	J	[kgcm²]	0.073
469.389	J	[kgcm²]	0.050
510.000	J	[kgcm²]	0.023
528.889	J	[kgcm²]	0.050
594.894	J	[kgcm²]	0.033
670.303	J	[kgcm²]	0.033
820.760	J	[kgcm²]	0.050
924.800	J	[kgcm²]	0.050
1040.215	J	[kgcm²]	0.033
1172.073	J	[kgcm²]	0.033
1303.560	J	[kgcm²]	0.023
1468.800	J	[kgcm²]	0.023
1717.389	J	[kgcm²]	0.014
1935.086	J	[kgcm²]	0.014

Gearbox			GKS06
103.721	J	[kgcm²]	0.300
113.205	J	[kgcm²]	0.234
127.059	J	[kgcm²]	0.264
140.816	J	[kgcm²]	0.213
155.647	J	[kgcm²]	0.191
174.336	J	[kgcm²]	0.112
202.588	J	[kgcm²]	0.168
224.524	J	[kgcm²]	0.074
252.000	J	[kgcm²]	0.155
279.286	J	[kgcm²]	0.069
316.800	J	[kgcm²]	0.102
361.429	J	[kgcm²]	0.064
408.000	J	[kgcm²]	0.068
458.067	J	[kgcm²]	0.042
517.091	J	[kgcm²]	0.044
555.927	J	[kgcm²]	0.041
640.800	J	[kgcm²]	0.062
696.668	J	[kgcm²]	0.028
812.137	J	[kgcm²]	0.040
914.907	J	[kgcm²]	0.040
1017.741	J	[kgcm²]	0.028
1146.529	J	[kgcm²]	0.028
1340.834	J	[kgcm²]	0.017
1510.507	J	[kgcm²]	0.017

► The moments of inertia relate to the drive shaft of the gearbox.
► The total moment of inertia is calculated by adding the values of the gearbox, motor and accessories.



Moments of inertia

GKS□□-4

► Moment of inertia (J) depending on ratio i

Gearbox			GKS07
103.039	J	[kgcm²]	0.837
112.391	J	[kgcm²]	0.632
126.222	J	[kgcm²]	0.729
137.748	J	[kgcm²]	0.571
154.622	J	[kgcm²]	0.527
179.201	J	[kgcm²]	0.283
201.254	J	[kgcm²]	0.454
222.909	J	[kgcm²]	0.199
246.659	J	[kgcm²]	0.417
273.199	J	[kgcm²]	0.184
321.049	J	[kgcm²]	0.256
358.829	J	[kgcm²]	0.169
399.353	J	[kgcm²]	0.182
464.367	J	[kgcm²]	0.106
516.810	J	[kgcm²]	0.113
563.572	J	[kgcm²]	0.101
636.581	J	[kgcm²]	0.161
683.972	J	[kgcm²]	0.074
823.810	J	[kgcm²]	0.101
928.237	J	[kgcm²]	0.101
999.806	J	[kgcm²]	0.073
1126.542	J	[kgcm²]	0.073
1277.842	J	[kgcm²]	0.047
1439.822	J	[kgcm²]	0.047

Gearbox			GKS09
100.551	J	[kgcm²]	2.480
113.320	J	[kgcm²]	2.456
123.275	J	[kgcm²]	2.107
138.929	J	[kgcm²]	2.091
151.012	J	[kgcm²]	1.516
170.188	J	[kgcm²]	1.505
204.596	J	[kgcm²]	1.244
230.577	J	[kgcm²]	1.239
248.439	J	[kgcm²]	1.128
279.986	J	[kgcm²]	1.125
323.365	J	[kgcm²]	0.713
364.427	J	[kgcm²]	0.710
402.234	J	[kgcm²]	0.509
453.311	J	[kgcm²]	0.507
520.538	J	[kgcm²]	0.466
586.638	J	[kgcm²]	0.465
631.744	J	[kgcm²]	0.443
711.965	J	[kgcm²]	0.443
817.551	J	[kgcm²]	0.276
921.367	J	[kgcm²]	0.276
992.209	J	[kgcm²]	0.201
1118.204	J	[kgcm²]	0.201
1254.197	J	[kgcm²]	0.130
1413.461	J	[kgcm²]	0.130

► The moments of inertia relate to the drive shaft of the gearbox.
► The total moment of inertia is calculated by adding the values of the gearbox, motor and accessories.



Moments of inertia

GKS□□-4

► Moment of inertia (J) depending on ratio i

Gearbox			GKS11
102.119	J	[kgcm²]	7.276
115.063	J	[kgcm²]	7.205
125.095	J	[kgcm²]	6.233
140.952	J	[kgcm²]	6.186
153.242	J	[kgcm²]	4.500
172.667	J	[kgcm²]	4.469
201.890	J	[kgcm²]	3.735
227.481	J	[kgcm²]	3.717
248.106	J	[kgcm²]	3.355
279.556	J	[kgcm²]	3.343
322.931	J	[kgcm²]	2.088
363.866	J	[kgcm²]	2.081
395.787	J	[kgcm²]	1.521
445.958	J	[kgcm²]	1.517
512.196	J	[kgcm²]	1.385
577.122	J	[kgcm²]	1.382
621.619	J	[kgcm²]	1.314
700.416	J	[kgcm²]	1.312
816.455	J	[kgcm²]	0.819
919.949	J	[kgcm²]	0.818
990.879	J	[kgcm²]	0.600
1116.484	J	[kgcm²]	0.599
1252.516	J	[kgcm²]	0.386
1411.286	J	[kgcm²]	0.385

Gearbox			GKS14
97.467	J	[kgcm²]	23.471
109.822	J	[kgcm²]	23.232
119.493	J	[kgcm²]	19.936
134.640	J	[kgcm²]	19.777
158.039	J	[kgcm²]	16.438
178.072	J	[kgcm²]	16.348
193.754	J	[kgcm²]	12.076
218.315	J	[kgcm²]	12.016
237.467	J	[kgcm²]	10.871
267.568	J	[kgcm²]	10.830
321.729	J	[kgcm²]	6.420
362.512	J	[kgcm²]	6.398
390.671	J	[kgcm²]	4.749
440.193	J	[kgcm²]	4.734
513.121	J	[kgcm²]	4.330
578.164	J	[kgcm²]	4.322
622.742	J	[kgcm²]	4.122
701.681	J	[kgcm²]	4.116
805.901	J	[kgcm²]	2.620
908.058	J	[kgcm²]	2.617
978.071	J	[kgcm²]	1.912
1102.052	J	[kgcm²]	1.909
1236.326	J	[kgcm²]	1.259
1393.043	J	[kgcm²]	1.258

► The moments of inertia relate to the drive shaft of the gearbox.
► The total moment of inertia is calculated by adding the values of the gearbox, motor and accessories.



Weights, 4-pole motors

3-stage gearboxes

				m200						
				-P132L4	-P132M4	-P160L4	-P160M4	-P180L4	-P180M4	-P180V4
GKS	GKS06	m	[kg]		95					
	GKS07	m	[kg]	123	121					
	GKS09	m	[kg]	172	170	214	207			
	GKS11	m	[kg]	270	268	312	305	348	339	
	GKS14	m	[kg]	438	436	480	473	516	507	564

4-stage gearboxes

				m200				
				-P132L4	-P132M4	-P160L4	-P160M4	-P180M4
GKS	GKS09	m	[kg]		182			
	GKS11	m	[kg]	292	290			
	GKS14	m	[kg]	478	476	520	513	547

► Weights with oil filling for mounting position A; all values are approximate.
The weights relate to the basic version. Bear in mind that additional weights may be needed, e.g. for motor options.



Additional weights for gearboxes

Product	Mass		
	Solid shaft	Shrink disc	Flange
	m	m	m
	[kg]	[kg]	[kg]
GKS06	2.50	1.00	7.00
GKS07	5.00	1.50	11.0
GKS09	8.00	3.00	16.0
GKS11	16.0	5.00	24.0
GKS14	33.0	11.0	33.0



Selection tables, 4-pole motors

50 Hz: P_N = 5.5 kW

3-stage gearboxes

Mains operation 400 V, 50 Hz			i	Product		
n_2 [r/min]	M_2 [Nm]	c		GKS	m200	
246	203	2.3	5.955	GKS07	-P132M4	50
226	221	1.2	6.485	GKS06	-P132M4	46
178	281	1.9	8.254	GKS07	-P132M4	50
160	312	2.3	9.171	GKS07	-P132M4	50
159	313	1.2	9.196	GKS06	-P132M4	46
145	345	2.3	10.124	GKS07	-P132M4	50
144	346	1.2	10.147	GKS06	-P132M4	46
129	387	1.6	11.378	GKS07	-P132M4	50
129	388	0.9	11.382	GKS06	-P132M4	46
116	429	1.0	12.612	GKS06	-P132M4	46
115	433	1.9	12.711	GKS07	-P132M4	50
99	504	2.1	14.798	GKS07	-P132M4	50
99	505	1.2	14.824	GKS06	-P132M4	46
88	568	1.9	16.674	GKS07	-P132M4	50
88	569	1.1	16.699	GKS06	-P132M4	46
85	588	1.7	17.270	GKS07	-P132M4	50
82	606	0.9	17.809	GKS06	-P132M4	46
72	692	1.0	20.329	GKS06	-P132M4	46
71	698	1.6	20.511	GKS07	-P132M4	50
63	787	1.5	23.111	GKS07	-P132M4	50
58	860	1.4	25.244	GKS07	-P132M4	50
52	963	1.3	28.274	GKS07	-P132M4	50
50	995	2.9	29.228	GKS09	-P132M4	54
46	1085	1.1	31.858	GKS07	-P132M4	50
45	1122	2.7	32.940	GKS09	-P132M4	54
42	1198	2.5	35.193	GKS09	-P132M4	54
41	1228	1.1	36.063	GKS07	-P132M4	50
37	1351	2.2	39.662	GKS09	-P132M4	54
34	1469	2.1	43.146	GKS09	-P132M4	54
33	1504	0.9	44.178	GKS07	-P132M4	50
30	1656	1.8	48.625	GKS09	-P132M4	54
25	1964	3.0	57.683	GKS11	-P132M4	62
25	1991	1.5	58.456	GKS09	-P132M4	54
23	2213	2.7	64.995	GKS11	-P132M4	62
22	2243	1.4	65.879	GKS09	-P132M4	54
21	2414	2.5	70.887	GKS11	-P132M4	62
21	2417	1.3	70.982	GKS09	-P132M4	54



Selection tables, 4-pole motors

50 Hz: P_N = 5.5 kW

3-stage gearboxes

Mains operation 400 V, 50 Hz			i	Product		
n_2 [r/min]	M_2 [Nm]	c		GKS	m200	
18	2720	2.2	79.873	GKS11	-P132M4	62
18	2724	1.1	79.996	GKS09	-P132M4	54
16	3124	1.9	91.737	GKS11	-P132M4	62
14	3520	1.7	103.365	GKS11	-P132M4	62
13	3742	3.2	109.896	GKS14	-P132M4	70
13	3791	1.6	111.335	GKS11	-P132M4	62
12	4217	2.8	123.826	GKS14	-P132M4	70
12	4272	1.4	125.448	GKS11	-P132M4	62
11	4730	2.5	138.913	GKS14	-P132M4	70
9.4	5330	2.2	156.522	GKS14	-P132M4	70
7.9	6353	0.9	186.572	GKS11	-P132M4	62
7.9	6353	1.8	186.572	GKS14	-P132M4	70
7.0	7159	0.8	210.222	GKS11	-P132M4	62
7.0	7159	1.6	210.222	GKS14	-P132M4	70
6.5	7711	1.5	226.431	GKS14	-P132M4	70
5.7	8688	1.3	255.133	GKS14	-P132M4	70
5.1	9747	1.2	286.219	GKS14	-P132M4	70
4.5	10982	1.1	322.500	GKS14	-P132M4	70

4-stage gearboxes

Mains operation 400 V, 50 Hz			i	Product		
n_2 [r/min]	M_2 [Nm]	c		GKS	m200	
15	3263	3.1	97.467	GKS14	-P132M4	74
15	3366	0.9	100.551	GKS09	-P132M4	58
14	3418	1.7	102.119	GKS11	-P132M4	66
13	3676	3.0	109.822	GKS14	-P132M4	74
13	3852	1.5	115.063	GKS11	-P132M4	66
12	4000	2.7	119.493	GKS14	-P132M4	74
12	4187	1.4	125.095	GKS11	-P132M4	66
11	4507	2.5	134.640	GKS14	-P132M4	74
10	4718	1.3	140.952	GKS11	-P132M4	66
9.6	5130	1.1	153.242	GKS11	-P132M4	66
9.3	5290	2.2	158.039	GKS14	-P132M4	74
8.5	5780	1.0	172.667	GKS11	-P132M4	66
8.2	5961	1.9	178.072	GKS14	-P132M4	74
7.6	6486	1.8	193.754	GKS14	-P132M4	74
7.3	6758	0.9	201.890	GKS11	-P132M4	66
6.7	7308	1.6	218.315	GKS14	-P132M4	74
6.2	7949	1.4	237.467	GKS14	-P132M4	74
5.5	8957	1.3	267.568	GKS14	-P132M4	74
4.6	10770	1.1	321.729	GKS14	-P132M4	74



Selection tables, 4-pole motors

50 Hz: P_N = 5.5 kW

4-stage gearboxes

Mains operation 400 V, 50 Hz			i	Product		
n_2 [r/min]	M_2 [Nm]	c		GKS	m200	
4.0	12135	1.0	362.512	GKS14	-P132M4	74
3.7	13077	0.9	390.671	GKS14	-P132M4	74



Selection tables, 4-pole motors

50 Hz: P_N = 7.5 kW

3-stage gearboxes

Mains operation 400 V, 50 Hz			i	Product		
n_2 [r/min]	M_2 [Nm]	c		GKS	m200	
245	277	1.7	5.955	GKS07	-P132L4	50
177	385	1.4	8.254	GKS07	-P132L4	50
159	427	1.7	9.171	GKS07	-P132L4	50
144	472	1.7	10.124	GKS07	-P132L4	50
128	530	1.2	11.378	GKS07	-P132L4	50
119	572	2.8	12.283	GKS09	-P132L4	54
115	592	1.4	12.711	GKS07	-P132L4	50
109	622	2.8	13.360	GKS09	-P132L4	54
99	690	1.5	14.798	GKS07	-P132L4	50
91	751	2.4	16.122	GKS09	-P132L4	54
85	805	1.2	17.270	GKS07	-P132L4	50
83	817	2.4	17.536	GKS09	-P132L4	54
75	911	2.8	19.541	GKS09	-P132L4	54
71	956	1.2	20.511	GKS07	-P132L4	50
66	1026	2.6	22.022	GKS09	-P132L4	54
63	1077	1.1	23.111	GKS07	-P132L4	50
58	1176	1.0	25.244	GKS07	-P132L4	50
57	1195	2.4	25.649	GKS09	-P132L4	54
52	1317	0.9	28.274	GKS07	-P132L4	50
50	1362	2.1	29.228	GKS09	-P132L4	54
44	1535	1.9	32.940	GKS09	-P132L4	54
42	1640	1.9	35.193	GKS09	-P132L4	54
37	1848	1.6	39.662	GKS09	-P132L4	54
36	1876	3.1	40.272	GKS11	-P132L4	62
34	2010	1.5	43.146	GKS09	-P132L4	54
33	2040	2.8	43.783	GKS11	-P132L4	62
30	2266	1.3	48.625	GKS09	-P132L4	54
30	2299	2.6	49.333	GKS11	-P132L4	62
25	2688	2.2	57.683	GKS11	-P132L4	62
25	2724	1.1	58.456	GKS09	-P132L4	54
23	3028	2.0	64.995	GKS11	-P132L4	62
22	3070	1.0	65.879	GKS09	-P132L4	54
21	3303	1.8	70.887	GKS11	-P132L4	62
21	3307	0.9	70.982	GKS09	-P132L4	54
19	3620	3.2	77.681	GKS14	-P132L4	70
18	3722	1.6	79.873	GKS11	-P132L4	62
18	3727	0.8	79.996	GKS09	-P132L4	54



Selection tables, 4-pole motors

50 Hz: P_N = 7.5 kW

3-stage gearboxes

Mains operation 400 V, 50 Hz			i	Product		
n_2 [r/min]	M_2 [Nm]	c		GKS	m200	
16	4219	2.7	90.551	GKS14	-P132L4	70
16	4274	1.4	91.737	GKS11	-P132L4	62
14	4754	2.5	102.029	GKS14	-P132L4	70
14	4816	1.3	103.365	GKS11	-P132L4	62
13	5121	2.3	109.896	GKS14	-P132L4	70
12	5770	2.0	123.826	GKS14	-P132L4	70
7.8	8693	1.3	186.572	GKS14	-P132L4	70
6.9	9795	1.2	210.222	GKS14	-P132L4	70
6.4	10551	1.1	226.431	GKS14	-P132L4	70
5.7	11888	1.0	255.133	GKS14	-P132L4	70

4-stage gearboxes

Mains operation 400 V, 50 Hz			i	Product		
n_2 [r/min]	M_2 [Nm]	c		GKS	m200	
15	4464	2.2	97.467	GKS14	-P132L4	74
14	4677	1.2	102.119	GKS11	-P132L4	66
13	5030	2.2	109.822	GKS14	-P132L4	74
13	5270	1.1	115.063	GKS11	-P132L4	66
12	5473	2.0	119.493	GKS14	-P132L4	74
12	5730	1.0	125.095	GKS11	-P132L4	66
11	6167	1.8	134.640	GKS14	-P132L4	74
10	6456	0.9	140.952	GKS11	-P132L4	66
9.5	7019	0.8	153.242	GKS11	-P132L4	66
9.2	7239	1.6	158.039	GKS14	-P132L4	74
8.2	8156	1.4	178.072	GKS14	-P132L4	74
7.5	8875	1.3	193.754	GKS14	-P132L4	74
6.7	9999	1.2	218.315	GKS14	-P132L4	74
6.1	10877	1.1	237.467	GKS14	-P132L4	74
5.5	12255	0.9	267.568	GKS14	-P132L4	74



Selection tables, 4-pole motors

50 Hz: P_N = 11.0 kW

3-stage gearboxes

Mains operation 400 V, 50 Hz			i	Product		
n_2 [r/min]	M_2 [Nm]	c		GKS	m200	
120	834	1.9	12.283	GKS09	-P160M4	54
110	907	1.9	13.360	GKS09	-P160M4	54
93	1077	2.9	15.874	GKS11	-P160M4	62
91	1094	1.7	16.122	GKS09	-P160M4	54
85	1172	2.9	17.265	GKS11	-P160M4	62
84	1190	1.7	17.536	GKS09	-P160M4	54
75	1326	1.9	19.541	GKS09	-P160M4	54
67	1495	1.8	22.022	GKS09	-P160M4	54
57	1739	2.9	25.615	GKS11	-P160M4	62
57	1741	1.6	25.649	GKS09	-P160M4	54
53	1902	2.7	28.021	GKS11	-P160M4	62
50	1984	1.5	29.228	GKS09	-P160M4	54
47	2143	2.6	31.573	GKS11	-P160M4	62
45	2236	1.3	32.940	GKS09	-P160M4	54
42	2389	1.3	35.193	GKS09	-P160M4	54
41	2426	2.3	35.741	GKS11	-P160M4	62
37	2692	1.1	39.662	GKS09	-P160M4	54
37	2733	2.2	40.272	GKS11	-P160M4	62
34	2929	1.0	43.146	GKS09	-P160M4	54
34	2972	2.0	43.783	GKS11	-P160M4	62
30	3300	0.9	48.625	GKS09	-P160M4	54
30	3348	1.8	49.333	GKS11	-P160M4	62
26	3818	3.0	56.251	GKS14	-P160M4	70
26	3915	1.5	57.683	GKS11	-P160M4	62
23	4302	2.7	63.382	GKS14	-P160M4	70
23	4411	1.4	64.995	GKS11	-P160M4	62
21	4679	2.5	68.942	GKS14	-P160M4	70
21	4811	1.2	70.887	GKS11	-P160M4	62
19	5273	2.2	77.681	GKS14	-P160M4	70
18	5421	1.1	79.873	GKS11	-P160M4	62
16	6146	1.9	90.551	GKS14	-P160M4	70
14	6925	1.7	102.029	GKS14	-P160M4	70
13	7459	1.6	109.896	GKS14	-P160M4	70
12	8405	1.4	123.826	GKS14	-P160M4	70
7.9	12664	0.9	186.572	GKS14	-P160M4	70
7.0	14269	0.8	210.222	GKS14	-P160M4	70



Selection tables, 4-pole motors

50 Hz: P_N = 11.0 kW

4-stage gearboxes

Mains operation 400 V, 50 Hz			i	Product		
n_2 [r/min]	M_2 [Nm]	c		GKS	m200	
15	6503	1.5	97.467	GKS14	-P160M4	74
13	7327	1.5	109.822	GKS14	-P160M4	74
12	7973	1.4	119.493	GKS14	-P160M4	74
11	8983	1.3	134.640	GKS14	-P160M4	74
9.3	10544	1.1	158.039	GKS14	-P160M4	74
8.3	11881	1.0	178.072	GKS14	-P160M4	74
7.6	12927	0.9	193.754	GKS14	-P160M4	74



Selection tables, 4-pole motors

50 Hz: P_N = 15.0 kW

3-stage gearboxes

Mains operation 400 V, 50 Hz			i	Product		
n_2 [r/min]	M_2 [Nm]	c		GKS	m200	
93	1469	2.1	15.874	GKS11	-P160L4	62
85	1598	2.1	17.265	GKS11	-P160L4	62
57	2371	2.1	25.615	GKS11	-P160L4	62
53	2594	2.0	28.021	GKS11	-P160L4	62
47	2922	1.9	31.573	GKS11	-P160L4	62
42	3211	3.1	34.692	GKS14	-P160L4	70
42	3257	0.9	35.193	GKS09	-P160L4	54
41	3308	1.7	35.741	GKS11	-P160L4	62
38	3618	3.0	39.089	GKS14	-P160L4	70
37	3727	1.6	40.272	GKS11	-P160L4	62
35	3937	2.7	42.531	GKS14	-P160L4	70
34	4052	1.4	43.783	GKS11	-P160L4	62
31	4436	2.5	47.923	GKS14	-P160L4	70
30	4566	1.3	49.333	GKS11	-P160L4	62
26	5206	2.2	56.251	GKS14	-P160L4	70
26	5339	1.1	57.683	GKS11	-P160L4	62
23	5866	2.0	63.382	GKS14	-P160L4	70
23	6016	1.0	64.995	GKS11	-P160L4	62
21	6381	1.8	68.942	GKS14	-P160L4	70
21	6561	0.9	70.887	GKS11	-P160L4	62
19	7190	1.6	77.681	GKS14	-P160L4	70
18	7393	0.8	79.873	GKS11	-P160L4	62
16	8381	1.4	90.551	GKS14	-P160L4	70
14	9443	1.2	102.029	GKS14	-P160L4	70
13	10172	1.2	109.896	GKS14	-P160L4	70
12	11461	1.0	123.826	GKS14	-P160L4	70

4-stage gearboxes

Mains operation 400 V, 50 Hz			i	Product		
n_2 [r/min]	M_2 [Nm]	c		GKS	m200	
15	8868	1.1	97.467	GKS14	-P160L4	74
13	9992	1.1	109.822	GKS14	-P160L4	74
12	10872	1.0	119.493	GKS14	-P160L4	74
11	12250	0.9	134.640	GKS14	-P160L4	74
9.3	14379	0.8	158.039	GKS14	-P160L4	74



Selection tables, 4-pole motors

50 Hz: P_N = 18.5 kW

3-stage gearboxes

Mains operation 400 V, 50 Hz			i	Product		
n_2 [r/min]	M_2 [Nm]	c		GKS	m200	
88	1913	3.1	16.646	GKS14	-P180M4	70
80	2105	2.9	18.311	GKS14	-P180M4	70
59	2838	3.1	24.696	GKS14	-P180M4	70
54	3122	2.9	27.165	GKS14	-P180M4	70
48	3518	2.9	30.609	GKS14	-P180M4	70
42	3987	2.5	34.692	GKS14	-P180M4	70
41	4108	1.4	35.741	GKS11	-P180M4	62
37	4493	2.4	39.089	GKS14	-P180M4	70
36	4629	1.3	40.272	GKS11	-P180M4	62
34	4888	2.2	42.531	GKS14	-P180M4	70
33	5032	1.2	43.783	GKS11	-P180M4	62
31	5508	2.0	47.923	GKS14	-P180M4	70
30	5670	1.0	49.333	GKS11	-P180M4	62
26	6465	1.8	56.251	GKS14	-P180M4	70
25	6630	0.9	57.683	GKS11	-P180M4	62
23	7285	1.6	63.382	GKS14	-P180M4	70
23	7470	0.8	64.995	GKS11	-P180M4	62
21	7924	1.5	68.942	GKS14	-P180M4	70
19	8928	1.3	77.681	GKS14	-P180M4	70
16	10407	1.1	90.551	GKS14	-P180M4	70
14	11727	1.0	102.029	GKS14	-P180M4	70

4-stage gearboxes

Mains operation 400 V, 50 Hz			i	Product		
n_2 [r/min]	M_2 [Nm]	c		GKS	m200	
15	11012	0.9	97.467	GKS14	-P180M4	74
13	12408	0.9	109.822	GKS14	-P180M4	74



Selection tables, 4-pole motors

50 Hz: P_N = 22.0 kW

3-stage gearboxes

Mains operation 400 V, 50 Hz			i	Product		
n_2 [r/min]	M_2 [Nm]	c		GKS	m200	
42	4725	2.1	34.692	GKS14	-P180L4	70
38	5324	2.1	39.089	GKS14	-P180L4	70
34	5793	1.9	42.531	GKS14	-P180L4	70
34	5964	1.0	43.783	GKS11	-P180L4	62
31	6528	1.7	47.923	GKS14	-P180L4	70
26	7662	1.5	56.251	GKS14	-P180L4	70
23	8633	1.3	63.382	GKS14	-P180L4	70
21	9391	1.2	68.942	GKS14	-P180L4	70
19	10581	1.1	77.681	GKS14	-P180L4	70
16	12334	0.9	90.551	GKS14	-P180L4	70
14	13898	0.8	102.029	GKS14	-P180L4	70



Selection tables, 4-pole motors

50 Hz: P_N = 30.0 kW

3-stage gearboxes

Mains operation 400 V, 50 Hz			i	Product		
n_2 [r/min]	M_2 [Nm]	c		GKS	m200	
26	10378	1.1	56.251	GKS14	-P180V4	70



Dimensions, 4-pole motors

GKS06, 3-stage gearboxes

Dimensions with hollow shaft and foot (HBR)
Dimensions with hollow shaft and foot, centering (HAR)

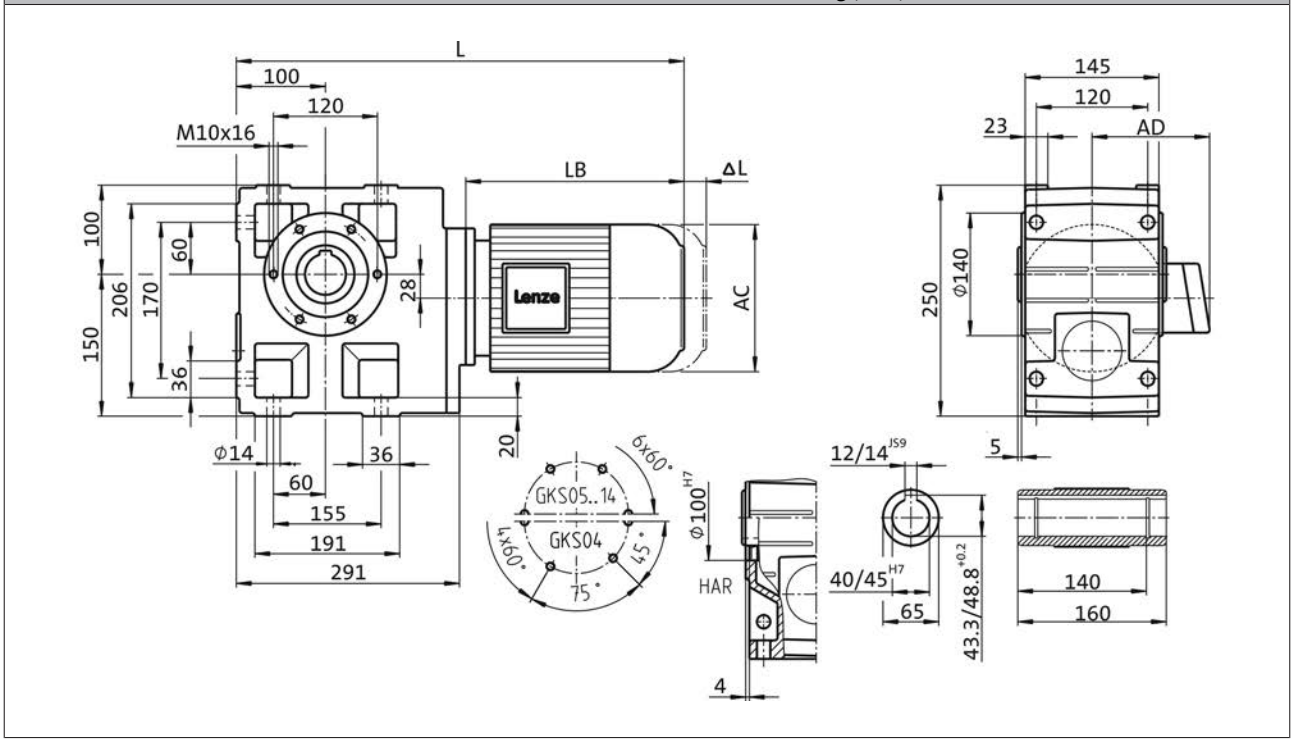

Product			m200
			-P132M4
Dimensions			
Total length	**L**	**[mm]**	717
Motor length	**LB**	**[mm]**	400
Length of motor options	**Δ L**	**[mm]**	118
Motor diameter	**AC**	**[mm]**	281
Distance motor/connection	**AD**	**[mm]**	182



Dimensions, 4-pole motors

GKS06, 3-stage gearboxes

Dimensions with hollow shaft and foot, flange (HAK)

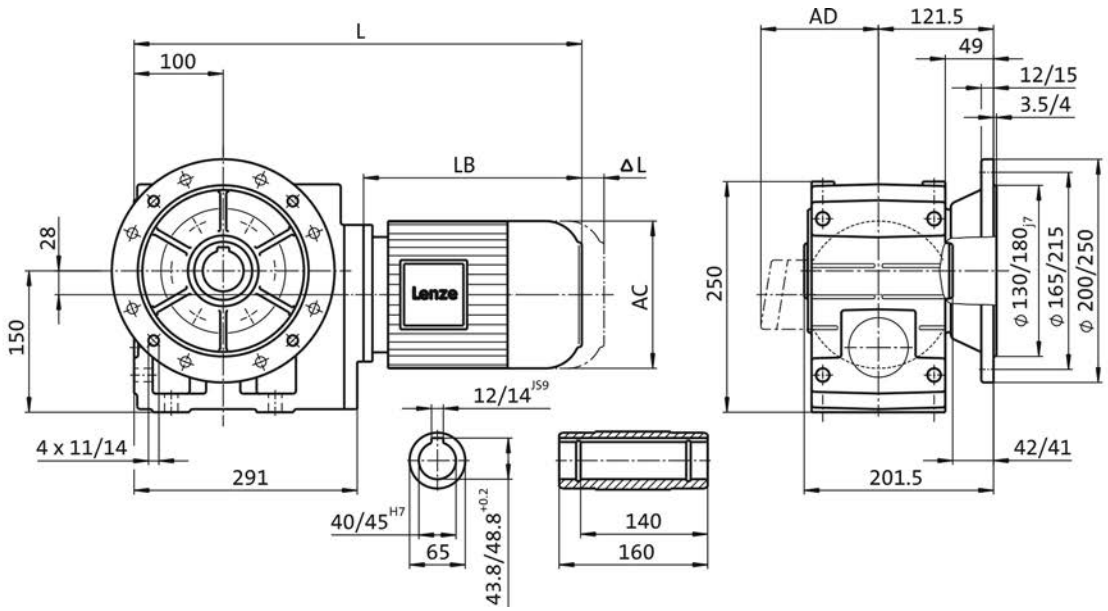

Product			m200
			-P132M4
Dimensions			
Total length	**L**	**[mm]**	717
Motor length	**LB**	**[mm]**	400
Length of motor options	**Δ L**	**[mm]**	118
Motor diameter	**AC**	**[mm]**	281
Distance motor/connection	**AD**	**[mm]**	182

Dimensions, 4-pole motors

GKS06, 3-stage gearboxes

Dimensions with solid shaft and foot (VBR)
Dimensions with solid shaft and foot, centering (VAR)

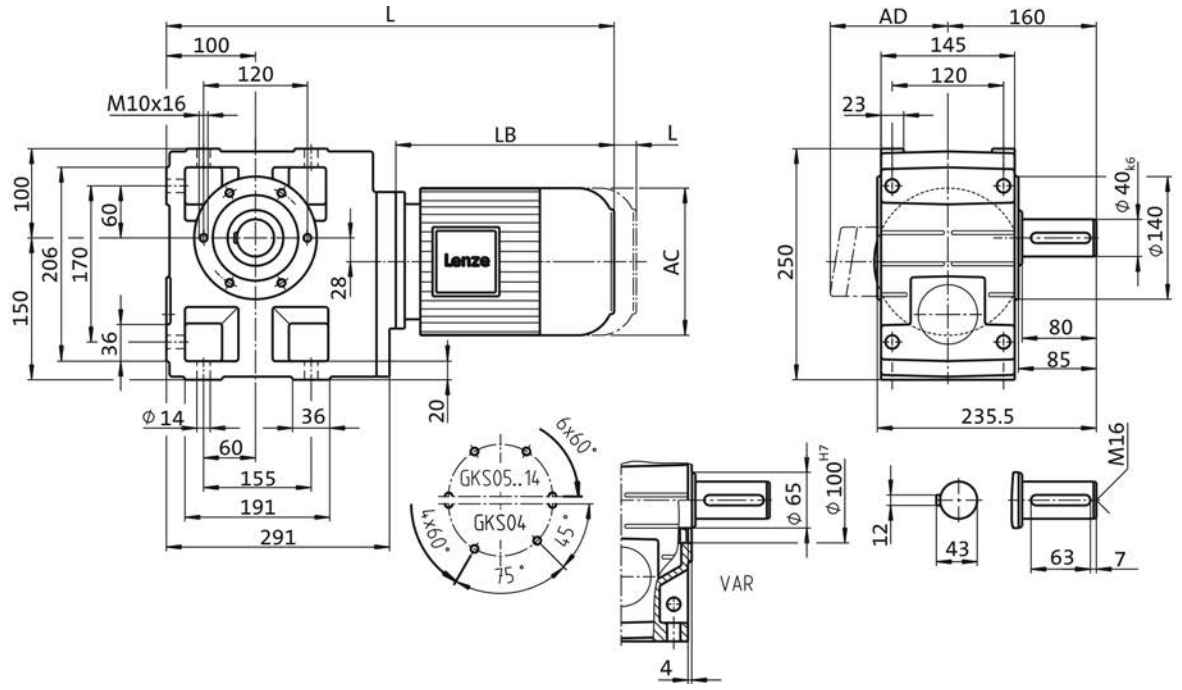

Product			m200
			-P132M4
Dimensions			
Total length	**L**	**[mm]**	717
Motor length	**LB**	**[mm]**	400
Length of motor options	**Δ L**	**[mm]**	118
Motor diameter	**AC**	**[mm]**	281
Distance motor/connection	**AD**	**[mm]**	182



Dimensions, 4-pole motors

GKS06, 3-stage gearboxes

Dimensions with solid shaft and foot, flange (VAK)

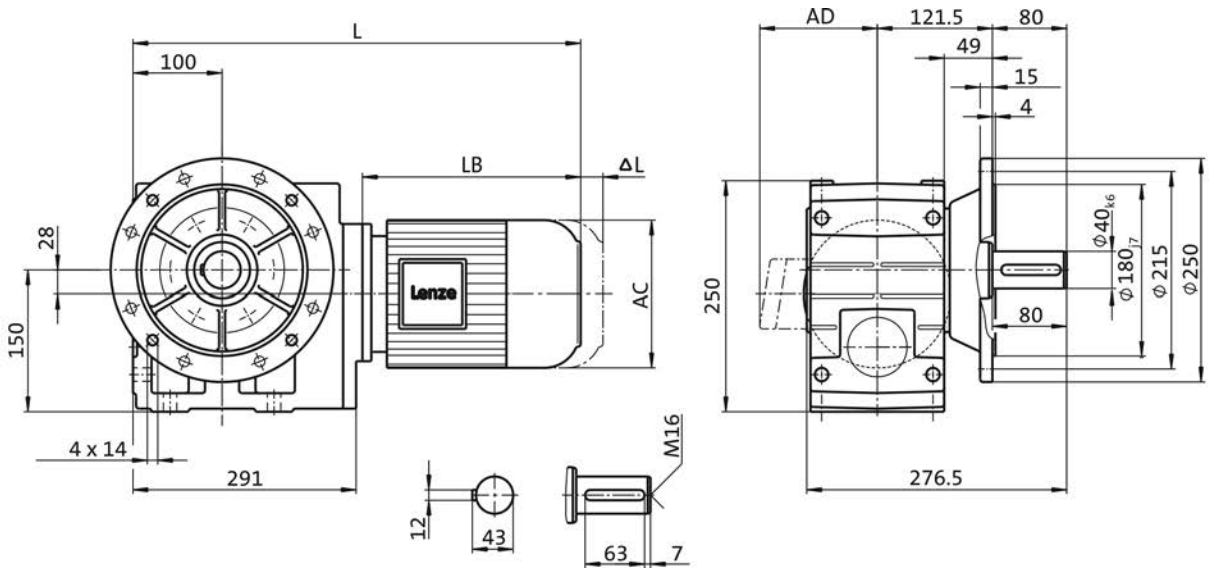

Product			m200
			-P132M4
Dimensions			
Total length	**L**	**[mm]**	717
Motor length	**LB**	**[mm]**	400
Length of motor options	**Δ L**	**[mm]**	118
Motor diameter	**AC**	**[mm]**	281
Distance motor/connection	**AD**	**[mm]**	182



Dimensions, 4-pole motors

GKS07, 3-stage gearboxes

Dimensions with hollow shaft and foot (HBR)
Dimensions with hollow shaft and foot, centering (HAR)

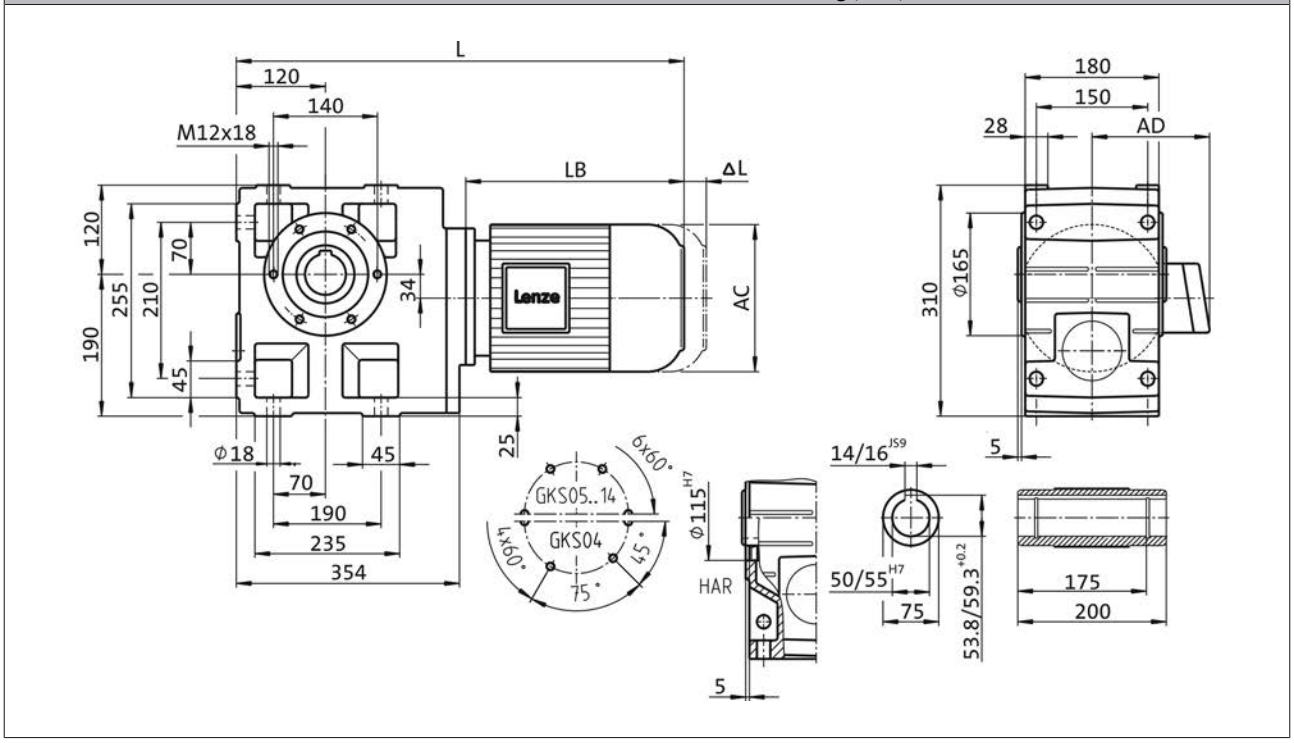

Product			m200	
			-P132L4	-P132M4
Dimensions				
Total length	**L**	**[mm]**	773	
Motor length	**LB**	**[mm]**	400	
Length of motor options	**Δ L**	**[mm]**	118	
Motor diameter	**AC**	**[mm]**	281	
Distance motor/connection	**AD**	**[mm]**	182	



Dimensions, 4-pole motors

GKS07, 3-stage gearboxes

Dimensions with hollow shaft and foot, flange (HAK)

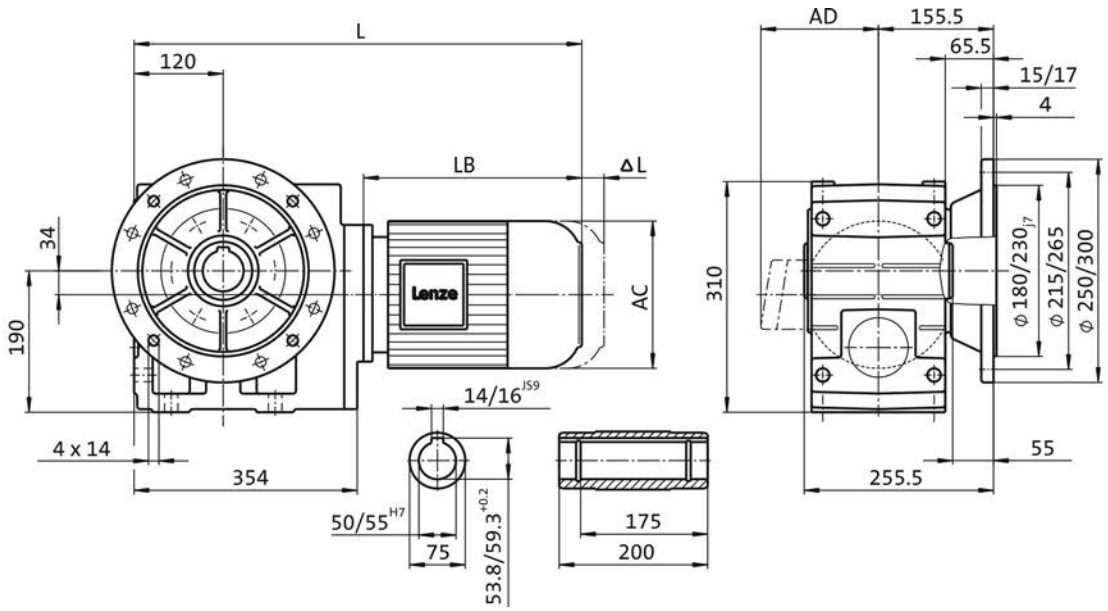

Product			m200	
			-P132L4	-P132M4
Dimensions				
Total length	**L**	**[mm]**	773	
Motor length	**LB**	**[mm]**	400	
Length of motor options	**Δ L**	**[mm]**	118	
Motor diameter	**AC**	**[mm]**	281	
Distance motor/connection	**AD**	**[mm]**	182	

Dimensions, 4-pole motors

GKS07, 3-stage gearboxes

Dimensions with solid shaft and foot (VBR)
Dimensions with solid shaft and foot, centering (VAR)

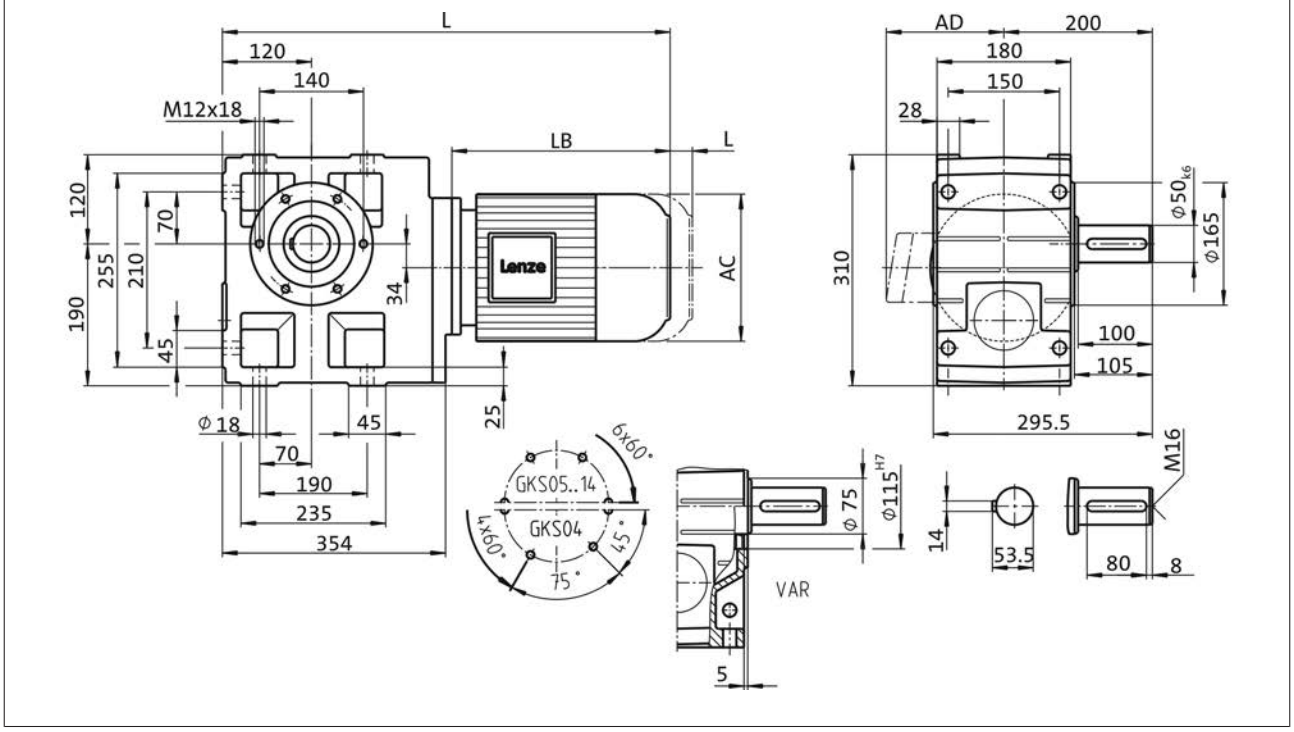

Product			m200	
			-P132L4	-P132M4
Dimensions				
Total length	**L**	**[mm]**	773	
Motor length	**LB**	**[mm]**	400	
Length of motor options	**Δ L**	**[mm]**	118	
Motor diameter	**AC**	**[mm]**	281	
Distance motor/connection	**AD**	**[mm]**	182	



Dimensions, 4-pole motors

GKS07, 3-stage gearboxes

Dimensions with solid shaft and foot, flange (VAK)

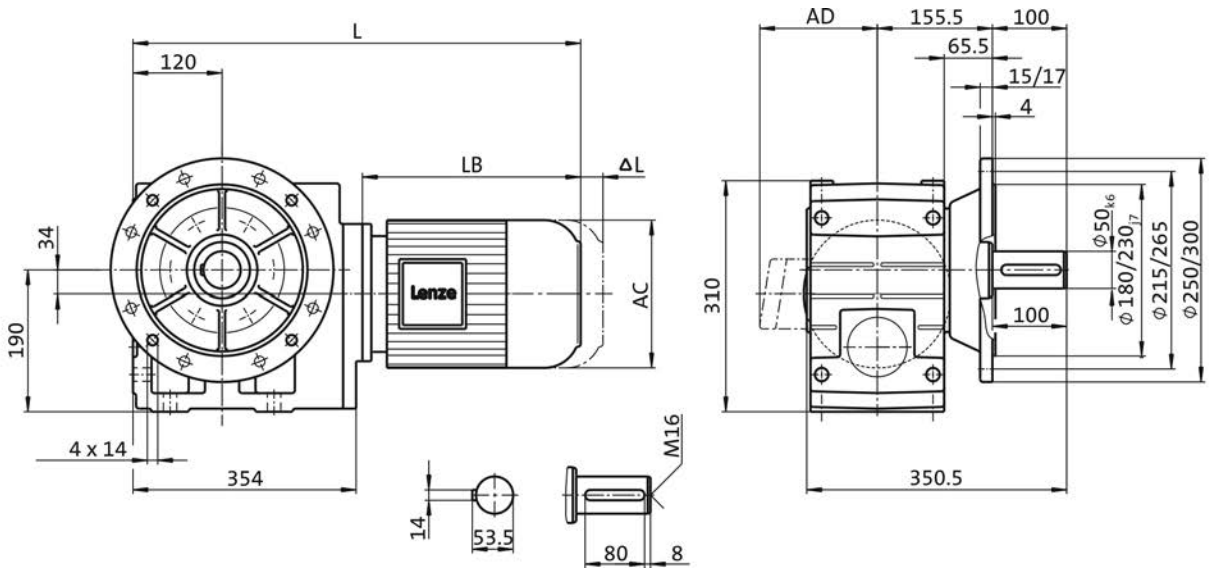

Product			m200	
			-P132L4	-P132M4
Dimensions				
Total length	**L**	**[mm]**	773	
Motor length	**LB**	**[mm]**	400	
Length of motor options	**Δ L**	**[mm]**	118	
Motor diameter	**AC**	**[mm]**	281	
Distance motor/connection	**AD**	**[mm]**	182	



Dimensions, 4-pole motors

GKS09, 3-stage gearboxes

Dimensions with hollow shaft and foot (HBR)
Dimensions with hollow shaft and foot, centering (HAR)

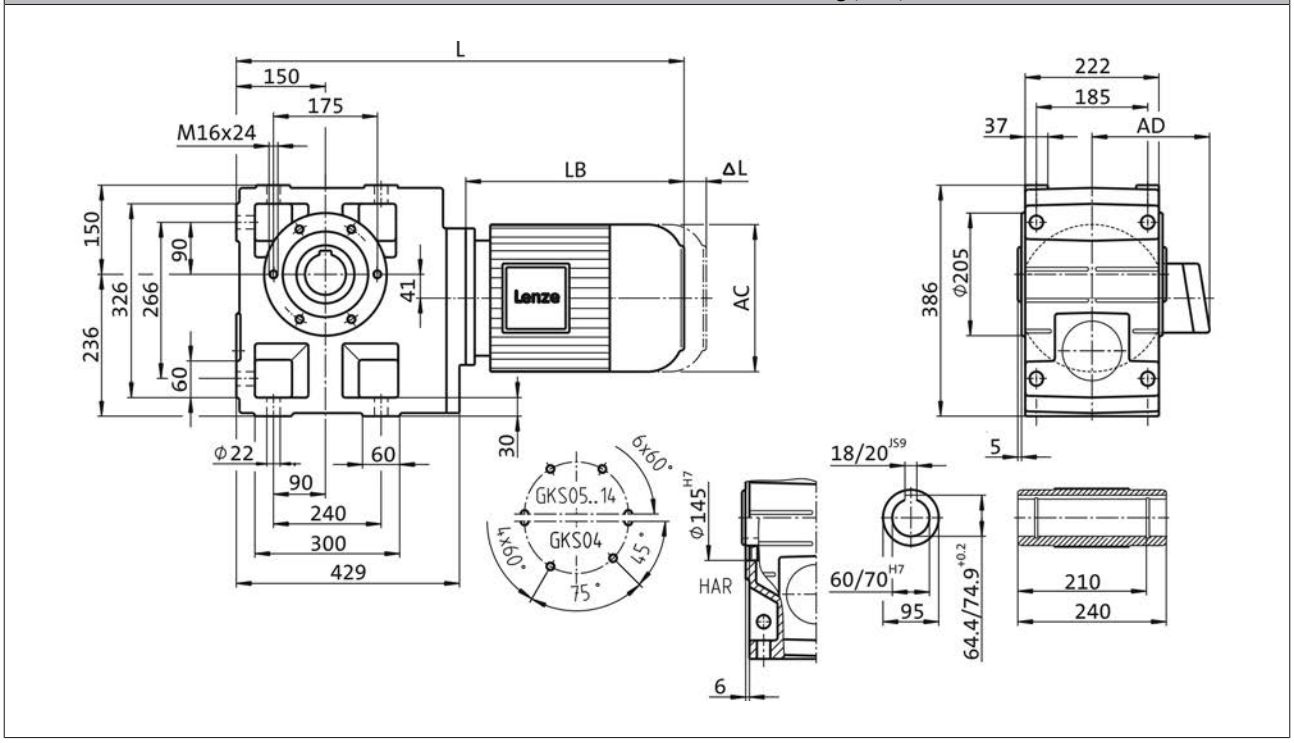

Product			m200			
			-P132L4	-P132M4	-P160L4	-P160M4
Dimensions						
Total length	**L**	**[mm]**	844		950	
Motor length	**LB**	**[mm]**	400		501	
Length of motor options	**Δ L**	**[mm]**	118		144	
Motor diameter	**AC**	**[mm]**	281		302	
Distance motor/connection	**AD**	**[mm]**	182		231	



Dimensions, 4-pole motors

GKS09, 3-stage gearboxes

Dimensions with hollow shaft and foot, flange (HAK)

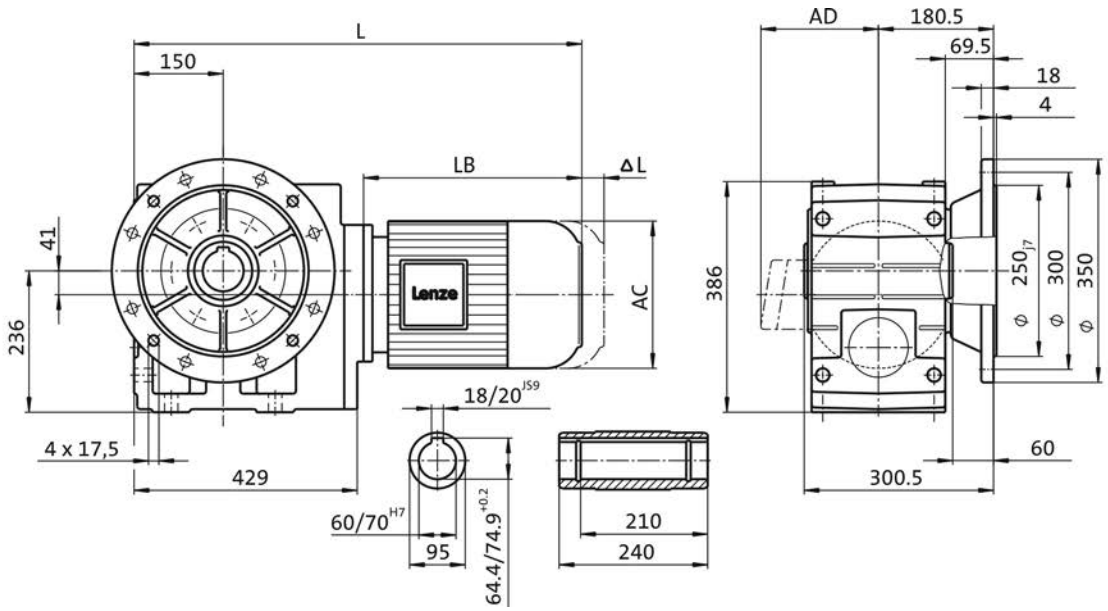

Product			m200			
			-P132L4	-P132M4	-P160L4	-P160M4
Dimensions						
Total length	**L**	**[mm]**	844		950	
Motor length	**LB**	**[mm]**	400		501	
Length of motor options	**Δ L**	**[mm]**	118		144	
Motor diameter	**AC**	**[mm]**	281		302	
Distance motor/connection	**AD**	**[mm]**	182		231	

Dimensions, 4-pole motors

GKS09, 3-stage gearboxes

Dimensions with solid shaft and foot (VBR)
Dimensions with solid shaft and foot, centering (VAR)

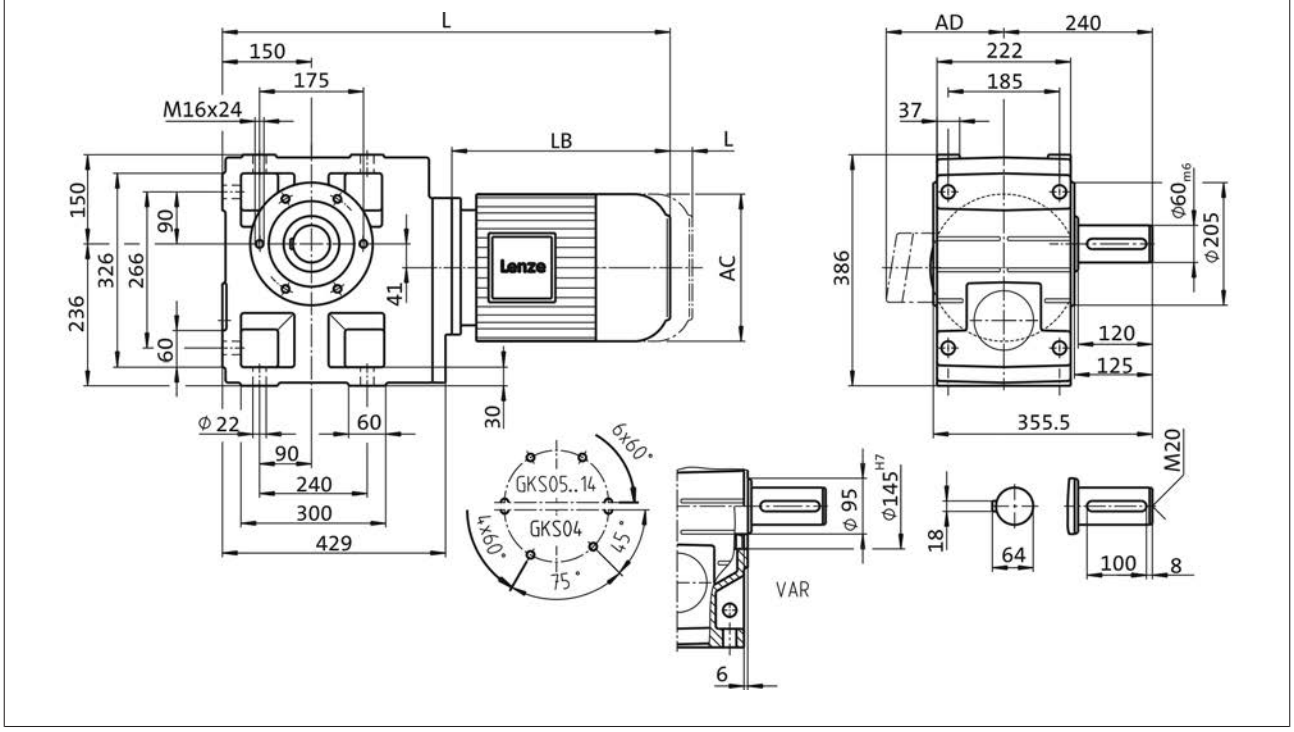

Product			m200			
			-P132L4	-P132M4	-P160L4	-P160M4
Dimensions						
Total length	**L**	**[mm]**	844		950	
Motor length	**LB**	**[mm]**	400		501	
Length of motor options	**Δ L**	**[mm]**	118		144	
Motor diameter	**AC**	**[mm]**	281		302	
Distance motor/connection	**AD**	**[mm]**	182		231	



Dimensions, 4-pole motors

GKS09, 3-stage gearboxes

Dimensions with solid shaft and foot, flange (VAK)

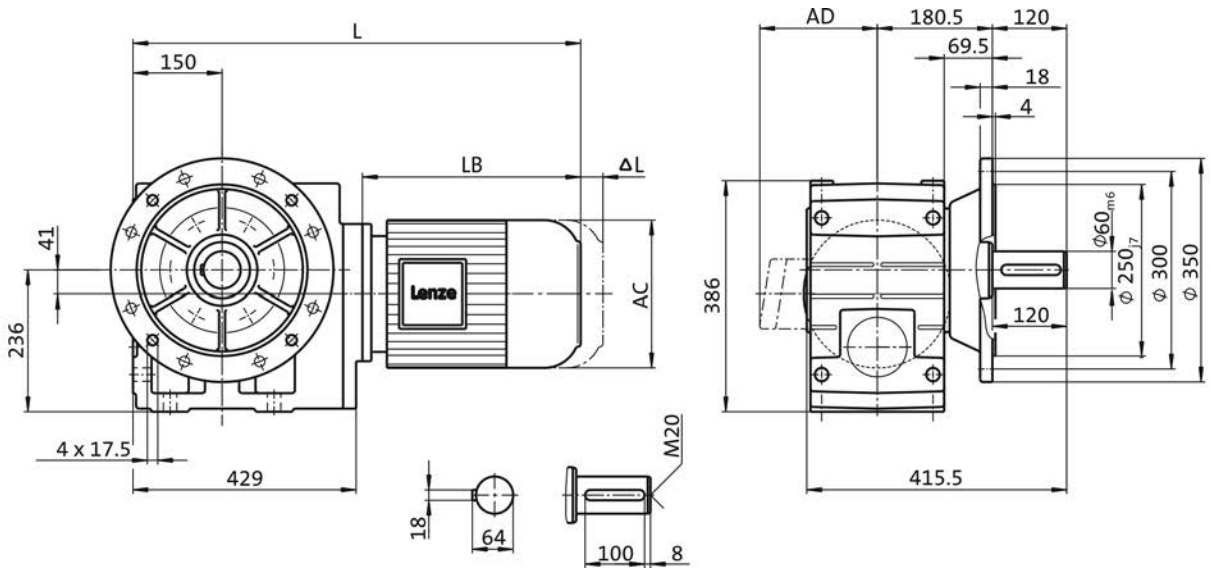

Product			m200			
			-P132L4	-P132M4	-P160L4	-P160M4
Dimensions						
Total length	**L**	**[mm]**	844		950	
Motor length	**LB**	**[mm]**	400		501	
Length of motor options	**Δ L**	**[mm]**	118		144	
Motor diameter	**AC**	**[mm]**	281		302	
Distance motor/connection	**AD**	**[mm]**	182		231	



Dimensions, 4-pole motors

GKS09, 4-stage gearboxes

Dimensions with hollow shaft and foot (HBR)
Dimensions with hollow shaft and foot, centering (HAR)

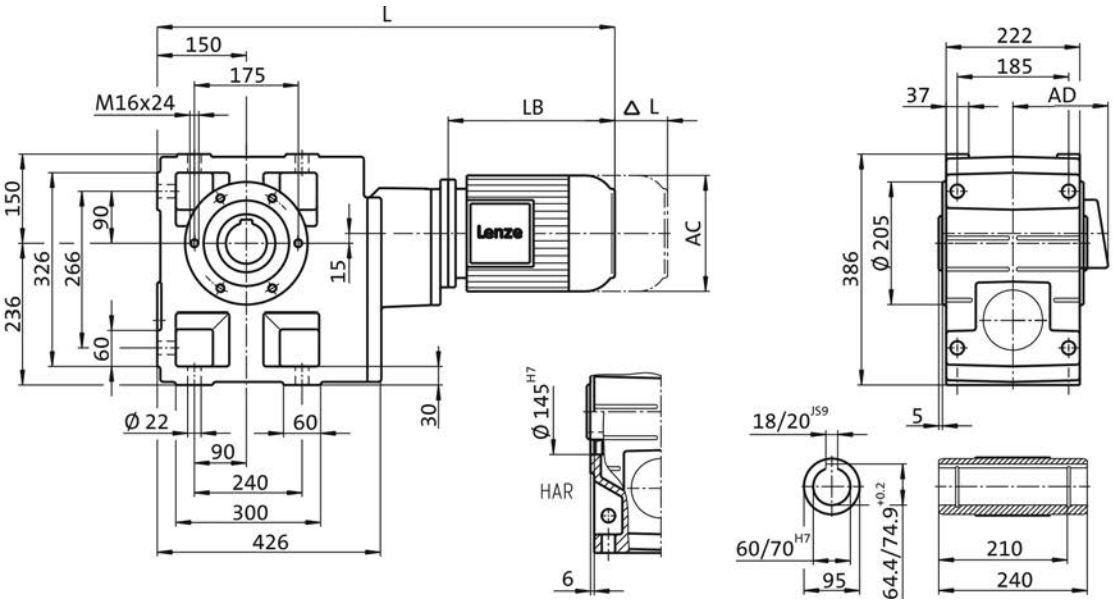

Product			m200
			-P132M4
Dimensions			
Total length	**L**	**[mm]**	966
Motor length	**LB**	**[mm]**	400
Length of motor options	**Δ L**	**[mm]**	118
Motor diameter	**AC**	**[mm]**	281
Distance motor/connection	**AD**	**[mm]**	182



Dimensions, 4-pole motors

GKS09, 4-stage gearboxes

Dimensions with hollow shaft and foot, flange (HAK)

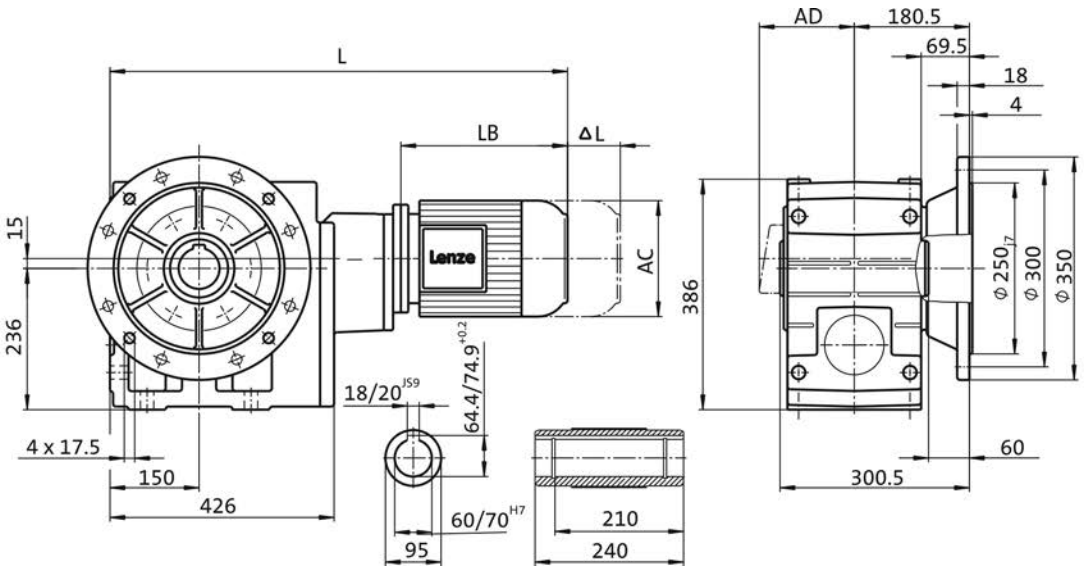

Product			m200
			-P132M4
Dimensions			
Total length	**L**	**[mm]**	966
Motor length	**LB**	**[mm]**	400
Length of motor options	**Δ L**	**[mm]**	118
Motor diameter	**AC**	**[mm]**	281
Distance motor/connection	**AD**	**[mm]**	182



Dimensions, 4-pole motors

GKS09, 4-stage gearboxes

Dimensions with solid shaft and foot (VBR)
Dimensions with solid shaft and foot, centering (VAR)

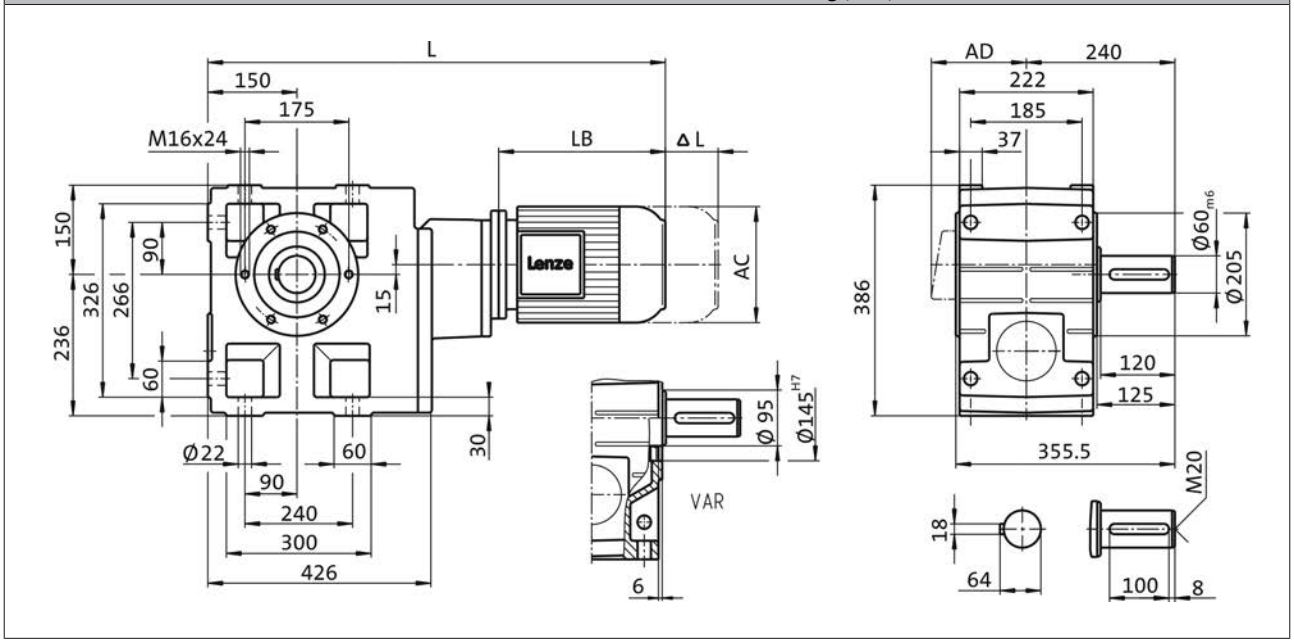

Product			m200
			-P132M4
Dimensions			
Total length	**L**	**[mm]**	966
Motor length	**LB**	**[mm]**	400
Length of motor options	**Δ L**	**[mm]**	118
Motor diameter	**AC**	**[mm]**	281
Distance motor/connection	**AD**	**[mm]**	182



Dimensions, 4-pole motors

GKS09, 4-stage gearboxes

Dimensions with solid shaft and foot, flange (VAK)

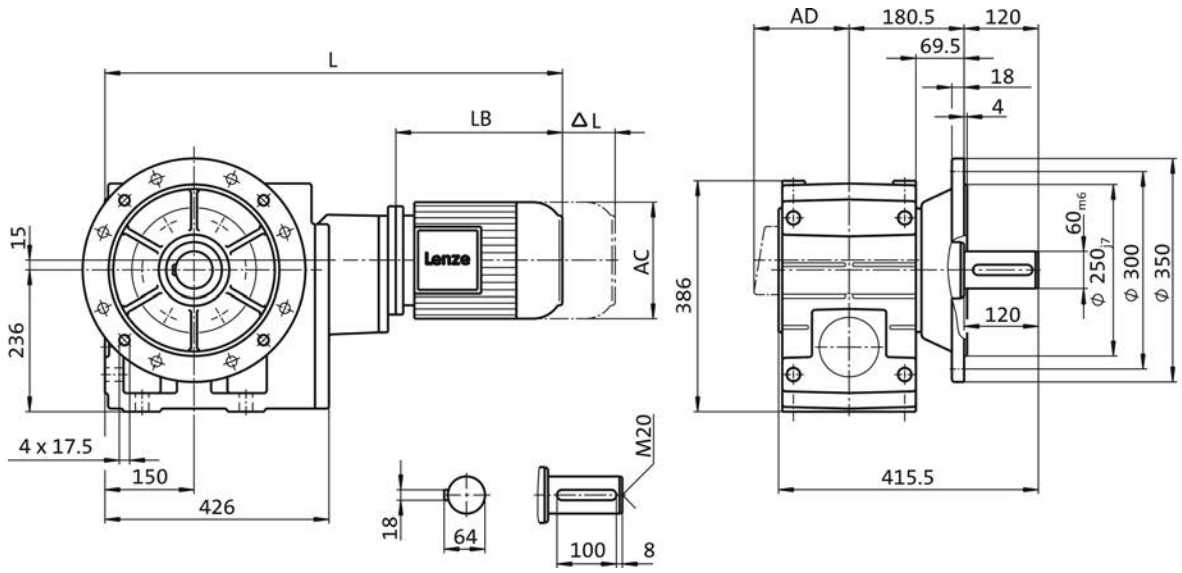

Product			m200
			-P132M4
Dimensions			
Total length	**L**	**[mm]**	966
Motor length	**LB**	**[mm]**	400
Length of motor options	**Δ L**	**[mm]**	118
Motor diameter	**AC**	**[mm]**	281
Distance motor/connection	**AD**	**[mm]**	182



Dimensions, 4-pole motors

GKS11, 3-stage gearboxes

Dimensions with hollow shaft and foot (HBR)
Dimensions with hollow shaft and foot, centering (HAR)

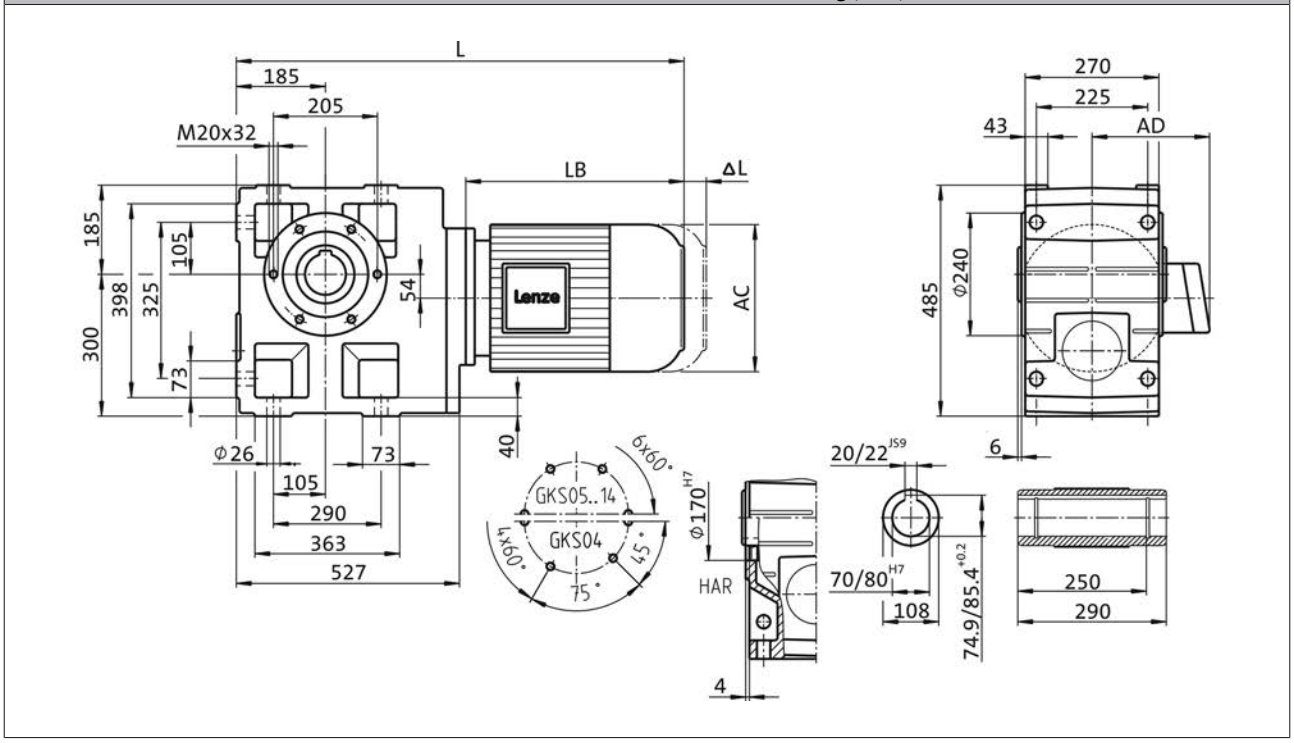

Product			m200					
			-P132L4	-P132M4	-P160L4	-P160M4	-P180L4	-P180M4
Dimensions								
Total length	**L**	**[mm]**	935		1041		1135	
Motor length	**LB**	**[mm]**	400		501		595	
Length of motor options	**Δ L**	**[mm]**	118		144		108	
Motor diameter	**AC**	**[mm]**	281		302		281	
Distance motor/connection	**AD**	**[mm]**	182		231		282	



Dimensions, 4-pole motors

GKS11, 3-stage gearboxes

Dimensions with hollow shaft and foot, flange (HAK)

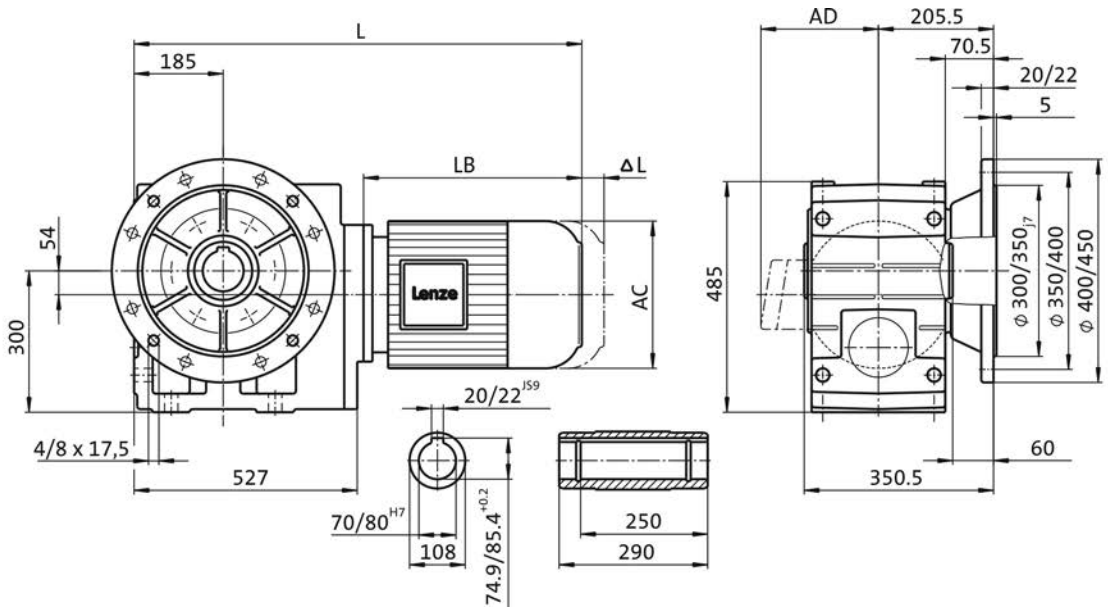

Product			m200					
			-P132L4	-P132M4	-P160L4	-P160M4	-P180L4	-P180M4
Dimensions								
Total length	**L**	**[mm]**	935		1041		1135	
Motor length	**LB**	**[mm]**	400		501		595	
Length of motor options	**Δ L**	**[mm]**	118		144		108	
Motor diameter	**AC**	**[mm]**	281		302		281	
Distance motor/connection	**AD**	**[mm]**	182		231		282	



Dimensions, 4-pole motors

GKS11, 3-stage gearboxes

Dimensions with solid shaft and foot (VBR)
Dimensions with solid shaft and foot, centering (VAR)

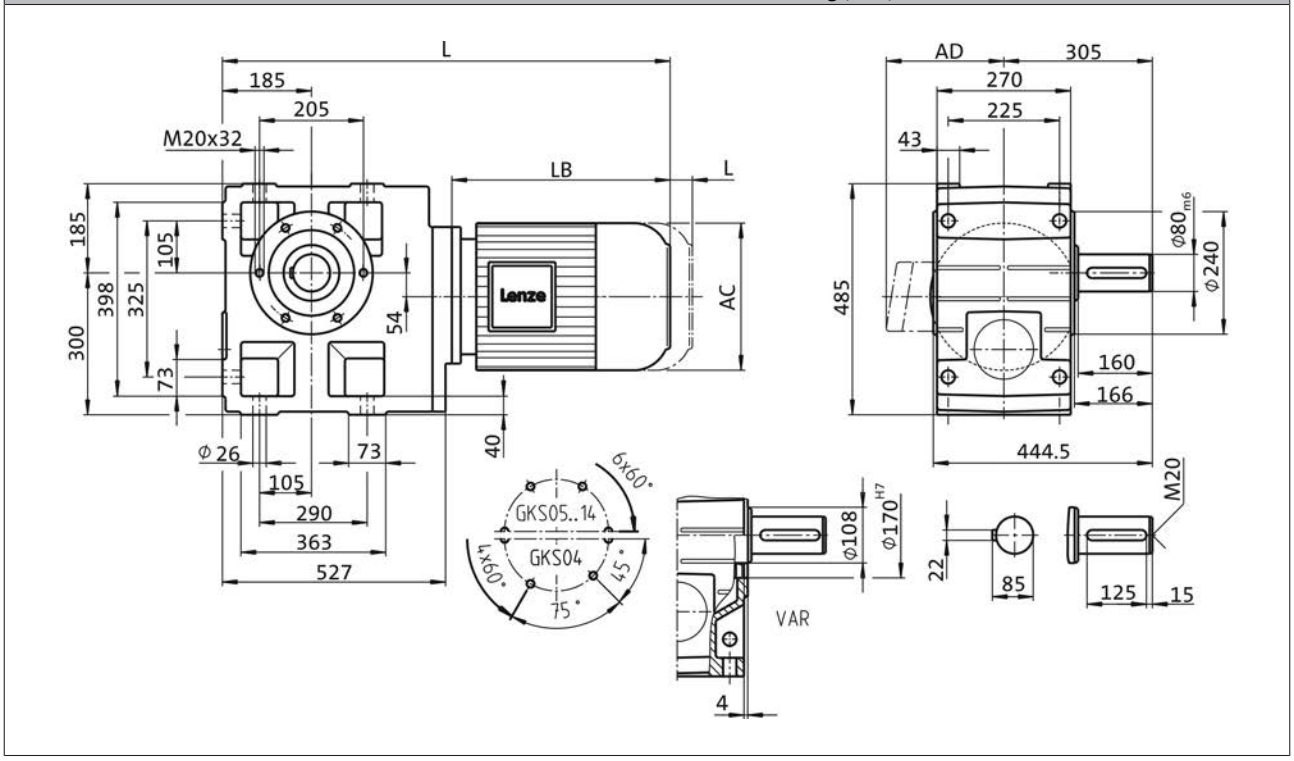

Product			m200					
			-P132L4	-P132M4	-P160L4	-P160M4	-P180L4	-P180M4
Dimensions								
Total length	**L**	**[mm]**	935		1041		1135	
Motor length	**LB**	**[mm]**	400		501		595	
Length of motor options	**Δ L**	**[mm]**	118		144		108	
Motor diameter	**AC**	**[mm]**	281		302		281	
Distance motor/connection	**AD**	**[mm]**	182		231		282	



Dimensions, 4-pole motors

GKS11, 3-stage gearboxes

Dimensions with solid shaft and foot, flange (VAK)

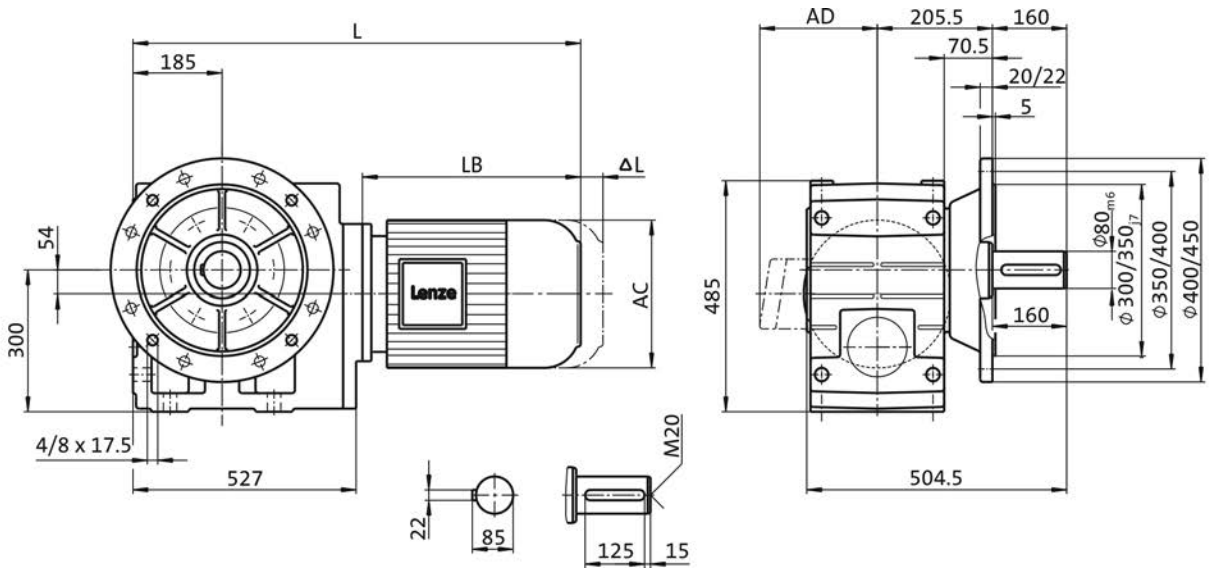

Product			m200					
			-P132L4	-P132M4	-P160L4	-P160M4	-P180L4	-P180M4
Dimensions								
Total length	**L**	**[mm]**	935		1041		1135	
Motor length	**LB**	**[mm]**	400		501		595	
Length of motor options	**Δ L**	**[mm]**	118		144		108	
Motor diameter	**AC**	**[mm]**	281		302		281	
Distance motor/connection	**AD**	**[mm]**	182		231		282	



Dimensions, 4-pole motors

GKS11, 4-stage gearboxes

Dimensions with hollow shaft and foot (HBR)
Dimensions with hollow shaft and foot, centering (HAR)

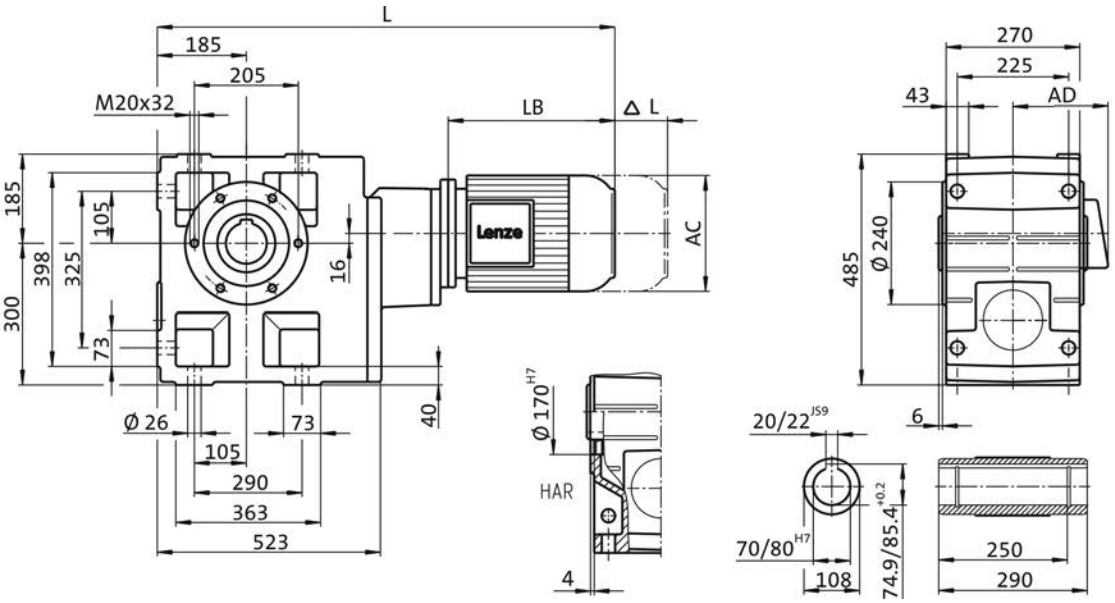

Product			m200	
			-P132L4	-P132M4
Dimensions				
Total length	**L**	**[mm]**	1076	
Motor length	**LB**	**[mm]**	400	
Length of motor options	**Δ L**	**[mm]**	118	
Motor diameter	**AC**	**[mm]**	281	
Distance motor/connection	**AD**	**[mm]**	182	



Dimensions, 4-pole motors

GKS11, 4-stage gearboxes

Dimensions with hollow shaft and foot, flange (HAK)

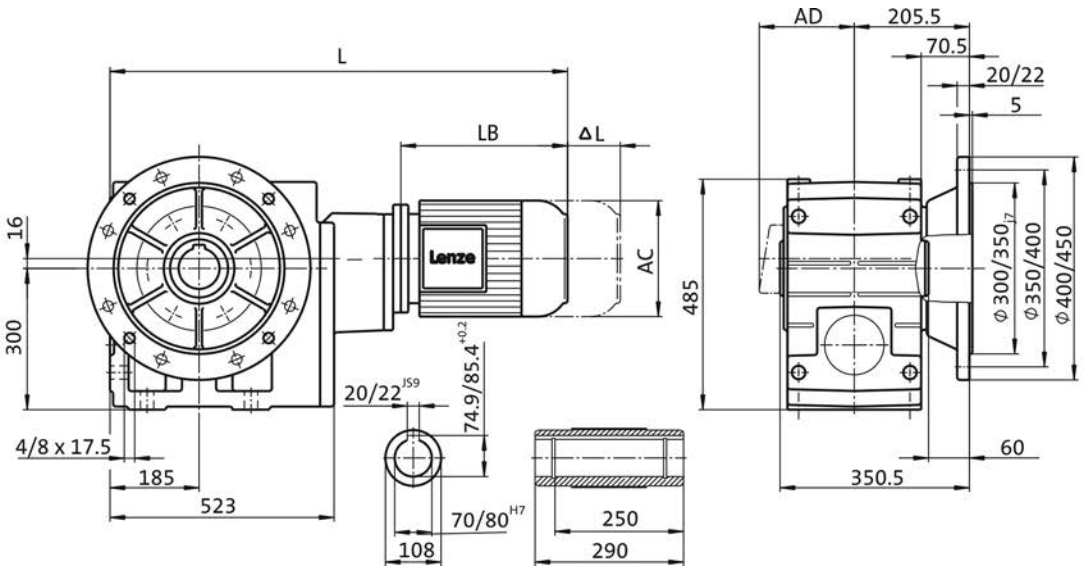

Product			m200	
			-P132L4	-P132M4
Dimensions				
Total length	**L**	**[mm]**	1076	
Motor length	**LB**	**[mm]**	400	
Length of motor options	**Δ L**	**[mm]**	118	
Motor diameter	**AC**	**[mm]**	281	
Distance motor/connection	**AD**	**[mm]**	182	



Dimensions, 4-pole motors

GKS11, 4-stage gearboxes

Dimensions with solid shaft and foot (VBR)
Dimensions with solid shaft and foot, centering (VAR)

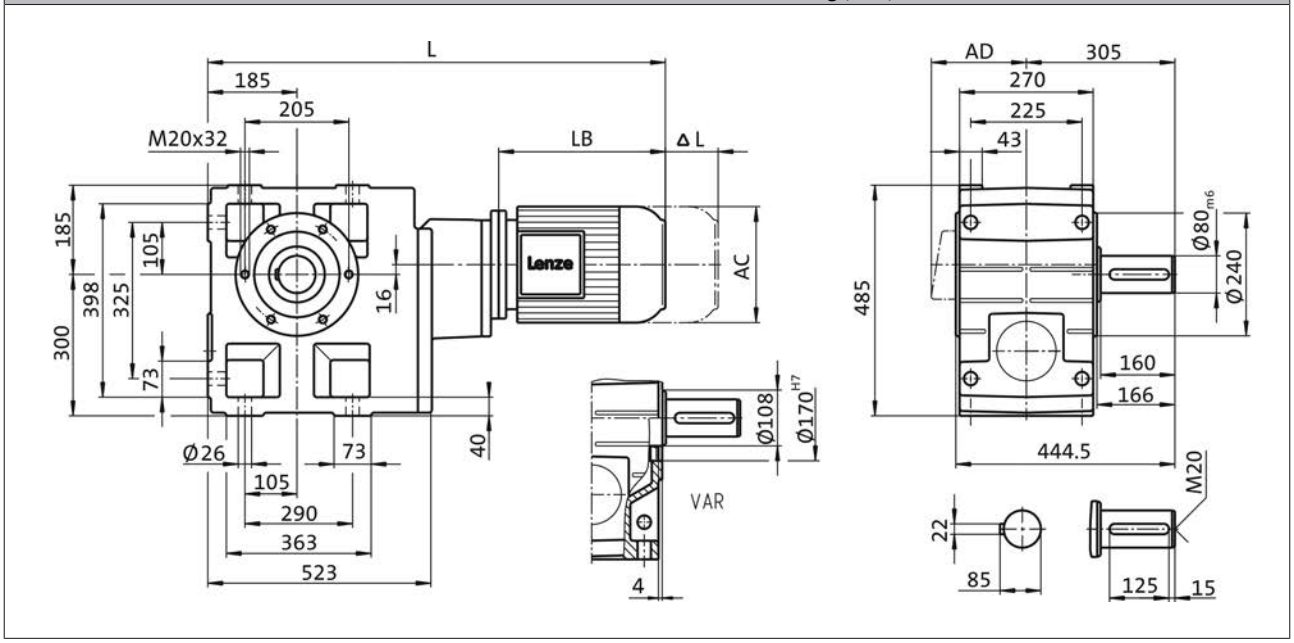

Product			m200	
			-P132L4	-P132M4
Dimensions				
Total length	**L**	**[mm]**	1076	
Motor length	**LB**	**[mm]**	400	
Length of motor options	**Δ L**	**[mm]**	118	
Motor diameter	**AC**	**[mm]**	281	
Distance motor/connection	**AD**	**[mm]**	182	



Dimensions, 4-pole motors

GKS11, 4-stage gearboxes

Dimensions with solid shaft and foot, flange (VAK)

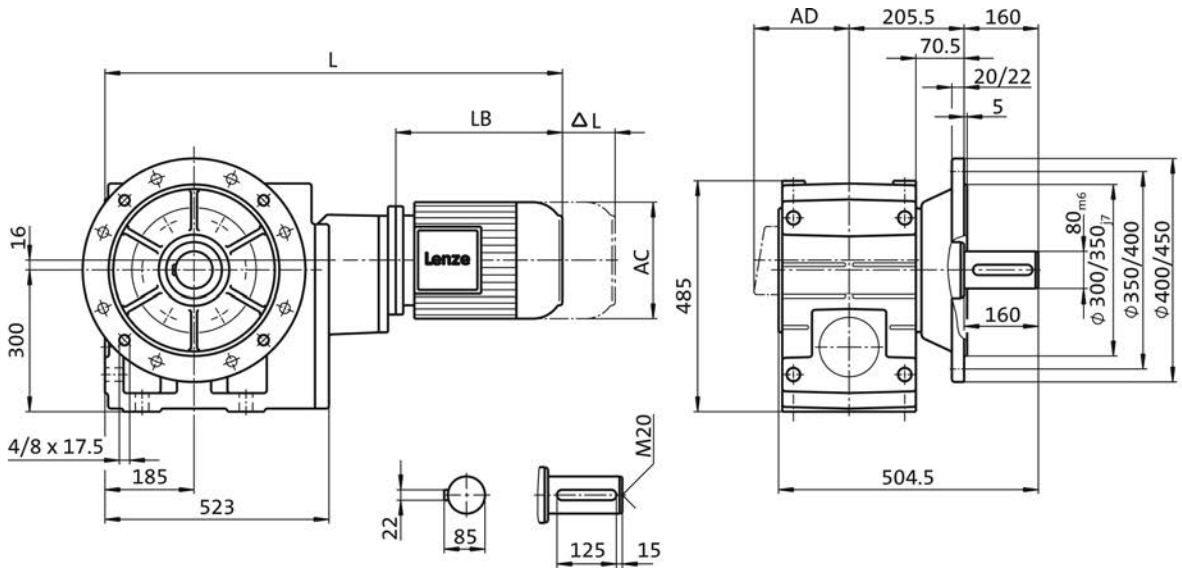

Product			m200	
			-P132L4	-P132M4
Dimensions				
Total length	**L**	**[mm]**	1076	
Motor length	**LB**	**[mm]**	400	
Length of motor options	**Δ L**	**[mm]**	118	
Motor diameter	**AC**	**[mm]**	281	
Distance motor/connection	**AD**	**[mm]**	182	



Dimensions, 4-pole motors

GKS14, 3-stage gearboxes

Dimensions with hollow shaft and foot (HBR)
Dimensions with hollow shaft and foot, centering (HAR)

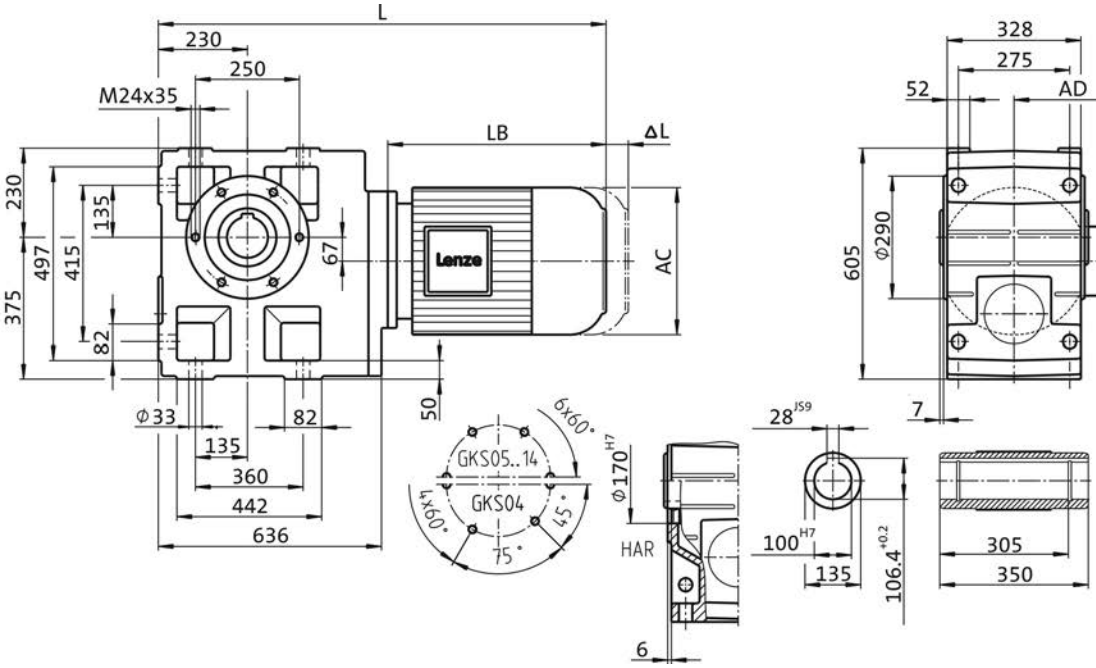

Product			m200						
			-P132L4	-P132M4	-P160L4	-P160M4	-P180L4	-P180M4	-P180V4
Dimensions									
Total length	**L**	**[mm]**	1034		1140		1234		1287
Motor length	**LB**	**[mm]**	400		501		595		648
Length of motor options	**Δ L**	**[mm]**	118		144		108		
Motor diameter	**AC**	**[mm]**	281		302		281		
Distance motor/connection	**AD**	**[mm]**	182		231		282		

Dimensions, 4-pole motors

GKS14, 3-stage gearboxes

Dimensions with hollow shaft and foot, flange (HAK)

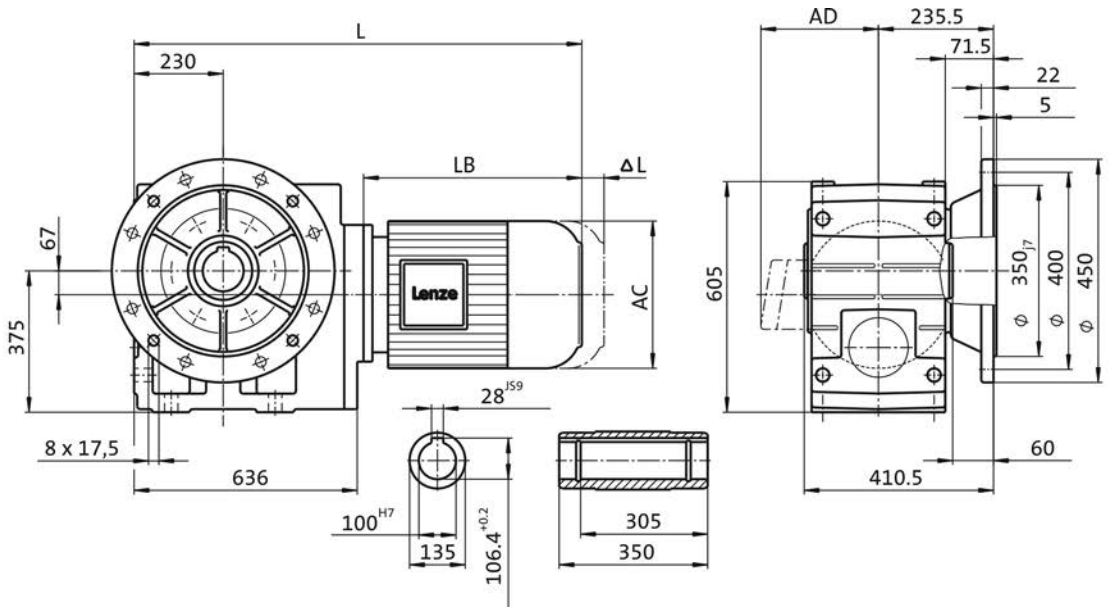

Product			m200						
			-P132L4	-P132M4	-P160L4	-P160M4	-P180L4	-P180M4	-P180V4
Dimensions									
Total length	**L**	**[mm]**	1034		1140		1234		1287
Motor length	**LB**	**[mm]**	400		501		595		648
Length of motor options	**Δ L**	**[mm]**	118		144		108		
Motor diameter	**AC**	**[mm]**	281		302		281		
Distance motor/connection	**AD**	**[mm]**	182		231		282		



Dimensions, 4-pole motors

GKS14, 3-stage gearboxes

Dimensions with solid shaft and foot (VBR)
Dimensions with solid shaft and foot, centering (VAR)

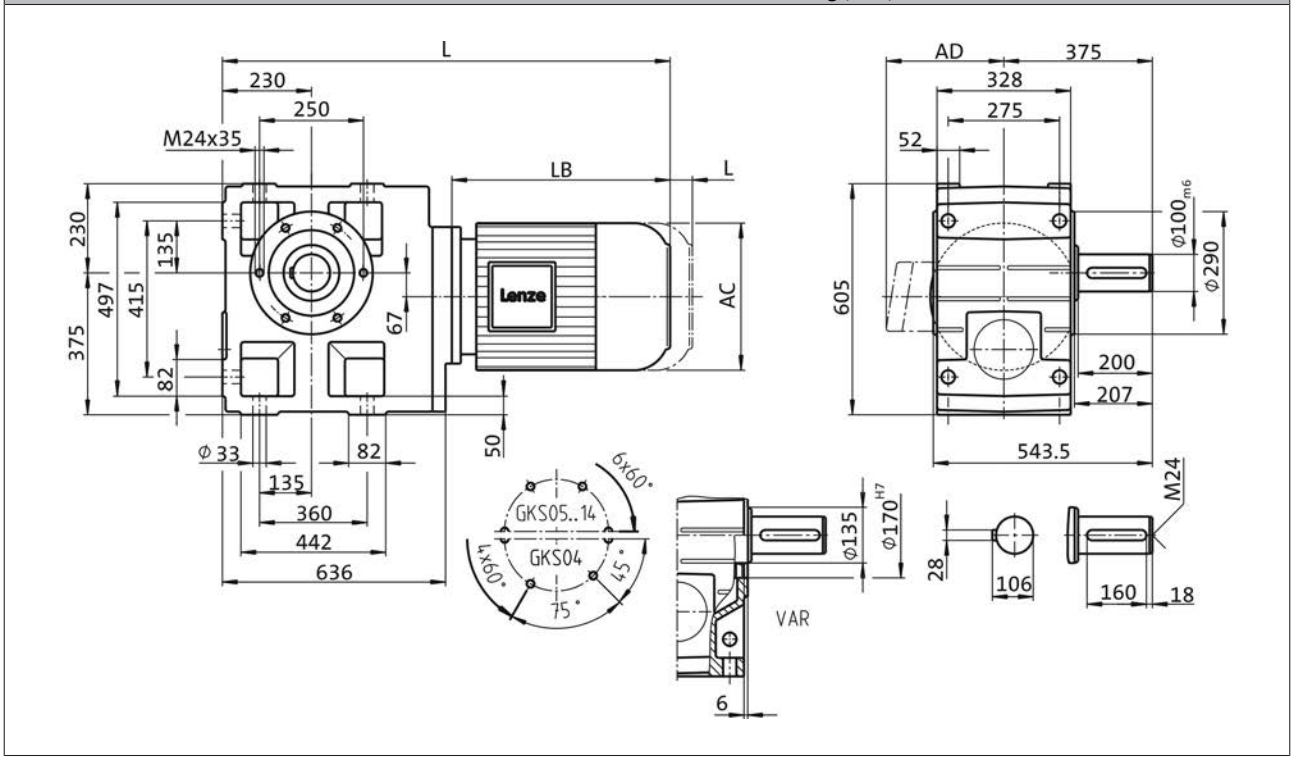

Product			m200						
			-P132L4	-P132M4	-P160L4	-P160M4	-P180L4	-P180M4	-P180V4
Dimensions									
Total length	**L**	**[mm]**	1034		1140		1234		1287
Motor length	**LB**	**[mm]**	400		501		595		648
Length of motor options	**Δ L**	**[mm]**	118		144		108		
Motor diameter	**AC**	**[mm]**	281		302		281		
Distance motor/connection	**AD**	**[mm]**	182		231		282		



Dimensions, 4-pole motors

GKS14, 3-stage gearboxes

Dimensions with solid shaft and foot, flange (VAK)

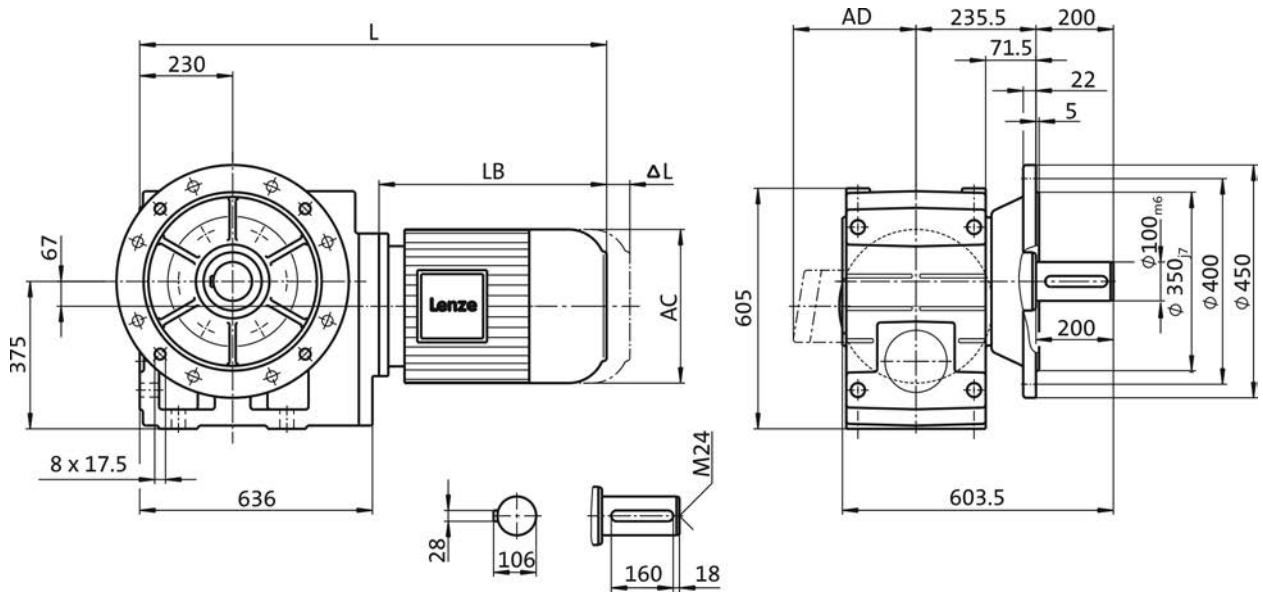

Product			m200						
			-P132L4	-P132M4	-P160L4	-P160M4	-P180L4	-P180M4	-P180V4
Dimensions									
Total length	**L**	**[mm]**	1034		1140		1234		1287
Motor length	**LB**	**[mm]**	400		501		595		648
Length of motor options	**Δ L**	**[mm]**	118		144		108		
Motor diameter	**AC**	**[mm]**	281		302		281		
Distance motor/connection	**AD**	**[mm]**	182		231		282		



Dimensions, 4-pole motors

GKS14, 4-stage gearboxes

Dimensions with hollow shaft and foot (HBR)
Dimensions with hollow shaft and foot, centering (HAR)

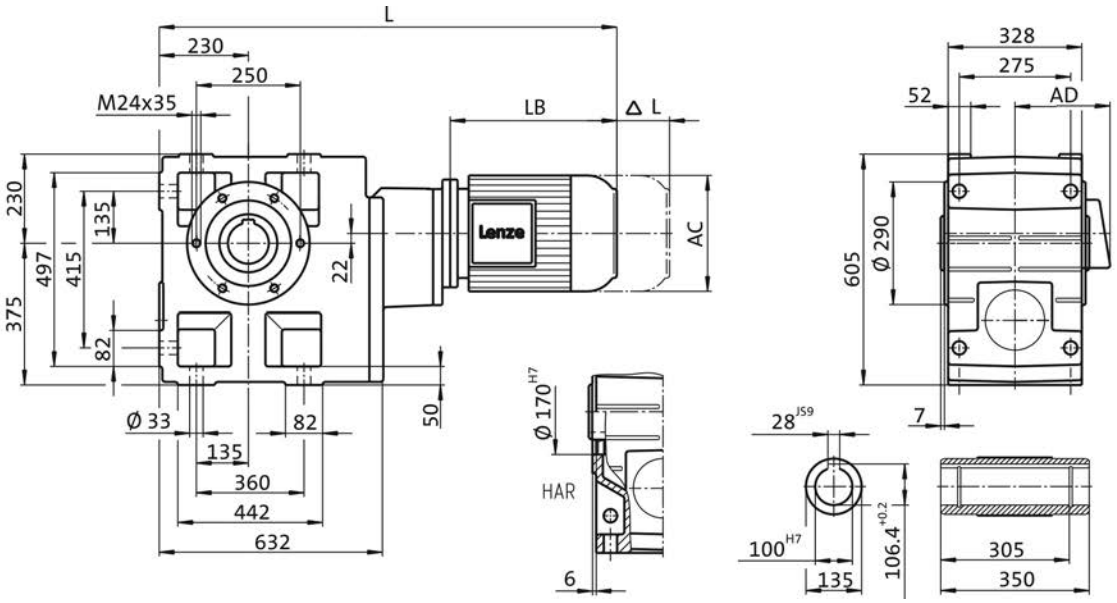

Product			m200				
			-P132L4	-P132M4	-P160L4	-P160M4	-P180M4
Dimensions							
Total length	**L**	**[mm]**	1209		1315		1409
Motor length	**LB**	**[mm]**	400		501		595
Length of motor options	**Δ L**	**[mm]**	118		144		108
Motor diameter	**AC**	**[mm]**	281		302		281
Distance motor/connection	**AD**	**[mm]**	182		231		282



Dimensions, 4-pole motors

GKS14, 4-stage gearboxes

Dimensions with hollow shaft and foot, flange (HAK)

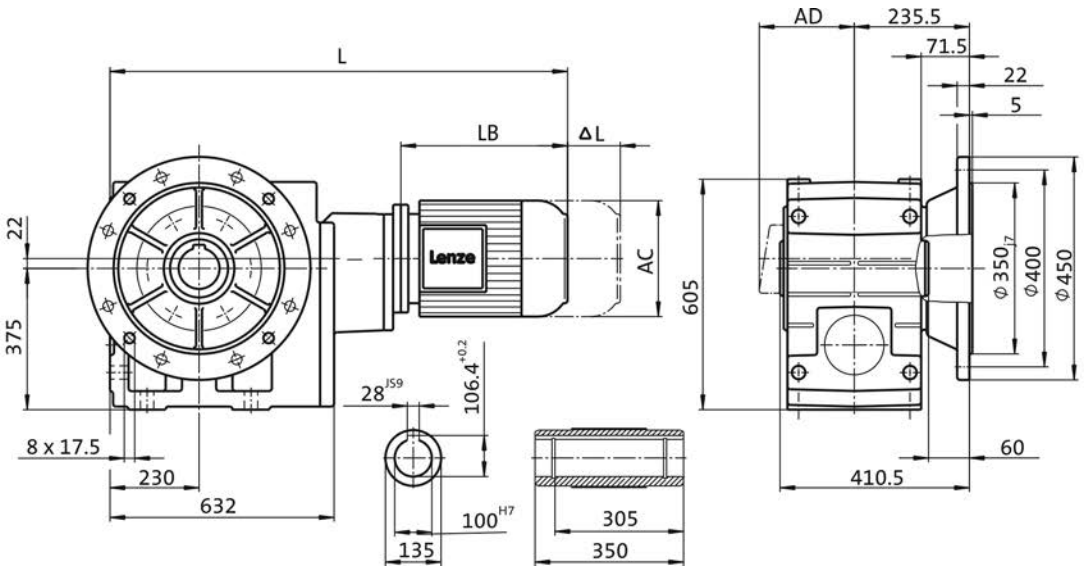

Product			m200				
			-P132L4	-P132M4	-P160L4	-P160M4	-P180M4
Dimensions							
Total length	**L**	**[mm]**	1209		1315		1409
Motor length	**LB**	**[mm]**	400		501		595
Length of motor options	**Δ L**	**[mm]**	118		144		108
Motor diameter	**AC**	**[mm]**	281		302		281
Distance motor/connection	**AD**	**[mm]**	182		231		282



Dimensions, 4-pole motors

GKS14, 4-stage gearboxes

Dimensions with solid shaft and foot (VBR)
Dimensions with solid shaft and foot, centering (VAR)

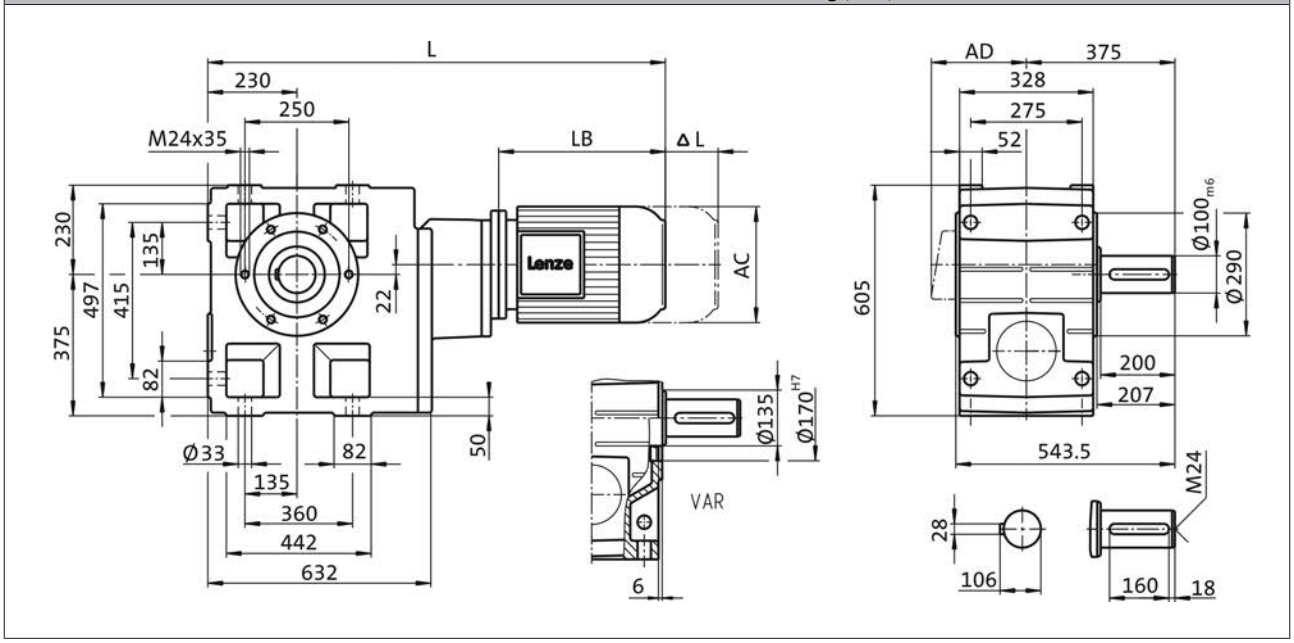

Product			m200				
			-P132L4	-P132M4	-P160L4	-P160M4	-P180M4
Dimensions							
Total length	**L**	**[mm]**	1209		1315		1409
Motor length	**LB**	**[mm]**	400		501		595
Length of motor options	**Δ L**	**[mm]**	118		144		108
Motor diameter	**AC**	**[mm]**	281		302		281
Distance motor/connection	**AD**	**[mm]**	182		231		282



Dimensions, 4-pole motors

GKS14, 4-stage gearboxes

Dimensions with solid shaft and foot, flange (VAK)

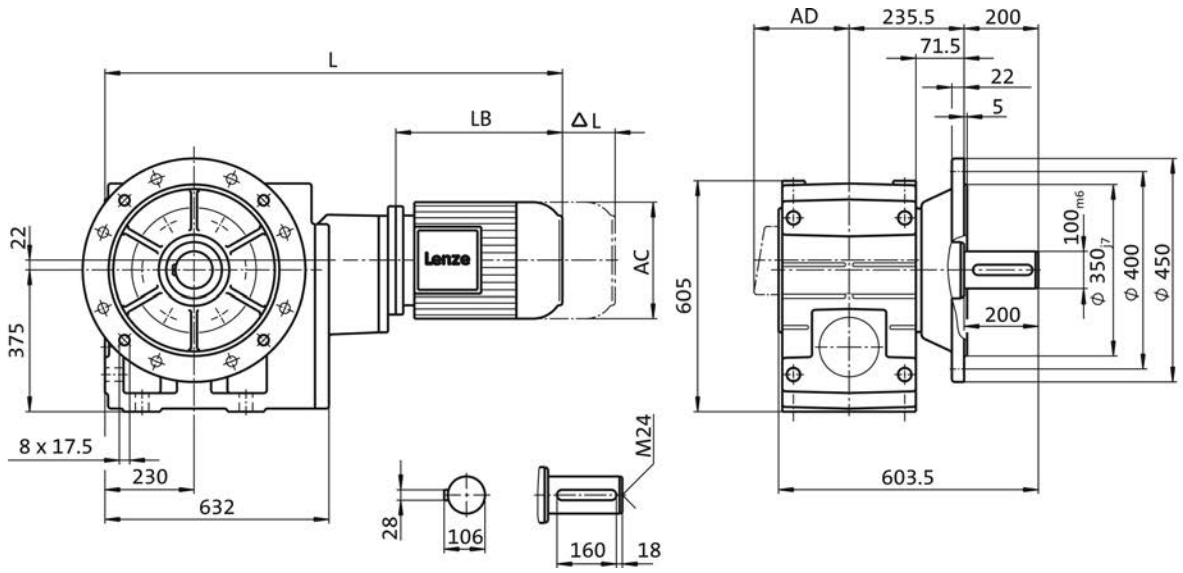

Product			m200				
			-P132L4	-P132M4	-P160L4	-P160M4	-P180M4
Dimensions							
Total length	**L**	**[mm]**	1209		1315		1409
Motor length	**LB**	**[mm]**	400		501		595
Length of motor options	**Δ L**	**[mm]**	118		144		108
Motor diameter	**AC**	**[mm]**	281		302		281
Distance motor/connection	**AD**	**[mm]**	182		231		282





Hollow shaft with shrink disc

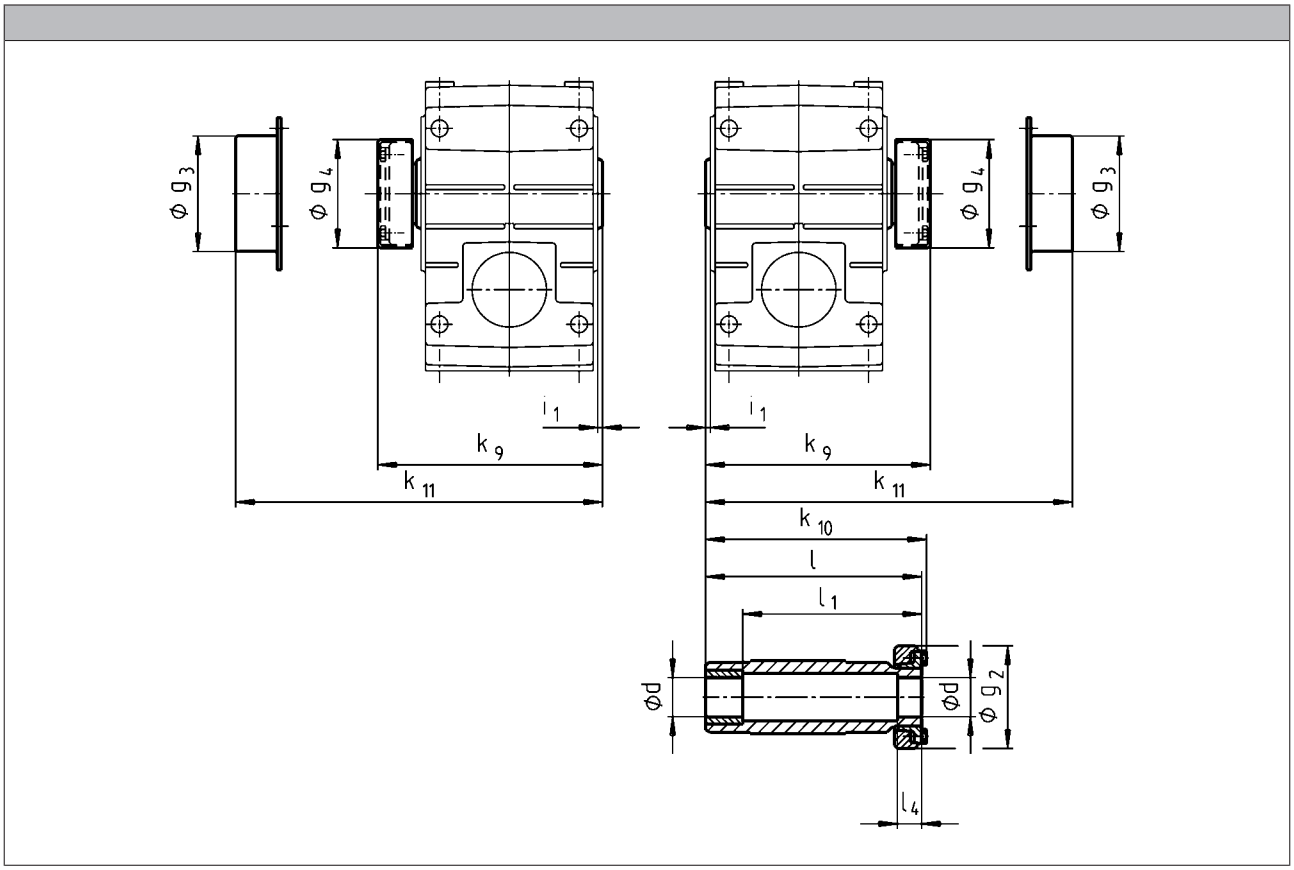

	d	g_2	g_3	g_4	i_1	k_9	k_{10}	k_{11}	l	l_1	l_4
	h6										
GKS04	25 30	72	79	76	2.5	150	148	154	142	122	26
GKS05	35	80	90	84	4.0	176	174	179	168	148	28
GKS06	40	90	100	94	5.0	202	200	204	194	164	30
GKS07	50	110	124	116		241	238	244	232	192	26
GKS09	65	141	159	147		288	285	287	278	228	30
GKS11	80	170	191	176	6.0	347	344	349	338	238	42
GKS14	100	215	253	221	7.0	418	415	421	407	307	55

- ► Output flange and hollow shaft with shrink disc (output version SAK) are not possible in the same location. For additional dimensions see output version H□□.
- ► Ensure that the strength of the machine shaft material is adequate in shrink disc designs.
  When using typical steels, e.g. C45, 42CrMo4, the torques listed in the selection tables can be used without restriction.
  Please consult us if you wish to use material that is considerably weaker. Medium surface roughness Rz must not exceed 15 µm (turning is sufficient).



Mounting set for hollow shaft circlip:
Proposed design for auxiliary tools

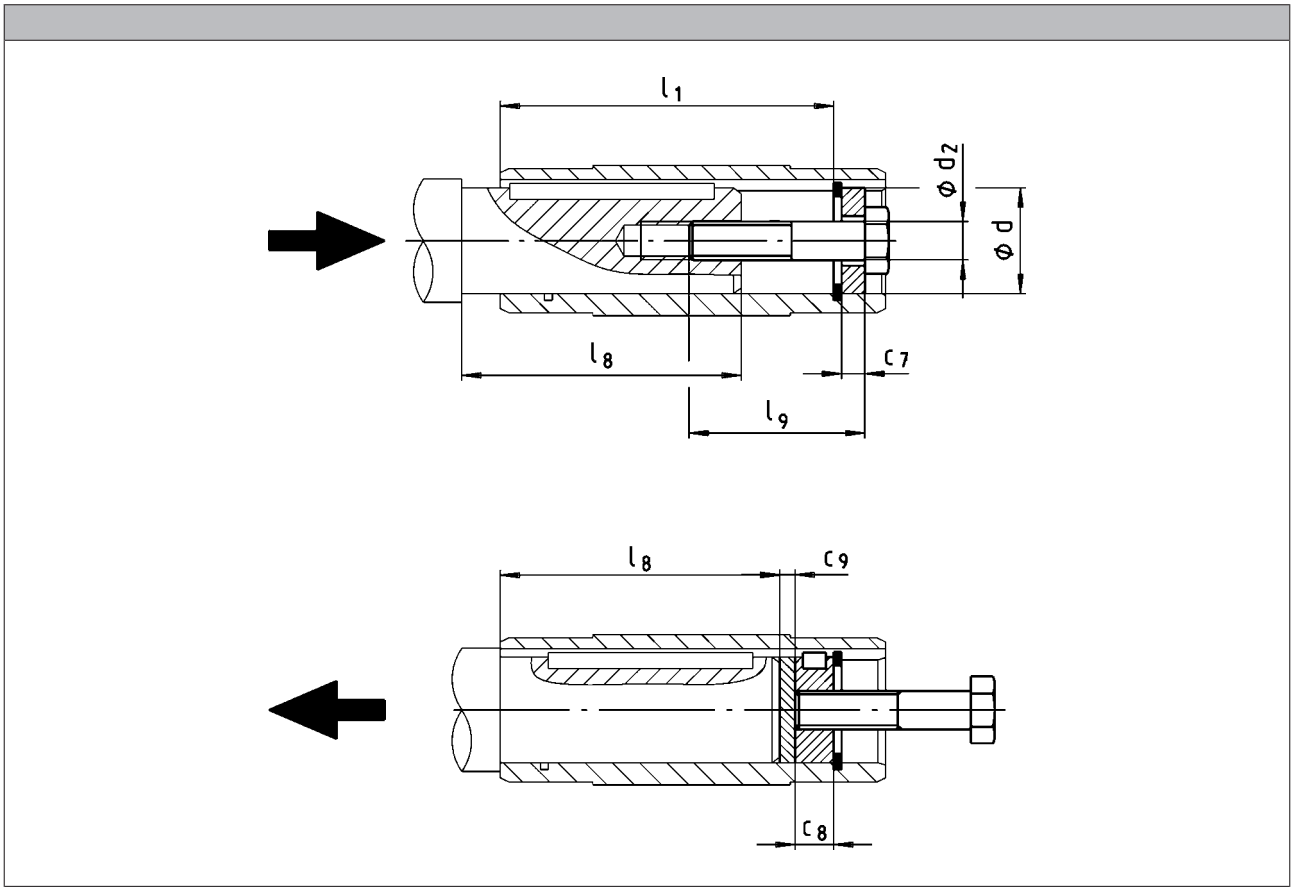

	d	l_1	d_2	l_9	c_7	c_8	c_9	$l_{8,\,max}$
	H7							
GKS04	25 30	100	M10	40	5	10	3	85
					6			
GKS05	30 35	124						107
			M12	50	7	12		
GKS06	40 45	140	M16	60	8	16	4	118
					9			
GKS07	50 55	175			10		5	148
			M20	80	11	20		
GKS09	60 70	210			13			182
					14			
GKS11	70 80	250					6	221
					16			
GKS14	100	305	M24	100	20	24	8	270



Hoseproof hollow shaft cover

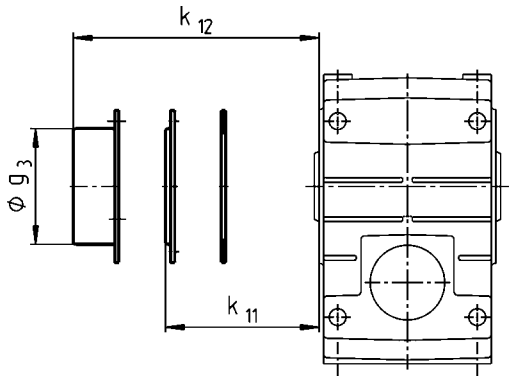

► Cover including gasket

	k_{11}	k_{12}	g_3
GKS04	9		
GKS05	10		
GKS06	11		
GKS07			
GKS09		54	159
GKS11		67	191
GKS14		80	253



Gearboxes with 2nd output shaft end

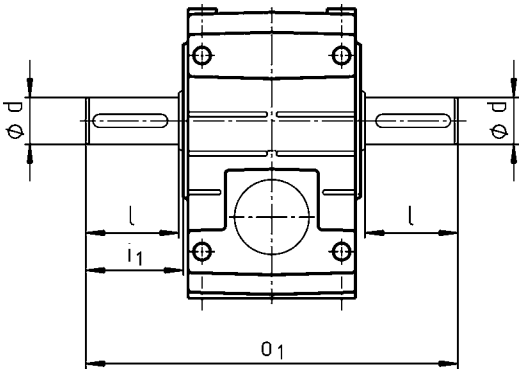

	d	d	l	i_1	o_1
	k6	m6			
GKS04	25		50	52.5	215
GKS05	30		60	64.0	260
GKS06	40		80	85.0	320
GKS07	50		100	105.0	400
GKS09		60	120	125.0	480
GKS11		80	160	166.0	610
GKS14		100	200	207.0	750



Torque plate on threaded pitch circle

In position 3

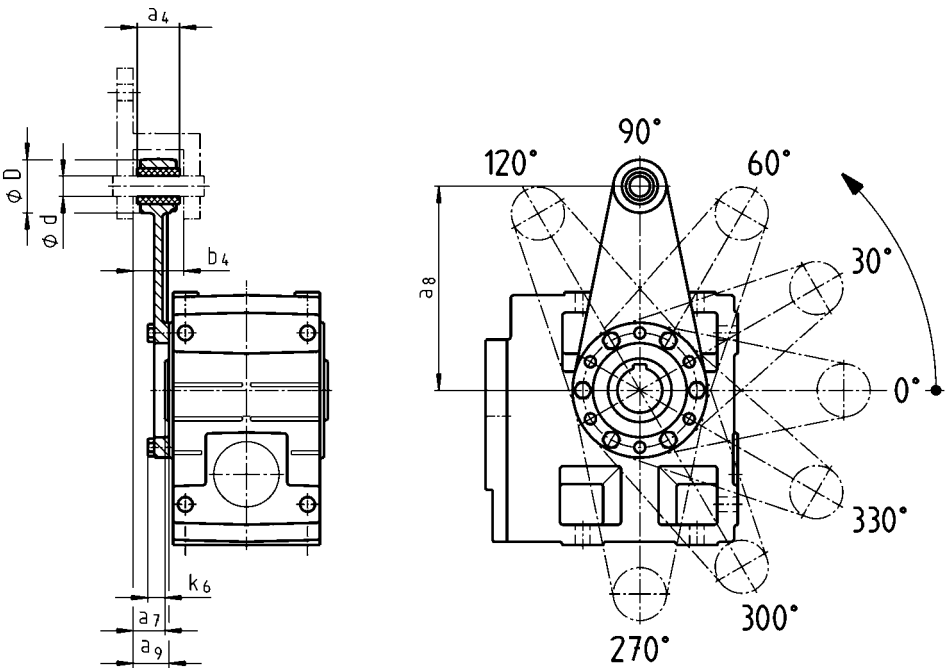

In position 5

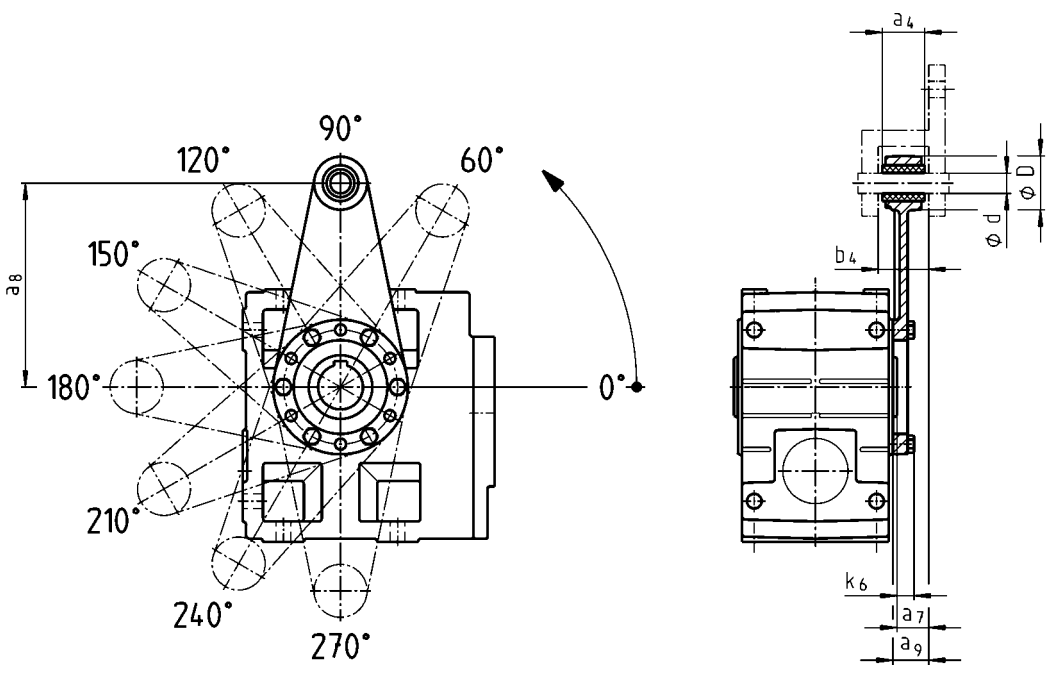

	a_4	a_7	a_8	a_9	b_4	d	D	k_6
GKS04	30	24.0	130	26.5	34.5	12	35	16
GKS05	34	23.5	160	27.5	38.5	16	45	15
GKS06	40	28.0	200	33.0	44.5	20	50	18
GKS07	46	32.5	250	37.5	50.5	25	65	21



Torque plate at housing foot

In position 2, 4 or 6

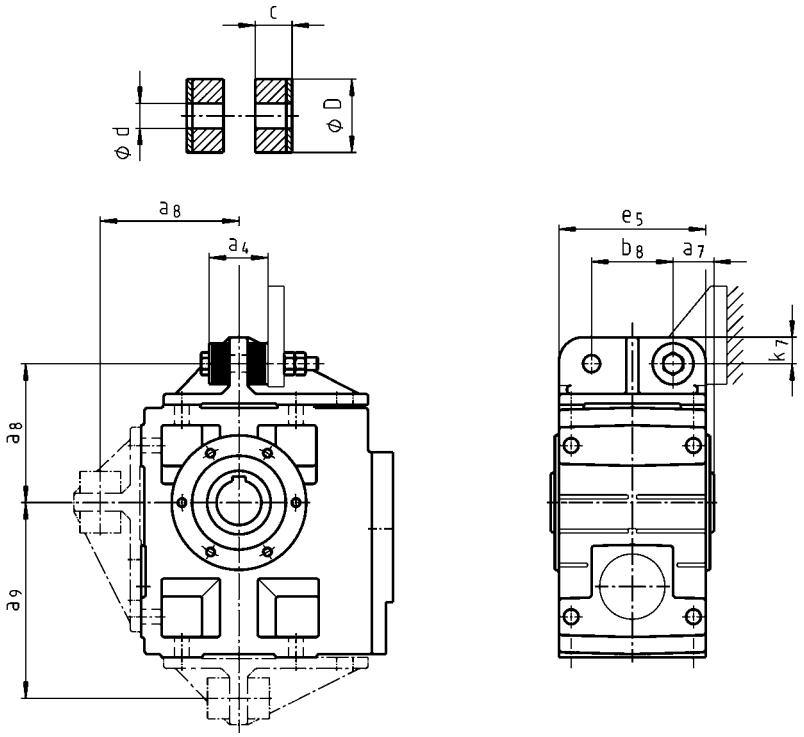

	a_4	a_7	a_8	a_9	b_8	c	d	D	e_5	k_7
GKS04	41	27.5	106	135.0	60	14.5	11	30	100	20
GKS05	45	35.0	115	160.0	70	15.0	13	40	127	25
GKS06	72	40.0	145	195.0	80	27.0	17	50	145	28
GKS07	78	50.0	170	240.0	100	28.0	21	60	180	35
GKS09	86	60.0	214	300.0	120	29.0	26	72	222	46
GKS11	94	72.5	260	375.0	145	30.0	31	92	270	55
GKS14	100	85.0	320	465.0	180		39	110	328	70

Ventilations

Position of ventilation, sealing elements and oil level check

GKS05...14-3

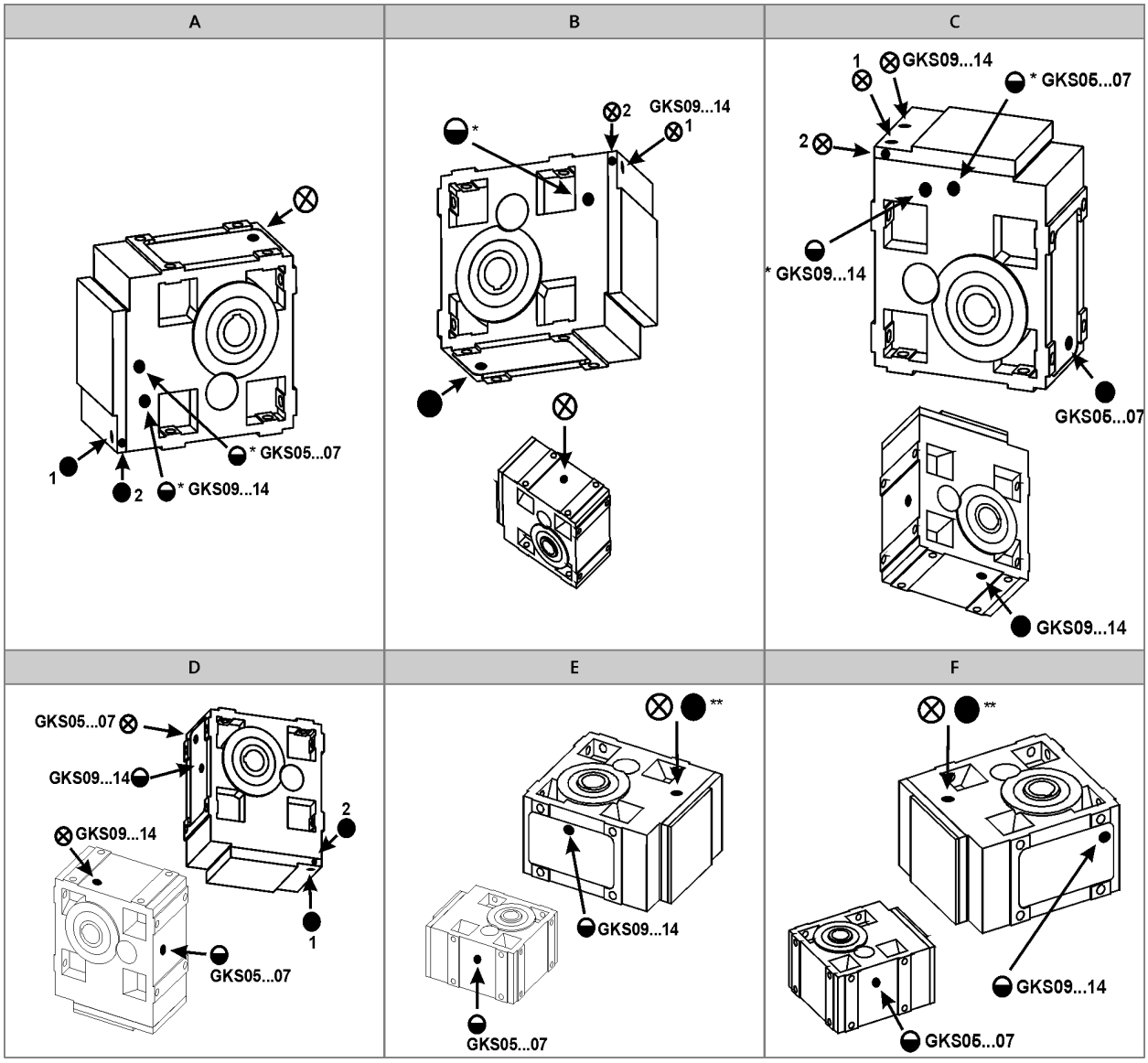

A to F Mounting position
⊗ Ventilation / Oil filler plug
● Oil drain plug
◒ Oil control plug
* On both sides
** On opposite side

Pos.1 standard
Pos.2 only for:
- GKS05-3M □□□ 090□□□
- GKS05-3M □□□ 100□□□
- GKS06-3M □□□ 112□□□
- GKS07-3M □□□ 160□□□

6.4

Ventilations

Position of ventilation, sealing elements and oil level check

GKS05...14-4

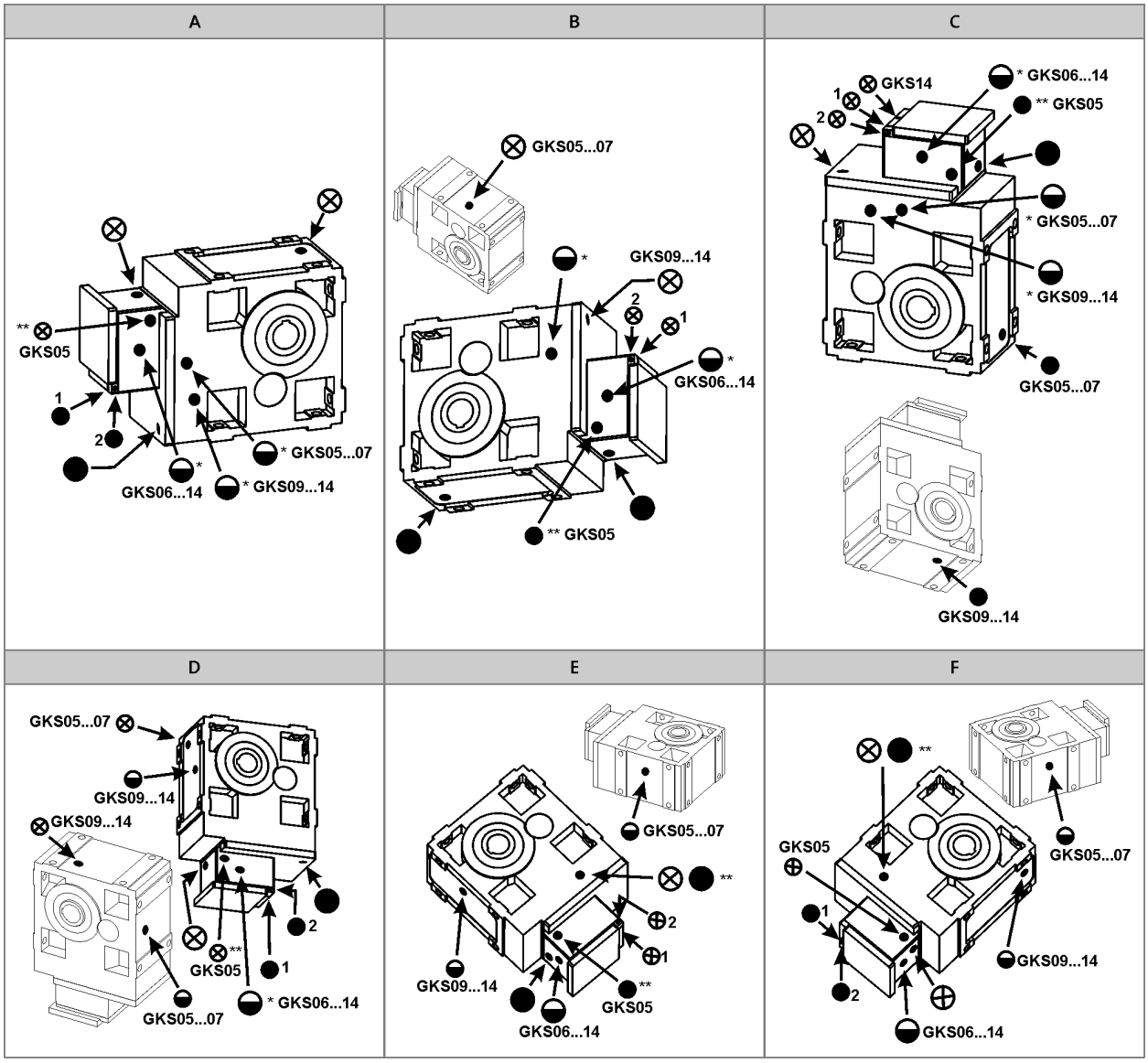

A to F Mounting position
⊗ Ventilation / Oil filler plug
● Oil drain plug
◒ Oil control plug
* On both sides
** On opposite side

Pos.1 standard
Pos.2 only for:
- GKS07-4M □□□ 090□□□
- GKS07-4M □□□ 100□□□
- GKS09-4M □□□ 112□□□



Ventilations

Compensation reservoir for mounting position C

GKS□□-3

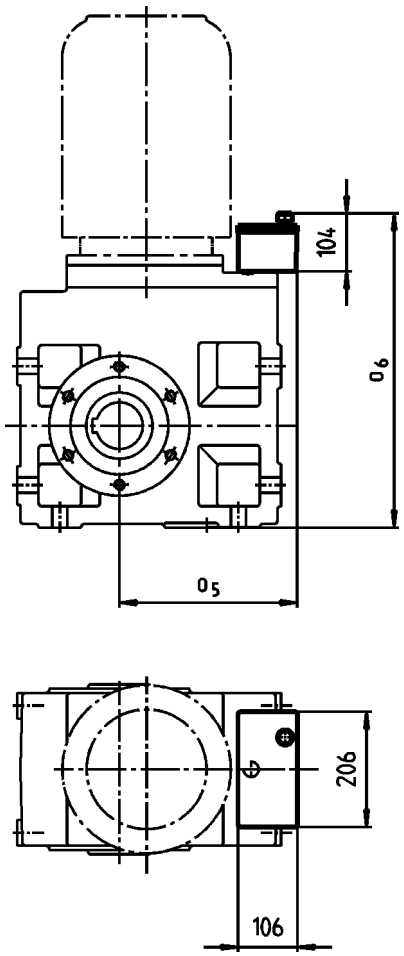

Motor	090 100		112		132		160 180 225	
	o_5 [mm]	o_6 [mm]	o_5 [mm]	o_6 [mm]	o_5 [mm]	o_6 [mm]	o_5 [mm]	o_6 [mm]
GKS09	243	533	265	533	282	533	297	533
GKS11	258	626	280	630	304	630	318	630
GKS14			313	739	343	739	343	739

► Terminal box position 4 not permitted.



IE3 three-phase AC motors m200

Mains operation 5.5 ... 45 kW

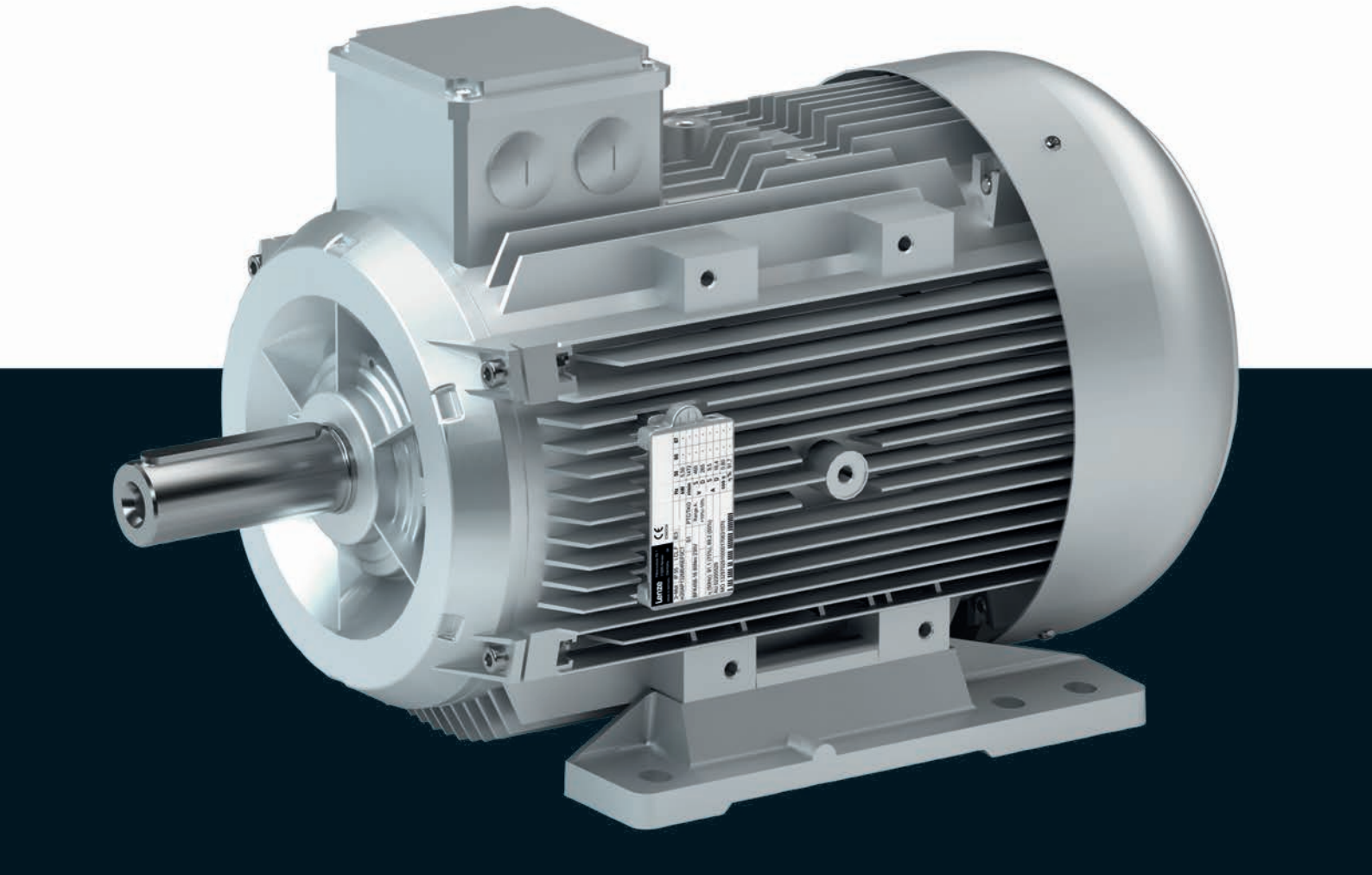

IE3 three-phase AC motors m200



Contents

General information	List of abbreviations	6.6 - 4
	Mains-operated motors	6.6 - 5
	Product information	6.6 - 5
	Equipment	6.6 - 6
	The modular motor system	6.6 - 7
Technical data	Standards and operating conditions	6.6 - 11
	Permissible radial and axial forces	6.6 - 12
	Rated data for 50 Hz	6.6 - 14
	Dimensions, self-ventilated (4-pole)	6.6 - 15
Accessories	Surface and corrosion protection	6.6 - 21
	Motor connection	6.6 - 22
	Connection via terminal box	6.6 - 24
	Spring-applied brake	6.6 - 26
	Temperature monitoring	6.6 - 37



List of abbreviations

$\eta_{100\,\%}$	[%]	Efficiency
$\eta_{75\,\%}$	[%]	Efficiency
$\eta_{50\,\%}$	[%]	Efficiency
cos ϕ		Power factor
I_N	[A]	Rated current
I_{max}	[A]	Max. current consumption
J	[kgcm²]	Moment of inertia
m	[kg]	Mass
M_a	[Nm]	Starting torque
M_b	[Nm]	Stalling torque
M_{max}	[Nm]	Max. torque
M_N	[Nm]	Rated torque
n_N	[r/min]	Rated speed
P_N	[kW]	Rated power
P_{max}	[kW]	Max. power input

U_{max}	[V]	Max. mains voltage
U_{min}	[V]	Min. mains voltage
$U_{N,\Delta}$	[V]	Rated voltage
$U_{N,Y}$	[V]	Rated voltage

CE	Communauté Européenne
CSA	Canadian Standards Association
DIN	Deutsches Institut für Normung e.V.
EMC	Electromagnetic compatibility
EN	European standard
IEC	International Electrotechnical Commission
IM	International Mounting Code
IP	International Protection Code
NEMA	National Electrical Manufacturers Association
UL	Underwriters Laboratory Listed Product
UR	Underwriters Laboratory Recognized Product
VDE	Verband deutscher Elektrotechniker (Association of German Electrical Engineers)
CCC	China Compulsory Certificate
EAC	Customs union Russia / Belarus / Kazakhstan certificate
cURus	Combined certification marks of UL for the USA and Canada
UkrSEPRO	Certificate for Ukraine



Mains-operated motors

In a power range of 0.12 to 45 KW, Lenze offers mains-operated three-phase AC motors for basic tasks.

These drives differ from each other with regard to their efficiency class and can be used for the types required for mains operation.

Customer benefit

- Different efficiency classes for the greatest economic benefit
- Saving of space by compact direct mounting to Lenze gearboxes
- Optimum adaptation of the brake reaction by optional holding brakes and service brakes
- Optional overheat control by temperature monitoring

Motor	Efficiency class	Power range	Mains voltage	Mains frequency
MD three-phase AC motor	IE1 motor	0.12 ... 22 kW	230/400 and 460 V	50 and 60 Hz
MH three-phase AC motor	IE2 motor	0.75 ... 45 kW	230/400 and 460 V	50 and 60 Hz
m200-P three-phase AC motor	IE3 motor	5.5 ... 45 kW	400 V	50 Hz
Lenze Smart Motor m300		1.75 and 5 Nm	400 ... 460 V	50 and 60 Hz

Product information

The product name

Operational performance	Product range		Design	Peak height	Motor length	Number of poles	Product
Mains operation	m200	-	P	132	M	4	m200-P132M4
					L		m200-P132L4
				160	M		m200-P160M4
					L		m200-P160L4
				180	M		m200-P180M4
					L		m200-P180L4
					V		m200-P180V4
				200	M		m200-P200M4
				225			m200-P225M4
					L		m200-P225L4



Equipment

Overview

The equipment includes all the options available as standard and all the built-on accessories of the product.

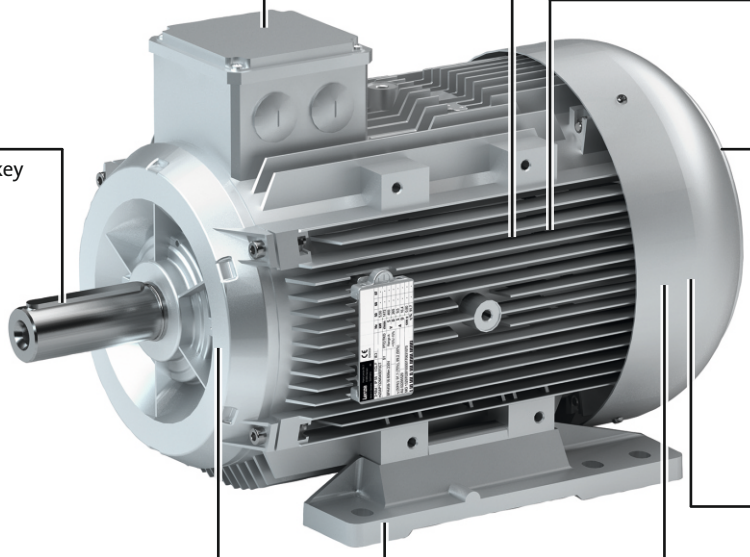

Motor connection
Terminal box

Output shaft
Solid shaft with feather key

Motor design
Flange (B5)with through holes

Motor design
Foot (B3)

Number of poles
4-pole, 5.5 ... 45 kW

Temperature monitoring
No
Thermal contact TKO
pTC thermistor

Cooling
Integral fan

Feedback
Without

Spring-applied brake
No
Standard
Option manual release lever



The modular motor system

Motor details

Product	m200-P132M4	m200-P132L4	m200-P160M4	m200-P160L4	m200-P180M4	m200-P180L4
Technical data						
Rated power	5.5 kW	7,5 kW	11 kW	15 kW	18.5 kW	22 kW
Mains voltage	400 V					
Mains frequency	50 Hz					
Operating mode	S1					
Motor design	B3 B5-FF265		B3 B5-FF300			
Motor shaft	38 x 80 mm		42 x 110 mm		48 x 110 mm	
Colour	Primed Paint in various corrosion-protection designs in accordance with RAL colours					
Surface and corrosion protection	Without OKS(uncoated) OKS-G (primed) OKS-S (Small); OKS-M (medium) OKS-L (large)					
Connection type	Terminal box					
Spring-applied brake						
Rated torque [Nm]	60 80		80 150		150 260	
Brake voltage [V]	DC 24 AC 230 AC 400					
Brake design	Standard					
	Standard					
Options	Manual release lever					
Feedback	Without					
Cooling	Integral fan					
Temperature monitoring	Without TKO thermal contact PTC thermistor					
Enclosure	IP55					



The modular motor system

Motor details

Product	m200-P180V4 [1]	m200-P200M4	m200-P225M4	m200-P225L4
Technical data				
Rated power	30 kW		37 kW	45 kW
Mains voltage	400 V			
Mains frequency	50 Hz			
Operating mode	S1			
Motor design		B3 B5-FF350	B3 B5-FF400	
Motor shaft		55 x 110 mm	60 x 140 mm	
Colour	Primed Paint in various corrosion-protection designs in accordance with RAL colours			
Surface and corrosion protection	Without OKS(uncoated) OKS-G (primed) OKS-S (Small); OKS-M (medium) OKS-L (large)			
Connection type	Terminal box			
Spring-applied brake				
Rated torque [Nm]	150 260		400	
Brake voltage [V]	DC 24 AC 230 AC 400			
Brake design	Standard			
	Standard			
Options	Manual release lever			
Feedback	Without			
Cooling	Integral fan			
Temperature monitoring	Without TKO thermal contact PTC thermistor			
Enclosure	IP55			

[1] This motor is intended for direct mounting to a gearbox and is not available in motor design B3 or B5.



The modular motor system

Motor details

Design
 B3 (with foot)  B5 (with flange)

Connection type
 Terminal box

Cooling: integral fan
 Without built-on accessories  With spring-applied brake With or without manual release lever





Standards and operating conditions

Overview

Enclosure			
EN 60529			IP55 [1]
Energy efficiency class			
IEC 60034-30			IE3
IEC 60034-2-1			Methodology for measuring efficiency
Conformity			
CE			Low-Voltage Directive
			2006/95/EC
Temperature class			
IEC/EN 60034-1; utilisation			B
IEC/EN 60034-1; insulation system (enamel-insulated wire)			F
Vibrational severity			
IEC/EN 60034-14			A
Climatic conditions			
Transport (EN 60721-3-2)			2K3 (temperature: -20 °C ... +70 °C)
Storage (EN 60721-3-1)			1K3 (temperature: -20 °C ... +60 °C)
Storage (EN 60721-3-1) > 3 months			1K3 (Temperature: -20 °C ... +40 °C)
Operation (EN 60721-3-3)			3K3 (temperature: -20°C ... +40°C)
Operation (EN 60721-3-3) with brake			3K3 (temperature: -10 °C ... +40 °C)
Operation (EN 60721-3-3) with blower			3K3 (Temperature: -15 °C ... +40 °C)
Max. ambient operating temperature			
With power reduction	$T_{opr,max}$	[°C]	60
Site altitude			
Amsl	H_{max}	[m]	4000

[1] Types with deviating degrees of protection:
IP55 with brake (IP54 with manual release lever).

► In the European Union, the ErP Directive stipulates minimum efficiency levels for three-phase AC motors. Geared three-phase AC motors that do not conform with this Directive do not meet CE requirements and must not be marketed in the European Economic Area. For further information about the ErP Directive and the Lenze products to which it relates, please refer to the brochure entitled "International efficiency directives for three-phase AC motors".



Permissible radial and axial forces

Application of forces

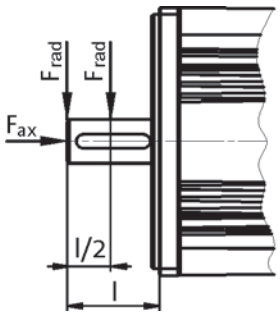

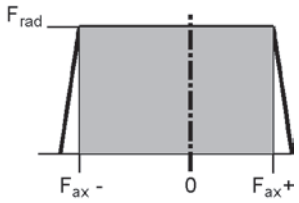

Application of force at l/2

► Forces at medium speed 1500 r/min

Bearing service life L_{10}												
	10000 h			20000 h			30000 h			50000 h		
	F_{rad} [N]	$F_{ax,-}$ [N]	$F_{ax,+}$ [N]	F_{rad} [N]	$F_{ax,-}$ [N]	$F_{ax,+}$ [N]	F_{rad} [N]	$F_{ax,-}$ [N]	$F_{ax,+}$ [N]	F_{rad} [N]	$F_{ax,-}$ [N]	$F_{ax,+}$ [N]
m200-P132M4	2323	-653	1253	1863	-422	1022	1639	-313	913	1357	-201	801
m200-P132L4	2323	-653	1253	1863	-422	1022	1639	-313	913	1357	-201	801
m200-P160M4	4074	-1407	2067	3264	-984	1644	2871	-787	1447	2444	-583	1243
m200-P160L4	4074	-1407	2067	3264	-984	1644	2871	-787	1447	2444	-583	1243
m200-P180M4	4943	-1580	2480	3969	-1088	1988	3496	-854	1754	2983	-594	1494
m200-P180L4	4943	-1580	2480	3969	-1088	1988	3496	-854	1754	2983	-594	1494
m200-P200M4	6666	-2202	3122	5359	-1555	2475	4724	-1251	2171	4036	-942	1862
m200-P225M4	7386	-2527	3477	5956	-1800	2750	5260	-1460	2410	4508	-1111	2061
m200-P225L4	7386	-2527	3477	5956	-1800	2750	5260	-1460	2410	4508	-1111	2061

► The values for the bearing service life L_{10} refer to an average speed of 1500 r/min and are additionally reduced by the grease lifetime, depending on the ambient temperatures.
► Data for axial forces relate to the maximum radial force with the corresponding bearing service life.



Permissible radial and axial forces

Application of force at l

► Forces at medium speed 1500 r/min

Bearing service life L_{10}												
	10000 h			20000 h			30000 h			50000 h		
	F_{rad} [N]	$F_{ax,-}$ [N]	$F_{ax,+}$ [N]	F_{rad} [N]	$F_{ax,-}$ [N]	$F_{ax,+}$ [N]	F_{rad} [N]	$F_{ax,-}$ [N]	$F_{ax,+}$ [N]	F_{rad} [N]	$F_{ax,-}$ [N]	$F_{ax,+}$ [N]
m200-P132M4	2091	-653	1253	1677	-422	1022	1475	-313	913	1257	-201	801
m200-P132L4	2091	-653	1253	1677	-422	1022	1475	-313	913	1257	-201	801
m200-P160M4	3610	-1407	2067	2892	-984	1644	2543	-787	1447	2166	-583	1243
m200-P160L4	3610	-1407	2067	2892	-984	1644	2543	-787	1447	2166	-583	1243
m200-P180M4	4462	-1580	2480	3583	-1088	1988	3156	-854	1754	2693	-594	1494
m200-P180L4	4462	-1580	2480	3583	-1088	1988	3156	-854	1754	2693	-594	1494
m200-P200M4	6069	-2202	3122	4880	-1555	2475	4301	-1251	2171	3675	-942	1862
m200-P225M4	6588	-2527	3477	5313	-1800	2750	4692	-1460	2410	4021	-1111	2061
m200-P225L4	6588	-2527	3477	5313	-1800	2750	4692	-1460	2410	4021	-1111	2061

► The values for the bearing service life L_{10} refer to an average speed of 1500 r/min and are additionally reduced by the grease lifetime, depending on the ambient temperatures.
► Data for axial forces relate to the maximum radial force with the corresponding bearing service life.



Rated data for 50 Hz

4-pole motors

	P_N	n_N	$U_{N,\Delta}$	$I_{N,\Delta}$	$U_{N,Y}$	$I_{N,Y}$	I_a/I_N
			± 5 %		± 5 %		
	[kW]	[r/min]	[V]	[A]	[V]	[A]	
m200-P132M4	5.50	1465	400	11.1			8.70
m200-P132L4	7.50	1460	400	14.8			9.50
m200-P160M4	11.0	1470	400	22.0			8.10
m200-P160L4	15.0	1470	400	28.6			8.20
m200-P180M4	18.5	1460	400	34.1			7.70
m200-P180L4	22.0	1465	400	39.9			7.70
m200-P180V4 [3]	30.0	1475	400	55.3			8.00
m200-P200M4	30.0	1475	400	55.3			8.00
m200-P225M4	37.0	1485	400	68.9			7.50
m200-P225L4	45.0	1485	400	83.0			7.70

	M_N	M_a	M_b	cos ϕ	$\eta_{50\,\%}$	$\eta_{75\,\%}$	$\eta_{100\,\%}$	J [1]	m [1]
	[Nm]	[Nm]	[Nm]		[%]	[%]	[%]	[kgcm²]	[kg]
m200-P132M4	36.2	116	156	0.79	86.9	89.2	89.6	276	55.0
m200-P132L4	49.4	158	222	0.81	88.9	90.5	90.4	298	57.0
m200-P160M4	71.8	208	273	0.81	90.1	91.6	91.4	692	92.0
m200-P160L4	97.6	283	371	0.83	92.8	92.8	92.1	704	99.0
m200-P180M4	121	290	411	0.87	92.8	93.2	92.6	1122	126
m200-P180L4	143	372	501	0.87	92.7	93.2	93.0	1277	135
m200-P180V4 [3]	194	561	697	0.86	92.7	93.6	93.6	2645	183
m200-P200M4	194	561	697	0.86	92.7	93.6	93.6	2645	183
m200-P225M4	238	715	834	0.85	92.0	93.5	93.9	3643	260
m200-P225L4	290	871	1016	0.85	93.0	94.1	94.2	4351	280

[1] Without accessories
[2] Star/delta start-up possible at 400 V.
[3] This motor is intended for direct mounting to a gearbox and is not available in motor design B3 or B5.



Dimensions, self-ventilated (4-pole)

m200-P132

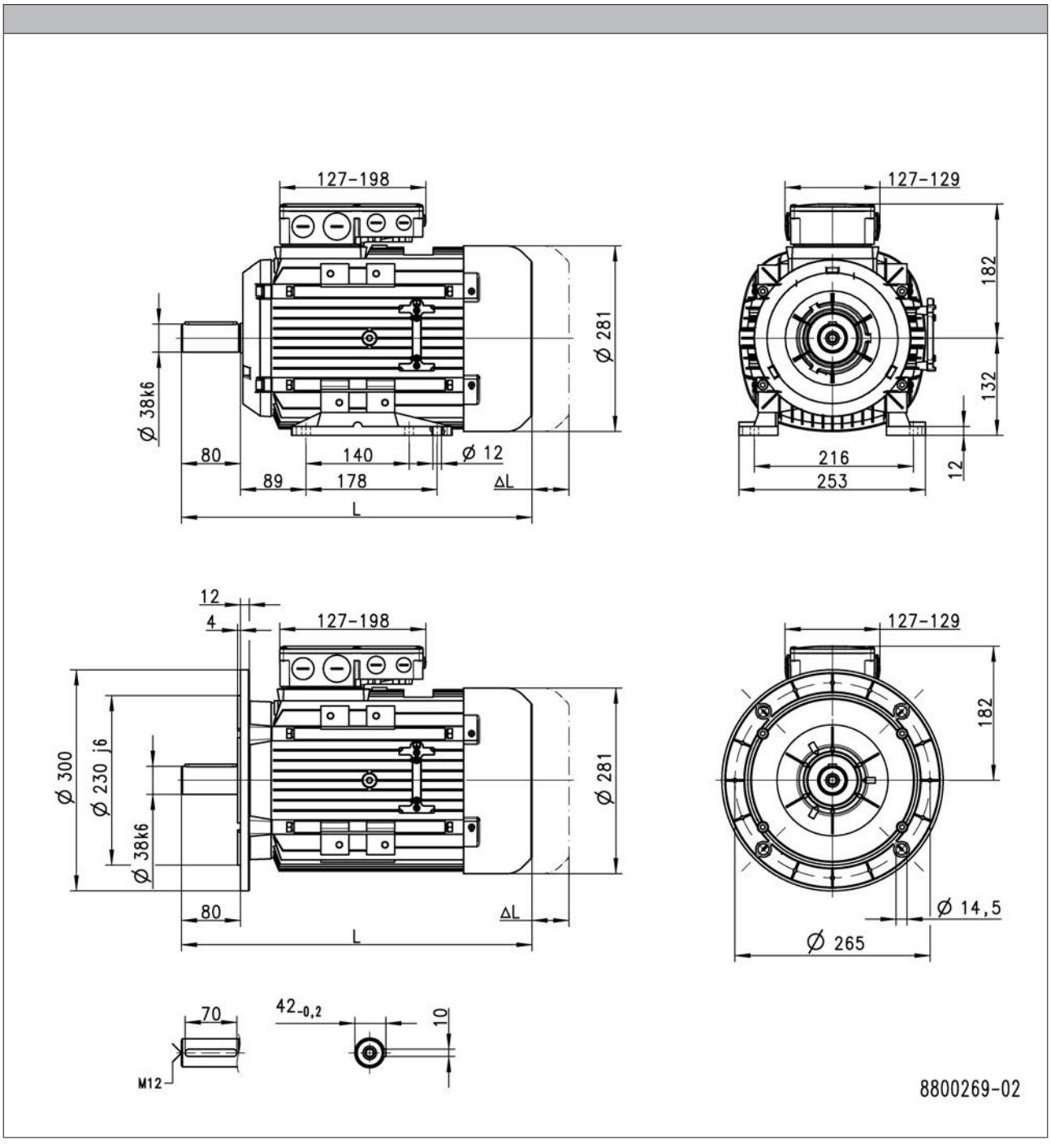

Product			m200-P132M4	m200-P132L4
Dimensions				
Motor length	L	[mm]	476	
Length of motor options	Δ L	[mm]	118	

L = length of the motor without built-on accessories
ΔL = additional length of the built-on accessories (with brake)



Dimensions, self-ventilated (4-pole)

m200-P160

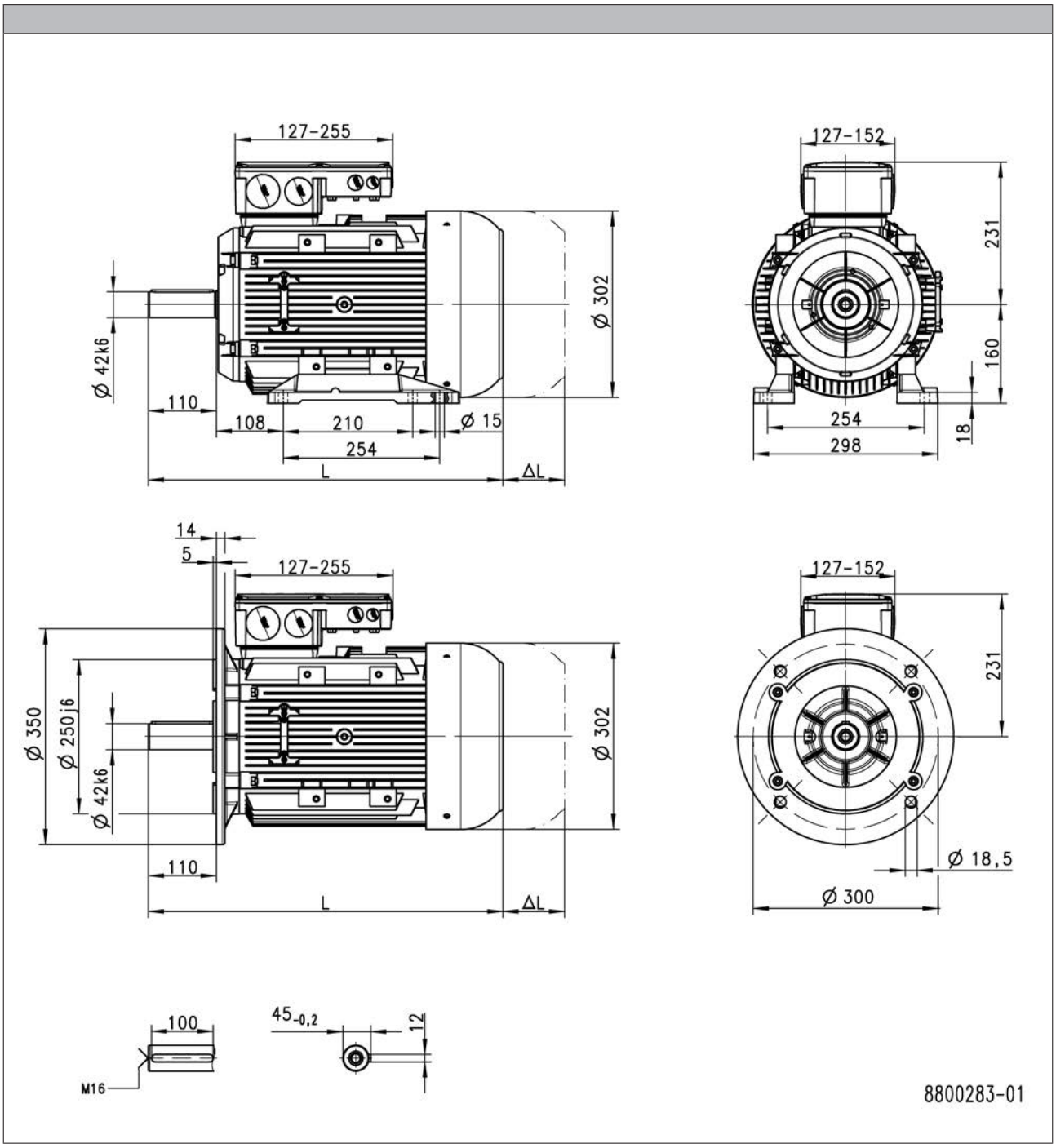

Product			m200-P160M4	m200-P160L4
Dimensions				
Motor length	L	[mm]	575	
Length of motor options	Δ L	[mm]	144	

L = length of the motor without built-on accessories
ΔL = additional length of the built-on accessories (with brake)



Dimensions, self-ventilated (4-pole)

m200-P180

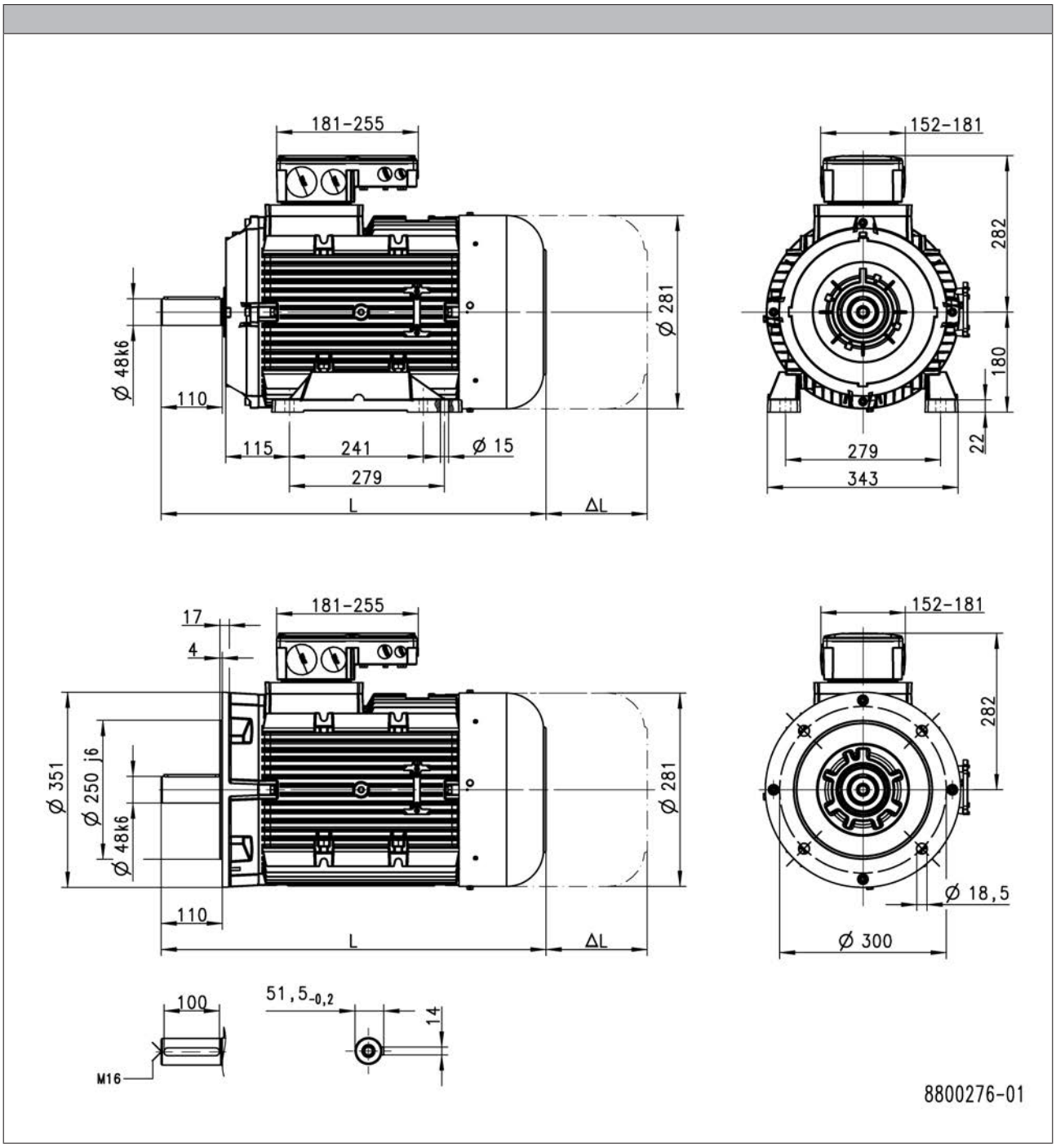

Product			m200-P180M4	m200-P180L4
Dimensions				
Motor length	L	[mm]	689	
Length of motor options	Δ L	[mm]	108	

L = length of the motor without built-on accessories
ΔL = additional length of the built-on accessories (with brake)



Dimensions, self-ventilated (4-pole)

m200-P200

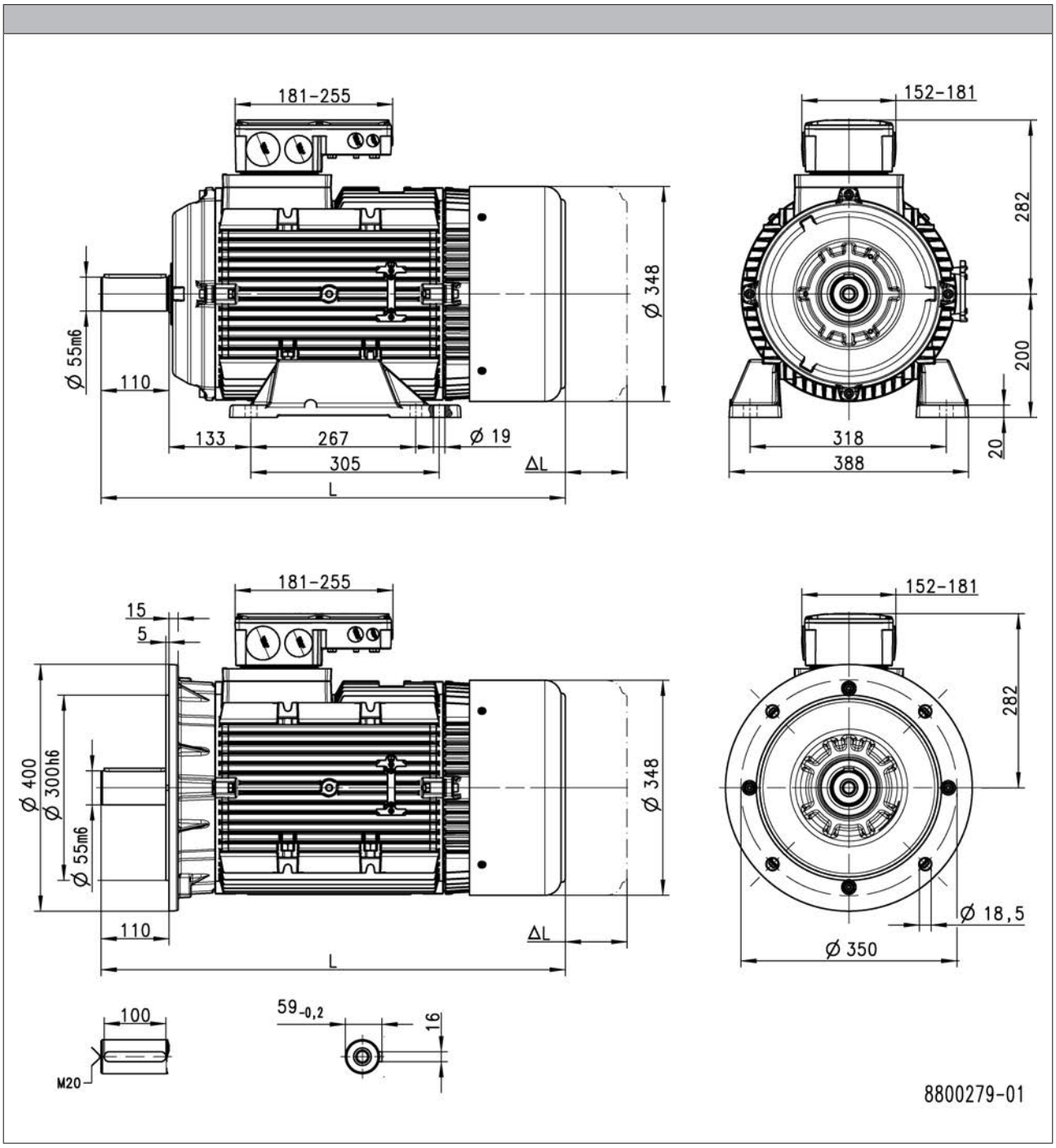

Product			m200-P200M4
Dimensions			
Motor length	L	[mm]	756
Length of motor options	Δ L	[mm]	113

L = length of the motor without built-on accessories
ΔL = additional length of the built-on accessories (with brake)



Dimensions, self-ventilated (4-pole)

m200-P225

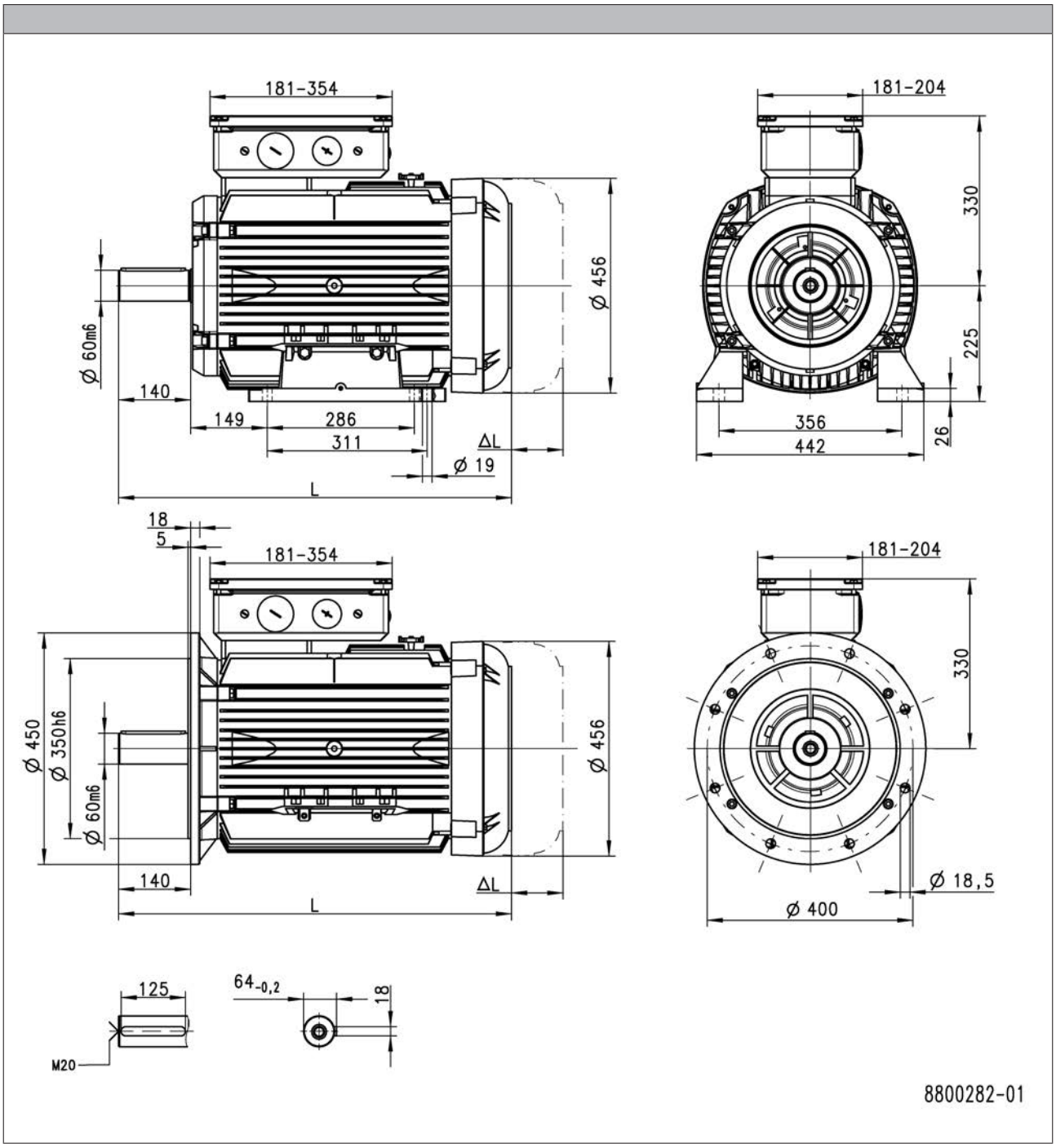

Product			m200-P225M4	m200-P225L4
Dimensions				
Motor length	L	[mm]	767	
Length of motor options	Δ L	[mm]	202	

L = length of the motor without built-on accessories
ΔL = additional length of the built-on accessories (with brake)





Surface and corrosion protection

For optimum protection of three-phase AC motors against ambient conditions, the surface and corrosion protection system (OKS) offers tailor-made solutions.

Various surface coatings ensure that the motors operate reliably even at high air humidity, in outdoor installation or in the presence of atmospheric impurities. Any colour from the RAL Classic collection can be chosen for the top coat. The three-phase AC motors are also available unpainted (no surface and corrosion protection).

Surface and corrosion protection system	Applications	Measures
OKS-G (primed)	• Dependent on subsequent top coat applied	• 2K PUR priming coat (grey)
OKS-S (small)	• Standard applications • Internal installation in heated buildings • Air humidity up to 90%	• Surface coating as per corrosivity category C1 (in line with EN 12944-2)
OKS-M (medium)	• Internal installation in non-heated buildings • Covered, protected external installation • Air humidity up to 95%	• Surface coating as per corrosivity category C2 (in line with EN 12944-2)
OKS-L (high)	• External installation • Air humidity above 95% • Chemical industry plants • Food industry	• Surface coating as per corrosivity category C3 (in line with EN 12944-2) • Blower cover and B end shield additionally primed • Screws zinc-coated • Cable glands with gaskets • Corrosion-resistant brake with cover ring, stainless friction plate, and chrome-plated armature plate (on request) Optional measures: • Motor recesses sealed off (on request)

Structure of surface coating

Surface and corrosion protection system	Corrosivity category	Surface coating	Colour
	DIN EN ISO 12944-2	Structure	
Without OKS (uncoated)			
OKS-G (primed)		2K PUR priming coat	
OKS-S (small)	Comparable to C1	2K-PUR top coat	Standard: RAL 7012 Optional: RAL Classic
OKS-M (medium)	Comparable to C2	2K PUR priming coat 2K-PUR top coat	
OKS-L (high)	Comparable to C3		



Motor connection

The m200 three-phase AC motors are destined for operation on the supply system. They are connected via a terminal box.

Connection via terminal box

The connection in the terminal box is implemented via conventional cable glands. Depending on the type of the built-on accessories, different terminal boxes are used.

The following combinations are distinguished:
- Motors without built-on accessories
- Motors with a spring-applied brake

Cable entries for motors without built-on accessories

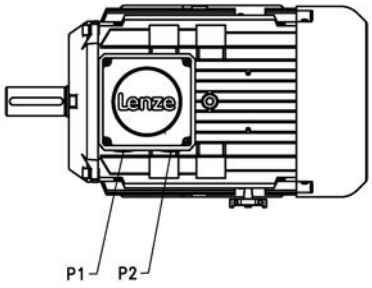

Product	Dimensions	
	P_1	P_2
	[mm]	[mm]
m200-P132M4	M32x1.5	M32x1.5
m200-P132L4		
m200-P160M4		
m200-P160L4		
m200-P180M4	M40x1.5	M40x1.5
m200-P180L4		
m200-P180V4		
m200-P200M4	M50x1.5	M50x1.5
m200-P225M4		
m200-P225L4		



Connection via terminal box

Cable entries for motors without built-on accessories

For IEC standard motors without built-on accessories, the position of the cable entry can be selected.

Position of the cable entry for IEC standard motors

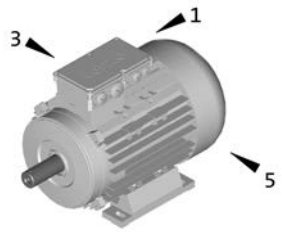

Possible cable entry position	1/3/5*

For geared motors without built-on accessories, the position of the cable entry must be selected as a function of the terminal box position.

Position of the cable entry for geared motors

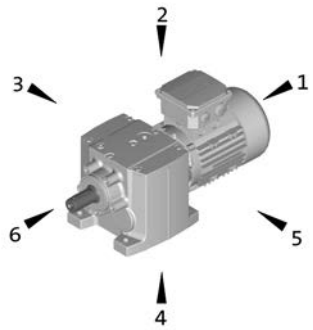

Terminal box position	2	3	4	5
Possible cable entry position	1/3/5*	1/2*/4	1/3*/5	1/2/4*

► If preferred positions are not specified in the order, the cable entry will be positioned as indicated by * on the diagram below.



Connection via terminal box

Cable entries for motors with built-on accessories

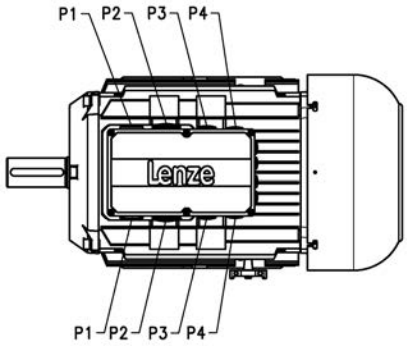

Product	Dimensions			
	P_1	P_2	P_3	P_4
	[mm]	[mm]	[mm]	[mm]
m200-P132M4	M25x1.5	M32x1.5	M20x1.5	M16x1.5
m200-P132L4				
m200-P160M4	M50x1.5	M40x1.5		
m200-P160L4				
m200-P180M4				
m200-P180L4				
m200-P180V4				
m200-P200M4				
m200-P225M4	M12x1.5	M63x1.5	M50x1.5	M12x1.5
m200-P225L4				





Spring-applied brake

The three-phase AC motors can be equipped with a spring-applied brake which is active when the supply voltage has been switched off (closed-circuit principle). In the deenergised state, the brake is applied. This prevents possible movement of the motor shaft with regard to the load after switch-off or in the event of a power failure.
For optimum adaptation of the brake motor to the application, several brake sizes and control variants are provided for each motor.

Types
- **Standard**
  - 1 x 10^6 repeating switching cycles
  - 1 x 10^6 reversing switching cycles

Control
- DC supply
- AC supply via rectifiers in the terminal box

Enclosure
- Without manual release IP55
- With manual release IP54

Friction lining
- Asbestos-free, low-wear

Options
- Manual release

Braking torques

In addition to the standard braking torque, depending on the brake size, the possibility of choosing between a reduced and an increased braking torque is provided.
- When the braking torque is reduced, great wear reserves can be attained. This is enabled by a reduction of the spring rate.
- In order to obtain a greater braking torque, the spring rate is increased. This is practical, for instance, for hoists, since here the gravity acts as an additional acceleration in the negative direction.

Manual release

By actuating the manual release lever, the brake can be released manually during operation at zero current. Manual release facilitates positioning and maintenance work.



Spring-applied brake

Direct connection without rectifier

If the brake is activated directly without a rectifier, a freewheeling diode or a spark suppressor is required for protection against induction peaks.

- Supply voltages
  DC 24 V

Connection via mains voltage with brake rectifier

If the brake is not directly supplied with DC voltage, a rectifier is required. This is included in the scope of supply and is located in the terminal box of the motor. The rectifier converts the AC voltage of the connection into DC voltage. The following rectifiers are available:

Half-wave rectifier, 6-pole

- Supply voltage / brake coil voltage ratio = 2.22
- Supply voltages
  AC 400 V

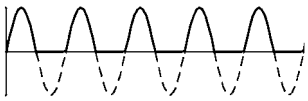

Bridge rectifier, 6-pole

- Ratio of supply voltage to brake coil voltage = 1.11
- Supply voltage
  AC 230 V





Spring-applied brake

Assignment of 4-pole motors and brakes

Product	Size	Rated torque
	Brake	
		M_k
		[Nm]
m200-P132M4	14 14 16 16	35.0 60.0 60.0 80.0
m200-P132L4	14 14 16 16 16	35.0 60.0 60.0 80.0 100
m200-P160M4	16 16 18 18	60.0 80.0 80.0 150
m200-P160L4	18 18 18	80.0 150 200
m200-P180M4	18 18 20 20	80.0 150 145 260
m200-P180L4	18 18 20 20 20	80.0 150 145 260 315
m200-P180V4	18 18 20 20 20 20	80.0 150 145 260 315 400
m200-P200M4	18 18 20 20 20 20	80.0 150 145 260 315 400
m200-P225M4	25 25 25	265 400 490
m200-P225L4	25 25 25 25	265 400 490 600



Spring-applied brake

Permissible friction energy

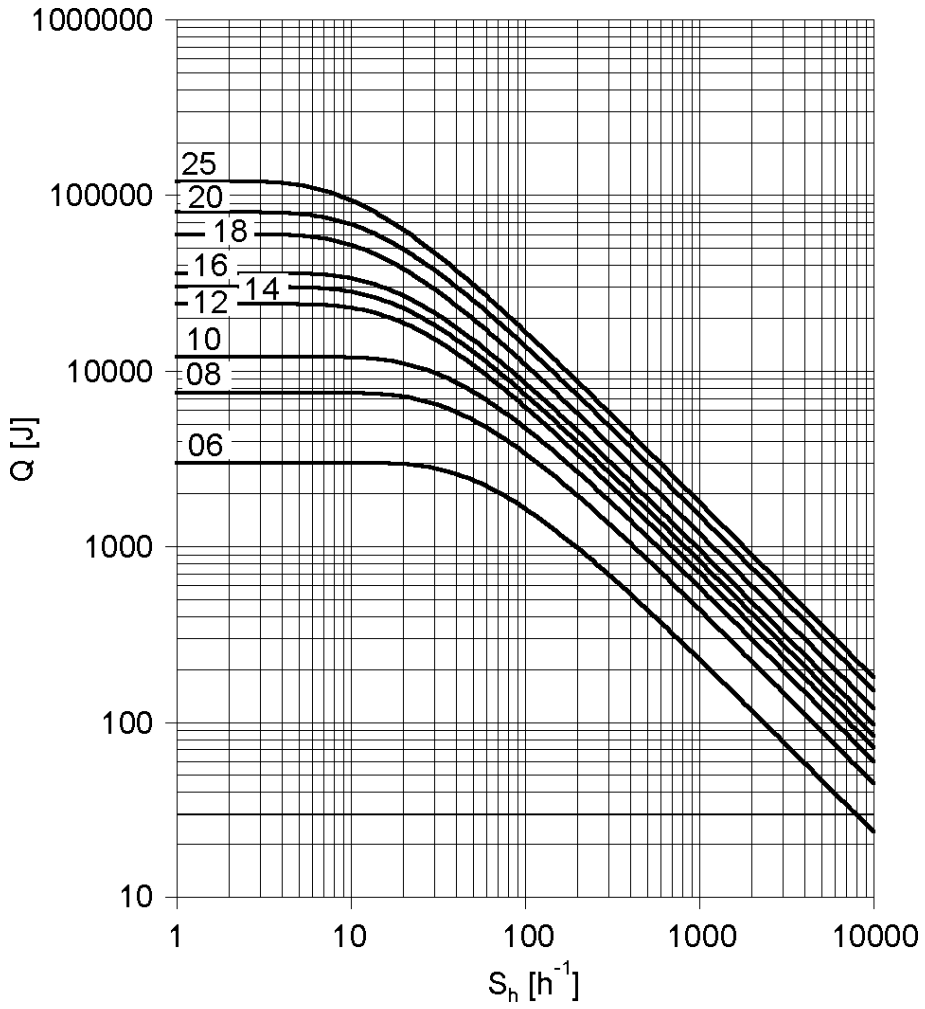

Q =Switching energy per switching cycle
S_h =Operating frequency
Brake size = 06 to 25



Spring-applied brake

Rated data with reduced braking torque

► Please enquire for braking torques and maximum switching work values not listed here.

Size			06	08	10	12	14	16	18	20	25
Power input											
	P_{in}	[kW]	0.020	0.025	0.030	0.040	0.050	0.055	0.085	0.10	0.11
Braking torque											
100	M_B	[Nm]	2.50	3.50	7.00	14.0	35.0	60.0	80.0	145	265
1000	M_B	[Nm]	2.30	3.10	6.10	12.0	30.0	50.0	65.0	115	203
1200	M_B	[Nm]	2.30	3.10	6.00	12.0	29.0	48.0	63.0	112	199
1500	M_B	[Nm]	2.20	3.00	5.80	11.0	28.0	47.0	61.0	109 [1)]	193 [1)]
1800	M_B	[Nm]	2.10	2.90	5.70	11.0	28.0	46.0	60.0 [1)]		
3000	M_B	[Nm]	2.00	2.80	5.30	10.0	26.0 [1)]	43.0 [1)]			
3600	M_B	[Nm]	2.00	2.70	5.20	10.0 [1)]					
Maximum switching energy											
100	Q_E	[KJ]	3.00	7.50	12.0	24.0	30.0	36.0	60.0	80.0	120
1000	Q_E	[KJ]	3.00	7.50	12.0	24.0	30.0	36.0	60.0	80.0	120
1200	Q_E	[KJ]	3.00	7.50	12.0	24.0	30.0	36.0	60.0	80.0	120
1500	Q_E	[KJ]	3.00	7.50	12.0	24.0	30.0	36.0	60.0	24.0 [1)]	36.0 [1)]
1800	Q_E	[KJ]	3.00	7.50	12.0	24.0	30.0	36.0	36.0 [1)]		
3000	Q_E	[KJ]	3.00	7.50	12.0	24.0	18.0 [1)]	11.0 [1)]			
3600	Q_E	[KJ]	3.00	7.50	12.0	7.00 [1)]					
Transition operating frequency											
	$S_{hü}$	[1/h]	79.0	50.0	40.0	30.0	28.0	27.0	20.0	19.0	15.0
Moment of inertia											
	J	[kgcm²]	0.015	0.061	0.20	0.45	0.63	1.50	2.90	7.30	20.0
Mass											
	m	[kg]	0.90	1.50	2.60	4.20	5.80	8.70	12.6	19.5	31.0

[1)] In the region of the load limit the value for friction energy Q_{BW} can be reduced to 40 %.



Spring-applied brake

Rated data with reduced braking torque

► Activation via half-wave or bridge rectifier

Size			06	08	10	12	14	16	18	20	25
Friction energy											
	Q_{BW}	[MJ]	113	210	264	706	761	966	1542	2322	3522
Delay time											
Engaging	t_{11}	[ms]	11.0	14.0	20.0	21.0	37.0	53.0	32.0	47.0	264
Rise time											
Braking torque	t_{12}	[ms]	13.0	10.0	17.0	19.0	22.0	30.0	20.0	100	120
Engagement time											
	t_1	[ms]	24.0		37.0	40.0	59.0	83.0	52.0	147	384
Disengagement time											
	t_2	[ms]	35.0	37.0	57.0	65.0	148	169	230	207	269

► The brake response and application times are guide values. The engagement time is 10 times longer with AC-side switching. With the maximum air gap the disengagement time t_2 – depending on the brake and control – is up to 4 times longer than the disengagement time with the rated air gap.



Spring-applied brake

Rated data with standard braking torque

► Please enquire for braking torques and maximum switching work values not listed here.

Size			06	08	10	12	14	16	18	20	25
Power input											
	P_{in}	[kW]	0.020	0.025	0.030	0.040	0.050	0.055	0.085	0.10	0.11
Braking torque											
100	M_B	[Nm]	4.00	8.00	16.0	32.0	60.0	80.0	150	260	400
1000	M_B	[Nm]	3.70	7.20	14.0	27.0	51.0	66.0	121	206	307
1200	M_B	[Nm]	3.60	7.00	14.0	27.0	50.0	65.0	118	201	300
1500	M_B	[Nm]	3.50	6.80	13.0	26.0	48.0	63.0	115	195 [1)]	291 [1)]
1800	M_B	[Nm]	3.40	6.70	13.0	26.0	47.0	61.0	112 [1)]		
3000	M_B	[Nm]	3.20	6.30	12.0	24.0	44.0 [1)]	57.0 [1)]			
3600	M_B	[Nm]	3.20	6.10	12.0	23.0 [1)]					
Maximum switching energy											
100	Q_E	[KJ]	3.00	7.50	12.0	24.0	30.0	36.0	60.0	80.0	120
1000	Q_E	[KJ]	3.00	7.50	12.0	24.0	30.0	36.0	60.0	80.0	120
1200	Q_E	[KJ]	3.00	7.50	12.0	24.0	30.0	36.0	60.0	80.0	120
1500	Q_E	[KJ]	3.00	7.50	12.0	24.0	30.0	36.0	60.0	24.0 [1)]	36.0 [1)]
1800	Q_E	[KJ]	3.00	7.50	12.0	24.0	30.0	36.0	36.0 [1)]		
3000	Q_E	[KJ]	3.00	7.50	12.0	24.0	18.0 [1)]	11.0 [1)]			
3600	Q_E	[KJ]	3.00	7.50	12.0	7.00 [1)]					
Transition operating frequency											
	$S_{hü}$	[1/h]	79.0	50.0	40.0	30.0	28.0	27.0	20.0	19.0	15.0
Moment of inertia											
	J	[kgcm²]	0.015	0.061	0.20	0.45	0.63	1.50	2.90	7.30	20.0
Mass											
	m	[kg]	0.90	1.50	2.60	4.20	5.80	8.70	12.6	19.5	31.0

[1)] In the region of the load limit the value for friction energy Q_{BW} can be reduced to 40 %.



Spring-applied brake

Rated data with standard braking torque

► Activation via half-wave or bridge rectifier

Size			06	08	10	12	14	16	18	20	25
Friction energy											
	Q_{BW}	[MJ]	85.0	158	264	530	571	966	1542	2322	3522
Delay time											
Engaging	t_{11}	[ms]	15.0		28.0		17.0	27.0	33.0	65.0	110
Rise time											
Braking torque	t_{12}	[ms]	13.0	16.0	19.0	25.0		30.0	45.0	100	120
Engagement time											
	t_1	[ms]	28.0	31.0	47.0	53.0	42.0	57.0	78.0	165	230
Disengagement time											
	t_2	[ms]	45.0	57.0	76.0	115	210	220	270	340	390

► The brake response and application times are guide values. The engagement time is 10 times longer with AC-side switching. With the maximum air gap the disengagement time t_2 – depending on the brake and control – is up to 4 times longer than the disengagement time with the rated air gap.



Spring-applied brake

Rated data with increased braking torque

► Please enquire for braking torques and maximum switching work values not listed here.

Size			10	12	14	16	16	18	20	20	25	25
Power input												
	P_{in}	[kW]	0.030	0.040	0.050	0.055	0.055	0.085	0.10	0.10	0.11	0.11
Braking torque												
100	M_B	[Nm]	23.0	46.0	75.0	100	125	200	315	400	490	600
1000	M_B	[Nm]	20.0	39.0	64.0	83.0	103	162	249	317	376	461
1200	M_B	[Nm]	20.0	39.0	62.0	81.0	101	158	244	309	367	449
1500	M_B	[Nm]	19.0	38.0	60.0	78.0	98.0	153	237 [1]	300 [1]	356 [1]	436 [1]
1800	M_B	[Nm]	19.0	37.0	59.0	77.0	96.0	150 [1]				
3000	M_B	[Nm]	17.0	34.0	55.0 [1]	71.0 [1]	89.0 [1]					
3600	M_B	[Nm]	17.0	33.0 [1]								
Maximum switching energy												
100	Q_E	[KJ]	12.0	24.0	30.0	36.0	36.0	60.0	80.0	80.0	120	120
1000	Q_E	[KJ]	12.0	24.0	30.0	36.0	36.0	60.0	80.0	80.0	120	120
1200	Q_E	[KJ]	12.0	24.0	30.0	36.0	36.0	60.0	80.0	80.0	120	120
1500	Q_E	[KJ]	12.0	24.0	30.0	36.0	36.0	60.0	24.0 [1]	24.0 [1]	36.0 [1]	36.0 [1]
1800	Q_E	[KJ]	12.0	24.0	30.0	36.0	36.0	36.0 [1]				
3000	Q_E	[KJ]	12.0	24.0	18.0 [1]	11.0 [1]	11.0 [1]					
3600	Q_E	[KJ]	12.0	7.00 [1]								
Transition operating frequency												
	$S_{hü}$	[1/h]	40.0	30.0	28.0	27.0	27.0	20.0	19.0	19.0	15.0	15.0
Moment of inertia												
	J	[kgcm²]	0.20	0.45	0.63	1.50	1.50	2.90	7.30	7.30	20.0	20.0
Mass												
	m	[kg]	2.60	4.20	5.80	8.70	8.70	12.6	19.5	19.5	31.0	31.0

[1] In the region of the load limit the value for friction energy Q_{BW} can be reduced to 40 %.

► Activation via half-wave or bridge rectifier

Size			10	12	14	16		18	20		25	
Friction energy												
	Q_{BW}	[MJ]	198	353	253	563	241	578	1596	580	2465	1409
Delay time												
Engaging	t_{11}	[ms]	10.0	16.0	11.0	22.0	17.0	24.0	46.0	17.0	77.0	38.0
Rise time												
Braking torque	t_{12}	[ms]	19.0	25.0		30.0		45.0	100		120	
Engagement time												
	t_1	[ms]	29.0	41.0	36.0	52.0	47.0	69.0	146	117	197	158
Disengagement time												
	t_2	[ms]	109	193	308	297	435	356	378	470	451	532



Spring-applied brake

Manual release

By actuating the manual release lever, the brake can be released manually during operation at zero current. Manual release facilitates positioning and maintenance work.

Manual release lever for IEC motors

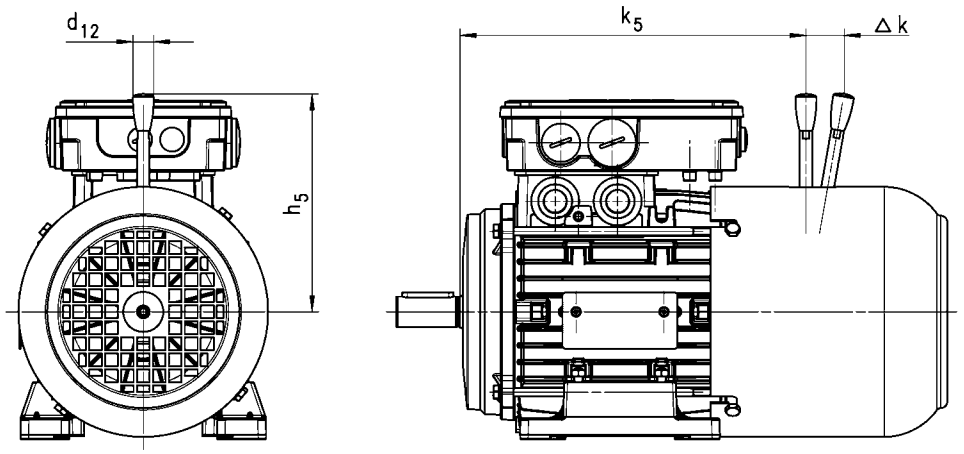

	Size	Dimensions			
	Brake				
		k_5	Δ k	h_5	d_{12}
		[mm]	[mm]	[mm]	[mm]
m200-P132M4	14 16	405 407	41 55	195 240	24.0 24.0
m200-P132L4	14 16	405 407	41 55	195 240	24.0 24.0
m200-P160M4	16 18	479 484	55 59	240 279	24.0 24.0
m200-P160L4	18	484	59	279	24.0
m200-P180M4	18 20	552 559	59 74	279 319	24.0 24.0
m200-P180L4	18 20	552 559	59 74	279 319	24.0 24.0
m200-P200M4	18 20	620 626	59 74	279 319	24.0 24.0
m200-P225M4	25	650	103	445	24.0
m200-P225L4	25	650	103	445	24.0



Spring-applied brake

Manual release

Manual release lever for geared motors

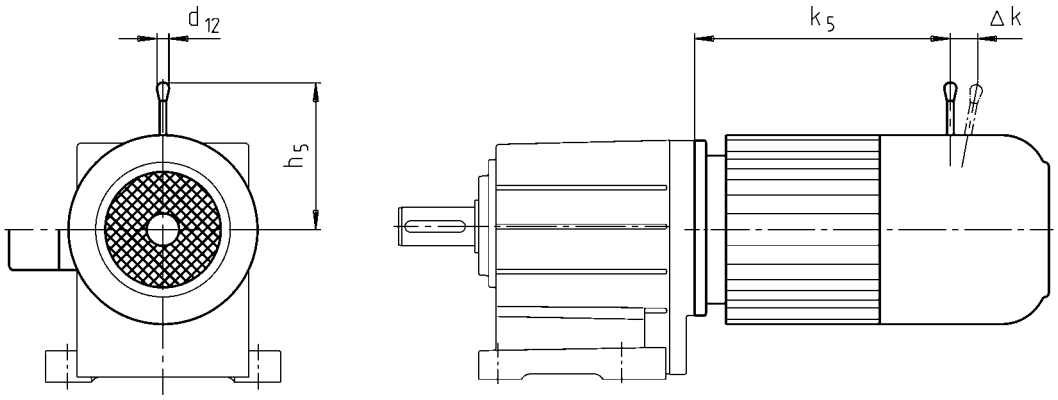

	Size	Dimensions			
	Brake				
		k_5	Δ k	h_5	d_{12}
		[mm]	[mm]	[mm]	[mm]
m200-P132M4	14 16	403 406	41 55	195 240	24.0 24.0
m200-P132L4	14 16	403 406	41 55	195 240	24.0 24.0
m200-P160M4	16 18	512 517	55 59	240 279	24.0 24.0
m200-P160L4	18	517	59	279	24.0
m200-P180M4	18 20	574 581	59 74	279 319	24.0 24.0
m200-P180L4	18 20	574 581	59 74	279 319	24.0 24.0
m200-P180V4	18 20	624 630	59 74	279 319	24.0 24.0
m200-P225M4	25	704	103	445	24.0
m200-P225L4	25	704	103	445	24.0



Temperature monitoring

To protect the motor against overheating, the following thermal sensors are provided.
The thermal sensors are integrated into the windings. We recommend using an additional motor protection switch.

TKO thermal contacts

The TCO thermal contact (thermal NC contact) is a bimetallic-element switch. The TCO monitors the motor winding temperature; at too high temperatures, the motor relay switches. The motor is disconnected from the mains.

Function	Operating temperature	Min. reset temperature	Max. reset temperature	Max. input current	Max. input voltage
					AC
	T	T_{min}	T_{max}	$I_{in,max}$	$U_{in,max}$
	-5 ... 5				
	[°C]	[°C]	[°C]	[A]	[V]
NC contact	150	90.0	135	2.50	250

PTC thermistor

The PTC thermistor is actuated in connection with a tripping unit. If the motor gets too hot, the motor can be switched off by means of a contactor. In contrast to the thermal contact, quick restart is possible.

Function	Operating temperature	Rated resistance			Standard
		155 °C	-20 °C	140 °C	
	T	R_N	R_N	R_N	
	-5 ... 5				
	[°C]	[Ω]	[Ω]	[Ω]	
Sudden change in resistance	150	550	30.0	250	DIN 44080 DIN VDE 0660 Part 303







13478279

Lenze SE
Hans-Lenze-Straße 1
D-31855 Aerzen
Phone: +49 (0)5154 82-0
Telefax: +49 (0)5154 82 28 00

www.Lenze.com