L-force catalogue

Automation systems
Drive solutions

Controls
Inverter
Motors
Gearboxes
Engineering Tools

Motors: IE3 three-phase AC motors m500

Gearboxes: GST helical gearboxes, GFL shaft-mounted helical gearbox, GKS helical-bevel gearbox

Lenze
As easy as that.

Contents of the L-force catalogue

About Lenze		Lenze makes many things easy for you.	
		A matter of principle: the right products for every application.	
		L-force product portfolio	
Automation systems		Controller-based Automation	1.1
		Drive-based automation	1.2
Drive solutions		HighLine tasks	2.1
		StateLine tasks	2.2
		BaseLine tasks	2.3
Controls	Visualisation	Panel PC v800	3.1
		Monitor v200	3.2
	Cabinet Controllers	Controller 3200 C	3.3
		Controller c300	3.4
	Panel Controllers	Controller p500	3.5
		Controller p300	3.6
	'	I/O System 1000	3.7
Inverter	Decentralised	Inverter Drives 8400 protec	4.1
		Inverter Drives 8400 motec	4.2
	Cabinet	Servo Drives 9400 HighLine	4.3
		Inverter Drives 8400 TopLine	4.4
		Servo-Inverter i700	4.5
		Inverter Drives 8400 HighLine	4.6
		Inverter Drives 8400 StateLine	4.7
		Inverter Drives 8400 BaseLine	4.8
Motors	Servo motors	MCS synchronous servo motors	5.1
		MD□KS synchronous servo motors	5.2
		MQA asynchronous servo motors	5.3
		MCA asynchronous servo motors	5.4
	Three-phase AC motors	IE3 three-phase AC motors m500	5.5
		Inverter opt. three-phase AC motors MF	5.6
		IE2 MH three-phase AC motors	5.7
		IE1 MD three-phase AC motors	5.8
		Lenze Smart Motor m300	5.9
		IE3 three-phase AC motors m200	5.10
		IE1/2 three-phase AC motors Basic MD/MH	5.11
Gearboxes	Axial gearboxes	GST helical gearboxes	6.1
		GFL shaft-mounted helical gearbox	6.2
	Right-angle gearboxes	GKR bevel gearboxes	6.3
		GKS helical-bevel gearbox	6.4
		GSS helical-worm gearboxes	6.5
	Motor data	Assignment see above	6.6
Engineering Tools		Navigator	7.1
		Drive Solution Designer	7.2
		Drive Solution Catalogue	7.3
		Engineer	7.4
		PLC Designer	7.5
		VisiWinNET®	7.6
		EASY Starter	7.7

Selected portfolio

Additional portfolio

Lenze makes many things easy for you.

With our motivated and committed approach, we work together with you to create the best possible solution and set your ideas in motion - whether you are looking to optimise an existing machine or develop a new one. We always strive to make things easy and seek perfection therein. This is anchored in our thinking, in our services and in every detail of our products. It's as easy as that!

1

Developing ideas

Are you looking to build the best machine possible and already have some initial ideas? Then get these down on paper together with us, starting with small innovative details and stretching all the way to completely new machines. Working together, we will develop an intelligent and sustainable concept that is perfectly aligned with your specific requirements.

2

Drafting concepts

We see welcome challenges in your machine tasks, supporting you with our comprehensive expertise and providing valuable impetus for your innovations. We take a holistic view of the individual motion and control functions here and draw up consistent, end-to-end drive and automation solutions for you - keeping everything as easy as possible and as extensive as necessary.

3

Implementing solutions

Our easy formula for satisfied customers is to establish an active partnership with fast decision making processes and an individually tailored offer. We have been using this principle to meet the ever more specialised customer requirements in the field of machine engineering for many years.

4

Manufacturing machines

Functional diversity in perfect harmony: as one of the few full-range providers in the market, we can provide you with precisely those products that you actually need for any machine task – no more and no less. Our L-force product portfolio, a consistent platform for implementing drive and automation tasks, is invaluable in this regard.

5

Ensuring productivity

Productivity, reliability and new performance peaks on a daily basis – these are our key success factors for your machine. After delivery, we offer you cleverly devised service concepts to ensure continued safe operation. The primary focus here is on technical support, based on the excellent application expertise of our highly-skilled and knowledgeable after-sales team.

A matter of principle: the right products for every application.

Lenze's extensive L-force product portfolio follows a very simple principle. The functions of our finely scaled products are assigned to the three lines Base-Line, State-Line or High-Line.

But what does this mean for you? It allows you to quickly recognise which products represent the best solution for your own specific requirements.

Powerful products with a major impact:
- Easy handling
- High quality and durability
- Reliable technologies in tune with the latest developments

Lenze products undergo the most stringent testing in our own laboratory. This allows us to ensure that you will receive consistently high quality and a long service life. In addition to this, five logistics centres ensure that the Lenze products you select are available for quick delivery anywhere across the globe. It's as easy as that!

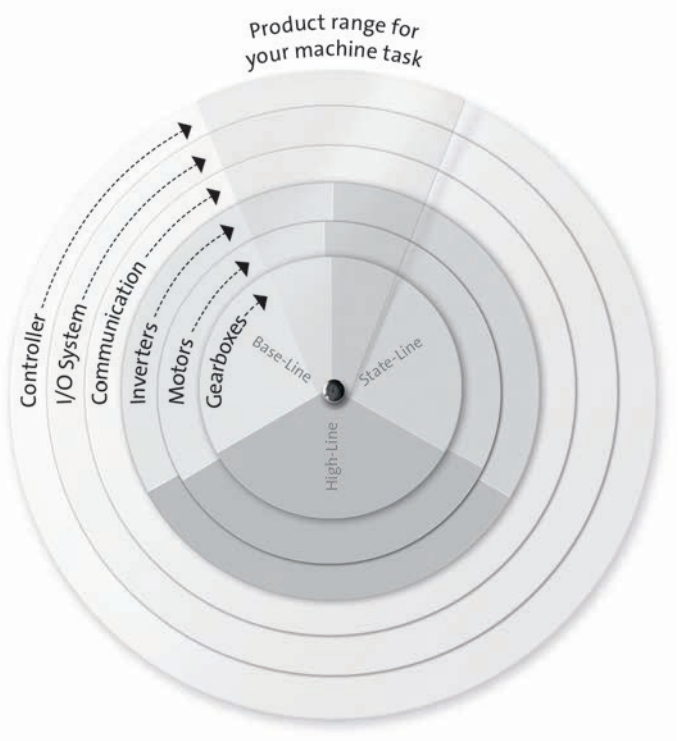

L-force product portfolio

Controls

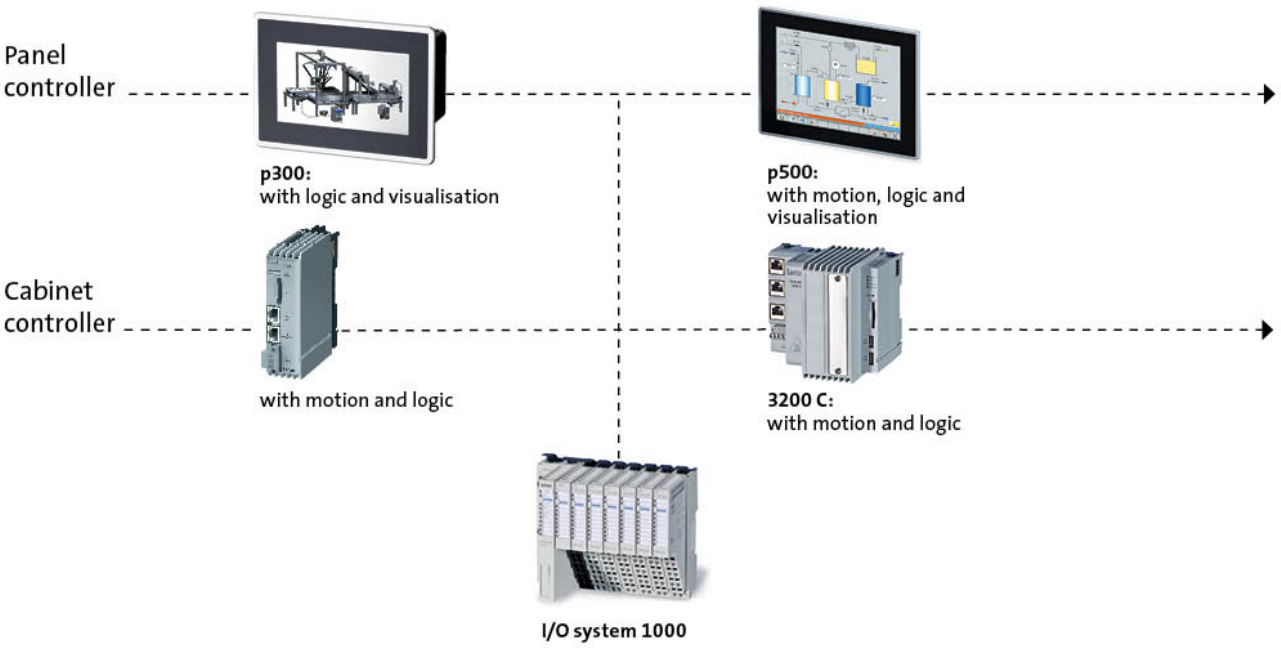

Engineering Tools

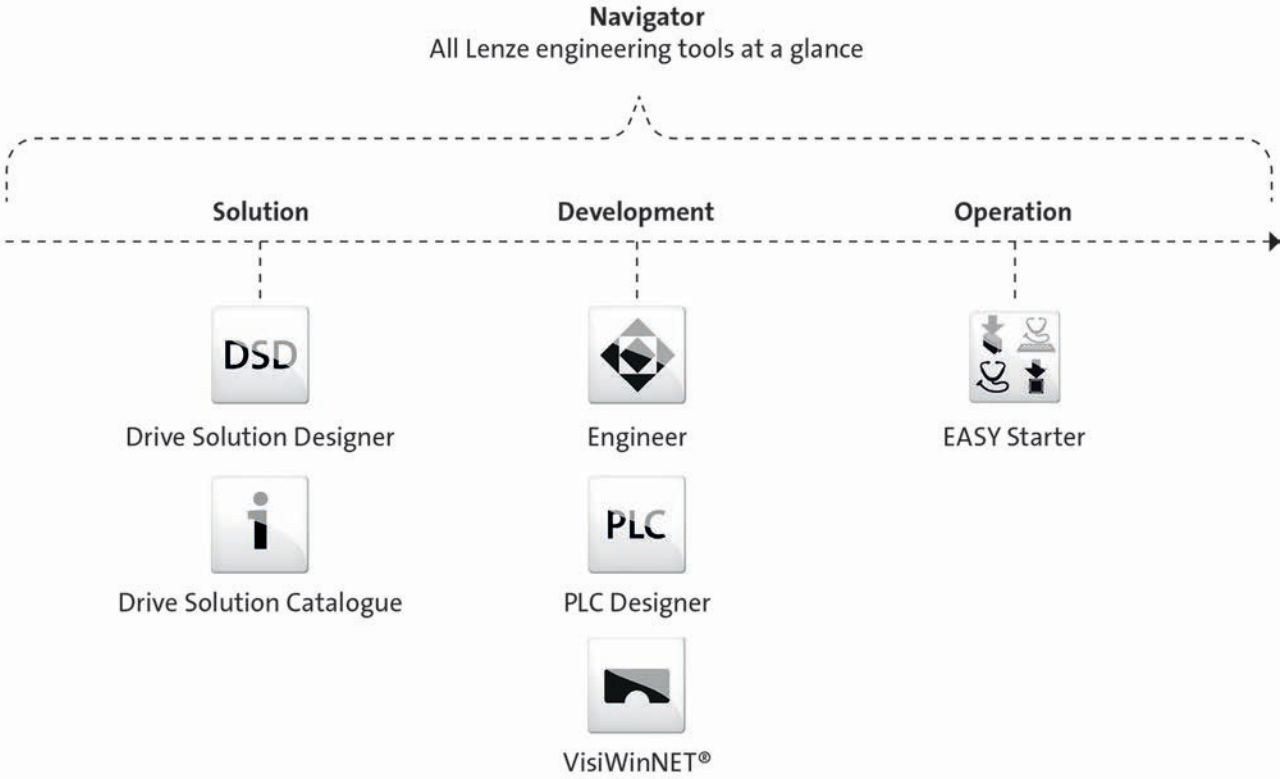

L-force product portfolio

Inverter

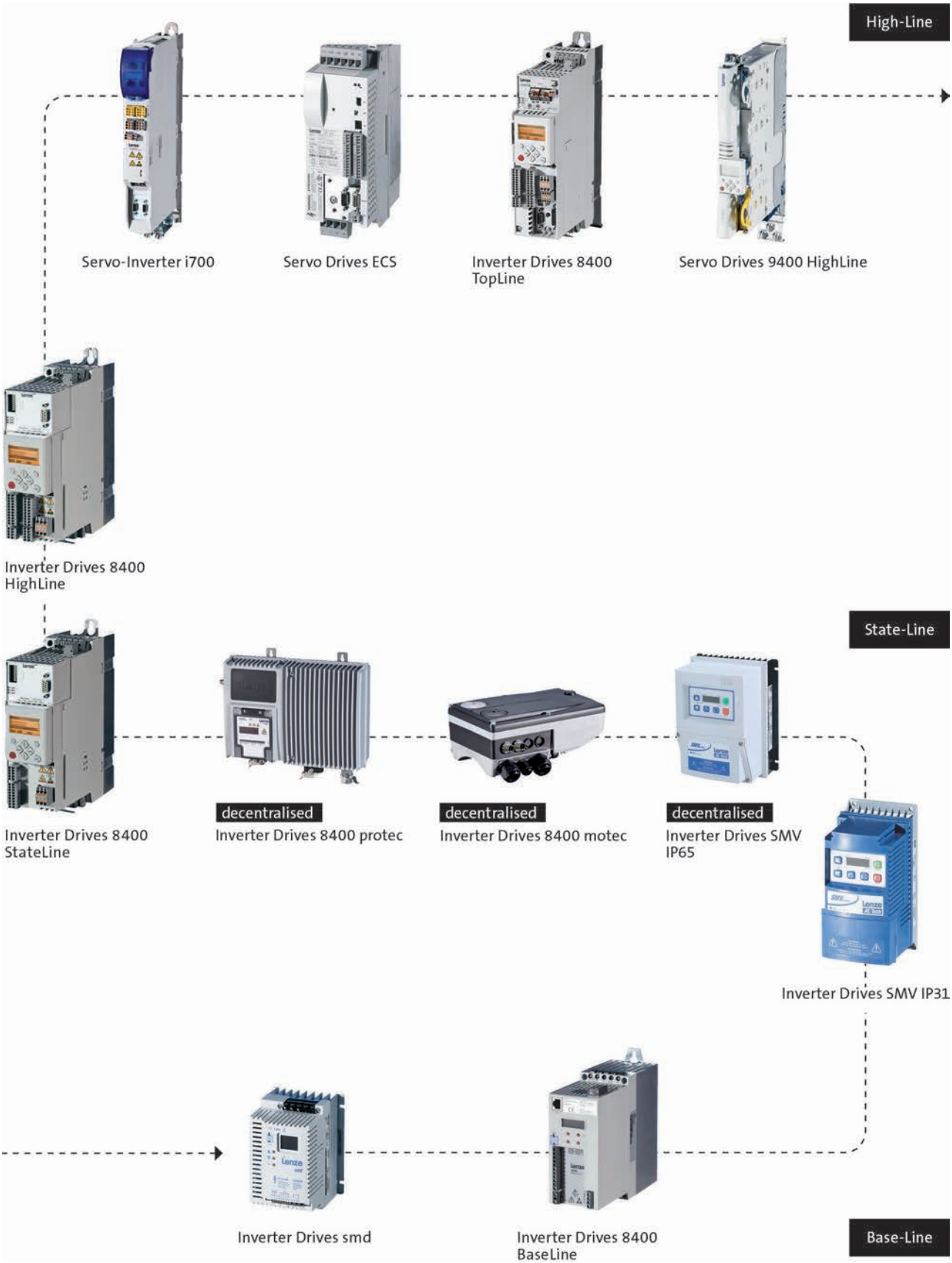

L-force product portfolio

Motors

High-Line

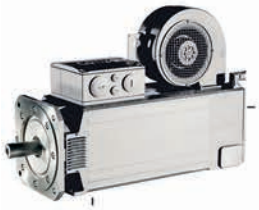

MQA asynchronous servo motors



SDSGS synchronous servo motors



MDXKS synchronous servo motors



Synchronous servo motors MCS



Asynchronous servo motors MCA



Asynchronous servo motors SDSGA

State-Line



MF three-phase AC motors



MH three-phase AC motors



MD three-phase AC motors



Basic MD/MH three-phase AC motors

Base-Line

L-force product portfolio

Gearboxes

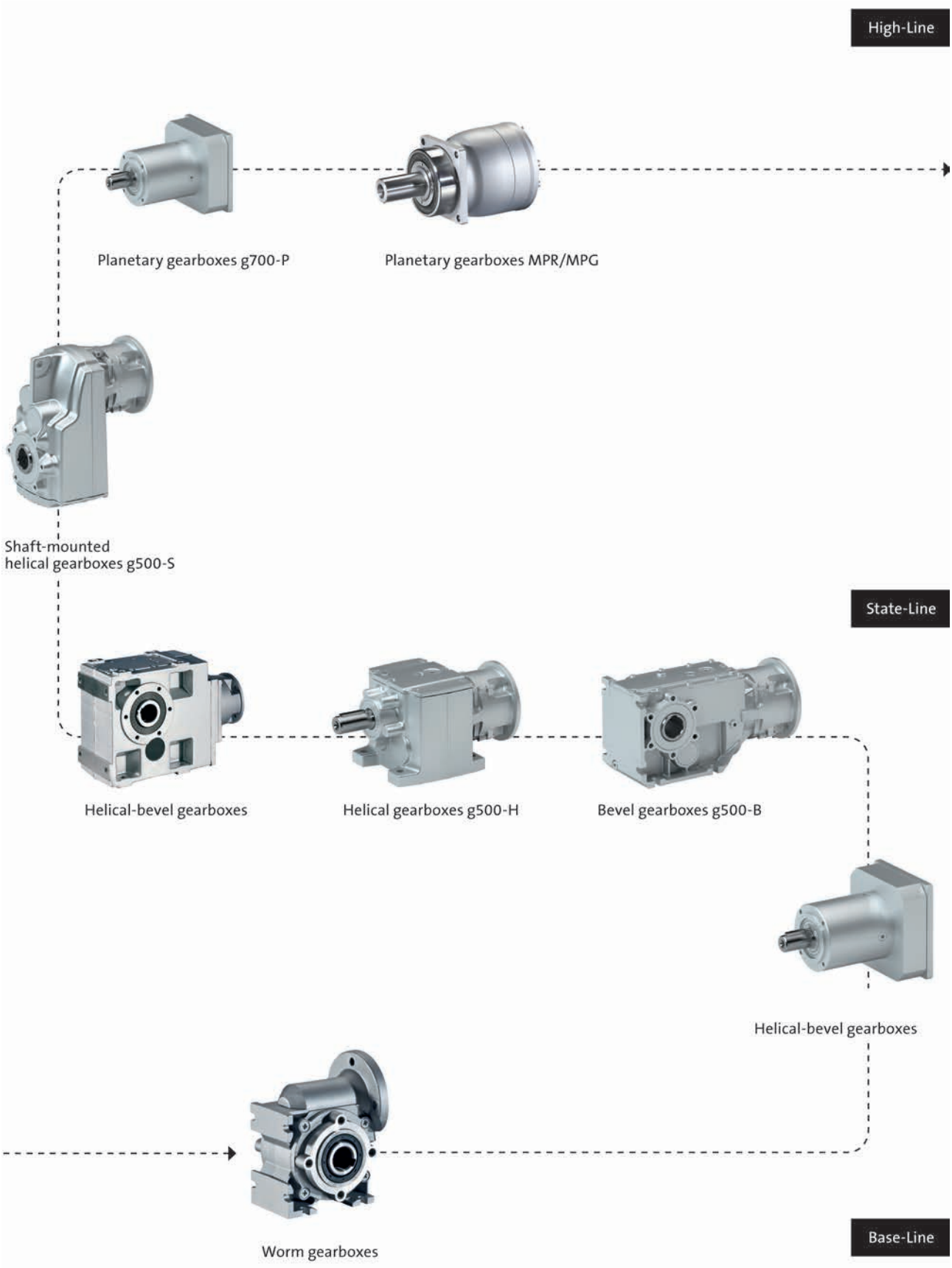

GST helical gear-boxes

Inverter operation
5.5 ... 45 kW (efficiency class IE3)

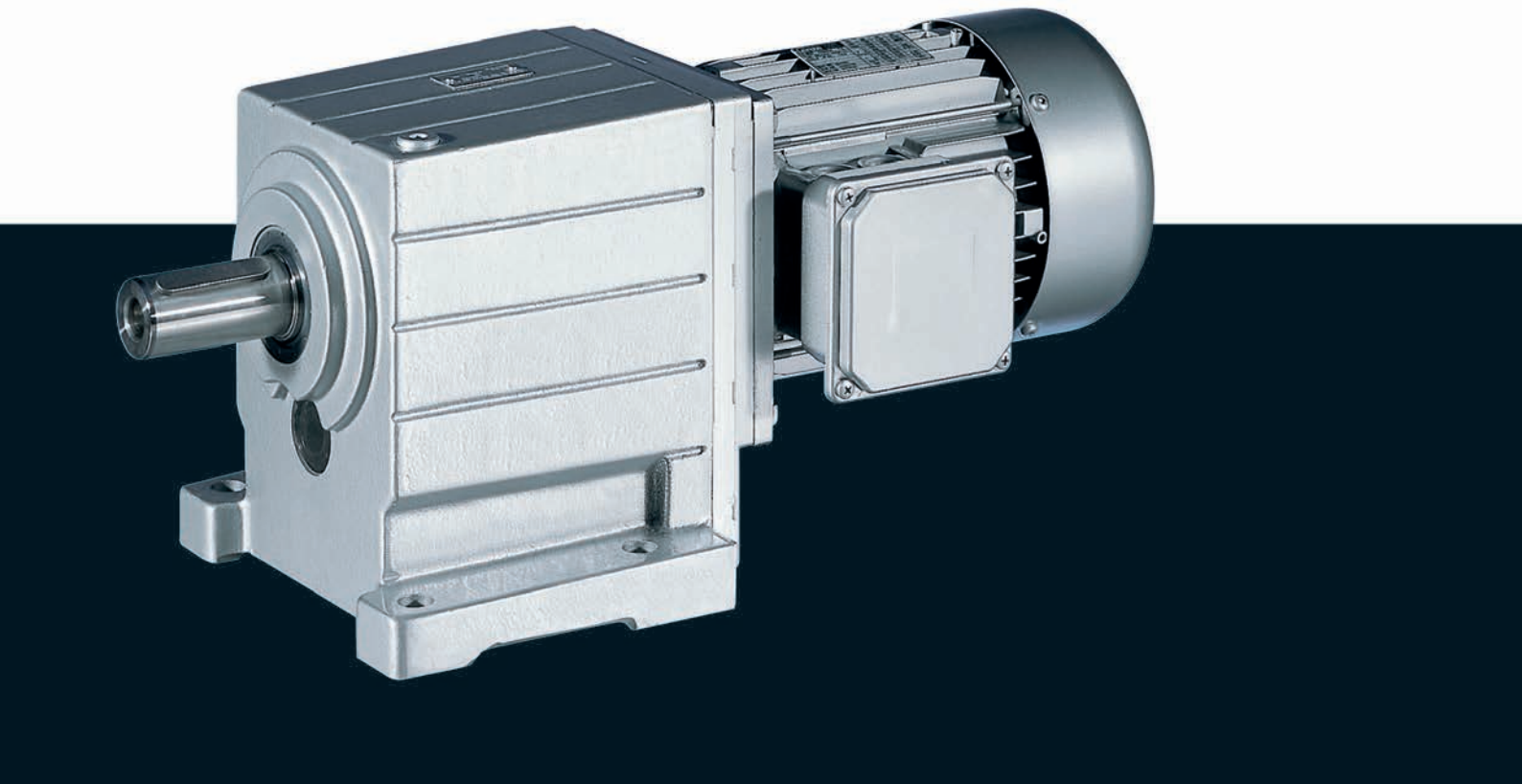

GST helical gearboxes



Contents

General information	List of abbreviations	6.1 - 4
	Product key	6.1 - 5
	Product information	6.1 - 7
	Functions and features	6.1 - 8
	Dimensioning	6.1 - 13
	Notes on ordering	6.1 - 18
	Ordering details checklist	6.1 - 19
Technical data	Permissible radial and axial forces at output	6.1 - 23
	Output backlash in angular minutes	6.1 - 27
	Moments of inertia	6.1 - 29
	Weights, 4-pole motors	6.1 - 36
	Additional weights for gearboxes	6.1 - 37
	Selection tables, 4-pole motors	6.1 - 38
	Dimensions, 4-pole motors	6.1 - 54
Accessories	GST□□-2/3M VAR	6.1 - 87
	GST□□-2/3M VAL	6.1 - 88
	Ventilations	6.1 - 89



List of abbreviations

$\eta_{c=1}$		Efficiency
c		Load capacity
f_N	[Hz]	Rated frequency
$F_{ax,max}$	[N]	Max. axial force
$F_{rad,max}$	[N]	Max. radial force
H_{max}	[m]	Site altitude
i		Ratio
J	[kgcm²]	Moment of inertia
m	[kg]	Mass
M_2	[Nm]	Output torque
n_2	[r/min]	Output speed
n_N	[r/min]	Rated speed
P_N	[kW]	Rated power
$S_{hü}$	[1/h]	Transition operating frequency
$T_{opr,max}$	[°C]	Max. ambient operating temperature
$T_{opr,min}$	[°C]	Min. ambient operating temperature
$U_{N,\Delta}$	[V]	Rated voltage
$U_{N,Y}$	[V]	Rated voltage

CE	Communauté Européenne
CSA	Canadian Standards Association
DIN	Deutsches Institut für Normung e.V.
EMC	Electromagnetic compatibility
EN	European standard
IEC	International Electrotechnical Commission
IM	International Mounting Code
IP	International Protection Code
NEMA	National Electrical Manufacturers Association
UL	Underwriters Laboratory Listed Product
UR	Underwriters Laboratory Recognized Product
VDE	Verband deutscher Elektrotechniker (Association of German Electrical Engineers)
CCC	China Compulsory Certificate
GOST	Certificate for Russian Federation
cURus	Combined certification marks of UL for the USA and Canada
UkrSEPRO	Certificate for Ukraine



Product key

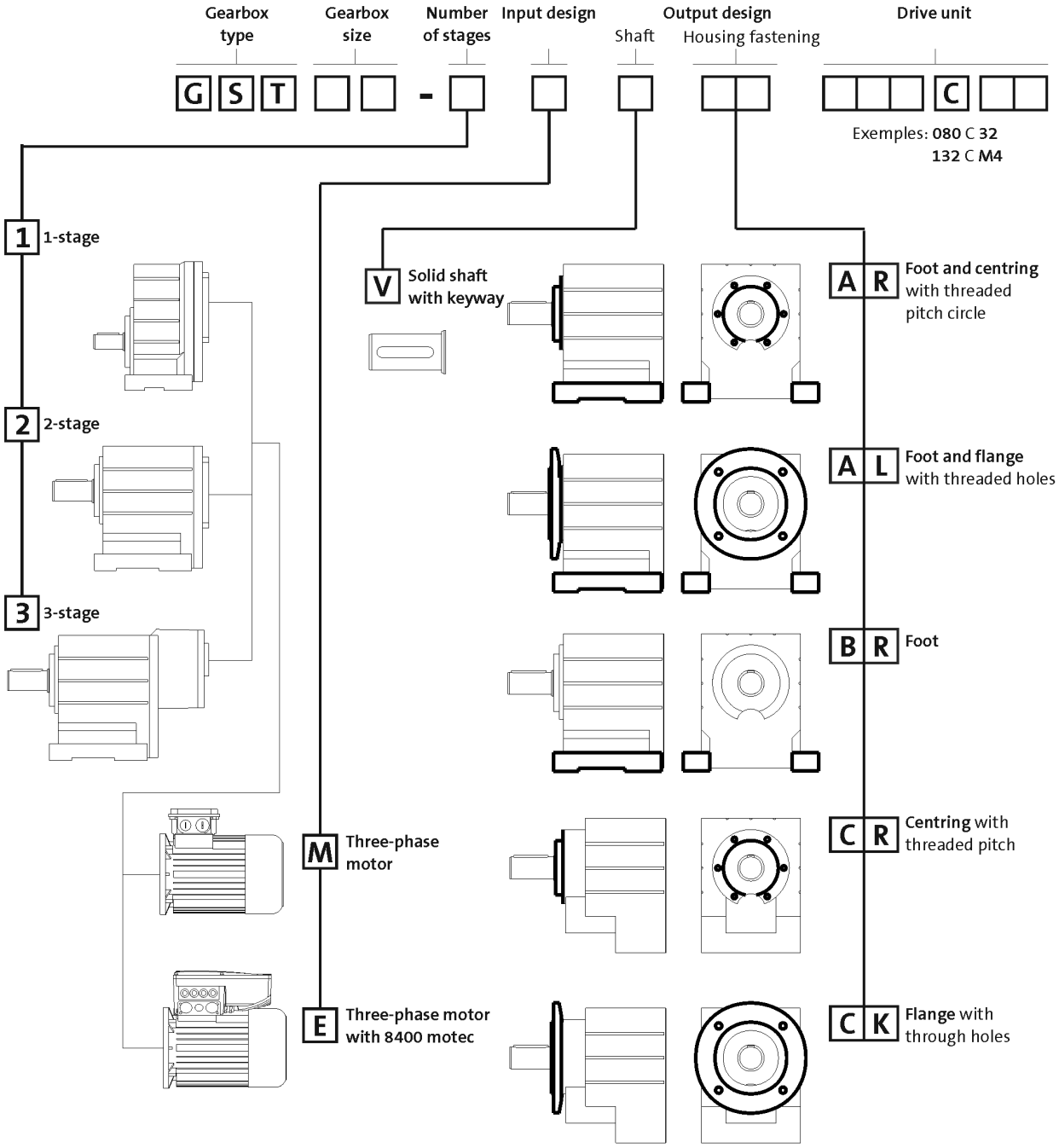

	Output design		
	V	K	L
	d x l [mm]	Øa2 [mm]	Øa2 [mm]
GST03-2	14x28	120/140/160	
	20x40	120/140/160	
GST04-1	16x32	120/140/160	
GST04-2	20x40	120/140/160	120/140
GST05-1	20x40	120/140/160/200	
GST05-2/3	25x50	120/140/160/200	120/140/160
GST06-1	25x50	160/200	

	Output design		
	V	K	L
	d x l [mm]	Øa2 [mm]	Øa2 [mm]
GST06-2/3	30x60	160/200	160/200
GST07-1	30x60	200/250	
GST07-2/3	40x80	200/250	200/250
GST09-1	40x80	250/300	
GST09-2/3	50x100	250/300	250/300
GST11-2/3	60x120	300/350	300/350
GST14-2/3	80x160	350/400	350/400



Product key

Mounting position (A to F) and position of system blocks (1 to 6)

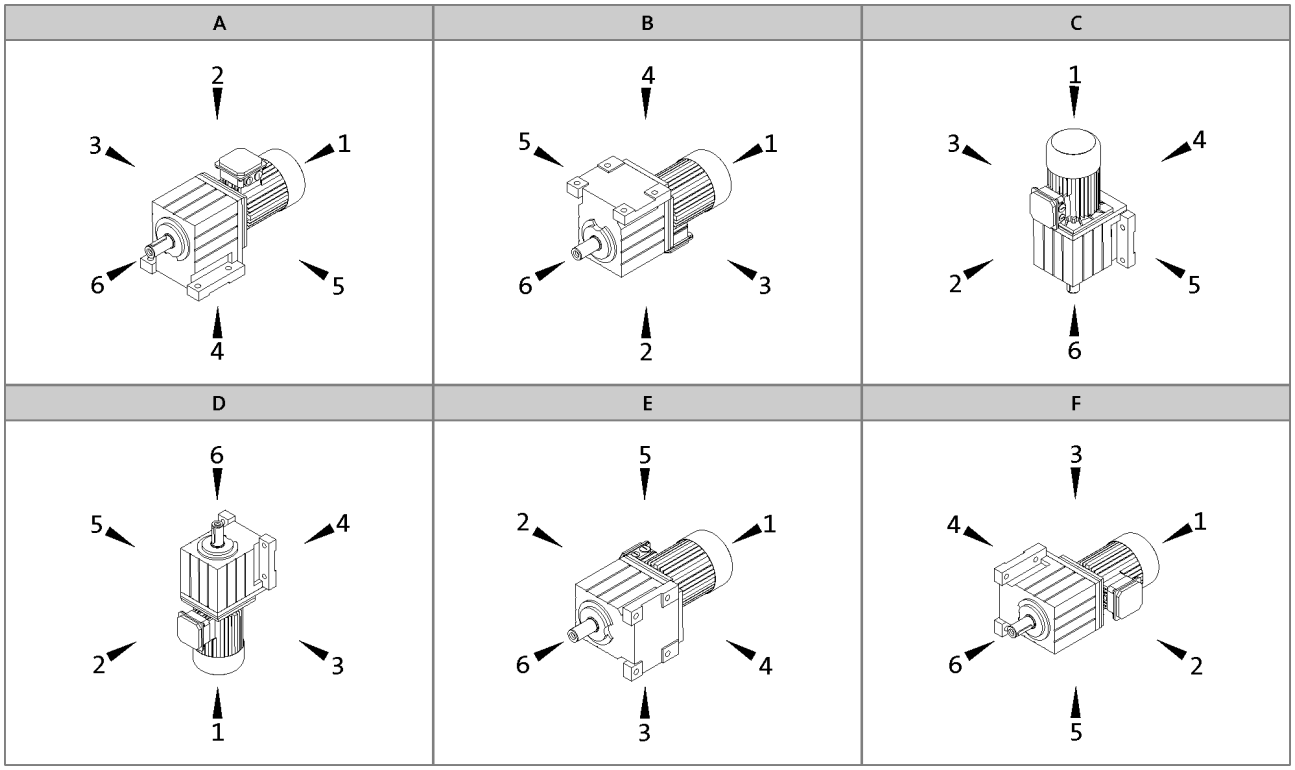

Terminal box / motec: 2, 3, 4, 5

Gearbox designs

Basic versions	
Motor efficiency	Standard efficiency Increased efficiency (IE2) Premium efficiency (IE3)
Surface and corrosion protection	No OKS (unpainted, aluminium housing) for GST03 OKS-G (primer: grey) OKS-S (paint: RAL 7012)
Lubricant	CLP 460 (mineral)
Ventilation	Oil control plugs for GST05 to 14 Breather elements for GST06 ... 14

Options	
Surface and corrosion protection	OKS-G (primer: grey) for GST03-2 OKS-S (special paint according to RAL) OKS-M (special paint according to RAL) OKS-L (special paint according to RAL)
Lubricant	CLP HC 320 (synthetic) CLP HC 220 USDA H1 (synthetic)
Shaft sealing rings	Driven shaft: Viton
Bearings	Driven shaft: reinforced for GST04 to 09-2/3
Ventilation	Breather elements for GST05 Compensation reservoir for GST09 to 14-2 in mounting position C
Nameplate	Metal nameplate (supplied loose) Adhesive nameplate (supplied loose)



Product information

Lenze provides a geared motor construction kit, which covers a wide range of requirements. Numerous drive-side and output-side options enable precise adaptation of the drive to the specific application. This is the basis for versatile applications and functional scalability of our gearboxes and geared motors.
The modular concept and high power density make extremely compact sizes possible. Optimised teeth profiles and ground gears ensure low-noise operation and low backlash. The gearboxes are of compact and hence space-saving construction.

Robust design with high efficiency

Together with three-phase AC motors, our helical gearboxes form a compact and powerful drive unit. They are rugged in design and feature high permissible radial forces, closely stepped speed reduction ratios and minimum backlash. The gearboxes are available as 1 and 2 and 3-stage versions with a torque of up to 5,920 Nm and a ratio of up to i= 435.

Types

- 1-, 2- and 3-stage gearboxes
- Solid shaft with keyway
- Foot or flange mounting
- With m500 three-phase AC motors (efficiency classes IE3) in the power range 5.5 ... 45 kW

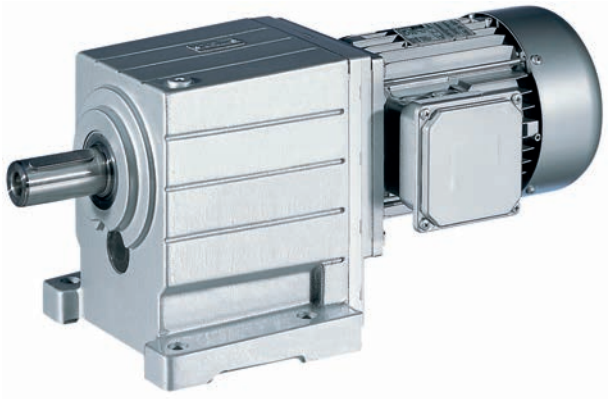



Functions and features

Gearbox type	GST
Housing	
Design	Cuboid
Material	Aluminium / cast iron
Solid shaft	
Design	with keyway to DIN 6885
Tolerance	k6 (d ≤ 50 mm) m6 (d > 50 mm)
Material	Tempered steel C45 or 42CrMo4
Hollow shaft	
Design	
Tolerance	
Material	
Toothed parts	
Design	Ground tooth flanks Optimised tooth flank geometry
Material	Case-hardened steel
Shaft-hub joint	
	1st stage/prestage/helical (bevel) gearbox: Friction-type connection Output stage (= 2nd, 3rd or 4th stage): Friction-type or positive-fit connection
Shaft sealing rings	
Design	With dust lip
Material	NB / FP
Bearing	
Design	Ball bearing / tapered-roller bearing depending on size and design
Lubricants	
Standard	DIN 51502
Quantities	corresponding to mounting position (see operating instructions)
Mechanical efficiency	
1-stage gearboxes [$\eta_{c=1}$]	0.98
2-stage gearboxes [$\eta_{c=1}$]	0.97
3-stage gearboxes [$\eta_{c=1}$]	0.95
4-stage gearboxes [$\eta_{c=1}$]	
Notes	



Functions and features

Lubricants

Lenze gearboxes and geared motors are ready for operation on delivery and are filled with lubricants specific to both the drive and the design. The mounting position and design specified in the order are key factors in choosing the volume of lubricant.

The lubricants listed in the lubricant table are approved for use in Lenze drives.

Lubricant table

Mode	CLP 460	CLP HC 320	CLP HC 220 USDA H1
Ambient temperature [°C]	0 ... +40	-25 ... +50	-20 ... +40
Specification	Mineral based oil with additives	Synthetic-based oil (synthetic hydrocarbon / poly-alpha-olefin oil)	
Note			For food processing industry
Changing interval	16000 operating hours not later than after three years (oil temperature 70 to 80 °C)	25000 operating hours not later than after three years (oil temperature 70 to 80 °C)	16000 operating hours not later than after three years (oil temperature 70 to 80 °C)
Fuchs	Fuchs Renolin CLP 460	Fuchs Renolin Unisyn CLP 320	bremer & leguil Cassida Fluid GL 220
Klüber	Klüberoil GEM1-460 N	Klübersynth GEM4-320 N	Klüberoil 4 UH1-220 N
Shell	Shell Omala S2 G 460	Shell Omala S4 GX HD 320	

► Please contact your Lenze sales office if you are operating at ambient temperatures in areas up to< -20 °C bzw. > or up to +40°C.



Functions and features

Surface and corrosion protection

For optimum protection of geared motors against ambient conditions, the surface and corrosion protection system (OKS) offers tailor-made solutions.

Various surface coatings combined with other protective measures ensure that the geared motors operate reliably even at high air humidity, in outdoor installations or in the presence of atmospheric impurities. Any colour from the RAL Classic collection can be chosen for the top coat. The geared motors are also available unpainted (no surface and corrosion protection).

Surface and corrosion protection system	Applications	Measures
	Catalogue text	Catalogue text
OKS-G (primed)	• Dependent on subsequent top coat applied	• 2K PUR priming coat (grey) • Zinc-coated screws • Rust-free breather elements Optional measures • Stainless steel nameplate
OKS-S (small)	• Standard applications • Internal installation in heated buildings • Air humidity up to 90%	• Surface coating as per corrosivity category C1 (in line with EN 12944-2) • Zinc-coated screws • Rust-free breather elements Optional measures • Stainless steel nameplate
OKS-M (medium)	• Internal installation in non-heated buildings • Covered, protected external installation • Air humidity up to 95%	• Surface coating as per corrosivity category C2 (in line with EN 12944-2) • Zinc-coated screws • Rust-free breather elements Optional measures • Stainless steel shaft • Stainless steel nameplate • Rust-free shrink disc (on request)
OKS-L (high)	• External installation • Air humidity above 95% • Chemical industry plants • Food industry	• Surface coating as per corrosivity category C3 (in line with EN 12944-2) • Blower cover and B end shield additionally primed • Cable glands with gaskets • Corrosion-resistant brake with cover ring, stainless friction plate, and chrome-plated armature plate (on request) • All screws/screw plugs zinc-coated • Stainless breather elements • Threaded holes that are not used are closed by means of plastic plugs Optional measures • Sealed recesses on motor (on request) • Stainless steel shaft • Stainless steel nameplate • Rust-free shrink disc (on request) • Additional priming coat on cast iron fan • Oil expansion tank and torque plates painted separately and supplied loose



Functions and features

Structure of surface coating

Surface and corrosion protection system	Corrosivity category	Surface coating	Colour
	DIN EN ISO 12944-2	Structure	
Without OKS (uncoated)		Dipping primed gearbox	
OKS-G (primed)		Dipping primed gearbox 2K PUR priming coat	
OKS-S (small)	Comparable to C1	Dipping primed gearbox 2K-PUR top coat	Standard: RAL 7012 Optional: RAL Classic
OKS-M (medium)	Comparable to C2	Dipping primed gearbox 2K PUR priming coat 2K-PUR top coat	Standard: RAL 7012 Optional: RAL Classic
OKS-L (high)	Comparable to C3	Dipping primed gearbox 2K PUR priming coat 2K-PUR top coat	Standard: RAL 7012 Optional: RAL Classic

► The gearboxes GST 03 have an aluminium housing, therefore a dipping primer is dispensed with in the case of these gearboxes.



Functions and features

Ventilation

Non-ventilated gearboxes
No ventilation is required for gearboxes GST03 to 04.

Gearboxes that may optionally be equipped with ventilation
Special measures are not usually required when using the GST05 gearbox. In borderline cases, e.g. at input speeds > 2000 r/min, we recommend the use of breather elements, which we can supply if required.

Ventilated gearboxes
Gearboxes GST06 to 14 are supplied with breather elements as standard.

Special measures for mounting position C (motor on top)
We recommend that an oil compensation reservoir is always used with gearbox sizes G□□09 to 14 in this mounting position. This reservoir can be purchased as an option. For illustrations and measures, please refer to the Accessories chapter.

This is not required at higher ratios or low input speeds. Please contact Lenze for confirmation in this case.



Dimensioning

General information about the data provided in this catalogue

The powers, torques and speeds specified in this catalogue are rounded values and are valid under the following conditions:

- Operating time/day = 8 h (100% OT)
- Duty class I for up to 10 switching operations/h
- Mounting positions and designs in this catalogue
- Standard lubricant
- T_{amb} = 20 °C for gearboxes,
  T_{amb} = 40 °C for motors (in accordance with EN 60034)
- Site altitude < = 1000 m amsl
- The selection tables provide the permissible mechanical powers and torques. For notes on the thermal power limit, see chapter drive dimensioning.
- The rated power specified for motors and geared motors applies to operating mode S1 (in accordance with EN 60034).

Under different operating conditions, the values obtained may vary from those listed here.
In the case of extreme operating conditions, please consult your Lenze sales office.



Dimensioning

Thermal power limit

The thermal power limit, defined by the heat balance, limits the permissible gearbox continuous power. It may be less than the mechanical power ratings listed in the selection tables.

The thermal power limit is affected by:
- the churning losses in the lubricant. These are determined by the mounting position and the circumferential speed of the gears;
- the load and the speed
- the ambient conditions: temperature, air circulation, input or dissipation via shafts and the foundation

Please consult your Lenze sales office
- if the following input speeds n_1 are exceeded on a continuous basis (continuous is defined as more than 8 h/day):

Motor frame size	Mounting position A, B, E, F	Mounting position C, D
063 ... 100	3000 r/min	3000 r/min
112 ... 132	3000 r/min	1500 r/min
160 ... 225	2000 r/min	1500 r/min

- if the following input speeds n_1 are exceeded:

Motor frame size	Mounting position A, B, E, F	Mounting position C, D
063 ... 100	4000 r/min	3000 r/min
112 ... 132	4000 r/min	2000 r/min
160 ... 225	3000 r/min	1500 r/min

- or if you are using the following gearbox type, size and ratio combinations at an input speed of n_1 > 1500 r/min:

Gearbox type	Gearbox size	Ratio i
GST helical gearboxes	07, 09, 11, 14	≤ 10

Possible ways of extending the application area

- synthetic lubricant (option)
- shaft sealing rings made from FP material/Viton (option)
- reduction in lubricant quantity
- cooling of the geared motor by means of air convection on the machine/system



Dimensioning

Load capacity and application factor

Load capacity c of gearbox
Rated value for the load capacity of Lenze geared motors.
- c is the ratio of the permissible rated torque of the gearbox to the rated torque supplied by the drive component (e.g. the built-in Lenze motor).
- The value of c must always be greater than the value of the application factor k calculated for the application.

Requierement: c ≥ k

Application factor k (according to DIN 3990)
Takes into account the influence of temporally variable loads which are actually present during the anticipated operating time of gearboxes and geared motors.
k is determined by:
- the type of load
- the load intensity
- temporal influences

Duty class	Load type	Intensity	
I	Smooth operation, small or light jolts	$F_I \leq 1.25$	$F_I = \frac{\frac{J_L}{i^2} + J_M + J_B + J_Z}{J_M + J_B + J_Z}$
II	Uneven operation, average jolts	$1.25 < F_I \leq 4$	
III	Uneven operation, severe jolts and/or alternating load	$F_I > 4$	

J_L= moment of inertia of the load
i = gearbox ratio
J_M= moment of inertia of the motor
J_B= moment of inertia of the motor brake
J_Z= moment of inertia of additional built-on motor accessories

Application factor (inverter operation)

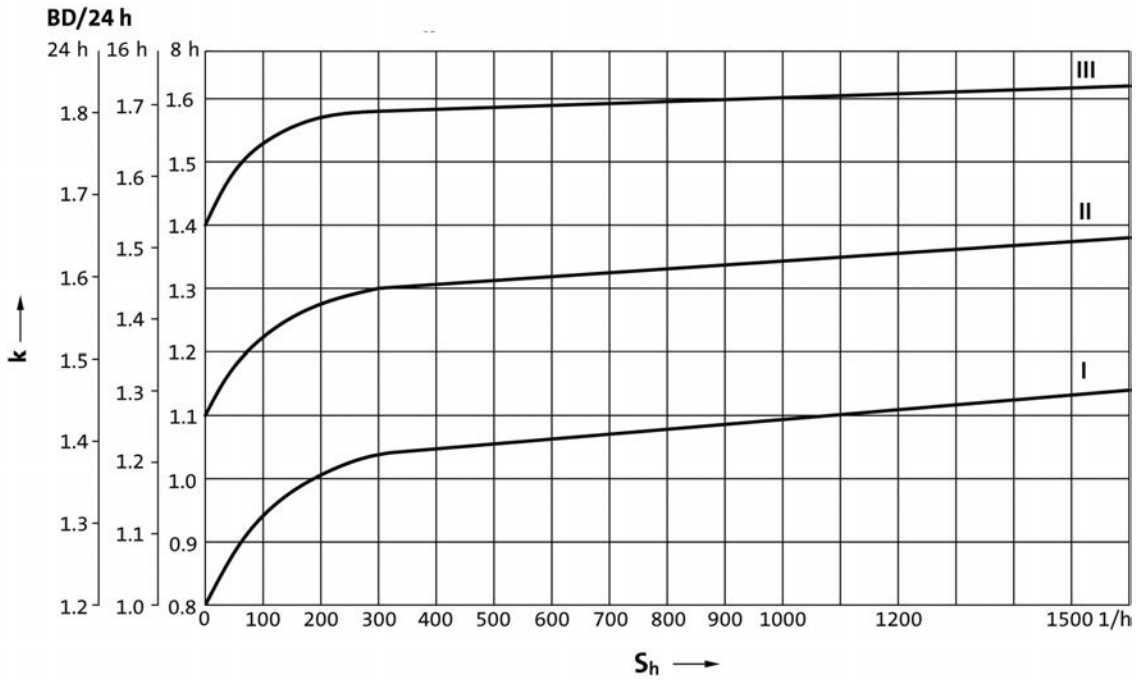

S_h= switching operations/hour



Dimensioning

Torque derating at low motor frequencies

During operation with the rated torque at low speeds (< 20 Hz), the integral fan does not rotate fast enough anymore to ensure sufficient cooling of the motor. In order to prevent overheating, operation without a blower requires a torque reduction of the motor.
The blower cools the motor steadily and irrespective of the motor speed. A torque reduction is not required and the motor can be actuated with its rated torque from 5 Hz to the rated frequency.

The diagram shows the motor frame size-dependent torque reduction for self-ventilated motors, taking the thermal behaviour during actuation of the inverter into consideration.

Torque characteristics

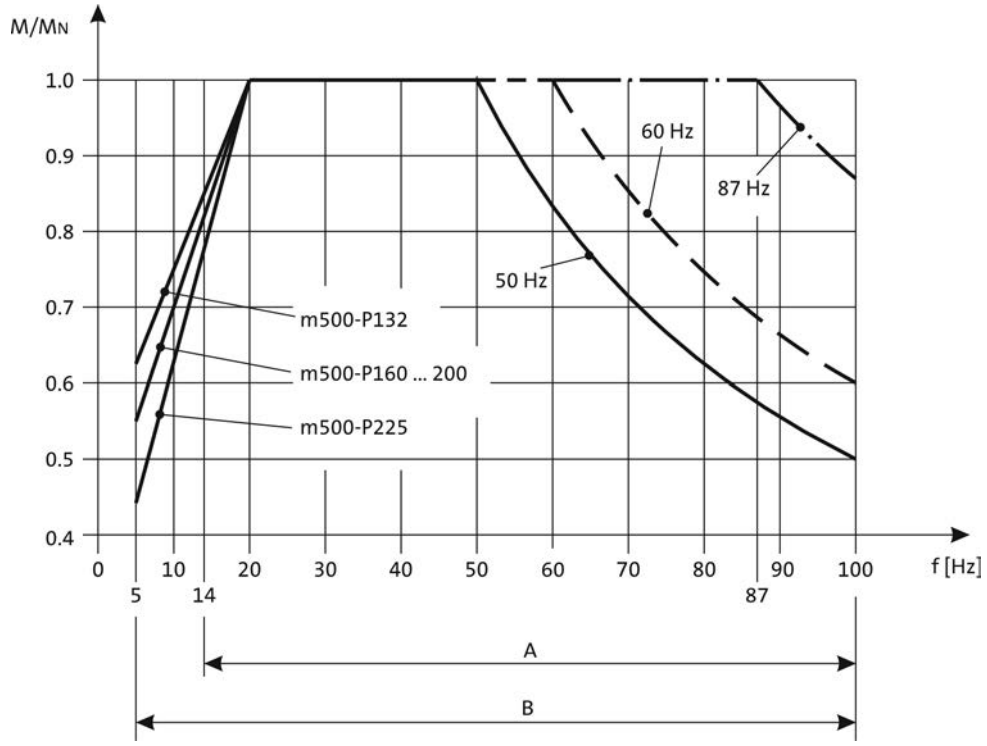

A = Operation with integral fan and brake
B = Operation with integral fan and brake control "Holding current reduction"

6.1

You can use the Drive Solution Designer for precise drive dimensioning.

The Drive Solution Designer helps you to carry out a fast and high-quality drive dimensioning.
The software includes well-founded and proven knowledge on drive applications and electro-mechanical drive components.

Please contact your Lenze sales office.



Dimensioning

Notes on the selection tables

The selection tables show the available combinations of gearbox type, number of stages, ratio and motor. They are used only to provide basic orientation.
The following legend indicates the structure of the selection tables.

Rated power Prated of the drive motor depending on the rated frequency

50 Hz: P_N = 5.5 kW
87 Hz: P_N = 9.6 kW

2-stufige Getriebe ← **Number of the gear stage of the gearbox**

Torque diagram

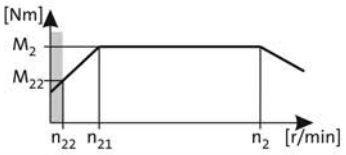

Mains operation 400 V, 50 Hz			Inverter operation 5 Hz -		- 20 Hz		- 50 Hz (1:10)			- 87 Hz (1:17.4)			i	Product		
n_2 [r/min]	M_2 [Nm]	c	n_{22} [r/min]	M_{22} [Nm]	n_{21} [r/min]	M_2 [Nm]	n_2 [r/min]	M_2 [Nm]	c	n_2 [r/min]	M_2 [Nm]	c		GST	m500	
118	432	2.9	12	268	49	432	118	432	2.9				12.362	GST09	-P132M4	69
116	439	1.4	12	272	48	439	116	439	1.4				12.571	GST07	-P132M4	63

Product Gearbox
Product Motor
Ratio i
Page number for dimensions

Load capacity c of the gearbox
c is the ratio between the permissible rated torque of the gearbox and the rated torque of the three-phase AC motor (converted to the driven shaft).
c must be always higher than the service factor **k** determined for the application **k**.

$$c = \frac{M_{2,zul}}{M_{1N} \cdot i \cdot \eta_{Getr}} > k$$

Mains operation
Output speed **n2**
Output torque **M2**

Inverter operation
The speed and torque data are valid for self-ventilated and forced ventilated drives. Forced ventilated drives can always output the torque **M2** in the entire setting ranges. In the case of self-ventilated drives, a reduction to **M22** is required in the lower speed range.

The following applies to self-ventilated geared motors:
n22 is the minimum speed where the torque **M22** is permissible, from **n21** to **n2**, the maximum torque is **M2**
The following applies to forced ventilated geared motors:
From the minimum speed **n22** to **n2**, the maximum torque is **M2**

Motor voltages

The power values and torques indicated in the selection tables refer to the following motor voltages:
- 50 Hz : Δ 230 V / Y 400 V
- 87 Hz : 400 V



Notes on ordering

We want to be sure that you receive the correct products in good time.

To allow us to achieve this we need:
- your address and your company data
- our product key for the individual products in this catalogue
- your delivery date and delivery address

Ordering procedure
Please use the ordering information checklist to ensure that you provide all the ordering information required for the various products.

The ordering information checklist, the product key, the basic versions, options, mounting position and position of the system blocks will be found in the General – Product key section.

A list of Lenze's worldwide sales offices can be found on the Internet: www.Lenze.com.



Ordering details checklist

☐ **Offer**

☐ **Order**

Customer No.

Job No.

Fax No. _____

Sender

_____ Company

_____ Made out by (name)

_____ Street/P.O. Box

_____ Department

_____ P.O. Box, City

_____ Telephone No.

_____ Date Signature

Delivery address (if different)

_____ Street/P.O. Box

_____ Desired delivery date

_____ P.O. Box, City

_____ Dispatching notes

Invoice recipient (if different)

_____ Street/P.O. Box

_____ Postal code, City



Ordering details checklist

Customer No. ☐☐☐☐☐☐☐☐

Job No. ☐☐☐☐☐☐☐☐☐☐

Page __

Quantity ☐☐☐☐

Efficiency class ☐ High efficiency (IE3)

Rated frequency ☐ 50 Hz ☐ 60 Hz ☐ 87 Hz

Ratio i ☐☐☐☐

GST ☐☐ – ☐ 1 / ☐ 2 / ☐ 3 ☐ M / ☐ E ☐ V ☐ A / ☐ B / ☐ C ☐ R / ☐ K / ☐ L

Motor frame size ☐☐☐C☐☐

Solid shaft d = ☐☐☐ mm (only with GST03)

Flange a_2 = ☐☐☐ mm

Mounting position A ☐ B ☐ C ☐ D ☐ E ☐ F ☐

Position of system blocks Terminal box 2 ☐ 3 ☐ 4 ☐ 5 ☐

Surface and corrosion protection

GST03: ☐ Without OKS (unpainted)

GST04 ... 14: ☐ OKS-S colour: RAL 7012 ☐ OKS-G (primed)

Options

Special lubricants

☐ CLP HC 320 (synthetic)

☐ CLP HC 220 USDA H1 (for the food industry)

Surface and corrosion protection

☐ OKS-S (small)

☐ OKS-M (medium) RAL ☐☐☐☐

☐ OKS-L (high)

☐ OKS-G (primed) only with GST03

Output shaft bearing

☐ Reinforced bearing for GST04 ... 09-2

Shaft sealing rings

☐ Viton

Breathing

☐ Breather elements for GST05

☐ Compensation reservoir in mounting position for GST 09 ... 14-2



Ordering details checklist

Three-phase AC motors options

Customer No. ☐☐☐☐☐☐☐☐

Job No. ☐☐☐☐☐☐☐☐☐☐

Page __

Motor connection

Terminal box
- ☐ with plug-in connector ICN 6-pin. Adhere to permissible rated motor current 20 A!
- ☐ with plug-in connector ICN 8-pin. Adhere to permissible rated motor current 20 A!
- ☐ with plug-in connector HAN10E. Adhere to permissible rated current 16 A!
- ☐ with plug-in connector HAN-Modular. Adhere to permissible rated current 16 / 40 A!

Cable entry — in position 1 ☐ 2 ☐ 3 ☐ 4 ☐ 5 ☐

Blower

☐ 1~ ☐ 3~

☐ Terminal box with plug-in connector ICN

Terminal box position 2 ☐ 3 ☐ 4 ☐ 5 ☐

Spring-applied brake

Brake version ☐ Standard

Brake size ☐

Characteristic torque ☐ Nm

Rated voltage AC ☐ DC ☐ ☐ V

Rectifier — Only in the case of AC supply voltage

- ☐ Half-wave rectifier
- ☐ Bridge rectifier
- ☐ Bridge/half-wave rectifier (overexcitation)
- ☐ Bridge/half-wave rectifier (holding current reduction)

Brake options — Manual release lever in position 2 ☐ 3 ☐ 4 ☐ 5 ☐

☐ Low-noise version (Standard in the case of brake with speed/position encoder)

6.1



Ordering details checklist

Three-phase AC motors options

Customer No. ☐☐☐☐☐☐☐☐

Job No. ☐☐☐☐☐☐☐☐☐☐

Page __

Speed/position encoder

Resolver ☐ RS1

Incremental encoder HTL ☐ IG128-24V-H ☐ IG512-24V-H ☐ IG1024-24V-H ☐ IG2048-24V-H

Incremental encoder TTL ☐ IG512-5V-T ☐ IG1024-5V-T ☐ IG2048-5V-T

Feedback with ICN connector ☐ IG128-24V-H not possible with plug-in connector!

Motor protection

☐ TKO ☐ KTY 83-110 ☐ KTY 84-130

☐ PTC

Further options

☐ 2nd nameplate (adhesive nameplate/metal nameplate)

6.1



Permissible radial and axial forces at output

Permissible radial force
$F_{rad,per} = \min(f_w \times f_\alpha \times F_{rad,max}$; $f_w \times F_{rad,max}$ at $n_2 \leq 50$ r/min)

Permissible axial force
$F_{ax,per} = F_{ax,max}$ if $F_{rad} = 0$

If F_{rad} **and** $F_{ax} \neq 0$, please contact your Lenze sales office.

Application of forces

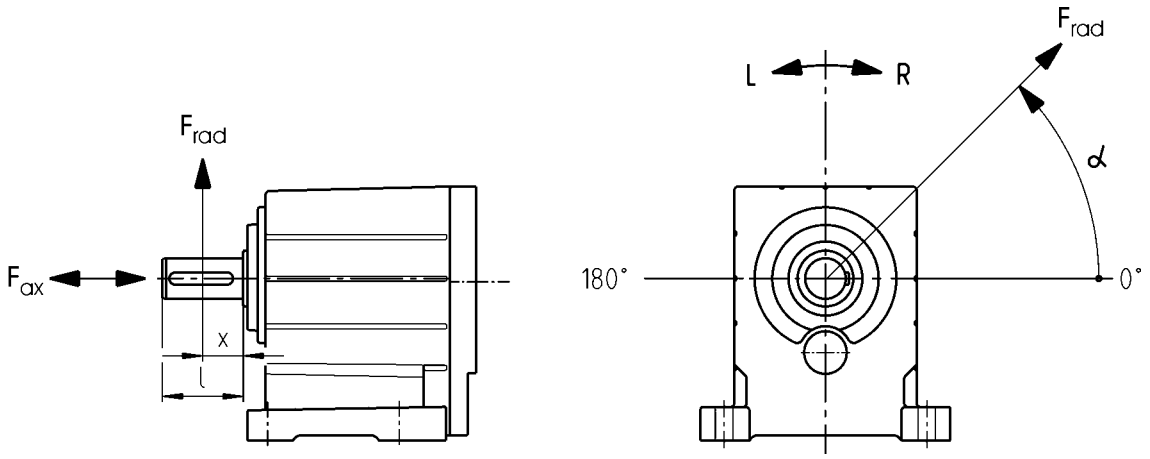

Effective direction factor f_α at output shaft

GST03-2

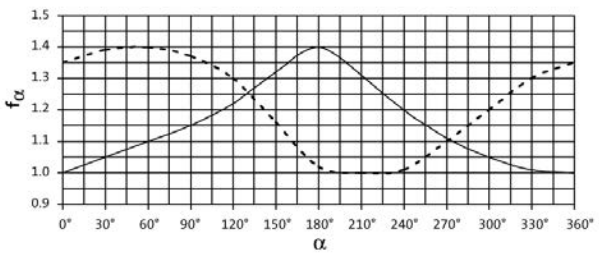

GST04 to 09-1

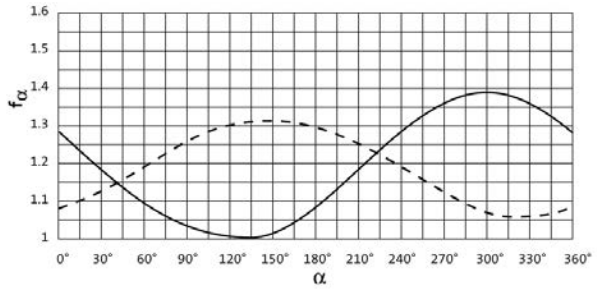

GST04 to 09-2, 3

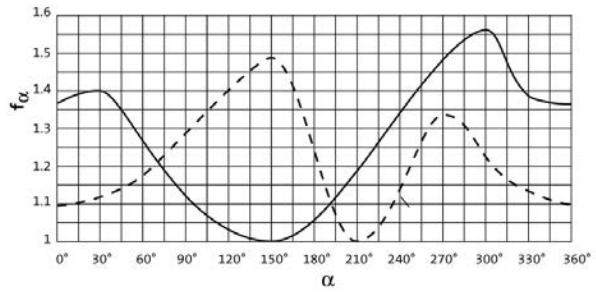

GST11 to 14-2, 3

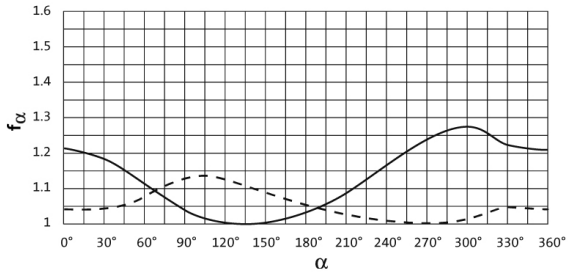

——— Direction of rotation R
— — — Direction of rotation L



Permissible radial and axial forces at output

Additional load factor f_w at output shaft

GST03-2	GST04 to 09-1, 2, 3
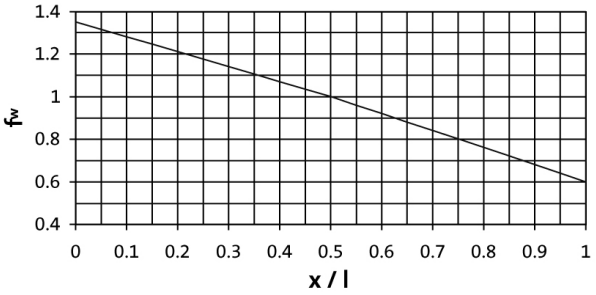	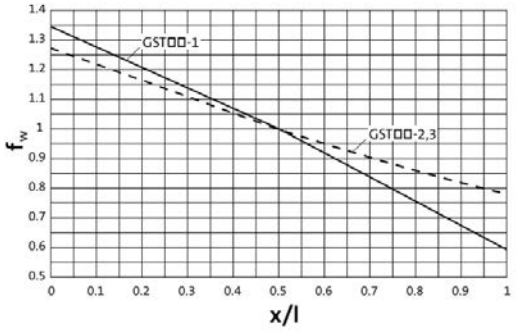

GST□□-1

Size	n_2 [r/min]								
Gearbox	2500	1600	1000	600	400	200	125	80	≤50

	Max. radial force, Solid shaft								
	$F_{rad,max}$	$F_{rad,max}$	$F_{rad,max}$	$F_{rad,max}$	$F_{rad,max}$	$F_{rad,max}$	$F_{rad,max}$	$F_{rad,max}$	$F_{rad,max}$
	[N]	[N]	[N]	[N]	[N]	[N]	[N]	[N]	[N]
GST04	100	180	440	600	850	1050	1050	1050	1050
GST05	100	250	550	750	1400	2000	2300	2300	2300
GST06	200	600	800	800	1100	2200	2900	3500	3500
GST07	700	1000	1200	1300	1900	3000	3900	4700	5300
GST09	1750	2200	2500	2500	3500	6200	7900	9000	9500

	Max. axial force, Solid shaft								
	$F_{ax,max}$	$F_{ax,max}$	$F_{ax,max}$	$F_{ax,max}$	$F_{ax,max}$	$F_{ax,max}$	$F_{ax,max}$	$F_{ax,max}$	$F_{ax,max}$
	[N]	[N]	[N]	[N]	[N]	[N]	[N]	[N]	[N]
GST04	600	800	1000	1300	1400	1400	1400	1400	1400
GST05	800	1100	1400	2000	2000	2000	2000	2000	2000
GST06	900	1200	1500	2000	2500	2500	2500	2500	2500
GST07	1200	1600	2000	2700	3300	3700	3700	3700	3700
GST09	2500	3400	4300	5700	6800	7000	7000	7000	7000

6.1

- Application of force F_{rad}: centre of shaft journal (x = l/2)
- $F_{ax,max}$ only valid with F_{rad} = 0



Permissible radial and axial forces at output

GST□□-2 / 3 with standard bearings

Size	n_2 [r/min]									
Gearbox	1000	630	400	250	160	100	63	40	25	≤16

	Max. radial force, Solid shaft									
	$F_{rad,max}$	$F_{rad,max}$	$F_{rad,max}$	$F_{rad,max}$	$F_{rad,max}$	$F_{rad,max}$	$F_{rad,max}$	$F_{rad,max}$	$F_{rad,max}$	$F_{rad,max}$
	[N]	[N]	[N]	[N]	[N]	[N]	[N]	[N]	[N]	[N]
GST03	100	300	630	710	800	920	1100	1400	1500	1500
GST04	730	950	1250	1450	1700	2100	2500	2650	2650	2650
GST05	1150	1500	1950	2200	2600	3000	3500	3800	3900	3900
GST06	140	750	2350	2600	3100	3600	4300	4350	4350	4350
GST07	140	2050	3400	3800	4500	5400	6400	7600	9100	9500
GST09	1500	1950	6800	7600	9400	11500	11500	11500	11500	11500
GST11	11500	14400	17000	19000	21000	21000	21000	21000	21000	21000
GST14	16600	20700	24000	27000	31000	36000	39000	40000	40000	40000

	Max. axial force, Solid shaft									
	$F_{ax,max}$	$F_{ax,max}$	$F_{ax,max}$	$F_{ax,max}$	$F_{ax,max}$	$F_{ax,max}$	$F_{ax,max}$	$F_{ax,max}$	$F_{ax,max}$	$F_{ax,max}$
	[N]	[N]	[N]	[N]	[N]	[N]	[N]	[N]	[N]	[N]
GST03	300	400	600	700	800	900	1000	1000	1000	1000
GST04	600	800	1100	1300	1650	2000	2000	2000	2000	2000
GST05	1200	1600	2000	2300	2650	3100	3600	3600	3600	3600
GST06	500	600	850	900	1250	1800	2600	3600	4800	4800
GST07	1100	1500	1900	2200	2900	3900	5300	7000	7000	7000
GST09	1300	1800	2300	2800	4000	5600	8100	11000	12000	12000
GST11	5700	7600	9500	10000	11000	14000	16000	16000	16000	16000
GST14	9000	12000	15000	16000	18000	20000	20000	20000	20000	20000

- Application of force F_{rad}: centre of shaft journal (x = l/2)
- $F_{ax,max}$ only valid with F_{rad} = 0



Permissible radial and axial forces at output

GST□□-2 / 3 with reinforced bearing

Size	n_2 [r/min]									
Gearbox	1000	630	400	250	160	100	63	40	25	≤16

	Max. radial force, Solid shaft (reinforced bearings))									
	$F_{rad,max}$	$F_{rad,max}$	$F_{rad,max}$	$F_{rad,max}$	$F_{rad,max}$	$F_{rad,max}$	$F_{rad,max}$	$F_{rad,max}$	$F_{rad,max}$	$F_{rad,max}$
	[N]	[N]	[N]	[N]	[N]	[N]	[N]	[N]	[N]	[N]
GST04	1900	2350	2850	3150	3550	3750	3750	3750	3750	3750
GST05	3350	3950	4900	5400	5400	5400	5400	5400	5400	5400
GST06	4250	5100	6300	7000	7700	7700	7700	7700	7700	7700
GST07	5650	6850	8500	9500	10500	12500	13000	13000	13000	13000
GST09	11300	14000	16500	17000	17000	17000	17000	17000	17000	17000

	Max. axial force, Solid shaft (reinforced bearings))									
	$F_{ax,max}$	$F_{ax,max}$	$F_{ax,max}$	$F_{ax,max}$	$F_{ax,max}$	$F_{ax,max}$	$F_{ax,max}$	$F_{ax,max}$	$F_{ax,max}$	$F_{ax,max}$
	[N]	[N]	[N]	[N]	[N]	[N]	[N]	[N]	[N]	[N]
GST04	1000	1300	1700	1900	2200	2500	2500	2500	2500	2500
GST05	2100	2800	3600	3900	4300	4500	4500	4500	4500	4500
GST06	2100	2800	3500	3600	4200	4900	5700	5700	5700	5700
GST07	3300	4400	5500	6100	7100	8300	9000	9000	9000	9000
GST09	4800	6400	8000	9000	10500	12500	14000	14000	14000	14000

- Application of force F_{rad}: centre of shaft journal (x = l/2)
- $F_{ax,max}$ only valid with F_{rad} = 0



Output backlash in angular minutes

► Backlash ϕ depending on ratio i

GST04 to 09-1

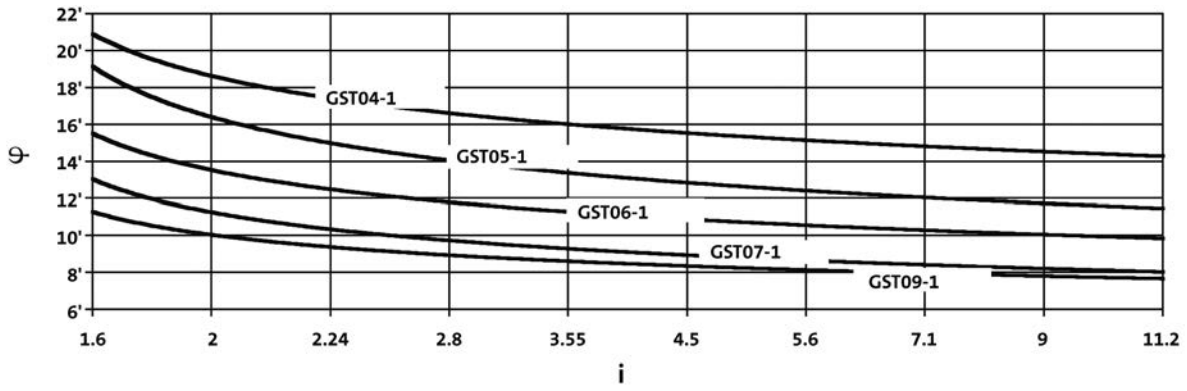

GST03-2

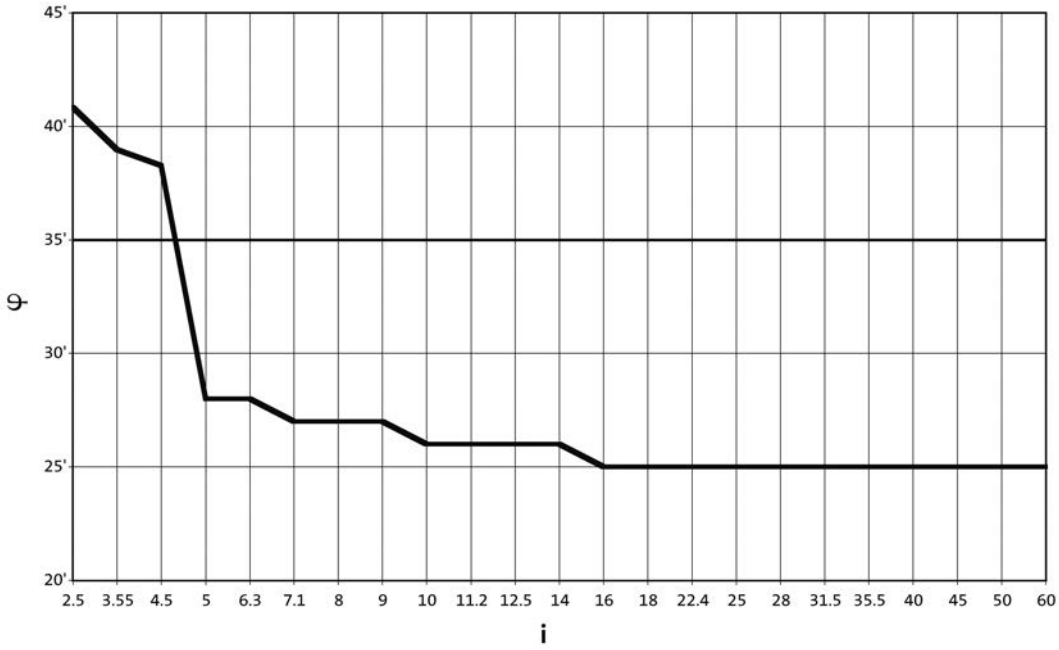

6.1



Output backlash in angular minutes

► Backlash ϕ depending on ratio i

GST04 to 14-2

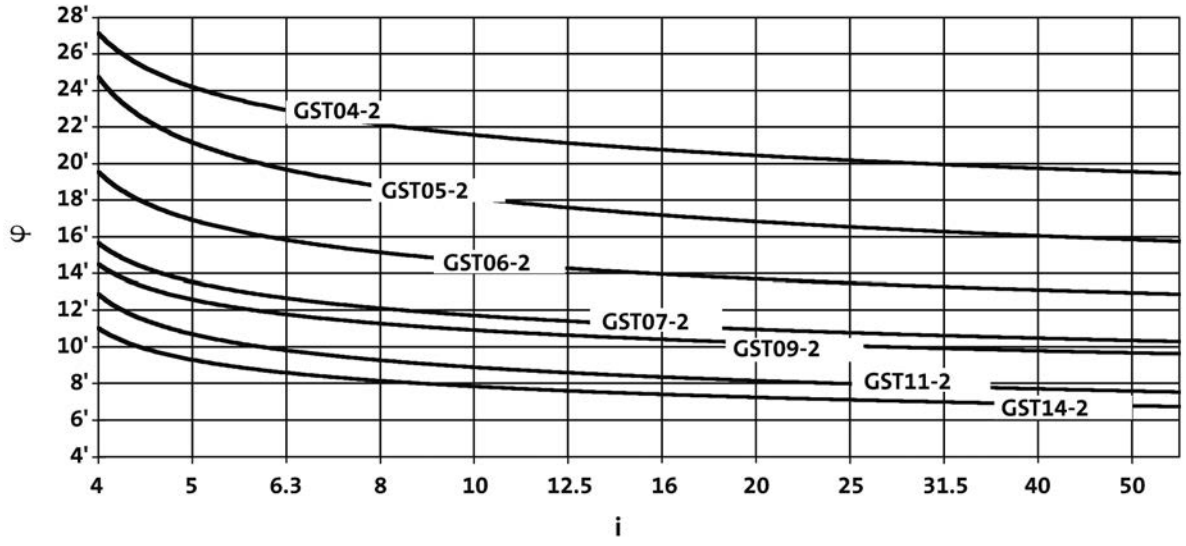

GST05 to 14-3

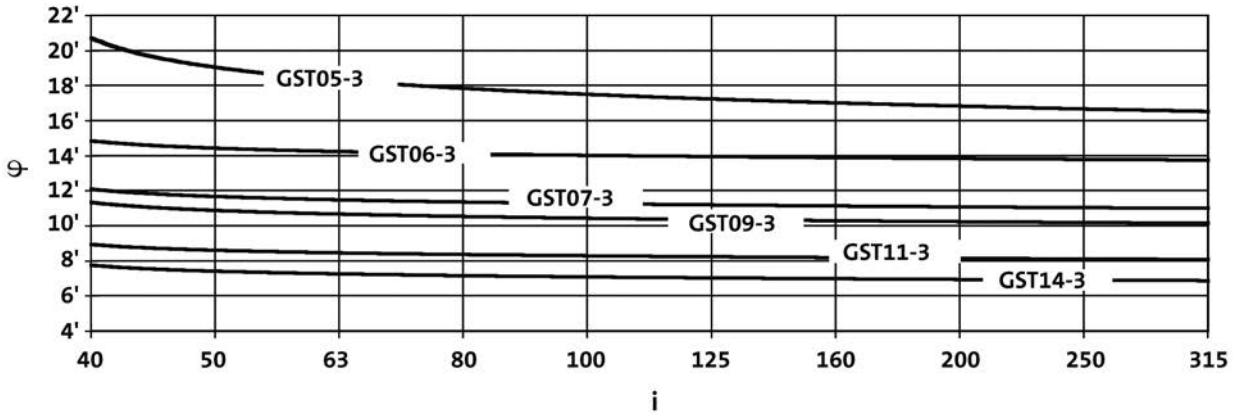

6.1



Moments of inertia

GST□□-1

► Moment of inertia (J) depending on ratio i

Gearbox			GST04
1.600	J	[kgcm²]	0.267
2.048	J	[kgcm²]	0.194
2.240	J	[kgcm²]	0.172
2.857	J	[kgcm²]	0.126
3.500	J	[kgcm²]	0.099
4.400	J	[kgcm²]	0.067
5.667	J	[kgcm²]	0.047
7.182	J	[kgcm²]	0.031
9.000	J	[kgcm²]	0.022
11.857	J	[kgcm²]	0.013

Gearbox			GST05
1.600	J	[kgcm²]	0.760
2.048	J	[kgcm²]	0.549
2.240	J	[kgcm²]	0.480
2.857	J	[kgcm²]	0.354
3.500	J	[kgcm²]	0.272
4.556	J	[kgcm²]	0.175
5.667	J	[kgcm²]	0.129
7.333	J	[kgcm²]	0.062
8.900	J	[kgcm²]	0.060
11.375	J	[kgcm²]	0.039

Gearbox			GST06
1.600	J	[kgcm²]	2.010
2.048	J	[kgcm²]	1.460
2.240	J	[kgcm²]	1.270
2.857	J	[kgcm²]	0.969
3.500	J	[kgcm²]	0.736
4.556	J	[kgcm²]	0.481
5.667	J	[kgcm²]	0.359
7.333	J	[kgcm²]	0.226
8.900	J	[kgcm²]	0.167
11.250	J	[kgcm²]	0.109

Gearbox			GST07
1.625	J	[kgcm²]	6.120
2.000	J	[kgcm²]	4.780
2.240	J	[kgcm²]	4.020
2.857	J	[kgcm²]	2.690
3.500	J	[kgcm²]	2.150
4.556	J	[kgcm²]	1.370
5.583	J	[kgcm²]	1.050
7.333	J	[kgcm²]	0.664
8.900	J	[kgcm²]	0.494
11.250	J	[kgcm²]	0.320

Gearbox			GST09
1.560	J	[kgcm²]	22.200
2.048	J	[kgcm²]	15.600
2.333	J	[kgcm²]	12.200
2.810	J	[kgcm²]	9.580
3.444	J	[kgcm²]	7.300
4.667	J	[kgcm²]	4.600
5.667	J	[kgcm²]	3.510
7.333	J	[kgcm²]	2.260
8.900	J	[kgcm²]	1.660
11.250	J	[kgcm²]	1.110

► The moments of inertia relate to the drive shaft of the gearbox.
► The total moment of inertia is calculated by adding the values of the gearbox, motor and accessories.



Moments of inertia

GST□□-2

► Moment of inertia (J) depending on ratio i

Gearbox			GST03
2.597	J	[kgcm²]	0.260
3.413	J	[kgcm²]	0.169
4.368	J	[kgcm²]	0.117
5.312	J	[kgcm²]	0.179
5.965	J	[kgcm²]	0.173
6.982	J	[kgcm²]	0.122
7.840	J	[kgcm²]	0.119
8.935	J	[kgcm²]	0.089
10.033	J	[kgcm²]	0.086
11.429	J	[kgcm²]	0.059
12.833	J	[kgcm²]	0.057
14.836	J	[kgcm²]	0.041
16.660	J	[kgcm²]	0.040
19.013	J	[kgcm²]	0.028
21.350	J	[kgcm²]	0.027
24.595	J	[kgcm²]	0.019
27.618	J	[kgcm²]	0.019
32.000	J	[kgcm²]	0.012
35.933	J	[kgcm²]	0.012
41.455	J	[kgcm²]	0.008
46.550	J	[kgcm²]	0.008
52.909	J	[kgcm²]	0.005
59.413	J	[kgcm²]	0.005

Gearbox			GST04
2.956	J	[kgcm²]	0.337
3.333	J	[kgcm²]	0.324
4.053	J	[kgcm²]	0.312
4.571	J	[kgcm²]	0.300
5.187	J	[kgcm²]	0.222
5.850	J	[kgcm²]	0.215
6.400	J	[kgcm²]	0.189
7.040	J	[kgcm²]	0.264
8.000	J	[kgcm²]	0.257
9.010	J	[kgcm²]	0.193
9.856	J	[kgcm²]	0.170
11.200	J	[kgcm²]	0.166
12.571	J	[kgcm²]	0.126
14.286	J	[kgcm²]	0.123
15.400	J	[kgcm²]	0.098
17.500	J	[kgcm²]	0.097
19.360	J	[kgcm²]	0.063
22.000	J	[kgcm²]	0.062
24.933	J	[kgcm²]	0.044
28.333	J	[kgcm²]	0.043
31.600	J	[kgcm²]	0.030
35.909	J	[kgcm²]	0.030
39.600	J	[kgcm²]	0.021
45.000	J	[kgcm²]	0.021
52.171	J	[kgcm²]	0.013
59.286	J	[kgcm²]	0.013

► The moments of inertia relate to the drive shaft of the gearbox.
► The total moment of inertia is calculated by adding the values of the gearbox, motor and accessories.



Moments of inertia

GST□□-2

► Moment of inertia (J) depending on ratio i

Gearbox			GST05
2.956	J	[kgcm²]	0.986
3.333	J	[kgcm²]	0.944
4.053	J	[kgcm²]	0.903
4.571	J	[kgcm²]	0.864
5.187	J	[kgcm²]	0.637
5.850	J	[kgcm²]	0.613
6.400	J	[kgcm²]	0.533
7.238	J	[kgcm²]	0.400
8.163	J	[kgcm²]	0.388
9.010	J	[kgcm²]	0.543
10.000	J	[kgcm²]	0.300
11.200	J	[kgcm²]	0.462
13.016	J	[kgcm²]	0.178
14.356	J	[kgcm²]	0.131
16.190	J	[kgcm²]	0.128
17.500	J	[kgcm²]	0.271
20.044	J	[kgcm²]	0.164
22.778	J	[kgcm²]	0.161
24.933	J	[kgcm²]	0.119
28.333	J	[kgcm²]	0.117
32.267	J	[kgcm²]	0.079
36.667	J	[kgcm²]	0.078
39.160	J	[kgcm²]	0.058
44.500	J	[kgcm²]	0.057
50.050	J	[kgcm²]	0.039
56.875	J	[kgcm²]	0.038

Gearbox			GST06
3.033	J	[kgcm²]	2.720
3.333	J	[kgcm²]	2.610
4.160	J	[kgcm²]	2.510
4.571	J	[kgcm²]	2.410
5.324	J	[kgcm²]	1.760
5.850	J	[kgcm²]	1.710
6.400	J	[kgcm²]	1.470
7.040	J	[kgcm²]	2.070
8.163	J	[kgcm²]	1.060
9.010	J	[kgcm²]	1.500
10.000	J	[kgcm²]	0.820
11.200	J	[kgcm²]	1.260
12.571	J	[kgcm²]	0.955
14.286	J	[kgcm²]	0.932
15.400	J	[kgcm²]	0.748
17.500	J	[kgcm²]	0.733
20.044	J	[kgcm²]	0.457
22.778	J	[kgcm²]	0.450
24.933	J	[kgcm²]	0.332
28.333	J	[kgcm²]	0.326
32.267	J	[kgcm²]	0.221
36.667	J	[kgcm²]	0.218
39.160	J	[kgcm²]	0.162
44.500	J	[kgcm²]	0.160
49.500	J	[kgcm²]	0.110
56.250	J	[kgcm²]	0.108

► The moments of inertia relate to the drive shaft of the gearbox.
► The total moment of inertia is calculated by adding the values of the gearbox, motor and accessories.



Moments of inertia

GST□□-2

► Moment of inertia (J) depending on ratio i

Gearbox			GST07
3.048	J	[kgcm²]	8.200
3.350	J	[kgcm²]	7.920
4.225	J	[kgcm²]	7.650
4.643	J	[kgcm²]	7.390
5.200	J	[kgcm²]	5.640
5.714	J	[kgcm²]	5.460
6.400	J	[kgcm²]	4.490
7.150	J	[kgcm²]	6.270
8.125	J	[kgcm²]	6.040
8.800	J	[kgcm²]	4.730
9.856	J	[kgcm²]	3.900
11.200	J	[kgcm²]	3.780
12.571	J	[kgcm²]	2.860
14.286	J	[kgcm²]	2.790
15.400	J	[kgcm²]	2.260
17.500	J	[kgcm²]	2.210
20.044	J	[kgcm²]	1.380
22.778	J	[kgcm²]	1.350
24.567	J	[kgcm²]	1.020
27.917	J	[kgcm²]	1.010
32.267	J	[kgcm²]	0.664
36.667	J	[kgcm²]	0.653
39.160	J	[kgcm²]	0.487
44.500	J	[kgcm²]	0.479
49.500	J	[kgcm²]	0.330
56.250	J	[kgcm²]	0.325

Gearbox			GST09
4.056	J	[kgcm²]	27.000
4.457	J	[kgcm²]	25.900
5.324	J	[kgcm²]	18.100
5.850	J	[kgcm²]	17.500
6.667	J	[kgcm²]	14.200
7.305	J	[kgcm²]	11.300
8.027	J	[kgcm²]	11.000
9.010	J	[kgcm²]	15.200
10.267	J	[kgcm²]	12.400
11.667	J	[kgcm²]	12.100
12.362	J	[kgcm²]	9.790
14.048	J	[kgcm²]	9.530
15.156	J	[kgcm²]	7.650
17.222	J	[kgcm²]	7.490
20.533	J	[kgcm²]	4.500
23.333	J	[kgcm²]	4.410
24.933	J	[kgcm²]	3.380
28.333	J	[kgcm²]	3.320
32.267	J	[kgcm²]	2.250
36.667	J	[kgcm²]	2.210
39.160	J	[kgcm²]	1.640
44.500	J	[kgcm²]	1.620
49.500	J	[kgcm²]	1.120
56.250	J	[kgcm²]	1.100

► The moments of inertia relate to the drive shaft of the gearbox.
► The total moment of inertia is calculated by adding the values of the gearbox, motor and accessories.



Moments of inertia

GST□□-2

► Moment of inertia (J) depending on ratio i

Gearbox			GST11
4.056	J	[kgcm²]	82.200
4.457	J	[kgcm²]	79.000
5.324	J	[kgcm²]	55.400
5.850	J	[kgcm²]	53.500
6.400	J	[kgcm²]	45.700
6.864	J	[kgcm²]	67.500
7.800	J	[kgcm²]	65.100
9.010	J	[kgcm²]	46.800
9.856	J	[kgcm²]	40.200
11.200	J	[kgcm²]	39.000
12.571	J	[kgcm²]	29.400
14.286	J	[kgcm²]	28.700
15.400	J	[kgcm²]	23.000
17.500	J	[kgcm²]	22.500
20.289	J	[kgcm²]	14.300
23.056	J	[kgcm²]	14.100
24.933	J	[kgcm²]	10.600
28.333	J	[kgcm²]	10.400
32.267	J	[kgcm²]	7.040
36.667	J	[kgcm²]	6.930
39.160	J	[kgcm²]	5.150
44.500	J	[kgcm²]	5.080
49.500	J	[kgcm²]	3.520
56.250	J	[kgcm²]	3.440

Gearbox			GST14
4.225	J	[kgcm²]	226.000
4.643	J	[kgcm²]	216.000
5.200	J	[kgcm²]	168.000
5.714	J	[kgcm²]	161.000
6.286	J	[kgcm²]	141.000
7.150	J	[kgcm²]	183.000
8.027	J	[kgcm²]	100.000
8.800	J	[kgcm²]	139.000
9.841	J	[kgcm²]	75.100
11.000	J	[kgcm²]	119.000
12.362	J	[kgcm²]	89.000
14.048	J	[kgcm²]	86.600
15.156	J	[kgcm²]	67.600
17.222	J	[kgcm²]	66.000
20.044	J	[kgcm²]	45.800
22.778	J	[kgcm²]	44.900
24.567	J	[kgcm²]	33.200
27.917	J	[kgcm²]	32.600
32.267	J	[kgcm²]	21.500
36.667	J	[kgcm²]	21.200
39.160	J	[kgcm²]	15.700
44.500	J	[kgcm²]	15.500
49.500	J	[kgcm²]	10.600
56.250	J	[kgcm²]	10.500

► The moments of inertia relate to the drive shaft of the gearbox.
► The total moment of inertia is calculated by adding the values of the gearbox, motor and accessories.



Moments of inertia

GST□□-3

► Moment of inertia (J) depending on ratio i

Gearbox			GST05
36.267	J	[kgcm²]	0.195
46.259	J	[kgcm²]	0.141
56.667	J	[kgcm²]	0.108
63.467	J	[kgcm²]	0.192
71.238	J	[kgcm²]	0.073
80.952	J	[kgcm²]	0.139
91.746	J	[kgcm²]	0.050
99.167	J	[kgcm²]	0.107
116.277	J	[kgcm²]	0.033
124.667	J	[kgcm²]	0.072
145.714	J	[kgcm²]	0.023
160.556	J	[kgcm²]	0.050
179.067	J	[kgcm²]	0.033
191.973	J	[kgcm²]	0.014
224.400	J	[kgcm²]	0.023
255.000	J	[kgcm²]	0.023
295.638	J	[kgcm²]	0.014
335.952	J	[kgcm²]	0.014

Gearbox			GST06
39.200	J	[kgcm²]	0.362
44.000	J	[kgcm²]	0.195
51.022	J	[kgcm²]	0.320
53.900	J	[kgcm²]	0.178
67.760	J	[kgcm²]	0.114
70.156	J	[kgcm²]	0.160
80.952	J	[kgcm²]	0.203
87.267	J	[kgcm²]	0.150
99.167	J	[kgcm²]	0.150
109.707	J	[kgcm²]	0.096
124.667	J	[kgcm²]	0.096
141.289	J	[kgcm²]	0.063
160.556	J	[kgcm²]	0.063
179.067	J	[kgcm²]	0.043
203.485	J	[kgcm²]	0.042
231.733	J	[kgcm²]	0.040
255.000	J	[kgcm²]	0.029
290.400	J	[kgcm²]	0.027
330.000	J	[kgcm²]	0.027
382.590	J	[kgcm²]	0.026
434.762	J	[kgcm²]	0.025

Gearbox			GST07
39.200	J	[kgcm²]	0.974
44.000	J	[kgcm²]	0.534
51.022	J	[kgcm²]	0.843
53.900	J	[kgcm²]	0.484
65.079	J	[kgcm²]	0.313
70.156	J	[kgcm²]	0.431
79.762	J	[kgcm²]	0.536
85.983	J	[kgcm²]	0.400
97.708	J	[kgcm²]	0.399
111.915	J	[kgcm²]	0.238
127.176	J	[kgcm²]	0.237
139.211	J	[kgcm²]	0.166
158.194	J	[kgcm²]	0.166
180.156	J	[kgcm²]	0.108
204.722	J	[kgcm²]	0.107
236.622	J	[kgcm²]	0.101
248.458	J	[kgcm²]	0.077
268.889	J	[kgcm²]	0.101
326.333	J	[kgcm²]	0.073
367.033	J	[kgcm²]	0.094
417.083	J	[kgcm²]	0.067

Gearbox			GST09
40.136	J	[kgcm²]	2.140
43.267	J	[kgcm²]	1.550
49.167	J	[kgcm²]	1.530
53.044	J	[kgcm²]	1.380
60.278	J	[kgcm²]	1.370
71.867	J	[kgcm²]	1.170
81.667	J	[kgcm²]	1.160
93.541	J	[kgcm²]	0.706
99.167	J	[kgcm²]	1.070
113.585	J	[kgcm²]	0.652
129.074	J	[kgcm²]	0.649
141.289	J	[kgcm²]	0.458
160.556	J	[kgcm²]	0.456
182.844	J	[kgcm²]	0.297
207.778	J	[kgcm²]	0.295
236.622	J	[kgcm²]	0.275
252.167	J	[kgcm²]	0.212
268.889	J	[kgcm²]	0.275
326.333	J	[kgcm²]	0.198
363.000	J	[kgcm²]	0.255
412.500	J	[kgcm²]	0.183

► The moments of inertia relate to the drive shaft of the gearbox.
► The total moment of inertia is calculated by adding the values of the gearbox, motor and accessories.



Moments of inertia

GST□□-3

► Moment of inertia (J) depending on ratio i

Gearbox			GST11
40.816	J	[kgcm²]	6.360
44.000	J	[kgcm²]	5.660
50.000	J	[kgcm²]	5.600
57.968	J	[kgcm²]	4.770
61.250	J	[kgcm²]	4.080
71.011	J	[kgcm²]	3.520
80.694	J	[kgcm²]	3.500
87.267	J	[kgcm²]	3.220
99.167	J	[kgcm²]	3.200
112.933	J	[kgcm²]	2.930
129.074	J	[kgcm²]	1.940
146.993	J	[kgcm²]	1.770
158.194	J	[kgcm²]	1.400
180.156	J	[kgcm²]	1.290
207.778	J	[kgcm²]	0.880
236.622	J	[kgcm²]	0.818
252.167	J	[kgcm²]	0.633
268.889	J	[kgcm²]	0.816
326.333	J	[kgcm²]	0.589
363.000	J	[kgcm²]	0.756
412.500	J	[kgcm²]	0.545

Gearbox			GST14
40.185	J	[kgcm²]	24.400
42.580	J	[kgcm²]	18.300
48.386	J	[kgcm²]	18.100
53.148	J	[kgcm²]	20.500
59.321	J	[kgcm²]	13.200
69.042	J	[kgcm²]	11.500
78.457	J	[kgcm²]	11.400
93.541	J	[kgcm²]	6.570
96.157	J	[kgcm²]	10.400
106.296	J	[kgcm²]	6.520
130.278	J	[kgcm²]	6.000
139.211	J	[kgcm²]	4.420
158.194	J	[kgcm²]	4.400
171.111	J	[kgcm²]	5.490
204.722	J	[kgcm²]	2.860
236.622	J	[kgcm²]	2.650
248.458	J	[kgcm²]	2.060
268.889	J	[kgcm²]	2.650
326.333	J	[kgcm²]	1.920
363.000	J	[kgcm²]	2.450
412.500	J	[kgcm²]	1.780

► The moments of inertia relate to the drive shaft of the gearbox.
► The total moment of inertia is calculated by adding the values of the gearbox, motor and accessories.



Weights, 4-pole motors

1-stage gearboxes

				m500				
				-P132L4	-P132M4	-P160L4	-P160M4	-P180L4 -P180M4
GST	GST06	m	[kg]		71			
	GST07	m	[kg]	92	80			
	GST09	m	[kg]	105	93	155	144	193

2-stage gearboxes

				m500						
				-P132L4	-P132M4	-P160L4	-P160M4	-P180L4 -P180M4	-P180V4	-P225M4
GST	GST06	m	[kg]	89	77					
	GST07	m	[kg]	102	90		142			
	GST09	m	[kg]	126	114	176	165	214		
	GST11	m	[kg]	164	152	214	203	252		
	GST14	m	[kg]	240	228	290	279	328	356	454

3-stage gearboxes

				m500				
				-P132L4	-P132M4	-P160L4	-P160M4	-P180L4 -P180M4
GST	GST09	m	[kg]	138	126			
	GST11	m	[kg]	186	174			
	GST14	m	[kg]	280	268	330	319	368

► Weights with oil filling for mounting position A; all values are approximate.
The weights relate to the basic version. Bear in mind that additional weights may be needed, e.g. for motor options.



Additional weights for gearboxes

Product	Mass	
	Foot	Flange
	m	m
	[kg]	[kg]
GST06	2.70	3.00
GST07	4.40	4.00
GST09	8.50	7.00
GST11	14.9	10.5
GST14	28.0	15.5



Selection tables, 4-pole motors

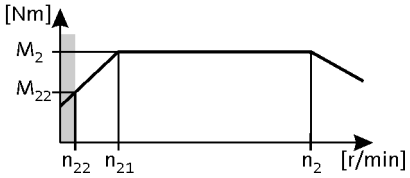

50 Hz: P_N = 5.5 kW
87 Hz: P_N = 9.6 kW

1-stage gearboxes

Mains operation 400 V, 50 Hz			Inverter operation 5 Hz -		- 20 Hz		- 50 Hz (1:10)			- 87 Hz (1:17.4)			i	Product		
n_2 [r/min]	M_2 [Nm]	c	n_{22} [r/min]	M_{22} [Nm]	n_{21} [r/min]	M_2 [Nm]	n_2 [r/min]	M_2 [Nm]	c	n_2 [r/min]	M_2 [Nm]	c		GST	m500	
912	57	1.1	91	35	375	57	912	57	1.1	1579	57	0.9	1.600	GST06	-P132M4	54
898	58	1.8	89	36	369	58	898	58	1.8				1.625	GST07	-P132M4	60
730	71	1.8	73	44	300	71	730	71	1.8				2.000	GST07	-P132M4	60
713	73	1.0	71	45	293	73	713	73	1.0				2.048	GST06	-P132M4	54
651	79	1.7	65	49	268	79	651	79	1.7				2.240	GST07	-P132M4	60
651	79	1.0	65	49	268	79	651	79	1.0				2.240	GST06	-P132M4	54
511	101	1.6	51	63	210	101	511	101	1.6				2.857	GST07	-P132M4	60
511	101	0.9	51	63	210	101	511	101	0.9				2.857	GST06	-P132M4	54
417	124	1.4	41	77	171	124	417	124	1.4				3.500	GST07	-P132M4	60
417	124	0.8	41	77	171	124	417	124	0.8				3.500	GST06	-P132M4	54
320	162	1.2	32	100	132	162	320	162	1.2				4.556	GST07	-P132M4	60
313	165	2.3	31	103	129	165	313	165	2.3				4.667	GST09	-P132M4	66
258	201	2.3	26	125	106	201	258	201	2.3				5.667	GST09	-P132M4	66

2-stage gearboxes

Mains operation 400 V, 50 Hz			Inverter operation 5 Hz -		- 20 Hz		- 50 Hz (1:10)			- 87 Hz (1:17.4)			i	Product		
n_2 [r/min]	M_2 [Nm]	c	n_{22} [r/min]	M_{22} [Nm]	n_{21} [r/min]	M_2 [Nm]	n_2 [r/min]	M_2 [Nm]	c	n_2 [r/min]	M_2 [Nm]	c		GST	m500	
481	106	1.6	48	66	198	106	481	106	1.6				3.033	GST06	-P132M4	57
438	116	1.5	44	72	180	116	438	116	1.5				3.333	GST06	-P132M4	57
436	117	3.1	43	73	179	117	436	117	3.1				3.350	GST07	-P132M4	63
351	145	1.3	35	90	144	145	351	145	1.3				4.160	GST06	-P132M4	57
345	148	2.7	34	92	142	148	345	148	2.7				4.225	GST07	-P132M4	63
319	160	1.3	32	99	131	160	319	160	1.3				4.571	GST06	-P132M4	57
314	162	2.6	31	101	129	162	314	162	2.6				4.643	GST07	-P132M4	63
281	182	2.4	28	113	115	182	281	182	2.4				5.200	GST07	-P132M4	63
274	186	1.1	27	115	113	186	274	186	1.1				5.324	GST06	-P132M4	57
255	200	2.3	25	124	105	200	255	200	2.3				5.714	GST07	-P132M4	63
249	204	1.1	25	127	103	204	249	204	1.1				5.850	GST06	-P132M4	57
228	224	1.0	23	139	94	224	228	224	1.0				6.400	GST06	-P132M4	57
228	224	2.1	23	139	94	224	228	224	2.1				6.400	GST07	-P132M4	63
207	246	1.0	21	152	85	246	207	246	1.0				7.040	GST06	-P132M4	57
204	250	2.0	20	155	84	250	204	250	2.0				7.150	GST07	-P132M4	63
180	284	1.9	18	176	74	284	180	284	1.9				8.125	GST07	-P132M4	63
179	285	0.9	18	177	74	285	179	285	0.9				8.163	GST06	-P132M4	57
166	307	1.7	17	191	68	307	166	307	1.7				8.800	GST07	-P132M4	63
162	315	0.8	16	195	67	315	162	315	0.8				9.010	GST06	-P132M4	57
148	344	1.6	15	213	61	344	148	344	1.6				9.856	GST07	-P132M4	63
130	391	1.5	13	243	54	391	130	391	1.5				11.200	GST07	-P132M4	63
125	407	3.0	12	253	51	407	125	407	3.0				11.667	GST09	-P132M4	69



Selection tables, 4-pole motors

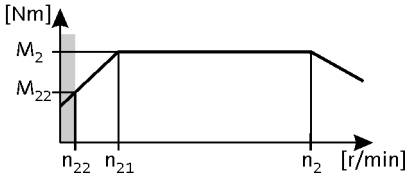

50 Hz: P_N = 5.5 kW
87 Hz: P_N = 9.6 kW

2-stage gearboxes

Mains operation 400 V, 50 Hz			Inverter operation 5 Hz -		- 20 Hz		- 50 Hz (1:10)			- 87 Hz (1:17.4)			i	Product		
n_2 [r/min]	M_2 [Nm]	c	n_{22} [r/min]	M_{22} [Nm]	n_{21} [r/min]	M_2 [Nm]	n_2 [r/min]	M_2 [Nm]	c	n_2 [r/min]	M_2 [Nm]	c		GST	m500	
118	432	2.9	12	268	49	432	118	432	2.9				12.362	GST09	-P132M4	69
116	439	1.4	12	272	48	439	116	439	1.4				12.571	GST07	-P132M4	63
104	491	2.6	10	304	43	491	104	491	2.6				14.048	GST09	-P132M4	69
102	499	1.3	10	309	42	499	102	499	1.3				14.286	GST07	-P132M4	63
96	529	2.5	9.6	328	40	529	96	529	2.5				15.156	GST09	-P132M4	69
95	538	1.2	9.4	333	39	538	95	538	1.2				15.400	GST07	-P132M4	63
85	602	2.3	8.4	373	35	602	85	602	2.3				17.222	GST09	-P132M4	69
83	611	1.1	8.3	379	34	611	83	611	1.1				17.500	GST07	-P132M4	63
73	700	1.0	7.2	434	30	700	73	700	1.0				20.044	GST07	-P132M4	63
71	717	2.1	7.1	445	29	717	71	717	2.1				20.533	GST09	-P132M4	69
64	796	0.9	6.4	493	26	796	64	796	0.9				22.778	GST07	-P132M4	63
63	815	1.9	6.2	505	26	815	63	815	1.9				23.333	GST09	-P132M4	69
59	871	3.2	5.8	540	24	871	59	871	3.2				24.933	GST11	-P132M4	75
59	871	1.8	5.8	540	24	871	59	871	1.8				24.933	GST09	-P132M4	69
52	990	3.0	5.1	613	21	990	52	990	3.0				28.333	GST11	-P132M4	75
52	990	1.5	5.1	613	21	990	52	990	1.5				28.333	GST09	-P132M4	69
45	1127	2.5	4.5	699	19	1127	45	1127	2.5				32.267	GST11	-P132M4	75
40	1281	2.3	4.0	794	16	1281	40	1281	2.3				36.667	GST11	-P132M4	75
37	1368	2.1	3.7	848	15	1368	37	1368	2.1				39.160	GST11	-P132M4	75
33	1554	1.9	3.3	963	14	1554	33	1554	1.9				44.500	GST11	-P132M4	75
30	1729	2.5	2.9	1072	12	1729	30	1729	2.5				49.500	GST14	-P132M4	81
26	1965	2.5	2.6	1218	11	1965	26	1965	2.5				56.250	GST14	-P132M4	81

3-stage gearboxes

Mains operation 400 V, 50 Hz			Inverter operation 5 Hz -		- 20 Hz		- 50 Hz (1:10)			- 87 Hz (1:17.4)			i	Product		
n_2 [r/min]	M_2 [Nm]	c	n_{22} [r/min]	M_{22} [Nm]	n_{21} [r/min]	M_2 [Nm]	n_2 [r/min]	M_2 [Nm]	c	n_2 [r/min]	M_2 [Nm]	c		GST	m500	
36	1381	1.0	3.6	856	15	1381	36	1381	1.0				40.136	GST09	-P132M4	72
36	1382	3.2	3.6	857	15	1382	36	1382	3.2				40.185	GST14	-P132M4	84
36	1404	1.8	3.6	870	15	1404	36	1404	1.8				40.816	GST11	-P132M4	78
34	1465	2.9	3.4	908	14	1465	34	1465	2.9				42.580	GST14	-P132M4	84
34	1488	0.9	3.4	923	14	1488	34	1488	0.9				43.267	GST09	-P132M4	72
33	1514	1.6	3.3	938	14	1514	33	1514	1.6				44.000	GST11	-P132M4	78
30	1665	2.9	3.0	1032	12	1665	30	1665	2.9				48.386	GST14	-P132M4	84
30	1691	0.9	2.9	1048	12	1691	30	1691	0.9				49.167	GST09	-P132M4	72
29	1720	1.6	2.9	1066	12	1720	29	1720	1.6				50.000	GST11	-P132M4	78
28	1828	2.6	2.7	1133	11	1828	28	1828	2.6				53.148	GST14	-P132M4	84
25	1994	1.3	2.5	1236	10	1994	25	1994	1.3				57.968	GST11	-P132M4	78
25	2041	2.6	2.4	1265	10	2041	25	2041	2.6				59.321	GST14	-P132M4	84
24	2107	1.3	2.4	1306	9.8	2107	24	2107	1.3				61.250	GST11	-P132M4	78



Selection tables, 4-pole motors

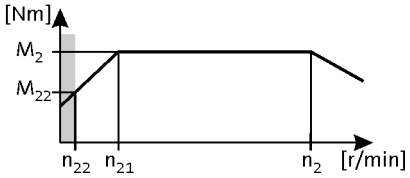

50 Hz: P_N = 5.5 kW
87 Hz: P_N = 9.6 kW

3-stage gearboxes

Mains operation 400 V, 50 Hz			Inverter operation 5 Hz -		- 20 Hz		- 50 Hz (1:10)			- 87 Hz (1:17.4)			i	Product		
n_2 [r/min]	M_2 [Nm]	c	n_{22} [r/min]	M_{22} [Nm]	n_{21} [r/min]	M_2 [Nm]	n_2 [r/min]	M_2 [Nm]	c	n_2 [r/min]	M_2 [Nm]	c		GST	m500	
21	2375	2.1	2.1	1472	8.7	2375	21	2375	2.1				69.042	GST14	-P132M4	84
21	2443	1.1	2.0	1514	8.4	2443	21	2443	1.1				71.011	GST11	-P132M4	78
19	2699	2.1	1.8	1673	7.6	2699	19	2699	2.1				78.457	GST14	-P132M4	84
18	2776	1.0	1.8	1721	7.4	2776	18	2776	1.0				80.694	GST11	-P132M4	78
17	3002	0.9	1.7	1861	6.9	3002	17	3002	0.9				87.267	GST11	-P132M4	78
16	3218	1.7	1.6	1995	6.4	3218	16	3218	1.7				93.541	GST14	-P132M4	84
15	3308	1.8	1.5	2050	6.2	3308	15	3308	1.8				96.157	GST14	-P132M4	84
15	3412	0.8	1.5	2115	6.1	3412	15	3412	0.8				99.167	GST11	-P132M4	78
14	3657	1.6	1.4	2267	5.6	3657	14	3657	1.6				106.296	GST14	-P132M4	84
11	4482	1.3	1.1	2778	4.6	4482	11	4482	1.3				130.278	GST14	-P132M4	84
11	4789	1.2	1.0	2969	4.3	4789	11	4789	1.2				139.211	GST14	-P132M4	84
9.2	5442	1.1	0.9	3373	3.8	5442	9.2	5442	1.1				158.194	GST14	-P132M4	84
8.5	5887	1.0	0.8	3649	3.5	5887	8.5	5887	1.0				171.111	GST14	-P132M4	84



Selection tables, 4-pole motors

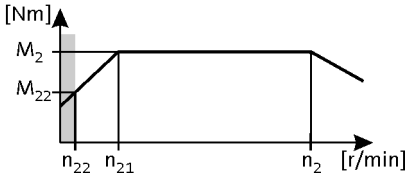

50 Hz: P_N = 7.5 kW
87 Hz: P_N = 13.1 kW

1-stage gearboxes

Mains operation 400 V, 50 Hz			Inverter operation 5 Hz -		- 20 Hz		- 50 Hz (1:10)			- 87 Hz (1:17.4)			i	Product		
n_2 [r/min]	M_2 [Nm]	c	n_{22} [r/min]	M_{22} [Nm]	n_{21} [r/min]	M_2 [Nm]	n_2 [r/min]	M_2 [Nm]	c	n_2 [r/min]	M_2 [Nm]	c		GST	m500	
897	79	1.4	89	49	369	79	897	79	1.4				1.625	GST07	-P132L4	60
729	97	1.3	73	61	300	97	729	97	1.3				2.000	GST07	-P132L4	60
651	108	1.2	65	68	268	108	651	108	1.2				2.240	GST07	-P132L4	60
519	136	3.1	52	85	214	136	519	136	3.1				2.810	GST09	-P132L4	66
510	138	1.2	51	86	210	138	510	138	1.2				2.857	GST07	-P132L4	60
423	167	2.7	42	104	174	167	423	167	2.7				3.444	GST09	-P132L4	66
417	169	1.0	41	106	171	169	417	169	1.0				3.500	GST07	-P132L4	60
320	220	0.8	32	138	132	220	320	220	0.8				4.556	GST07	-P132L4	60
312	226	1.7	31	141	129	226	312	226	1.7				4.667	GST09	-P132L4	66
257	274	1.7	26	171	106	274	257	274	1.7				5.667	GST09	-P132L4	66

2-stage gearboxes

Mains operation 400 V, 50 Hz			Inverter operation 5 Hz -		- 20 Hz		- 50 Hz (1:10)			- 87 Hz (1:17.4)			i	Product		
n_2 [r/min]	M_2 [Nm]	c	n_{22} [r/min]	M_{22} [Nm]	n_{21} [r/min]	M_2 [Nm]	n_2 [r/min]	M_2 [Nm]	c	n_2 [r/min]	M_2 [Nm]	c		GST	m500	
481	145	1.2	48	90	198	145	481	145	1.2				3.033	GST06	-P132L4	57
478	145	2.4	48	91	197	145	478	145	2.4				3.048	GST07	-P132L4	63
437	159	1.1	44	99	180	159	437	159	1.1				3.333	GST06	-P132L4	57
435	160	2.3	43	100	179	160	435	160	2.3				3.350	GST07	-P132L4	63
351	198	1.0	35	124	144	198	351	198	1.0				4.160	GST06	-P132L4	57
345	201	2.0	34	126	142	201	345	201	2.0				4.225	GST07	-P132L4	63
319	218	0.9	32	136	131	218	319	218	0.9				4.571	GST06	-P132L4	57
314	221	1.9	31	138	129	221	314	221	1.9				4.643	GST07	-P132L4	63
280	248	1.7	28	155	115	248	280	248	1.7				5.200	GST07	-P132L4	63
274	254	0.8	27	159	113	254	274	254	0.8				5.324	GST06	-P132L4	57
255	272	1.7	25	170	105	272	255	272	1.7				5.714	GST07	-P132L4	63
228	305	1.5	23	191	94	305	228	305	1.5				6.400	GST07	-P132L4	63
204	341	1.4	20	213	84	341	204	341	1.4				7.150	GST07	-P132L4	63
200	348	3.2	20	218	82	348	200	348	3.2				7.305	GST09	-P132L4	69
182	383	3.0	18	239	75	383	182	383	3.0				8.027	GST09	-P132L4	69
179	387	1.4	18	242	74	387	179	387	1.4				8.125	GST07	-P132L4	63
166	419	1.3	17	262	68	419	166	419	1.3				8.800	GST07	-P132L4	63
162	429	2.6	16	268	67	429	162	429	2.6				9.010	GST09	-P132L4	69
148	470	1.2	15	294	61	470	148	470	1.2				9.856	GST07	-P132L4	63
142	489	2.4	14	306	58	489	142	489	2.4				10.267	GST09	-P132L4	69
130	534	1.1	13	334	54	534	130	534	1.1				11.200	GST07	-P132L4	63
125	556	2.2	12	347	51	556	125	556	2.2				11.667	GST09	-P132L4	69
118	589	2.1	12	368	49	589	118	589	2.1				12.362	GST09	-P132L4	69
116	599	1.0	12	374	48	599	116	599	1.0				12.571	GST07	-P132L4	63
104	669	1.9	10	418	43	669	104	669	1.9				14.048	GST09	-P132L4	69



Selection tables, 4-pole motors

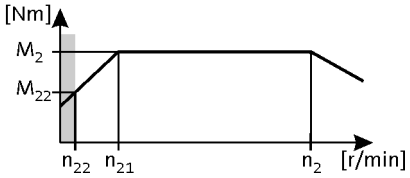

50 Hz: P_N = 7.5 kW
87 Hz: P_N = 13.1 kW

2-stage gearboxes

Mains operation 400 V, 50 Hz			Inverter operation 5 Hz -		- 20 Hz		- 50 Hz (1:10)			- 87 Hz (1:17.4)			i	Product		
n_2 [r/min]	M_2 [Nm]	c	n_{22} [r/min]	M_{22} [Nm]	n_{21} [r/min]	M_2 [Nm]	n_2 [r/min]	M_2 [Nm]	c	n_2 [r/min]	M_2 [Nm]	c		GST	m500	
102	681	0.9	10	425	42	681	102	681	0.9				14.286	GST07	-P132L4	63
96	722	1.9	9.6	451	40	722	96	722	1.9				15.156	GST09	-P132L4	69
95	734	0.9	9.4	459	39	734	95	734	0.9				15.400	GST07	-P132L4	63
85	821	1.7	8.4	513	35	821	85	821	1.7				17.222	GST09	-P132L4	69
83	834	0.8	8.3	521	34	834	83	834	0.8				17.500	GST07	-P132L4	63
72	967	2.9	7.1	604	30	967	72	967	2.9				20.289	GST11	-P132L4	75
71	979	1.5	7.1	611	29	979	71	979	1.5				20.533	GST09	-P132L4	69
63	1099	2.7	6.3	687	26	1099	63	1099	2.7				23.056	GST11	-P132L4	75
63	1112	1.4	6.2	695	26	1112	63	1112	1.4				23.333	GST09	-P132L4	69
59	1188	2.3	5.8	742	24	1188	59	1188	2.3				24.933	GST11	-P132L4	75
59	1188	1.3	5.8	742	24	1188	59	1188	1.3				24.933	GST09	-P132L4	69
52	1350	2.2	5.1	844	21	1350	52	1350	2.2				28.333	GST11	-P132L4	75
52	1350	1.1	5.1	844	21	1350	52	1350	1.1				28.333	GST09	-P132L4	69
45	1538	1.8	4.5	961	19	1538	45	1538	1.8				32.267	GST11	-P132L4	75
45	1538	3.1	4.5	961	19	1538	45	1538	3.1				32.267	GST14	-P132L4	81
40	1748	1.7	4.0	1092	16	1748	40	1748	1.7				36.667	GST11	-P132L4	75
40	1748	3.1	4.0	1092	16	1748	40	1748	3.1				36.667	GST14	-P132L4	81
37	1866	2.6	3.7	1166	15	1866	37	1866	2.6				39.160	GST14	-P132L4	81
33	2121	2.6	3.3	1325	14	2121	33	2121	2.6				44.500	GST14	-P132L4	81

3-stage gearboxes

Mains operation 400 V, 50 Hz			Inverter operation 5 Hz -		- 20 Hz		- 50 Hz (1:10)			- 87 Hz (1:17.4)			i	Product		
n_2 [r/min]	M_2 [Nm]	c	n_{22} [r/min]	M_{22} [Nm]	n_{21} [r/min]	M_2 [Nm]	n_2 [r/min]	M_2 [Nm]	c	n_2 [r/min]	M_2 [Nm]	c		GST	m500	
36	1886	2.4	3.6	1179	15	1886	36	1886	2.4				40.185	GST14	-P132L4	84
36	1916	1.3	3.6	1197	15	1916	36	1916	1.3				40.816	GST11	-P132L4	78
34	1999	2.1	3.4	1249	14	1999	34	1999	2.1				42.580	GST14	-P132L4	84
33	2066	1.2	3.3	1290	14	2066	33	2066	1.2				44.000	GST11	-P132L4	78
30	2271	2.1	3.0	1419	12	2271	30	2271	2.1				48.386	GST14	-P132L4	84
29	2347	1.2	2.9	1466	12	2347	29	2347	1.2				50.000	GST11	-P132L4	78
27	2495	1.9	2.7	1559	11	2495	27	2495	1.9				53.148	GST14	-P132L4	84
25	2721	1.0	2.5	1700	10	2721	25	2721	1.0				57.968	GST11	-P132L4	78
25	2785	1.9	2.4	1740	10	2785	25	2785	1.9				59.321	GST14	-P132L4	84
24	2875	1.0	2.4	1796	9.8	2875	24	2875	1.0				61.250	GST11	-P132L4	78
21	3241	1.5	2.1	2025	8.7	3241	21	3241	1.5				69.042	GST14	-P132L4	84
19	3683	1.5	1.8	2301	7.6	3683	19	3683	1.5				78.457	GST14	-P132L4	84
16	4391	1.3	1.6	2743	6.4	4391	16	4391	1.3				93.541	GST14	-P132L4	84
15	4514	1.3	1.5	2820	6.2	4514	15	4514	1.3				96.157	GST14	-P132L4	84
14	4990	1.2	1.4	3117	5.6	4990	14	4990	1.2				106.296	GST14	-P132L4	84
11	6116	1.0	1.1	3821	4.6	6116	11	6116	1.0				130.278	GST14	-P132L4	84



Selection tables, 4-pole motors

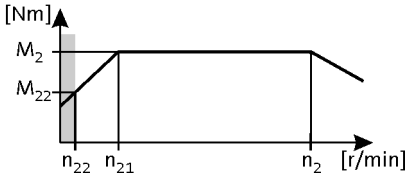

50 Hz: P_N = 7.5 kW
87 Hz: P_N = 13.1 kW

3-stage gearboxes

Mains operation 400 V, 50 Hz			Inverter operation 5 Hz -		- 20 Hz		- 50 Hz (1:10)			- 87 Hz (1:17.4)			i	Product		
n_2 [r/min]	M_2 [Nm]	c	n_{22} [r/min]	M_{22} [Nm]	n_{21} [r/min]	M_2 [Nm]	n_2 [r/min]	M_2 [Nm]	c	n_2 [r/min]	M_2 [Nm]	c		GST	m500	
11	6535	0.9	1.0	4083	4.3	6535	11	6535	0.9				139.211	GST14	-P132L4	84



Selection tables, 4-pole motors

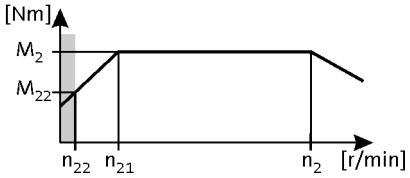

50 Hz: P_N = 11.0 kW
87 Hz: P_N = 19.2 kW

1-stage gearboxes

Mains operation 400 V, 50 Hz			Inverter operation 5 Hz -		- 20 Hz		- 50 Hz (1:10)			- 87 Hz (1:17.4)			i	Product		
n_2 [r/min]	M_2 [Nm]	c	n_{22} [r/min]	M_{22} [Nm]	n_{21} [r/min]	M_2 [Nm]	n_2 [r/min]	M_2 [Nm]	c	n_2 [r/min]	M_2 [Nm]	c		GST	m500	
944	110	2.5	93	60	385	110	944	110	2.5				1.560	GST09	-P160M4	66
719	144	2.4	71	79	293	144	719	144	2.4				2.048	GST09	-P160M4	66
631	164	2.3	62	90	257	164	631	164	2.3				2.333	GST09	-P160M4	66
524	197	2.1	52	109	214	197	524	197	2.1				2.810	GST09	-P160M4	66
428	242	1.8	42	133	174	242	428	242	1.8				3.444	GST09	-P160M4	66

2-stage gearboxes

Mains operation 400 V, 50 Hz			Inverter operation 5 Hz -		- 20 Hz		- 50 Hz (1:10)			- 87 Hz (1:17.4)			i	Product		
n_2 [r/min]	M_2 [Nm]	c	n_{22} [r/min]	M_{22} [Nm]	n_{21} [r/min]	M_2 [Nm]	n_2 [r/min]	M_2 [Nm]	c	n_2 [r/min]	M_2 [Nm]	c		GST	m500	
483	211	1.7	48	116	197	211	483	211	1.7				3.048	GST07	-P160M4	63
440	232	1.6	43	128	179	232	440	232	1.6				3.350	GST07	-P160M4	63
363	281	3.1	36	155	148	281	363	281	3.1				4.056	GST09	-P160M4	69
349	292	1.4	34	161	142	292	349	292	1.4				4.225	GST07	-P160M4	63
331	308	3.0	33	170	135	308	331	308	3.0				4.457	GST09	-P160M4	69
317	321	1.3	31	177	129	321	317	321	1.3				4.643	GST07	-P160M4	63
283	360	1.2	28	198	115	360	283	360	1.2				5.200	GST07	-P160M4	63
277	368	2.7	27	203	113	368	277	368	2.7				5.324	GST09	-P160M4	69
258	395	1.1	25	218	105	395	258	395	1.1				5.714	GST07	-P160M4	63
252	405	2.5	25	223	103	405	252	405	2.5				5.850	GST09	-P160M4	69
230	443	1.1	23	244	94	443	230	443	1.1				6.400	GST07	-P160M4	63
221	461	2.3	22	254	90	461	221	461	2.3				6.667	GST09	-P160M4	69
202	505	2.2	20	279	82	505	202	505	2.2				7.305	GST09	-P160M4	69
184	555	2.0	18	306	75	555	184	555	2.0				8.027	GST09	-P160M4	69
164	623	1.8	16	344	67	623	164	623	1.8				9.010	GST09	-P160M4	69
144	710	1.7	14	392	58	710	144	710	1.7				10.267	GST09	-P160M4	69
132	775	3.1	13	427	54	775	132	775	3.1				11.200	GST11	-P160M4	75
126	807	1.5	12	445	51	807	126	807	1.5				11.667	GST09	-P160M4	69
119	855	1.5	12	472	49	855	119	855	1.5				12.362	GST09	-P160M4	69
117	870	2.9	12	480	48	870	117	870	2.9				12.571	GST11	-P160M4	75
105	972	1.3	10	536	43	972	105	972	1.3				14.048	GST09	-P160M4	69
103	988	2.6	10	545	42	988	103	988	2.6				14.286	GST11	-P160M4	75
97	1049	1.3	9.6	578	40	1049	97	1049	1.3				15.156	GST09	-P160M4	69
96	1066	2.5	9.4	588	39	1066	96	1066	2.5				15.400	GST11	-P160M4	75
86	1192	1.2	8.4	657	35	1192	86	1192	1.2				17.222	GST09	-P160M4	69
84	1211	2.3	8.3	668	34	1211	84	1211	2.3				17.500	GST11	-P160M4	75
73	1404	2.0	7.1	774	30	1404	73	1404	2.0				20.289	GST11	-P160M4	75
65	1576	3.2	6.4	869	26	1576	65	1576	3.2				22.778	GST14	-P160M4	81
64	1595	1.8	6.3	880	26	1595	64	1595	1.8				23.056	GST11	-P160M4	75
60	1700	3.1	5.9	937	24	1700	60	1700	3.1				24.567	GST14	-P160M4	81



Selection tables, 4-pole motors

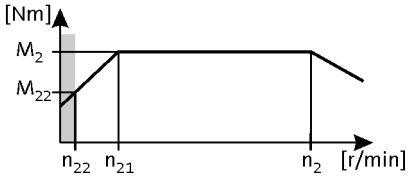

50 Hz: P_N = 11.0 kW
87 Hz: P_N = 19.2 kW

2-stage gearboxes

Mains operation 400 V, 50 Hz			Inverter operation 5 Hz -		- 20 Hz		- 50 Hz (1:10)			- 87 Hz (1:17.4)			i	Product		
n_2 [r/min]	M_2 [Nm]	c	n_{22} [r/min]	M_{22} [Nm]	n_{21} [r/min]	M_2 [Nm]	n_2 [r/min]	M_2 [Nm]	c	n_2 [r/min]	M_2 [Nm]	c		GST	m500	
59	1725	1.6	5.8	951	24	1725	59	1725	1.6				24.933	GST11	-P160M4	75
53	1932	2.8	5.2	1065	22	1932	53	1932	2.8				27.917	GST14	-P160M4	81
52	1960	1.5	5.1	1081	21	1960	52	1960	1.5				28.333	GST11	-P160M4	75
46	2232	2.4	4.5	1231	19	2232	46	2232	2.4				32.267	GST14	-P160M4	81
40	2537	2.3	4.0	1399	16	2537	40	2537	2.3				36.667	GST14	-P160M4	81
38	2709	2.0	3.7	1494	15	2709	38	2709	2.0				39.160	GST14	-P160M4	81
33	3079	1.9	3.3	1698	14	3079	33	3079	1.9				44.500	GST14	-P160M4	81

3-stage gearboxes

Mains operation 400 V, 50 Hz			Inverter operation 5 Hz -		- 20 Hz		- 50 Hz (1:10)			- 87 Hz (1:17.4)			i	Product		
n_2 [r/min]	M_2 [Nm]	c	n_{22} [r/min]	M_{22} [Nm]	n_{21} [r/min]	M_2 [Nm]	n_2 [r/min]	M_2 [Nm]	c	n_2 [r/min]	M_2 [Nm]	c		GST	m500	
37	2739	1.6	3.6	1510	15	2739	37	2739	1.6				40.185	GST14	-P160M4	84
35	2902	1.5	3.4	1600	14	2902	35	2902	1.5				42.580	GST14	-P160M4	84
30	3298	1.5	3.0	1818	12	3298	30	3298	1.5				48.386	GST14	-P160M4	84
28	3622	1.3	2.7	1997	11	3622	28	3622	1.3				53.148	GST14	-P160M4	84
25	4043	1.3	2.4	2229	10	4043	25	4043	1.3				59.321	GST14	-P160M4	84
21	4705	1.0	2.1	2595	8.7	4705	21	4705	1.0				69.042	GST14	-P160M4	84
19	5347	1.0	1.8	2949	7.6	5347	19	5347	1.0				78.457	GST14	-P160M4	84
15	6553	0.9	1.5	3614	6.2	6553	15	6553	0.9				96.157	GST14	-P160M4	84



Selection tables, 4-pole motors

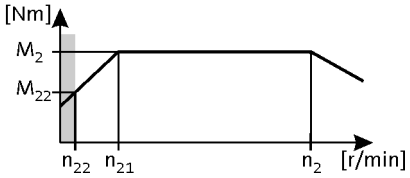

50 Hz: P_N = 15.0 kW
87 Hz: P_N = 26.2 kW

1-stage gearboxes

Mains operation 400 V, 50 Hz			Inverter operation 5 Hz -		- 20 Hz		- 50 Hz (1:10)			- 87 Hz (1:17.4)			i	Product		
n_2 [r/min]	M_2 [Nm]	c	n_{22} [r/min]	M_{22} [Nm]	n_{21} [r/min]	M_2 [Nm]	n_2 [r/min]	M_2 [Nm]	c	n_2 [r/min]	M_2 [Nm]	c		GST	m500	
946	149	1.9	93	82	385	149	946	149	1.9				1.560	GST09	-P160L4	66
720	196	1.7	71	108	293	196	720	196	1.7				2.048	GST09	-P160L4	66
632	223	1.7	62	123	257	223	632	223	1.7				2.333	GST09	-P160L4	66
525	269	1.6	52	148	214	269	525	269	1.6				2.810	GST09	-P160L4	66
428	329	1.3	42	182	174	329	428	329	1.3				3.444	GST09	-P160L4	66

2-stage gearboxes

Mains operation 400 V, 50 Hz			Inverter operation 5 Hz -		- 20 Hz		- 50 Hz (1:10)			- 87 Hz (1:17.4)			i	Product		
n_2 [r/min]	M_2 [Nm]	c	n_{22} [r/min]	M_{22} [Nm]	n_{21} [r/min]	M_2 [Nm]	n_2 [r/min]	M_2 [Nm]	c	n_2 [r/min]	M_2 [Nm]	c		GST	m500	
364	382	2.3	36	211	148	382	364	382	2.3				4.056	GST09	-P160L4	69
331	420	2.2	33	232	135	420	331	420	2.2				4.457	GST09	-P160L4	69
277	502	3.2	27	277	113	502	277	502	3.2				5.324	GST11	-P160L4	75
277	502	2.0	27	277	113	502	277	502	2.0				5.324	GST09	-P160L4	69
252	551	3.2	25	304	103	551	252	551	3.2				5.850	GST11	-P160L4	75
252	551	1.9	25	304	103	551	252	551	1.9				5.850	GST09	-P160L4	69
231	603	3.0	23	333	94	603	231	603	3.0				6.400	GST11	-P160L4	75
221	628	1.7	22	347	90	628	221	628	1.7				6.667	GST09	-P160L4	69
215	647	3.2	21	357	87	647	215	647	3.2				6.864	GST11	-P160L4	75
202	688	1.6	20	380	82	688	202	688	1.6				7.305	GST09	-P160L4	69
189	735	2.9	19	405	77	735	189	735	2.9				7.800	GST11	-P160L4	75
164	849	2.7	16	468	67	849	164	849	2.7				9.010	GST11	-P160L4	75
164	849	1.3	16	468	67	849	164	849	1.3				9.010	GST09	-P160L4	69
150	929	2.5	15	512	61	929	150	929	2.5				9.856	GST11	-P160L4	75
144	967	1.2	14	534	58	967	144	967	1.2				10.267	GST09	-P160L4	69
132	1055	2.3	13	582	54	1055	132	1055	2.3				11.200	GST11	-P160L4	75
126	1099	1.1	12	606	51	1099	126	1099	1.1				11.667	GST09	-P160L4	69
119	1165	1.1	12	643	49	1165	119	1165	1.1				12.362	GST09	-P160L4	69
117	1184	2.1	12	653	48	1184	117	1184	2.1				12.571	GST11	-P160L4	75
105	1324	3.2	10	730	43	1324	105	1324	3.2				14.048	GST14	-P160L4	81
105	1324	1.0	10	730	43	1324	105	1324	1.0				14.048	GST09	-P160L4	69
103	1346	1.9	10	743	42	1346	103	1346	1.9				14.286	GST11	-P160L4	75
97	1428	3.1	9.6	788	40	1428	97	1428	3.1				15.156	GST14	-P160L4	81
97	1428	0.9	9.6	788	40	1428	97	1428	0.9				15.156	GST09	-P160L4	69
96	1451	1.9	9.4	800	39	1451	96	1451	1.9				15.400	GST11	-P160L4	75
86	1623	2.8	8.4	895	35	1623	86	1623	2.8				17.222	GST14	-P160L4	81
86	1623	0.9	8.4	895	35	1623	86	1623	0.9				17.222	GST09	-P160L4	69
84	1649	1.7	8.3	910	34	1649	84	1649	1.7				17.500	GST11	-P160L4	75
74	1889	2.6	7.2	1042	30	1889	74	1889	2.6				20.044	GST14	-P160L4	81
73	1912	1.4	7.1	1055	30	1912	73	1912	1.4				20.289	GST11	-P160L4	75



Selection tables, 4-pole motors

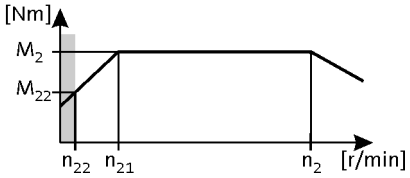

50 Hz: P_N = 15.0 kW
87 Hz: P_N = 26.2 kW

2-stage gearboxes

Mains operation 400 V, 50 Hz			Inverter operation 5 Hz -		- 20 Hz		- 50 Hz (1:10)			- 87 Hz (1:17.4)			i	Product		
n_2 [r/min]	M_2 [Nm]	c	n_{22} [r/min]	M_{22} [Nm]	n_{21} [r/min]	M_2 [Nm]	n_2 [r/min]	M_2 [Nm]	c	n_2 [r/min]	M_2 [Nm]	c		GST	m500	
65	2146	2.3	6.4	1184	26	2146	65	2146	2.3				22.778	GST14	-P160L4	81
64	2172	1.3	6.3	1198	26	2172	64	2172	1.3				23.056	GST11	-P160L4	75
60	2315	2.3	5.9	1277	24	2315	60	2315	2.3				24.567	GST14	-P160L4	81
59	2349	1.2	5.8	1296	24	2349	59	2349	1.2				24.933	GST11	-P160L4	75
53	2630	2.0	5.2	1451	22	2630	53	2630	2.0				27.917	GST14	-P160L4	81
52	2670	1.1	5.1	1473	21	2670	52	2670	1.1				28.333	GST11	-P160L4	75
46	3040	1.8	4.5	1677	19	3040	46	3040	1.8				32.267	GST14	-P160L4	81
40	3455	1.7	4.0	1906	16	3455	40	3455	1.7				36.667	GST14	-P160L4	81
38	3690	1.5	3.7	2035	15	3690	38	3690	1.5				39.160	GST14	-P160L4	81
33	4193	1.4	3.3	2313	14	4193	33	4193	1.4				44.500	GST14	-P160L4	81

3-stage gearboxes

Mains operation 400 V, 50 Hz			Inverter operation 5 Hz -		- 20 Hz		- 50 Hz (1:10)			- 87 Hz (1:17.4)			i	Product		
n_2 [r/min]	M_2 [Nm]	c	n_{22} [r/min]	M_{22} [Nm]	n_{21} [r/min]	M_2 [Nm]	n_2 [r/min]	M_2 [Nm]	c	n_2 [r/min]	M_2 [Nm]	c		GST	m500	
37	3729	1.2	3.6	2057	15	3729	37	3729	1.2				40.185	GST14	-P160L4	84
35	3952	1.1	3.4	2180	14	3952	35	3952	1.1				42.580	GST14	-P160L4	84
31	4491	1.1	3.0	2477	12	4491	31	4491	1.1				48.386	GST14	-P160L4	84
28	4933	1.0	2.7	2721	11	4933	28	4933	1.0				53.148	GST14	-P160L4	84
25	5505	1.0	2.4	3037	10	5505	25	5505	1.0				59.321	GST14	-P160L4	84



Selection tables, 4-pole motors

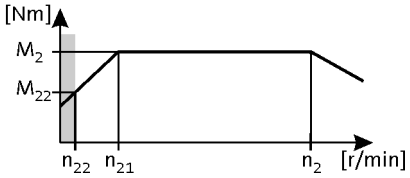

50 Hz: P_N = 18.5 kW
87 Hz: P_N = 32.5 kW

1-stage gearboxes

Mains operation 400 V, 50 Hz			Inverter operation 5 Hz -		- 20 Hz		- 50 Hz (1:10)			- 87 Hz (1:17.4)			i	Product		
n_2 [r/min]	M_2 [Nm]	c	n_{22} [r/min]	M_{22} [Nm]	n_{21} [r/min]	M_2 [Nm]	n_2 [r/min]	M_2 [Nm]	c	n_2 [r/min]	M_2 [Nm]	c		GST	m500	
720	242	1.4	71	133	293	242	720	242	1.4				2.048	GST09	-P180M4	66
632	275	1.3	62	151	257	275	632	275	1.3				2.333	GST09	-P180M4	66
525	332	1.3	52	182	214	332	525	332	1.3				2.810	GST09	-P180M4	66
428	407	1.1	42	224	174	407	428	407	1.1				3.444	GST09	-P180M4	66

2-stage gearboxes

Mains operation 400 V, 50 Hz			Inverter operation 5 Hz -		- 20 Hz		- 50 Hz (1:10)			- 87 Hz (1:17.4)			i	Product		
n_2 [r/min]	M_2 [Nm]	c	n_{22} [r/min]	M_{22} [Nm]	n_{21} [r/min]	M_2 [Nm]	n_2 [r/min]	M_2 [Nm]	c	n_2 [r/min]	M_2 [Nm]	c		GST	m500	
363	472	3.2	36	259	148	472	363	472	3.2				4.056	GST11	-P180M4	75
363	472	1.9	36	259	148	472	363	472	1.9				4.056	GST09	-P180M4	69
331	518	3.1	33	285	135	518	331	518	3.1				4.457	GST11	-P180M4	75
331	518	1.8	33	285	135	518	331	518	1.8				4.457	GST09	-P180M4	69
277	619	2.6	27	340	113	619	277	619	2.6				5.324	GST11	-P180M4	75
277	619	1.6	27	340	113	619	277	619	1.6				5.324	GST09	-P180M4	69
252	680	2.6	25	374	103	680	252	680	2.6				5.850	GST11	-P180M4	75
252	680	1.5	25	374	103	680	252	680	1.5				5.850	GST09	-P180M4	69
230	744	2.4	23	409	94	744	230	744	2.4				6.400	GST11	-P180M4	75
221	775	1.4	22	426	90	775	221	775	1.4				6.667	GST09	-P180M4	69
202	849	1.3	20	467	82	849	202	849	1.3				7.305	GST09	-P180M4	69
184	933	1.2	18	513	75	933	184	933	1.2				8.027	GST09	-P180M4	69
164	1048	2.2	16	576	67	1048	164	1048	2.2				9.010	GST11	-P180M4	75
150	1144	3.1	15	629	61	1144	150	1144	3.1				9.841	GST14	-P180M4	81
150	1146	2.0	15	630	61	1146	150	1146	2.0				9.856	GST11	-P180M4	75
134	1279	3.1	13	703	55	1279	134	1279	3.1				11.000	GST14	-P180M4	81
132	1302	1.8	13	716	54	1302	132	1302	1.8				11.200	GST11	-P180M4	75
119	1437	2.9	12	790	49	1437	119	1437	2.9				12.362	GST14	-P180M4	81
117	1462	1.7	12	804	48	1462	117	1462	1.7				12.571	GST11	-P180M4	75
105	1634	2.6	10	898	43	1634	105	1634	2.6				14.048	GST14	-P180M4	81
103	1661	1.6	10	913	42	1661	103	1661	1.6				14.286	GST11	-P180M4	75
97	1762	2.5	9.6	969	40	1762	97	1762	2.5				15.156	GST14	-P180M4	81
96	1791	1.5	9.4	985	39	1791	96	1791	1.5				15.400	GST11	-P180M4	75
86	2003	2.3	8.4	1101	35	2003	86	2003	2.3				17.222	GST14	-P180M4	81
84	2035	1.4	8.3	1119	34	2035	84	2035	1.4				17.500	GST11	-P180M4	75
74	2331	2.1	7.2	1281	30	2331	74	2331	2.1				20.044	GST14	-P180M4	81
73	2359	1.2	7.1	1297	30	2359	73	2359	1.2				20.289	GST11	-P180M4	75
65	2649	1.9	6.4	1456	26	2649	65	2649	1.9				22.778	GST14	-P180M4	81
64	2681	1.1	6.3	1474	26	2681	64	2681	1.1				23.056	GST11	-P180M4	75
60	2857	1.8	5.9	1571	24	2857	60	2857	1.8				24.567	GST14	-P180M4	81
59	2899	1.0	5.8	1594	24	2899	59	2899	1.0				24.933	GST11	-P180M4	75



Selection tables, 4-pole motors

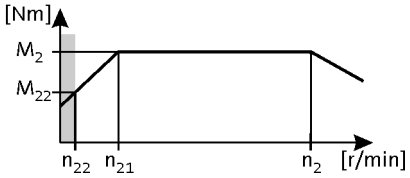

50 Hz: P_N = 18.5 kW
87 Hz: P_N = 32.5 kW

2-stage gearboxes

Mains operation 400 V, 50 Hz			Inverter operation 5 Hz -		- 20 Hz		- 50 Hz (1:10)			- 87 Hz (1:17.4)			i	Product		
n_2 [r/min]	M_2 [Nm]	c	n_{22} [r/min]	M_{22} [Nm]	n_{21} [r/min]	M_2 [Nm]	n_2 [r/min]	M_2 [Nm]	c	n_2 [r/min]	M_2 [Nm]	c		GST	m500	
53	3246	1.7	5.2	1785	22	3246	53	3246	1.7				27.917	GST14	-P180M4	81
52	3295	0.9	5.1	1811	21	3295	52	3295	0.9				28.333	GST11	-P180M4	75
46	3752	1.5	4.5	2063	19	3752	46	3752	1.5				32.267	GST14	-P180M4	81
40	4264	1.4	4.0	2344	16	4264	40	4264	1.4				36.667	GST14	-P180M4	81

3-stage gearboxes

Mains operation 400 V, 50 Hz			Inverter operation 5 Hz -		- 20 Hz		- 50 Hz (1:10)			- 87 Hz (1:17.4)			i	Product		
n_2 [r/min]	M_2 [Nm]	c	n_{22} [r/min]	M_{22} [Nm]	n_{21} [r/min]	M_2 [Nm]	n_2 [r/min]	M_2 [Nm]	c	n_2 [r/min]	M_2 [Nm]	c		GST	m500	
37	4603	1.0	3.6	2530	15	4603	37	4603	1.0				40.185	GST14	-P180M4	84
35	4877	0.9	3.4	2681	14	4877	35	4877	0.9				42.580	GST14	-P180M4	84
31	5542	0.9	3.0	3047	12	5542	31	5542	0.9				48.386	GST14	-P180M4	84



Selection tables, 4-pole motors

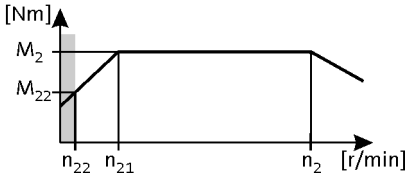

50 Hz: P_N = 22.0 kW
87 Hz: P_N = 38.1 kW

1-stage gearboxes

Mains operation 400 V, 50 Hz			Inverter operation 5 Hz -		- 20 Hz		- 50 Hz (1:10)			- 87 Hz (1:17.4)			i	Product		
n_2 [r/min]	M_2 [Nm]	c	n_{22} [r/min]	M_{22} [Nm]	n_{21} [r/min]	M_2 [Nm]	n_2 [r/min]	M_2 [Nm]	c	n_2 [r/min]	M_2 [Nm]	c		GST	m500	
633	327	1.1	62	181	257	327	633	327	1.1				2.333	GST09	-P180L4	66
526	393	1.1	52	218	214	393	526	393	1.1				2.810	GST09	-P180L4	66
429	482	0.9	42	267	174	482	429	482	0.9				3.444	GST09	-P180L4	66

2-stage gearboxes

Mains operation 400 V, 50 Hz			Inverter operation 5 Hz -		- 20 Hz		- 50 Hz (1:10)			- 87 Hz (1:17.4)			i	Product		
n_2 [r/min]	M_2 [Nm]	c	n_{22} [r/min]	M_{22} [Nm]	n_{21} [r/min]	M_2 [Nm]	n_2 [r/min]	M_2 [Nm]	c	n_2 [r/min]	M_2 [Nm]	c		GST	m500	
278	734	2.2	27	406	113	734	278	734	2.2				5.324	GST11	-P180L4	75
278	734	1.4	27	406	113	734	278	734	1.4				5.324	GST09	-P180L4	69
253	807	2.2	25	446	103	807	253	807	2.2				5.850	GST11	-P180L4	75
235	867	3.1	23	479	96	867	235	867	3.1				6.286	GST14	-P180L4	81
231	883	2.0	23	488	94	883	231	883	2.0				6.400	GST11	-P180L4	75
222	919	1.2	22	508	90	919	222	919	1.2				6.667	GST09	-P180L4	69
202	1007	1.1	20	557	82	1007	202	1007	1.1				7.305	GST09	-P180L4	69
184	1107	2.9	18	612	75	1107	184	1107	2.9				8.027	GST14	-P180L4	81
184	1107	1.0	18	612	75	1107	184	1107	1.0				8.027	GST09	-P180L4	69
164	1242	1.8	16	687	67	1242	164	1242	1.8				9.010	GST11	-P180L4	75
150	1357	2.6	15	750	61	1357	150	1357	2.6				9.841	GST14	-P180L4	81
150	1359	1.7	15	752	61	1359	150	1359	1.7				9.856	GST11	-P180L4	75
120	1705	2.5	12	943	49	1705	120	1705	2.5				12.362	GST14	-P180L4	81
118	1734	1.5	12	959	48	1734	118	1734	1.5				12.571	GST11	-P180L4	75
105	1937	2.2	10	1071	43	1937	105	1937	2.2				14.048	GST14	-P180L4	81
104	1970	1.3	10	1089	42	1970	104	1970	1.3				14.286	GST11	-P180L4	75
98	2090	2.1	9.6	1156	40	2090	98	2090	2.1				15.156	GST14	-P180L4	81
96	2124	1.3	9.4	1174	39	2124	96	2124	1.3				15.400	GST11	-P180L4	75
86	2375	1.9	8.4	1313	35	2375	86	2375	1.9				17.222	GST14	-P180L4	81
85	2413	1.1	8.3	1335	34	2413	85	2413	1.1				17.500	GST11	-P180L4	75
74	2764	1.8	7.2	1529	30	2764	74	2764	1.8				20.044	GST14	-P180L4	81
73	2798	1.0	7.1	1547	30	2798	73	2798	1.0				20.289	GST11	-P180L4	75
65	3141	1.6	6.4	1737	26	3141	65	3141	1.6				22.778	GST14	-P180L4	81
64	3180	0.9	6.3	1758	26	3180	64	3180	0.9				23.056	GST11	-P180L4	75
60	3388	1.6	5.9	1873	24	3388	60	3388	1.6				24.567	GST14	-P180L4	81
59	3439	0.8	5.8	1901	24	3439	59	3439	0.8				24.933	GST11	-P180L4	75
53	3850	1.4	5.2	2129	22	3850	53	3850	1.4				27.917	GST14	-P180L4	81
46	4450	1.2	4.5	2461	19	4450	46	4450	1.2				32.267	GST14	-P180L4	81
40	5057	1.1	4.0	2796	16	5057	40	5057	1.1				36.667	GST14	-P180L4	81



Selection tables, 4-pole motors

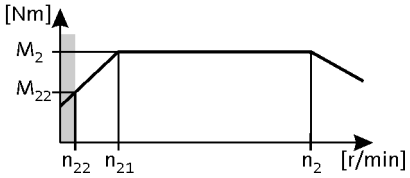

50 Hz: P_N = 22.0 kW
87 Hz: P_N = 38.1 kW

3-stage gearboxes

Mains operation 400 V, 50 Hz			Inverter operation 5 Hz -		- 20 Hz		- 50 Hz (1:10)			- 87 Hz (1:17.4)			i	Product		
n_2 [r/min]	M_2 [Nm]	c	n_{22} [r/min]	M_{22} [Nm]	n_{21} [r/min]	M_2 [Nm]	n_2 [r/min]	M_2 [Nm]	c	n_2 [r/min]	M_2 [Nm]	c		GST	m500	
37	5459	0.8	3.6	3018	15	5459	37	5459	0.8				40.185	GST14	-P180L4	84



Selection tables, 4-pole motors

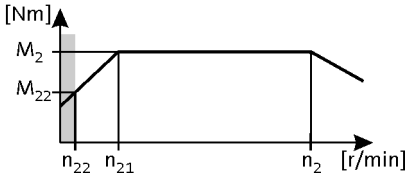

50 Hz: P_N = 30.0 kW
87 Hz: P_N = 52.0 kW

2-stage gearboxes

Mains operation 400 V, 50 Hz			Inverter operation 5 Hz -		- 20 Hz		- 50 Hz (1:10)			- 87 Hz (1:17.4)			i	Product		
n_2 [r/min]	M_2 [Nm]	c	n_{22} [r/min]	M_{22} [Nm]	n_{21} [r/min]	M_2 [Nm]	n_2 [r/min]	M_2 [Nm]	c	n_2 [r/min]	M_2 [Nm]	c		GST	m500	
184	1508	2.1	18	667	75	1508	184	1508	2.1				8.027	GST14	-P180V4	81
150	1848	1.9	15	817	61	1848	150	1848	1.9				9.841	GST14	-P180V4	81
120	2322	1.8	12	1026	49	2322	120	2322	1.8				12.362	GST14	-P180V4	81
98	2846	1.6	9.6	1258	40	2846	98	2846	1.6				15.156	GST14	-P180V4	81
74	3764	1.3	7.2	1664	30	3764	74	3764	1.3				20.044	GST14	-P180V4	81
65	4278	1.2	6.4	1891	26	4278	65	4278	1.2				22.778	GST14	-P180V4	81



Selection tables, 4-pole motors

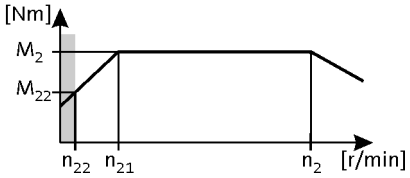

50 Hz: P_N = 37.0 kW
87 Hz: P_N = 64.6 kW

2-stage gearboxes

Mains operation 400 V, 50 Hz			Inverter operation 5 Hz -		- 20 Hz		- 50 Hz (1:10)			- 87 Hz (1:17.4)			i	Product		
n_2 [r/min]	M_2 [Nm]	c	n_{22} [r/min]	M_{22} [Nm]	n_{21} [r/min]	M_2 [Nm]	n_2 [r/min]	M_2 [Nm]	c	n_2 [r/min]	M_2 [Nm]	c		GST	m500	
185	1851	2.0	18	812	75	1851	185	1851	2.0				8.027	GST14	-P225M4	81
151	2269	1.7	15	996	61	2269	151	2269	1.7				9.841	GST14	-P225M4	81
74	4621	1.1	7.2	2028	30	4621	74	4621	1.1				20.044	GST14	-P225M4	81



Dimensions, 4-pole motors

GST06, 1-stage gearboxes

Dimensions with solid shaft and foot (VBR)

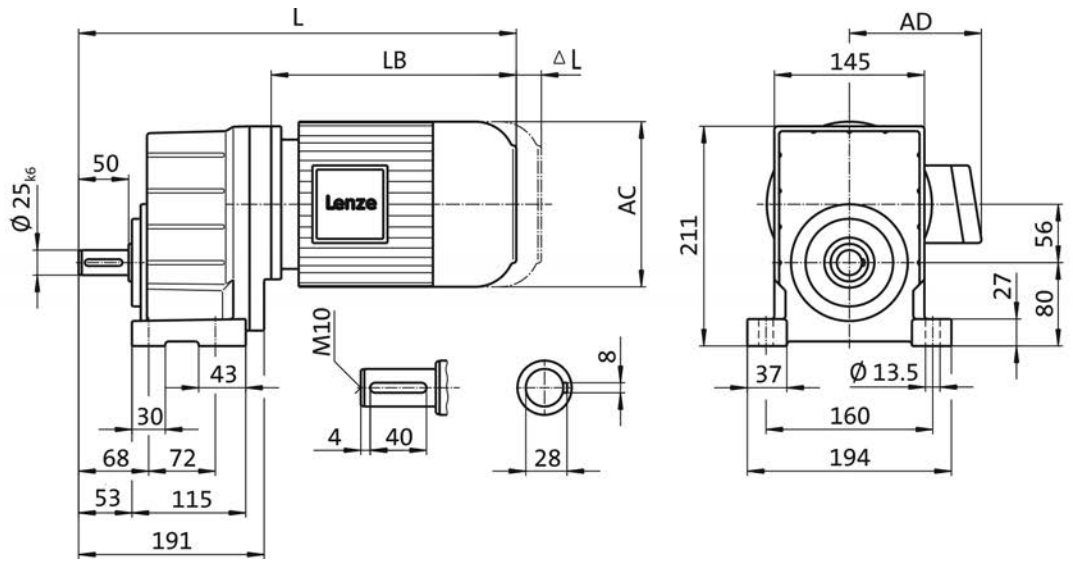

Product			m500
			-P132M4
Dimensions			
Total length	**L**	**[mm]**	707
Motor length	**LB**	**[mm]**	490
Length of motor options	**Δ L**	**[mm]**	176
Motor diameter	**AC**	**[mm]**	258
Distance motor/connection	**AD**	**[mm]**	182



Dimensions, 4-pole motors

GST06, 1-stage gearboxes

Dimensions with solid shaft and centering (VCR)

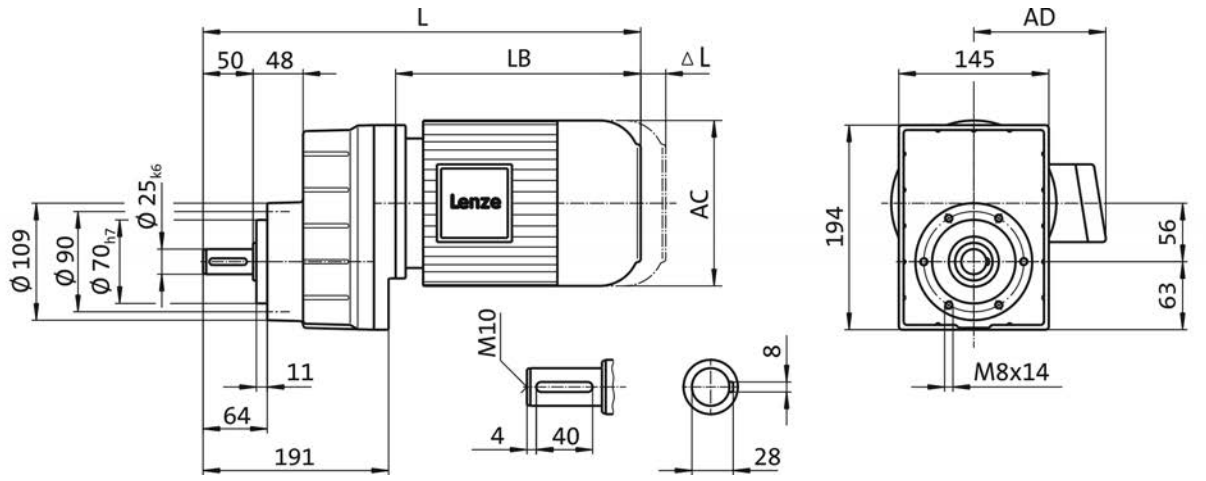

Product			m500
			-P132M4
Dimensions			
Total length	**L**	**[mm]**	707
Motor length	**LB**	**[mm]**	490
Length of motor options	**Δ L**	**[mm]**	176
Motor diameter	**AC**	**[mm]**	258
Distance motor/connection	**AD**	**[mm]**	182



Dimensions, 4-pole motors

GST06, 1-stage gearboxes

Dimensions with solid shaft and flange (VCK)

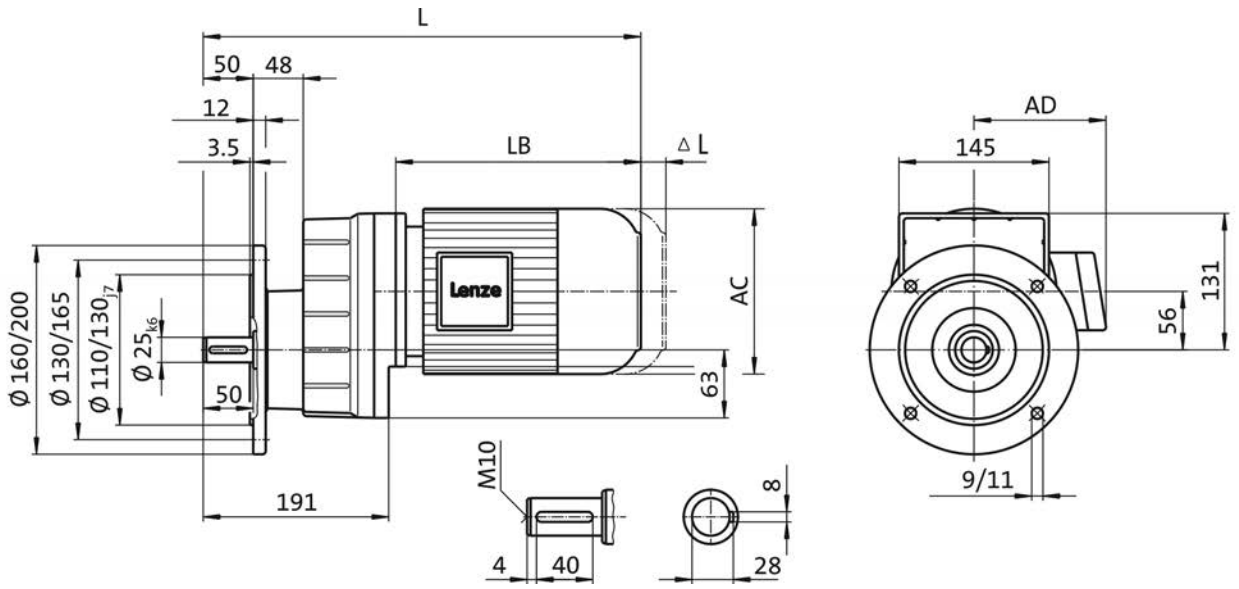

Product			m500
			-P132M4
Dimensions			
Total length	**L**	**[mm]**	707
Motor length	**LB**	**[mm]**	490
Length of motor options	**Δ L**	**[mm]**	176
Motor diameter	**AC**	**[mm]**	258
Distance motor/connection	**AD**	**[mm]**	182



Dimensions, 4-pole motors

GST06, 2-stage gearboxes

Dimensions with solid shaft and foot (VBR)

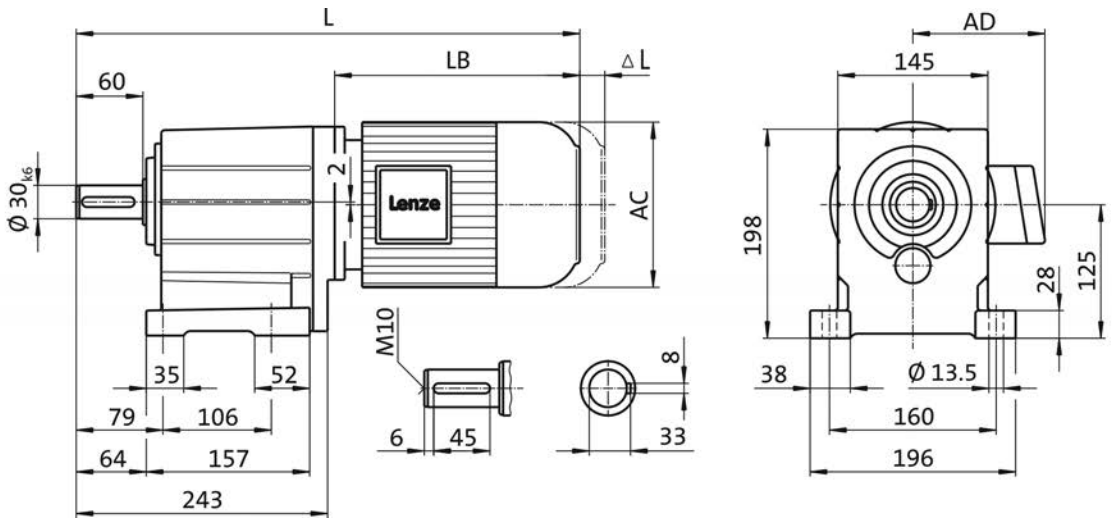

Product			m500	
			-P132L4	-P132M4
Dimensions				
Total length	**L**	**[mm]**	759	
Motor length	**LB**	**[mm]**	490	
Length of motor options	**Δ L**	**[mm]**	176	
Motor diameter	**AC**	**[mm]**	258	
Distance motor/connection	**AD**	**[mm]**	182	



Dimensions, 4-pole motors

GST06, 2-stage gearboxes

Dimensions with solid shaft and centering (VCR)

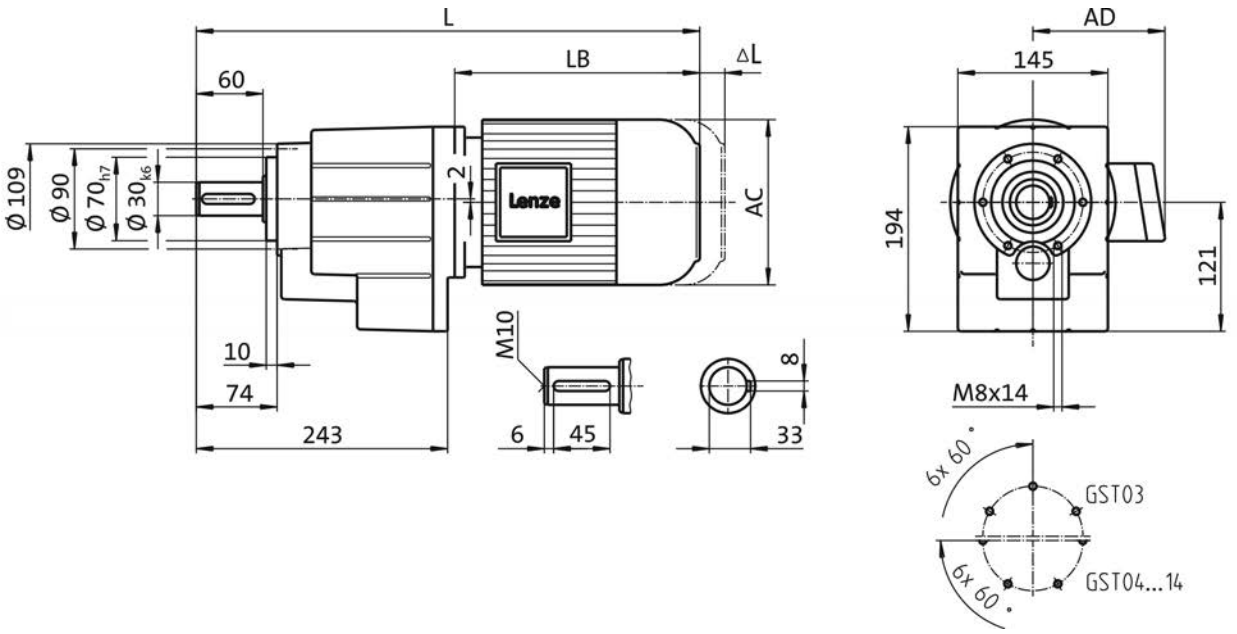

Product			m500	
			-P132L4	-P132M4
Dimensions				
Total length	**L**	**[mm]**	759	
Motor length	**LB**	**[mm]**	490	
Length of motor options	**Δ L**	**[mm]**	176	
Motor diameter	**AC**	**[mm]**	258	
Distance motor/connection	**AD**	**[mm]**	182	



Dimensions, 4-pole motors

GST06, 2-stage gearboxes

Dimensions with solid shaft and flange (VCK)

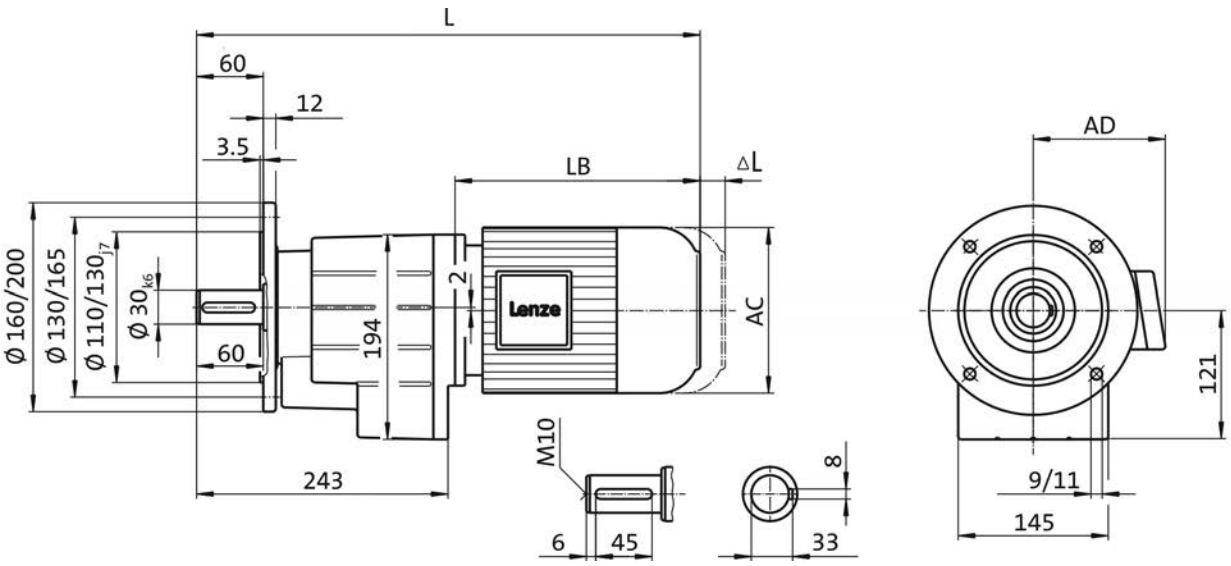

Product			m500	
			-P132L4	-P132M4
Dimensions				
Total length	**L**	**[mm]**	759	
Motor length	**LB**	**[mm]**	490	
Length of motor options	**Δ L**	**[mm]**	176	
Motor diameter	**AC**	**[mm]**	258	
Distance motor/connection	**AD**	**[mm]**	182	



Dimensions, 4-pole motors

GST07, 1-stage gearboxes

Dimensions with solid shaft and foot (VBR)

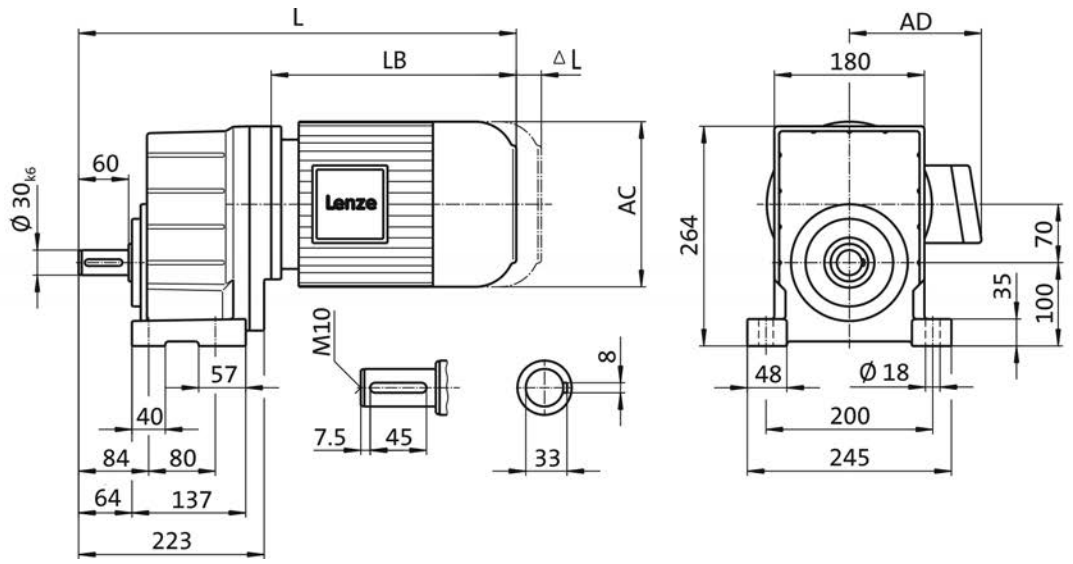

Product			m500	
			-P132L4	-P132M4
Dimensions				
Total length	**L**	**[mm]**	736	
Motor length	**LB**	**[mm]**	490	
Length of motor options	**Δ L**	**[mm]**	176	
Motor diameter	**AC**	**[mm]**	258	
Distance motor/connection	**AD**	**[mm]**	182	



Dimensions, 4-pole motors

GST07, 1-stage gearboxes

Dimensions with solid shaft and centering (VCR)

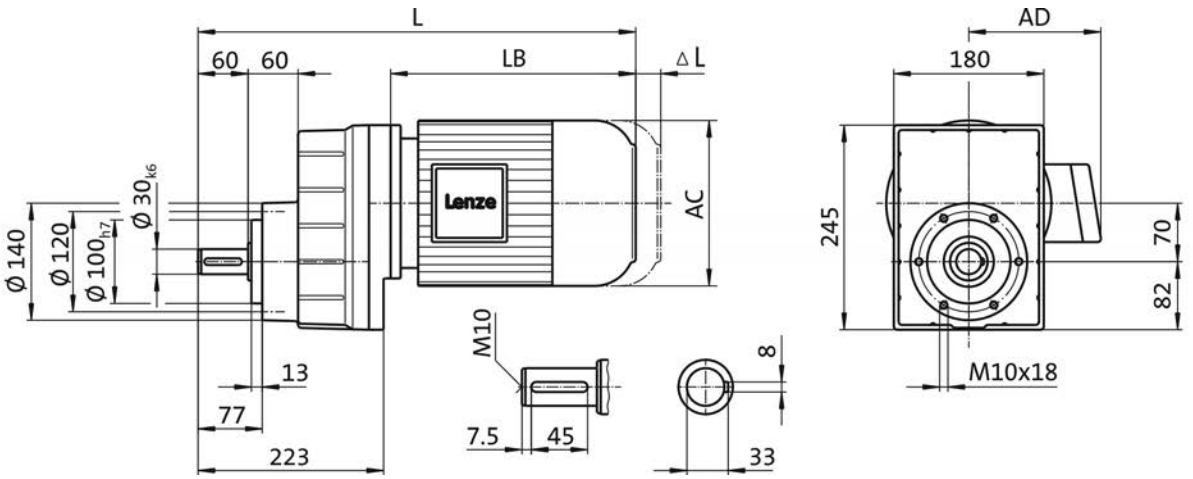

Product			m500	
			-P132L4	-P132M4
Dimensions				
Total length	**L**	**[mm]**	736	
Motor length	**LB**	**[mm]**	490	
Length of motor options	**Δ L**	**[mm]**	176	
Motor diameter	**AC**	**[mm]**	258	
Distance motor/connection	**AD**	**[mm]**	182	



Dimensions, 4-pole motors

GST07, 1-stage gearboxes

Dimensions with solid shaft and flange (VCK)

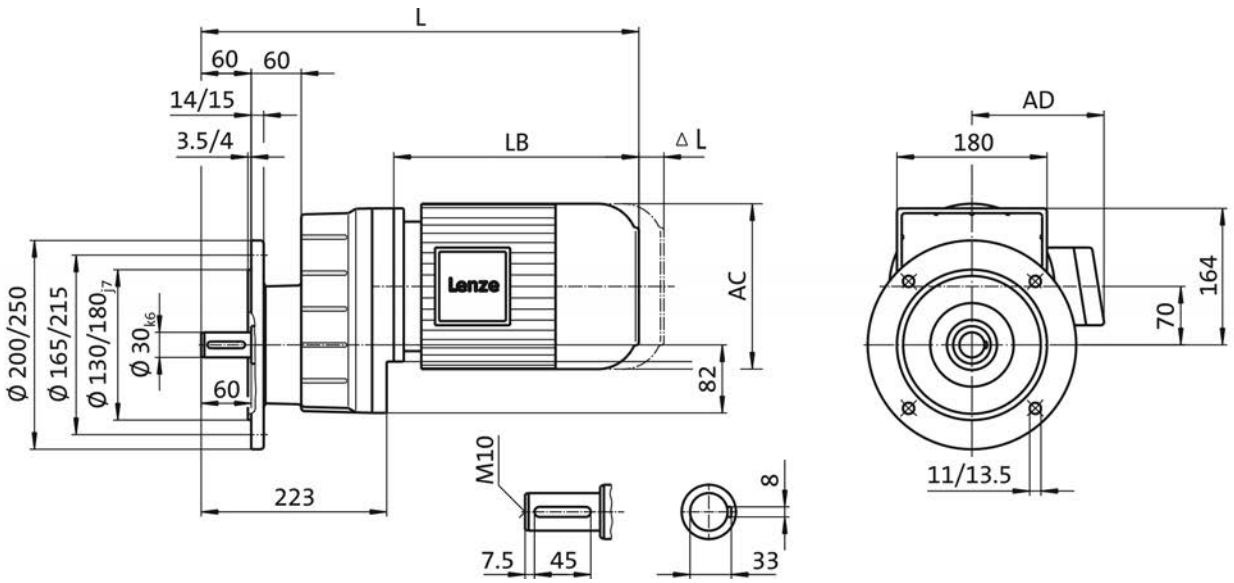

Product			m500	
			-P132L4	-P132M4
Dimensions				
Total length	**L**	**[mm]**	736	
Motor length	**LB**	**[mm]**	490	
Length of motor options	**Δ L**	**[mm]**	176	
Motor diameter	**AC**	**[mm]**	258	
Distance motor/connection	**AD**	**[mm]**	182	



Dimensions, 4-pole motors

GST07, 2-stage gearboxes

Dimensions with solid shaft and foot (VBR)

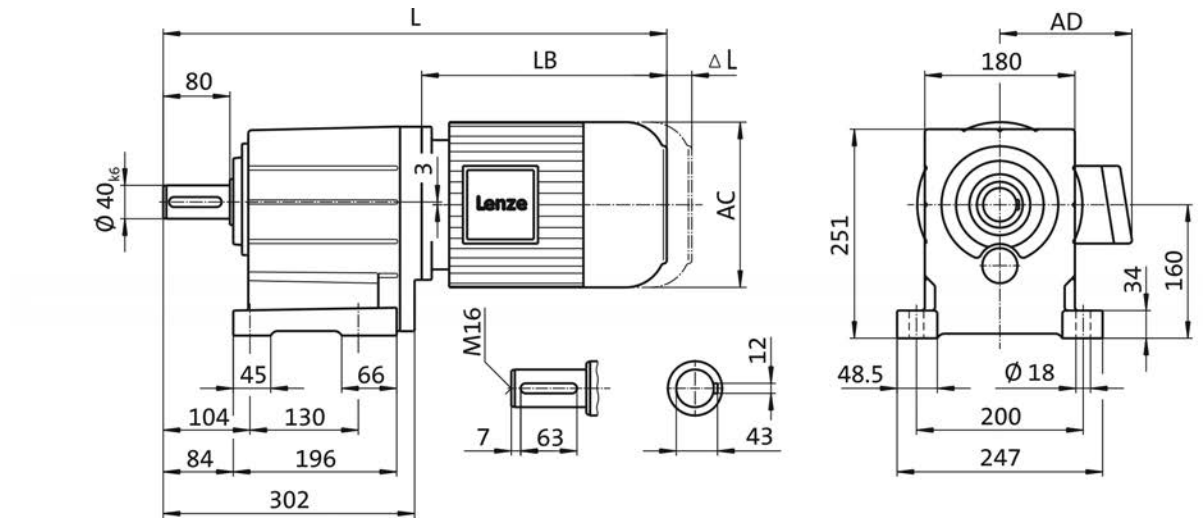

Product			m500		
			-P132L4	-P132M4	-P160M4
Dimensions					
Total length	**L**	**[mm]**	815		875
Motor length	**LB**	**[mm]**	490		545
Length of motor options	**Δ L**	**[mm]**	176		291
Motor diameter	**AC**	**[mm]**	258		310
Distance motor/connection	**AD**	**[mm]**	182		231



Dimensions, 4-pole motors

GST07, 2-stage gearboxes

Dimensions with solid shaft and centering (VCR)

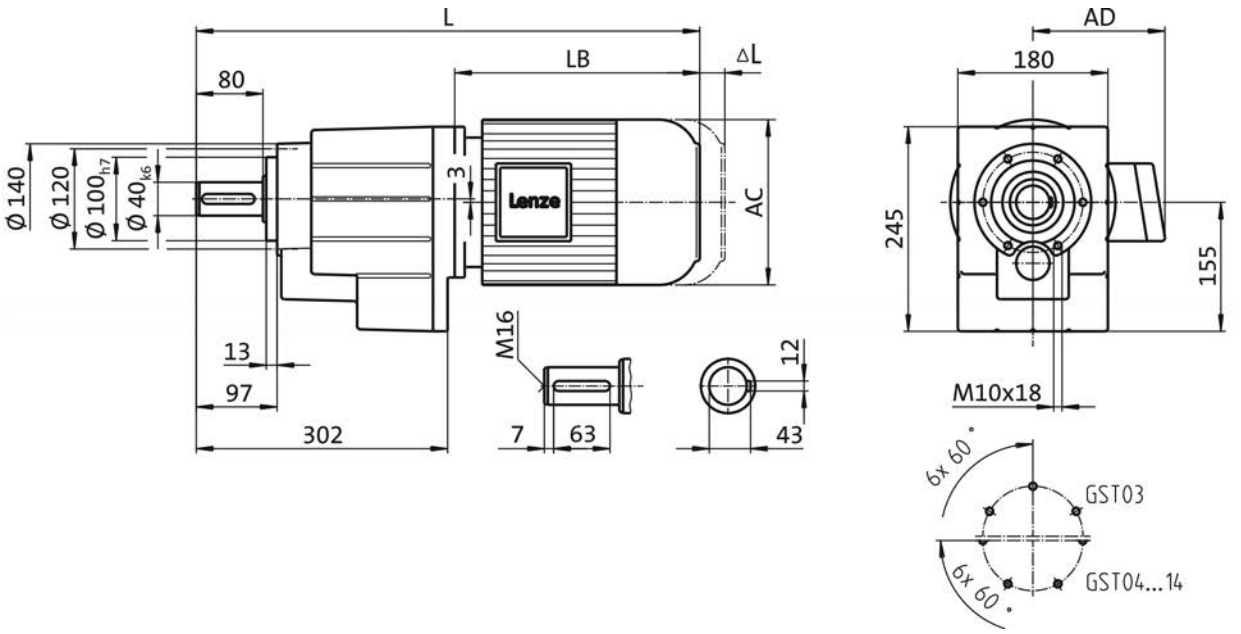

Product			m500		
			-P132L4	-P132M4	-P160M4
Dimensions					
Total length	**L**	**[mm]**	815		875
Motor length	**LB**	**[mm]**	490		545
Length of motor options	**Δ L**	**[mm]**	176		291
Motor diameter	**AC**	**[mm]**	258		310
Distance motor/connection	**AD**	**[mm]**	182		231



Dimensions, 4-pole motors

GST07, 2-stage gearboxes

Dimensions with solid shaft and flange (VCK)

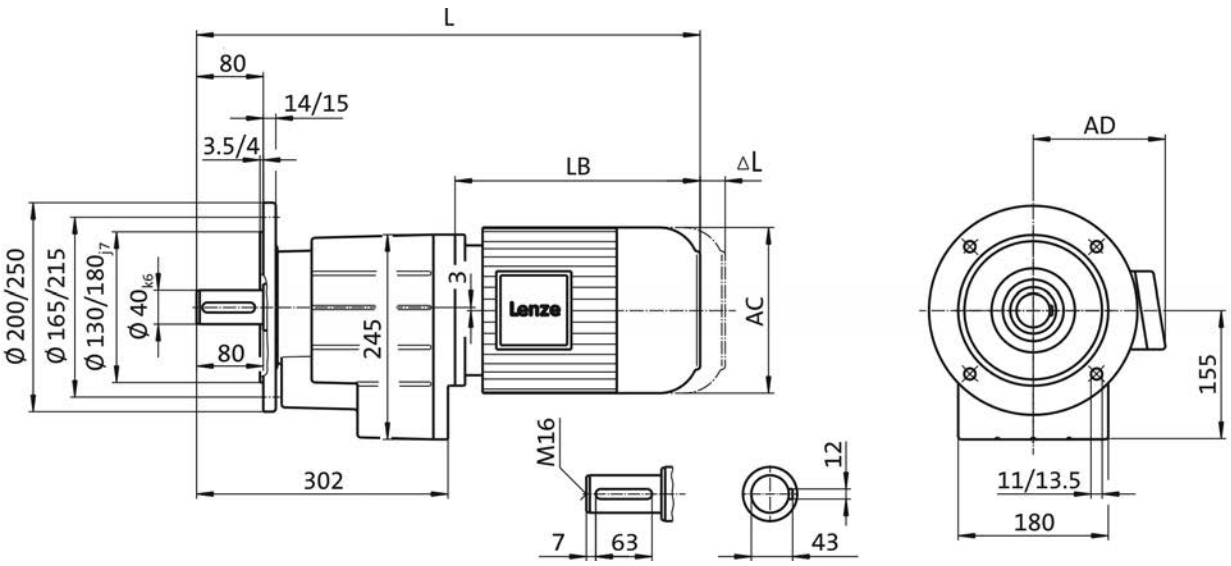

Product			m500		
			-P132L4	-P132M4	-P160M4
Dimensions					
Total length	**L**	**[mm]**	815		875
Motor length	**LB**	**[mm]**	490		545
Length of motor options	**Δ L**	**[mm]**	176		291
Motor diameter	**AC**	**[mm]**	258		310
Distance motor/connection	**AD**	**[mm]**	182		231



Dimensions, 4-pole motors

GST09, 1-stage gearboxes

Dimensions with solid shaft and foot (VBR)

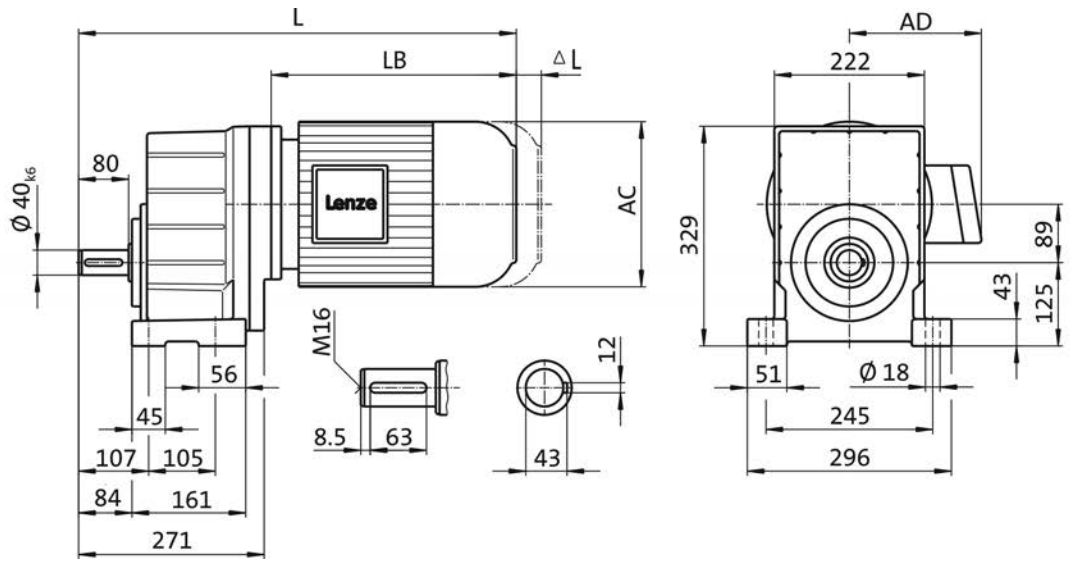

Product			m500					
			-P132L4	-P132M4	-P160L4	-P160M4	-P180L4	-P180M4
Dimensions								
Total length	**L**	**[mm]**	779		839		894	
Motor length	**LB**	**[mm]**	490		545		600	
Length of motor options	**Δ L**	**[mm]**	176		291		248	
Motor diameter	**AC**	**[mm]**	258		310		281	
Distance motor/connection	**AD**	**[mm]**	182		231		282	



Dimensions, 4-pole motors

GST09, 1-stage gearboxes

Dimensions with solid shaft and centering (VCR)

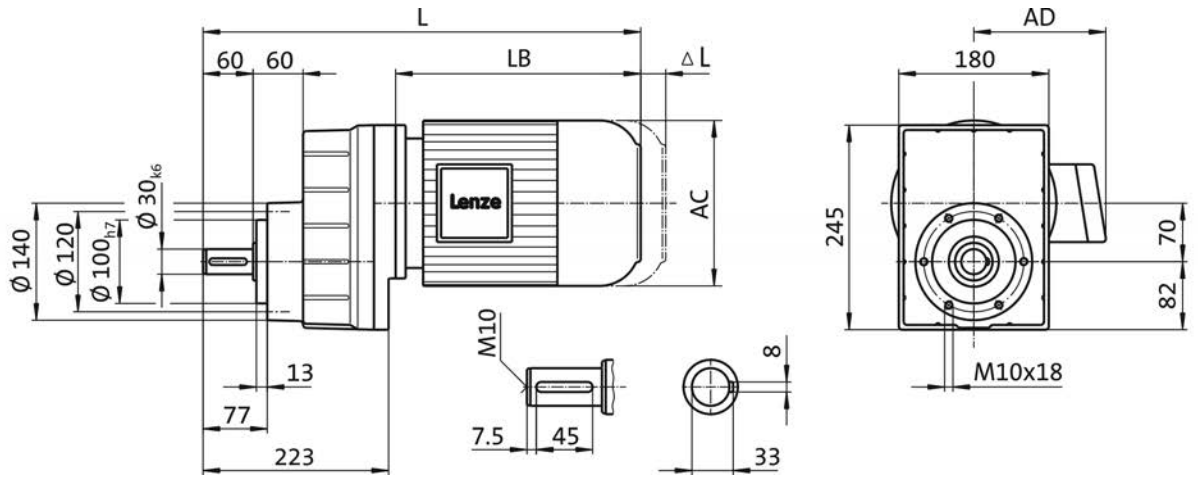

Product			m500					
			-P132L4	-P132M4	-P160L4	-P160M4	-P180L4	-P180M4
Dimensions								
Total length	**L**	**[mm]**	779		839		894	
Motor length	**LB**	**[mm]**	490		545		600	
Length of motor options	**Δ L**	**[mm]**	176		291		248	
Motor diameter	**AC**	**[mm]**	258		310		281	
Distance motor/connection	**AD**	**[mm]**	182		231		282	



Dimensions, 4-pole motors

GST09, 1-stage gearboxes

Dimensions with solid shaft and flange (VCK)

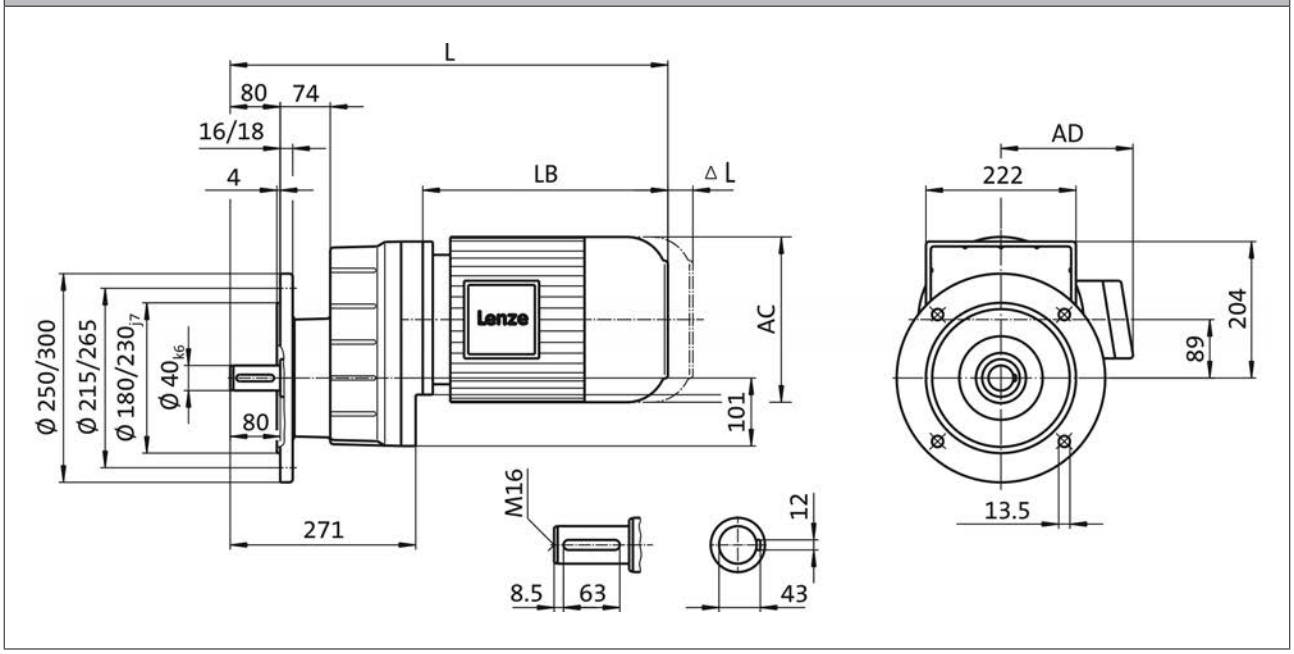

Product			m500					
			-P132L4	-P132M4	-P160L4	-P160M4	-P180L4	-P180M4
Dimensions								
Total length	**L**	**[mm]**	779		839		894	
Motor length	**LB**	**[mm]**	490		545		600	
Length of motor options	**Δ L**	**[mm]**	176		291		248	
Motor diameter	**AC**	**[mm]**	258		310		281	
Distance motor/connection	**AD**	**[mm]**	182		231		282	



Dimensions, 4-pole motors

GST09, 2-stage gearboxes

Dimensions with solid shaft and foot (VBR)

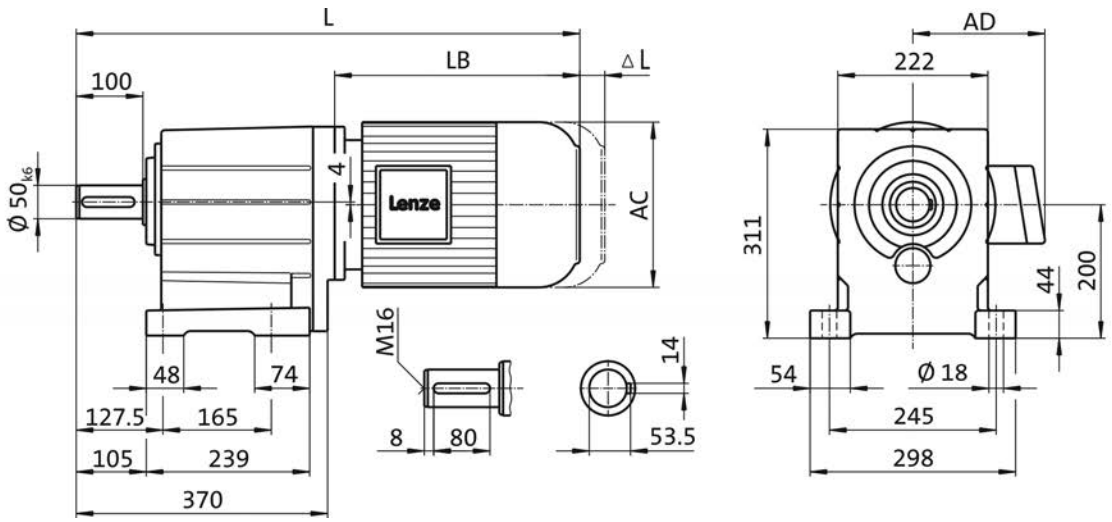

Product			m500					
			-P132L4	-P132M4	-P160L4	-P160M4	-P180L4	-P180M4
Dimensions								
Total length	**L**	**[mm]**	878		938		993	
Motor length	**LB**	**[mm]**	490		545		600	
Length of motor options	**Δ L**	**[mm]**	176		291		248	
Motor diameter	**AC**	**[mm]**	258		310		281	
Distance motor/connection	**AD**	**[mm]**	182		231		282	



Dimensions, 4-pole motors

GST09, 2-stage gearboxes

Dimensions with solid shaft and centering (VCR)

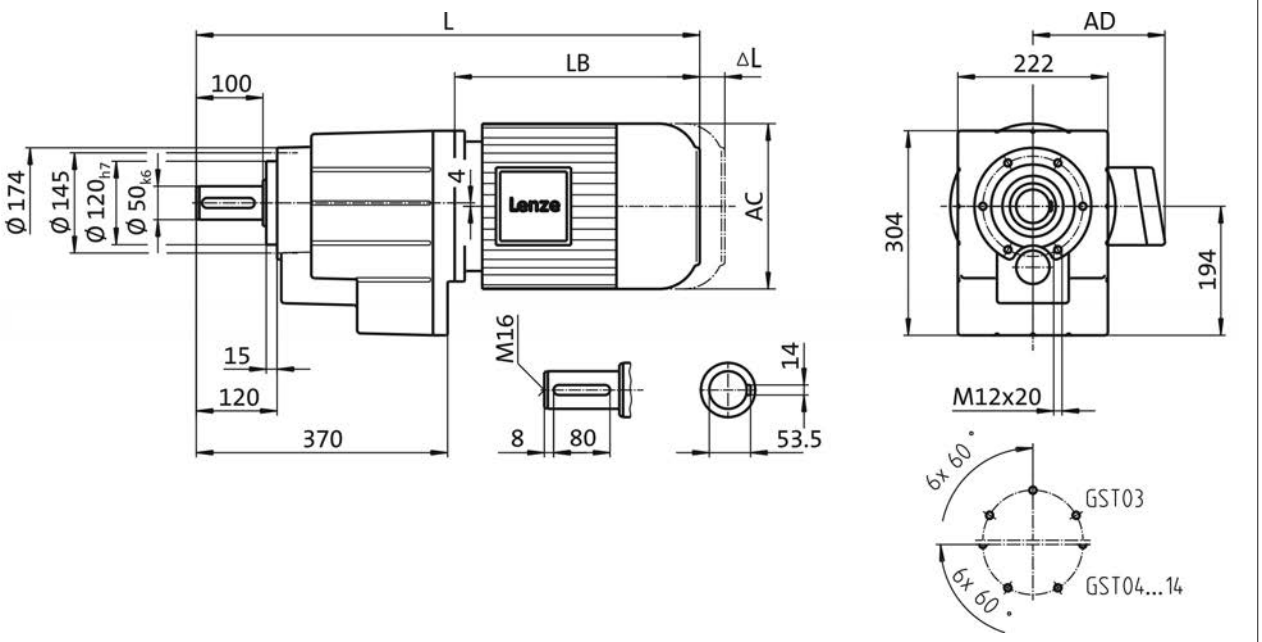

Product			m500					
			-P132L4	-P132M4	-P160L4	-P160M4	-P180L4	-P180M4
Dimensions								
Total length	**L**	**[mm]**	878		938		993	
Motor length	**LB**	**[mm]**	490		545		600	
Length of motor options	**Δ L**	**[mm]**	176		291		248	
Motor diameter	**AC**	**[mm]**	258		310		281	
Distance motor/connection	**AD**	**[mm]**	182		231		282	



Dimensions, 4-pole motors

GST09, 2-stage gearboxes

Dimensions with solid shaft and flange (VCK)

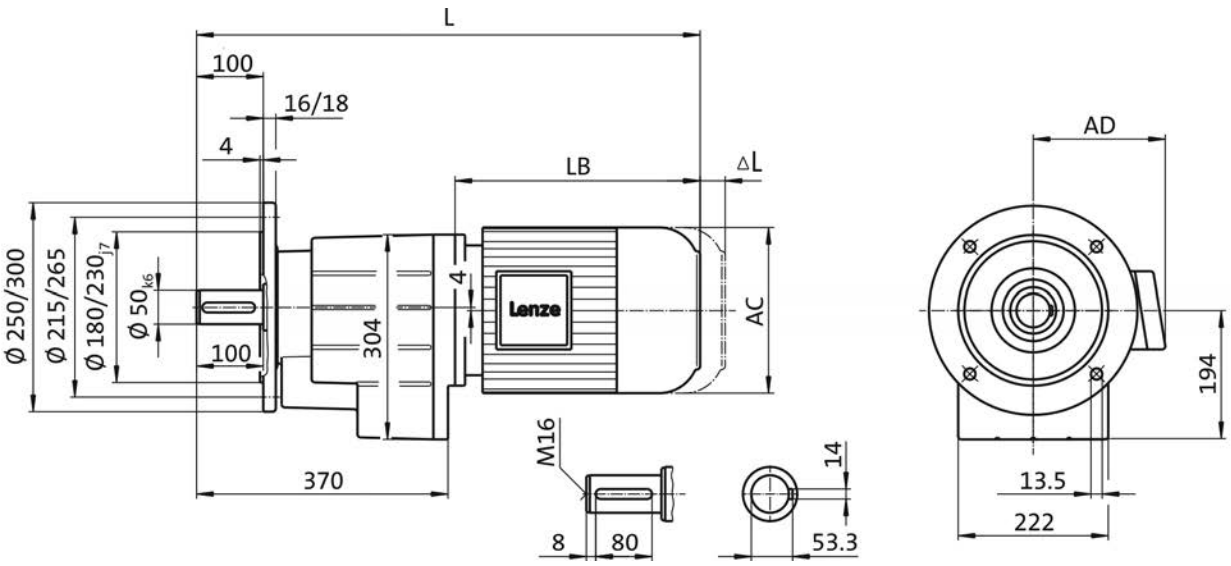

Product			m500					
			-P132L4	-P132M4	-P160L4	-P160M4	-P180L4	-P180M4
Dimensions								
Total length	**L**	**[mm]**	878		938		993	
Motor length	**LB**	**[mm]**	490		545		600	
Length of motor options	**Δ L**	**[mm]**	176		291		248	
Motor diameter	**AC**	**[mm]**	258		310		281	
Distance motor/connection	**AD**	**[mm]**	182		231		282	



Dimensions, 4-pole motors

GST09, 3-stage gearboxes

Dimensions with solid shaft and foot (VBR)

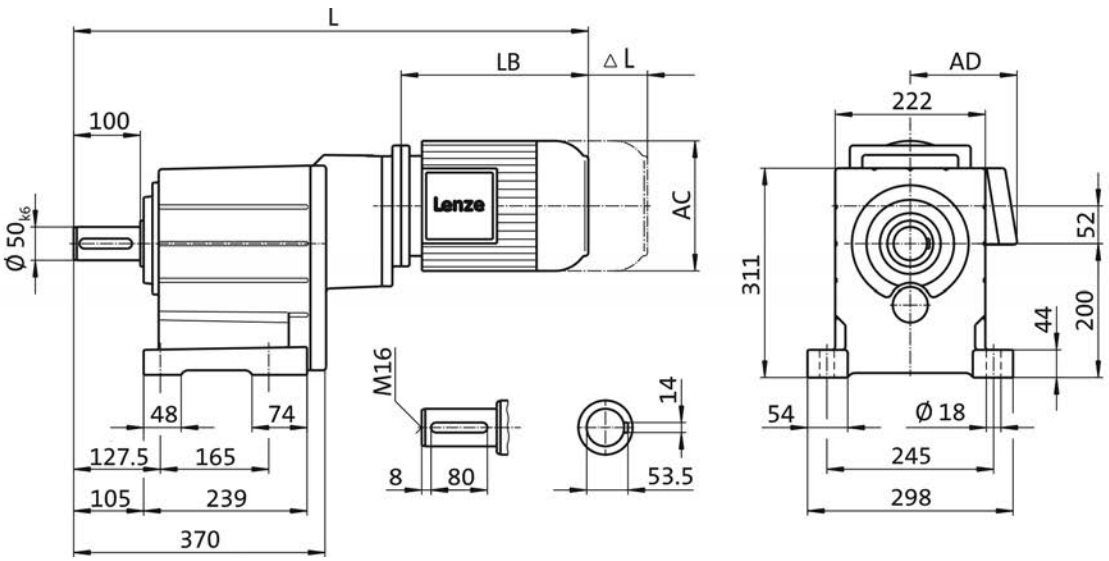

Product			m500	
			-P132L4	-P132M4
Dimensions				
Total length	**L**	**[mm]**	1000	
Motor length	**LB**	**[mm]**	490	
Length of motor options	**Δ L**	**[mm]**	176	
Motor diameter	**AC**	**[mm]**	258	
Distance motor/connection	**AD**	**[mm]**	182	



Dimensions, 4-pole motors

GST09, 3-stage gearboxes

Dimensions with solid shaft and centering (VCR)

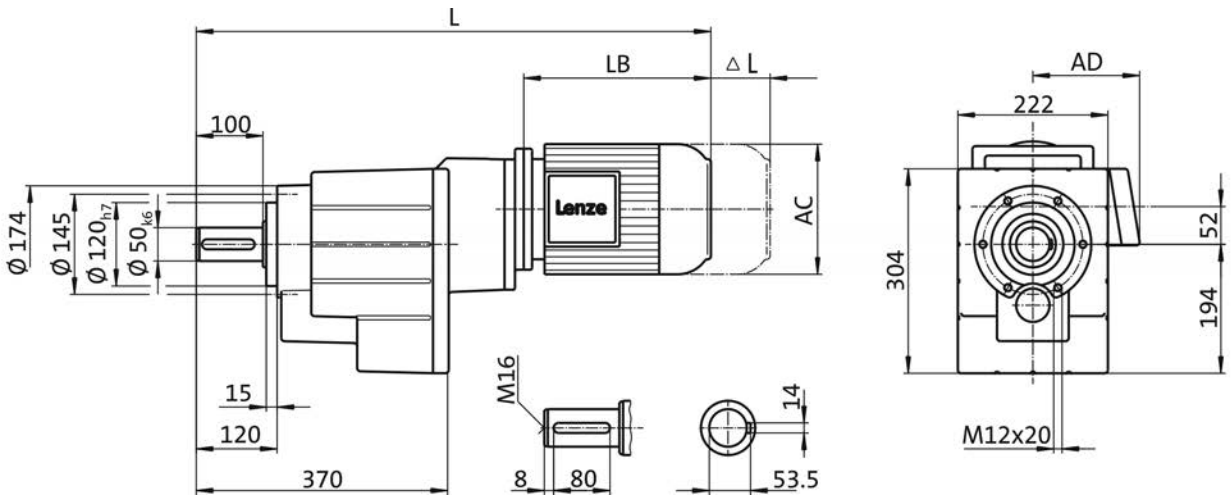

Product			m500	
			-P132L4	-P132M4
Dimensions				
Total length	**L**	**[mm]**	1000	
Motor length	**LB**	**[mm]**	490	
Length of motor options	**Δ L**	**[mm]**	176	
Motor diameter	**AC**	**[mm]**	258	
Distance motor/connection	**AD**	**[mm]**	182	



Dimensions, 4-pole motors

GST09, 3-stage gearboxes

Dimensions with solid shaft and flange (VCK)

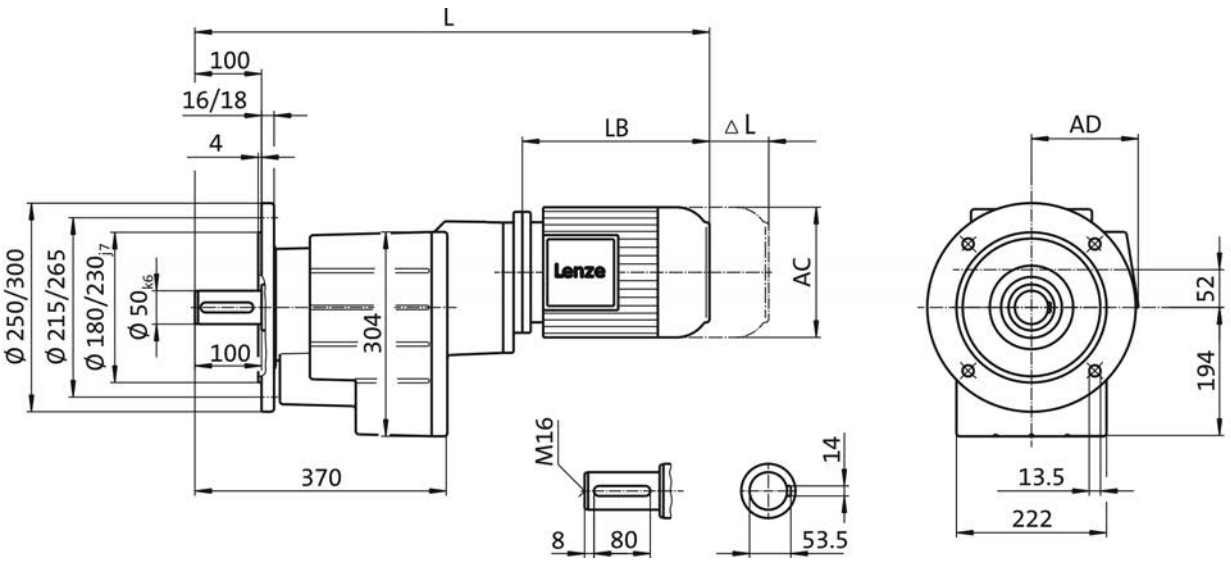

Product			m500	
			-P132L4	-P132M4
Dimensions				
Total length	**L**	**[mm]**	1000	
Motor length	**LB**	**[mm]**	490	
Length of motor options	**Δ L**	**[mm]**	176	
Motor diameter	**AC**	**[mm]**	258	
Distance motor/connection	**AD**	**[mm]**	182	



Dimensions, 4-pole motors

GST11, 2-stage gearboxes

Dimensions with solid shaft and foot (VBR)

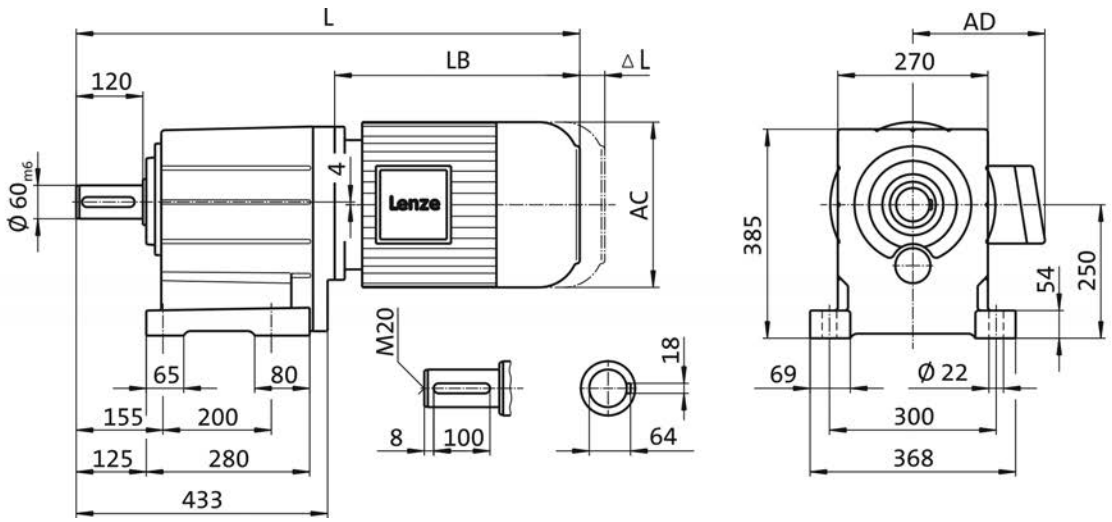

Product			m500					
			-P132L4	-P132M4	-P160L4	-P160M4	-P180L4	-P180M4
Dimensions								
Total length	**L**	**[mm]**	935		995		1050	
Motor length	**LB**	**[mm]**	490		545		600	
Length of motor options	**Δ L**	**[mm]**	176		291		248	
Motor diameter	**AC**	**[mm]**	258		310		281	
Distance motor/connection	**AD**	**[mm]**	182		231		282	



Dimensions, 4-pole motors

GST11, 2-stage gearboxes

Dimensions with solid shaft and centering (VCR)

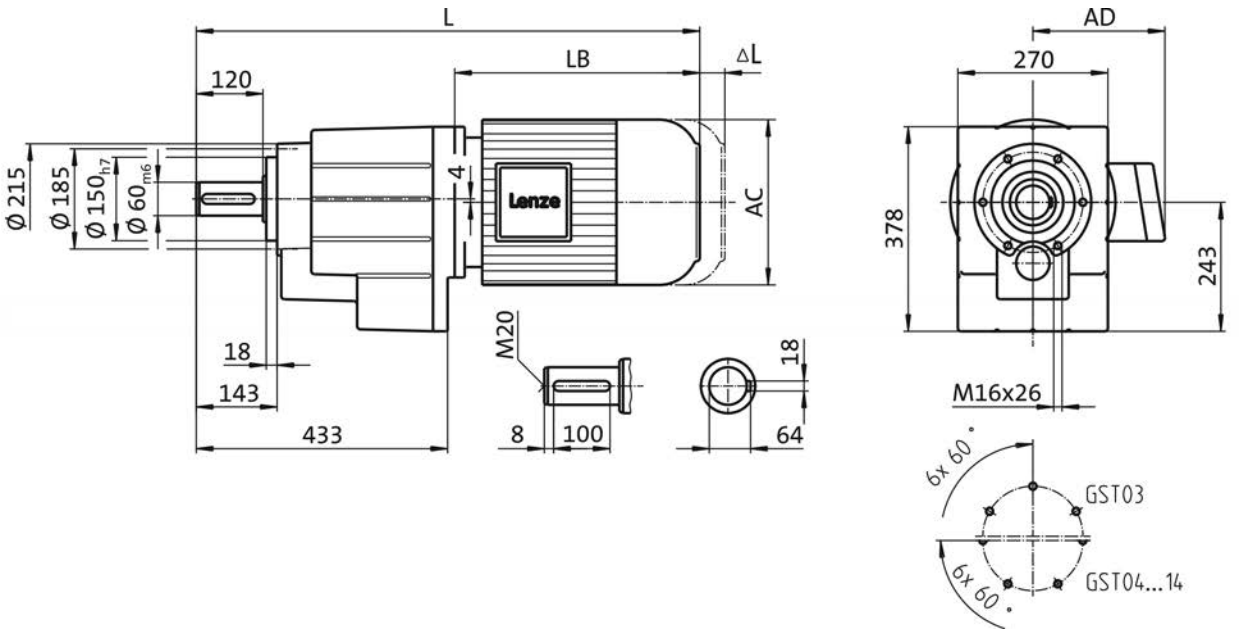

Product			m500					
			-P132L4	-P132M4	-P160L4	-P160M4	-P180L4	-P180M4
Dimensions								
Total length	**L**	**[mm]**	935		995		1050	
Motor length	**LB**	**[mm]**	490		545		600	
Length of motor options	**Δ L**	**[mm]**	176		291		248	
Motor diameter	**AC**	**[mm]**	258		310		281	
Distance motor/connection	**AD**	**[mm]**	182		231		282	



Dimensions, 4-pole motors

GST11, 2-stage gearboxes

Dimensions with solid shaft and flange (VCK)

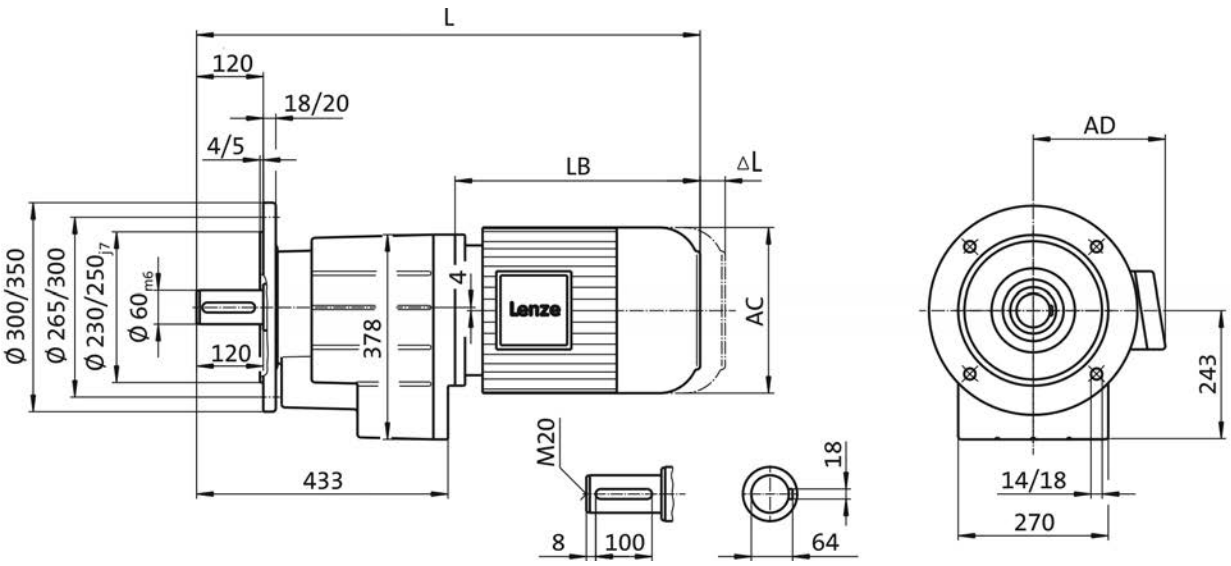

Product			m500					
			-P132L4	-P132M4	-P160L4	-P160M4	-P180L4	-P180M4
Dimensions								
Total length	**L**	**[mm]**	935		995		1050	
Motor length	**LB**	**[mm]**	490		545		600	
Length of motor options	**Δ L**	**[mm]**	176		291		248	
Motor diameter	**AC**	**[mm]**	258		310		281	
Distance motor/connection	**AD**	**[mm]**	182		231		282	



Dimensions, 4-pole motors

GST11, 3-stage gearboxes

Dimensions with solid shaft and foot (VBR)

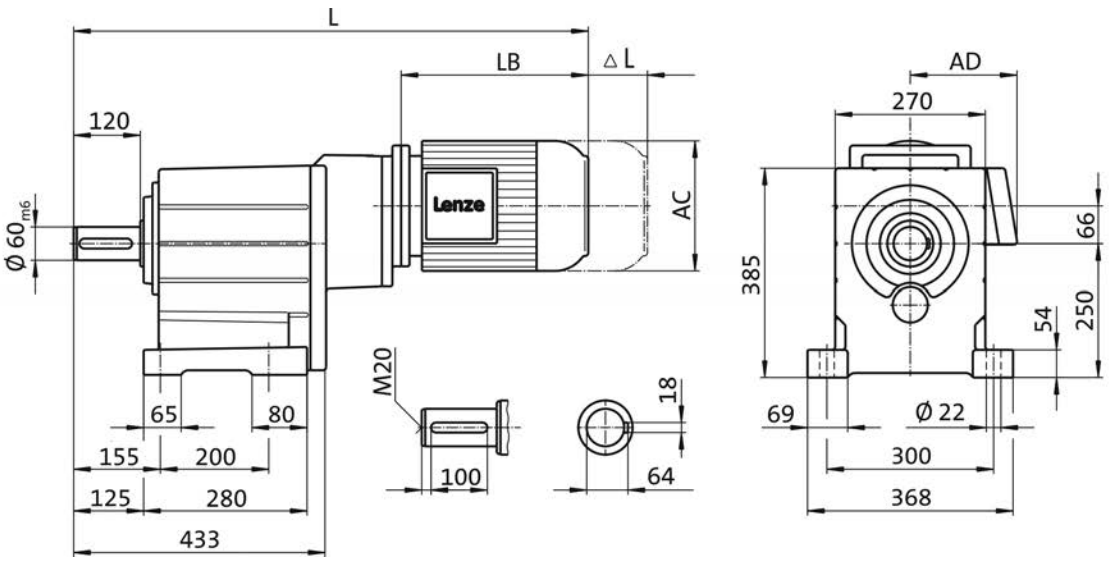

Product			m500	
			-P132L4	-P132M4
Dimensions				
Total length	**L**	**[mm]**	1076	
Motor length	**LB**	**[mm]**	490	
Length of motor options	**Δ L**	**[mm]**	176	
Motor diameter	**AC**	**[mm]**	258	
Distance motor/connection	**AD**	**[mm]**	182	



Dimensions, 4-pole motors

GST11, 3-stage gearboxes

Dimensions with solid shaft and centering (VCR)

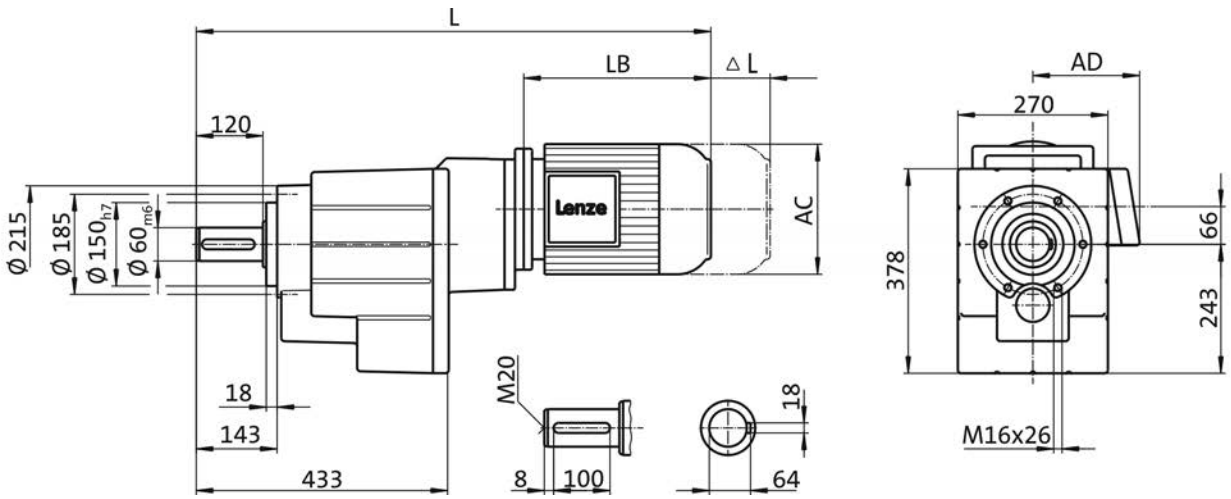

Product			m500	
			-P132L4	-P132M4
Dimensions				
Total length	**L**	**[mm]**	1076	
Motor length	**LB**	**[mm]**	490	
Length of motor options	**Δ L**	**[mm]**	176	
Motor diameter	**AC**	**[mm]**	258	
Distance motor/connection	**AD**	**[mm]**	182	



Dimensions, 4-pole motors

GST11, 3-stage gearboxes

Dimensions with solid shaft and flange (VCK)

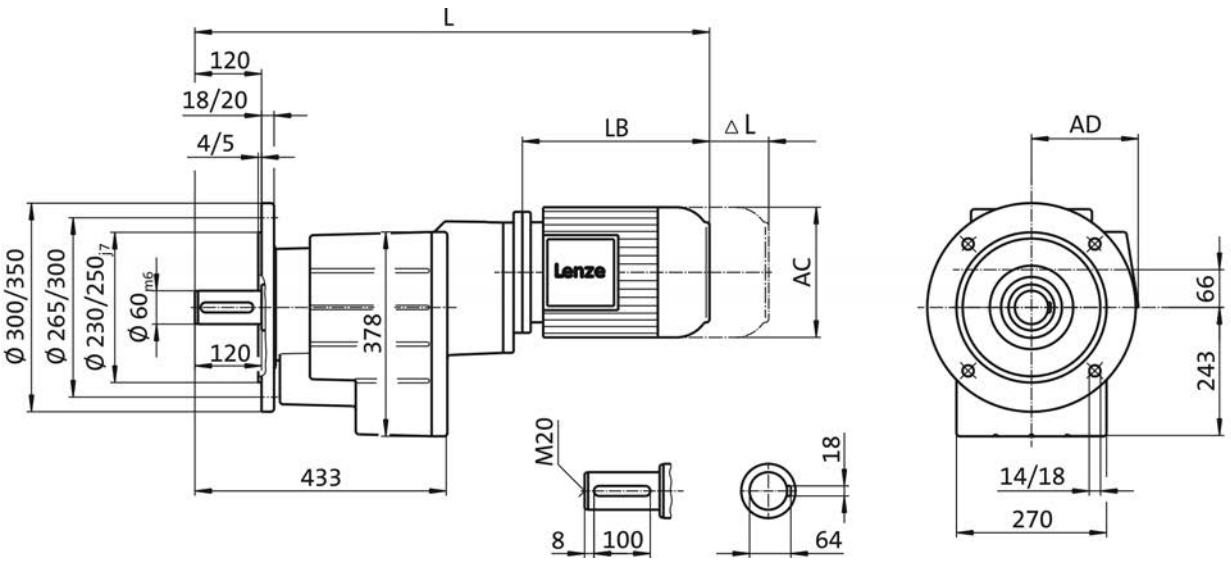

Product			m500	
			-P132L4	-P132M4
Dimensions				
Total length	**L**	**[mm]**	1076	
Motor length	**LB**	**[mm]**	490	
Length of motor options	**Δ L**	**[mm]**	176	
Motor diameter	**AC**	**[mm]**	258	
Distance motor/connection	**AD**	**[mm]**	182	



Dimensions, 4-pole motors

GST14, 2-stage gearboxes

Dimensions with solid shaft and foot (VBR)

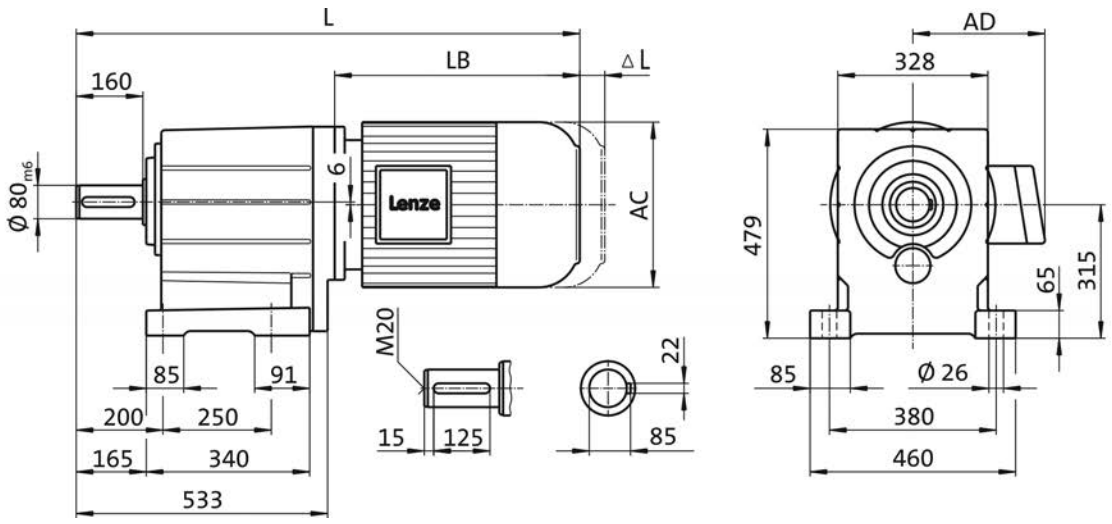

Product			m500							
			-P132L4	-P132M4	-P160L4	-P160M4	-P180L4	-P180M4	-P180V4	-P225M4
Dimensions										
Total length	**L**	**[mm]**	1025		1085		1140		1188	1310
Motor length	**LB**	**[mm]**	490		545		600		648	770
Length of motor options	**Δ L**	**[mm]**	176		291		248			212
Motor diameter	**AC**	**[mm]**	258		310		281			456
Distance motor/connection	**AD**	**[mm]**	182		231		282			330



Dimensions, 4-pole motors

GST14, 2-stage gearboxes

Dimensions with solid shaft and centering (VCR)

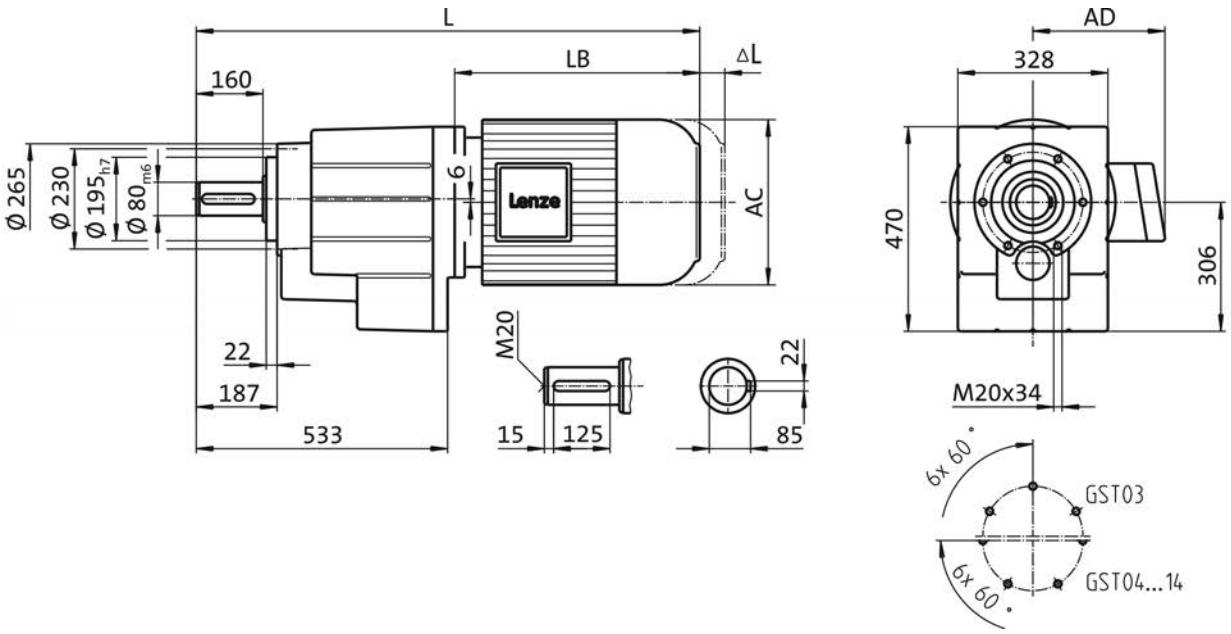

Product			m500							
			-P132L4	-P132M4	-P160L4	-P160M4	-P180L4	-P180M4	-P180V4	-P225M4
Dimensions										
Total length	**L**	**[mm]**	1025		1085		1140		1188	1310
Motor length	**LB**	**[mm]**	490		545		600		648	770
Length of motor options	**Δ L**	**[mm]**	176		291		248			212
Motor diameter	**AC**	**[mm]**	258		310		281			456
Distance motor/connection	**AD**	**[mm]**	182		231		282			330

6.1



Dimensions, 4-pole motors

GST14, 2-stage gearboxes

Dimensions with solid shaft and flange (VCK)

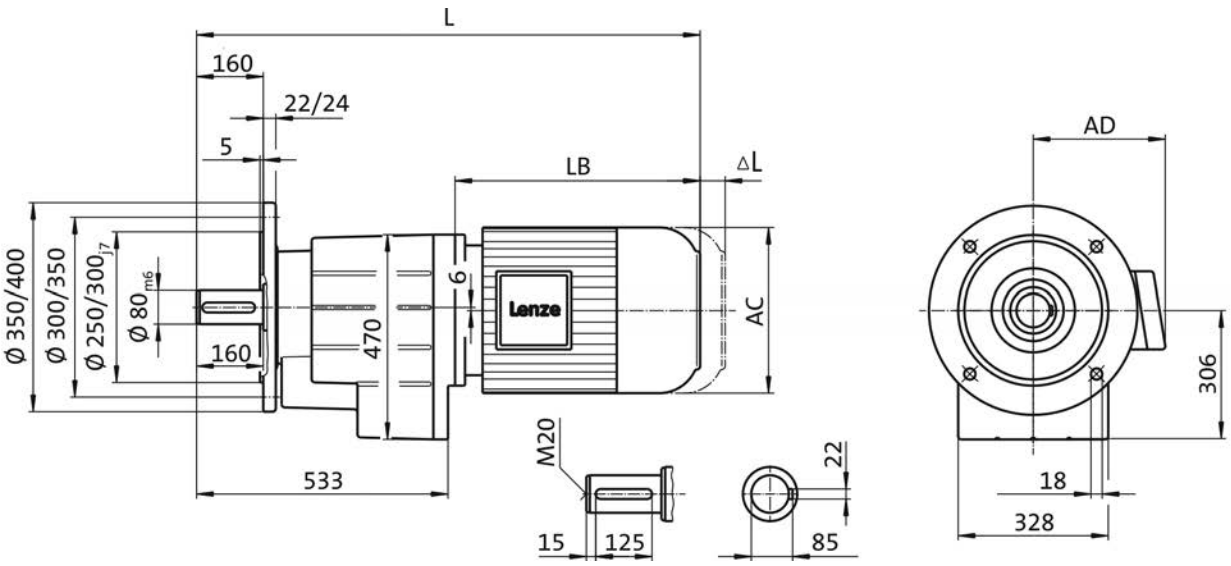

Product			m500							
			-P132L4	-P132M4	-P160L4	-P160M4	-P180L4	-P180M4	-P180V4	-P225M4
Dimensions										
Total length	**L**	**[mm]**	1025		1085		1140		1188	1310
Motor length	**LB**	**[mm]**	490		545		600		648	770
Length of motor options	**Δ L**	**[mm]**	176		291		248			212
Motor diameter	**AC**	**[mm]**	258		310		281			456
Distance motor/connection	**AD**	**[mm]**	182		231		282			330



Dimensions, 4-pole motors

GST14, 3-stage gearboxes

Dimensions with solid shaft and foot (VBR)

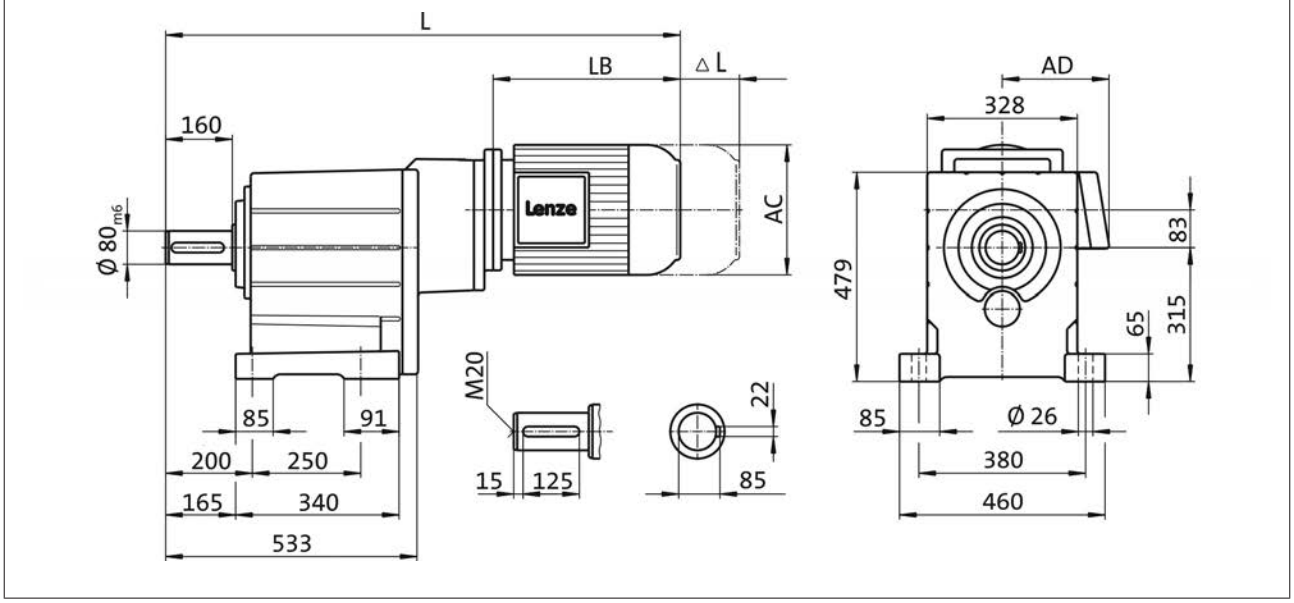

Product			m500					
			-P132L4	-P132M4	-P160L4	-P160M4	-P180L4	-P180M4
Dimensions								
Total length	**L**	**[mm]**	1200		1260		1315	
Motor length	**LB**	**[mm]**	490		545		600	
Length of motor options	**Δ L**	**[mm]**	176		291		248	
Motor diameter	**AC**	**[mm]**	258		310		281	
Distance motor/connection	**AD**	**[mm]**	182		231		282	



Dimensions, 4-pole motors

GST14, 3-stage gearboxes

Dimensions with solid shaft and centering (VCR)

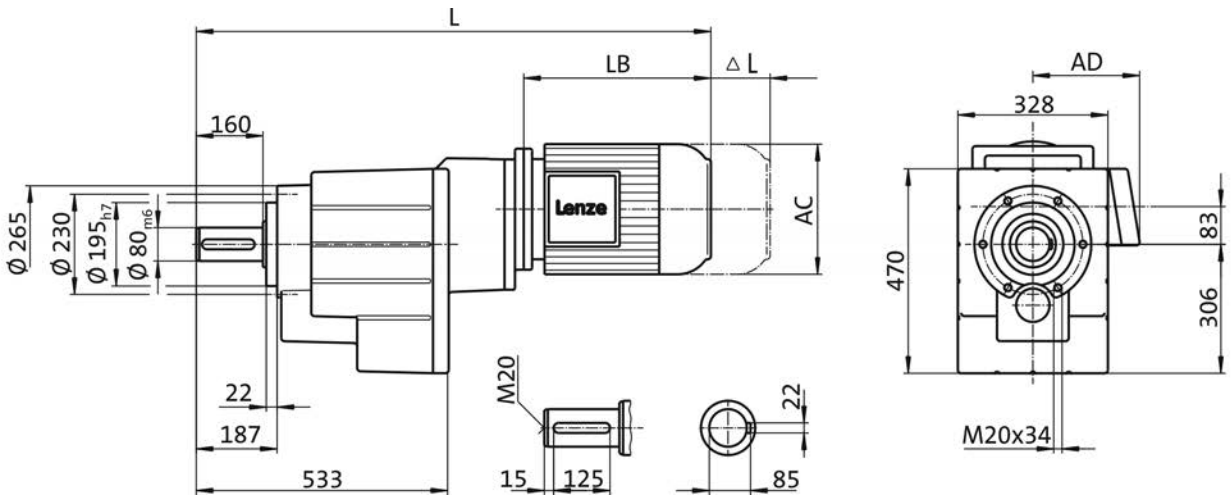

Product			m500					
			-P132L4	-P132M4	-P160L4	-P160M4	-P180L4	-P180M4
Dimensions								
Total length	**L**	**[mm]**	1200		1260		1315	
Motor length	**LB**	**[mm]**	490		545		600	
Length of motor options	**Δ L**	**[mm]**	176		291		248	
Motor diameter	**AC**	**[mm]**	258		310		281	
Distance motor/connection	**AD**	**[mm]**	182		231		282	

Dimensions, 4-pole motors

GST14, 3-stage gearboxes

Dimensions with solid shaft and flange (VCK)

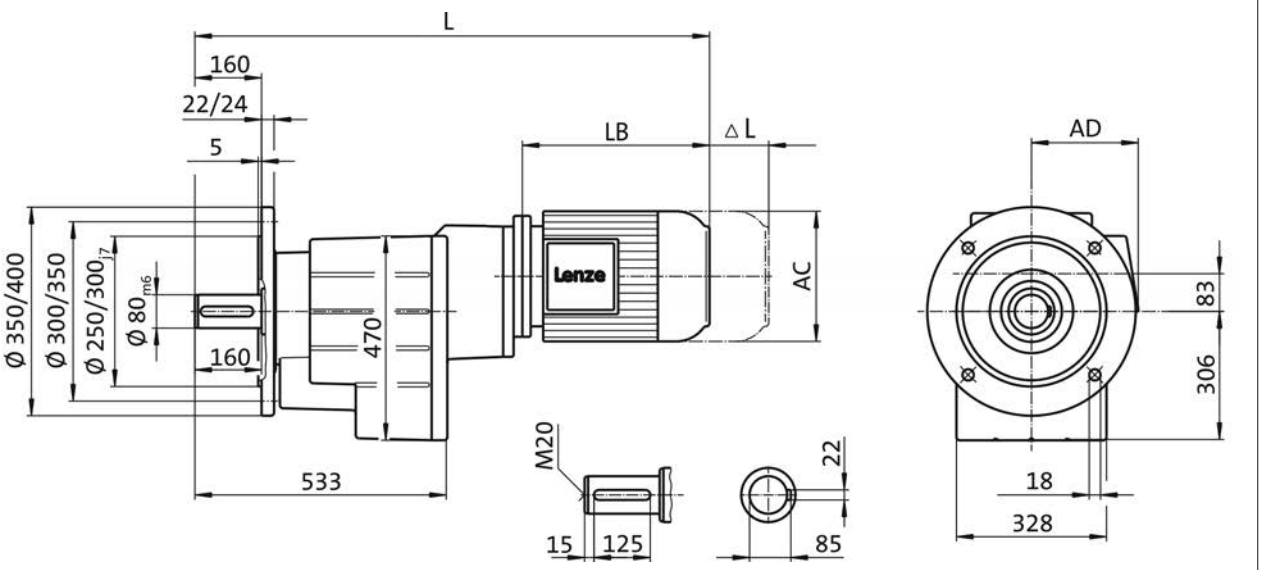

Product			m500					
			-P132L4	-P132M4	-P160L4	-P160M4	-P180L4	-P180M4
Dimensions								
Total length	**L**	**[mm]**	1200		1260		1315	
Motor length	**LB**	**[mm]**	490		545		600	
Length of motor options	**Δ L**	**[mm]**	176		291		248	
Motor diameter	**AC**	**[mm]**	258		310		281	
Distance motor/connection	**AD**	**[mm]**	182		231		282	



GST□□-2/3M VAR

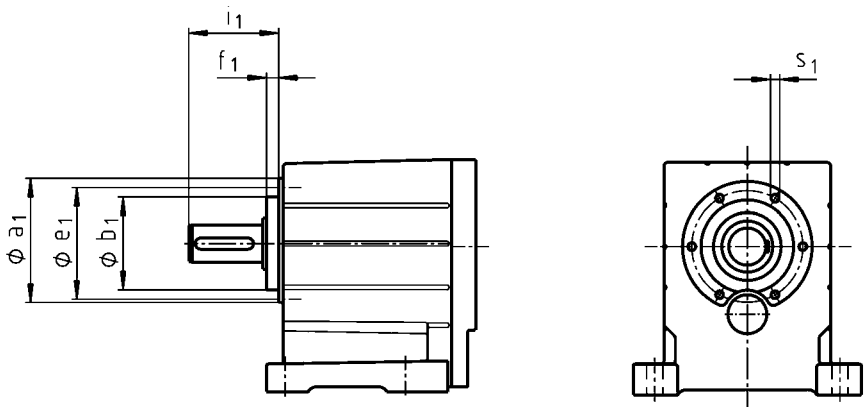

	a_1	b_1	e_1	f_1	i_1	s_1
		h7				
GST04	72	48	61	8.0	51.0	M5x10
GST05	88	58	74	9.0	62.0	M6x12
GST06	109	70	90	10.0	74.0	M8x14
GST07	140	100	120	13.0	97.0	M10x18
GST09	174	120	145	15.0	120.0	M12x20
GST11	215	150	185	18.0	143.0	M16x26
GST14	265	195	230	22.0	187.0	M20x34



GST□□-2/3M VAL

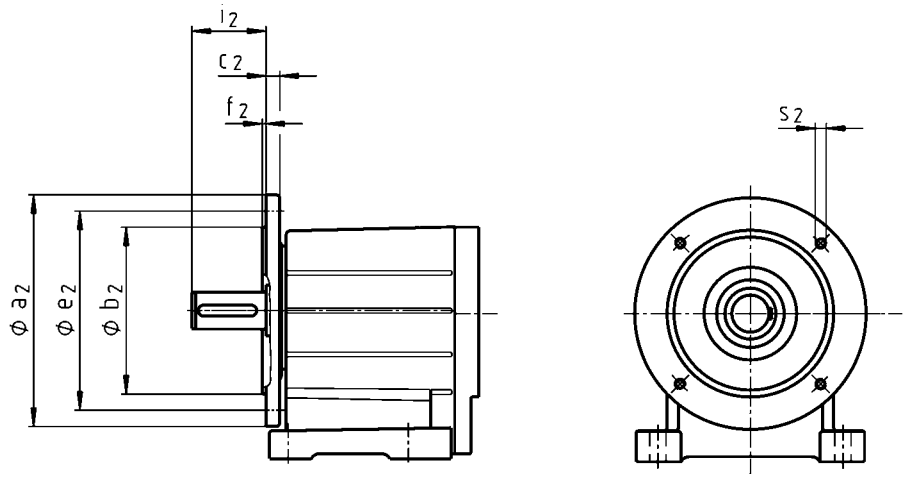

	a_2	b_2	c_2	e_2	f_2	i_2	s_2
		j7					
GST04	120 140	80 95	10 10	100 115	3.0 3.0	40	M6 M8
GST05	120 140 160	80 95 110	10 10 10	100 115 130	3.0 3.0 3.5	50	M6 M8 M8
GST06	160 200	110 130	12 12	130 165	3.5 3.5	60	M8 M10
GST07	200 250	130 180	14 15	165 215	3.5 4.0	80	M10 M12
GST09	250 300	180 230	16 18	215 265	4.0 4.0	100	M12 M12
GST11	300 350	230 250	18 20	265 300	4.0 5.0	120	M12 M16
GST14	350 400	250 300	22 24	300 350	5.0 5.0	160	M16 M16



Ventilations

Position of ventilation, sealing elements and oil level check

GST05...09-1

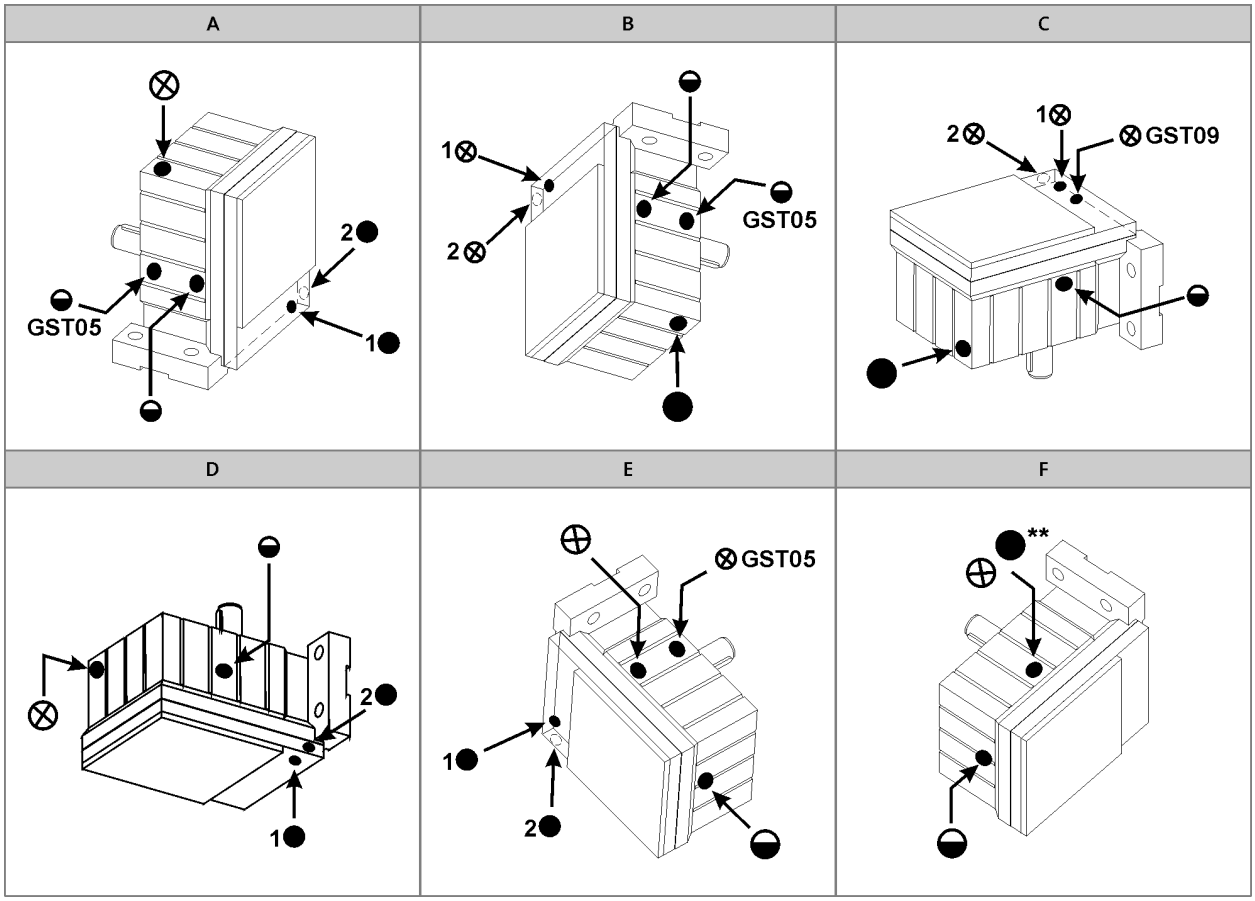

A to F Mounting position
⊗ Ventilation / Oil filler plug
● Oil drain plug
◒ Oil control plug
* On both sides
** On opposite side

Pos.1 standard
Pos.2 only for:
- GST05-1M V□□ 090□□□
- GST05-1M V□□ 100□□□
- GST06-1M V□□ 112□□□
- GST07-1M V□□ 160□□□

6.1



Ventilations

Position of ventilation, sealing elements and oil level check

GST05...14-2

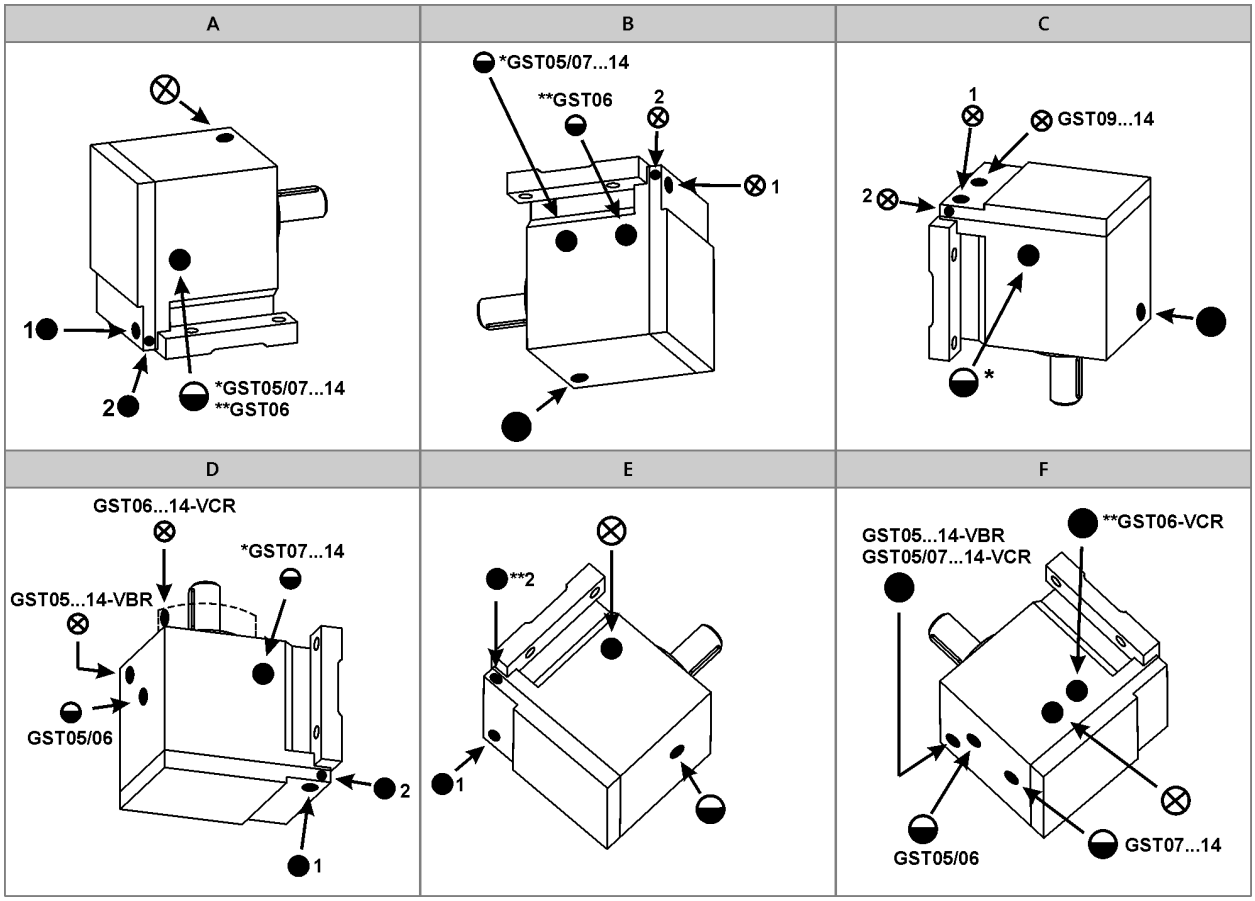

A to F Mounting position
⊗ Ventilation / Oil filler plug
● Oil drain plug
◒ Oil control plug
* On both sides
** On opposite side

Pos.1 standard
Pos.2 only for:
- GST05-2M V□□ 090□□□
- GST05-2M V□□ 100□□□
- GST06-2M V□□ 112□□□
- GST07-2M V□□ 160□□□

6.1



Ventilations

Position of ventilation, sealing elements and oil level check

GST05...14-3

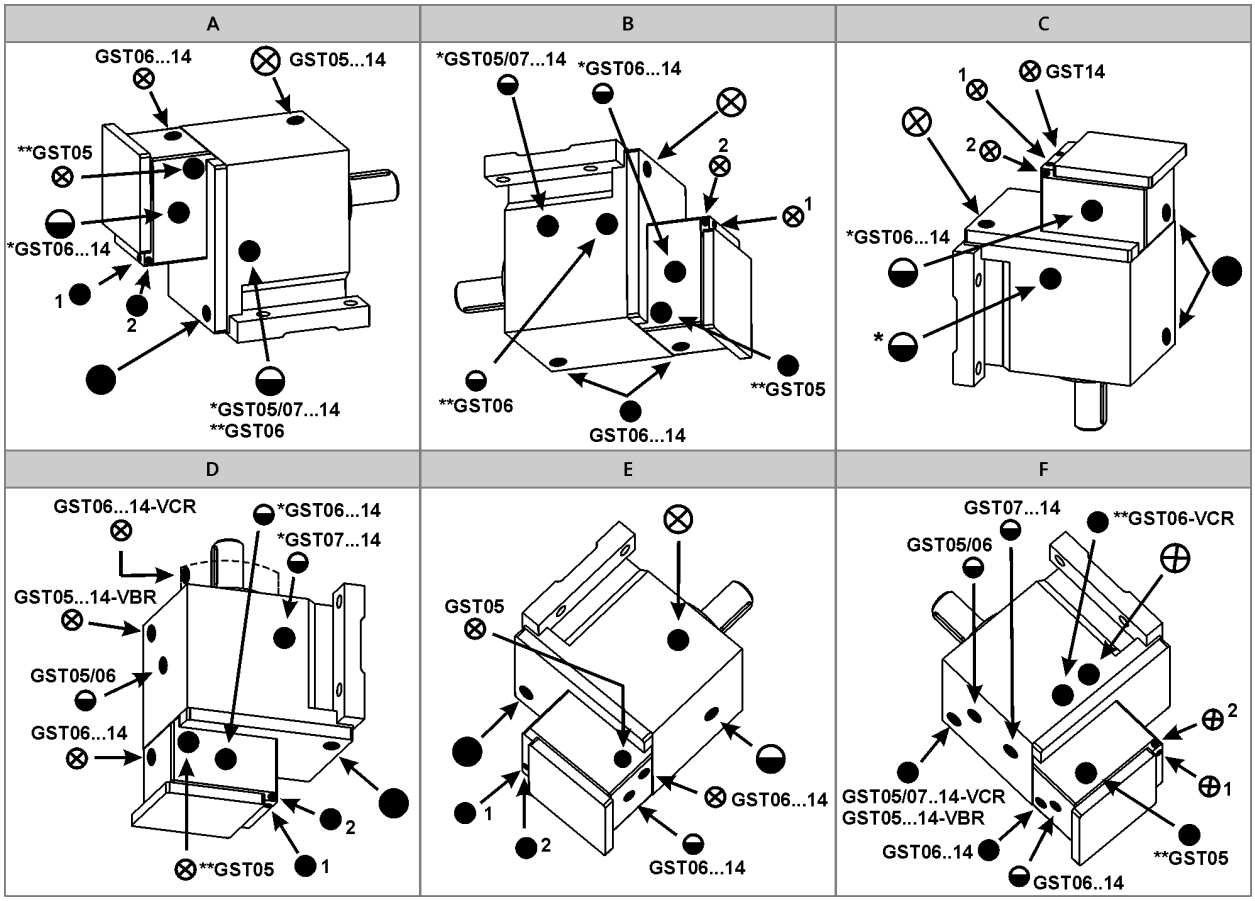

A to F Mounting position
⊗ Ventilation / Oil filler plug
● Oil drain plug
◒ Oil control plug
* On both sides
** On opposite side

Pos.1 standard
Pos.2 only for:
- GST07-3M V□□ 090□□□
- GST07-3M V□□ 100□□□
- GST09-3M V□□ 112□□□

6.1



Ventilations

Compensation reservoir for mounting position C

GST□□-2

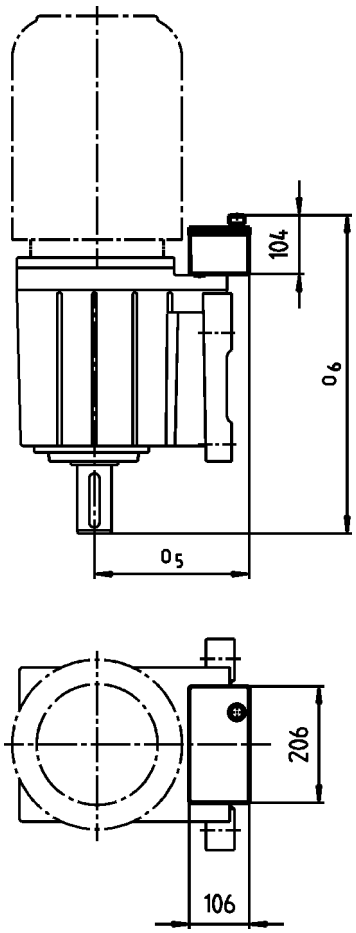

Motor	090 100		112		132		160 180 225	
	o_5	o_6	o_5	o_6	o_5	o_6	o_5	o_6
	[mm]	[mm]	[mm]	[mm]	[mm]	[mm]	[mm]	[mm]
GST09	206	477	226	477	245	477	260	477
GST11	208	536	230	540	254	540	268	540
GST14			252	640	282	640	282	640

► Terminal box position 4 not permitted.

GFL shaft-mounted helical gearbox

Inverter operation
5.5 ... 45 kW (efficiency class IE3)



GFL shaft-mounted helical gearbox

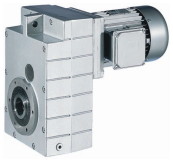

Contents

General information	List of abbreviations	6.2 - 4
	Product key	6.2 - 5
	Product information	6.2 - 7
	Functions and features	6.2 - 8
	Dimensioning	6.2 - 13
	Notes on ordering	6.2 - 18
	Ordering details checklist	6.2 - 19
Technical data	Permissible radial and axial forces at output	6.2 - 23
	Output backlash in angular minutes	6.2 - 27
	Moments of inertia	6.2 - 28
	Weights, 4-pole motors	6.2 - 33
	Additional weights for gearboxes	6.2 - 34
	Selection tables, 4-pole motors	6.2 - 35
	Dimensions, 4-pole motors	6.2 - 48
Accessories	Hollow shaft with shrink disc	6.2 - 81
	Mounting set for hollow shaft circlip: Proposed design for auxiliary tools	6.2 - 83
	Foot mounting in position 3	6.2 - 84
	Foot mounting in position 4	6.2 - 85
	Rubber buffer for torque plate	6.2 - 86
	Ventilations	6.2 - 87

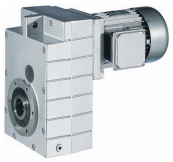

List of abbreviations

$\eta_{c=1}$		Efficiency
c		Load capacity
f_N	[Hz]	Rated frequency
$F_{ax,max}$	[N]	Max. axial force
$F_{rad,max}$	[N]	Max. radial force
H_{max}	[m]	Site altitude
i		Ratio
J	[kgcm²]	Moment of inertia
m	[kg]	Mass
M_2	[Nm]	Output torque
n_2	[r/min]	Output speed
n_N	[r/min]	Rated speed
P_N	[kW]	Rated power
$S_{hü}$	[1/h]	Transition operating frequency
$T_{opr,max}$	[°C]	Max. ambient operating temperature
$T_{opr,min}$	[°C]	Min. ambient operating temperature
$U_{N,\Delta}$	[V]	Rated voltage
$U_{N,Y}$	[V]	Rated voltage

CE	Communauté Européenne
CSA	Canadian Standards Association
DIN	Deutsches Institut für Normung e.V.
EMC	Electromagnetic compatibility
EN	European standard
IEC	International Electrotechnical Commission
IM	International Mounting Code
IP	International Protection Code
NEMA	National Electrical Manufacturers Association
UL	Underwriters Laboratory Listed Product
UR	Underwriters Laboratory Recognized Product
VDE	Verband deutscher Elektrotechniker (Association of German Electrical Engineers)
CCC	China Compulsory Certificate
GOST	Certificate for Russian Federation
cURus	Combined certification marks of UL for the USA and Canada
UkrSEPRO	Certificate for Ukraine

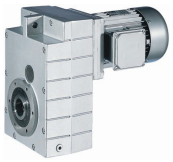

Product key

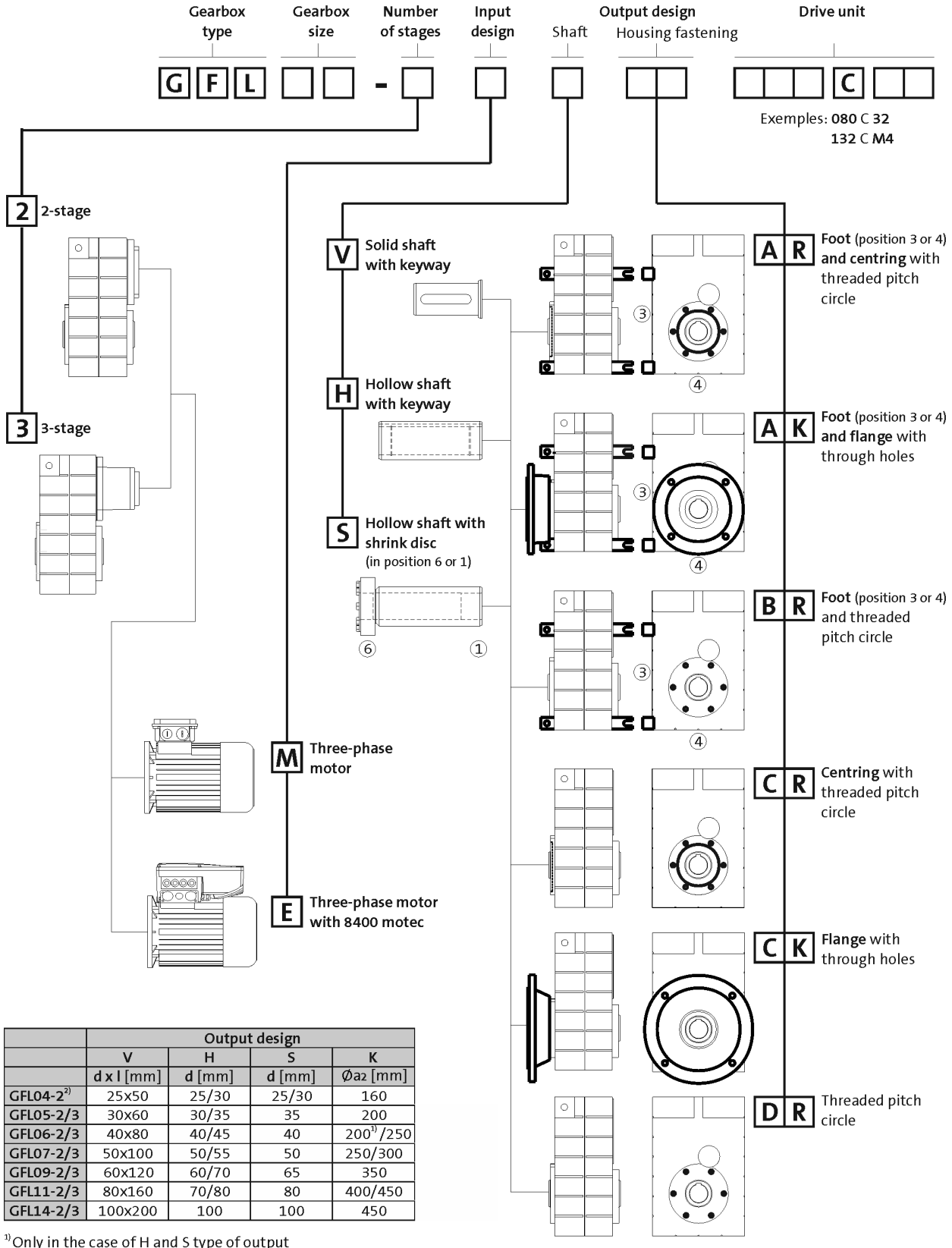

	Output design			
	V	H	S	K
	d x l [mm]	d [mm]	d [mm]	Øa2 [mm]
GFL04-2[2)]	25x50	25/30	25/30	160
GFL05-2/3	30x60	30/35	35	200
GFL06-2/3	40x80	40/45	40	200[1)]/250
GFL07-2/3	50x100	50/55	50	250/300
GFL09-2/3	60x120	60/70	65	350
GFL11-2/3	80x160	70/80	80	400/450
GFL14-2/3	100x200	100	100	450

[1)] Only in the case of H and S type of output
[2)] Output H version not possible with motor size 090

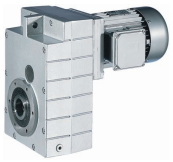

Product key

Mounting position (A to F) and position of system blocks (1 to 6)

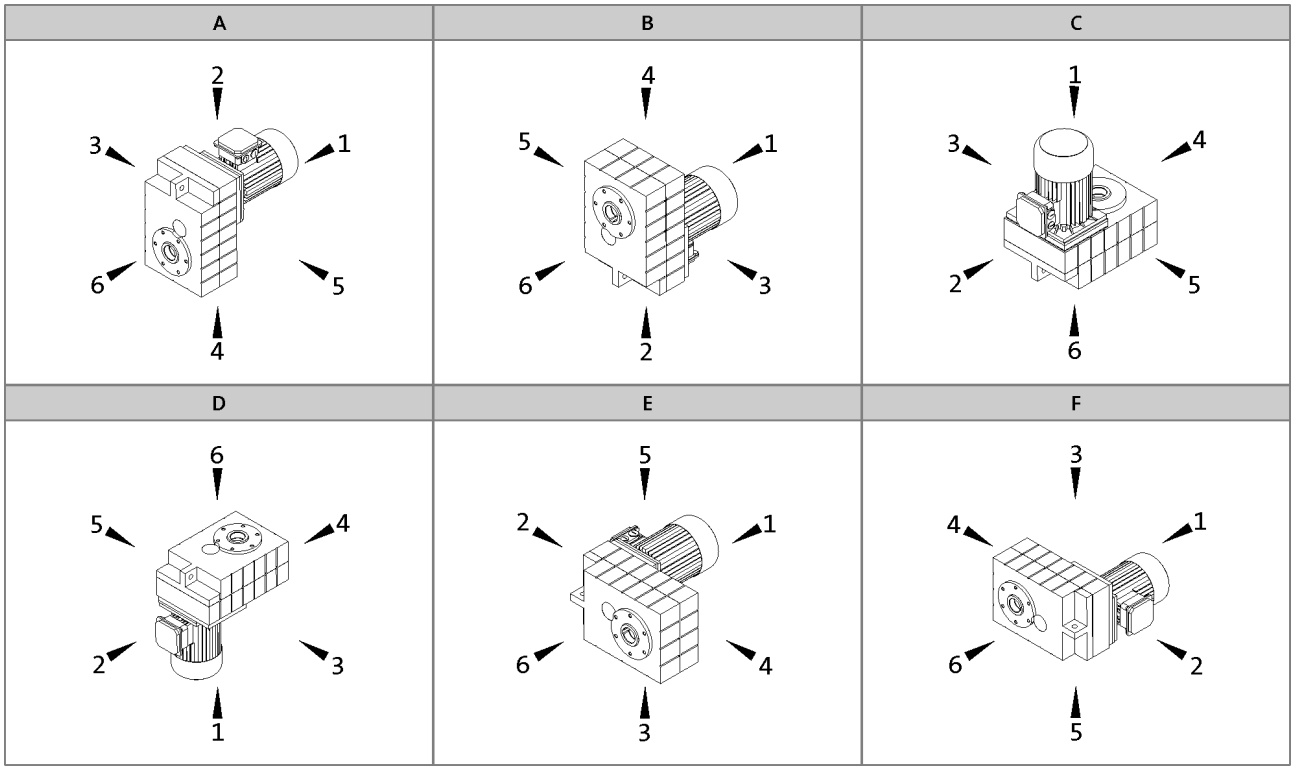

Hollow shaft: 0
Solid shaft: 6
Hollow shaft with shrink disc: 1, 6

Without foot: 0
Foot: 3, 4
Terminal box / motec: 2, 3, 4, 5

Gearbox designs

Basic versions	
Motor efficiency	Standard efficiency Increased efficiency (IE2) Premium efficiency (IE3)
Surface and corrosion protection	OKS-G (primer: grey) OKS-S (paint: RAL 7012)
Lubricant	CLP 460 (mineral)
Ventilation	Oil control plugs for GFL05 to 14 Breather elements for GFL06 ... 14

Options	
Surface and corrosion protection	OKS-S (special paint according to RAL) OKS-M (special paint according to RAL) OKS-L (special paint according to RAL)
Lubricant	CLP HC 320 (synthetic) CLP HC 220 USDA H1 (synthetic)
Shaft sealing rings	Driven shaft: Viton
Ventilation	Breather elements for GFL05 Compensation reservoir for GFL09 to 14-2 in mounting position C
Accessories	Rubber buffer for torque plate Shrink disc cover Mounting set for hollow shaft circlip
Nameplate	Metal nameplate (supplied loose) Adhesive nameplate (supplied loose)

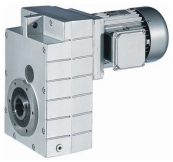

Product information

Lenze provides a geared motor construction kit, which covers a wide range of requirements. Numerous drive-side and output-side options enable precise adaptation of the drive to the specific application. This is the basis for versatile applications and functional scalability of our gearboxes and geared motors.
The modular concept and high power density make extremely compact sizes possible. Optimised teeth profiles and ground gears ensure low-noise operation and low backlash. The gearboxes are of compact and hence space-saving construction.

Types

- 2- and 3-stage gearboxes
- Hollow shaft with keyway or shrink disc
- Solid shaft with keyway
- Foot or flange mounting
- Torque plate, including rubber buffer
- With m500 three-phase AC motors (efficiency class IE3) in the power range 5.5 ... 45 kW

Compact and powerful

In combination with three-phase AC motors, our shaft-mounted helical gearboxes form a compact and effective drive unit. The low level of backlash of the gear teeth ensures highest precision. In addition, they can also distribute the power output and torque via an output shaft on both sides. The gearboxes are available in 2- and 3-stage versions with a torque of up to 11,615 Nm and a ratio of up to i=856.

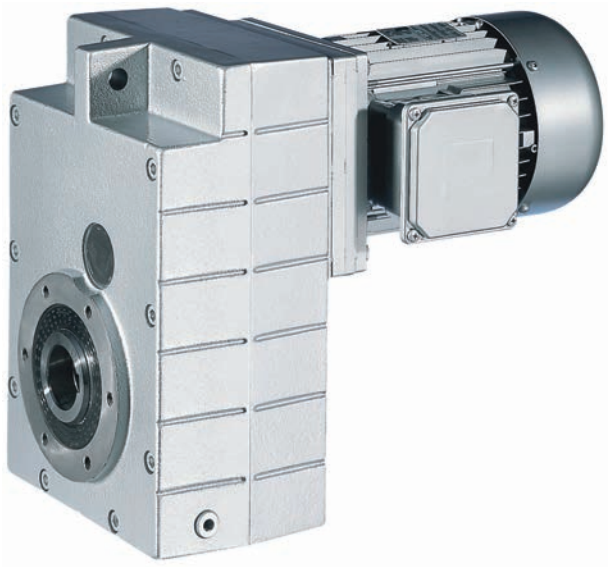

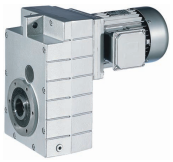

Functions and features

Gearbox type	GFL
Housing	
Design	Cuboid
Material	Aluminium / cast iron
Solid shaft	
Design	with keyway to DIN 6885
Tolerance	k6 (d ≤ 50 mm) m6 (d > 50 mm)
Material	Tempered steel C45 or 42CrMo4
Hollow shaft	
Design	H: with keyway S: smooth
Tolerance	Bore H7
Material	Tempered steel C45
Toothed parts	
Design	Ground tooth flanks Optimised tooth flank geometry
Material	Case-hardened steel
Shaft-hub joint	
	1st stage/prestage/helical (bevel) gearbox: Friction-type connection Output stage (= 2nd, 3rd or 4th stage): Friction-type or positive-fit connection
Shaft sealing rings	
Design	With dust lip
Material	NB / FP
Bearing	
Design	Ball bearing / tapered-roller bearing depending on size and design
Lubricants	
Standard	DIN 51502
Quantities	corresponding to mounting position (see operating instructions)
Mechanical efficiency	
1-stage gearboxes [$\eta_{c=1}$]	
2-stage gearboxes [$\eta_{c=1}$]	0.97
3-stage gearboxes [$\eta_{c=1}$]	0.95
4-stage gearboxes [$\eta_{c=1}$]	
Notes	

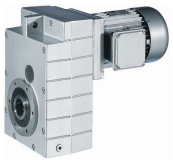

Functions and features

Lubricants

Lenze gearboxes and geared motors are ready for operation on delivery and are filled with lubricants specific to both the drive and the design. The mounting position and design specified in the order are key factors in choosing the volume of lubricant.

The lubricants listed in the lubricant table are approved for use in Lenze drives.

Lubricant table

Mode	CLP 460	CLP HC 320	CLP HC 220 USDA H1
Ambient temperature [°C]	0 ... +40	-25 ... +50	-20 ... +40
Specification	Mineral based oil with additives	Synthetic-based oil (synthetic hydrocarbon / poly-alpha-olefin oil)	
Note			For food processing industry
Changing interval	16000 operating hours not later than after three years (oil temperature 70 to 80 °C)	25000 operating hours not later than after three years (oil temperature 70 to 80 °C)	16000 operating hours not later than after three years (oil temperature 70 to 80 °C)
Fuchs	Fuchs Renolin CLP 460	Fuchs Renolin Unisyn CLP 320	bremer & leguil Cassida Fluid GL 220
Klüber	Klüberoil GEM1-460 N	Klübersynth GEM4-320 N	Klüberoil 4 UH1-220 N
Shell	Shell Omala S2 G 460	Shell Omala S4 GX HD 320	

► Please contact your Lenze sales office if you are operating at ambient temperatures in areas up to< -20 °C bzw. > or up to +40°C.

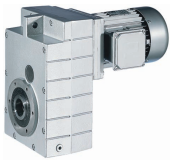

Functions and features

Surface and corrosion protection

For optimum protection of geared motors against ambient conditions, the surface and corrosion protection system (OKS) offers tailor-made solutions.

Various surface coatings combined with other protective measures ensure that the geared motors operate reliably even at high air humidity, in outdoor installations or in the presence of atmospheric impurities. Any colour from the RAL Classic collection can be chosen for the top coat. The geared motors are also available unpainted (no surface and corrosion protection).

Surface and corrosion protection system	Applications	Measures
	Catalogue text	Catalogue text
OKS-G (primed)	• Dependent on subsequent top coat applied	• 2K PUR priming coat (grey) • Zinc-coated screws • Rust-free breather elements Optional measures • Stainless steel nameplate
OKS-S (small)	• Standard applications • Internal installation in heated buildings • Air humidity up to 90%	• Surface coating as per corrosivity category C1 (in line with EN 12944-2) • Zinc-coated screws • Rust-free breather elements Optional measures • Stainless steel nameplate
OKS-M (medium)	• Internal installation in non-heated buildings • Covered, protected external installation • Air humidity up to 95%	• Surface coating as per corrosivity category C2 (in line with EN 12944-2) • Zinc-coated screws • Rust-free breather elements Optional measures • Stainless steel shaft • Stainless steel nameplate • Rust-free shrink disc (on request)
OKS-L (high)	• External installation • Air humidity above 95% • Chemical industry plants • Food industry	• Surface coating as per corrosivity category C3 (in line with EN 12944-2) • Blower cover and B end shield additionally primed • Cable glands with gaskets • Corrosion-resistant brake with cover ring, stainless friction plate, and chrome-plated armature plate (on request) • All screws/screw plugs zinc-coated • Stainless breather elements • Threaded holes that are not used are closed by means of plastic plugs Optional measures • Sealed recesses on motor (on request) • Stainless steel shaft • Stainless steel nameplate • Rust-free shrink disc (on request) • Additional priming coat on cast iron fan • Oil expansion tank and torque plates painted separately and supplied loose

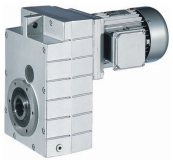

Functions and features

Structure of surface coating

Surface and corrosion protection system	Corrosivity category	Surface coating	Colour
	DIN EN ISO 12944-2	Structure	
Without OKS (uncoated)		Dipping primed gearbox	
OKS-G (primed)		Dipping primed gearbox 2K PUR priming coat	
OKS-S (small)	Comparable to C1	Dipping primed gearbox 2K-PUR top coat	Standard: RAL 7012 Optional: RAL Classic
OKS-M (medium)	Comparable to C2	Dipping primed gearbox 2K PUR priming coat 2K-PUR top coat	Standard: RAL 7012 Optional: RAL Classic
OKS-L (high)	Comparable to C3	Dipping primed gearbox 2K PUR priming coat 2K-PUR top coat	Standard: RAL 7012 Optional: RAL Classic

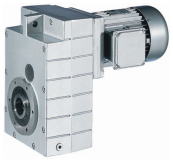

Functions and features

Ventilation

Non-ventilated gearboxes
No ventilation is required for the GFL04 gearbox.

Gearboxes that may optionally be equipped with ventilation
Special measures are not usually required when using the GFL05 gearbox. In borderline cases, e.g. at input speeds > 2000 r/min, we recommend the use of breather elements, which we can supply if required.

Ventilated gearboxes
The gearboxes GFL06 to 14 are supplied with breather elements as standard.

Special measures for mounting position C (motor on top)
We recommend that an oil compensation reservoir is always used with gearbox sizes G□□09 to 14 in this mounting position. This reservoir can be purchased as an option. For illustrations and measures, please refer to the Accessories chapter.

This is not required at higher ratios or low input speeds. Please contact Lenze for confirmation in this case.

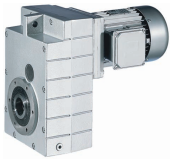

Dimensioning

General information about the data provided in this catalogue

The powers, torques and speeds specified in this catalogue are rounded values and are valid under the following conditions:

- Operating time/day = 8 h (100% OT)
- Duty class I for up to 10 switching operations/h
- Mounting positions and designs in this catalogue
- Standard lubricant
- T_{amb} = 20 °C for gearboxes,
  T_{amb} = 40 °C for motors (in accordance with EN 60034)
- Site altitude < = 1000 m amsl
- The selection tables provide the permissible mechanical powers and torques. For notes on the thermal power limit, see chapter drive dimensioning.
- The rated power specified for motors and geared motors applies to operating mode S1 (in accordance with EN 60034).

Under different operating conditions, the values obtained may vary from those listed here.
In the case of extreme operating conditions, please consult your Lenze sales office.

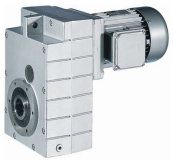

Dimensioning

Thermal power limit

The thermal power limit, defined by the heat balance, limits the permissible gearbox continuous power. It may be less than the mechanical power ratings listed in the selection tables.

The thermal power limit is affected by:
- the churning losses in the lubricant. These are determined by the mounting position and the circumferential speed of the gears;
- the load and the speed
- the ambient conditions: temperature, air circulation, input or dissipation via shafts and the foundation

Please consult your Lenze sales office
- if the following input speeds n_1 are exceeded on a continuous basis (continuous is defined as more than 8 h/day):

Motor frame size	Mounting position A, B, E, F	Mounting position C, D
063 ... 100	3000 r/min	3000 r/min
112 ... 132	3000 r/min	1500 r/min
160 ... 225	2000 r/min	1500 r/min

- if the following input speeds n_1 are exceeded:

Motor frame size	Mounting position A, B, E, F	Mounting position C, D
063 ... 100	4000 r/min	3000 r/min
112 ... 132	4000 r/min	2000 r/min
160 ... 225	3000 r/min	1500 r/min

- or if you are using the following gearbox type, size and ratio combinations at an input speed of n_1 > 1500 r/min:

Gearbox type	Gearbox size	Ratio i
GFL shaft-mounted helical gearbox	07, 09, 11, 14	≤ 16

Possible ways of extending the application area

- synthetic lubricant (option)
- shaft sealing rings made from FP material/Viton (option)
- reduction in lubricant quantity
- cooling of the geared motor by means of air convection on the machine/system

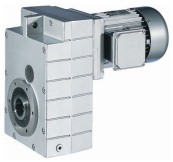

Dimensioning

Load capacity and application factor

Load capacity c of gearbox
Rated value for the load capacity of Lenze geared motors.
- c is the ratio of the permissible rated torque of the gearbox to the rated torque supplied by the drive component (e.g. the built-in Lenze motor).
- The value of c must always be greater than the value of the application factor k calculated for the application.

Requierement: c ≥ k

Application factor k (according to DIN 3990)
Takes into account the influence of temporally variable loads which are actually present during the anticipated operating time of gearboxes and geared motors.
k is determined by:
- the type of load
- the load intensity
- temporal influences

Duty class	Load type	Intensity	
I	Smooth operation, small or light jolts	$F_I \leq 1.25$	$F_I = \frac{\frac{J_L}{i^2} + J_M + J_B + J_Z}{J_M + J_B + J_Z}$
II	Uneven operation, average jolts	$1.25 < F_I \leq 4$	
III	Uneven operation, severe jolts and/or alternating load	$F_I > 4$	

J_L= moment of inertia of the load
i = gearbox ratio
J_M= moment of inertia of the motor
J_B= moment of inertia of the motor brake
J_Z= moment of inertia of additional built-on motor accessories

Application factor (inverter operation)

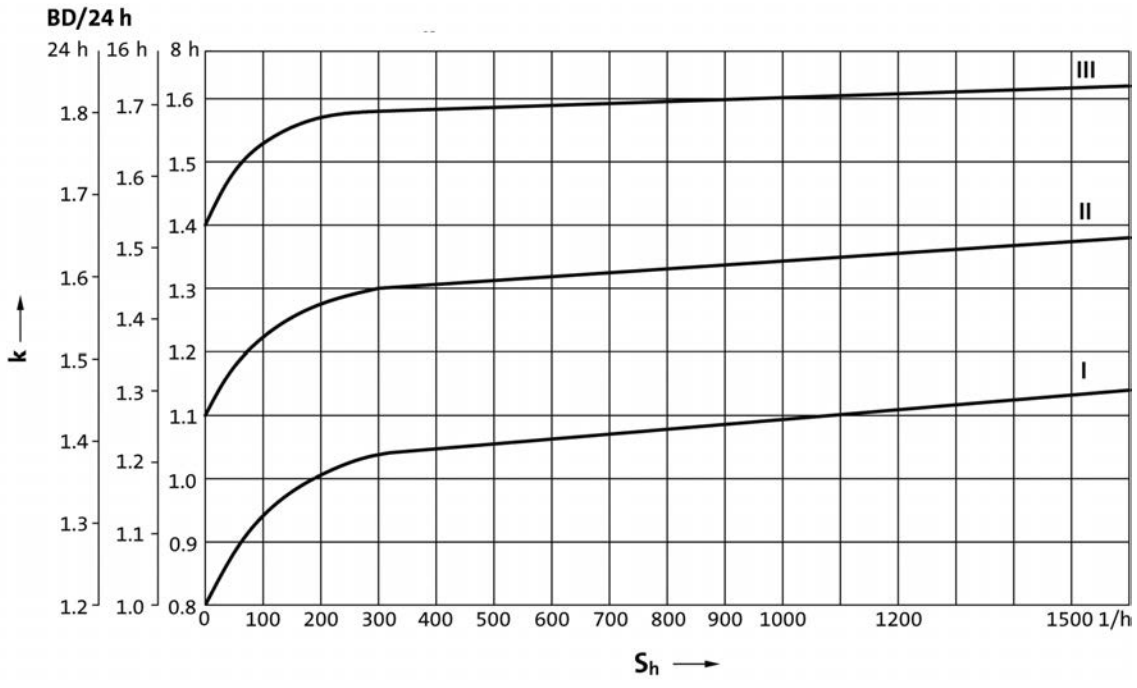

S_h= switching operations/hour

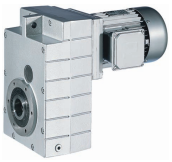

Dimensioning

Torque derating at low motor frequencies

During operation with the rated torque at low speeds (< 20 Hz), the integral fan does not rotate fast enough anymore to ensure sufficient cooling of the motor. In order to prevent overheating, operation without a blower requires a torque reduction of the motor.
The blower cools the motor steadily and irrespective of the motor speed. A torque reduction is not required and the motor can be actuated with its rated torque from 5 Hz to the rated frequency.

The diagram shows the motor frame size-dependent torque reduction for self-ventilated motors, taking the thermal behaviour during actuation of the inverter into consideration.

Torque characteristics

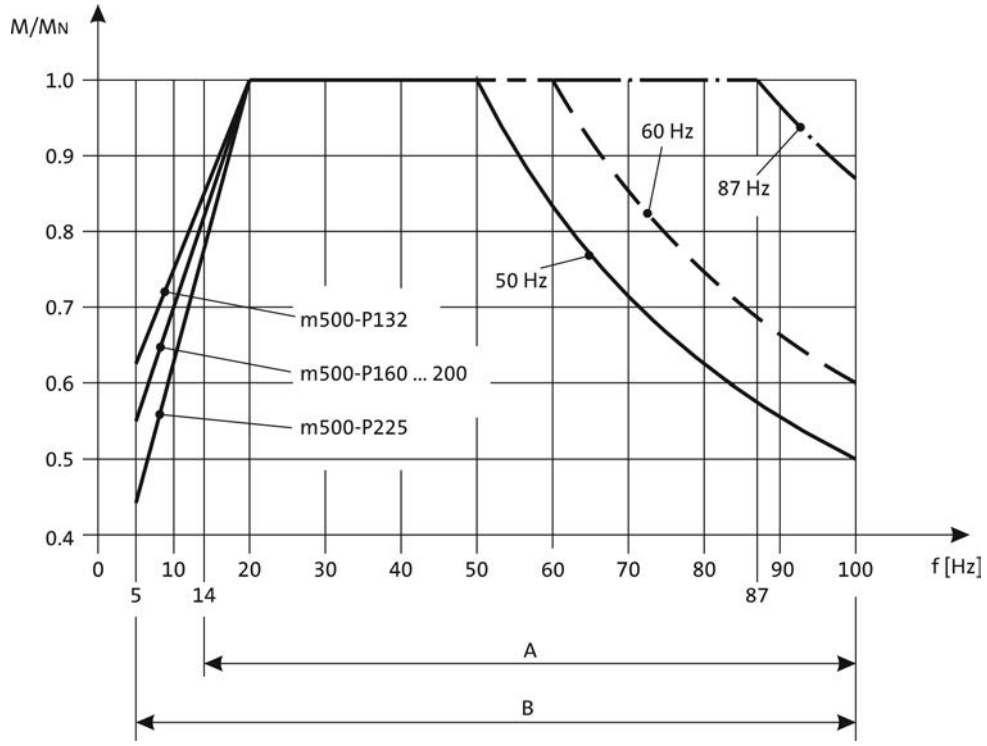

A = Operation with integral fan and brake
B = Operation with integral fan and brake control "Holding current reduction"

6.2

You can use the Drive Solution Designer for precise drive dimensioning.

The Drive Solution Designer helps you to carry out a fast and high-quality drive dimensioning.
The software includes well-founded and proven knowledge on drive applications and electro-mechanical drive components.

Please contact your Lenze sales office.

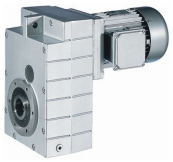

Dimensioning

Notes on the selection tables

The selection tables show the available combinations of gearbox type, number of stages, ratio and motor. They are used only to provide basic orientation.
The following legend indicates the structure of the selection tables.

Rated power Prated of the drive motor depending on the rated frequency

50 Hz: P_N = 5.5 kW
87 Hz: P_N = 9.6 kW

2-stufige Getriebe ← **Number of the gear stage of the gearbox**

Torque diagram

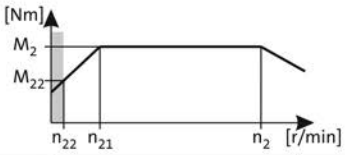

Mains operation 400 V, 50 Hz			Inverter operation 5 Hz -		- 20 Hz		- 50 Hz (1:10)			- 87 Hz (1:17.4)			i	Product		
n_2 [r/min]	M_2 [Nm]	c	n_{22} [r/min]	M_{22} [Nm]	n_{21} [r/min]	M_2 [Nm]	n_2 [r/min]	M_2 [Nm]	c	n_2 [r/min]	M_2 [Nm]	c		GFL	m500	
397	128	2.7	40	80	163	128	397	128	2.7	687	129	2.2	3.675	GFL06	-P132M4	49
314	162	4.0	31	101	129	162	314	162	4.0				4.643	GFL07	-P132M4	53

Product Gearbox

Product Motor

Ratio i

Page number for dimensions

Load capacity c of the gearbox
c is the ratio between the permissible rated torque of the gearbox and the rated torque of the three-phase AC motor (converted to the driven shaft).
c must be always higher than the service factor **k** determined for the application **k**.

$$c = \frac{M_{2,zul}}{M_{1N} \cdot i \cdot \eta_{Getr}} > k$$

Mains operation
Output speed **n2**
Output torque **M2**

Inverter operation
The speed and torque data are valid for self-ventilated and forced ventilated drives. Forced ventilated drives can always output the torque **M2** in the entire setting ranges. In the case of self-ventilated drives, a reduction to **M22** is required in the lower speed range.

The following applies to self-ventilated geared motors:
n22 is the minimum speed where the torque **M22** is permissible, from **n21** to **n2**, the maximum torque is **M2**
The following applies to forced ventilated geared motors:
From the minimum speed **n22** to **n2**, the maximum torque is **M2**

Motor voltages

The power values and torques indicated in the selection tables refer to the following motor voltages:
- 50 Hz : Δ 230 V / Y 400 V
- 87 Hz : 400 V

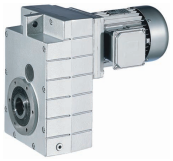

Notes on ordering

We want to be sure that you receive the correct products in good time.

To allow us to achieve this we need:
- your address and your company data
- our product key for the individual products in this catalogue
- your delivery date and delivery address

Ordering procedure
Please use the ordering information checklist to ensure that you provide all the ordering information required for the various products.

The ordering information checklist, the product key, the basic versions, options, mounting position and position of the system blocks will be found in the General – Product key section.

A list of Lenze's worldwide sales offices can be found on the Internet: www.Lenze.com.

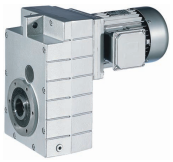

Ordering details checklist

☐ **Offer**

Page __ of __

☐ **Order**

Customer No.

Job No.

Fax No. _____

Sender

Company _____ Made out by (name) _____

Street/P.O. Box _____ Department _____

P.O. Box, City _____ Telephone No. _____

Date _____ Signature _____

Delivery address (if different)

Street/P.O. Box _____ Desired delivery date _____

P.O. Box, City _____ Dispatching notes _____

Invoice recipient (if different)

Street/P.O. Box _____

Postal code, City _____

6.2

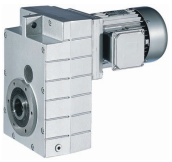

Ordering details checklist

Customer No. ☐☐☐☐☐☐☐☐

Job No. ☐☐☐☐☐☐☐☐☐☐

Page __

Quantity ☐

Efficiency class ☐ High efficiency (IE3)

Rated frequency ☐ 50 Hz ☐ 60 Hz ☐ 87 Hz

Ratio i ☐

GFL ☐☐ – ☐ 2 / 3 ☐ M / E ☐ V / H / S ☐ A / B / C / D ☐ R / K

Motor frame size ☐☐☐C☐☐

Hollow shaft d = ☐ mm

Flange a_2 = ☐ mm

Mounting position A ☐ B ☐ C ☐ D ☐ E ☐ F ☐

Position of system blocks

Shaft/shrink disc			Foot			Terminal box			
0	6	1	0	3	4	2	3	4	5
☐	☐	☐	☐	☐	☐	☐	☐	☐	☐

Surface and corrosion protection ☐ OKS-S colour: RAL 7012 ☐ OKS-G (primed)

Options

Special lubricants ☐ CLP HC 320 (synthetic) ☐ CLP HC 220 USDA H1 (for the food industry)

Surface and corrosion protection ☐ OKS-S (small) ☐ OKS-M (medium) ☐ ☐ OKS-L (high) ☐ OKS-G (primed)

Accessories ☐ Rubber buffer for torque support ☐ Mounting set for hollow-shaft circlip ☐ Hollow shaft cover, hoseproof

Shaft sealing rings ☐ Viton

Breathing ☐ Breather elements for GFL05 ☐ Compensation reservoir in mounting position for GFL09 ... 14-2

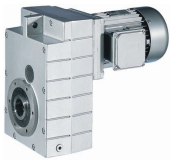

Ordering details checklist

Three-phase AC motors options

Customer No. ☐☐☐☐☐☐☐☐

Job No. ☐☐☐☐☐☐☐☐☐☐

Page __

Motor connection

Terminal box
- ☐ with plug-in connector ICN 6-pin. Adhere to permissible rated motor current 20 A!
- ☐ with plug-in connector ICN 8-pin. Adhere to permissible rated motor current 20 A!
- ☐ with plug-in connector HAN10E. Adhere to permissible rated current 16 A!
- ☐ with plug-in connector HAN-Modular. Adhere to permissible rated current 16 / 40 A!

Cable entry — in position 1 ☐ 2 ☐ 3 ☐ 4 ☐ 5 ☐

Blower

☐ 1~ ☐ 3~

☐ Terminal box with plug-in connector ICN

Terminal box position 2 ☐ 3 ☐ 4 ☐ 5 ☐

Spring-applied brake

Brake version ☐ Standard

Brake size ☐

Characteristic torque ☐ Nm

Rated voltage AC ☐ DC ☐ ☐ V

Rectifier — Only in the case of AC supply voltage

- ☐ Half-wave rectifier
- ☐ Bridge rectifier
- ☐ Bridge/half-wave rectifier (overexcitation)
- ☐ Bridge/half-wave rectifier (holding current reduction)

Brake options — Manual release lever in position 2 ☐ 3 ☐ 4 ☐ 5 ☐

☐ Low-noise version (Standard in the case of brake with speed/position encoder)

6.2

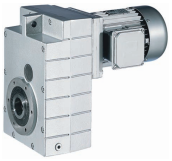

Ordering details checklist

Three-phase AC motors options

Customer No. ☐☐☐☐☐☐☐☐

Job No. ☐☐☐☐☐☐☐☐☐☐

Page __

Speed/position encoder

Resolver ☐ RS1

Incremental encoder HTL ☐ IG128-24V-H ☐ IG512-24V-H ☐ IG1024-24V-H ☐ IG2048-24V-H

Incremental encoder TTL ☐ IG512-5V-T ☐ IG1024-5V-T ☐ IG2048-5V-T

Feedback with ICN connector ☐ IG128-24V-H not possible with plug-in connector!

Motor protection

☐ TKO ☐ KTY 83-110 ☐ KTY 84-130

☐ PTC

Further options

☐ 2nd nameplate (adhesive nameplate/metal nameplate)

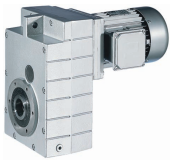

Permissible radial and axial forces at output

Permissible radial force
$F_{rad,per} = \min(f_w \times f_\alpha \times F_{rad,max}\ ;\ f_w \times F_{rad,max}$ at $n_2 \leq 16$ r/min)

Permissible axial force
$F_{ax,per} = F_{ax,max}$ if $F_{rad} = 0$

If F_{rad} **and** $F_{ax} \neq 0$, please contact your Lenze sales office.

Application of forces

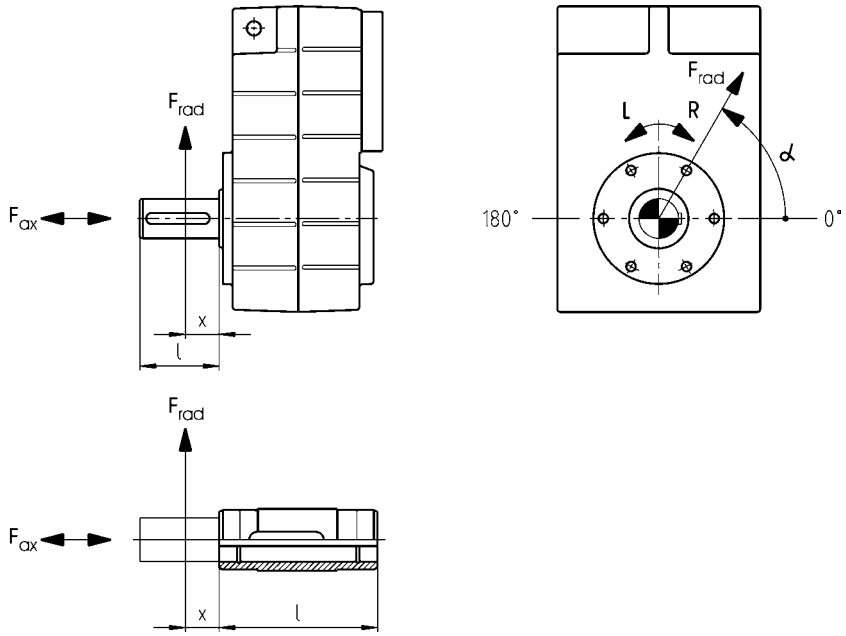

Effective direction factor f_α at output shaft

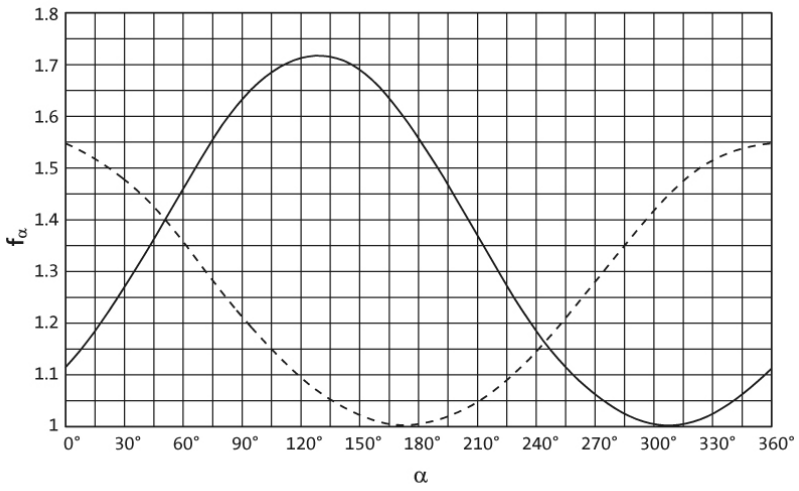

——— Direction of rotation R
— — — Direction of rotation L

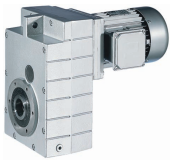

Permissible radial and axial forces at output

Additional load factor f_w at output shaft

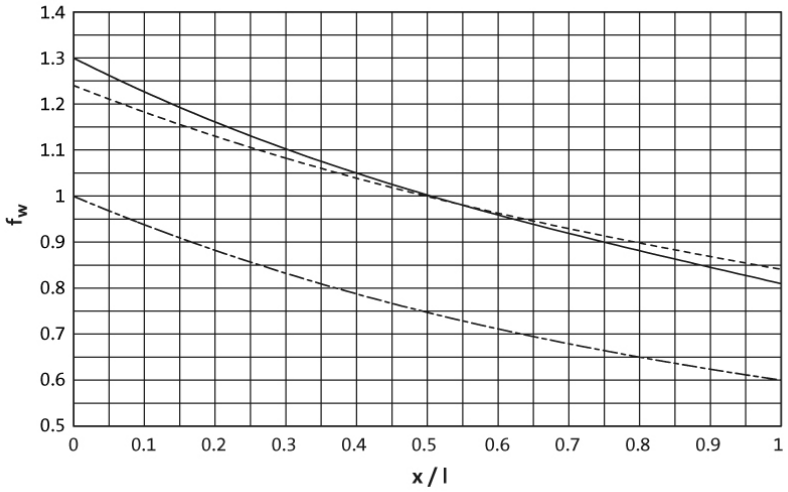

——— Solid shaft (V□□)
— · — Hollow shaft (H□□)
— — — Solid shaft with flange (V□K)

GFL□□-2/3□ H□□

Size	n_2 [r/min]									
Gearbox	1000	630	400	250	160	100	63	40	25	≤16

	Max. radial force, Hollow shaft									
	$F_{rad,max}$	$F_{rad,max}$	$F_{rad,max}$	$F_{rad,max}$	$F_{rad,max}$	$F_{rad,max}$	$F_{rad,max}$	$F_{rad,max}$	$F_{rad,max}$	$F_{rad,max}$
	[N]	[N]	[N]	[N]	[N]	[N]	[N]	[N]	[N]	[N]
GFL04	2100	2700	2800	3200	3800	4600	5500	6300	7000	7000
GFL05	1800	2400	3000	3400	4100	5000	6000	7100	8000	8000
GFL06	2400	3300	4300	4700	5000	6600	8500	10800	12000	12000
GFL07	2200	3400	4500	5100	6400	7900	9300	11500	15000	16000
GFL09			5000	6000	7200	10500	13000	15000	22000	24000
GFL11			7300	8700	10000	14200	19000	23000	27000	30000
GFL14			8000	9000	9500	11500	14000	18000	30000	45000

	Max. axial force, Hollow shaft									
	$F_{ax,max}$	$F_{ax,max}$	$F_{ax,max}$	$F_{ax,max}$	$F_{ax,max}$	$F_{ax,max}$	$F_{ax,max}$	$F_{ax,max}$	$F_{ax,max}$	$F_{ax,max}$
	[N]	[N]	[N]	[N]	[N]	[N]	[N]	[N]	[N]	[N]
GFL04	1300	1700	2200	2600	3200	4200	5300	5500	5500	5500
GFL05	1600	2200	2800	3600	4200	5900	6600	6600	6600	6600
GFL06	2400	3200	4000	5200	6000	8500	10000	10000	10000	10000
GFL07	2000	2700	3400	4700	6000	8500	12000	14000	14000	14000
GFL09			3100	4200	5800	10000	13500	17000	21000	21000
GFL11			4700	6000	7500	14000	19000	25000	27000	27000
GFL14			4000	5000	6200	7500	11000	17500	31000	35000

- Application of force F_{rad}: at hollow shaft end face (x = 0)
- $F_{ax,max}$ only valid with F_{rad} = 0
- Neither radial nor axial forces are permissible for the hollow shaft with shrink disc (S□□).

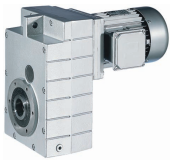

Permissible radial and axial forces at output

GFL□□-2/3□ V□R

Size	n_2 [r/min]									
Gearbox	1000	630	400	250	160	100	63	40	25	≤16

	Max. radial force, Solid shaft without flange									
	$F_{rad,max}$	$F_{rad,max}$	$F_{rad,max}$	$F_{rad,max}$	$F_{rad,max}$	$F_{rad,max}$	$F_{rad,max}$	$F_{rad,max}$	$F_{rad,max}$	$F_{rad,max}$
	[N]	[N]	[N]	[N]	[N]	[N]	[N]	[N]	[N]	[N]
GFL04	1650	2100	2300	2700	3200	3600	3600	3600	3600	3600
GFL05	1400	1900	2400	2700	3200	4000	4800	5800	6200	6200
GFL06	1850	2500	3200	3600	3900	5100	6500	8400	9000	9000
GFL07	1650	2600	3200	3600	3900	5100	6500	8400	9000	9000
GFL09 [1]			3800	4400	5500	8000	10000	12000	18000	18000
GFL11 [1]			5500	6300	7300	11200	14500	17400	20500	23000
GFL14			47000	54000	62000	65000	65000	65000	65000	65000

	Max. axial force, Solid shaft without flange									
	$F_{ax,max}$	$F_{ax,max}$	$F_{ax,max}$	$F_{ax,max}$	$F_{ax,max}$	$F_{ax,max}$	$F_{ax,max}$	$F_{ax,max}$	$F_{ax,max}$	$F_{ax,max}$
	[N]	[N]	[N]	[N]	[N]	[N]	[N]	[N]	[N]	[N]
GFL04	1300	1700	2200	2600	3200	4200	5300	5500	5500	5500
GFL05	1600	2200	2800	3600	4200	5900	6600	6600	6600	6600
GFL06	2400	3200	4000	5200	6000	8500	10000	10000	10000	10000
GFL07	2000	2700	3400	4700	6000	8500	12000	14000	14000	14000
GFL09 [1]			3100	4200	5800	10000	13500	17000	21000	21000
GFL11 [1]			4700	6000	7500	14000	19000	25000	27000	27000
GFL14			25000	27000	29000	32000	35000	35000	35000	35000

[1] Reinforced output shaft bearings are available on request for V□R versions.

- Application of force F_{rad}: centre of shaft journal (x = l/2)
- $F_{ax,max}$ only valid with F_{rad} = 0

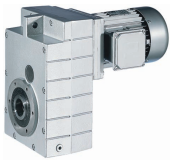

Permissible radial and axial forces at output

GFL□□-2/3□ V□K

Size	n_2 [r/min]									
Gearbox	1000	630	400	250	160	100	63	40	25	≤16

	Max. radial force, Solid shaft with flange									
	$F_{rad,max}$	$F_{rad,max}$	$F_{rad,max}$	$F_{rad,max}$	$F_{rad,max}$	$F_{rad,max}$	$F_{rad,max}$	$F_{rad,max}$	$F_{rad,max}$	$F_{rad,max}$
	[N]	[N]	[N]	[N]	[N]	[N]	[N]	[N]	[N]	[N]
GFL04	2300	2800	3200	3700	4400	4600	4600	4600	4600	4600
GFL05	2900	3700	4300	5100	5900	6800	7000	7000	7000	7000
GFL06	4000	5000	6100	7000	7800	9600	10000	10000	10000	10000
GFL07	4000	5200	6400	7400	8900	10500	12000	13000	14000	14000
GFL09			7800	9000	10500	14000	15000	15000	15000	15000
GFL11			12500	14500	17000	21500	26000	30000	30000	30000
GFL14			18000	20000	23000	27500	32000	38000	43000	43000

	Max. axial force, Solid shaft with flange									
	$F_{ax,max}$	$F_{ax,max}$	$F_{ax,max}$	$F_{ax,max}$	$F_{ax,max}$	$F_{ax,max}$	$F_{ax,max}$	$F_{ax,max}$	$F_{ax,max}$	$F_{ax,max}$
	[N]	[N]	[N]	[N]	[N]	[N]	[N]	[N]	[N]	[N]
GFL04	1300	1700	2200	2600	3200	4200	4400	4400	4400	4400
GFL05	1800	2400	3100	3900	4800	6400	6600	6600	6600	6600
GFL06	2500	3400	4300	5500	6500	8500	10000	10000	10000	10000
GFL07	3600	4800	6100	6500	7000	9500	11500	11500	11500	11500
GFL09			6100	6500	7000	9500	11500	11500	11500	11500
GFL11			6800	8500	10500	17000	22000	27000	27000	27000
GFL14			6000	8000	10000	13000	19000	26000	35000	35000

- Application of force F_{rad}: centre of shaft journal (x = l/2)
- $F_{ax,max}$ only valid with F_{rad} = 0

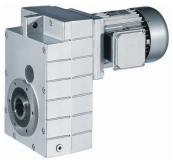

Output backlash in angular minutes

► Backlash ϕ depending on ratio i

GFL04 to 14-2

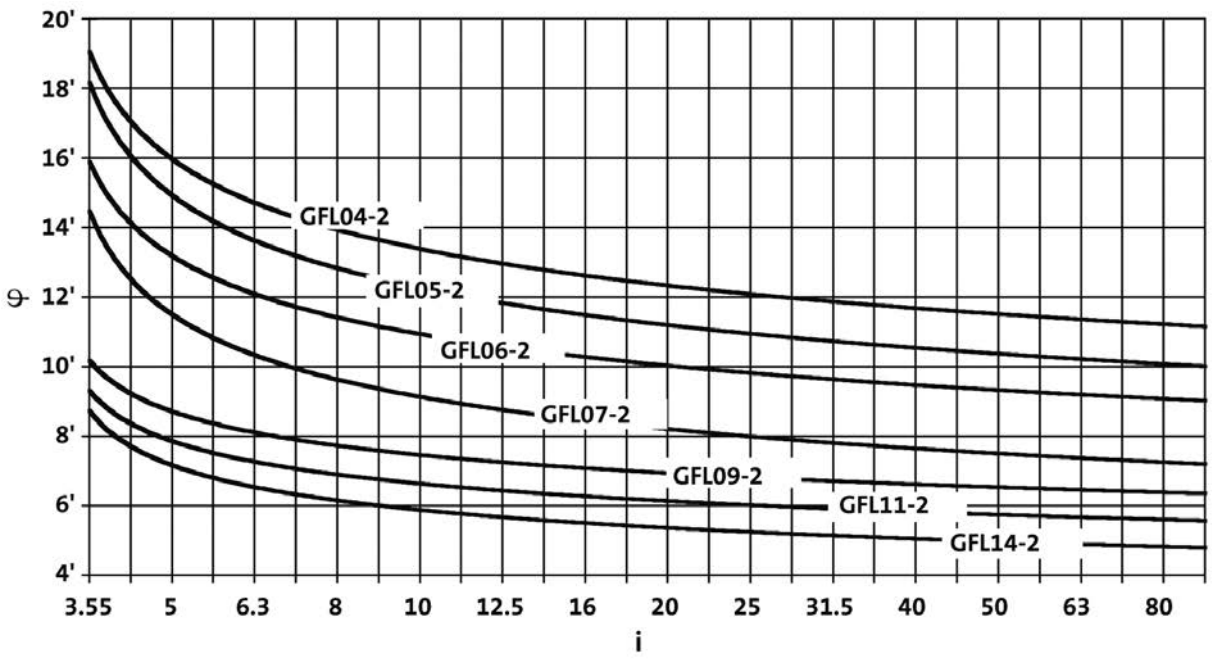

GFL05 to 14-3

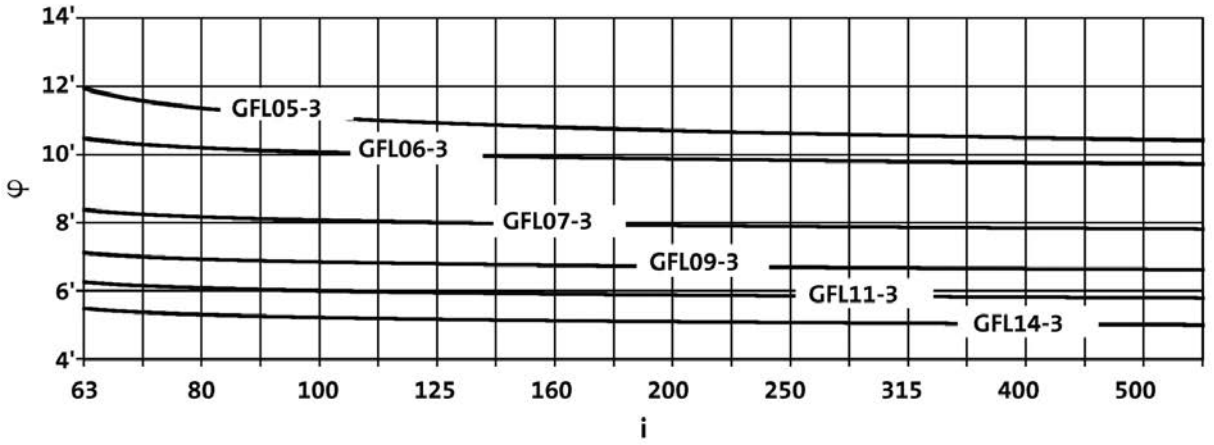

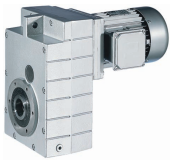

Moments of inertia

GFL□□-2

► Moment of inertia (J) depending on ratio i

Gearbox			GFL04
3.659	J	[kgcm²]	1.510
5.018	J	[kgcm²]	0.858
5.833	J	[kgcm²]	0.925
6.422	J	[kgcm²]	0.555
7.025	J	[kgcm²]	0.473
8.379	J	[kgcm²]	0.666
9.333	J	[kgcm²]	0.613
10.238	J	[kgcm²]	0.366
11.491	J	[kgcm²]	0.410
12.800	J	[kgcm²]	0.382
14.706	J	[kgcm²]	0.282
16.087	J	[kgcm²]	0.245
17.920	J	[kgcm²]	0.230
20.519	J	[kgcm²]	0.171
22.857	J	[kgcm²]	0.163
25.136	J	[kgcm²]	0.129
28.000	J	[kgcm²]	0.123
31.600	J	[kgcm²]	0.086
35.200	J	[kgcm²]	0.082
40.697	J	[kgcm²]	0.058
45.333	J	[kgcm²]	0.056
51.579	J	[kgcm²]	0.038
57.455	J	[kgcm²]	0.037
64.636	J	[kgcm²]	0.026
72.000	J	[kgcm²]	0.025
85.156	J	[kgcm²]	0.016
94.857	J	[kgcm²]	0.015

Gearbox			GFL05
3.333	J	[kgcm²]	1.677
4.571	J	[kgcm²]	2.133
5.133	J	[kgcm²]	2.372
5.667	J	[kgcm²]	2.329
6.400	J	[kgcm²]	0.822
7.040	J	[kgcm²]	1.470
7.771	J	[kgcm²]	1.450
9.010	J	[kgcm²]	0.951
9.946	J	[kgcm²]	0.885
11.360	J	[kgcm²]	1.082
12.800	J	[kgcm²]	1.012
14.538	J	[kgcm²]	0.746
15.904	J	[kgcm²]	0.603
17.920	J	[kgcm²]	0.609
20.286	J	[kgcm²]	0.428
22.857	J	[kgcm²]	0.434
24.850	J	[kgcm²]	0.345
28.000	J	[kgcm²]	0.331
32.344	J	[kgcm²]	0.204
36.444	J	[kgcm²]	0.195
40.233	J	[kgcm²]	0.148
45.333	J	[kgcm²]	0.142
52.067	J	[kgcm²]	0.093
58.667	J	[kgcm²]	0.090
63.190	J	[kgcm²]	0.068
71.200	J	[kgcm²]	0.064
80.763	J	[kgcm²]	0.043
91.000	J	[kgcm²]	0.042

► The moments of inertia relate to the drive shaft of the gearbox.
► The total moment of inertia is calculated by adding the values of the gearbox, motor and accessories.

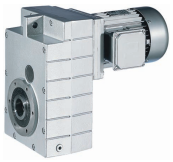

Moments of inertia

GFL□□-2

► Moment of inertia (J) depending on ratio i

Gearbox			GFL06
3.675	J	[kgcm²]	7.755
5.211	J	[kgcm²]	6.636
5.750	J	[kgcm²]	6.044
6.450	J	[kgcm²]	3.651
7.147	J	[kgcm²]	4.044
8.400	J	[kgcm²]	4.264
9.463	J	[kgcm²]	3.879
10.092	J	[kgcm²]	2.520
11.520	J	[kgcm²]	1.730
12.978	J	[kgcm²]	2.610
14.743	J	[kgcm²]	1.950
16.128	J	[kgcm²]	1.680
18.169	J	[kgcm²]	1.570
20.571	J	[kgcm²]	1.190
23.175	J	[kgcm²]	1.130
25.200	J	[kgcm²]	0.904
28.389	J	[kgcm²]	0.861
32.800	J	[kgcm²]	0.581
36.951	J	[kgcm²]	0.556
40.800	J	[kgcm²]	0.425
45.963	J	[kgcm²]	0.407
52.800	J	[kgcm²]	0.264
59.481	J	[kgcm²]	0.251
64.080	J	[kgcm²]	0.193
72.189	J	[kgcm²]	0.187
81.000	J	[kgcm²]	0.125
91.250	J	[kgcm²]	0.121

Gearbox			GFL07
3.350	J	[kgcm²]	19.570
4.643	J	[kgcm²]	11.988
5.159	J	[kgcm²]	11.120
5.695	J	[kgcm²]	18.094
6.400	J	[kgcm²]	9.831
7.150	J	[kgcm²]	11.878
8.324	J	[kgcm²]	13.113
9.379	J	[kgcm²]	12.037
9.714	J	[kgcm²]	8.030
11.538	J	[kgcm²]	8.520
13.000	J	[kgcm²]	7.970
14.200	J	[kgcm²]	6.350
15.904	J	[kgcm²]	5.270
17.920	J	[kgcm²]	4.980
20.286	J	[kgcm²]	3.470
22.857	J	[kgcm²]	3.268
24.850	J	[kgcm²]	2.645
28.000	J	[kgcm²]	2.525
32.344	J	[kgcm²]	1.690
36.444	J	[kgcm²]	1.610
39.642	J	[kgcm²]	1.250
44.667	J	[kgcm²]	1.200
52.067	J	[kgcm²]	0.783
58.667	J	[kgcm²]	0.753
63.190	J	[kgcm²]	0.573
71.200	J	[kgcm²]	0.555
79.875	J	[kgcm²]	0.366
90.000	J	[kgcm²]	0.358

► The moments of inertia relate to the drive shaft of the gearbox.
► The total moment of inertia is calculated by adding the values of the gearbox, motor and accessories.

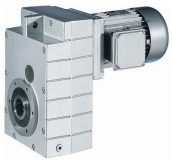

Moments of inertia

GFL□□-2

► Moment of inertia (J) depending on ratio i

Gearbox			GFL09
6.864	J	[kgcm²]	41.300
7.466	J	[kgcm²]	38.700
9.010	J	[kgcm²]	26.800
9.799	J	[kgcm²]	25.300
11.167	J	[kgcm²]	19.500
12.307	J	[kgcm²]	27.600
14.333	J	[kgcm²]	20.000
16.333	J	[kgcm²]	15.500
18.407	J	[kgcm²]	14.600
19.667	J	[kgcm²]	12.100
22.164	J	[kgcm²]	11.300
24.111	J	[kgcm²]	9.040
27.173	J	[kgcm²]	8.630
32.667	J	[kgcm²]	5.430
36.815	J	[kgcm²]	5.210
39.667	J	[kgcm²]	4.070
44.704	J	[kgcm²]	3.920
51.333	J	[kgcm²]	2.590
57.852	J	[kgcm²]	2.500
62.300	J	[kgcm²]	1.890
70.211	J	[kgcm²]	1.830
78.750	J	[kgcm²]	1.250
88.750	J	[kgcm²]	1.210

Gearbox			GFL11
6.864	J	[kgcm²]	124.000
7.466	J	[kgcm²]	116.000
9.010	J	[kgcm²]	79.600
9.799	J	[kgcm²]	74.800
10.720	J	[kgcm²]	65.000
12.480	J	[kgcm²]	81.500
14.538	J	[kgcm²]	58.400
15.904	J	[kgcm²]	51.300
17.920	J	[kgcm²]	48.300
20.286	J	[kgcm²]	36.100
22.857	J	[kgcm²]	34.300
24.850	J	[kgcm²]	26.900
28.000	J	[kgcm²]	25.700
32.739	J	[kgcm²]	17.100
36.889	J	[kgcm²]	16.500
40.233	J	[kgcm²]	12.600
45.333	J	[kgcm²]	12.200
52.067	J	[kgcm²]	8.080
58.667	J	[kgcm²]	7.810
63.190	J	[kgcm²]	5.900
71.200	J	[kgcm²]	5.720
79.875	J	[kgcm²]	3.870
90.000	J	[kgcm²]	3.760

Gearbox			GFL14
7.150	J	[kgcm²]	344.000
7.777	J	[kgcm²]	321.000
8.800	J	[kgcm²]	247.000
9.571	J	[kgcm²]	232.000
11.538	J	[kgcm²]	242.000
13.000	J	[kgcm²]	225.000
14.200	J	[kgcm²]	625.000
15.620	J	[kgcm²]	156.000
17.600	J	[kgcm²]	146.000
19.948	J	[kgcm²]	111.000
22.476	J	[kgcm²]	105.000
24.456	J	[kgcm²]	83.200
27.556	J	[kgcm²]	79.400
32.344	J	[kgcm²]	52.900
36.444	J	[kgcm²]	50.700
39.642	J	[kgcm²]	38.000
44.667	J	[kgcm²]	36.600
52.067	J	[kgcm²]	24.600
58.667	J	[kgcm²]	23.800
63.190	J	[kgcm²]	18.000
71.200	J	[kgcm²]	17.400
79.875	J	[kgcm²]	11.800
90.000	J	[kgcm²]	11.500

► The moments of inertia relate to the drive shaft of the gearbox.
► The total moment of inertia is calculated by adding the values of the gearbox, motor and accessories.

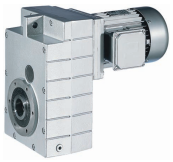

Moments of inertia

GFL□□-3

► Moment of inertia (J) depending on ratio i

Gearbox			GFL05
61.653	J	[kgcm²]	0.202
78.639	J	[kgcm²]	0.145
90.123	J	[kgcm²]	0.197
101.547	J	[kgcm²]	0.196
114.952	J	[kgcm²]	0.142
129.524	J	[kgcm²]	0.141
140.817	J	[kgcm²]	0.109
158.667	J	[kgcm²]	0.109
177.027	J	[kgcm²]	0.073
199.467	J	[kgcm²]	0.073
227.989	J	[kgcm²]	0.051
256.889	J	[kgcm²]	0.050
288.948	J	[kgcm²]	0.033
325.576	J	[kgcm²]	0.033
362.100	J	[kgcm²]	0.023
408.000	J	[kgcm²]	0.023
477.052	J	[kgcm²]	0.014
537.524	J	[kgcm²]	0.014

Gearbox			GFL06
66.213	J	[kgcm²]	0.292
72.000	J	[kgcm²]	0.264
81.111	J	[kgcm²]	0.259
88.200	J	[kgcm²]	0.190
99.361	J	[kgcm²]	0.187
116.571	J	[kgcm²]	0.091
131.323	J	[kgcm²]	0.208
144.320	J	[kgcm²]	0.110
162.583	J	[kgcm²]	0.109
179.520	J	[kgcm²]	0.102
202.237	J	[kgcm²]	0.101
231.200	J	[kgcm²]	0.068
260.457	J	[kgcm²]	0.067
293.018	J	[kgcm²]	0.044
299.200	J	[kgcm²]	0.064
367.200	J	[kgcm²]	0.030
413.667	J	[kgcm²]	0.030
475.200	J	[kgcm²]	0.029
535.333	J	[kgcm²]	0.028
576.720	J	[kgcm²]	0.028
649.700	J	[kgcm²]	0.028
759.806	J	[kgcm²]	0.017
855.954	J	[kgcm²]	0.017

Gearbox			GFL07
65.306	J	[kgcm²]	0.790
72.452	J	[kgcm²]	0.894
81.636	J	[kgcm²]	0.880
92.413	J	[kgcm²]	0.609
104.127	J	[kgcm²]	0.601
113.206	J	[kgcm²]	0.448
127.556	J	[kgcm²]	0.442
147.347	J	[kgcm²]	0.275
166.025	J	[kgcm²]	0.271
183.285	J	[kgcm²]	0.194
206.519	J	[kgcm²]	0.192
224.636	J	[kgcm²]	0.180
253.111	J	[kgcm²]	0.179
290.706	J	[kgcm²]	0.112
327.556	J	[kgcm²]	0.111
352.811	J	[kgcm²]	0.081
397.533	J	[kgcm²]	0.080
430.222	J	[kgcm²]	0.104
522.133	J	[kgcm²]	0.075
562.391	J	[kgcm²]	0.073
633.680	J	[kgcm²]	0.073
718.786	J	[kgcm²]	0.047
809.900	J	[kgcm²]	0.046

Gearbox			GFL09
63.326	J	[kgcm²]	2.344
73.173	J	[kgcm²]	2.472
82.465	J	[kgcm²]	2.428
93.333	J	[kgcm²]	1.679
105.185	J	[kgcm²]	1.651
114.333	J	[kgcm²]	1.230
128.852	J	[kgcm²]	1.212
148.815	J	[kgcm²]	0.773
167.712	J	[kgcm²]	0.762
185.111	J	[kgcm²]	0.548
208.617	J	[kgcm²]	0.541
224.778	J	[kgcm²]	0.505
253.321	J	[kgcm²]	0.500
290.889	J	[kgcm²]	0.313
327.827	J	[kgcm²]	0.310
353.033	J	[kgcm²]	0.226
397.863	J	[kgcm²]	0.224
424.247	J	[kgcm²]	0.286
514.881	J	[kgcm²]	0.208
554.470	J	[kgcm²]	0.201
624.879	J	[kgcm²]	0.200
700.875	J	[kgcm²]	0.130
789.875	J	[kgcm²]	0.129

► The moments of inertia relate to the drive shaft of the gearbox.
► The total moment of inertia is calculated by adding the values of the gearbox, motor and accessories.

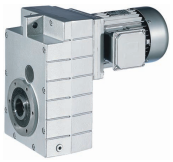

Moments of inertia

GFL□□-3

► Moment of inertia (J) depending on ratio i

Gearbox			GFL11
65.306	J	[kgcm²]	6.967
73.335	J	[kgcm²]	7.844
82.631	J	[kgcm²]	7.707
93.540	J	[kgcm²]	5.050
105.397	J	[kgcm²]	4.965
114.586	J	[kgcm²]	3.712
129.111	J	[kgcm²]	3.656
149.144	J	[kgcm²]	2.299
168.049	J	[kgcm²]	2.265
182.792	J	[kgcm²]	1.661
205.963	J	[kgcm²]	1.639
224.636	J	[kgcm²]	1.515
253.111	J	[kgcm²]	1.501
267.259	J	[kgcm²]	1.865
327.556	J	[kgcm²]	1.373
358.077	J	[kgcm²]	0.679
403.467	J	[kgcm²]	0.673
430.222	J	[kgcm²]	0.853
522.133	J	[kgcm²]	0.623
562.391	J	[kgcm²]	0.599
633.680	J	[kgcm²]	0.596
710.888	J	[kgcm²]	0.385
801.000	J	[kgcm²]	0.384

Gearbox			GFL14
64.296	J	[kgcm²]	26.316
68.708	J	[kgcm²]	19.862
77.418	J	[kgcm²]	19.381
85.037	J	[kgcm²]	21.590
104.889	J	[kgcm²]	9.324
114.126	J	[kgcm²]	8.318
128.593	J	[kgcm²]	8.144
136.889	J	[kgcm²]	16.779
156.148	J	[kgcm²]	5.917
170.074	J	[kgcm²]	6.962
202.074	J	[kgcm²]	3.692
224.636	J	[kgcm²]	4.742
253.111	J	[kgcm²]	4.697
273.778	J	[kgcm²]	5.759
332.444	J	[kgcm²]	4.300
352.811	J	[kgcm²]	2.163
397.533	J	[kgcm²]	2.145
430.222	J	[kgcm²]	2.727
522.133	J	[kgcm²]	1.984
562.391	J	[kgcm²]	1.910
633.680	J	[kgcm²]	1.903
710.888	J	[kgcm²]	1.259
801.000	J	[kgcm²]	1.254

► The moments of inertia relate to the drive shaft of the gearbox.
► The total moment of inertia is calculated by adding the values of the gearbox, motor and accessories.

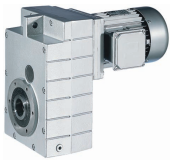

Weights, 4-pole motors

2-stage gearboxes

				m500						
				-P132L4	-P132M4	-P160L4	-P160M4	-P180L4 -P180M4	-P180V4	-P225L4 -P225M4
GFL	GFL06	m	[kg]	106	94					
	GFL07	m	[kg]	133	121	183	172			
	GFL09	m	[kg]	180	168	230	218	268	296	
	GFL11	m	[kg]	263	251	313	302	351	379	
	GFL14	m	[kg]	404	392	454	443	492	520	617

3-stage gearboxes

				m500			
				-P132L4	-P132M4	-P160L4	-P160M4
GFL	GFL09	m	[kg]		180		
	GFL11	m	[kg]	286	274		
	GFL14	m	[kg]	442	430	492	481

► Weights with oil filling for mounting position A; all values are approximate.
The weights relate to the basic version. Bear in mind that additional weights may be needed, e.g. for motor options.

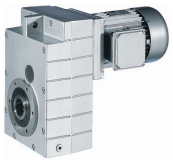

Additional weights for gearboxes

Product	Mass			
	Solid shaft	Shrink disc	Foot	Flange
	m	m	m	m
	[kg]	[kg]	[kg]	[kg]
GFL06	2.50	1.00	2.50	7.00
GFL07	5.00	1.50	4.00	11.0
GFL09	8.00	3.00	7.00	16.0
GFL11	16.0	5.00	14.0	24.0
GFL14	33.0	11.0	23.0	33.0

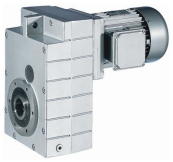

Selection tables, 4-pole motors

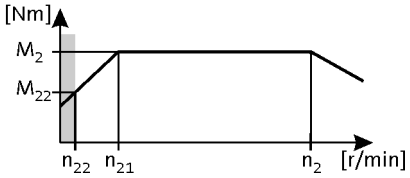

50 Hz: P_N = 5.5 kW
87 Hz: P_N = 9.6 kW

2-stage gearboxes

Mains operation 400 V, 50 Hz			Inverter operation 5 Hz -		- 20 Hz		- 50 Hz (1:10)			- 87 Hz (1:17.4)			i	Product		
n_2 [r/min]	M_2 [Nm]	c	n_{22} [r/min]	M_{22} [Nm]	n_{21} [r/min]	M_2 [Nm]	n_2 [r/min]	M_2 [Nm]	c	n_2 [r/min]	M_2 [Nm]	c		GFL	m500	
397	128	2.7	40	80	163	128	397	128	2.7	687	129	2.2	3.675	GFL06	-P132M4	48
314	162	4.0	31	101	129	162	314	162	4.0				4.643	GFL07	-P132M4	52
280	182	2.3	28	113	115	182	280	182	2.3				5.211	GFL06	-P132M4	48
254	201	2.2	25	125	104	201	254	201	2.2				5.750	GFL06	-P132M4	48
228	224	3.0	23	139	94	224	228	224	3.0				6.400	GFL07	-P132M4	52
226	225	1.6	23	140	93	225	226	225	1.6				6.450	GFL06	-P132M4	48
204	250	1.7	20	155	84	250	204	250	1.7				7.147	GFL06	-P132M4	48
174	293	2.1	17	182	71	293	174	293	2.1				8.400	GFL06	-P132M4	48
156	328	3.1	16	203	64	328	156	328	3.1				9.379	GFL07	-P132M4	52
154	331	1.8	15	205	63	331	154	331	1.8				9.463	GFL06	-P132M4	48
150	339	2.9	15	210	62	339	150	339	2.9				9.714	GFL07	-P132M4	52
145	352	1.3	14	219	60	352	145	352	1.3				10.092	GFL06	-P132M4	48
127	402	1.6	13	249	52	402	127	402	1.6				11.520	GFL06	-P132M4	48
127	403	2.7	13	250	52	403	127	403	2.7				11.538	GFL07	-P132M4	52
112	453	1.3	11	281	46	453	112	453	1.3				12.978	GFL06	-P132M4	48
112	454	2.4	11	281	46	454	112	454	2.4				13.000	GFL07	-P132M4	52
103	496	2.3	10	307	42	496	103	496	2.3				14.200	GFL07	-P132M4	52
99	515	1.2	9.8	319	41	515	99	515	1.2				14.743	GFL06	-P132M4	48
92	555	2.1	9.1	344	38	555	92	555	2.1				15.904	GFL07	-P132M4	52
91	563	1.1	9.0	349	37	563	91	563	1.1				16.128	GFL06	-P132M4	48
81	626	1.9	8.1	388	34	626	81	626	1.9				17.920	GFL07	-P132M4	52
80	635	0.9	8.0	393	33	635	80	635	0.9				18.169	GFL06	-P132M4	48
72	709	1.8	7.1	439	30	709	72	709	1.8				20.286	GFL07	-P132M4	52
71	718	0.9	7.0	445	29	718	71	718	0.9				20.571	GFL06	-P132M4	48
64	798	1.6	6.3	495	26	798	64	798	1.6				22.857	GFL07	-P132M4	52
61	842	3.2	6.0	522	25	842	61	842	3.2				24.111	GFL09	-P132M4	56
59	868	1.5	5.8	538	24	868	59	868	1.5				24.850	GFL07	-P132M4	52
54	949	2.9	5.3	588	22	949	54	949	2.9				27.173	GFL09	-P132M4	56
52	978	1.3	5.2	606	21	978	52	978	1.3				28.000	GFL07	-P132M4	52
45	1130	1.2	4.5	700	19	1130	45	1130	1.2				32.344	GFL07	-P132M4	52
45	1141	2.6	4.4	707	18	1141	45	1141	2.6				32.667	GFL09	-P132M4	56
40	1273	1.0	4.0	789	17	1273	40	1273	1.0				36.444	GFL07	-P132M4	52
40	1286	2.4	3.9	797	16	1286	40	1286	2.4				36.815	GFL09	-P132M4	56
37	1385	2.2	3.7	859	15	1385	37	1385	2.2				39.667	GFL09	-P132M4	56
33	1561	1.9	3.2	968	13	1561	33	1561	1.9				44.704	GFL09	-P132M4	56

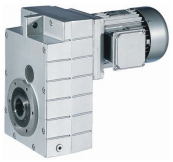

Selection tables, 4-pole motors

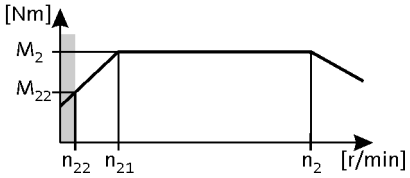

50 Hz: P_N = 5.5 kW
87 Hz: P_N = 9.6 kW

2-stage gearboxes

Mains operation 400 V, 50 Hz			Inverter operation 5 Hz -		- 20 Hz		- 50 Hz (1:10)			- 87 Hz (1:17.4)			i	Product		
n_2 [r/min]	M_2 [Nm]	c	n_{22} [r/min]	M_{22} [Nm]	n_{21} [r/min]	M_2 [Nm]	n_2 [r/min]	M_2 [Nm]	c	n_2 [r/min]	M_2 [Nm]	c		GFL	m500	
32	1583	3.1	3.2	981	13	1583	32	1583	3.1				45.333	GFL11	-P132M4	64
28	1818	2.9	2.8	1127	12	1818	28	1818	2.9				52.067	GFL11	-P132M4	64
25	2049	2.6	2.5	1270	10	2049	25	2049	2.6				58.667	GFL11	-P132M4	64
23	2207	2.5	2.3	1368	9.5	2207	23	2207	2.5				63.190	GFL11	-P132M4	64
21	2487	2.2	2.0	1541	8.4	2487	21	2487	2.2				71.200	GFL11	-P132M4	64
18	2790	2.5	1.8	1729	7.5	2790	18	2790	2.5				79.875	GFL14	-P132M4	72
16	3143	2.5	1.6	1948	6.7	3143	16	3143	2.5				90.000	GFL14	-P132M4	72

3-stage gearboxes

Mains operation 400 V, 50 Hz			Inverter operation 5 Hz -		- 20 Hz		- 50 Hz (1:10)			- 87 Hz (1:17.4)			i	Product		
n_2 [r/min]	M_2 [Nm]	c	n_{22} [r/min]	M_{22} [Nm]	n_{21} [r/min]	M_2 [Nm]	n_2 [r/min]	M_2 [Nm]	c	n_2 [r/min]	M_2 [Nm]	c		GFL	m500	
23	2212	2.5	2.3	1371	9.3	2212	23	2212	2.5				64.296	GFL14	-P132M4	76
22	2247	1.3	2.2	1393	9.2	2247	22	2247	1.3				65.306	GFL11	-P132M4	68
21	2364	2.3	2.1	1465	8.7	2364	21	2364	2.3				68.708	GFL14	-P132M4	76
20	2523	1.1	2.0	1564	8.2	2523	20	2523	1.1				73.335	GFL11	-P132M4	68
19	2663	2.3	1.9	1651	7.8	2663	19	2663	2.3				77.418	GFL14	-P132M4	76
18	2843	1.1	1.8	1762	7.3	2843	18	2843	1.1				82.631	GFL11	-P132M4	68
17	2925	2.2	1.7	1813	7.1	2925	17	2925	2.2				85.037	GFL14	-P132M4	76
16	3218	1.0	1.6	1995	6.4	3218	16	3218	1.0				93.540	GFL11	-P132M4	68
14	3608	1.9	1.4	2237	5.7	3608	14	3608	1.9				104.889	GFL14	-P132M4	76
14	3626	1.0	1.4	2247	5.7	3626	14	3626	1.0				105.397	GFL11	-P132M4	68
13	3926	1.7	1.3	2434	5.3	3926	13	3926	1.7				114.126	GFL14	-P132M4	76
13	3942	0.9	1.3	2443	5.2	3942	13	3942	0.9				114.586	GFL11	-P132M4	68
11	4424	1.7	1.1	2742	4.7	4424	11	4424	1.7				128.593	GFL14	-P132M4	76
11	4442	0.9	1.1	2753	4.6	4442	11	4442	0.9				129.111	GFL11	-P132M4	68
11	4709	1.6	1.1	2919	4.4	4709	11	4709	1.6				136.889	GFL14	-P132M4	76
9.3	5372	1.5	0.9	3330	3.8	5372	9.3	5372	1.5				156.148	GFL14	-P132M4	76
8.6	5851	1.4	0.9	3627	3.5	5851	8.6	5851	1.4				170.074	GFL14	-P132M4	76
6.5	7728	1.1	0.6	4790	2.7	7728	6.5	7728	1.1				224.636	GFL14	-P132M4	76
5.8	8708	1.1	0.6	5397	2.4	8708	5.8	8708	1.1				253.111	GFL14	-P132M4	76
5.3	9419	1.0	0.5	5838	2.2	9419	5.3	9419	1.0				273.778	GFL14	-P132M4	76
4.4	11437	0.9	0.4	7089	1.8	11437	4.4	11437	0.9				332.444	GFL14	-P132M4	76

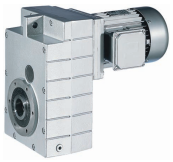

Selection tables, 4-pole motors

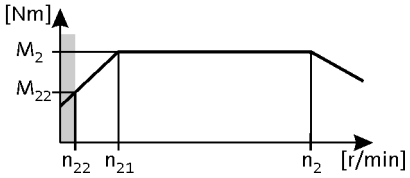

50 Hz: P_N = 7.5 kW
87 Hz: P_N = 13.1 kW

2-stage gearboxes

Mains operation 400 V, 50 Hz			Inverter operation 5 Hz -		- 20 Hz		- 50 Hz (1:10)			- 87 Hz (1:17.4)			i	Product		
n_2 [r/min]	M_2 [Nm]	c	n_{22} [r/min]	M_{22} [Nm]	n_{21} [r/min]	M_2 [Nm]	n_2 [r/min]	M_2 [Nm]	c	n_2 [r/min]	M_2 [Nm]	c		GFL	m500	
397	175	1.9	40	109	163	175	397	175	1.9				3.675	GFL06	-P132L4	48
314	221	3.0	31	138	129	221	314	221	3.0				4.643	GFL07	-P132L4	52
280	248	1.7	28	155	115	248	280	248	1.7				5.211	GFL06	-P132L4	48
254	274	1.6	25	171	104	274	254	274	1.6				5.750	GFL06	-P132L4	48
228	305	2.2	23	191	94	305	228	305	2.2				6.400	GFL07	-P132L4	52
226	307	1.1	23	192	93	307	226	307	1.1				6.450	GFL06	-P132L4	48
204	341	1.3	20	213	84	341	204	341	1.3				7.147	GFL06	-P132L4	48
204	341	2.7	20	213	84	341	204	341	2.7				7.150	GFL07	-P132L4	52
175	397	2.5	17	248	72	397	175	397	2.5				8.324	GFL07	-P132L4	52
174	400	1.5	17	250	71	400	174	400	1.5				8.400	GFL06	-P132L4	48
155	447	2.2	16	279	64	447	155	447	2.2				9.379	GFL07	-P132L4	52
154	451	1.3	15	282	63	451	154	451	1.3				9.463	GFL06	-P132L4	48
150	463	2.1	15	289	62	463	150	463	2.1				9.714	GFL07	-P132L4	52
145	481	1.0	14	301	60	481	145	481	1.0				10.092	GFL06	-P132L4	48
127	549	1.2	13	343	52	549	127	549	1.2				11.520	GFL06	-P132L4	48
126	550	2.0	13	344	52	550	126	550	2.0				11.538	GFL07	-P132L4	52
112	619	1.0	11	386	46	619	112	619	1.0				12.978	GFL06	-P132L4	48
112	620	1.8	11	387	46	620	112	620	1.8				13.000	GFL07	-P132L4	52
103	677	1.7	10	423	42	677	103	677	1.7				14.200	GFL07	-P132L4	52
99	703	0.9	9.8	439	41	703	99	703	0.9				14.743	GFL06	-P132L4	48
92	758	1.6	9.1	474	38	758	92	758	1.6				15.904	GFL07	-P132L4	52
90	769	0.8	9.0	480	37	769	90	769	0.8				16.128	GFL06	-P132L4	48
89	778	3.2	8.9	486	37	778	89	778	3.2				16.333	GFL09	-P132L4	56
81	854	1.4	8.1	534	34	854	81	854	1.4				17.920	GFL07	-P132L4	52
79	877	2.8	7.9	548	33	877	79	877	2.8				18.407	GFL09	-P132L4	56
74	937	2.7	7.4	586	31	937	74	937	2.7				19.667	GFL09	-P132L4	56
72	967	1.3	7.1	604	30	967	72	967	1.3				20.286	GFL07	-P132L4	52
66	1056	2.5	6.5	660	27	1056	66	1056	2.5				22.164	GFL09	-P132L4	56
64	1089	1.1	6.3	681	26	1089	64	1089	1.1				22.857	GFL07	-P132L4	52
61	1149	2.4	6.0	718	25	1149	61	1149	2.4				24.111	GFL09	-P132L4	56
59	1184	1.1	5.8	740	24	1184	59	1184	1.1				24.850	GFL07	-P132L4	52
54	1295	2.1	5.3	809	22	1295	54	1295	2.1				27.173	GFL09	-P132L4	56
52	1334	0.9	5.2	834	21	1334	52	1334	0.9				28.000	GFL07	-P132L4	52
52	1334	3.2	5.2	834	21	1334	52	1334	3.2				28.000	GFL11	-P132L4	64
45	1542	0.9	4.5	963	19	1542	45	1542	0.9				32.344	GFL07	-P132L4	52

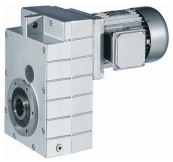

Selection tables, 4-pole motors

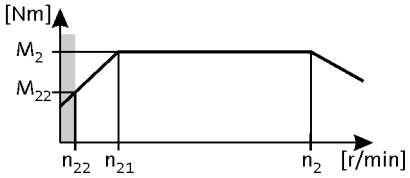

50 Hz: P_N = 7.5 kW
87 Hz: P_N = 13.1 kW

2-stage gearboxes

Mains operation 400 V, 50 Hz			Inverter operation 5 Hz -		- 20 Hz		- 50 Hz (1:10)			- 87 Hz (1:17.4)			i	Product		
n_2 [r/min]	M_2 [Nm]	c	n_{22} [r/min]	M_{22} [Nm]	n_{21} [r/min]	M_2 [Nm]	n_2 [r/min]	M_2 [Nm]	c	n_2 [r/min]	M_2 [Nm]	c		GFL	m500	
45	1557	1.9	4.4	973	18	1557	45	1557	1.9				32.667	GFL09	-P132L4	56
45	1560	3.0	4.4	975	18	1560	45	1560	3.0				32.739	GFL11	-P132L4	64
40	1755	1.7	3.9	1096	16	1755	40	1755	1.7				36.815	GFL09	-P132L4	56
40	1758	2.6	3.9	1098	16	1758	40	1758	2.6				36.889	GFL11	-P132L4	64
37	1890	1.6	3.7	1181	15	1890	37	1890	1.6				39.667	GFL09	-P132L4	56
36	1917	2.6	3.6	1198	15	1917	36	1917	2.6				40.233	GFL11	-P132L4	64
33	2131	1.4	3.2	1331	13	2131	33	2131	1.4				44.704	GFL09	-P132L4	56
32	2161	2.3	3.2	1350	13	2161	32	2161	2.3				45.333	GFL11	-P132L4	64
28	2481	3.1	2.8	1550	12	2481	28	2481	3.1				52.067	GFL14	-P132L4	72
28	2481	2.1	2.8	1550	12	2481	28	2481	2.1				52.067	GFL11	-P132L4	64
25	2796	3.1	2.5	1747	10	2796	25	2796	3.1				58.667	GFL14	-P132L4	72
25	2796	1.9	2.5	1747	10	2796	25	2796	1.9				58.667	GFL11	-P132L4	64
23	3012	2.6	2.3	1881	9.5	3012	23	3012	2.6				63.190	GFL14	-P132L4	72
21	3393	2.6	2.0	2120	8.4	3393	21	3393	2.6				71.200	GFL14	-P132L4	72

3-stage gearboxes

Mains operation 400 V, 50 Hz			Inverter operation 5 Hz -		- 20 Hz		- 50 Hz (1:10)			- 87 Hz (1:17.4)			i	Product		
n_2 [r/min]	M_2 [Nm]	c	n_{22} [r/min]	M_{22} [Nm]	n_{21} [r/min]	M_2 [Nm]	n_2 [r/min]	M_2 [Nm]	c	n_2 [r/min]	M_2 [Nm]	c		GFL	m500	
23	3018	1.9	2.3	1886	9.3	3018	23	3018	1.9				64.296	GFL14	-P132L4	76
22	3066	0.9	2.2	1915	9.2	3066	22	3066	0.9				65.306	GFL11	-P132L4	68
21	3225	1.7	2.1	2015	8.7	3225	21	3225	1.7				68.708	GFL14	-P132L4	76
20	3443	0.8	2.0	2151	8.2	3443	20	3443	0.8				73.335	GFL11	-P132L4	68
19	3634	1.7	1.9	2271	7.8	3634	19	3634	1.7				77.418	GFL14	-P132L4	76
18	3879	0.8	1.8	2423	7.3	3879	18	3879	0.8				82.631	GFL11	-P132L4	68
17	3992	1.6	1.7	2494	7.1	3992	17	3992	1.6				85.037	GFL14	-P132L4	76
14	4924	1.4	1.4	3076	5.7	4924	14	4924	1.4				104.889	GFL14	-P132L4	76
13	5358	1.3	1.3	3347	5.3	5358	13	5358	1.3				114.126	GFL14	-P132L4	76
11	6037	1.3	1.1	3771	4.7	6037	11	6037	1.3				128.593	GFL14	-P132L4	76
11	6426	1.2	1.1	4015	4.4	6426	11	6426	1.2				136.889	GFL14	-P132L4	76
9.3	7330	1.1	0.9	4579	3.8	7330	9.3	7330	1.1				156.148	GFL14	-P132L4	76
8.6	7984	1.1	0.9	4988	3.5	7984	8.6	7984	1.1				170.074	GFL14	-P132L4	76
6.5	10545	0.8	0.6	6588	2.7	10545	6.5	10545	0.8				224.636	GFL14	-P132L4	76
5.8	11882	0.8	0.6	7423	2.4	11882	5.8	11882	0.8				253.111	GFL14	-P132L4	76

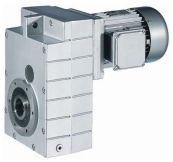

Selection tables, 4-pole motors

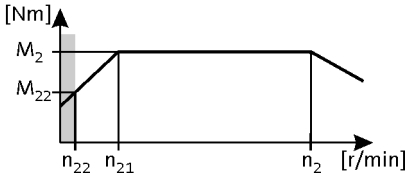

50 Hz: P_N = 11.0 kW
87 Hz: P_N = 19.2 kW

2-stage gearboxes

Mains operation 400 V, 50 Hz			Inverter operation 5 Hz -		- 20 Hz		- 50 Hz (1:10)			- 87 Hz (1:17.4)			i	Product		
n_2 [r/min]	M_2 [Nm]	c	n_{22} [r/min]	M_{22} [Nm]	n_{21} [r/min]	M_2 [Nm]	n_2 [r/min]	M_2 [Nm]	c	n_2 [r/min]	M_2 [Nm]	c		GFL	m500	
440	232	2.8	43	128	179	232	440	232	2.8				3.350	GFL07	-P160M4	52
317	321	2.0	31	177	129	321	317	321	2.0				4.643	GFL07	-P160M4	52
286	357	2.4	28	197	116	357	286	357	2.4				5.159	GFL07	-P160M4	52
259	394	2.3	26	217	105	394	259	394	2.3				5.695	GFL07	-P160M4	52
230	443	1.5	23	244	94	443	230	443	1.5				6.400	GFL07	-P160M4	52
206	495	1.9	20	273	84	495	206	495	1.9				7.150	GFL07	-P160M4	52
177	576	1.7	17	318	72	576	177	576	1.7				8.324	GFL07	-P160M4	52
157	649	1.5	16	358	64	649	157	649	1.5				9.379	GFL07	-P160M4	52
152	672	1.4	15	371	62	672	152	672	1.4				9.714	GFL07	-P160M4	52
132	773	3.0	13	426	54	773	132	773	3.0				11.167	GFL09	-P160M4	56
128	798	1.4	13	440	52	798	128	798	1.4				11.538	GFL07	-P160M4	52
120	851	2.6	12	470	49	851	120	851	2.6				12.307	GFL09	-P160M4	56
113	899	1.2	11	496	46	899	113	899	1.2				13.000	GFL07	-P160M4	52
104	982	1.2	10	542	42	982	104	982	1.2				14.200	GFL07	-P160M4	52
103	992	2.4	10	547	42	992	103	992	2.4				14.333	GFL09	-P160M4	56
93	1100	1.1	9.1	607	38	1100	93	1100	1.1				15.904	GFL07	-P160M4	52
90	1130	2.2	8.9	623	37	1130	90	1130	2.2				16.333	GFL09	-P160M4	56
82	1240	3.1	8.1	684	34	1240	82	1240	3.1				17.920	GFL11	-P160M4	64
82	1240	1.0	8.1	684	34	1240	82	1240	1.0				17.920	GFL07	-P160M4	52
80	1274	2.0	7.9	702	33	1274	80	1274	2.0				18.407	GFL09	-P160M4	56
75	1361	1.9	7.4	750	31	1361	75	1361	1.9				19.667	GFL09	-P160M4	56
73	1404	2.9	7.1	774	30	1404	73	1404	2.9				20.286	GFL11	-P160M4	64
67	1533	1.7	6.5	846	27	1533	67	1533	1.7				22.164	GFL09	-P160M4	56
64	1581	2.6	6.3	872	26	1581	64	1581	2.6				22.857	GFL11	-P160M4	64
61	1668	1.6	6.0	920	25	1668	61	1668	1.6				24.111	GFL09	-P160M4	56
59	1719	2.5	5.8	948	24	1719	59	1719	2.5				24.850	GFL11	-P160M4	64
54	1880	1.5	5.3	1037	22	1880	54	1880	1.5				27.173	GFL09	-P160M4	56
53	1937	2.2	5.2	1068	21	1937	53	1937	2.2				28.000	GFL11	-P160M4	64
45	2265	2.0	4.4	1249	18	2265	45	2265	2.0				32.739	GFL11	-P160M4	64
40	2552	1.8	3.9	1408	16	2552	40	2552	1.8				36.889	GFL11	-P160M4	64
37	2784	1.8	3.6	1535	15	2784	37	2784	1.8				40.233	GFL11	-P160M4	64
33	3137	1.6	3.2	1730	13	3137	33	3137	1.6				45.333	GFL11	-P160M4	64
28	3602	2.8	2.8	1987	12	3602	28	3602	2.8				52.067	GFL14	-P160M4	72
25	4059	2.8	2.5	2238	10	4059	25	4059	2.8				58.667	GFL14	-P160M4	72
23	4372	2.3	2.3	2411	9.5	4372	23	4372	2.3				63.190	GFL14	-P160M4	72

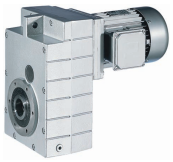

Selection tables, 4-pole motors

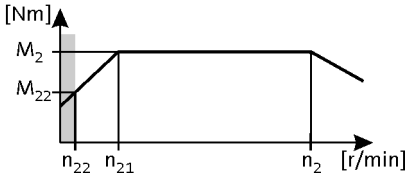

50 Hz: P_N = 11.0 kW
87 Hz: P_N = 19.2 kW

2-stage gearboxes

Mains operation 400 V, 50 Hz			Inverter operation 5 Hz -		- 20 Hz		- 50 Hz (1:10)			- 87 Hz (1:17.4)			i	Product GFL	m500	
n_2 [r/min]	M_2 [Nm]	c	n_{22} [r/min]	M_{22} [Nm]	n_{21} [r/min]	M_2 [Nm]	n_2 [r/min]	M_2 [Nm]	c	n_2 [r/min]	M_2 [Nm]	c				
21	4926	2.2	2.0	2717	8.4	4926	21	4926	2.2				71.200	GFL14	-P160M4	72

3-stage gearboxes

Mains operation 400 V, 50 Hz			Inverter operation 5 Hz -		- 20 Hz		- 50 Hz (1:10)			- 87 Hz (1:17.4)			i	Product GFL	m500	
n_2 [r/min]	M_2 [Nm]	c	n_{22} [r/min]	M_{22} [Nm]	n_{21} [r/min]	M_2 [Nm]	n_2 [r/min]	M_2 [Nm]	c	n_2 [r/min]	M_2 [Nm]	c				
23	4382	1.3	2.3	2416	9.3	4382	23	4382	1.3				64.296	GFL14	-P160M4	76
21	4683	1.2	2.1	2582	8.7	4683	21	4683	1.2				68.708	GFL14	-P160M4	76
19	5276	1.2	1.9	2910	7.8	5276	19	5276	1.2				77.418	GFL14	-P160M4	76
17	5795	1.1	1.7	3196	7.1	5795	17	5795	1.1				85.037	GFL14	-P160M4	76

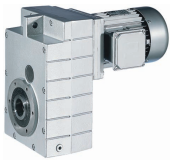

Selection tables, 4-pole motors

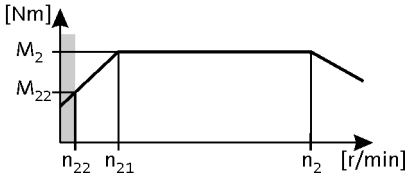

50 Hz: P_N = 15.0 kW
87 Hz: P_N = 26.2 kW

2-stage gearboxes

Mains operation 400 V, 50 Hz			Inverter operation 5 Hz -		- 20 Hz		- 50 Hz (1:10)			- 87 Hz (1:17.4)			i	Product		
n_2 [r/min]	M_2 [Nm]	c	n_{22} [r/min]	M_{22} [Nm]	n_{21} [r/min]	M_2 [Nm]	n_2 [r/min]	M_2 [Nm]	c	n_2 [r/min]	M_2 [Nm]	c		GFL	m500	
440	316	2.0	43	174	179	316	440	316	2.0				3.350	GFL07	-P160L4	52
318	437	1.5	31	241	129	437	318	437	1.5				4.643	GFL07	-P160L4	52
286	486	1.8	28	268	116	486	286	486	1.8				5.159	GFL07	-P160L4	52
259	537	1.7	26	296	105	537	259	537	1.7				5.695	GFL07	-P160L4	52
231	603	1.1	23	333	94	603	231	603	1.1				6.400	GFL07	-P160L4	52
215	647	3.2	21	357	87	647	215	647	3.2				6.864	GFL09	-P160L4	56
206	674	1.4	20	372	84	674	206	674	1.4				7.150	GFL07	-P160L4	52
198	703	3.1	19	388	80	703	198	703	3.1				7.466	GFL09	-P160L4	56
164	849	2.6	16	468	67	849	164	849	2.6				9.010	GFL09	-P160L4	56
152	915	1.1	15	505	62	915	152	915	1.1				9.714	GFL07	-P160L4	52
151	923	2.5	15	509	61	923	151	923	2.5				9.799	GFL09	-P160L4	56
132	1052	2.2	13	580	54	1052	132	1052	2.2				11.167	GFL09	-P160L4	56
120	1160	1.9	12	640	49	1160	120	1160	1.9				12.307	GFL09	-P160L4	56
118	1176	3.0	12	649	48	1176	118	1176	3.0				12.480	GFL11	-P160L4	64
103	1350	1.8	10	745	42	1350	103	1350	1.8				14.333	GFL09	-P160L4	56
102	1370	2.7	10	756	41	1370	102	1370	2.7				14.538	GFL11	-P160L4	64
93	1498	2.5	9.1	827	38	1498	93	1498	2.5				15.904	GFL11	-P160L4	64
90	1539	1.6	8.9	849	37	1539	90	1539	1.6				16.333	GFL09	-P160L4	56
82	1688	2.2	8.1	931	34	1688	82	1688	2.2				17.920	GFL11	-P160L4	64
80	1734	1.4	7.9	957	33	1734	80	1734	1.4				18.407	GFL09	-P160L4	56
75	1853	1.4	7.4	1022	31	1853	75	1853	1.4				19.667	GFL09	-P160L4	56
73	1911	2.1	7.1	1054	30	1911	73	1911	2.1				20.286	GFL11	-P160L4	64
67	2088	1.3	6.5	1152	27	2088	67	2088	1.3				22.164	GFL09	-P160L4	56
65	2154	1.9	6.3	1188	26	2154	65	2154	1.9				22.857	GFL11	-P160L4	64
61	2272	1.2	6.0	1253	25	2272	61	2272	1.2				24.111	GFL09	-P160L4	56
59	2341	1.8	5.8	1292	24	2341	59	2341	1.8				24.850	GFL11	-P160L4	64
54	2560	1.1	5.3	1412	22	2560	54	2560	1.1				27.173	GFL09	-P160L4	56
53	2638	1.6	5.2	1455	21	2638	53	2638	1.6				28.000	GFL11	-P160L4	64
46	3047	3.1	4.5	1681	19	3047	46	3047	3.1				32.344	GFL14	-P160L4	72
45	3085	1.5	4.4	1702	18	3085	45	3085	1.5				32.739	GFL11	-P160L4	64
41	3434	3.1	4.0	1894	17	3434	41	3434	3.1				36.444	GFL14	-P160L4	72
40	3476	1.3	3.9	1917	16	3476	40	3476	1.3				36.889	GFL11	-P160L4	64
37	3735	2.6	3.7	2060	15	3735	37	3735	2.6				39.642	GFL14	-P160L4	72
37	3791	1.3	3.6	2091	15	3791	37	3791	1.3				40.233	GFL11	-P160L4	64
33	4208	2.6	3.2	2322	13	4208	33	4208	2.6				44.667	GFL14	-P160L4	72

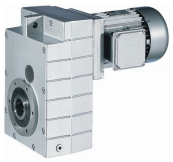

Selection tables, 4-pole motors

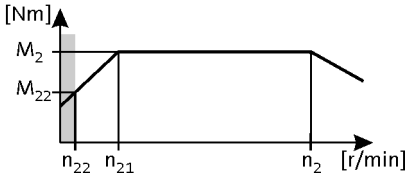

50 Hz: P_N = 15.0 kW
87 Hz: P_N = 26.2 kW

2-stage gearboxes

Mains operation 400 V, 50 Hz			Inverter operation 5 Hz -		- 20 Hz		- 50 Hz (1:10)			- 87 Hz (1:17.4)			i	Product		
n_2 [r/min]	M_2 [Nm]	c	n_{22} [r/min]	M_{22} [Nm]	n_{21} [r/min]	M_2 [Nm]	n_2 [r/min]	M_2 [Nm]	c	n_2 [r/min]	M_2 [Nm]	c		GFL	m500	
33	4271	1.1	3.2	2356	13	4271	33	4271	1.1				45.333	GFL11	-P160L4	64
28	4906	2.1	2.8	2706	12	4906	28	4906	2.1				52.067	GFL14	-P160L4	72
25	5528	2.0	2.5	3049	10	5528	25	5528	2.0				58.667	GFL14	-P160L4	72
23	5954	1.7	2.3	3284	9.5	5954	23	5954	1.7				63.190	GFL14	-P160L4	72
21	6708	1.6	2.0	3701	8.4	6708	21	6708	1.6				71.200	GFL14	-P160L4	72

3-stage gearboxes

Mains operation 400 V, 50 Hz			Inverter operation 5 Hz -		- 20 Hz		- 50 Hz (1:10)			- 87 Hz (1:17.4)			i	Product		
n_2 [r/min]	M_2 [Nm]	c	n_{22} [r/min]	M_{22} [Nm]	n_{21} [r/min]	M_2 [Nm]	n_2 [r/min]	M_2 [Nm]	c	n_2 [r/min]	M_2 [Nm]	c		GFL	m500	
23	5967	0.9	2.3	3292	9.3	5967	23	5967	0.9				64.296	GFL14	-P160L4	76
22	6377	0.9	2.1	3518	8.7	6377	22	6377	0.9				68.708	GFL14	-P160L4	76
19	7185	0.9	1.9	3963	7.8	7185	19	7185	0.9				77.418	GFL14	-P160L4	76

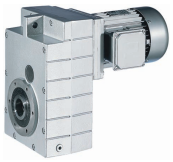

Selection tables, 4-pole motors

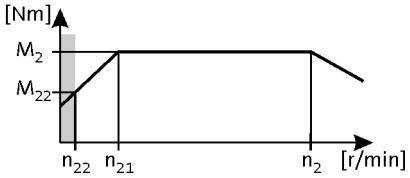

50 Hz: P_N = 18.5 kW
87 Hz: P_N = 32.5 kW

2-stage gearboxes

Mains operation 400 V, 50 Hz			Inverter operation 5 Hz -		- 20 Hz		- 50 Hz (1:10)			- 87 Hz (1:17.4)			i	Product		
n_2 [r/min]	M_2 [Nm]	c	n_{22} [r/min]	M_{22} [Nm]	n_{21} [r/min]	M_2 [Nm]	n_2 [r/min]	M_2 [Nm]	c	n_2 [r/min]	M_2 [Nm]	c		GFL	m500	
215	798	2.6	21	439	87	798	215	798	2.6				6.864	GFL09	-P180M4	56
197	868	2.5	19	477	80	868	197	868	2.5				7.466	GFL09	-P180M4	56
164	1048	2.1	16	576	67	1048	164	1048	2.1				9.010	GFL09	-P180M4	56
150	1139	2.0	15	627	61	1139	150	1139	2.0				9.799	GFL09	-P180M4	56
138	1247	3.1	14	685	56	1247	138	1247	3.1				10.720	GFL11	-P180M4	64
132	1298	1.8	13	714	54	1298	132	1298	1.8				11.167	GFL09	-P180M4	56
103	1667	1.4	10	916	42	1667	103	1667	1.4				14.333	GFL09	-P180M4	56
101	1691	2.2	10	929	41	1691	101	1691	2.2				14.538	GFL11	-P180M4	64
93	1849	2.1	9.1	1017	38	1849	93	1849	2.1				15.904	GFL11	-P180M4	64
90	1899	1.3	8.9	1044	37	1899	90	1899	1.3				16.333	GFL09	-P180M4	56
82	2084	1.8	8.1	1146	34	2084	82	2084	1.8				17.920	GFL11	-P180M4	64
80	2140	1.2	7.9	1177	33	2140	80	2140	1.2				18.407	GFL09	-P180M4	56
75	2287	1.1	7.4	1257	31	2287	75	2287	1.1				19.667	GFL09	-P180M4	56
73	2359	1.7	7.1	1297	30	2359	73	2359	1.7				20.286	GFL11	-P180M4	64
67	2577	1.0	6.5	1417	27	2577	67	2577	1.0				22.164	GFL09	-P180M4	56
65	2658	1.5	6.3	1461	26	2658	65	2658	1.5				22.857	GFL11	-P180M4	64
61	2804	1.0	6.0	1541	25	2804	61	2804	1.0				24.111	GFL09	-P180M4	56
60	2844	3.1	5.9	1563	25	2844	60	2844	3.1				24.456	GFL14	-P180M4	72
59	2890	1.5	5.8	1589	24	2890	59	2890	1.5				24.850	GFL11	-P180M4	64
54	3160	0.9	5.3	1737	22	3160	54	3160	0.9				27.173	GFL09	-P180M4	56
54	3204	3.1	5.3	1762	22	3204	54	3204	3.1				27.556	GFL14	-P180M4	72
53	3256	1.3	5.2	1790	21	3256	53	3256	1.3				28.000	GFL11	-P180M4	64
46	3761	2.5	4.5	2068	19	3761	46	3761	2.5				32.344	GFL14	-P180M4	72
45	3807	1.2	4.4	2093	18	3807	45	3807	1.2				32.739	GFL11	-P180M4	64
40	4238	2.5	4.0	2330	17	4238	40	4238	2.5				36.444	GFL14	-P180M4	72
40	4290	1.1	3.9	2358	16	4290	40	4290	1.1				36.889	GFL11	-P180M4	64
37	4610	2.1	3.7	2534	15	4610	37	4610	2.1				39.642	GFL14	-P180M4	72
37	4678	1.0	3.6	2572	15	4678	37	4678	1.0				40.233	GFL11	-P180M4	64
33	5194	2.1	3.2	2856	13	5194	33	5194	2.1				44.667	GFL14	-P180M4	72
33	5272	0.9	3.2	2898	13	5272	33	5272	0.9				45.333	GFL11	-P180M4	64
28	6054	1.7	2.8	3329	12	6054	28	6054	1.7				52.067	GFL14	-P180M4	72
25	6822	1.7	2.5	3750	10	6822	25	6822	1.7				58.667	GFL14	-P180M4	72

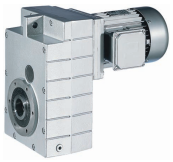

Selection tables, 4-pole motors

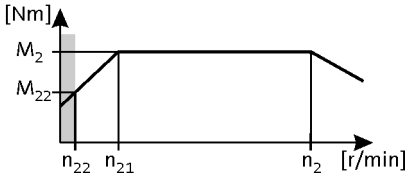

50 Hz: P_N = 22.0 kW
87 Hz: P_N = 38.1 kW

2-stage gearboxes

Mains operation 400 V, 50 Hz			Inverter operation 5 Hz -		- 20 Hz		- 50 Hz (1:10)			- 87 Hz (1:17.4)			i	Product		
n_2 [r/min]	M_2 [Nm]	c	n_{22} [r/min]	M_{22} [Nm]	n_{21} [r/min]	M_2 [Nm]	n_2 [r/min]	M_2 [Nm]	c	n_2 [r/min]	M_2 [Nm]	c		GFL	m500	
215	947	2.2	21	523	87	947	215	947	2.2				6.864	GFL09	-P180L4	56
215	947	3.1	21	523	87	947	215	947	3.1				6.864	GFL11	-P180L4	64
198	1030	2.1	19	569	80	1030	198	1030	2.1				7.466	GFL09	-P180L4	56
198	1030	3.1	19	569	80	1030	198	1030	3.1				7.466	GFL11	-P180L4	64
164	1242	1.8	16	687	67	1242	164	1242	1.8				9.010	GFL09	-P180L4	56
164	1242	2.9	16	687	67	1242	164	1242	2.9				9.010	GFL11	-P180L4	64
151	1351	1.7	15	747	61	1351	151	1351	1.7				9.799	GFL09	-P180L4	56
151	1351	2.8	15	747	61	1351	151	1351	2.8				9.799	GFL11	-P180L4	64
138	1478	2.6	14	818	56	1478	138	1478	2.6				10.720	GFL11	-P180L4	64
132	1540	1.5	13	852	54	1540	132	1540	1.5				11.167	GFL09	-P180L4	56
102	2005	1.9	10	1109	41	2005	102	2005	1.9				14.538	GFL11	-P180L4	64
95	2154	3.1	9.3	1191	38	2154	95	2154	3.1				15.620	GFL14	-P180L4	72
93	2193	1.7	9.1	1213	38	2193	93	2193	1.7				15.904	GFL11	-P180L4	64
91	2253	1.1	8.9	1246	37	2253	91	2253	1.1				16.333	GFL09	-P180L4	56
84	2427	3.1	8.2	1342	34	2427	84	2427	3.1				17.600	GFL14	-P180L4	72
75	2712	0.9	7.4	1500	31	2712	75	2712	0.9				19.667	GFL09	-P180L4	56
74	2751	2.9	7.3	1521	30	2751	74	2751	2.9				19.948	GFL14	-P180L4	72
73	2798	1.5	7.1	1547	30	2798	73	2798	1.5				20.286	GFL11	-P180L4	64
66	3100	2.9	6.5	1714	27	3100	66	3100	2.9				22.476	GFL14	-P180L4	72
61	3325	0.8	6.0	1839	25	3325	61	3325	0.8				24.111	GFL09	-P180L4	56
60	3373	2.6	5.9	1865	25	3373	60	3373	2.6				24.456	GFL14	-P180L4	72
60	3427	1.3	5.8	1895	24	3427	60	3427	1.3				24.850	GFL11	-P180L4	64
54	3800	2.6	5.3	2101	22	3800	54	3800	2.6				27.556	GFL14	-P180L4	72
53	3861	1.1	5.2	2135	21	3861	53	3861	1.1				28.000	GFL11	-P180L4	64
46	4461	2.1	4.5	2466	19	4461	46	4461	2.1				32.344	GFL14	-P180L4	72
45	4515	1.0	4.4	2497	18	4515	45	4515	1.0				32.739	GFL11	-P180L4	64
41	5026	2.1	4.0	2779	17	5026	41	5026	2.1				36.444	GFL14	-P180L4	72
40	5087	0.9	3.9	2813	16	5087	40	5087	0.9				36.889	GFL11	-P180L4	64
37	5467	1.8	3.7	3023	15	5467	37	5467	1.8				39.642	GFL14	-P180L4	72
37	5549	0.9	3.6	3068	15	5549	37	5549	0.9				40.233	GFL11	-P180L4	64
33	6160	1.8	3.2	3406	13	6160	33	6160	1.8				44.667	GFL14	-P180L4	72
28	7180	1.4	2.8	3970	12	7180	28	7180	1.4				52.067	GFL14	-P180L4	72
25	8091	1.4	2.5	4474	10	8091	25	8091	1.4				58.667	GFL14	-P180L4	72

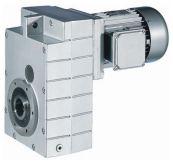

Selection tables, 4-pole motors

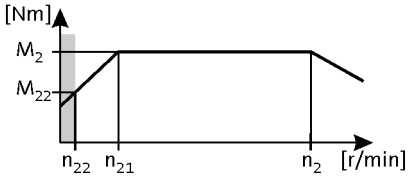

50 Hz: P_N = 30.0 kW
87 Hz: P_N = 52.0 kW

2-stage gearboxes

Mains operation 400 V, 50 Hz			Inverter operation 5 Hz -		- 20 Hz		- 50 Hz (1:10)			- 87 Hz (1:17.4)			i	Product		
n_2 [r/min]	M_2 [Nm]	c	n_{22} [r/min]	M_{22} [Nm]	n_{21} [r/min]	M_2 [Nm]	n_2 [r/min]	M_2 [Nm]	c	n_2 [r/min]	M_2 [Nm]	c		GFL	m500	
164	1692	1.3	16	748	67	1692	164	1692	1.3				9.010	GFL09	-P180V4	56
164	1692	2.1	16	748	67	1692	164	1692	2.1				9.010	GFL11	-P180V4	64
151	1840	2.1	15	814	61	1840	151	1840	2.1				9.799	GFL11	-P180V4	64
138	2013	1.9	14	890	56	2013	138	2013	1.9				10.720	GFL11	-P180V4	64
133	2097	1.1	13	927	54	2097	133	2097	1.1				11.167	GFL09	-P180V4	56
74	3746	2.1	7.3	1656	30	3746	74	3746	2.1				19.948	GFL14	-P180V4	72
66	4221	2.1	6.5	1866	27	4221	66	4221	2.1				22.476	GFL14	-P180V4	72
61	4593	1.9	5.9	2031	25	4593	61	4593	1.9				24.456	GFL14	-P180V4	72
54	5175	1.9	5.3	2288	22	5175	54	5175	1.9				27.556	GFL14	-P180V4	72
46	6074	1.5	4.5	2686	19	6074	46	6074	1.5				32.344	GFL14	-P180V4	72
41	6844	1.5	4.0	3026	17	6844	41	6844	1.5				36.444	GFL14	-P180V4	72

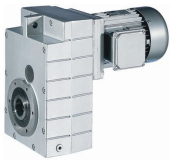

Selection tables, 4-pole motors

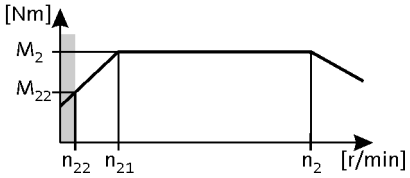

50 Hz: P_N = 37.0 kW
87 Hz: P_N = 64.6 kW

2-stage gearboxes

Mains operation 400 V, 50 Hz			Inverter operation 5 Hz -		- 20 Hz		- 50 Hz (1:10)			- 87 Hz (1:17.4)			i	Product		
n_2 [r/min]	M_2 [Nm]	c	n_{22} [r/min]	M_{22} [Nm]	n_{21} [r/min]	M_2 [Nm]	n_2 [r/min]	M_2 [Nm]	c	n_2 [r/min]	M_2 [Nm]	c		GFL	m500	
75	4599	2.1	7.3	2018	30	4599	75	4599	2.1				19.948	GFL14	-P225M4	72
66	5182	1.9	6.5	2274	27	5182	66	5182	1.9				22.476	GFL14	-P225M4	72
61	5638	1.8	5.9	2474	25	5638	61	5638	1.8				24.456	GFL14	-P225M4	72
54	6352	1.7	5.3	2787	22	6352	54	6352	1.7				27.556	GFL14	-P225M4	72
46	7456	1.5	4.5	3272	19	7456	46	7456	1.5				32.344	GFL14	-P225M4	72
41	8402	1.4	4.0	3686	17	8402	41	8402	1.4				36.444	GFL14	-P225M4	72

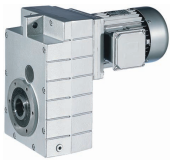

Selection tables, 4-pole motors

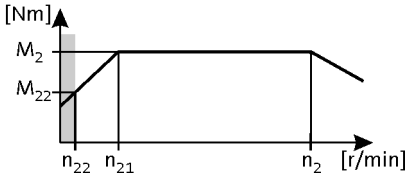

50 Hz: P_N = 45.0 kW
87 Hz: P_N = 78.1 kW

2-stage gearboxes

Mains operation 400 V, 50 Hz			Inverter operation 5 Hz -		- 20 Hz		- 50 Hz (1:10)			- 87 Hz (1:17.4)			i	Product		
n_2 [r/min]	M_2 [Nm]	c	n_{22} [r/min]	M_{22} [Nm]	n_{21} [r/min]	M_2 [Nm]	n_2 [r/min]	M_2 [Nm]	c	n_2 [r/min]	M_2 [Nm]	c		GFL	m500	
61	6866	1.5	5.9	3015	25	6866	61	6866	1.5				24.456	GFL14	-P225L4	72
46	9081	1.2	4.5	3987	19	9081	46	9081	1.2				32.344	GFL14	-P225L4	72
41	10232	1.1	4.0	4492	17	10232	41	10232	1.1				36.444	GFL14	-P225L4	72

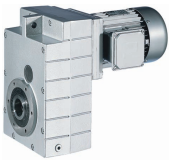

Dimensions, 4-pole motors

GFL06, 2-stage gearboxes

Dimensions with hollow shaft (HDR)
Dimensions with hollow shaft and centering (HCR)

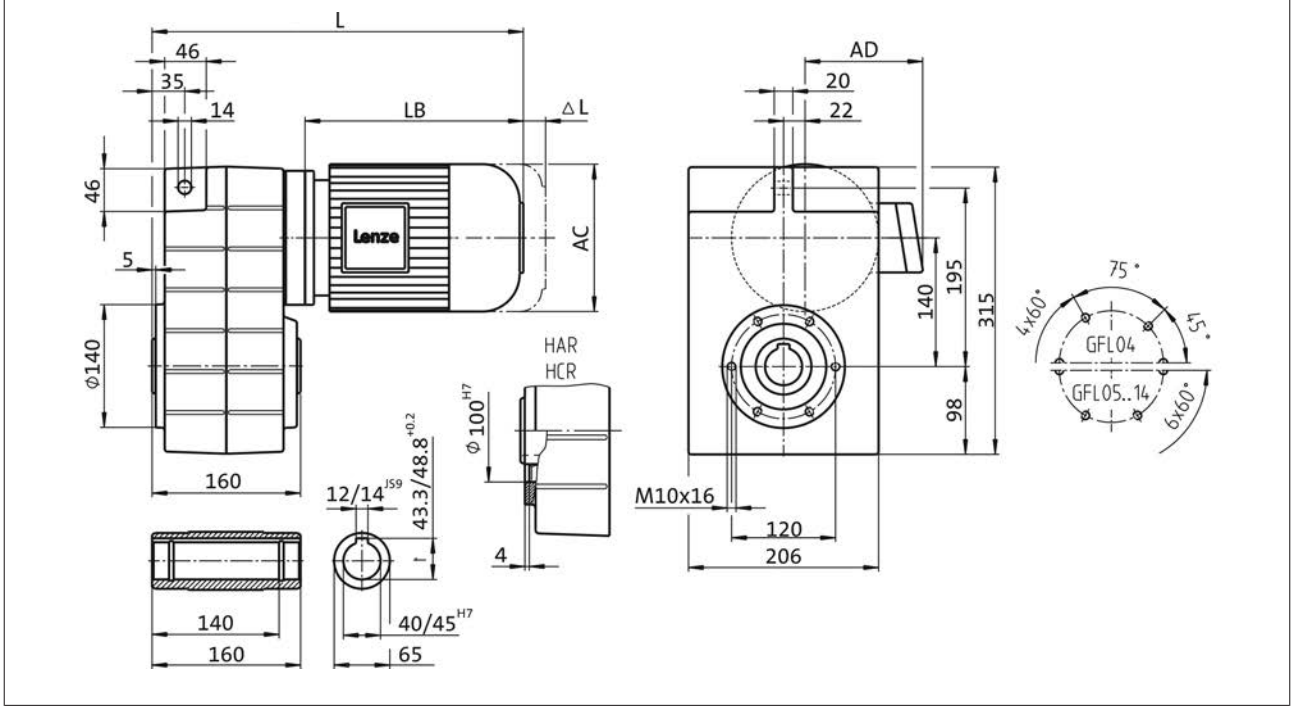

Product			m500	
			-P132L4	-P132M4
Dimensions				
Total length	**L**	**[mm]**	678	
Motor length	**LB**	**[mm]**	490	
Length of motor options	**Δ L**	**[mm]**	176	
Motor diameter	**AC**	**[mm]**	258	
Distance motor/connection	**AD**	**[mm]**	182	

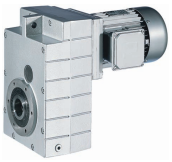

Dimensions, 4-pole motors

GFL06, 2-stage gearboxes

Dimensions with hollow shaft and flange (HCK)

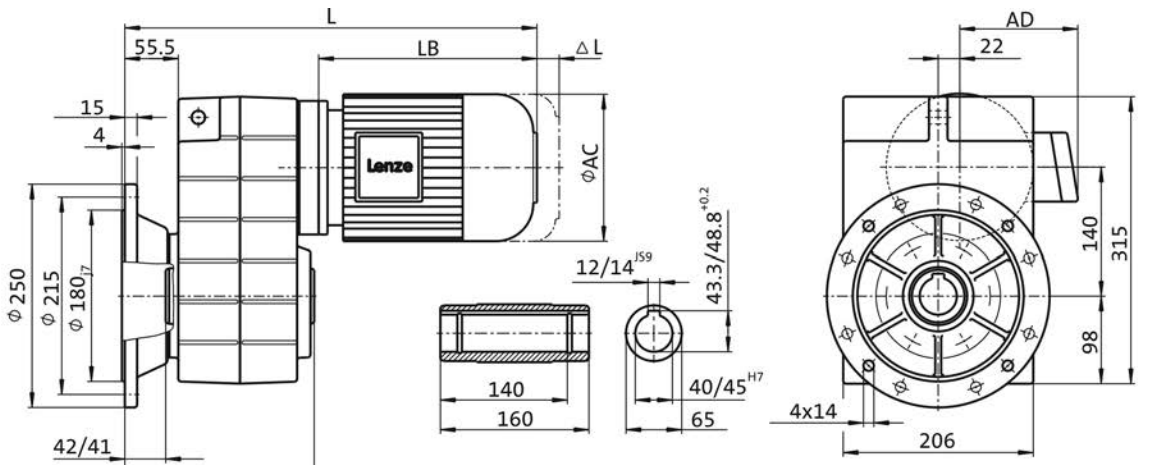

Product			m500	
			-P132L4	-P132M4
Dimensions				
Total length	**L**	**[mm]**	719	
Motor length	**LB**	**[mm]**	490	
Length of motor options	**Δ L**	**[mm]**	176	
Motor diameter	**AC**	**[mm]**	258	
Distance motor/connection	**AD**	**[mm]**	182	

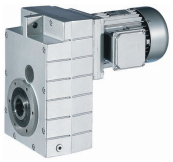

Dimensions, 4-pole motors

GFL06, 2-stage gearboxes

Dimensions with solid shaft (VDR)
Dimensions with hollow shaft and centering (VCR)

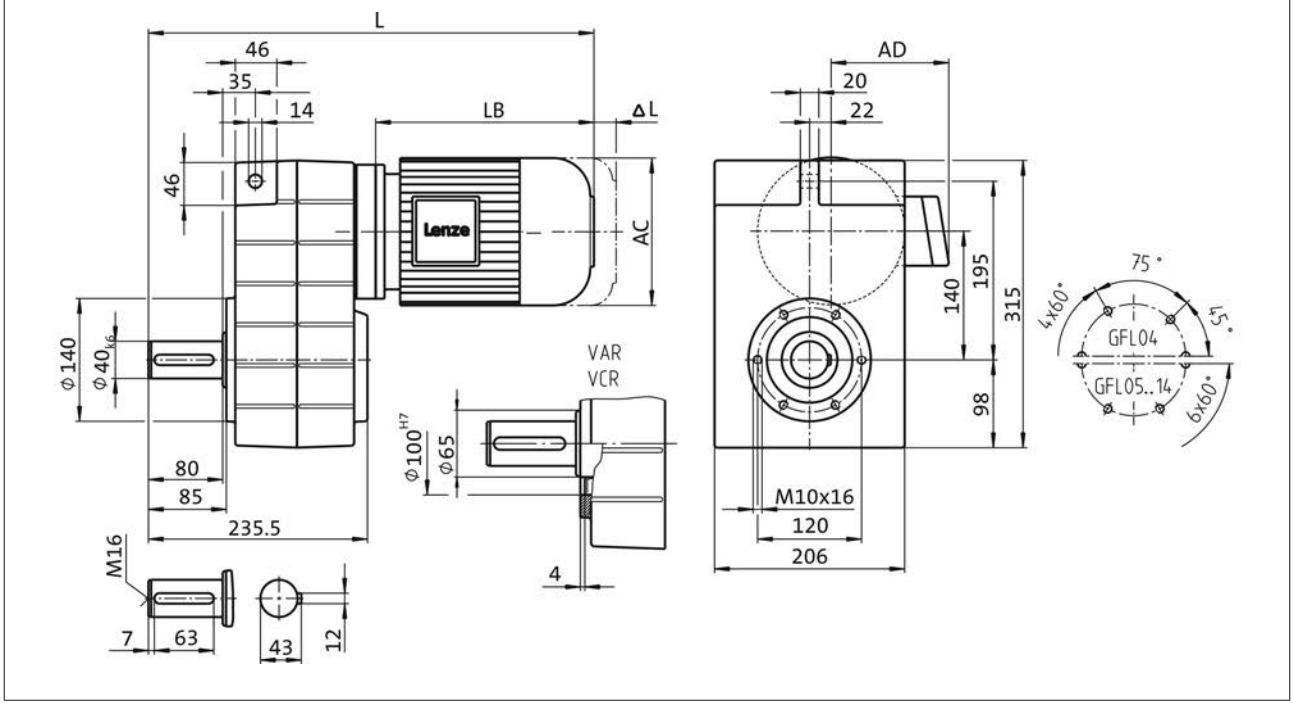

Product			m500	
			-P132L4	-P132M4
Dimensions				
Total length	**L**	**[mm]**	758	
Motor length	**LB**	**[mm]**	490	
Length of motor options	**Δ L**	**[mm]**	176	
Motor diameter	**AC**	**[mm]**	258	
Distance motor/connection	**AD**	**[mm]**	182	

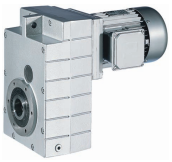

Dimensions, 4-pole motors

GFL06, 2-stage gearboxes

Dimensions with solid shaft and flange (VCK)

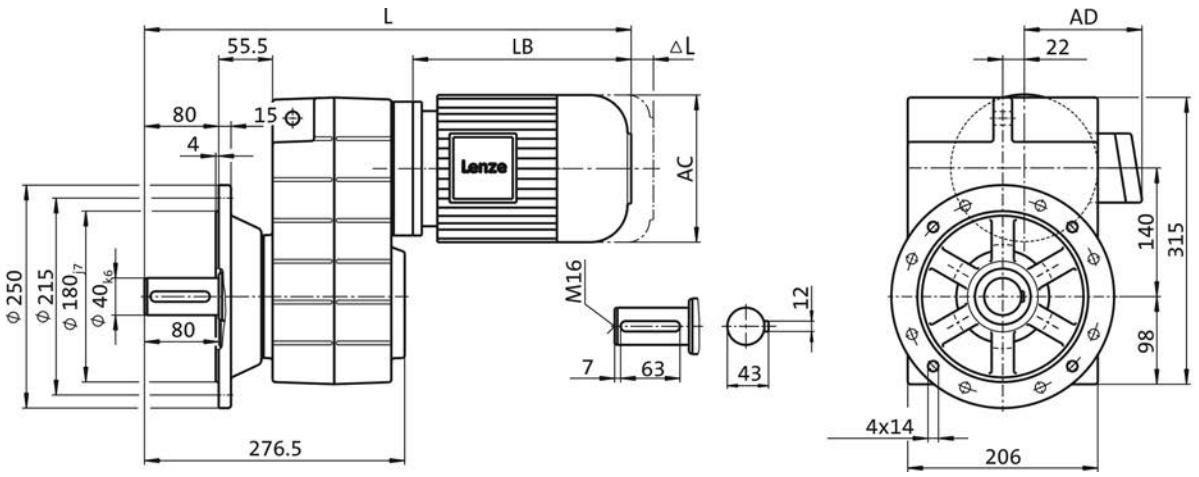

Product			m500	
			-P132L4	-P132M4
Dimensions				
Total length	**L**	**[mm]**	799	
Motor length	**LB**	**[mm]**	490	
Length of motor options	**Δ L**	**[mm]**	176	
Motor diameter	**AC**	**[mm]**	258	
Distance motor/connection	**AD**	**[mm]**	182	

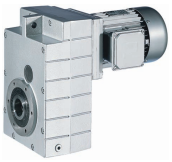

Dimensions, 4-pole motors

GFL07, 2-stage gearboxes

Dimensions with hollow shaft (HDR)
Dimensions with hollow shaft and centering (HCR)

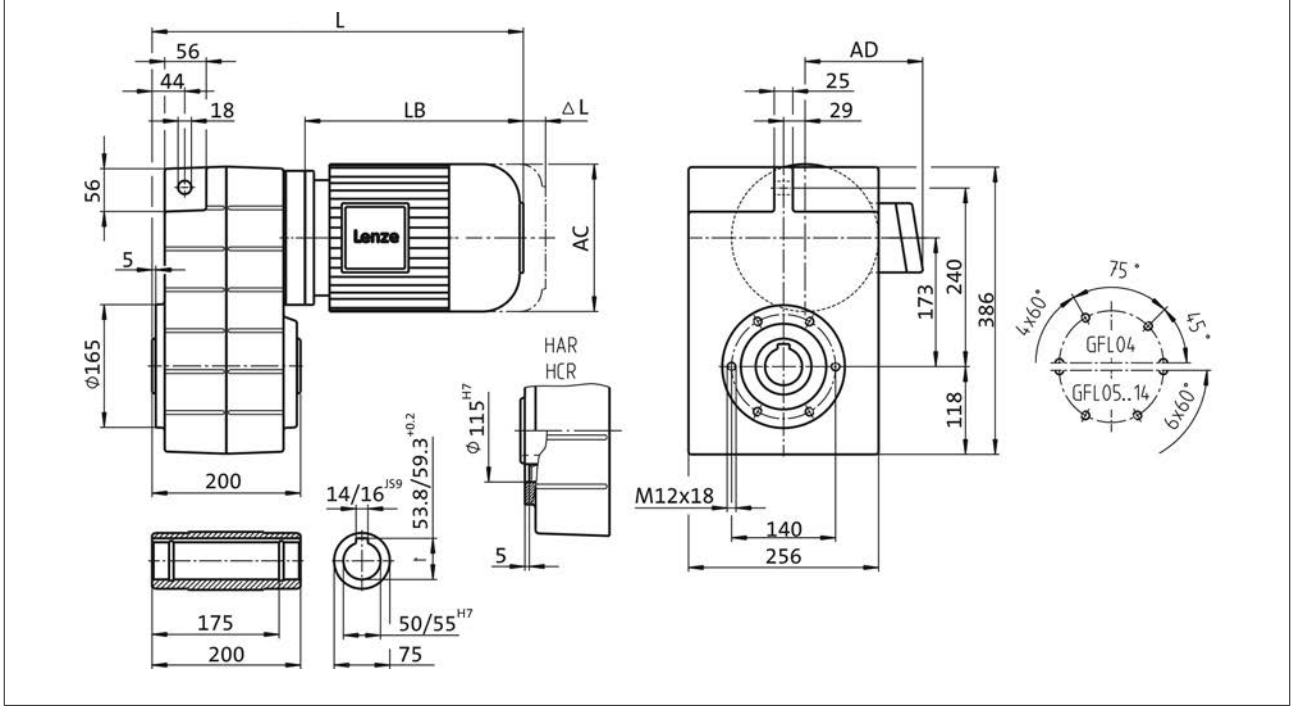

Product			m500			
			-P132L4	-P132M4	-P160L4	-P160M4
Dimensions						
Total length	**L**	**[mm]**	711		771	
Motor length	**LB**	**[mm]**	490		545	
Length of motor options	**Δ L**	**[mm]**	176		291	
Motor diameter	**AC**	**[mm]**	258		310	
Distance motor/connection	**AD**	**[mm]**	182		231	

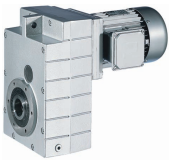

Dimensions, 4-pole motors

GFL07, 2-stage gearboxes

Dimensions with hollow shaft and flange (HCK)

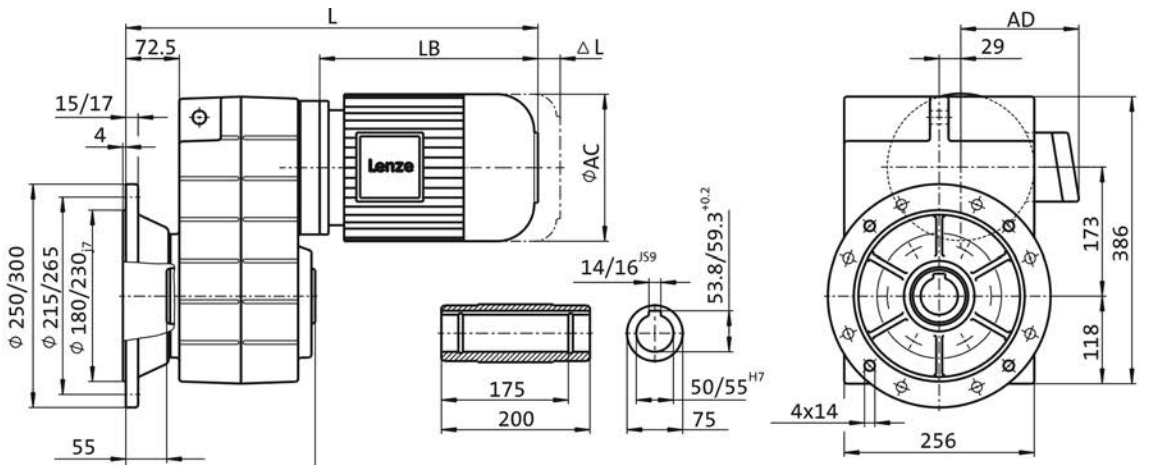

Product			m500			
			-P132L4	-P132M4	-P160L4	-P160M4
Dimensions						
Total length	**L**	**[mm]**	766		826	
Motor length	**LB**	**[mm]**	490		545	
Length of motor options	**Δ L**	**[mm]**	176		291	
Motor diameter	**AC**	**[mm]**	258		310	
Distance motor/connection	**AD**	**[mm]**	182		231	

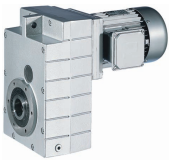

Dimensions, 4-pole motors

GFL07, 2-stage gearboxes

Dimensions with solid shaft (VDR)
Dimensions with hollow shaft and centering (VCR)

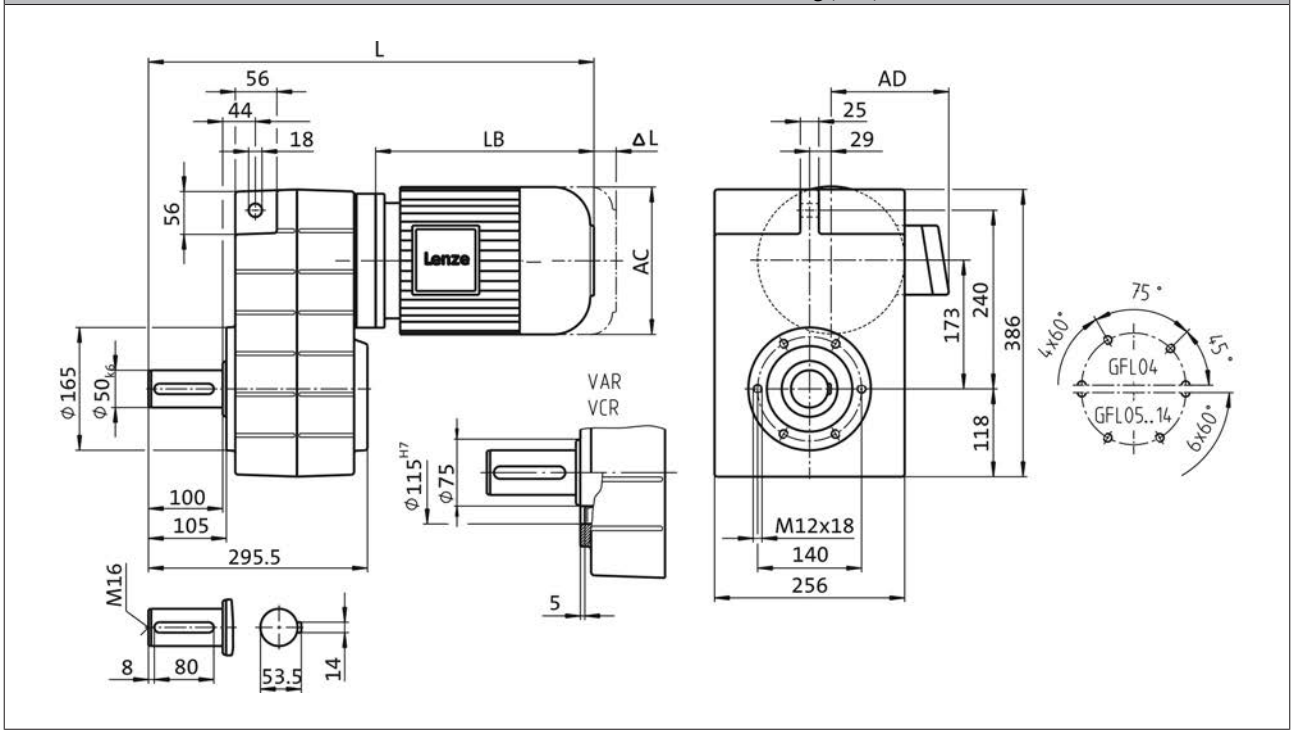

Product			m500			
			-P132L4	-P132M4	-P160L4	-P160M4
Dimensions						
Total length	**L**	**[mm]**	811		871	
Motor length	**LB**	**[mm]**	490		545	
Length of motor options	**Δ L**	**[mm]**	176		291	
Motor diameter	**AC**	**[mm]**	258		310	
Distance motor/connection	**AD**	**[mm]**	182		231	

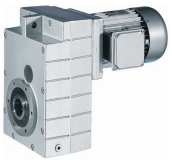

Dimensions, 4-pole motors

GFL07, 2-stage gearboxes

Dimensions with solid shaft and flange (VCK)

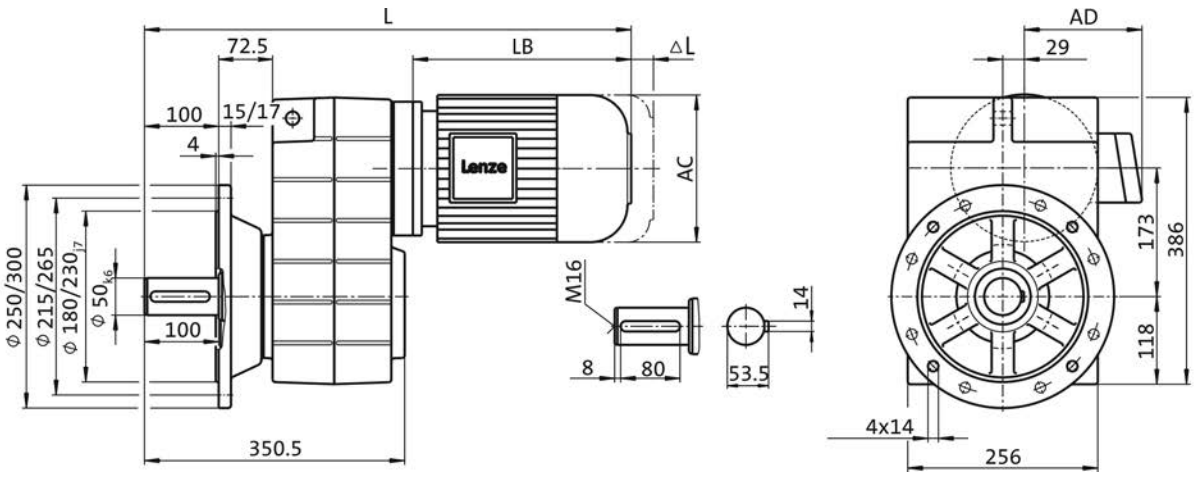

Product			m500			
			-P132L4	-P132M4	-P160L4	-P160M4
Dimensions						
Total length	**L**	**[mm]**	866		926	
Motor length	**LB**	**[mm]**	490		545	
Length of motor options	**Δ L**	**[mm]**	176		291	
Motor diameter	**AC**	**[mm]**	258		310	
Distance motor/connection	**AD**	**[mm]**	182		231	

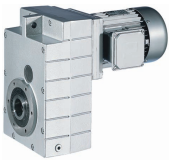

Dimensions, 4-pole motors

GFL09, 2-stage gearboxes

Dimensions with hollow shaft (HDR)
Dimensions with hollow shaft and centering (HCR)

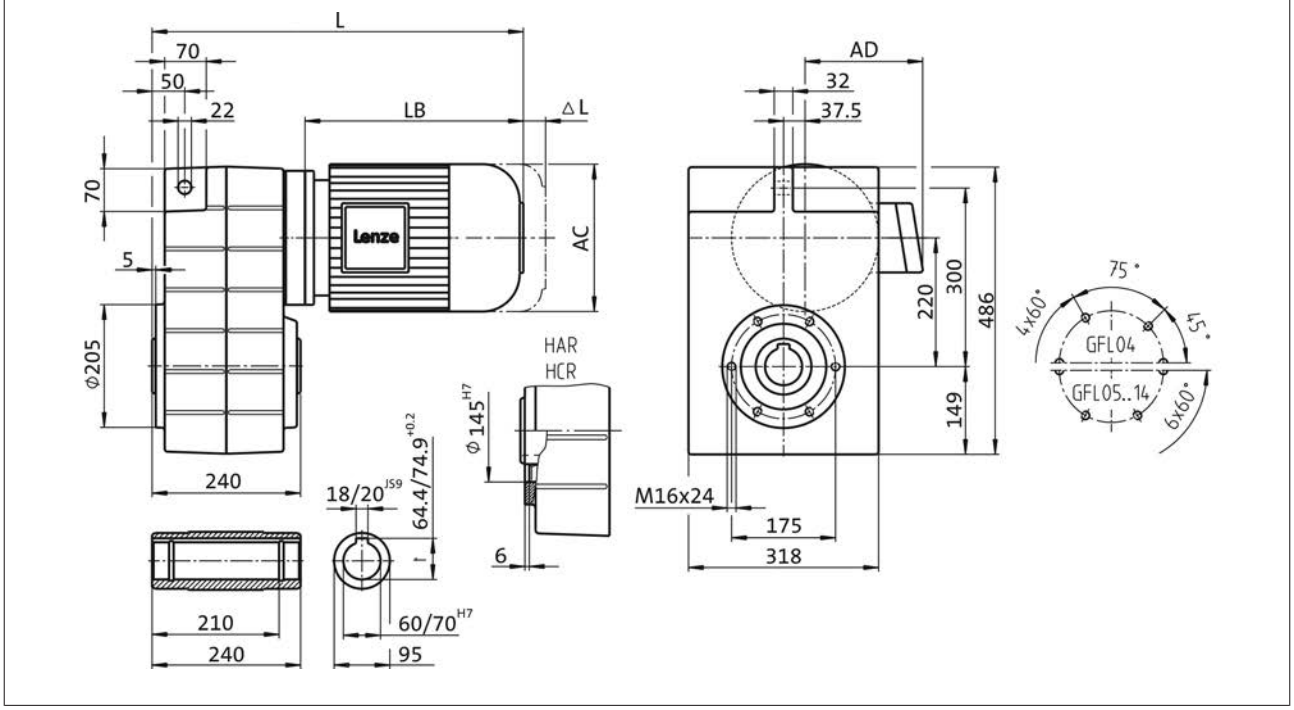

Product			m500						
			-P132L4	-P132M4	-P160L4	-P160M4	-P180L4	-P180M4	-P180V4
Dimensions									
Total length	**L**	**[mm]**	745		805		860		908
Motor length	**LB**	**[mm]**	490		545		600		648
Length of motor options	**Δ L**	**[mm]**	176		291		248		
Motor diameter	**AC**	**[mm]**	258		310		281		
Distance motor/connection	**AD**	**[mm]**	182		231		282		

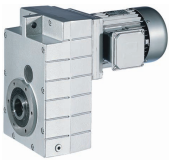

Dimensions, 4-pole motors

GFL09, 2-stage gearboxes

Dimensions with hollow shaft and flange (HCK)

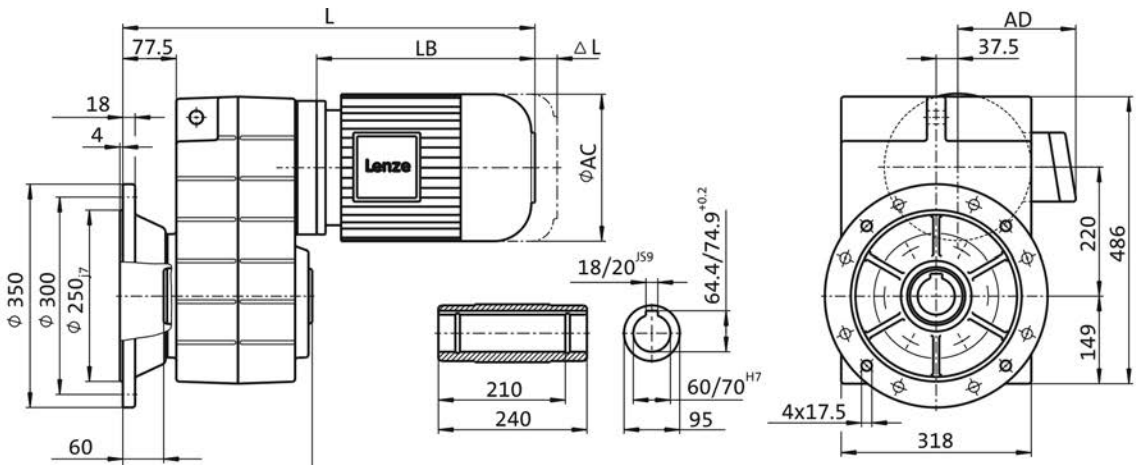

Product			m500						
			-P132L4	-P132M4	-P160L4	-P160M4	-P180L4	-P180M4	-P180V4
Dimensions									
Total length	**L**	**[mm]**	805		865		920		968
Motor length	**LB**	**[mm]**	490		545		600		648
Length of motor options	**Δ L**	**[mm]**	176		291		248		
Motor diameter	**AC**	**[mm]**	258		310		281		
Distance motor/connection	**AD**	**[mm]**	182		231		282		

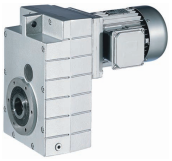

Dimensions, 4-pole motors

GFL09, 2-stage gearboxes

Dimensions with solid shaft (VDR)
Dimensions with hollow shaft and centering (VCR)

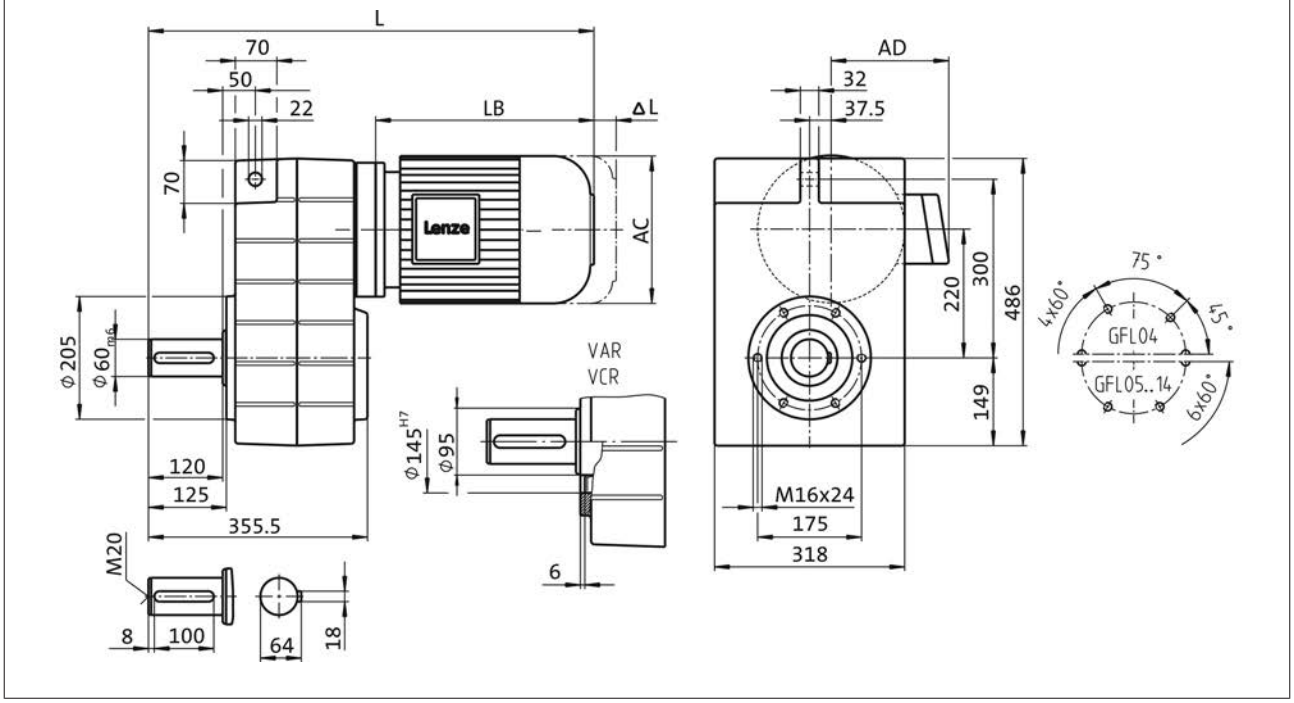

Product			m500						
			-P132L4	-P132M4	-P160L4	-P160M4	-P180L4	-P180M4	-P180V4
Dimensions									
Total length	**L**	**[mm]**	865		925		980		1028
Motor length	**LB**	**[mm]**	490		545		600		648
Length of motor options	**Δ L**	**[mm]**	176		291		248		
Motor diameter	**AC**	**[mm]**	258		310		281		
Distance motor/connection	**AD**	**[mm]**	182		231		282		

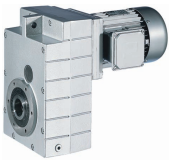

Dimensions, 4-pole motors

GFL09, 2-stage gearboxes

Dimensions with solid shaft and flange (VCK)

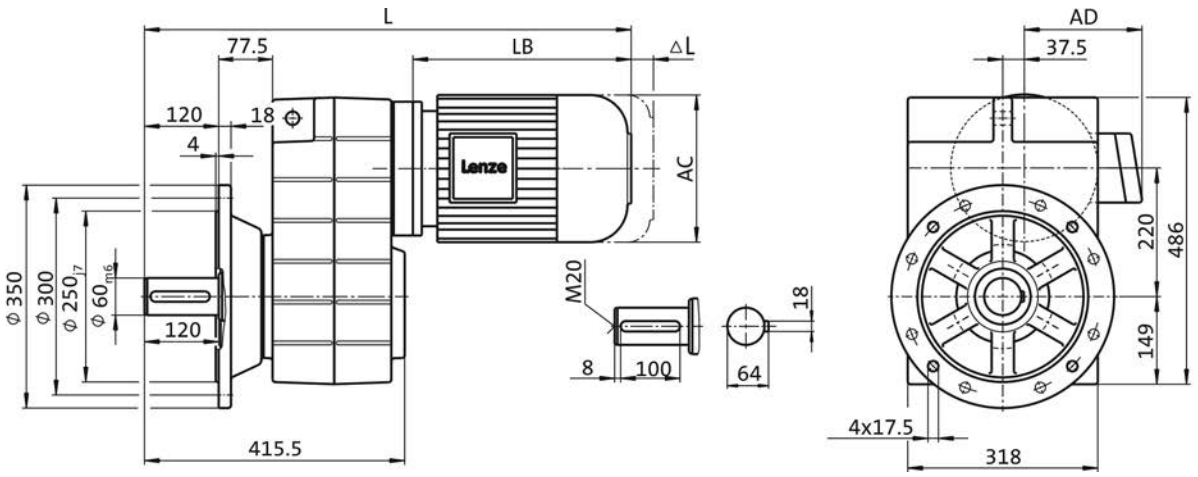

Product			m500						
			-P132L4	-P132M4	-P160L4	-P160M4	-P180L4	-P180M4	-P180V4
Dimensions									
Total length	**L**	**[mm]**	925		985		1040		1088
Motor length	**LB**	**[mm]**	490		545		600		648
Length of motor options	**Δ L**	**[mm]**	176		291		248		
Motor diameter	**AC**	**[mm]**	258		310		281		
Distance motor/connection	**AD**	**[mm]**	182		231		282		

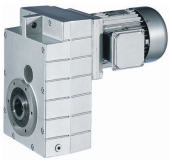

Dimensions, 4-pole motors

GFL09, 3-stage gearboxes

Dimensions with hollow shaft (HDR)
Dimensions with hollow shaft and centering (HCR)

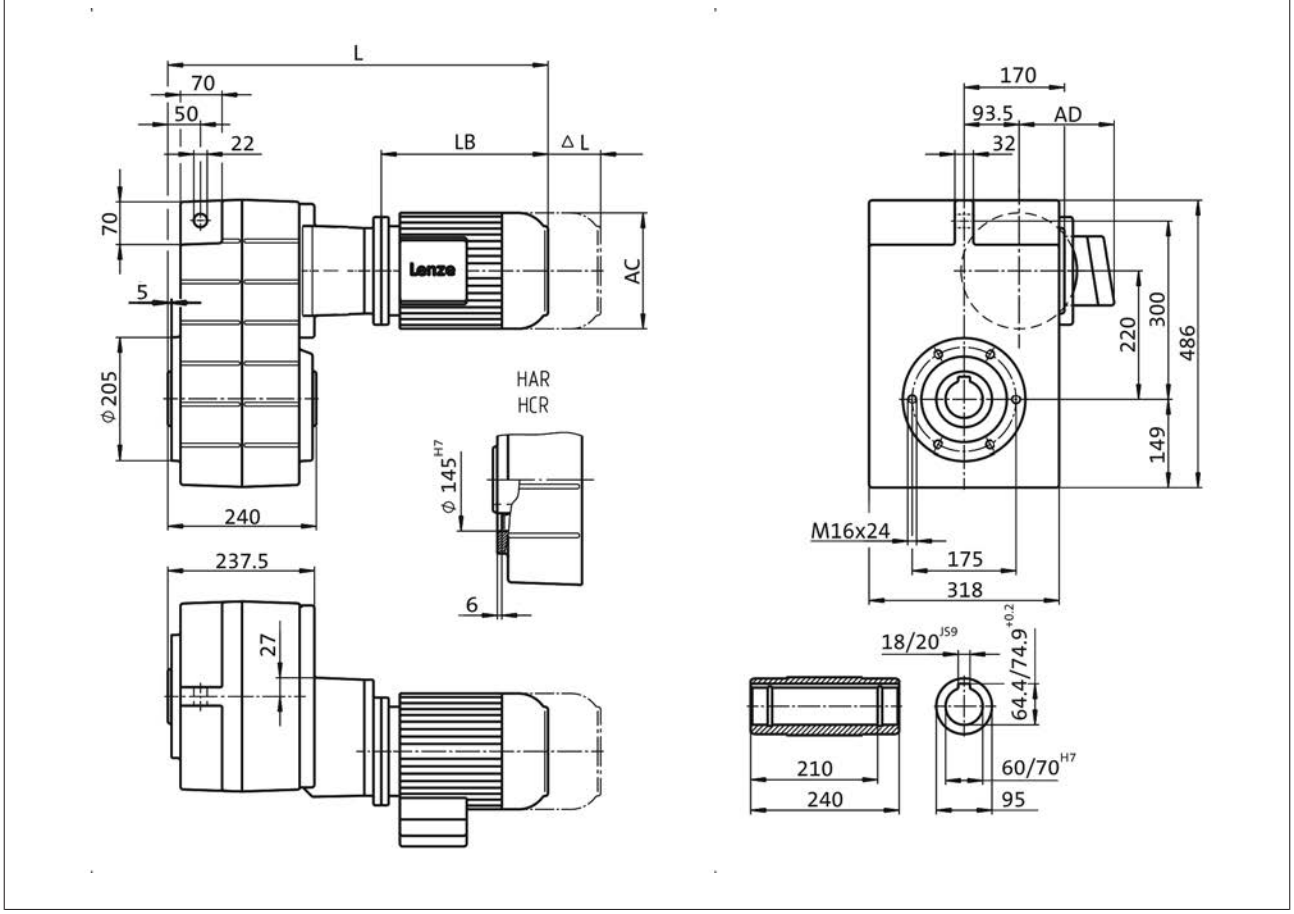

Product			m500
			-P132M4
Dimensions			
Total length	**L**	**[mm]**	868
Motor length	**LB**	**[mm]**	490
Length of motor options	**Δ L**	**[mm]**	176
Motor diameter	**AC**	**[mm]**	258
Distance motor/connection	**AD**	**[mm]**	182

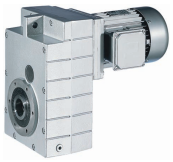

Dimensions, 4-pole motors

GFL09, 3-stage gearboxes

Dimensions with hollow shaft and flange (HCK)

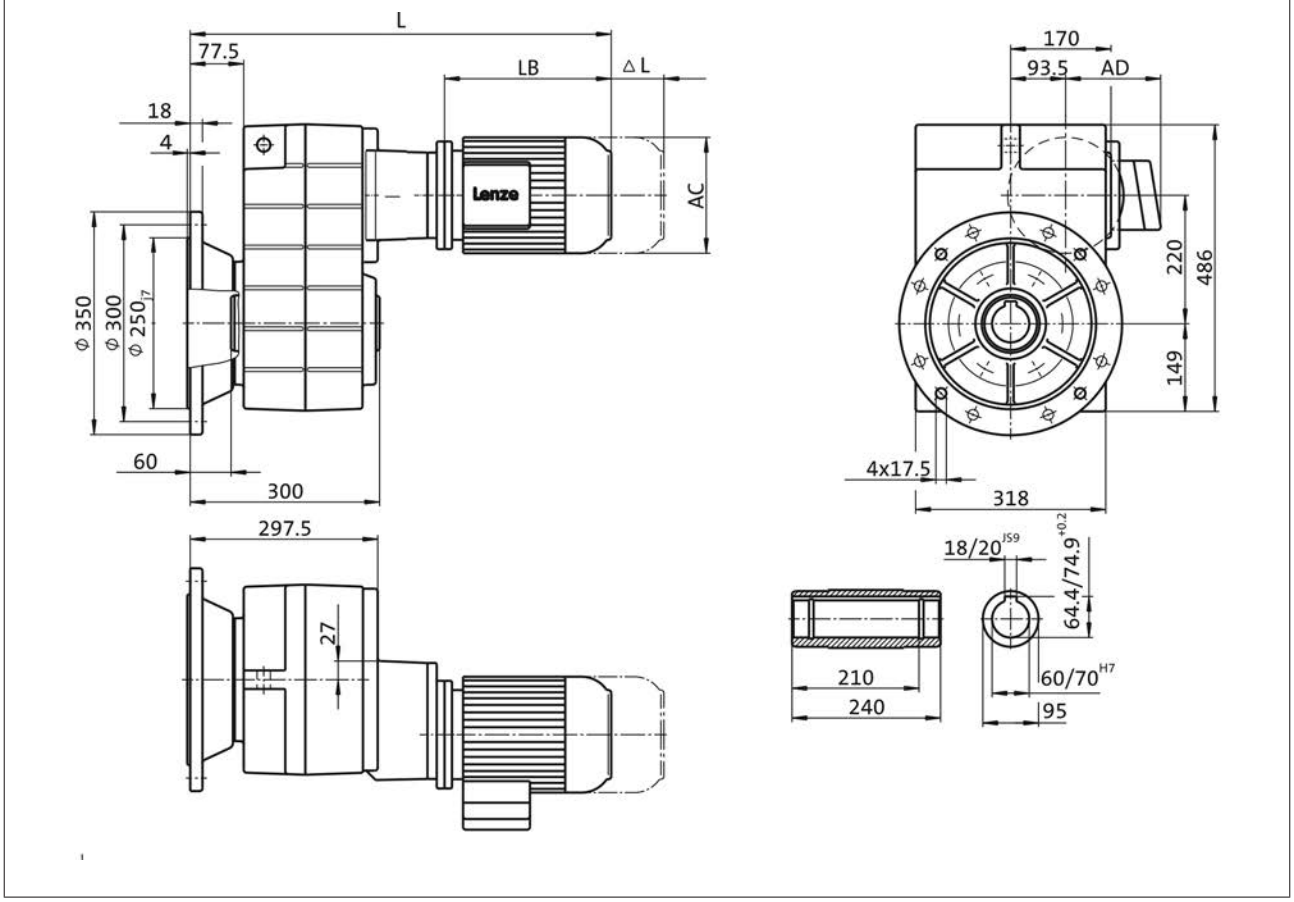

Product			m500
			-P132M4
Dimensions			
Total length	**L**	**[mm]**	928
Motor length	**LB**	**[mm]**	490
Length of motor options	**Δ L**	**[mm]**	176
Motor diameter	**AC**	**[mm]**	258
Distance motor/connection	**AD**	**[mm]**	182

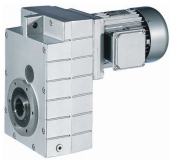

Dimensions, 4-pole motors

GFL09, 3-stage gearboxes

Dimensions with solid shaft (VDR)
Dimensions with hollow shaft and centering (VCR)

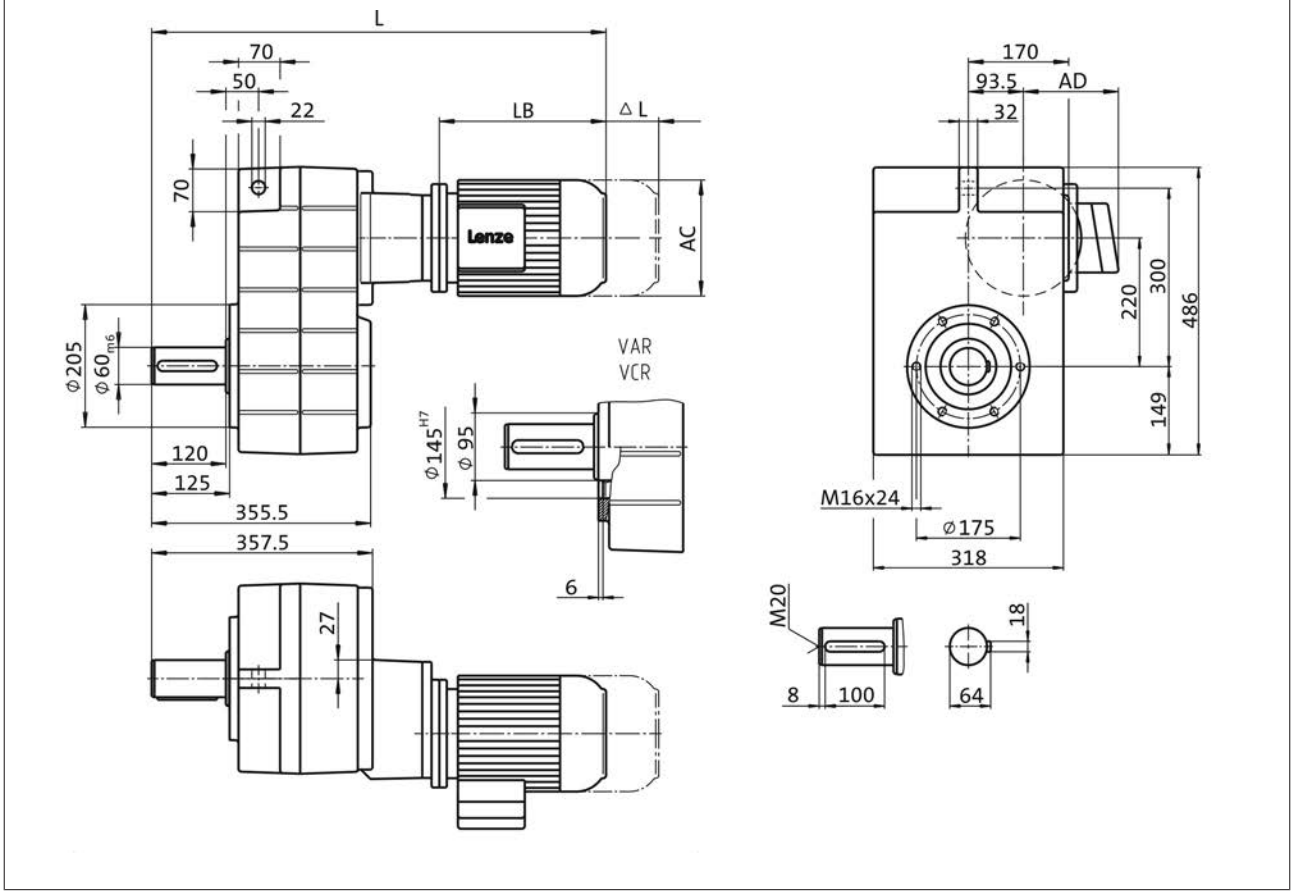

Product			m500
			-P132M4
Dimensions			
Total length	**L**	**[mm]**	988
Motor length	**LB**	**[mm]**	490
Length of motor options	**Δ L**	**[mm]**	176
Motor diameter	**AC**	**[mm]**	258
Distance motor/connection	**AD**	**[mm]**	182

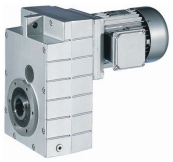

Dimensions, 4-pole motors

GFL09, 3-stage gearboxes

Dimensions with solid shaft and flange (VCK)

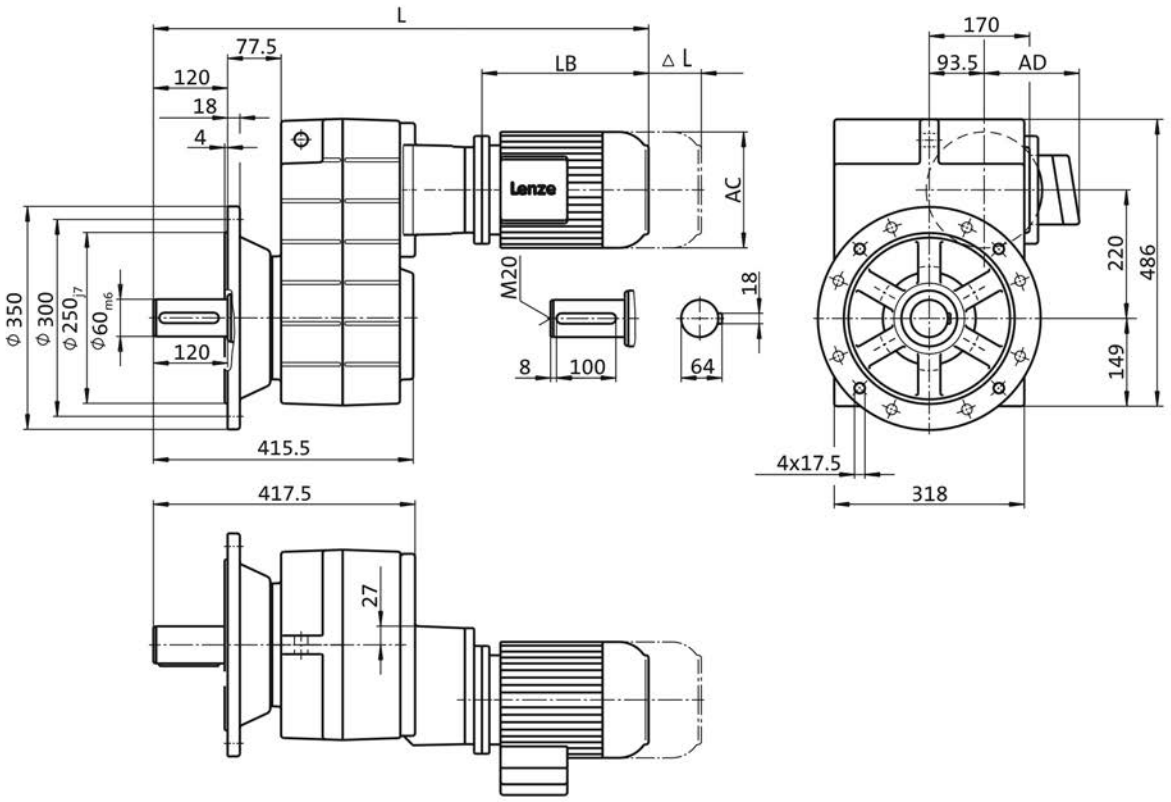

Product			m500
			-P132M4
Dimensions			
Total length	**L**	**[mm]**	1048
Motor length	**LB**	**[mm]**	490
Length of motor options	**Δ L**	**[mm]**	176
Motor diameter	**AC**	**[mm]**	258
Distance motor/connection	**AD**	**[mm]**	182

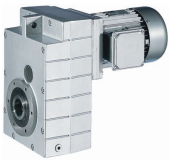

Dimensions, 4-pole motors

GFL11, 2-stage gearboxes

Dimensions with hollow shaft (HDR)
Dimensions with hollow shaft and centering (HCR)

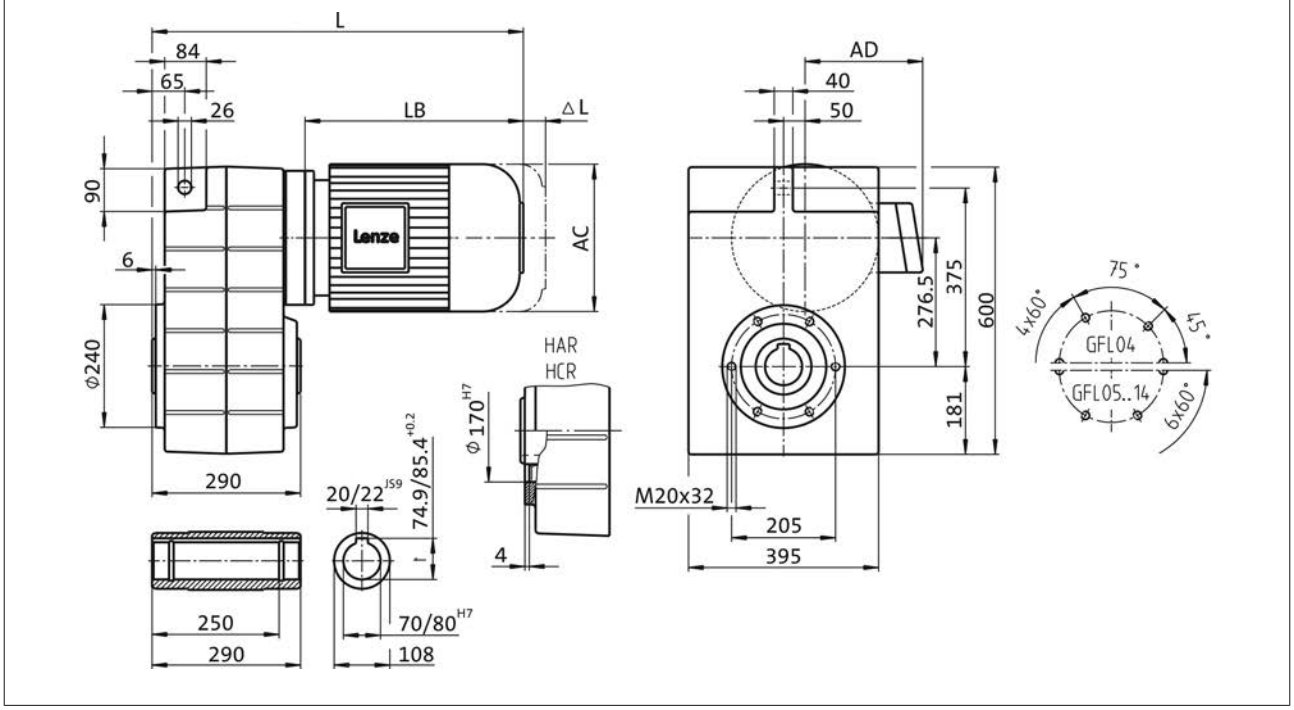

Product			m500						
			-P132L4	-P132M4	-P160L4	-P160M4	-P180L4	-P180M4	-P180V4
Dimensions									
Total length	**L**	**[mm]**	786		846		901		949
Motor length	**LB**	**[mm]**	490		545		600		648
Length of motor options	**Δ L**	**[mm]**	176		291		248		
Motor diameter	**AC**	**[mm]**	258		310		281		
Distance motor/connection	**AD**	**[mm]**	182		231		282		

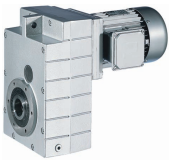

Dimensions, 4-pole motors

GFL11, 2-stage gearboxes

Dimensions with hollow shaft and flange (HCK)

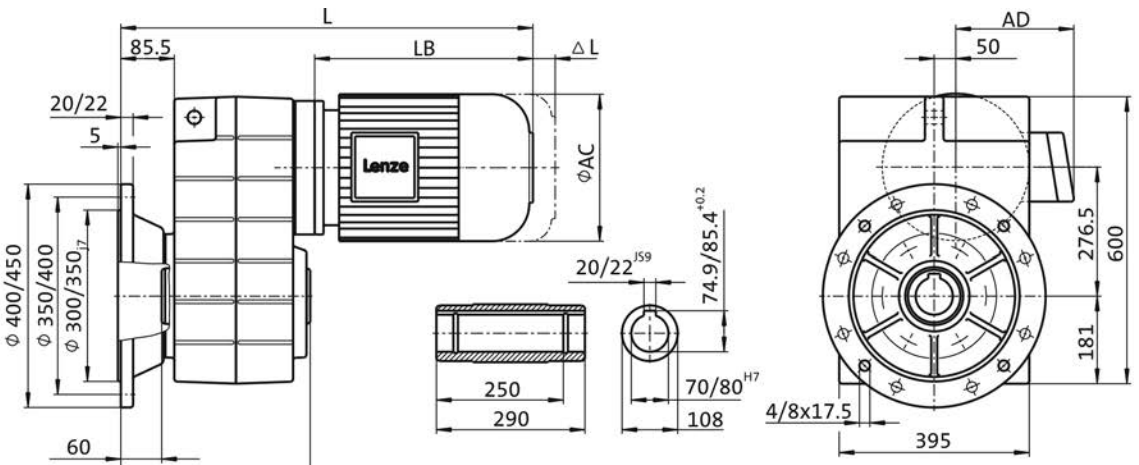

Product			m500						
			-P132L4	-P132M4	-P160L4	-P160M4	-P180L4	-P180M4	-P180V4
Dimensions									
Total length	**L**	**[mm]**	846		906		961		1009
Motor length	**LB**	**[mm]**	490		545		600		648
Length of motor options	**Δ L**	**[mm]**	176		291		248		
Motor diameter	**AC**	**[mm]**	258		310		281		
Distance motor/connection	**AD**	**[mm]**	182		231		282		

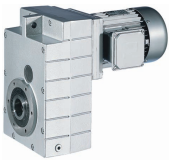

Dimensions, 4-pole motors

GFL11, 2-stage gearboxes

Dimensions with solid shaft (VDR)
Dimensions with hollow shaft and centering (VCR)

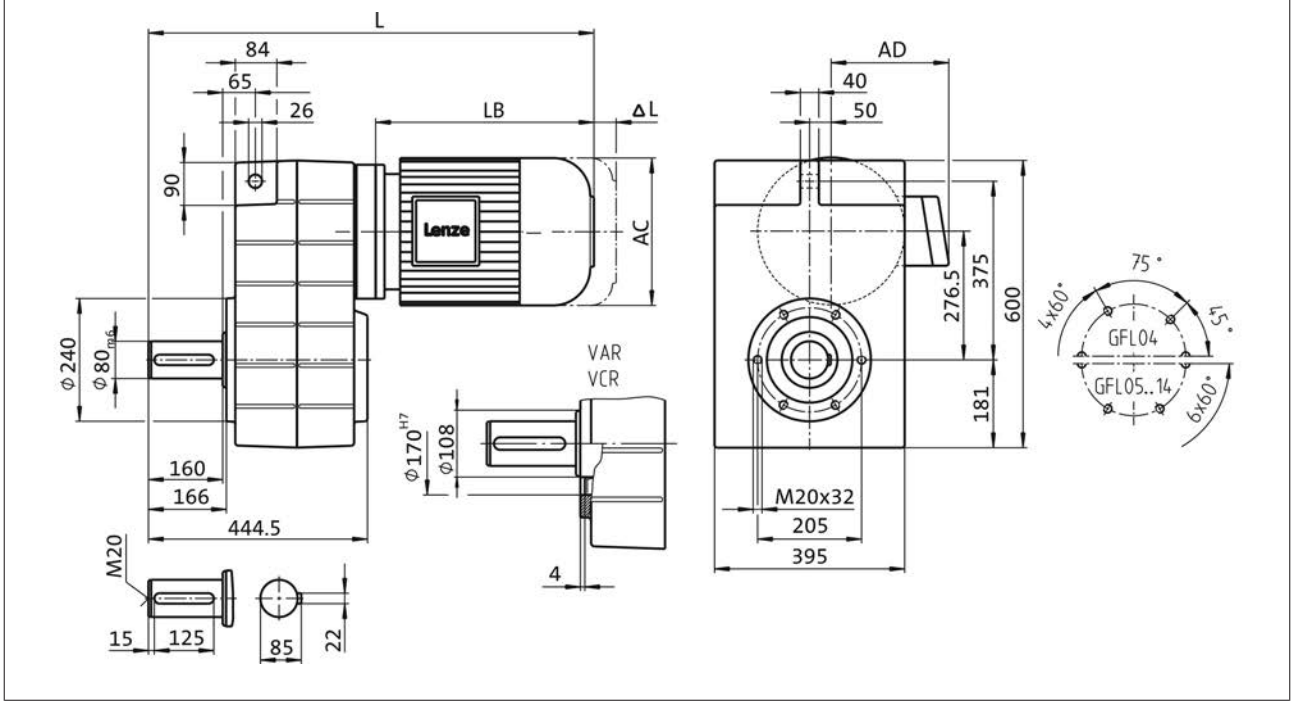

Product			m500						
			-P132L4	-P132M4	-P160L4	-P160M4	-P180L4	-P180M4	-P180V4
Dimensions									
Total length	**L**	**[mm]**	946		1006		1061		1109
Motor length	**LB**	**[mm]**	490		545		600		648
Length of motor options	**Δ L**	**[mm]**	176		291		248		
Motor diameter	**AC**	**[mm]**	258		310		281		
Distance motor/connection	**AD**	**[mm]**	182		231		282		

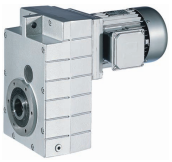

Dimensions, 4-pole motors

GFL11, 2-stage gearboxes

Dimensions with solid shaft and flange (VCK)

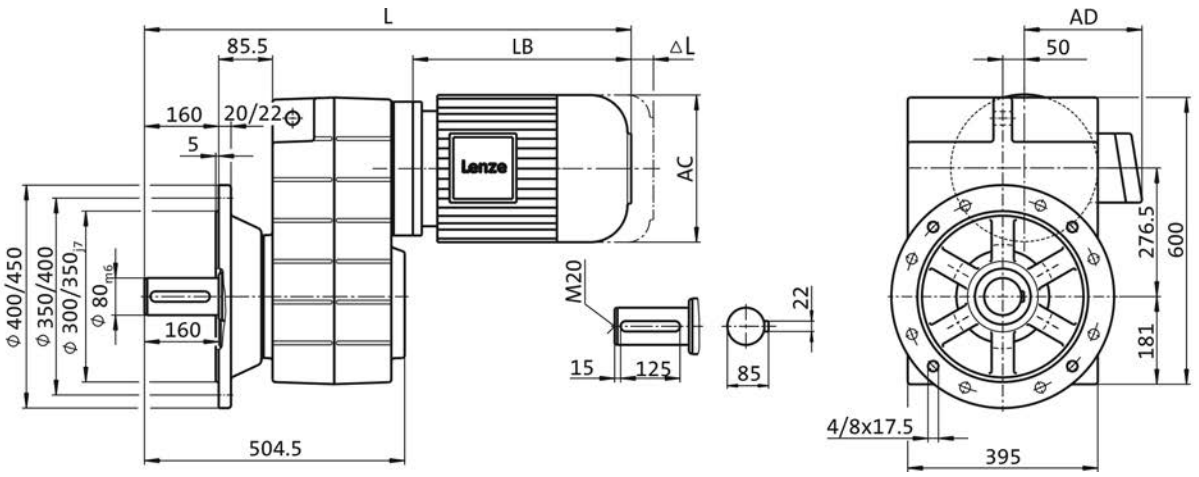

Product			m500						
			-P132L4	-P132M4	-P160L4	-P160M4	-P180L4	-P180M4	-P180V4
Dimensions									
Total length	**L**	**[mm]**	1006		1066		1121		1169
Motor length	**LB**	**[mm]**	490		545		600		648
Length of motor options	**Δ L**	**[mm]**	176		291		248		
Motor diameter	**AC**	**[mm]**	258		310		281		
Distance motor/connection	**AD**	**[mm]**	182		231		282		

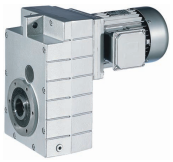

Dimensions, 4-pole motors

GFL11, 3-stage gearboxes

Dimensions with hollow shaft (HDR)
Dimensions with hollow shaft and centering (HCR)

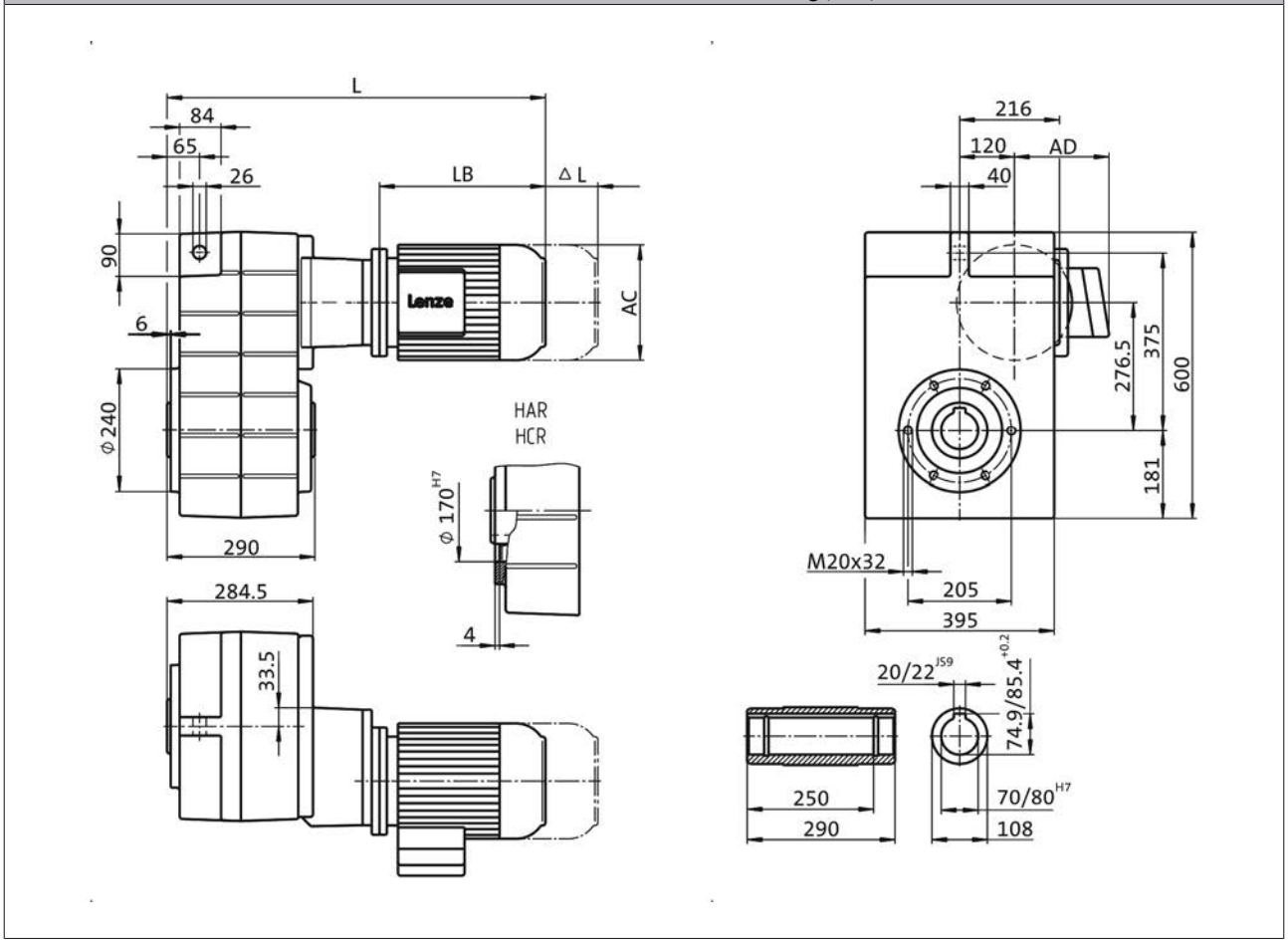

Product			m500	
			-P132L4	-P132M4
Dimensions				
Total length	**L**	**[mm]**	928	
Motor length	**LB**	**[mm]**	490	
Length of motor options	**Δ L**	**[mm]**	176	
Motor diameter	**AC**	**[mm]**	258	
Distance motor/connection	**AD**	**[mm]**	182	

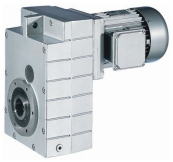

Dimensions, 4-pole motors

GFL11, 3-stage gearboxes

Dimensions with hollow shaft and flange (HCK)

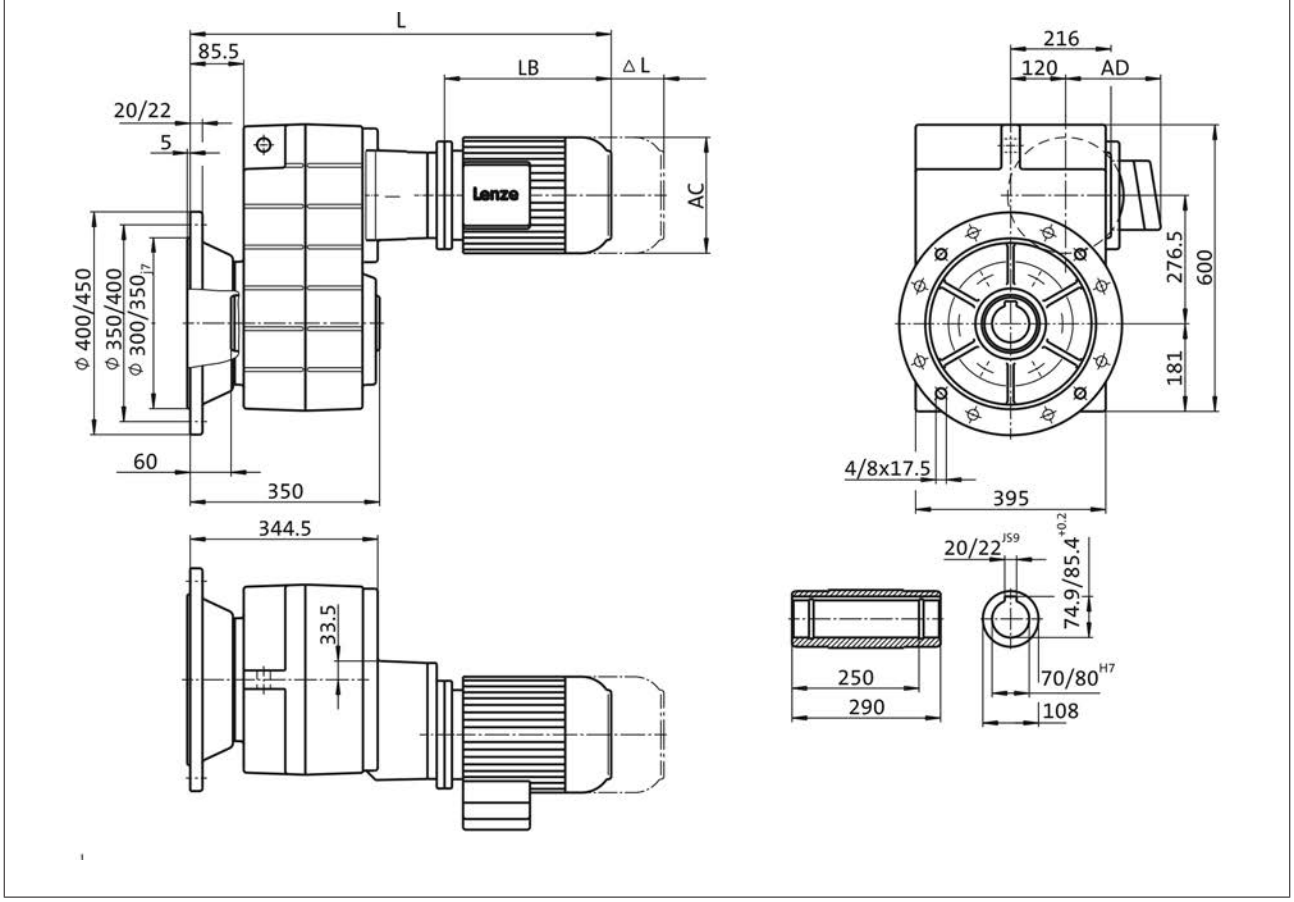

Product			m500	
			-P132L4	-P132M4
Dimensions				
Total length	**L**	**[mm]**	988	
Motor length	**LB**	**[mm]**	490	
Length of motor options	**Δ L**	**[mm]**	176	
Motor diameter	**AC**	**[mm]**	258	
Distance motor/connection	**AD**	**[mm]**	182	

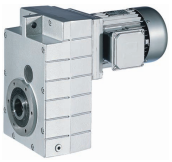

Dimensions, 4-pole motors

GFL11, 3-stage gearboxes

Dimensions with solid shaft (VDR)
Dimensions with hollow shaft and centering (VCR)

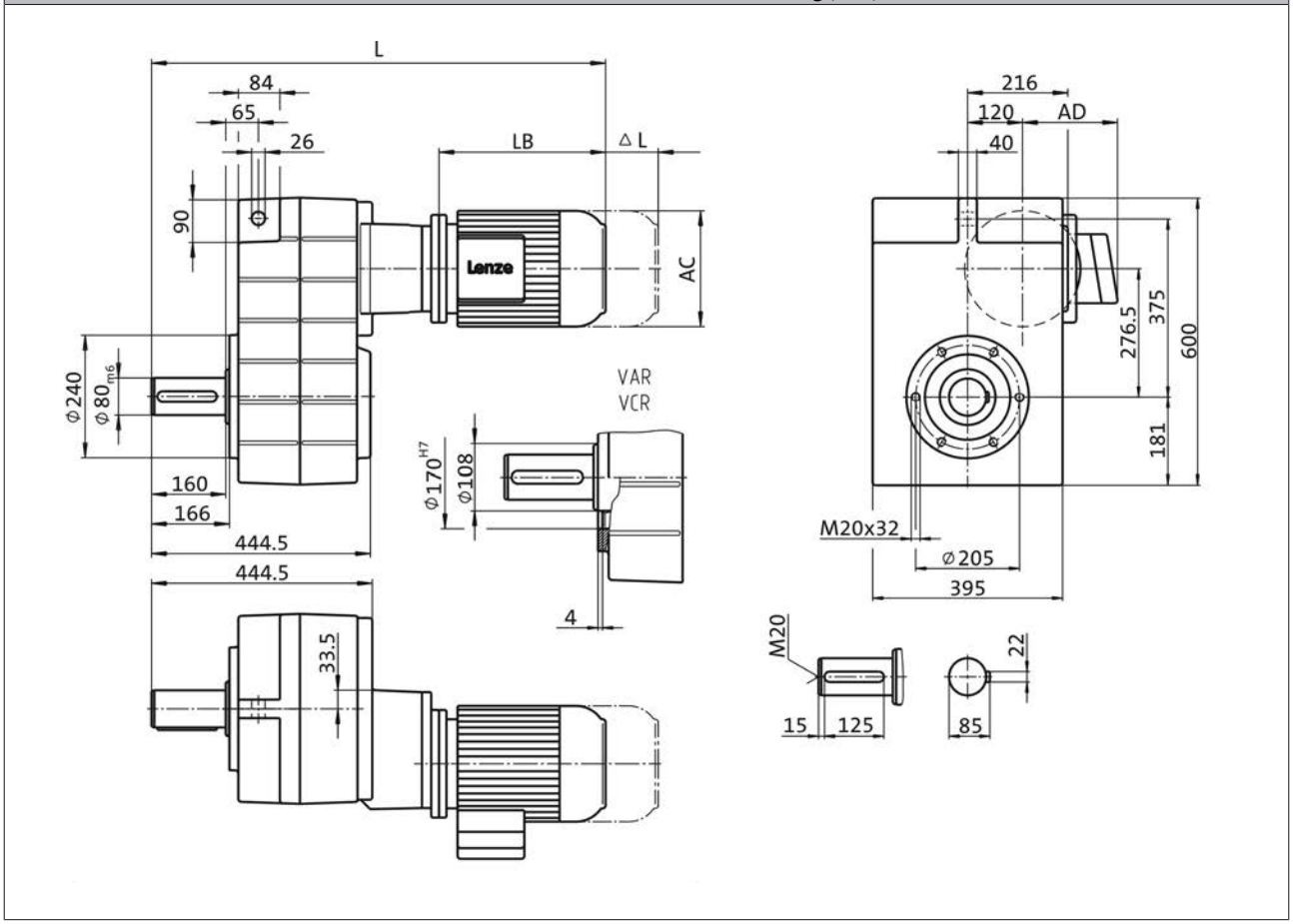

Product			m500	
			-P132L4	-P132M4
Dimensions				
Total length	**L**	**[mm]**	1088	
Motor length	**LB**	**[mm]**	490	
Length of motor options	**Δ L**	**[mm]**	176	
Motor diameter	**AC**	**[mm]**	258	
Distance motor/connection	**AD**	**[mm]**	182	

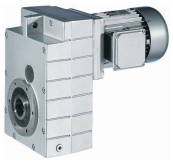

Dimensions, 4-pole motors

GFL11, 3-stage gearboxes

Dimensions with solid shaft and flange (VCK)

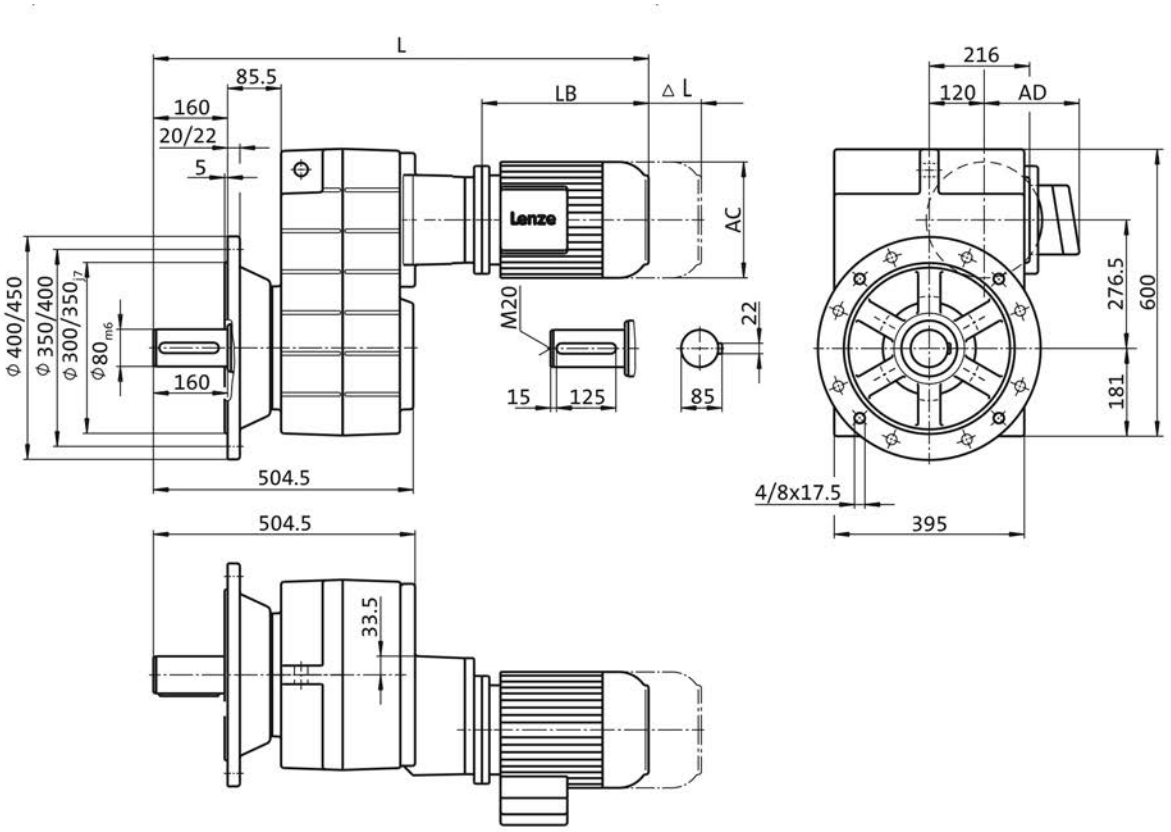

Product			m500	
			-P132L4	-P132M4
Dimensions				
Total length	**L**	**[mm]**	1148	
Motor length	**LB**	**[mm]**	490	
Length of motor options	**Δ L**	**[mm]**	176	
Motor diameter	**AC**	**[mm]**	258	
Distance motor/connection	**AD**	**[mm]**	182	

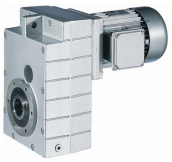

Dimensions, 4-pole motors

GFL14, 2-stage gearboxes

Dimensions with hollow shaft (HDR)
Dimensions with hollow shaft and centering (HCR)

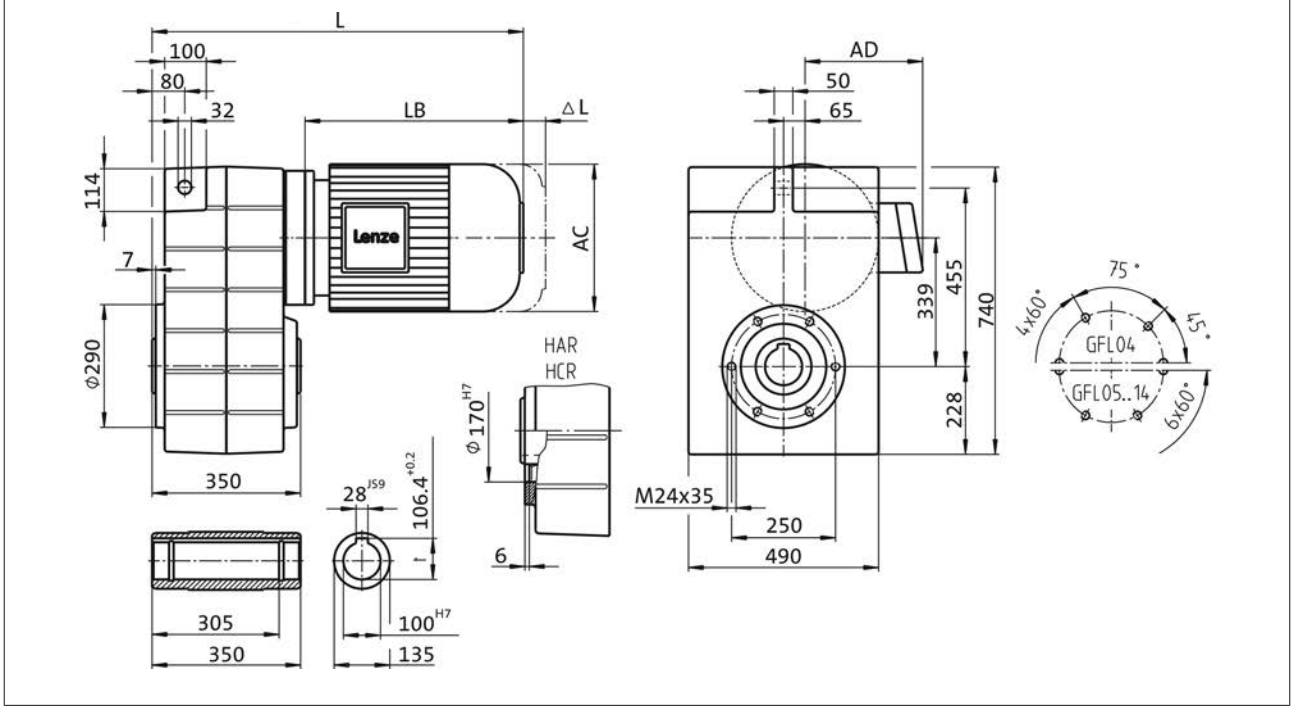

Product			m500								
			-P132L4	-P132M4	-P160L4	-P160M4	-P180L4	-P180M4	-P180V4	-P225L4	-P225M4
Dimensions											
Total length	**L**	**[mm]**	831		891		946		994	1116	
Motor length	**LB**	**[mm]**	490		545		600		648	770	
Length of motor options	**Δ L**	**[mm]**	176		291		248			212	
Motor diameter	**AC**	**[mm]**	258		310		281			456	
Distance motor/connection	**AD**	**[mm]**	182		231		282			330	

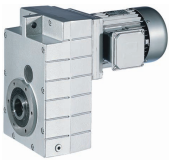

Dimensions, 4-pole motors

GFL14, 2-stage gearboxes

Dimensions with hollow shaft and flange (HCK)

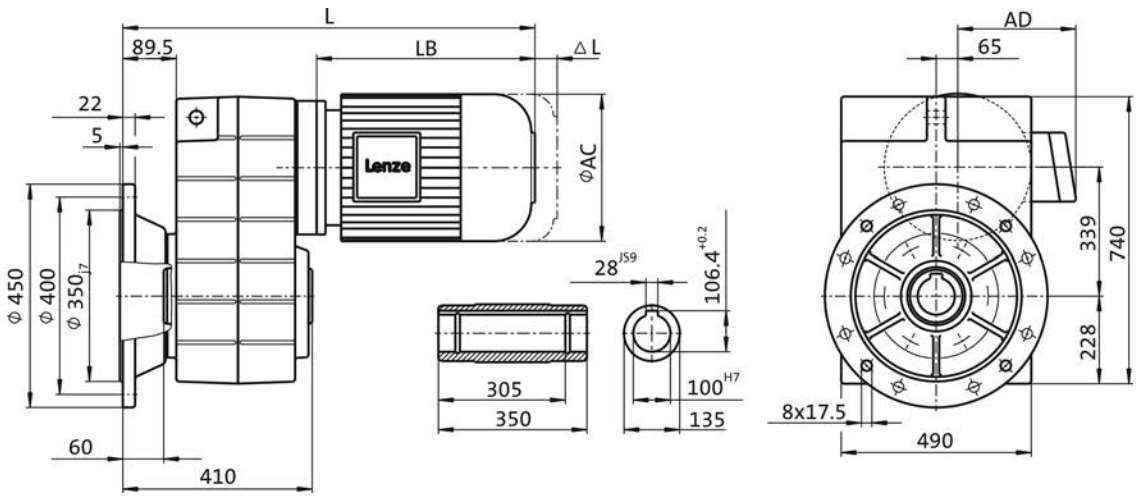

Product			m500								
			-P132L4	-P132M4	-P160L4	-P160M4	-P180L4	-P180M4	-P180V4	-P225L4	-P225M4
Dimensions											
Total length	**L**	**[mm]**	891		951		1006		1054	1176	
Motor length	**LB**	**[mm]**	490		545		600		648	770	
Length of motor options	**Δ L**	**[mm]**	176		291		248			212	
Motor diameter	**AC**	**[mm]**	258		310		281			456	
Distance motor/connection	**AD**	**[mm]**	182		231		282			330	

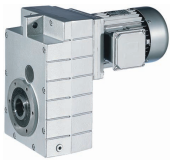

Dimensions, 4-pole motors

GFL14, 2-stage gearboxes

Dimensions with solid shaft (VDR)
Dimensions with hollow shaft and centering (VCR)

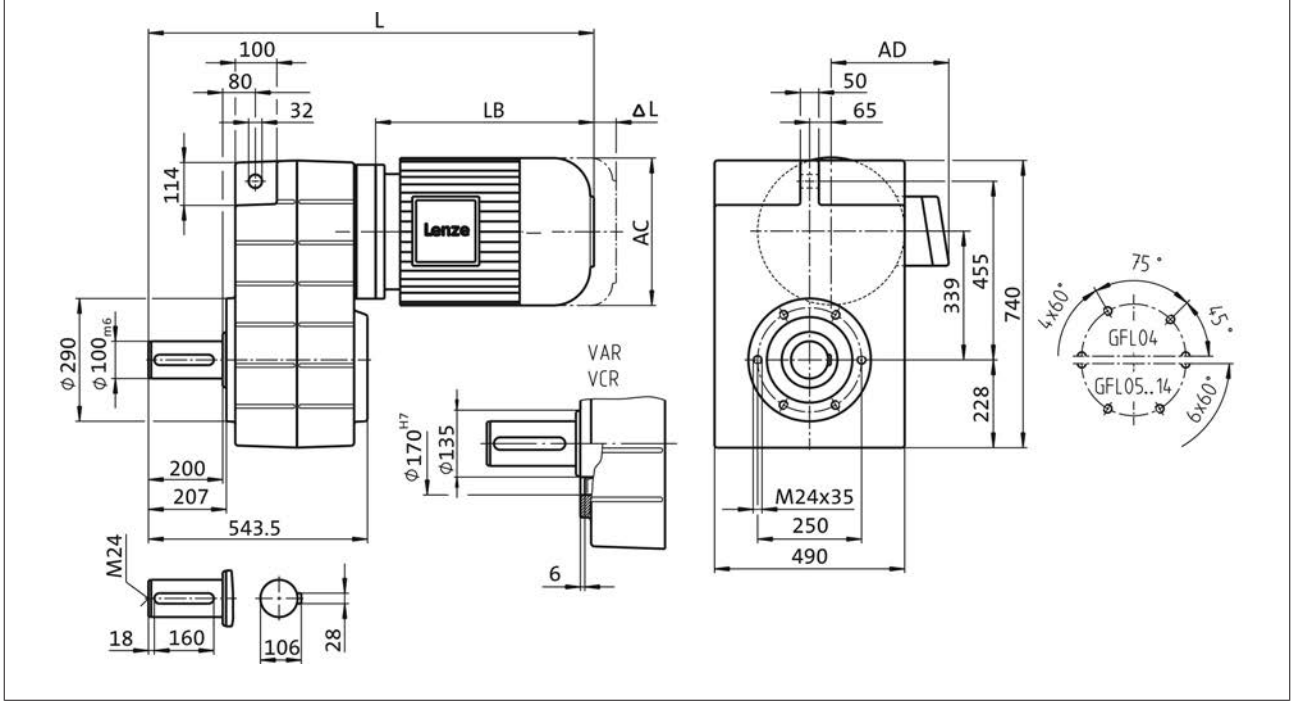

Product			m500								
			-P132L4	-P132M4	-P160L4	-P160M4	-P180L4	-P180M4	-P180V4	-P225L4	-P225M4
Dimensions											
Total length	**L**	**[mm]**	1031		1091		1146		1194	1316	
Motor length	**LB**	**[mm]**	490		545		600		648	770	
Length of motor options	**Δ L**	**[mm]**	176		291		248			212	
Motor diameter	**AC**	**[mm]**	258		310		281			456	
Distance motor/connection	**AD**	**[mm]**	182		231		282			330	

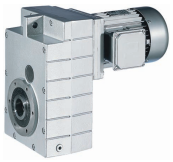

Dimensions, 4-pole motors

GFL14, 2-stage gearboxes

Dimensions with solid shaft and flange (VCK)

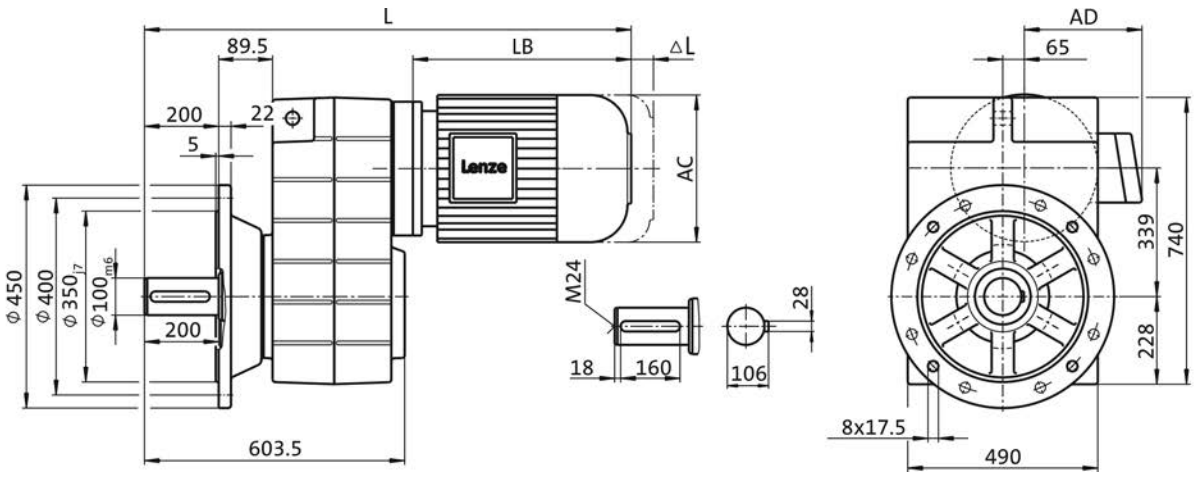

Product			m500								
			-P132L4	-P132M4	-P160L4	-P160M4	-P180L4	-P180M4	-P180V4	-P225L4	-P225M4
Dimensions											
Total length	**L**	**[mm]**	1091		1151		1206		1254	1376	
Motor length	**LB**	**[mm]**	490		545		600		648	770	
Length of motor options	**Δ L**	**[mm]**	176		291		248			212	
Motor diameter	**AC**	**[mm]**	258		310		281			456	
Distance motor/connection	**AD**	**[mm]**	182		231		282			330	

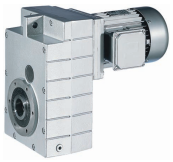

Dimensions, 4-pole motors

GFL14, 3-stage gearboxes

Dimensions with hollow shaft (HDR)
Dimensions with hollow shaft and centering (HCR)

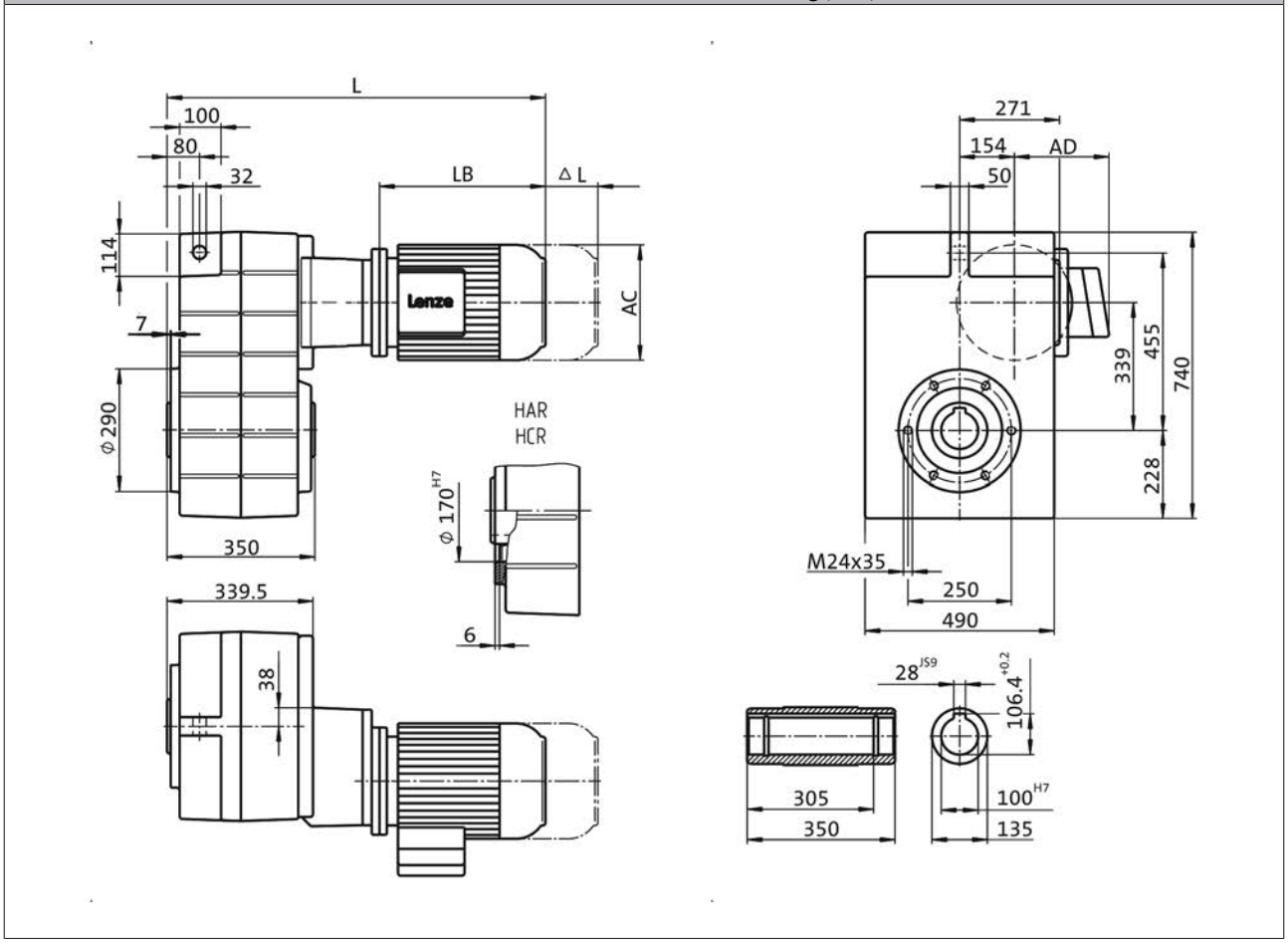

Product			m500			
			-P132L4	-P132M4	-P160L4	-P160M4
Dimensions						
Total length	**L**	**[mm]**	1007		1067	
Motor length	**LB**	**[mm]**	490		545	
Length of motor options	**Δ L**	**[mm]**	176		291	
Motor diameter	**AC**	**[mm]**	258		310	
Distance motor/connection	**AD**	**[mm]**	182		231	

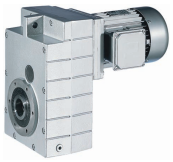

Dimensions, 4-pole motors

GFL14, 3-stage gearboxes

Dimensions with hollow shaft and flange (HCK)

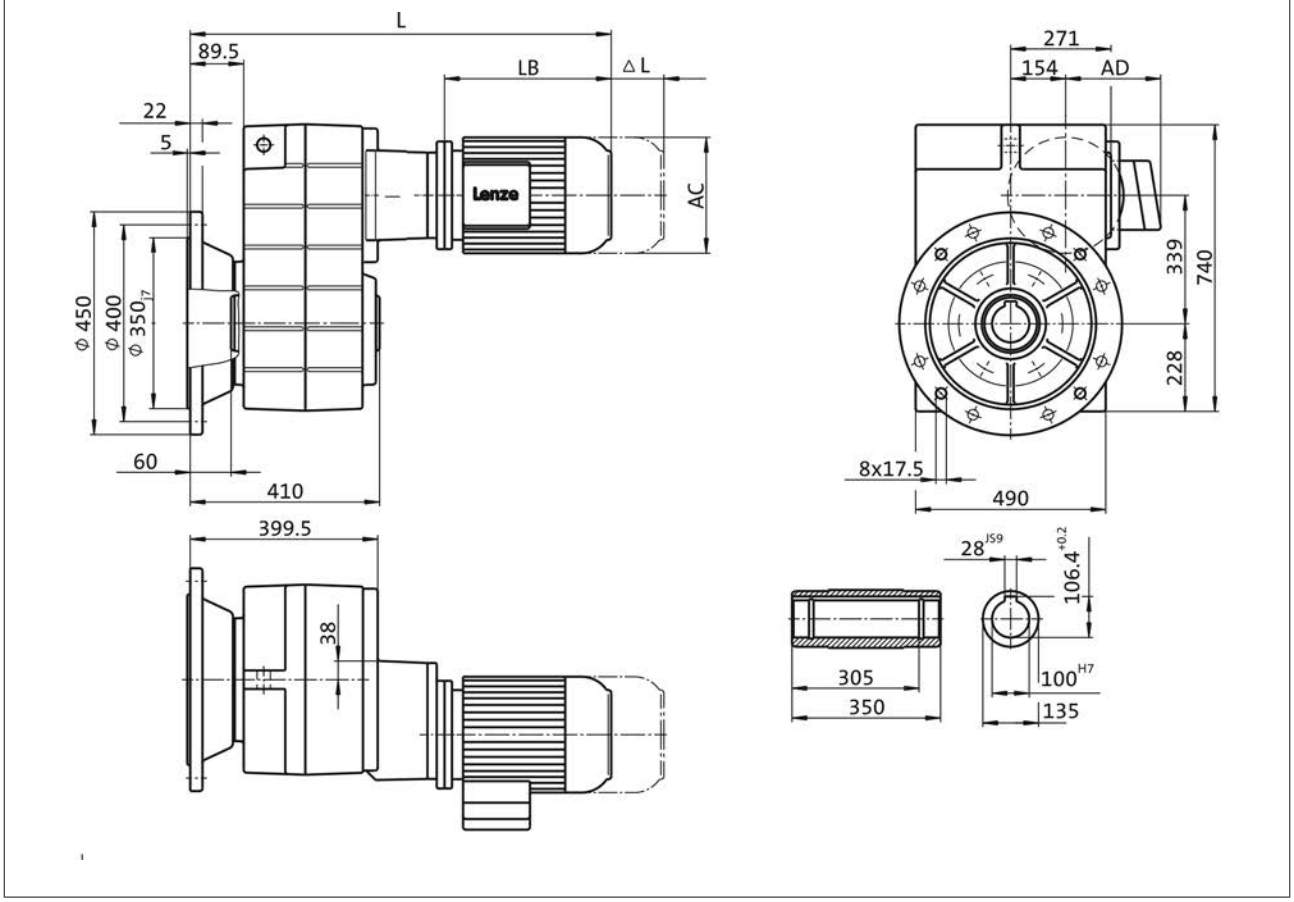

Product			m500			
			-P132L4	-P132M4	-P160L4	-P160M4
Dimensions						
Total length	**L**	**[mm]**	1067		1127	
Motor length	**LB**	**[mm]**	490		545	
Length of motor options	**Δ L**	**[mm]**	176		291	
Motor diameter	**AC**	**[mm]**	258		310	
Distance motor/connection	**AD**	**[mm]**	182		231	

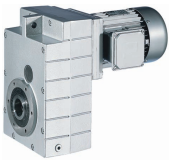

Dimensions, 4-pole motors

GFL14, 3-stage gearboxes

Dimensions with solid shaft (VDR)
Dimensions with hollow shaft and centering (VCR)

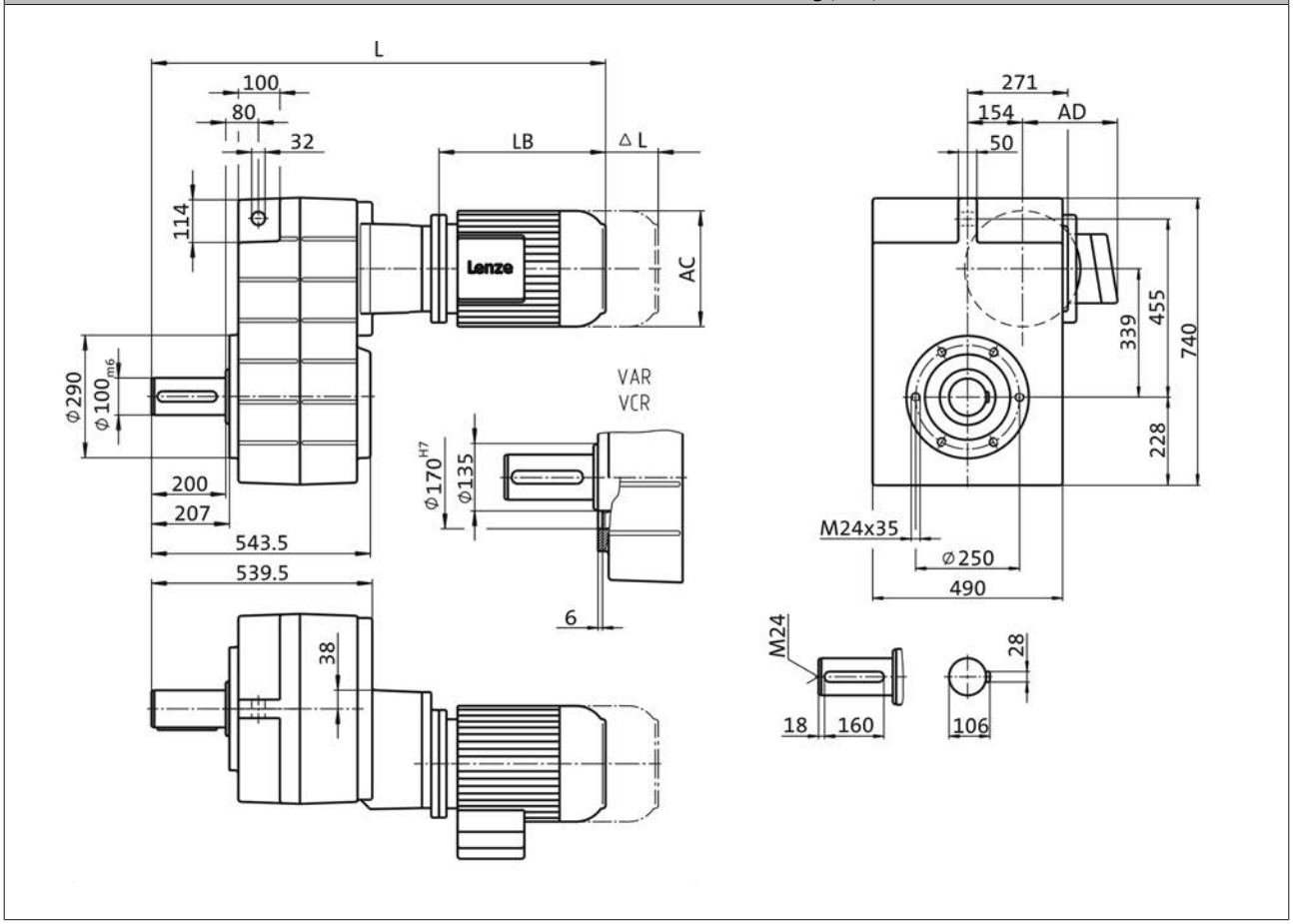

Product			m500			
			-P132L4	-P132M4	-P160L4	-P160M4
Dimensions						
Total length	**L**	**[mm]**	1207		1267	
Motor length	**LB**	**[mm]**	490		545	
Length of motor options	**Δ L**	**[mm]**	176		291	
Motor diameter	**AC**	**[mm]**	258		310	
Distance motor/connection	**AD**	**[mm]**	182		231	

6.2

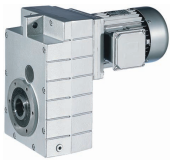

Dimensions, 4-pole motors

GFL14, 3-stage gearboxes

Dimensions with solid shaft and flange (VCK)

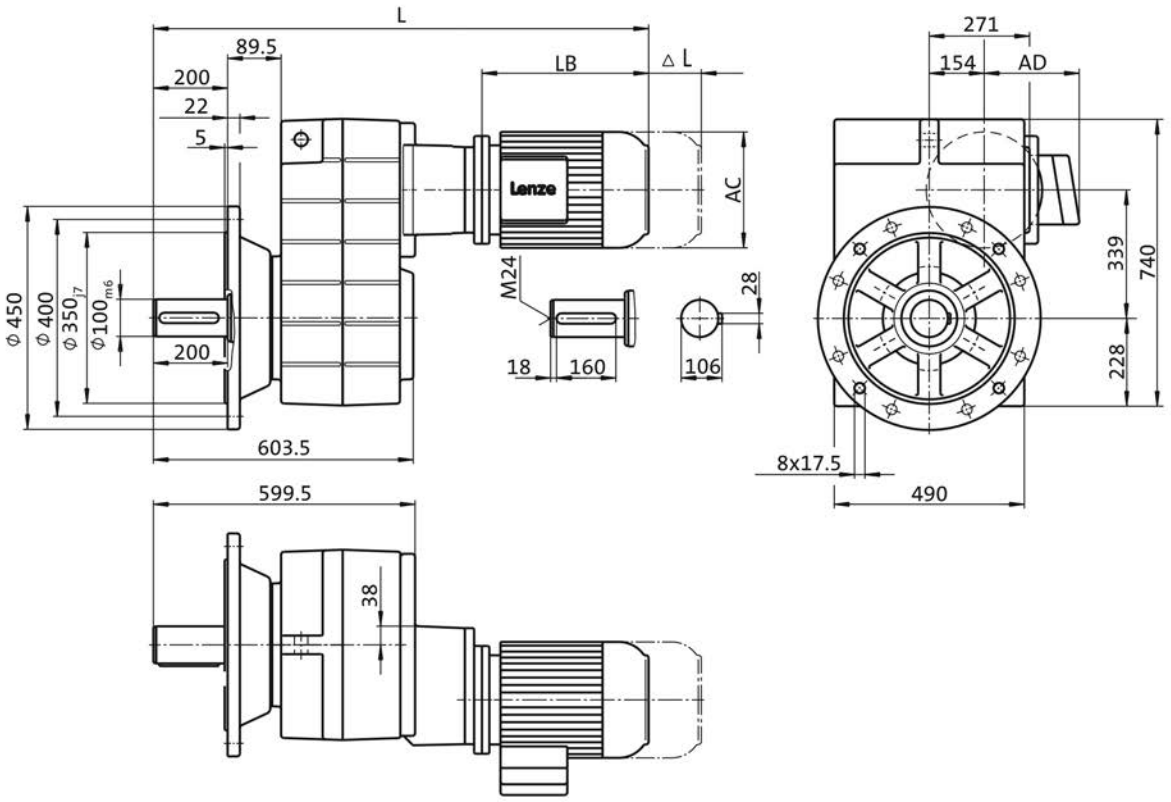

Product			m500			
			-P132L4	-P132M4	-P160L4	-P160M4
Dimensions						
Total length	**L**	**[mm]**	1267		1327	
Motor length	**LB**	**[mm]**	490		545	
Length of motor options	**Δ L**	**[mm]**	176		291	
Motor diameter	**AC**	**[mm]**	258		310	
Distance motor/connection	**AD**	**[mm]**	182		231	

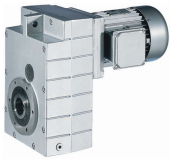

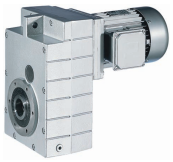

Hollow shaft with shrink disc

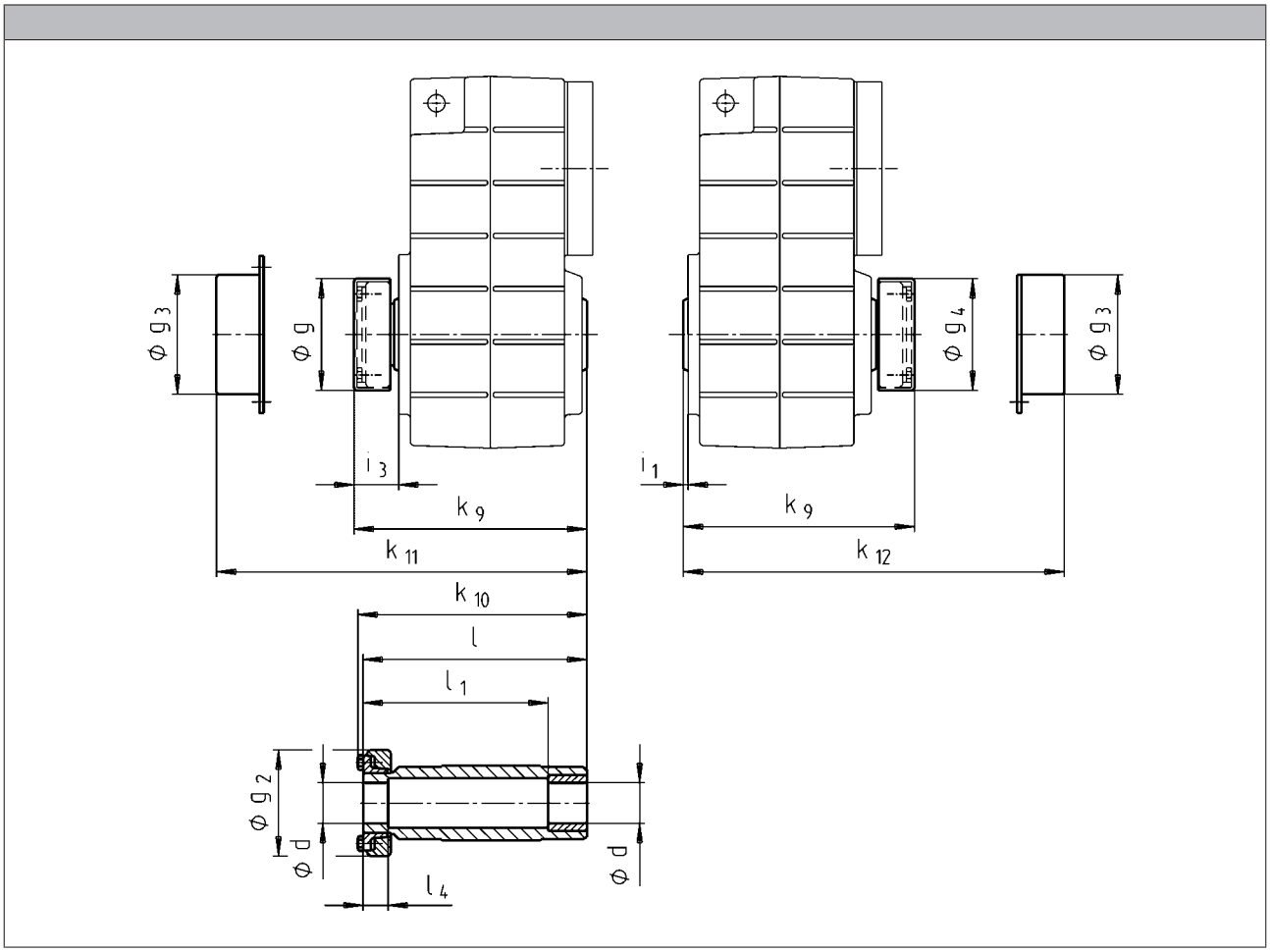

	d [1)]	g_2	g_3	g_4	i_1	k_9	k_{10}	k_{11}	k_{12}	l	l_1	l_4
	h6											
GFL04	25 30	72	79	76	2.5	150	148	154	154	142	122	26
GFL04	25 30	72	79	76	2.5	150	148	154	154	142	122	26
GFL05	35	80	90	84	4.0	176	174	179	180	168	148	28
GFL06	40	90	100	94	5.0	202	200	204	205	194	164	30
GFL07	50	110	124	116	5.0	241	238	244	245	232	192	26
GFL09	65	141	159	147	5.0	288	285	287	288	278	228	30
GFL11	80	170	191	176	6.0	347	344	349	350	338	238	42
GFL14	100	215	253	221	7.0	418	415	421	422	407	307	55

[1)] Machine shaft design.

► Output flange and hollow shaft with shrink disc (design S□K) is only possible with shrink disc in position 1.

► Not suitable for through machine shaft at motor end:
GFL04-2M S□□ 080□□□; d=30
GFL05-2M S□□ 100□□□; d=35
GFL06-2M S□□ 132□□□; d=40
GFL07-2M S□□ 160□□□; d=50
GFL11-2M S□□ 225□□□; d=80

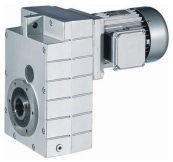

Hollow shaft with shrink disc

► Ensure that the strength of the machine shaft material is adequate in shrink disc designs.
When using typical steels, e.g. C45, 42CrMo4, the torques listed in the selection tables can be used without restriction.
Please consult us if you wish to use material that is considerably weaker. Medium surface roughness Rz must not exceed 15 µm (turning is sufficient).

Combination options with shrink disc in position 1 (drive end)

GFL□□-2M

Gearbox	Motor frame size
GFL04	
GFL05	063 [1)] 071 [1)]
GFL06	063 071 080 090 [1)] 100 [1)]
GFL07	080 090 100 112 [1)]
GFL09	090 100 112 132
GFL11	100 112 132 160 180 225
GFL14	112 132 160 180 225

[1)] Only possible without cover

► For geared motors GFL□□-2M/E S... with shrink disc position 1: terminal box position / motec position 4 not possible!

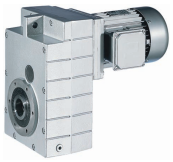

Mounting set for hollow shaft circlip:
Proposed design for auxiliary tools

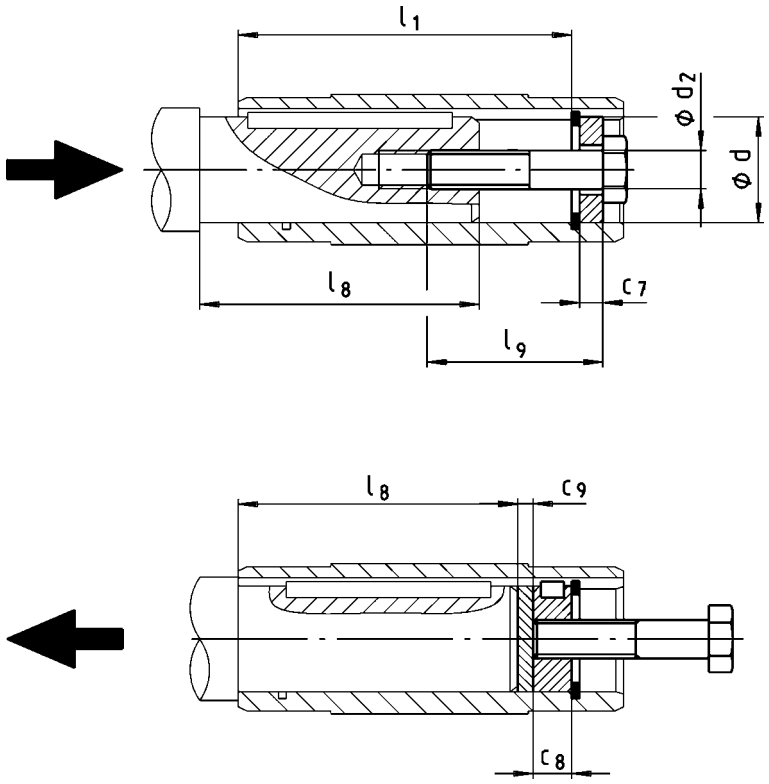

	d	l_1	d_2	l_9	c_7	c_8	c_9	$l_{8,\,max}$
	H7							
GFL04	25 30	100	M10	40	5	10	3	85
					6			
GFL05	30 35	124						107
			M12	50	7	12		
GFL06	40 45	140	M16	60	8	16	4	118
					9			
GFL07	50 55	175			10		5	148
			M20	80	11	20		
GFL09	60 70	210			13			182
					14			
GFL11	70 80	250					6	221
					16			
GFL14	100	305	M24	100	20	24	8	270

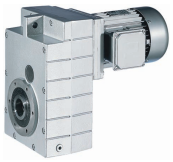

Foot mounting in position 3

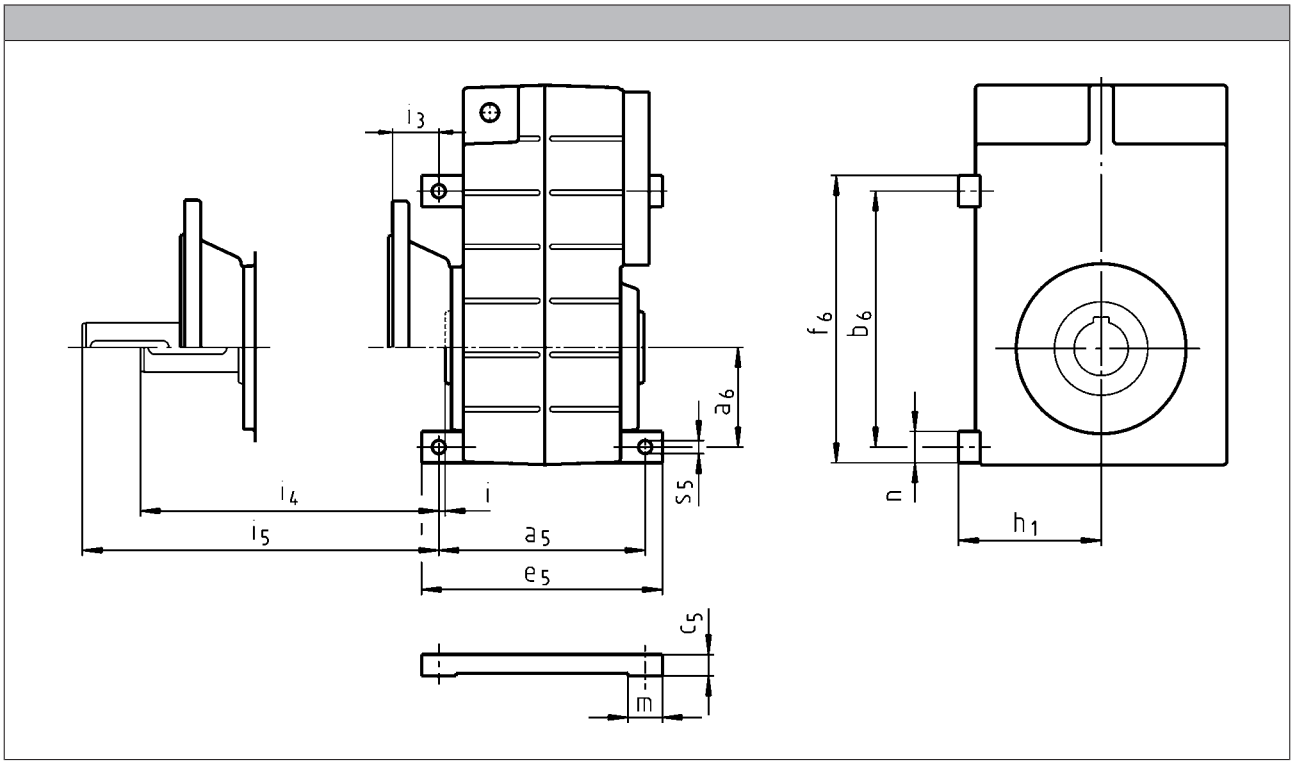

	a_5	a_6	b_6	c_5	e_5	f_6	h_1	i	i_3	i_4	i_5	m	n	s_5
GFL04	130	47	115	18	152	140	90	4.5	28.5	45.5	78.5	22	25	6.6
GFL05	160	65	167	21	185	192	100	2.0	31.0	58.0	91.0	25		9.0
GFL06	175	80	205	27	205	233	125		39.0	78.0	119	30	28	11.0
GFL07	220	100	260	31	255	292	155	3.0	52.0	97.0	152	35	32	13.5
GFL09	260	125	335	36	300	375	190		57.0	117	177	40	40	17.5
GFL11	315	155	435	48	365	485	240			157	217	50	50	22.0
GFL14	375	200	540	57	430	600	295			197	257	55	60	26.0

Foot design is not available for the following combinations:
- GFL04: Motor frame size 090
- GFL05: Motor frame size 090
- GFL05: Motor frame size 100
- GFL06: Motor frame size 112
- GFL06: Motor frame size 132
- GFL07: Motor frame size 160

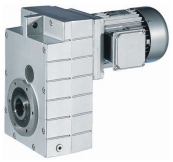

Foot mounting in position 4

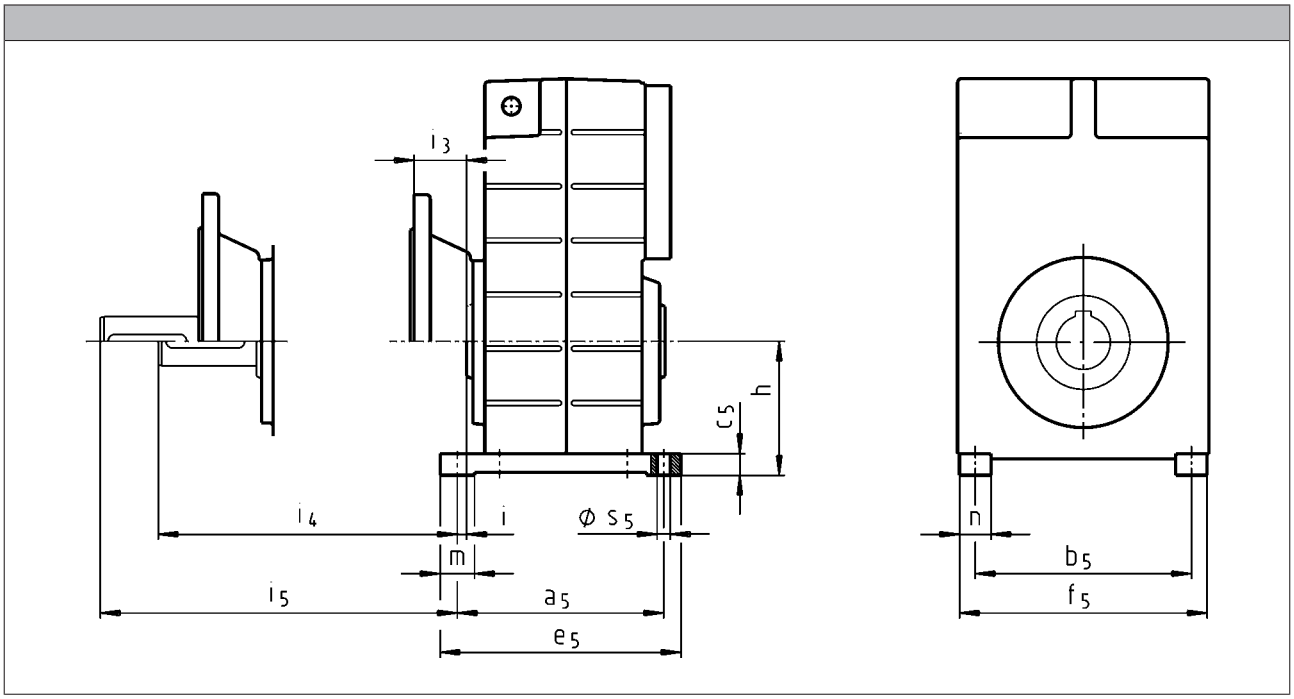

	a_5	b_5	c_5	e_5	f_5	h	i	i_3	i_4	i_5	m	n	s_5
GFL04	130	108	18	152	133.0	85	4.5	28.5	45.5	78.5	22	25	6.6
GFL05	160	140	21	185	165.0	95	2.0	31.0	58.0	91.0	25		9.0
GFL06	175	175	27	205	203.0	120		39.0	78.0	119	30	28	11.0
GFL07	220	220	31	255	252.0	145	3.0	52.0	97.0	152	35	32	13.5
GFL09	260	275	36	300	315.0	180		57.0	117	177	40	40	17.5
GFL11	315	340	48	365	390.0	224			157	217	50	50	22.0
GFL14	375	425	57	430	485.0	278			197	257	55	60	26.0

► In mounting positions E and F, the oil check bore hole/oil-sight glass are located between the feet in position 4!

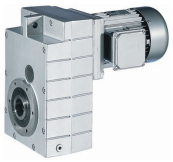

Rubber buffer for torque plate

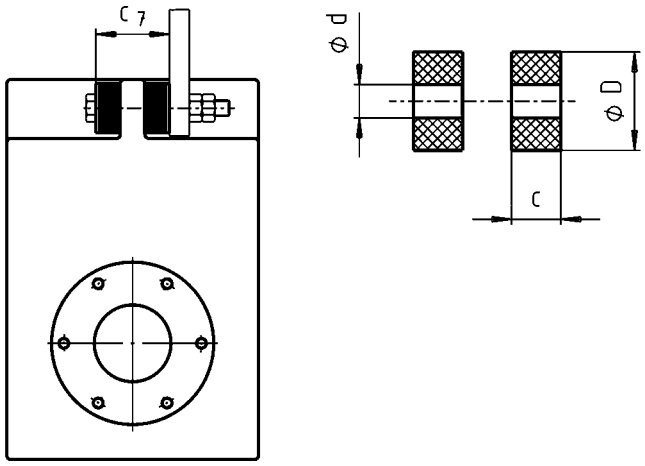

	d	D	c	c_7
GFL04	11	30	14.5	43
GFL05	11	30	14.5	45
GFL06	13	40	15.0	50
GFL07	17	50	27.0	79
GFL09	21	60	28.0	88
GFL11	26	72	29.0	98
GFL14	33	92	30.0	110

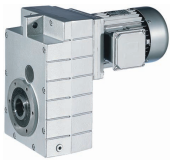

Ventilations

Position of ventilation, sealing elements and oil level check

GFL05...14-2

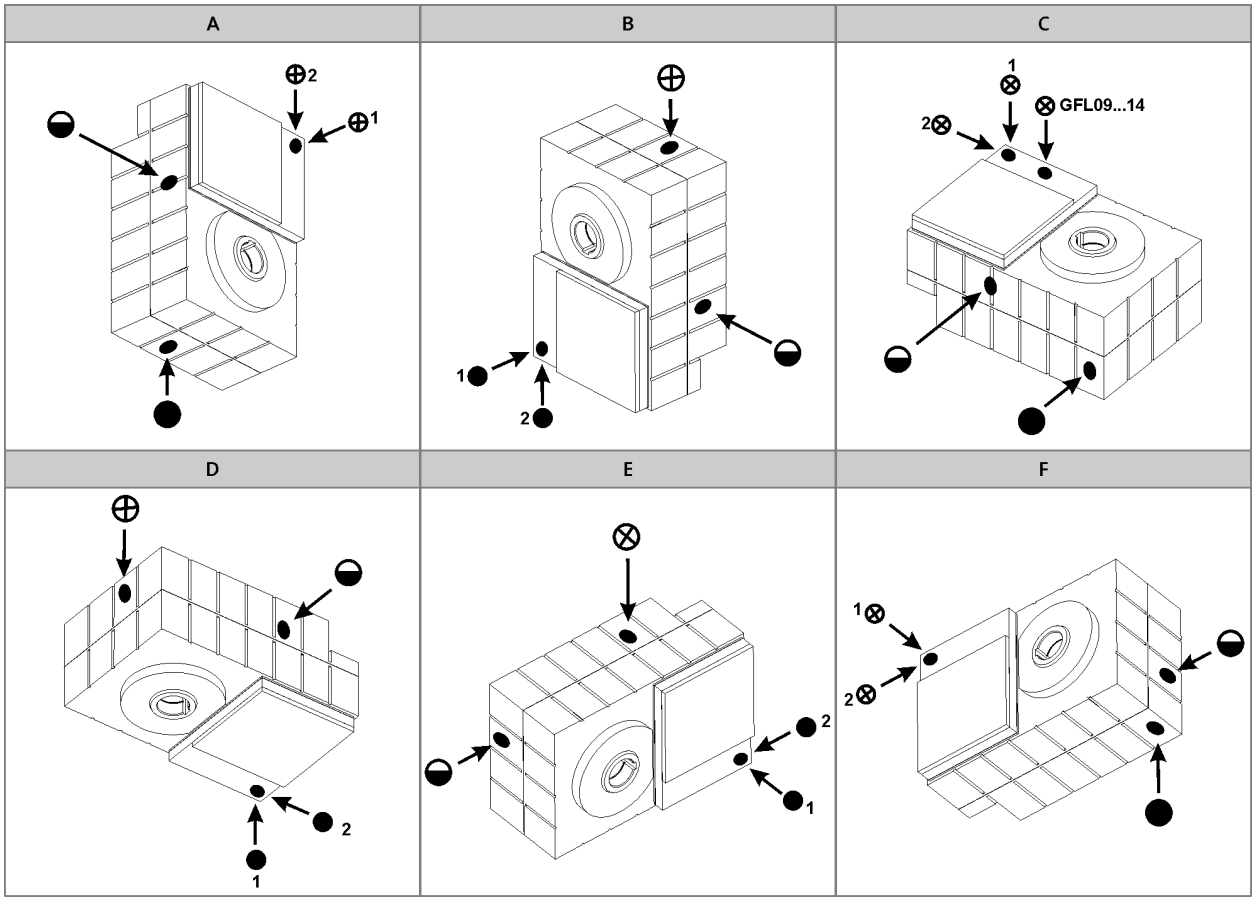

A to F Mounting position
⊗ Ventilation / Oil filler plug
● Oil drain plug
◒ Oil control plug
* On both sides
** On opposite side

Pos.1 standard
Pos.2 only for:
- GFL05-2M □□□ 090□□□
- GFL05-2M □□□ 100□□□
- GFL06-2M □□□ 112□□□
- GFL07-2M □□□ 160□□□

6.2

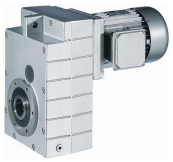

Ventilations

Position of ventilation, sealing elements and oil level check

GFL05...14-3

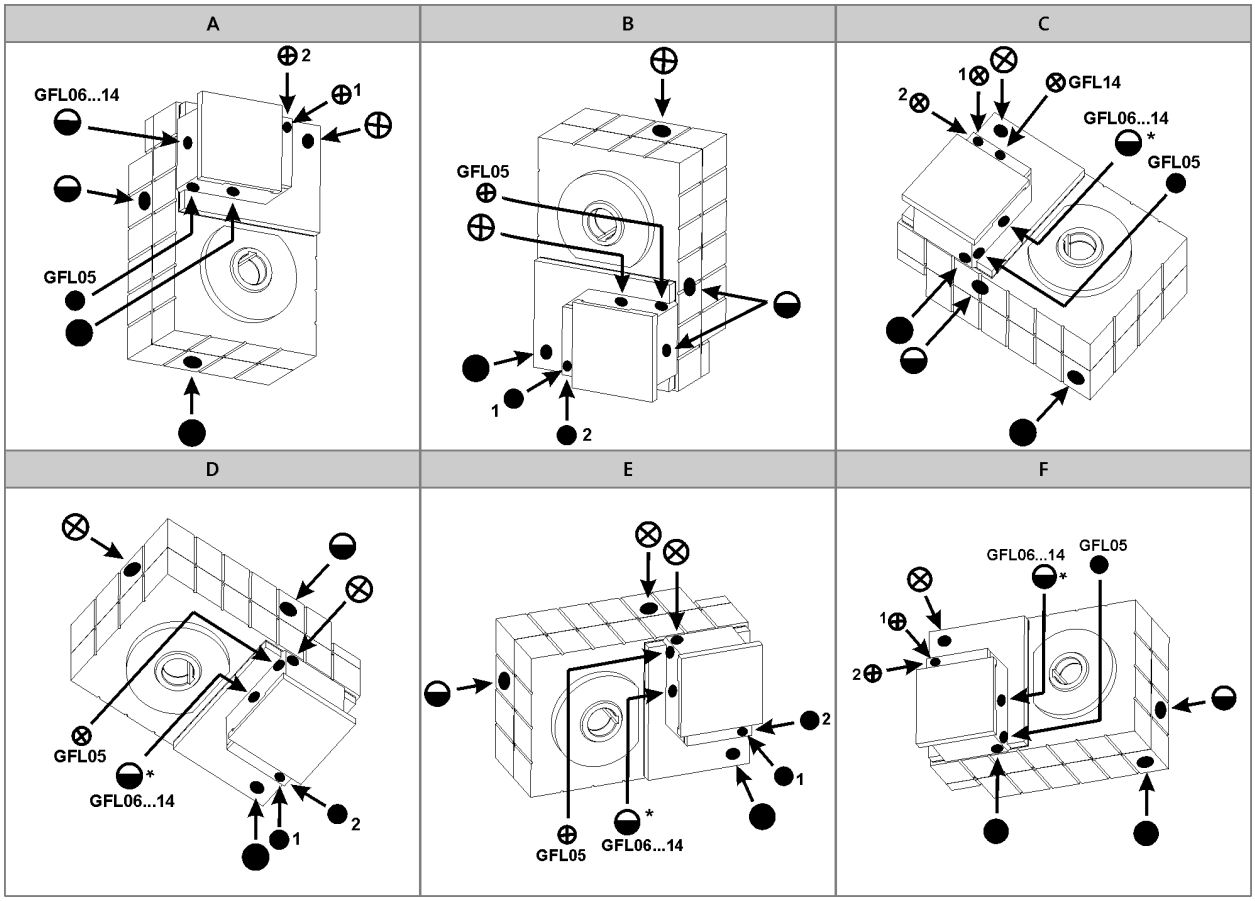

A to F Mounting position
⊗ Ventilation / Oil filler plug
● Oil drain plug
◒ Oil control plug
* On both sides
** On opposite side

Pos.1 standard
Pos.2 only for:
- GFL07-3M □□□ 090□□□
- GFL07-3M □□□ 100□□□
- GFL09-3M □□□ 112□□□

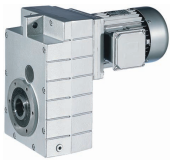

Ventilations

Compensation reservoir for mounting position C

GFL□□-2

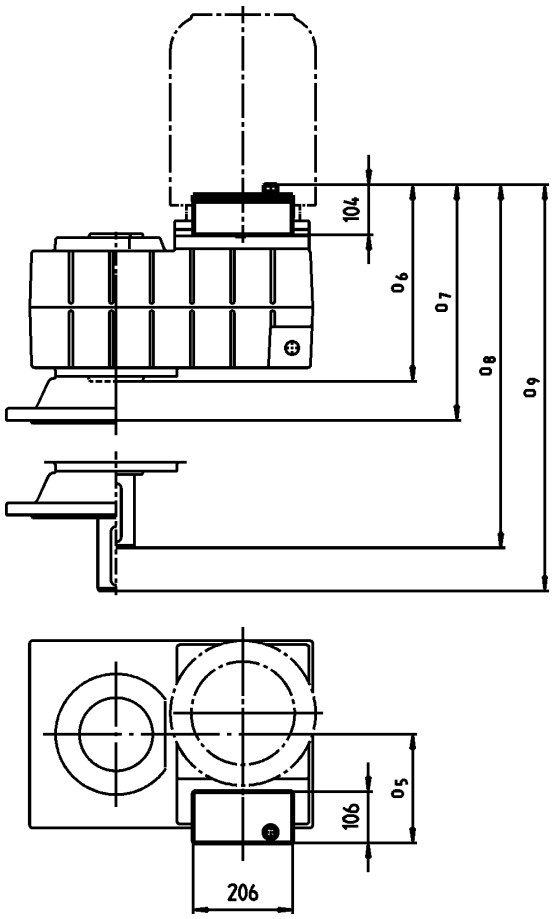

Motor	090 100					112				
	o_5	o_6	o_7	o_8	o_9	o_5	o_6	o_7	o_8	o_9
	[mm]	[mm]	[mm]	[mm]	[mm]	[mm]	[mm]	[mm]	[mm]	[mm]
GFL09	165	344	405	464	525	187	344	405	464	525
GFL11	154	387	448	547	608	176	391	452	551	612
GFL14						181	446	507	646	707

Motor	132					160 180 225				
	o_5	o_6	o_7	o_8	o_9	o_5	o_6	o_7	o_8	o_9
	[mm]	[mm]	[mm]	[mm]	[mm]	[mm]	[mm]	[mm]	[mm]	[mm]
GFL09	204	344	405	464	525	219	344	405	464	525
GFL11	200	391	452	551	612	214	391	452	551	612
GFL14	211	446	507	646	707	211	446	507	646	707

- Terminal box position 3 not permitted.
- Foot in position 3 not permitted.

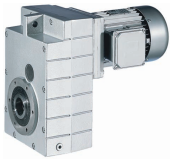

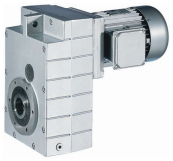

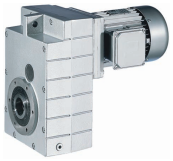

GKS helical-bevel gearboxes

Inverter operation
5.5 ... 45 kW (efficiency class IE3)

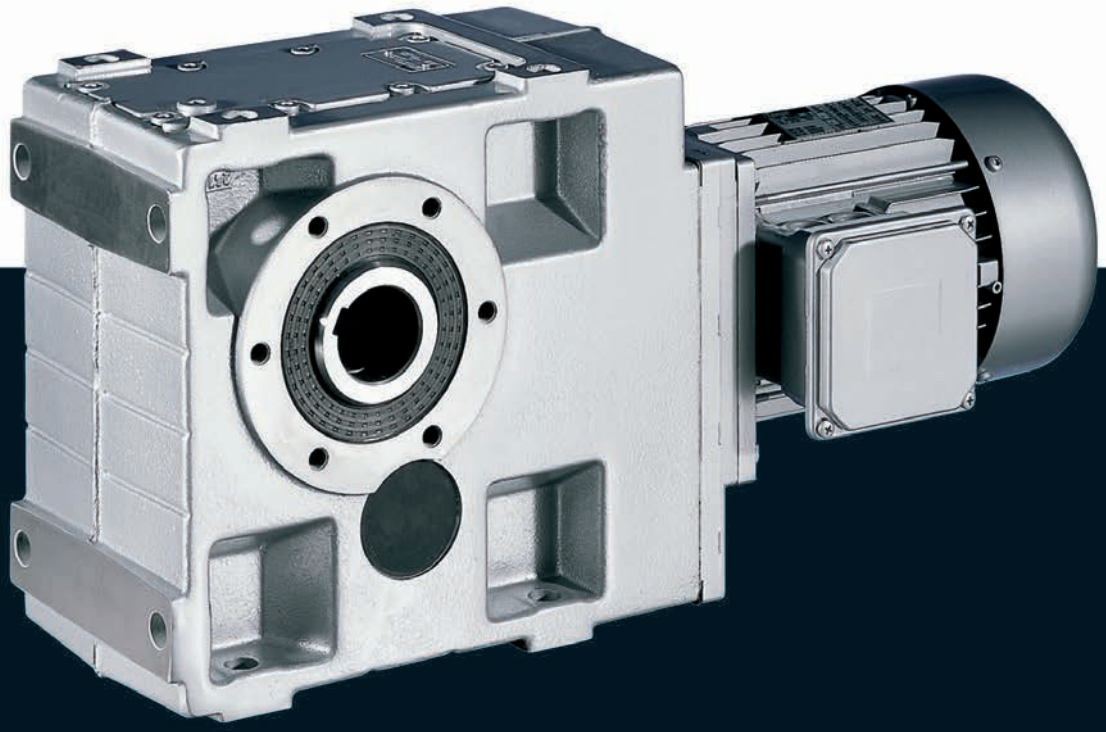

GKS helical-bevel gearbox



Contents

General information	List of abbreviations	6.4 - 4
	Product key	6.4 - 5
	Product information	6.4 - 7
	Functions and features	6.4 - 8
	Dimensioning	6.4 - 13
	Notes on ordering	6.4 - 18
	Ordering details checklist	6.4 - 19
Technical data	Permissible radial and axial forces at output	6.4 - 23
	Output backlash in angular minutes	6.4 - 27
	Moments of inertia	6.4 - 28
	Weights, 4-pole motors	6.4 - 35
	Additional weights for gearboxes	6.4 - 36
	Selection tables, 4-pole motors	6.4 - 37
	Dimensions, 4-pole motors	6.4 - 48
Accessories	Hollow shaft with shrink disc	6.4 - 81
	Mounting set for hollow shaft circlip: Proposed design for auxiliary tools	6.4 - 82
	Hoseproof hollow shaft cover	6.4 - 83
	Gearboxes with 2nd output shaft end	6.4 - 84
	Torque plate on threaded pitch circle	6.4 - 85
	Torque plate at housing foot	6.4 - 86
	Ventilations	6.4 - 87



List of abbreviations

$\eta_{c=1}$		Efficiency
c		Load capacity
f_N	[Hz]	Rated frequency
$F_{ax,max}$	[N]	Max. axial force
$F_{rad,max}$	[N]	Max. radial force
H_{max}	[m]	Site altitude
i		Ratio
J	[kgcm²]	Moment of inertia
m	[kg]	Mass
M_2	[Nm]	Output torque
n_2	[r/min]	Output speed
n_N	[r/min]	Rated speed
P_N	[kW]	Rated power
$S_{hü}$	[1/h]	Transition operating frequency
$T_{opr,max}$	[°C]	Max. ambient operating temperature
$T_{opr,min}$	[°C]	Min. ambient operating temperature
$U_{N,\Delta}$	[V]	Rated voltage
$U_{N,Y}$	[V]	Rated voltage

CE	Communauté Européenne
CSA	Canadian Standards Association
DIN	Deutsches Institut für Normung e.V.
EMC	Electromagnetic compatibility
EN	European standard
IEC	International Electrotechnical Commission
IM	International Mounting Code
IP	International Protection Code
NEMA	National Electrical Manufacturers Association
UL	Underwriters Laboratory Listed Product
UR	Underwriters Laboratory Recognized Product
VDE	Verband deutscher Elektrotechniker (Association of German Electrical Engineers)
CCC	China Compulsory Certificate
GOST	Certificate for Russian Federation
cURus	Combined certification marks of UL for the USA and Canada
UkrSEPRO	Certificate for Ukraine



Product key

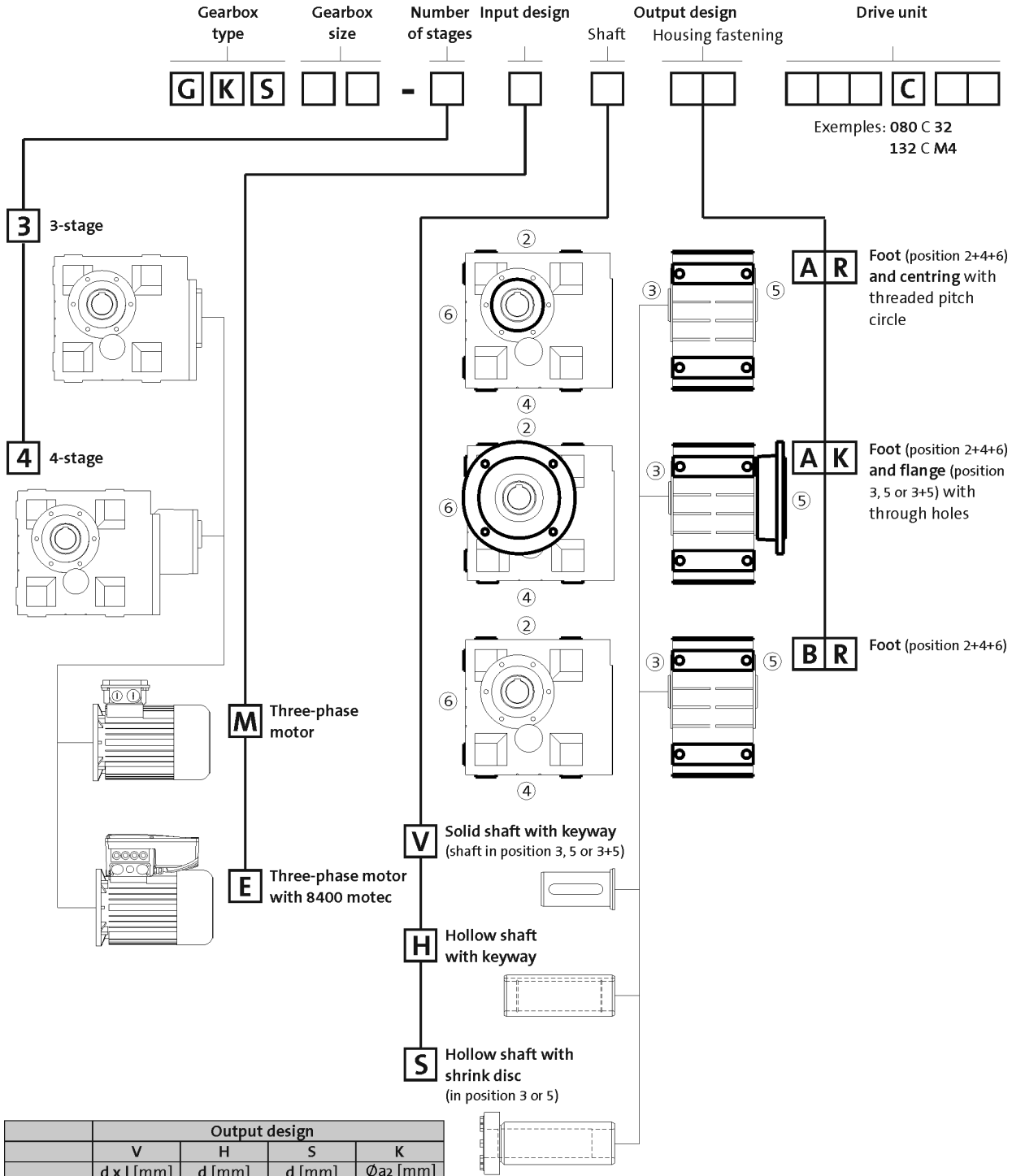

	Output design			
	V	H	S	K
	d x l [mm]	d [mm]	d [mm]	Øa2 [mm]
GKS04-3	25x50	25/30	25/30	160
GKS05-3/4	30x60	30/35	35	200
GKS06-3/4	40x80	40/45	40	200[1]/250
GKS07-3/4	50x100	50/55	50	250/300
GKS09-3/4	60x120	60/70	65	350
GKS11-3/4	80x160	70/80	80	400/450
GKS14-3/4	100x200	100	100	450

[1] Only in the case of H and S type of output



Product key

Mounting position (A to F) and position of system blocks (1 to 6)

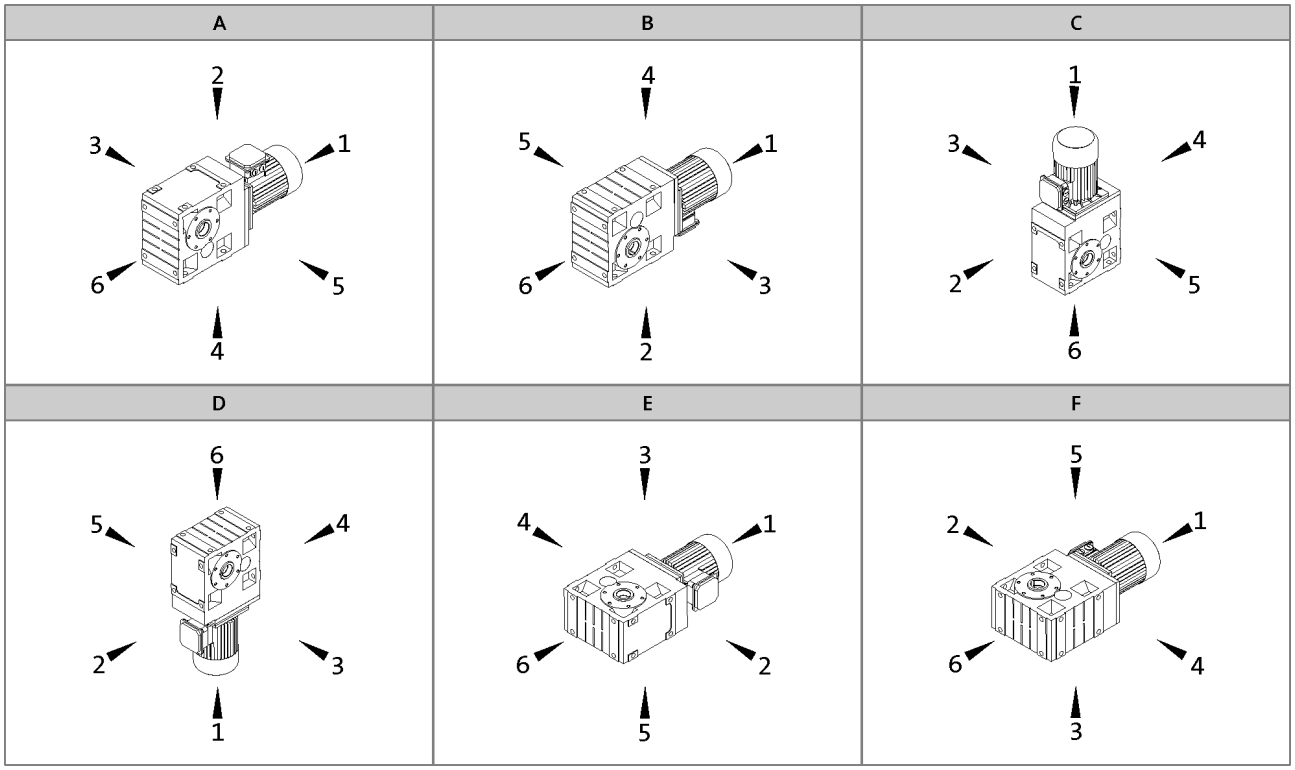

Hollow shaft: 0
Solid shaft: 3, 5, 8 (3+5)
Hollow shaft with shrink disc: 3, 5

Without flange: 0
Flange: 3, 5, 8 (3+5)
Terminal box / motec: 2, 3, 4, 5

Gearbox designs

Basic versions	
Motor efficiency	Standard efficiency Increased efficiency (IE2) Premium efficiency (IE3)
Surface and corrosion protection	OKS-G (primer: grey) OKS-S (paint: RAL 7012)
Lubricant	CLP 460 (mineral)
Ventilation	Oil control plugs for GKS05 to 14 Breather elements for GKS06 ... 14

Options	
Surface and corrosion protection	OKS-S (special paint according to RAL) OKS-M (special paint according to RAL) OKS-L (special paint according to RAL)
Lubricant	CLP HC 320 (synthetic) CLP HC 220 USDA H1 (synthetic)
Shaft sealing rings	Driven shaft: Viton
Ventilation	Breather elements for GKS05 Compensation reservoir for GKS09 to 14-3 in mounting position C
Accessories	Torque plate on threaded pitch circle Housing foot torque plate 2nd output shaft end Shrink disc cover Hoseproof hollow shaft cover Mounting set for hollow shaft circlip
Nameplate	Metal nameplate (supplied loose) Adhesive nameplate (supplied loose)

GKS helical-bevel gearbox

General information



Product information

Lenze provides a geared motor construction kit, which covers a wide range of requirements. Numerous drive-side and output-side options enable precise adaptation of the drive to the specific application. This is the basis for versatile applications and functional scalability of our gearboxes and geared motors.
The modular concept and high power density make extremely compact sizes possible. Optimised teeth profiles and ground gears ensure low-noise operation and low backlash. The gearboxes are of compact and hence space-saving construction.

Types

- 3- and 4-stage gearboxes
- Hollow shaft with keyway or shrink disc
- Solid shaft with keyway
- Foot or flange mounting
- Torque plate, including rubber buffer
- With m500 three-phase AC motors (efficiency class IE3) in the power range 5.5 ... 45 kW

For maximum precision

Helical-bevel gearboxes have the major benefit of enabling extremely precise and reproducible positioning movements owing to their high torsional stiffness and low backlash. Our helical-bevel gearboxes can be combined with three-phase AC motors and servo motors to form a compact unit. They are available in 3- and 4-stage versions with a torque of up to 11,639 Nm and a ratio of up to i=1,936.

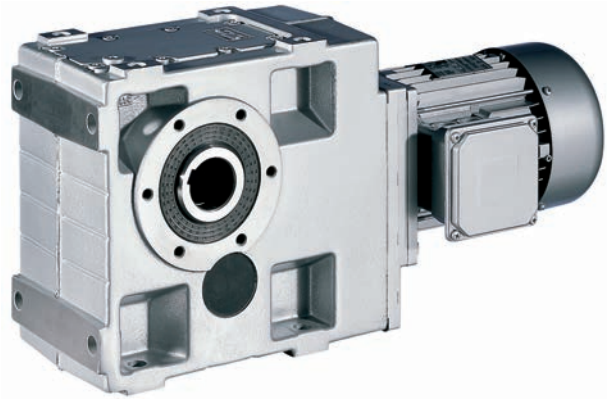



Functions and features

Gearbox type	GKS
Housing	
Design	Cuboid
Material	Aluminium / cast iron
Solid shaft	
Design	with keyway to DIN 6885
Tolerance	k6 (d ≤ 50 mm) m6 (d > 50 mm)
Material	Tempered steel C45 or 42CrMo4
Hollow shaft	
Design	H: with keyway S: smooth
Tolerance	Bore H7
Material	Tempered steel C45
Toothed parts	
Design	Ground tooth flanks Optimised tooth flank geometry
Material	Case-hardened steel
Shaft-hub joint	
	1st stage/prestage/helical (bevel) gearbox: Friction-type connection Output stage (= 2nd, 3rd or 4th stage): Friction-type or positive-fit connection
Shaft sealing rings	
Design	With dust lip
Material	NB / FP
Bearing	
Design	Ball bearing / tapered-roller bearing depending on size and design
Lubricants	
Standard	DIN 51502
Quantities	corresponding to mounting position (see operating instructions)
Mechanical efficiency	
1-stage gearboxes [$\eta_{c=1}$]	
2-stage gearboxes [$\eta_{c=1}$]	
3-stage gearboxes [$\eta_{c=1}$]	0.95
4-stage gearboxes [$\eta_{c=1}$]	0.93
Notes	



Functions and features

Lubricants

Lenze gearboxes and geared motors are ready for operation on delivery and are filled with lubricants specific to both the drive and the design. The mounting position and design specified in the order are key factors in choosing the volume of lubricant.

The lubricants listed in the lubricant table are approved for use in Lenze drives.

Lubricant table

Mode	CLP 460	CLP HC 320	CLP HC 220 USDA H1
Ambient temperature [°C]	0 ... +40	-25 ... +50	-20 ... +40
Specification	Mineral based oil with additives	Synthetic-based oil (synthetic hydrocarbon / poly-alpha-olefin oil)	
Note			For food processing industry
Changing interval	16000 operating hours not later than after three years (oil temperature 70 to 80 °C)	25000 operating hours not later than after three years (oil temperature 70 to 80 °C)	16000 operating hours not later than after three years (oil temperature 70 to 80 °C)
Fuchs	Fuchs Renolin CLP 460	Fuchs Renolin Unisyn CLP 320	bremer & leguil Cassida Fluid GL 220
Klüber	Klüberoil GEM1-460 N	Klübersynth GEM4-320 N	Klüberoil 4 UH1-220 N
Shell	Shell Omala S2 G 460	Shell Omala S4 GX HD 320	

► Please contact your Lenze sales office if you are operating at ambient temperatures in areas up to< -20 °C bzw. > or up to +40°C.



Functions and features

Surface and corrosion protection

For optimum protection of geared motors against ambient conditions, the surface and corrosion protection system (OKS) offers tailor-made solutions.

Various surface coatings combined with other protective measures ensure that the geared motors operate reliably even at high air humidity, in outdoor installations or in the presence of atmospheric impurities. Any colour from the RAL Classic collection can be chosen for the top coat. The geared motors are also available unpainted (no surface and corrosion protection).

Surface and corrosion protection system	Applications	Measures
	Catalogue text	Catalogue text
OKS-G (primed)	• Dependent on subsequent top coat applied	• 2K PUR priming coat (grey) • Zinc-coated screws • Rust-free breather elements Optional measures • Stainless steel nameplate
OKS-S (small)	• Standard applications • Internal installation in heated buildings • Air humidity up to 90%	• Surface coating as per corrosivity category C1 (in line with EN 12944-2) • Zinc-coated screws • Rust-free breather elements Optional measures • Stainless steel nameplate
OKS-M (medium)	• Internal installation in non-heated buildings • Covered, protected external installation • Air humidity up to 95%	• Surface coating as per corrosivity category C2 (in line with EN 12944-2) • Zinc-coated screws • Rust-free breather elements Optional measures • Stainless steel shaft • Stainless steel nameplate • Rust-free shrink disc (on request)
OKS-L (high)	• External installation • Air humidity above 95% • Chemical industry plants • Food industry	• Surface coating as per corrosivity category C3 (in line with EN 12944-2) • Blower cover and B end shield additionally primed • Cable glands with gaskets • Corrosion-resistant brake with cover ring, stainless friction plate, and chrome-plated armature plate (on request) • All screws/screw plugs zinc-coated • Stainless breather elements • Threaded holes that are not used are closed by means of plastic plugs Optional measures • Sealed recesses on motor (on request) • Stainless steel shaft • Stainless steel nameplate • Rust-free shrink disc (on request) • Additional priming coat on cast iron fan • Oil expansion tank and torque plates painted separately and supplied loose



Functions and features

Structure of surface coating

Surface and corrosion protection system	Corrosivity category	Surface coating	Colour
	DIN EN ISO 12944-2	Structure	
Without OKS (uncoated)		Dipping primed gearbox	
OKS-G (primed)		Dipping primed gearbox 2K PUR priming coat	
OKS-S (small)	Comparable to C1	Dipping primed gearbox 2K-PUR top coat	Standard: RAL 7012 Optional: RAL Classic
OKS-M (medium)	Comparable to C2	Dipping primed gearbox 2K PUR priming coat 2K-PUR top coat	Standard: RAL 7012 Optional: RAL Classic
OKS-L (high)	Comparable to C3	Dipping primed gearbox 2K PUR priming coat 2K-PUR top coat	Standard: RAL 7012 Optional: RAL Classic



Functions and features

Ventilation

Non-ventilated gearboxes
No ventilation is required for gearbox GKS04.

Gearboxes that may optionally be equipped with ventilation
Special measures are not usually required when using the GST05 gearbox. In borderline cases, e.g. at input speeds > 2000 r/min, we recommend the use of breather elements, which we can supply if required.

Ventilated gearboxes
Gearboxes GKS06 to 14 are supplied with breather elements as standard.

Special measures for mounting position C (motor on top)
We recommend that an oil compensation reservoir is always used with gearbox sizes G□□09 to 14 in this mounting position. This reservoir can be purchased as an option. For illustrations and measures, please refer to the Accessories chapter.

This is not required at higher ratios or low input speeds. Please contact Lenze for confirmation in this case.



Dimensioning

General information about the data provided in this catalogue

The powers, torques and speeds specified in this catalogue are rounded values and are valid under the following conditions:

- Operating time/day = 8 h (100% OT)
- Duty class I for up to 10 switching operations/h
- Mounting positions and designs in this catalogue
- Standard lubricant
- T_{amb} = 20 °C for gearboxes,
  T_{amb} = 40 °C for motors (in accordance with EN 60034)
- Site altitude < = 1000 m amsl
- The selection tables provide the permissible mechanical powers and torques. For notes on the thermal power limit, see chapter drive dimensioning.
- The rated power specified for motors and geared motors applies to operating mode S1 (in accordance with EN 60034).

Under different operating conditions, the values obtained may vary from those listed here.
In the case of extreme operating conditions, please consult your Lenze sales office.



Dimensioning

Thermal power limit

The thermal power limit, defined by the heat balance, limits the permissible gearbox continuous power. It may be less than the mechanical power ratings listed in the selection tables.

The thermal power limit is affected by:
- the churning losses in the lubricant. These are determined by the mounting position and the circumferential speed of the gears;
- the load and the speed
- the ambient conditions: temperature, air circulation, input or dissipation via shafts and the foundation

Please consult your Lenze sales office
- if the following input speeds n_1 are exceeded on a continuous basis (continuous is defined as more than 8 h/day):

Motor frame size	Mounting position A, B, E, F	Mounting position C, D
063 ... 100	3000 r/min	3000 r/min
112 ... 132	3000 r/min	1500 r/min
160 ... 225	2000 r/min	1500 r/min

- if the following input speeds n_1 are exceeded:

Motor frame size	Mounting position A, B, E, F	Mounting position C, D
063 ... 100	4000 r/min	3000 r/min
112 ... 132	4000 r/min	2000 r/min
160 ... 225	3000 r/min	1500 r/min

- or if you are using the following gearbox type, size and ratio combinations at an input speed of n_1 > 1500 r/min:

Gearbox type	Gearbox size	Ratio i
GKS helical-bevel gearbox	07, 09, 11, 14	≤ 25

Possible ways of extending the application area

- synthetic lubricant (option)
- shaft sealing rings made from FP material/Viton (option)
- reduction in lubricant quantity
- cooling of the geared motor by means of air convection on the machine/system



Dimensioning

Load capacity and application factor

Load capacity c of gearbox
Rated value for the load capacity of Lenze geared motors.
- c is the ratio of the permissible rated torque of the gearbox to the rated torque supplied by the drive component (e.g. the built-in Lenze motor).
- The value of c must always be greater than the value of the application factor k calculated for the application.

Requierement: c ≥ k

Application factor k (according to DIN 3990)
Takes into account the influence of temporally variable loads which are actually present during the anticipated operating time of gearboxes and geared motors.
k is determined by:
- the type of load
- the load intensity
- temporal influences

Duty class	Load type	Intensity	
I	Smooth operation, small or light jolts	$F_I \leq 1.25$	$F_I = \frac{\frac{J_L}{i^2} + J_M + J_B + J_Z}{J_M + J_B + J_Z}$
II	Uneven operation, average jolts	$1.25 < F_I \leq 4$	
III	Uneven operation, severe jolts and/or alternating load	$F_I > 4$	

J_L= moment of inertia of the load
i = gearbox ratio
J_M= moment of inertia of the motor
J_B= moment of inertia of the motor brake
J_Z= moment of inertia of additional built-on motor accessories

Application factor (inverter operation)

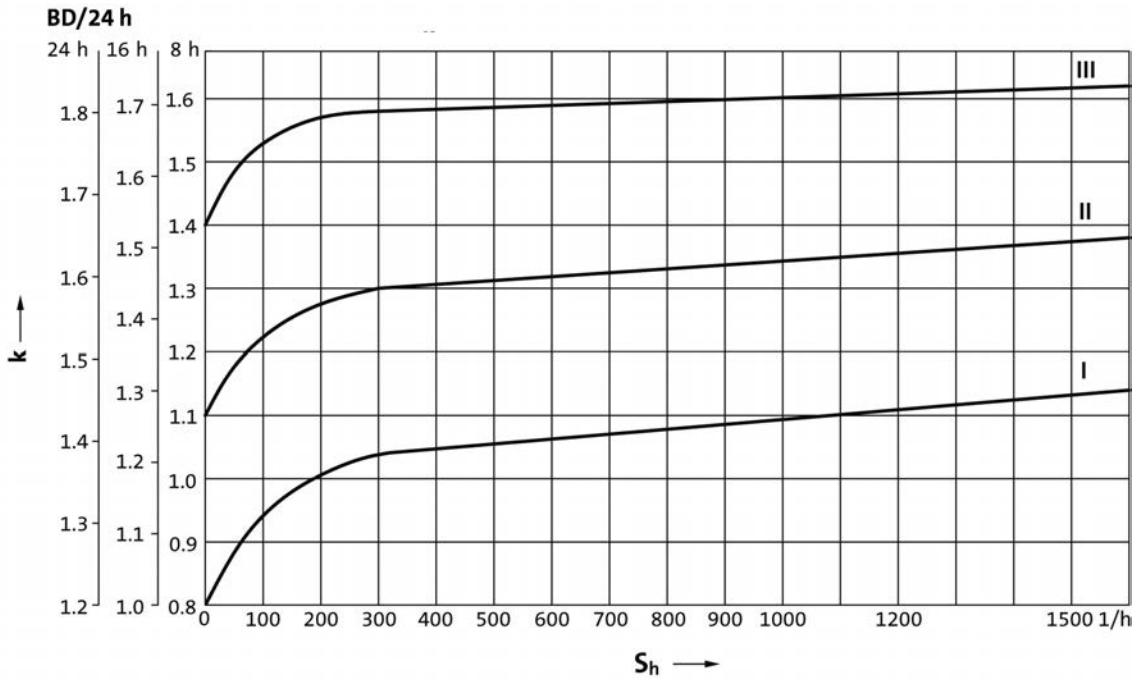

S_h= switching operations/hour



Dimensioning

Torque derating at low motor frequencies

During operation with the rated torque at low speeds (< 20 Hz), the integral fan does not rotate fast enough anymore to ensure sufficient cooling of the motor. In order to prevent overheating, operation without a blower requires a torque reduction of the motor.
The blower cools the motor steadily and irrespective of the motor speed. A torque reduction is not required and the motor can be actuated with its rated torque from 5 Hz to the rated frequency.

The diagram shows the motor frame size-dependent torque reduction for self-ventilated motors, taking the thermal behaviour during actuation of the inverter into consideration.

Torque characteristics

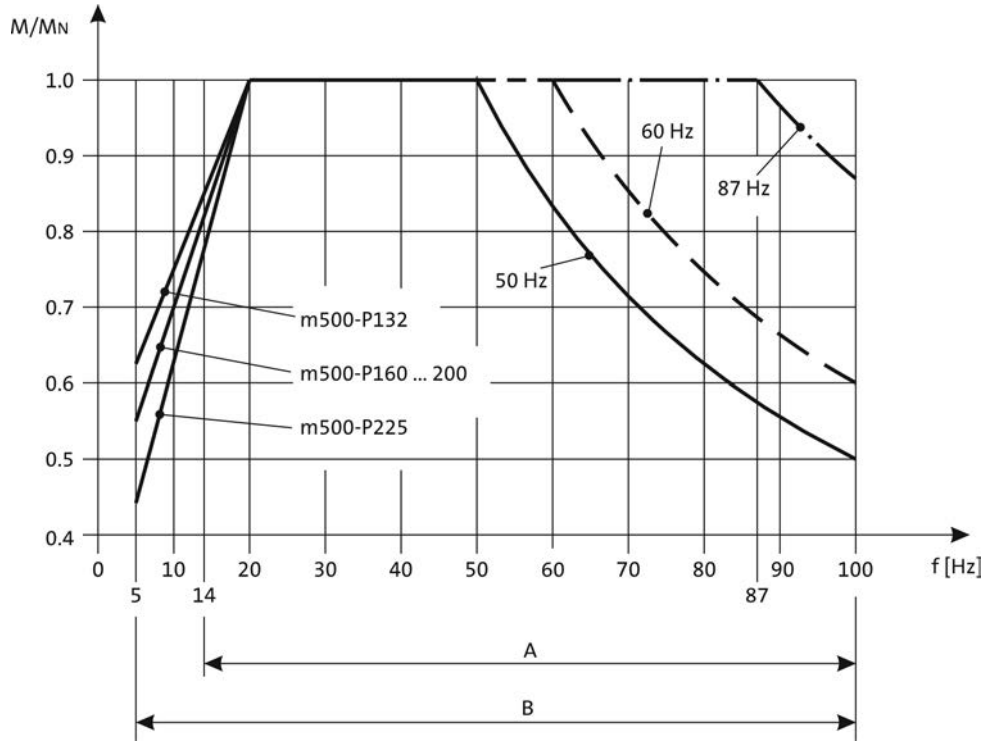

A = Operation with integral fan and brake
B = Operation with integral fan and brake control "Holding current reduction"

You can use the Drive Solution Designer for precise drive dimensioning.

The Drive Solution Designer helps you to carry out a fast and high-quality drive dimensioning.
The software includes well-founded and proven knowledge on drive applications and electro-mechanical drive components.

Please contact your Lenze sales office.



Dimensioning

Notes on the selection tables

The selection tables show the available combinations of gearbox type, number of stages, ratio and motor. They are used only to provide basic orientation.
The following legend indicates the structure of the selection tables.

Rated power Prated of the drive motor depending on the rated frequency

50 Hz: P_N = 5.5 kW
87 Hz: P_N = 9.6 kW

3-stufige Getriebe ← **Number of the gear stage of the gearbox**

Torque diagram

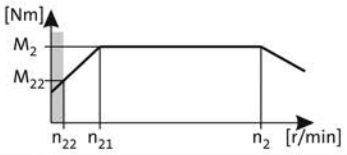

Mains operation 400 V, 50 Hz			Inverter operation 5 Hz -		- 20 Hz		- 50 Hz (1:10)			- 87 Hz (1:17.4)			i	Product		
n_2 [r/min]	M_2 [Nm]	c	n_{22} [r/min]	M_{22} [Nm]	n_{21} [r/min]	M_2 [Nm]	n_2 [r/min]	M_2 [Nm]	c	n_2 [r/min]	M_2 [Nm]	c		GKS	m500	
245	204	2.3	24	126	101	204	245	204	2.3				5.955	GKS07	-P132M4	53
225	222	1.2	22	137	93	222	225	222	1.2	390	224	1.0	6.485	GKS06	-P132M4	49

Product Gearbox
Product Motor
Ratio i
Page number for dimensions

Load capacity c of the gearbox
c is the ratio between the permissible rated torque of the gearbox and the rated torque of the three-phase AC motor (converted to the driven shaft).
c must be always higher than the service factor **k** determined for the application **k**.

$$c = \frac{M_{2,zul}}{M_{1N} \cdot i \cdot \eta_{Getr}} > k$$

Mains operation
Output speed **n2**
Output torque **M2**

Inverter operation
The speed and torque data are valid for self-ventilated and forced ventilated drives. Forced ventilated drives can always output the torque **M2** in the entire setting ranges. In the case of self-ventilated drives, a reduction to **M22** is required in the lower speed range.

The following applies to self-ventilated geared motors:
n22 is the minimum speed where the torque **M22** is permissible, from **n21** to **n2**, the maximum torque is **M2**
The following applies to forced ventilated geared motors:
From the minimum speed **n22** to **n2**, the maximum torque is **M2**

Motor voltages

The power values and torques indicated in the selection tables refer to the following motor voltages:
- 50 Hz : Δ 230 V / Y 400 V
- 87 Hz : 400 V



Notes on ordering

We want to be sure that you receive the correct products in good time.

To allow us to achieve this we need:
- your address and your company data
- our product key for the individual products in this catalogue
- your delivery date and delivery address

Ordering procedure
Please use the ordering information checklist to ensure that you provide all the ordering information required for the various products.

The ordering information checklist, the product key, the basic versions, options, mounting position and position of the system blocks will be found in the General – Product key section.

A list of Lenze's worldwide sales offices can be found on the Internet: www.Lenze.com.



Ordering details checklist

☐ **Offer**

Page __ of __

☐ **Order**

Customer No.

Job No.

Fax No. _____

Sender

Company _____ Made out by (name) _____

Street/P.O. Box _____ Department _____

P.O. Box, City _____ Telephone No. _____

Date _____ Signature _____

Delivery address (if different)

Street/P.O. Box _____ Desired delivery date _____

P.O. Box, City _____ Dispatching notes _____

Invoice recipient (if different)

Street/P.O. Box _____

Postal code, City _____

6.4



Ordering details checklist

Customer No. ☐☐☐☐☐☐☐☐

Job No. ☐☐☐☐☐☐☐☐☐☐

Page __

Quantity ☐☐☐☐

Efficiency class ☐ High efficiency (IE3)

Rated frequency ☐ 50 Hz ☐ 60 Hz ☐ 87 Hz

Ratio i ☐☐☐☐

GKS ☐☐ – ☐ 3 / 4 ☐ M / E ☐ V / H / S ☐ A / B ☐ R / K

Motor frame size ☐☐☐C☐☐

Hollow shaft d = ☐☐☐ mm

Flange a_2 = ☐☐☐ mm

Mounting position A ☐ B ☐ C ☐ D ☐ E ☐ F ☐

Position of system blocks

Shaft/shrink disc				Flange				Terminal box			
0	3	4	8	0	3	5	8	2	3	4	5
☐	☐	☐	☐	☐	☐	☐	☐	☐	☐	☐	☐

Surface and corrosion protection ☐ OKS-S colour: RAL 7012 ☐ OKS-G (primed)

Options

Special lubricants ☐ CLP HC 320 (synthetic) ☐ CLP HC 220 USDA H1 (for the food industry)

Surface and corrosion protection ☐ OKS-S (small) ☐ OKS-M (medium) RAL ☐☐☐☐ ☐ OKS-L (high) ☐ OKS-G (primed)

Accessories ☐ Torque support for housing foot ☐ Torque support for threaded pitch circle ☐ 2nd output shaft end ☐ Mounting set for hollow-shaft circlip ☐ Shrink disc cover ☐ Hollow shaft cover, hoseproof

Shaft sealing rings ☐ Viton

Breathing ☐ Breather elements for GKS05 ☐ Compensation reservoir in mounting position for GKS09 ... 14-3

6.4



Ordering details checklist

Three-phase AC motors options

Customer No. ☐☐☐☐☐☐☐☐

Job No. ☐☐☐☐☐☐☐☐☐☐

Page __

Motor connection

Terminal box

- ☐ with plug-in connector ICN 6-pin. Adhere to permissible rated motor current 20 A!
- ☐ with plug-in connector ICN 8-pin. Adhere to permissible rated motor current 20 A!
- ☐ with plug-in connector HAN10E. Adhere to permissible rated current 16 A!
- ☐ with plug-in connector HAN-Modular. Adhere to permissible rated current 16 / 40 A!

Cable entry — in position 1 ☐ 2 ☐ 3 ☐ 4 ☐ 5 ☐

Blower

☐ 1~ ☐ 3~

☐ Terminal box with plug-in connector ICN

Terminal box position 2 ☐ 3 ☐ 4 ☐ 5 ☐

Spring-applied brake

Brake version ☐ Standard

Brake size ☐

Characteristic torque ☐ Nm

Rated voltage AC ☐ DC ☐ ☐ V

Rectifier — Only in the case of AC supply voltage

- ☐ Half-wave rectifier
- ☐ Bridge rectifier
- ☐ Bridge/half-wave rectifier (overexcitation)
- ☐ Bridge/half-wave rectifier (holding current reduction)

Brake options — Manual release lever in position 2 ☐ 3 ☐ 4 ☐ 5 ☐

☐ Low-noise version (Standard in the case of brake with speed/position encoder)

6.4



Ordering details checklist

Three-phase AC motors options

Customer No. ☐☐☐☐☐☐☐☐

Job No. ☐☐☐☐☐☐☐☐☐☐

Page __

Speed/position encoder

Resolver ☐ RS1

Incremental encoder HTL ☐ IG128-24V-H ☐ IG512-24V-H ☐ IG1024-24V-H ☐ IG2048-24V-H

Incremental encoder TTL ☐ IG512-5V-T ☐ IG1024-5V-T ☐ IG2048-5V-T

Feedback with ICN connector ☐ IG128-24V-H not possible with plug-in connector!

Motor protection

☐ TKO ☐ KTY 83-110 ☐ KTY 84-130

☐ PTC

Further options

☐ 2nd nameplate (adhesive nameplate/metal nameplate)



Permissible radial and axial forces at output

Permissible radial force
$F_{rad,per} = \min(f_w \times f_\alpha \times F_{rad,max}$; $f_w \times F_{rad,max}$ at $n_2 \leq 16$ r/min)

Permissible axial force
$F_{ax,per} = F_{ax,max}$ if $F_{rad} = 0$

If F_{rad} **and** $F_{ax} \neq 0$, please contact your Lenze sales office.

Application of forces

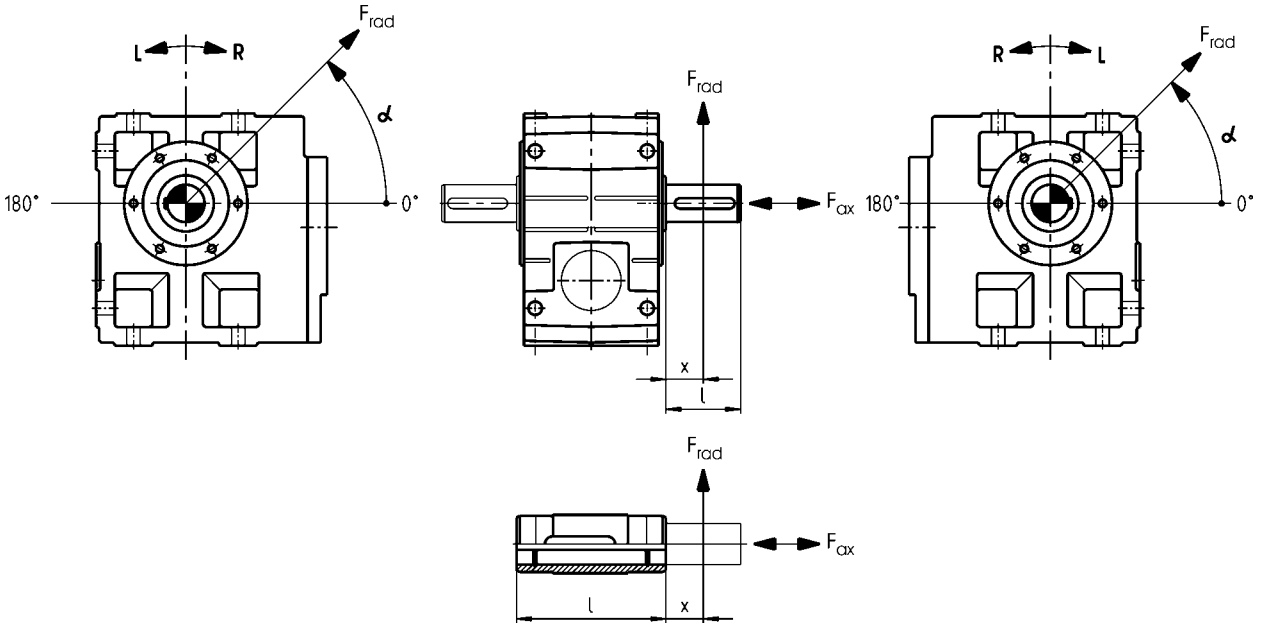

Effective direction factor f_α at output shaft

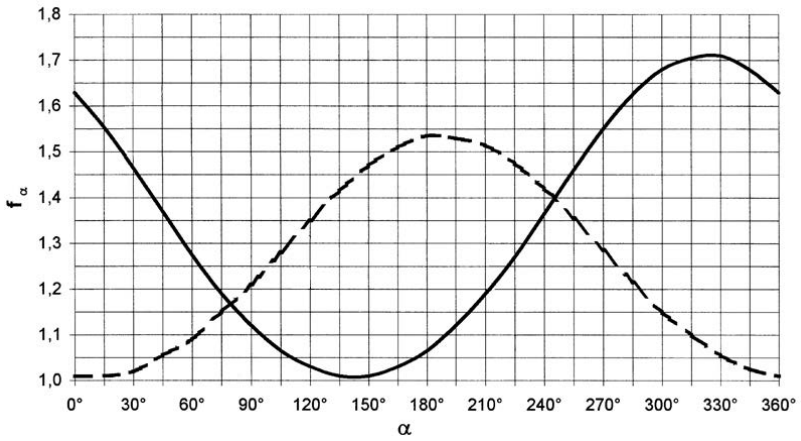

——— Direction of rotation R
— — — Direction of rotation L



Permissible radial and axial forces at output

Additional load factor f_w at output shaft

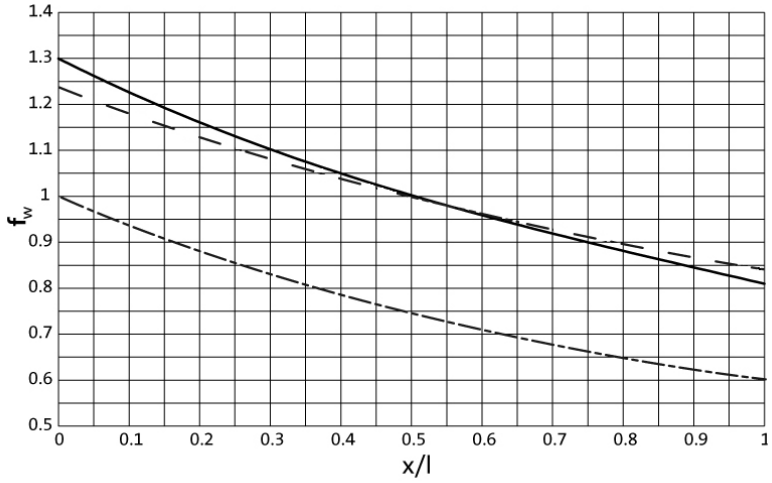

——— Solid shaft (V□□)
— · — Hollow shaft (H□□)
— — — Solid shaft with flange (V□K)

GKS□□-3/4□ H□□

Size	n_2 [r/min]								
Gearbox	630	400	250	160	100	63	40	25	≤16

	Max. radial force, Hollow shaft								
	$F_{rad,max}$	$F_{rad,max}$	$F_{rad,max}$	$F_{rad,max}$	$F_{rad,max}$	$F_{rad,max}$	$F_{rad,max}$	$F_{rad,max}$	$F_{rad,max}$
	[N]	[N]	[N]	[N]	[N]	[N]	[N]	[N]	[N]
GKS04	3100	3900	4500	5100	5900	6800	7000	7000	7000
GKS05	2400	3500	4200	4630	5000	6200	7300	7300	7300
GKS06	3000	4600	5600	6400	7000	8200	10400	12000	12000
GKS07		5400	6300	7400	8700	10500	12500	15100	16000
GKS09		7500	8200	9400	10600	12200	15500	21000	24000
GKS11		9000	10000	11000	14000	16000	18500	25000	30000
GKS14		15000	15500	16500	17500	18500	21000	28000	40000

	Max. axial force, Hollow shaft								
	$F_{ax,max}$	$F_{ax,max}$	$F_{ax,max}$	$F_{ax,max}$	$F_{ax,max}$	$F_{ax,max}$	$F_{ax,max}$	$F_{ax,max}$	$F_{ax,max}$
	[N]	[N]	[N]	[N]	[N]	[N]	[N]	[N]	[N]
GKS04	3300	4200	5000	5500	5500	5500	5500	5500	5500
GKS05	2800	3500	4240	5090	6160	6600	6600	6600	6600
GKS06	3500	4440	5580	6930	8710	10000	10000	10000	10000
GKS07		4900	6230	7820	9940	12600	14000	14000	14000
GKS09		6500	7400	8000	10500	13000	17000	21000	21000
GKS11		7000	8000	9200	12000	14500	18500	27000	27000
GKS14		6000	8000	10000	13000	16000	20000	28000	35000

- Application of force F_{rad}: at hollow shaft end face (x = 0)
- $F_{ax,max}$ only valid with F_{rad} = 0
- Neither radial nor axial forces are permissible for the hollow shaft with shrink disc (S□□).



Permissible radial and axial forces at output

GKS□□-3/4□ V□R

Size	n_2 [r/min]								
Gearbox	630	400	250	160	100	63	40	25	≤16

	Max. radial force, Solid shaft without flange								
	$F_{rad,max}$	$F_{rad,max}$	$F_{rad,max}$	$F_{rad,max}$	$F_{rad,max}$	$F_{rad,max}$	$F_{rad,max}$	$F_{rad,max}$	$F_{rad,max}$
	[N]	[N]	[N]	[N]	[N]	[N]	[N]	[N]	[N]
GKS04	2400	3000	3400	3600	3600	3600	3600	3600	3600
GKS05	2200	2800	3200	3600	4100	4900	5800	5800	5800
GKS06	2700	3700	4300	4900	5300	6200	7900	9000	9000
GKS07		4000	4900	5800	6600	8000	9600	12000	12000
GKS09 [1)]		6200	6400	7100	8400	9500	11800	16000	18000
GKS11 [1)]		7100	7500	8200	10000	11200	13000	19000	23000
GKS14		57900	61000	64100	65000	65000	65000	65000	65000

	Max. axial force, Solid shaft without flange								
	$F_{ax,max}$	$F_{ax,max}$	$F_{ax,max}$	$F_{ax,max}$	$F_{ax,max}$	$F_{ax,max}$	$F_{ax,max}$	$F_{ax,max}$	$F_{ax,max}$
	[N]	[N]	[N]	[N]	[N]	[N]	[N]	[N]	[N]
GKS04	3300	4200	5000	5500	5500	5500	5500	5500	5500
GKS05	2800	3500	4240	5090	6160	6600	6600	6600	6600
GKS06	3500	4440	5580	6930	8710	10000	10000	10000	10000
GKS07		4900	6230	7820	9940	12600	14000	14000	14000
GKS09 [1)]		6500	7400	8000	10500	13000	17000	21000	21000
GKS11 [1)]		7000	8000	9200	12000	14500	18500	27000	27000
GKS14		35000	35000	35000	35000	35000	35000	35000	35000

[1)] Reinforced output shaft bearings are available on request for V□R versions.

- Application of force F_{rad}: centre of shaft journal (x = l/2)
- $F_{ax,max}$ only valid with F_{rad} = 0



Permissible radial and axial forces at output

GKS□□-3/4□ V□K

Size	n_2 [r/min]								
Gearbox	630	400	250	160	100	63	40	25	≤16

	Max. radial force, Solid shaft with flange								
	$F_{rad,max}$	$F_{rad,max}$	$F_{rad,max}$	$F_{rad,max}$	$F_{rad,max}$	$F_{rad,max}$	$F_{rad,max}$	$F_{rad,max}$	$F_{rad,max}$
	[N]	[N]	[N]	[N]	[N]	[N]	[N]	[N]	[N]
GKS04	3100	3800	4300	4600	4600	4600	4600	4600	4600
GKS05	3800	4640	5420	6280	7000	7000	7000	7000	7000
GKS06	4700	6400	7500	8800	9800	10000	10000	10000	10000
GKS07		7000	8250	9630	11000	13000	14000	14000	14000
GKS09		9900	10500	12000	14000	15000	15000	15000	15000
GKS11		14500	16000	17600	21000	24500	28000	30000	30000
GKS14		20500	23700	27200	31300	35000	41000	43000	43000

	Max. axial force, Solid shaft with flange								
	$F_{ax,max}$	$F_{ax,max}$	$F_{ax,max}$	$F_{ax,max}$	$F_{ax,max}$	$F_{ax,max}$	$F_{ax,max}$	$F_{ax,max}$	$F_{ax,max}$
	[N]	[N]	[N]	[N]	[N]	[N]	[N]	[N]	[N]
GKS04	3300	4200	4400	4400	4400	4400	4400	4400	4400
GKS05	2900	3630	4440	5420	6600	6600	6600	6600	6600
GKS06	3700	4660	5880	7320	9230	10000	10000	10000	10000
GKS07		5700	7000	8500	10400	11500	11500	11500	11500
GKS09		6000	6600	7600	10000	12000	15000	17000	17000
GKS11		7000	7500	8500	10500	13000	17500	27000	27000
GKS14		8400	10000	11500	13000	15000	19000	28000	35000

- Application of force F_{rad}: centre of shaft journal (x = l/2)
- $F_{ax,max}$ only valid with F_{rad} = 0



Output backlash in angular minutes

► Backlash ϕ depending on ratio i

GKS04 to 14-3

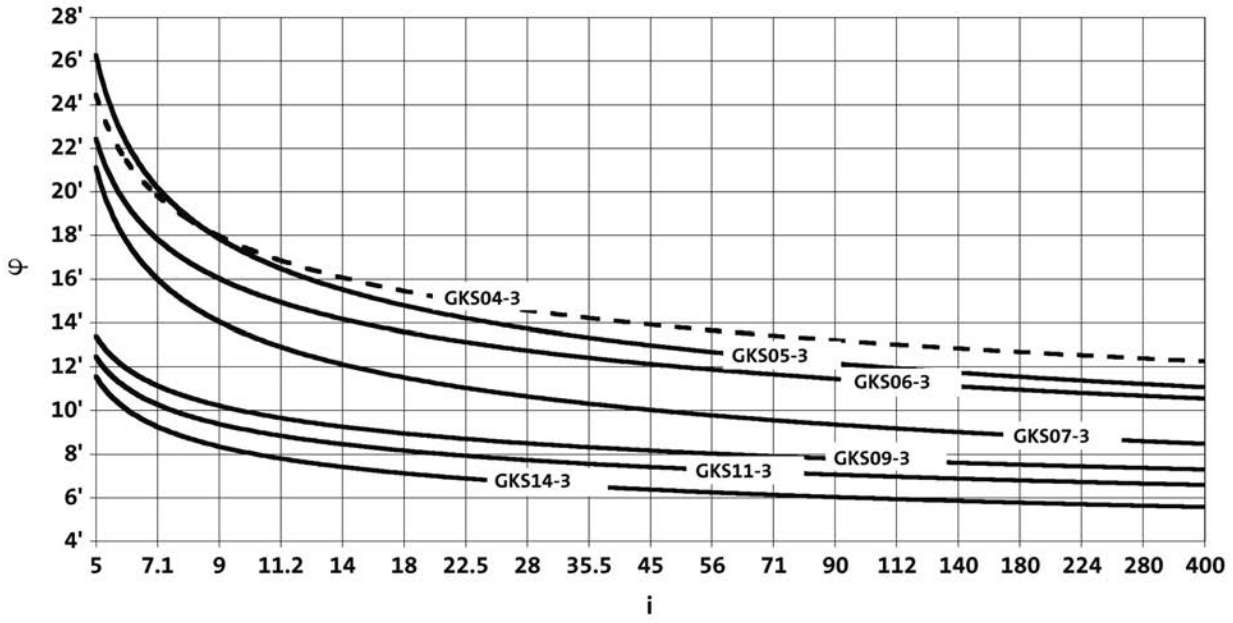

GKS05 to 14-4

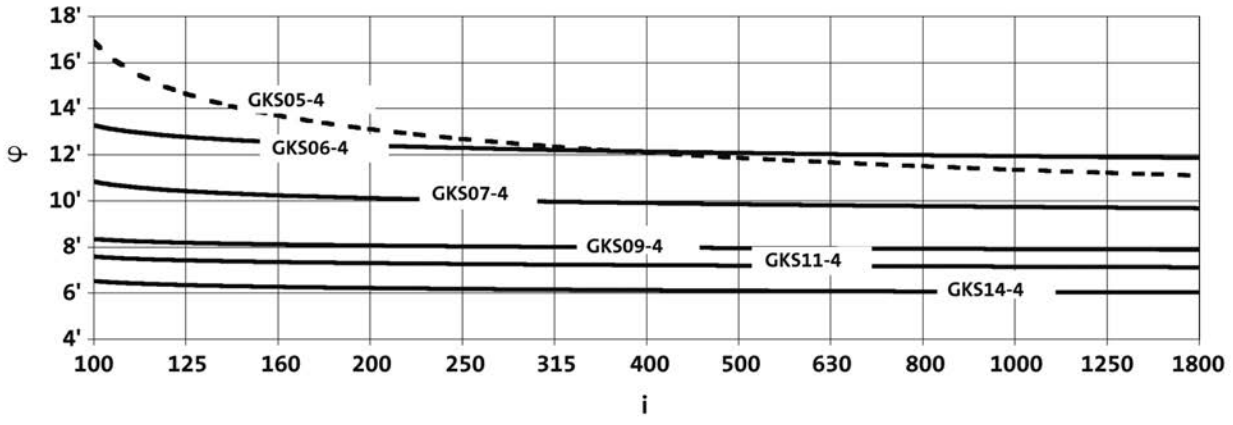

6.4



Moments of inertia

GKS□□-3

► Moment of inertia (J) depending on ratio i

Gearbox			GKS04
5.123	J	[kgcm²]	1.170
7.025	J	[kgcm²]	0.676
8.167	J	[kgcm²]	0.863
8.991	J	[kgcm²]	0.444
11.730	J	[kgcm²]	0.729
13.067	J	[kgcm²]	0.701
14.333	J	[kgcm²]	0.346
16.087	J	[kgcm²]	0.443
17.920	J	[kgcm²]	0.428
20.588	J	[kgcm²]	0.302
22.522	J	[kgcm²]	0.262
25.088	J	[kgcm²]	0.254
28.727	J	[kgcm²]	0.182
32.000	J	[kgcm²]	0.177
35.191	J	[kgcm²]	0.136
39.200	J	[kgcm²]	0.132
44.240	J	[kgcm²]	0.090
50.943	J	[kgcm²]	0.181
56.976	J	[kgcm²]	0.061
64.978	J	[kgcm²]	0.132
72.210	J	[kgcm²]	0.040
79.598	J	[kgcm²]	0.103
90.491	J	[kgcm²]	0.027
100.067	J	[kgcm²]	0.069
111.467	J	[kgcm²]	0.069
128.874	J	[kgcm²]	0.048
143.556	J	[kgcm²]	0.048
163.332	J	[kgcm²]	0.032
181.939	J	[kgcm²]	0.032
204.682	J	[kgcm²]	0.022
228.000	J	[kgcm²]	0.022
269.660	J	[kgcm²]	0.014
300.381	J	[kgcm²]	0.014

Gearbox			GKS05
6.863	J	[kgcm²]	1.900
9.412	J	[kgcm²]	1.170
10.569	J	[kgcm²]	1.600
11.667	J	[kgcm²]	1.647
13.176	J	[kgcm²]	0.711
14.494	J	[kgcm²]	1.045
16.000	J	[kgcm²]	1.040
17.054	J	[kgcm²]	1.505
19.216	J	[kgcm²]	1.474
23.388	J	[kgcm²]	0.964
26.353	J	[kgcm²]	0.948
29.931	J	[kgcm²]	0.674
32.744	J	[kgcm²]	0.584
36.894	J	[kgcm²]	0.576
41.765	J	[kgcm²]	0.419
47.059	J	[kgcm²]	0.414
51.162	J	[kgcm²]	0.321
57.647	J	[kgcm²]	0.317
66.592	J	[kgcm²]	0.200
75.033	J	[kgcm²]	0.198
82.833	J	[kgcm²]	0.145
93.333	J	[kgcm²]	0.144
107.196	J	[kgcm²]	0.091
120.784	J	[kgcm²]	0.091
130.097	J	[kgcm²]	0.067
146.588	J	[kgcm²]	0.066
166.276	J	[kgcm²]	0.043
187.353	J	[kgcm²]	0.042
211.200	J	[kgcm²]	0.081
227.484	J	[kgcm²]	0.060
256.320	J	[kgcm²]	0.060
290.745	J	[kgcm²]	0.038
327.600	J	[kgcm²]	0.038

► The moments of inertia relate to the drive shaft of the gearbox.
► The total moment of inertia is calculated by adding the values of the gearbox, motor and accessories.



Moments of inertia

GKS□□-3

► Moment of inertia (J) depending on ratio i

Gearbox			GKS06
6.485	J	[kgcm²]	5.870
9.196	J	[kgcm²]	5.048
10.147	J	[kgcm²]	4.858
11.382	J	[kgcm²]	2.492
12.612	J	[kgcm²]	3.199
14.824	J	[kgcm²]	4.287
16.699	J	[kgcm²]	4.163
17.809	J	[kgcm²]	2.126
20.329	J	[kgcm²]	2.794
22.902	J	[kgcm²]	2.729
26.017	J	[kgcm²]	1.941
28.461	J	[kgcm²]	1.666
32.063	J	[kgcm²]	1.632
36.303	J	[kgcm²]	1.183
41.472	J	[kgcm²]	2.110
44.471	J	[kgcm²]	0.900
53.074	J	[kgcm²]	1.523
57.882	J	[kgcm²]	0.578
65.207	J	[kgcm²]	0.570
72.000	J	[kgcm²]	0.422
81.111	J	[kgcm²]	0.416
93.176	J	[kgcm²]	0.257
104.967	J	[kgcm²]	0.254
113.082	J	[kgcm²]	0.189
127.392	J	[kgcm²]	0.186
142.941	J	[kgcm²]	0.122
161.029	J	[kgcm²]	0.121
190.080	J	[kgcm²]	0.227
214.133	J	[kgcm²]	0.226
230.688	J	[kgcm²]	0.168
259.880	J	[kgcm²]	0.167
291.600	J	[kgcm²]	0.109
328.500	J	[kgcm²]	0.109

Gearbox			GKS07
5.955	J	[kgcm²]	19.300
8.254	J	[kgcm²]	11.800
9.171	J	[kgcm²]	16.000
10.124	J	[kgcm²]	15.882
11.378	J	[kgcm²]	7.019
12.711	J	[kgcm²]	10.164
14.798	J	[kgcm²]	14.306
16.674	J	[kgcm²]	13.965
17.270	J	[kgcm²]	7.258
20.511	J	[kgcm²]	9.084
23.111	J	[kgcm²]	8.906
25.244	J	[kgcm²]	6.716
28.274	J	[kgcm²]	5.567
31.858	J	[kgcm²]	5.473
36.063	J	[kgcm²]	3.650
40.906	J	[kgcm²]	6.934
44.178	J	[kgcm²]	2.779
50.345	J	[kgcm²]	5.298
57.501	J	[kgcm²]	1.748
64.790	J	[kgcm²]	1.725
70.474	J	[kgcm²]	1.295
79.407	J	[kgcm²]	1.280
92.563	J	[kgcm²]	0.808
104.296	J	[kgcm²]	0.799
112.338	J	[kgcm²]	0.592
126.578	J	[kgcm²]	0.586
140.548	J	[kgcm²]	1.113
158.364	J	[kgcm²]	1.113
184.600	J	[kgcm²]	0.687
208.000	J	[kgcm²]	0.685
224.037	J	[kgcm²]	0.510
252.436	J	[kgcm²]	0.509
283.193	J	[kgcm²]	0.330
319.091	J	[kgcm²]	0.329

► The moments of inertia relate to the drive shaft of the gearbox.
► The total moment of inertia is calculated by adding the values of the gearbox, motor and accessories.



Moments of inertia

GKS□□-3

► Moment of inertia (J) depending on ratio i

Gearbox			GKS09
12.283	J	[kgcm²]	34.200
13.360	J	[kgcm²]	33.400
16.122	J	[kgcm²]	22.600
17.536	J	[kgcm²]	22.200
19.541	J	[kgcm²]	30.600
22.022	J	[kgcm²]	29.900
25.649	J	[kgcm²]	20.500
29.228	J	[kgcm²]	15.900
32.940	J	[kgcm²]	15.600
35.193	J	[kgcm²]	12.200
39.662	J	[kgcm²]	12.000
43.146	J	[kgcm²]	9.000
48.625	J	[kgcm²]	8.870
58.456	J	[kgcm²]	5.540
65.879	J	[kgcm²]	5.470
70.982	J	[kgcm²]	4.140
79.996	J	[kgcm²]	4.100
91.860	J	[kgcm²]	2.630
103.524	J	[kgcm²]	2.610
111.484	J	[kgcm²]	1.920
125.641	J	[kgcm²]	1.900
140.921	J	[kgcm²]	1.260
158.816	J	[kgcm²]	1.250
182.000	J	[kgcm²]	2.250
205.111	J	[kgcm²]	2.240
220.882	J	[kgcm²]	1.660
248.930	J	[kgcm²]	1.650
279.205	J	[kgcm²]	1.100
314.659	J	[kgcm²]	1.100

Gearbox			GKS11
12.094	J	[kgcm²]	104.000
13.154	J	[kgcm²]	101.000
15.874	J	[kgcm²]	68.000
17.265	J	[kgcm²]	66.500
19.515	J	[kgcm²]	90.300
21.989	J	[kgcm²]	90.400
25.615	J	[kgcm²]	61.200
28.021	J	[kgcm²]	52.200
31.573	J	[kgcm²]	51.300
35.741	J	[kgcm²]	36.800
40.272	J	[kgcm²]	36.200
43.783	J	[kgcm²]	27.900
49.333	J	[kgcm²]	27.500
57.683	J	[kgcm²]	17.700
64.995	J	[kgcm²]	17.500
70.887	J	[kgcm²]	13.000
79.873	J	[kgcm²]	12.900
91.737	J	[kgcm²]	8.300
103.365	J	[kgcm²]	8.210
111.335	J	[kgcm²]	6.050
125.448	J	[kgcm²]	5.990
140.732	J	[kgcm²]	3.960
158.571	J	[kgcm²]	3.930
186.572	J	[kgcm²]	7.070
210.222	J	[kgcm²]	7.050
226.431	J	[kgcm²]	5.210
255.133	J	[kgcm²]	5.200
286.219	J	[kgcm²]	3.440
322.500	J	[kgcm²]	3.430

► The moments of inertia relate to the drive shaft of the gearbox.
► The total moment of inertia is calculated by adding the values of the gearbox, motor and accessories.



Moments of inertia

GKS□□-3

► Moment of inertia (J) depending on ratio i

Gearbox			GKS14
12.435	J	[kgcm²]	283.000
13.525	J	[kgcm²]	275.000
16.646	J	[kgcm²]	198.000
18.311	J	[kgcm²]	173.000
20.065	J	[kgcm²]	249.000
22.609	J	[kgcm²]	243.000
24.696	J	[kgcm²]	183.000
27.165	J	[kgcm²]	159.000
30.609	J	[kgcm²]	156.000
34.692	J	[kgcm²]	111.000
39.089	J	[kgcm²]	109.000
42.531	J	[kgcm²]	82.400
47.923	J	[kgcm²]	81.100
56.251	J	[kgcm²]	54.200
63.382	J	[kgcm²]	53.500
68.942	J	[kgcm²]	38.900
77.681	J	[kgcm²]	38.400
90.551	J	[kgcm²]	25.100
102.029	J	[kgcm²]	24.900
109.896	J	[kgcm²]	18.300
123.826	J	[kgcm²]	18.100
138.913	J	[kgcm²]	12.000
156.522	J	[kgcm²]	11.900
186.572	J	[kgcm²]	21.600
210.222	J	[kgcm²]	21.500
226.431	J	[kgcm²]	15.900
255.133	J	[kgcm²]	15.800
286.219	J	[kgcm²]	10.500
322.500	J	[kgcm²]	10.500

► The moments of inertia relate to the drive shaft of the gearbox.
► The total moment of inertia is calculated by adding the values of the gearbox, motor and accessories.



Moments of inertia

GKS□□-4

► Moment of inertia (J) depending on ratio i

Gearbox			GKS05
95.238	J	[kgcm²]	0.143
114.987	J	[kgcm²]	0.196
126.933	J	[kgcm²]	0.196
146.667	J	[kgcm²]	0.142
161.905	J	[kgcm²]	0.141
185.547	J	[kgcm²]	0.195
209.067	J	[kgcm²]	0.195
225.867	J	[kgcm²]	0.073
236.667	J	[kgcm²]	0.141
289.917	J	[kgcm²]	0.108
326.667	J	[kgcm²]	0.108
364.467	J	[kgcm²]	0.073
410.667	J	[kgcm²]	0.073
469.389	J	[kgcm²]	0.050
510.000	J	[kgcm²]	0.023
528.889	J	[kgcm²]	0.050
594.894	J	[kgcm²]	0.033
670.303	J	[kgcm²]	0.033
820.760	J	[kgcm²]	0.050
924.800	J	[kgcm²]	0.050
1040.215	J	[kgcm²]	0.033
1172.073	J	[kgcm²]	0.033
1303.560	J	[kgcm²]	0.023
1468.800	J	[kgcm²]	0.023
1717.389	J	[kgcm²]	0.014
1935.086	J	[kgcm²]	0.014

Gearbox			GKS06
103.721	J	[kgcm²]	0.300
113.205	J	[kgcm²]	0.234
127.059	J	[kgcm²]	0.264
140.816	J	[kgcm²]	0.213
155.647	J	[kgcm²]	0.191
174.336	J	[kgcm²]	0.112
202.588	J	[kgcm²]	0.168
224.524	J	[kgcm²]	0.074
252.000	J	[kgcm²]	0.155
279.286	J	[kgcm²]	0.069
316.800	J	[kgcm²]	0.102
361.429	J	[kgcm²]	0.064
408.000	J	[kgcm²]	0.068
458.067	J	[kgcm²]	0.042
517.091	J	[kgcm²]	0.044
555.927	J	[kgcm²]	0.041
640.800	J	[kgcm²]	0.062
696.668	J	[kgcm²]	0.028
812.137	J	[kgcm²]	0.040
914.907	J	[kgcm²]	0.040
1017.741	J	[kgcm²]	0.028
1146.529	J	[kgcm²]	0.028
1340.834	J	[kgcm²]	0.017
1510.507	J	[kgcm²]	0.017

► The moments of inertia relate to the drive shaft of the gearbox.
► The total moment of inertia is calculated by adding the values of the gearbox, motor and accessories.



Moments of inertia

GKS□□-4

► Moment of inertia (J) depending on ratio i

Gearbox			GKS07
103.039	J	[kgcm²]	0.837
112.391	J	[kgcm²]	0.632
126.222	J	[kgcm²]	0.729
137.748	J	[kgcm²]	0.571
154.622	J	[kgcm²]	0.527
179.201	J	[kgcm²]	0.283
201.254	J	[kgcm²]	0.454
222.909	J	[kgcm²]	0.199
246.659	J	[kgcm²]	0.417
273.199	J	[kgcm²]	0.184
321.049	J	[kgcm²]	0.256
358.829	J	[kgcm²]	0.169
399.353	J	[kgcm²]	0.182
464.367	J	[kgcm²]	0.106
516.810	J	[kgcm²]	0.113
563.572	J	[kgcm²]	0.101
636.581	J	[kgcm²]	0.161
683.972	J	[kgcm²]	0.074
823.810	J	[kgcm²]	0.101
928.237	J	[kgcm²]	0.101
999.806	J	[kgcm²]	0.073
1126.542	J	[kgcm²]	0.073
1277.842	J	[kgcm²]	0.047
1439.822	J	[kgcm²]	0.047

Gearbox			GKS09
100.551	J	[kgcm²]	2.480
113.320	J	[kgcm²]	2.456
123.275	J	[kgcm²]	2.107
138.929	J	[kgcm²]	2.091
151.012	J	[kgcm²]	1.516
170.188	J	[kgcm²]	1.505
204.596	J	[kgcm²]	1.244
230.577	J	[kgcm²]	1.239
248.439	J	[kgcm²]	1.128
279.986	J	[kgcm²]	1.125
323.365	J	[kgcm²]	0.713
364.427	J	[kgcm²]	0.710
402.234	J	[kgcm²]	0.509
453.311	J	[kgcm²]	0.507
520.538	J	[kgcm²]	0.466
586.638	J	[kgcm²]	0.465
631.744	J	[kgcm²]	0.443
711.965	J	[kgcm²]	0.443
817.551	J	[kgcm²]	0.276
921.367	J	[kgcm²]	0.276
992.209	J	[kgcm²]	0.201
1118.204	J	[kgcm²]	0.201
1254.197	J	[kgcm²]	0.130
1413.461	J	[kgcm²]	0.130

► The moments of inertia relate to the drive shaft of the gearbox.
► The total moment of inertia is calculated by adding the values of the gearbox, motor and accessories.



Moments of inertia

GKS□□-4

► Moment of inertia (J) depending on ratio i

Gearbox			GKS11
102.119	J	[kgcm²]	7.276
115.063	J	[kgcm²]	7.205
125.095	J	[kgcm²]	6.233
140.952	J	[kgcm²]	6.186
153.242	J	[kgcm²]	4.500
172.667	J	[kgcm²]	4.469
201.890	J	[kgcm²]	3.735
227.481	J	[kgcm²]	3.717
248.106	J	[kgcm²]	3.355
279.556	J	[kgcm²]	3.343
322.931	J	[kgcm²]	2.088
363.866	J	[kgcm²]	2.081
395.787	J	[kgcm²]	1.521
445.958	J	[kgcm²]	1.517
512.196	J	[kgcm²]	1.385
577.122	J	[kgcm²]	1.382
621.619	J	[kgcm²]	1.314
700.416	J	[kgcm²]	1.312
816.455	J	[kgcm²]	0.819
919.949	J	[kgcm²]	0.818
990.879	J	[kgcm²]	0.600
1116.484	J	[kgcm²]	0.599
1252.516	J	[kgcm²]	0.386
1411.286	J	[kgcm²]	0.385

Gearbox			GKS14
97.467	J	[kgcm²]	23.471
109.822	J	[kgcm²]	23.232
119.493	J	[kgcm²]	19.936
134.640	J	[kgcm²]	19.777
158.039	J	[kgcm²]	16.438
178.072	J	[kgcm²]	16.348
193.754	J	[kgcm²]	12.076
218.315	J	[kgcm²]	12.016
237.467	J	[kgcm²]	10.871
267.568	J	[kgcm²]	10.830
321.729	J	[kgcm²]	6.420
362.512	J	[kgcm²]	6.398
390.671	J	[kgcm²]	4.749
440.193	J	[kgcm²]	4.734
513.121	J	[kgcm²]	4.330
578.164	J	[kgcm²]	4.322
622.742	J	[kgcm²]	4.122
701.681	J	[kgcm²]	4.116
805.901	J	[kgcm²]	2.620
908.058	J	[kgcm²]	2.617
978.071	J	[kgcm²]	1.912
1102.052	J	[kgcm²]	1.909
1236.326	J	[kgcm²]	1.259
1393.043	J	[kgcm²]	1.258

► The moments of inertia relate to the drive shaft of the gearbox.
► The total moment of inertia is calculated by adding the values of the gearbox, motor and accessories.



Weights, 4-pole motors

3-stage gearboxes

				m500					
				-P132L4	-P132M4	-P160L4	-P160M4	-P180L4 -P180M4	-P180V4
GKS	GKS06	m	[kg]		97				
	GKS07	m	[kg]	135	123				
	GKS09	m	[kg]	184	172	234	223		
	GKS11	m	[kg]	282	270	332	321	370	
	GKS14	m	[kg]	450	438	500	489	538	566

4-stage gearboxes

				m500				
				-P132L4	-P132M4	-P160L4	-P160M4	-P180L4 -P180M4
GKS	GKS09	m	[kg]		184			
	GKS11	m	[kg]	304	292			
	GKS14	m	[kg]	490	478	540	529	578

► Weights with oil filling for mounting position A; all values are approximate.
The weights relate to the basic version. Bear in mind that additional weights may be needed, e.g. for motor options.



Additional weights for gearboxes

Product	Mass		
	Solid shaft	Shrink disc	Flange
	m	m	m
	[kg]	[kg]	[kg]
GKS06	2.50	1.00	7.00
GKS07	5.00	1.50	11.0
GKS09	8.00	3.00	16.0
GKS11	16.0	5.00	24.0
GKS14	33.0	11.0	33.0



Selection tables, 4-pole motors

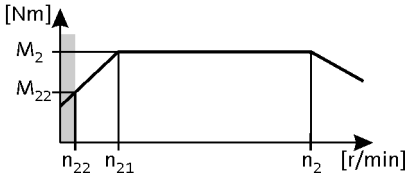

50 Hz: P_N = 5.5 kW
87 Hz: P_N = 9.6 kW

3-stage gearboxes

Mains operation 400 V, 50 Hz			Inverter operation 5 Hz -		- 20 Hz		- 50 Hz (1:10)			- 87 Hz (1:17.4)			i	Product		
n_2 [r/min]	M_2 [Nm]	c	n_{22} [r/min]	M_{22} [Nm]	n_{21} [r/min]	M_2 [Nm]	n_2 [r/min]	M_2 [Nm]	c	n_2 [r/min]	M_2 [Nm]	c		GKS	m500	
245	204	2.3	24	126	101	204	245	204	2.3				5.955	GKS07	-P132M4	52
225	222	1.2	22	137	93	222	225	222	1.2	390	224	1.0	6.485	GKS06	-P132M4	48
177	282	1.9	18	175	73	282	177	282	1.9				8.254	GKS07	-P132M4	52
159	314	2.3	16	194	65	314	159	314	2.3				9.171	GKS07	-P132M4	52
159	314	1.2	16	195	65	314	159	314	1.2				9.196	GKS06	-P132M4	48
144	346	2.3	14	215	59	346	144	346	2.3				10.124	GKS07	-P132M4	52
144	347	1.2	14	215	59	347	144	347	1.2				10.147	GKS06	-P132M4	48
128	389	1.6	13	241	53	389	128	389	1.6				11.378	GKS07	-P132M4	52
128	389	0.9	13	241	53	389	128	389	0.9				11.382	GKS06	-P132M4	48
116	431	1.0	12	267	48	431	116	431	1.0				12.612	GKS06	-P132M4	48
115	435	1.9	11	269	47	435	115	435	1.9				12.711	GKS07	-P132M4	52
99	506	2.1	9.8	314	41	506	99	506	2.1				14.798	GKS07	-P132M4	52
98	507	1.2	9.8	314	41	507	98	507	1.2				14.824	GKS06	-P132M4	48
88	570	1.9	8.7	353	36	570	88	570	1.9				16.674	GKS07	-P132M4	52
87	571	1.1	8.7	354	36	571	87	571	1.1				16.699	GKS06	-P132M4	48
85	591	1.7	8.4	366	35	591	85	591	1.7				17.270	GKS07	-P132M4	52
82	609	0.9	8.1	377	34	609	82	609	0.9				17.809	GKS06	-P132M4	48
72	695	1.0	7.1	431	30	695	72	695	1.0				20.329	GKS06	-P132M4	48
71	701	1.6	7.1	435	29	701	71	701	1.6				20.511	GKS07	-P132M4	52
63	790	1.5	6.3	490	26	790	63	790	1.5				23.111	GKS07	-P132M4	52
58	863	1.4	5.7	535	24	863	58	863	1.4				25.244	GKS07	-P132M4	52
52	967	1.2	5.1	599	21	967	52	967	1.2				28.274	GKS07	-P132M4	52
50	999	2.9	5.0	620	21	999	50	999	2.9				29.228	GKS09	-P132M4	56
46	1089	1.1	4.6	675	19	1089	46	1089	1.1				31.858	GKS07	-P132M4	52
44	1126	2.7	4.4	698	18	1126	44	1126	2.7				32.940	GKS09	-P132M4	56
42	1203	2.5	4.1	746	17	1203	42	1203	2.5				35.193	GKS09	-P132M4	56
41	1233	1.1	4.0	764	17	1233	41	1233	1.1				36.063	GKS07	-P132M4	52
37	1356	2.2	3.7	841	15	1356	37	1356	2.2				39.662	GKS09	-P132M4	56
34	1475	2.1	3.4	914	14	1475	34	1475	2.1				43.146	GKS09	-P132M4	56
33	1511	0.9	3.3	936	14	1511	33	1511	0.9				44.178	GKS07	-P132M4	52
30	1663	1.8	3.0	1031	12	1663	30	1663	1.8				48.625	GKS09	-P132M4	56
25	1972	3.0	2.5	1223	10	1972	25	1972	3.0				57.683	GKS11	-P132M4	64
25	1999	1.5	2.5	1239	10	1999	25	1999	1.5				58.456	GKS09	-P132M4	56
22	2222	2.7	2.2	1378	9.2	2222	22	2222	2.7				64.995	GKS11	-P132M4	64
22	2253	1.4	2.2	1396	9.1	2253	22	2253	1.4				65.879	GKS09	-P132M4	56



Selection tables, 4-pole motors

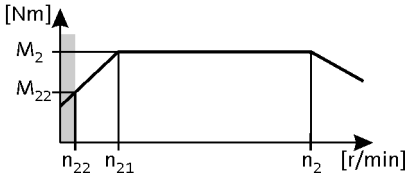

50 Hz: P_N = 5.5 kW
87 Hz: P_N = 9.6 kW

3-stage gearboxes

Mains operation 400 V, 50 Hz			Inverter operation 5 Hz -		- 20 Hz		- 50 Hz (1:10)			- 87 Hz (1:17.4)			i	Product		
n_2 [r/min]	M_2 [Nm]	c	n_{22} [r/min]	M_{22} [Nm]	n_{21} [r/min]	M_2 [Nm]	n_2 [r/min]	M_2 [Nm]	c	n_2 [r/min]	M_2 [Nm]	c		GKS	m500	
21	2424	2.5	2.0	1502	8.5	2424	21	2424	2.5				70.887	GKS11	-P132M4	64
21	2427	1.3	2.0	1504	8.5	2427	21	2427	1.3				70.982	GKS09	-P132M4	56
18	2731	2.2	1.8	1693	7.5	2731	18	2731	2.2				79.873	GKS11	-P132M4	64
18	2735	1.1	1.8	1695	7.5	2735	18	2735	1.1				79.996	GKS09	-P132M4	56
16	3137	1.9	1.6	1944	6.5	3137	16	3137	1.9				91.737	GKS11	-P132M4	64
14	3534	1.7	1.4	2191	5.8	3534	14	3534	1.7				103.365	GKS11	-P132M4	64
13	3758	3.1	1.3	2329	5.5	3758	13	3758	3.1				109.896	GKS14	-P132M4	72
13	3807	1.6	1.3	2360	5.4	3807	13	3807	1.6				111.335	GKS11	-P132M4	64
12	4234	2.8	1.2	2624	4.8	4234	12	4234	2.8				123.826	GKS14	-P132M4	72
12	4289	1.4	1.2	2659	4.8	4289	12	4289	1.4				125.448	GKS11	-P132M4	64
11	4750	2.5	1.0	2944	4.3	4750	11	4750	2.5				138.913	GKS14	-P132M4	72
9.3	5352	2.2	0.9	3317	3.8	5352	9.3	5352	2.2				156.522	GKS14	-P132M4	72
7.8	6379	0.9	0.8	3954	3.2	6379	7.8	6379	0.9				186.572	GKS11	-P132M4	64
7.8	6379	1.8	0.8	3954	3.2	6379	7.8	6379	1.8				186.572	GKS14	-P132M4	72
6.9	7188	0.8	0.7	4455	2.9	7188	6.9	7188	0.8				210.222	GKS11	-P132M4	64
6.9	7188	1.6	0.7	4455	2.9	7188	6.9	7188	1.6				210.222	GKS14	-P132M4	72
6.4	7742	1.5	0.6	4799	2.6	7742	6.4	7742	1.5				226.431	GKS14	-P132M4	72
5.7	8724	1.3	0.6	5407	2.4	8724	5.7	8724	1.3				255.133	GKS14	-P132M4	72
5.1	9787	1.2	0.5	6066	2.1	9787	5.1	9787	1.2				286.219	GKS14	-P132M4	72
4.5	11027	1.1	0.4	6835	1.9	11027	4.5	11027	1.1				322.500	GKS14	-P132M4	72

4-stage gearboxes

Mains operation 400 V, 50 Hz			Inverter operation 5 Hz -		- 20 Hz		- 50 Hz (1:10)			- 87 Hz (1:17.4)			i	Product		
n_2 [r/min]	M_2 [Nm]	c	n_{22} [r/min]	M_{22} [Nm]	n_{21} [r/min]	M_2 [Nm]	n_2 [r/min]	M_2 [Nm]	c	n_2 [r/min]	M_2 [Nm]	c		GKS	m500	
15	3276	3.1	1.5	2031	6.2	3276	15	3276	3.1				97.467	GKS14	-P132M4	76
15	3380	0.9	1.4	2095	6.0	3380	15	3380	0.9				100.551	GKS09	-P132M4	60
14	3432	1.7	1.4	2128	5.9	3432	14	3432	1.7				102.119	GKS11	-P132M4	68
13	3691	3.0	1.3	2288	5.5	3691	13	3691	3.0				109.822	GKS14	-P132M4	76
13	3867	1.5	1.3	2397	5.2	3867	13	3867	1.5				115.063	GKS11	-P132M4	68
12	4016	2.7	1.2	2490	5.0	4016	12	4016	2.7				119.493	GKS14	-P132M4	76
12	4205	1.4	1.2	2606	4.8	4205	12	4205	1.4				125.095	GKS11	-P132M4	68
11	4526	2.5	1.1	2805	4.5	4526	11	4526	2.5				134.640	GKS14	-P132M4	76
10	4738	1.3	1.0	2937	4.3	4738	10	4738	1.3				140.952	GKS11	-P132M4	68
9.5	5151	1.1	0.9	3193	3.9	5151	9.5	5151	1.1				153.242	GKS11	-P132M4	68
9.2	5312	2.2	0.9	3293	3.8	5312	9.2	5312	2.2				158.039	GKS14	-P132M4	76
8.4	5804	1.0	0.8	3597	3.5	5804	8.4	5804	1.0				172.667	GKS11	-P132M4	68
8.2	5985	1.9	0.8	3710	3.4	5985	8.2	5985	1.9				178.072	GKS14	-P132M4	76
7.5	6512	1.8	0.7	4037	3.1	6512	7.5	6512	1.8				193.754	GKS14	-P132M4	76
7.2	6786	0.9	0.7	4206	3.0	6786	7.2	6786	0.9				201.890	GKS11	-P132M4	68



Selection tables, 4-pole motors

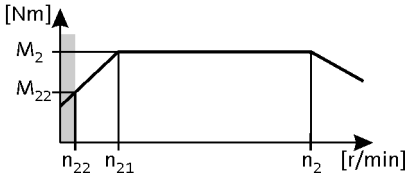

50 Hz: P_N = 5.5 kW
87 Hz: P_N = 9.6 kW

4-stage gearboxes

Mains operation 400 V, 50 Hz			Inverter operation 5 Hz -		- 20 Hz		- 50 Hz (1:10)			- 87 Hz (1:17.4)			i	Product		
n_2 [r/min]	M_2 [Nm]	c	n_{22} [r/min]	M_{22} [Nm]	n_{21} [r/min]	M_2 [Nm]	n_2 [r/min]	M_2 [Nm]	c	n_2 [r/min]	M_2 [Nm]	c		GKS	m500	
6.7	7338	1.6	0.7	4548	2.7	7338	6.7	7338	1.6				218.315	GKS14	-P132M4	76
6.1	7982	1.4	0.6	4947	2.5	7982	6.1	7982	1.4				237.467	GKS14	-P132M4	76
5.5	8993	1.3	0.5	5574	2.2	8993	5.5	8993	1.3				267.568	GKS14	-P132M4	76
4.5	10814	1.1	0.5	6703	1.9	10814	4.5	10814	1.1				321.729	GKS14	-P132M4	76
4.0	12185	1.0	0.4	7552	1.7	12185	4.0	12185	1.0				362.512	GKS14	-P132M4	76
3.7	13131	0.9	0.4	8139	1.5	13131	3.7	13131	0.9				390.671	GKS14	-P132M4	76



Selection tables, 4-pole motors

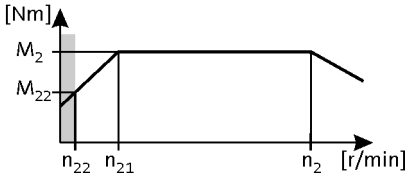

50 Hz: P_N = 7.5 kW
87 Hz: P_N = 13.1 kW

3-stage gearboxes

Mains operation 400 V, 50 Hz			Inverter operation 5 Hz -		- 20 Hz		- 50 Hz (1:10)			- 87 Hz (1:17.4)			i	Product		
n_2 [r/min]	M_2 [Nm]	c	n_{22} [r/min]	M_{22} [Nm]	n_{21} [r/min]	M_2 [Nm]	n_2 [r/min]	M_2 [Nm]	c	n_2 [r/min]	M_2 [Nm]	c		GKS	m500	
245	278	1.7	24	174	101	278	245	278	1.7				5.955	GKS07	-P132L4	52
177	385	1.4	18	241	73	385	177	385	1.4				8.254	GKS07	-P132L4	52
159	428	1.7	16	267	65	428	159	428	1.7				9.171	GKS07	-P132L4	52
144	472	1.7	14	295	59	472	144	472	1.7				10.124	GKS07	-P132L4	52
128	531	1.2	13	332	53	531	128	531	1.2				11.378	GKS07	-P132L4	52
119	573	2.8	12	358	49	573	119	573	2.8				12.283	GKS09	-P132L4	56
115	593	1.4	11	371	47	593	115	593	1.4				12.711	GKS07	-P132L4	52
109	623	2.8	11	389	45	623	109	623	2.8				13.360	GKS09	-P132L4	56
99	690	1.5	9.8	431	41	690	99	690	1.5				14.798	GKS07	-P132L4	52
90	752	2.4	9.0	470	37	752	90	752	2.4				16.122	GKS09	-P132L4	56
84	806	1.2	8.4	503	35	806	84	806	1.2				17.270	GKS07	-P132L4	52
83	818	2.4	8.3	511	34	818	83	818	2.4				17.536	GKS09	-P132L4	56
75	912	2.8	7.4	570	31	912	75	912	2.8				19.541	GKS09	-P132L4	56
71	957	1.2	7.1	598	29	957	71	957	1.2				20.511	GKS07	-P132L4	52
66	1028	2.6	6.6	642	27	1028	66	1028	2.6				22.022	GKS09	-P132L4	56
63	1078	1.1	6.3	674	26	1078	63	1078	1.1				23.111	GKS07	-P132L4	52
58	1178	1.0	5.7	736	24	1178	58	1178	1.0				25.244	GKS07	-P132L4	52
57	1197	2.4	5.7	748	23	1197	57	1197	2.4				25.649	GKS09	-P132L4	56
52	1319	0.9	5.1	824	21	1319	52	1319	0.9				28.274	GKS07	-P132L4	52
50	1364	2.1	5.0	852	21	1364	50	1364	2.1				29.228	GKS09	-P132L4	56
44	1537	1.9	4.4	960	18	1537	44	1537	1.9				32.940	GKS09	-P132L4	56
41	1642	1.8	4.1	1026	17	1642	41	1642	1.8				35.193	GKS09	-P132L4	56
37	1851	1.6	3.7	1156	15	1851	37	1851	1.6				39.662	GKS09	-P132L4	56
36	1879	3.1	3.6	1174	15	1879	36	1879	3.1				40.272	GKS11	-P132L4	64
34	2013	1.5	3.4	1258	14	2013	34	2013	1.5				43.146	GKS09	-P132L4	56
33	2043	2.8	3.3	1276	14	2043	33	2043	2.8				43.783	GKS11	-P132L4	64
30	2269	1.3	3.0	1417	12	2269	30	2269	1.3				48.625	GKS09	-P132L4	56
30	2302	2.6	2.9	1438	12	2302	30	2302	2.6				49.333	GKS11	-P132L4	64
25	2691	2.2	2.5	1681	10	2691	25	2691	2.2				57.683	GKS11	-P132L4	64
25	2728	1.1	2.5	1704	10	2728	25	2728	1.1				58.456	GKS09	-P132L4	56
22	3033	2.0	2.2	1895	9.2	3033	22	3033	2.0				64.995	GKS11	-P132L4	64
22	3074	1.0	2.2	1920	9.1	3074	22	3074	1.0				65.879	GKS09	-P132L4	56
21	3308	1.8	2.0	2066	8.5	3308	21	3308	1.8				70.887	GKS11	-P132L4	64
21	3312	0.9	2.0	2069	8.5	3312	21	3312	0.9				70.982	GKS09	-P132L4	56
19	3625	3.2	1.9	2264	7.7	3625	19	3625	3.2				77.681	GKS14	-P132L4	72



Selection tables, 4-pole motors

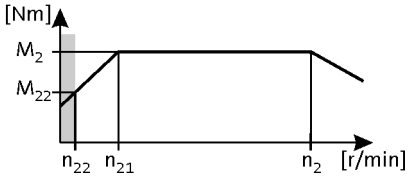

50 Hz: P_N = 7.5 kW
87 Hz: P_N = 13.1 kW

3-stage gearboxes

Mains operation 400 V, 50 Hz			Inverter operation 5 Hz -		- 20 Hz		- 50 Hz (1:10)			- 87 Hz (1:17.4)			i	Product		
n_2 [r/min]	M_2 [Nm]	c	n_{22} [r/min]	M_{22} [Nm]	n_{21} [r/min]	M_2 [Nm]	n_2 [r/min]	M_2 [Nm]	c	n_2 [r/min]	M_2 [Nm]	c		GKS	m500	
18	3727	1.6	1.8	2328	7.5	3727	18	3727	1.6				79.873	GKS11	-P132L4	64
18	3733	0.8	1.8	2332	7.5	3733	18	3733	0.8				79.996	GKS09	-P132L4	56
16	4225	2.7	1.6	2640	6.6	4225	16	4225	2.7				90.551	GKS14	-P132L4	72
16	4280	1.4	1.6	2674	6.5	4280	16	4280	1.4				91.737	GKS11	-P132L4	64
14	4761	2.4	1.4	2974	5.9	4761	14	4761	2.4				102.029	GKS14	-P132L4	72
14	4823	1.3	1.4	3013	5.8	4823	14	4823	1.3				103.365	GKS11	-P132L4	64
13	5128	2.3	1.3	3203	5.5	5128	13	5128	2.3				109.896	GKS14	-P132L4	72
12	5778	2.0	1.2	3609	4.8	5778	12	5778	2.0				123.826	GKS14	-P132L4	72
7.8	8705	1.3	0.8	5438	3.2	8705	7.8	8705	1.3				186.572	GKS14	-P132L4	72
6.9	9809	1.2	0.7	6128	2.9	9809	6.9	9809	1.2				210.222	GKS14	-P132L4	72
6.4	10565	1.1	0.6	6600	2.6	10565	6.4	10565	1.1				226.431	GKS14	-P132L4	72
5.7	11904	1.0	0.6	7437	2.4	11904	5.7	11904	1.0				255.133	GKS14	-P132L4	72

4-stage gearboxes

Mains operation 400 V, 50 Hz			Inverter operation 5 Hz -		- 20 Hz		- 50 Hz (1:10)			- 87 Hz (1:17.4)			i	Product		
n_2 [r/min]	M_2 [Nm]	c	n_{22} [r/min]	M_{22} [Nm]	n_{21} [r/min]	M_2 [Nm]	n_2 [r/min]	M_2 [Nm]	c	n_2 [r/min]	M_2 [Nm]	c		GKS	m500	
15	4470	2.2	1.5	2793	6.2	4470	15	4470	2.2				97.467	GKS14	-P132L4	76
14	4684	1.2	1.4	2926	5.9	4684	14	4684	1.2				102.119	GKS11	-P132L4	68
13	5037	2.2	1.3	3147	5.5	5037	13	5037	2.2				109.822	GKS14	-P132L4	76
13	5277	1.1	1.3	3297	5.2	5277	13	5277	1.1				115.063	GKS11	-P132L4	68
12	5481	2.0	1.2	3424	5.0	5481	12	5481	2.0				119.493	GKS14	-P132L4	76
12	5738	1.0	1.2	3584	4.8	5738	12	5738	1.0				125.095	GKS11	-P132L4	68
11	6175	1.8	1.1	3858	4.5	6175	11	6175	1.8				134.640	GKS14	-P132L4	76
10	6465	0.9	1.0	4039	4.3	6465	10	6465	0.9				140.952	GKS11	-P132L4	68
9.5	7029	0.8	0.9	4391	3.9	7029	9.5	7029	0.8				153.242	GKS11	-P132L4	68
9.2	7249	1.6	0.9	4528	3.8	7249	9.2	7249	1.6				158.039	GKS14	-P132L4	76
8.2	8167	1.4	0.8	5102	3.4	8167	8.2	8167	1.4				178.072	GKS14	-P132L4	76
7.5	8887	1.3	0.7	5552	3.1	8887	7.5	8887	1.3				193.754	GKS14	-P132L4	76
6.7	10013	1.2	0.7	6255	2.7	10013	6.7	10013	1.2				218.315	GKS14	-P132L4	76
6.1	10892	1.1	0.6	6804	2.5	10892	6.1	10892	1.1				237.467	GKS14	-P132L4	76
5.4	12272	0.9	0.5	7667	2.2	12272	5.4	12272	0.9				267.568	GKS14	-P132L4	76



Selection tables, 4-pole motors

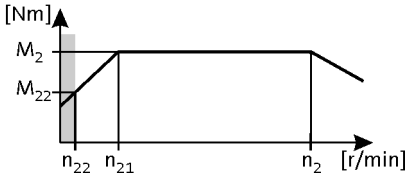

50 Hz: P_N = 11.0 kW
87 Hz: P_N = 19.2 kW

3-stage gearboxes

Mains operation 400 V, 50 Hz			Inverter operation 5 Hz -		- 20 Hz		- 50 Hz (1:10)			- 87 Hz (1:17.4)			i	Product		
n_2 [r/min]	M_2 [Nm]	c	n_{22} [r/min]	M_{22} [Nm]	n_{21} [r/min]	M_2 [Nm]	n_2 [r/min]	M_2 [Nm]	c	n_2 [r/min]	M_2 [Nm]	c		GKS	m500	
120	832	1.9	12	459	49	832	120	832	1.9				12.283	GKS09	-P160M4	56
110	905	1.9	11	499	45	905	110	905	1.9				13.360	GKS09	-P160M4	56
93	1075	2.9	9.1	593	38	1075	93	1075	2.9				15.874	GKS11	-P160M4	64
91	1092	1.7	9.0	602	37	1092	91	1092	1.7				16.122	GKS09	-P160M4	56
85	1170	2.9	8.4	645	35	1170	85	1170	2.9				17.265	GKS11	-P160M4	64
84	1188	1.7	8.3	655	34	1188	84	1188	1.7				17.536	GKS09	-P160M4	56
75	1324	1.9	7.4	730	31	1324	75	1324	1.9				19.541	GKS09	-P160M4	56
67	1492	1.8	6.6	823	27	1492	67	1492	1.8				22.022	GKS09	-P160M4	56
58	1735	2.9	5.7	957	23	1735	58	1735	2.9				25.615	GKS11	-P160M4	64
57	1737	1.7	5.7	958	23	1737	57	1737	1.7				25.649	GKS09	-P160M4	56
53	1898	2.7	5.2	1047	21	1898	53	1898	2.7				28.021	GKS11	-P160M4	64
50	1980	1.5	5.0	1092	21	1980	50	1980	1.5				29.228	GKS09	-P160M4	56
47	2139	2.6	4.6	1179	19	2139	47	2139	2.6				31.573	GKS11	-P160M4	64
45	2231	1.3	4.4	1230	18	2231	45	2231	1.3				32.940	GKS09	-P160M4	56
42	2384	1.3	4.1	1315	17	2384	42	2384	1.3				35.193	GKS09	-P160M4	56
41	2421	2.3	4.1	1335	17	2421	41	2421	2.3				35.741	GKS11	-P160M4	64
37	2687	1.1	3.7	1482	15	2687	37	2687	1.1				39.662	GKS09	-P160M4	56
37	2728	2.2	3.6	1504	15	2728	37	2728	2.2				40.272	GKS11	-P160M4	64
34	2923	1.0	3.4	1612	14	2923	34	2923	1.0				43.146	GKS09	-P160M4	56
34	2966	2.0	3.3	1636	14	2966	34	2966	2.0				43.783	GKS11	-P160M4	64
30	3294	0.9	3.0	1816	12	3294	30	3294	0.9				48.625	GKS09	-P160M4	56
30	3342	1.8	2.9	1843	12	3342	30	3342	1.8				49.333	GKS11	-P160M4	64
26	3810	3.0	2.6	2101	11	3810	26	3810	3.0				56.251	GKS14	-P160M4	72
26	3907	1.5	2.5	2155	10	3907	26	3907	1.5				57.683	GKS11	-P160M4	64
23	4293	2.7	2.3	2368	9.5	4293	23	4293	2.7				63.382	GKS14	-P160M4	72
23	4403	1.4	2.2	2428	9.2	4403	23	4403	1.4				64.995	GKS11	-P160M4	64
21	4670	2.5	2.1	2575	8.7	4670	21	4670	2.5				68.942	GKS14	-P160M4	72
21	4802	1.2	2.0	2648	8.5	4802	21	4802	1.2				70.887	GKS11	-P160M4	64
19	5262	2.2	1.9	2902	7.7	5262	19	5262	2.2				77.681	GKS14	-P160M4	72
18	5410	1.1	1.8	2984	7.5	5410	18	5410	1.1				79.873	GKS11	-P160M4	64
16	6134	1.9	1.6	3382	6.6	6134	16	6134	1.9				90.551	GKS14	-P160M4	72
14	6911	1.7	1.4	3811	5.9	6911	14	6911	1.7				102.029	GKS14	-P160M4	72
13	7444	1.6	1.3	4105	5.5	7444	13	7444	1.6				109.896	GKS14	-P160M4	72
12	8388	1.4	1.2	4625	4.8	8388	12	8388	1.4				123.826	GKS14	-P160M4	72
7.9	12638	0.9	0.8	6969	3.2	12638	7.9	12638	0.9				186.572	GKS14	-P160M4	72



Selection tables, 4-pole motors

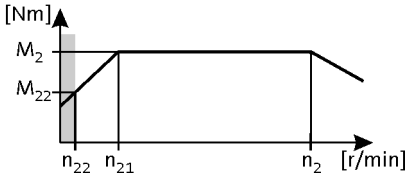

50 Hz: P_N = 11.0 kW
87 Hz: P_N = 19.2 kW

3-stage gearboxes

Mains operation 400 V, 50 Hz			Inverter operation 5 Hz -		- 20 Hz		- 50 Hz (1:10)			- 87 Hz (1:17.4)			i	Product		
n_2 [r/min]	M_2 [Nm]	c	n_{22} [r/min]	M_{22} [Nm]	n_{21} [r/min]	M_2 [Nm]	n_2 [r/min]	M_2 [Nm]	c	n_2 [r/min]	M_2 [Nm]	c		GKS	m500	
7.0	14240	0.8	0.7	7853	2.9	14240	7.0	14240	0.8				210.222	GKS14	-P160M4	72

4-stage gearboxes

Mains operation 400 V, 50 Hz			Inverter operation 5 Hz -		- 20 Hz		- 50 Hz (1:10)			- 87 Hz (1:17.4)			i	Product		
n_2 [r/min]	M_2 [Nm]	c	n_{22} [r/min]	M_{22} [Nm]	n_{21} [r/min]	M_2 [Nm]	n_2 [r/min]	M_2 [Nm]	c	n_2 [r/min]	M_2 [Nm]	c		GKS	m500	
15	6490	1.5	1.5	3579	6.2	6490	15	6490	1.5				97.467	GKS14	-P160M4	76
13	7312	1.5	1.3	4033	5.5	7312	13	7312	1.5				109.822	GKS14	-P160M4	76
12	7956	1.4	1.2	4388	5.0	7956	12	7956	1.4				119.493	GKS14	-P160M4	76
11	8965	1.3	1.1	4944	4.5	8965	11	8965	1.3				134.640	GKS14	-P160M4	76
9.3	10523	1.1	0.9	5803	3.8	10523	9.3	10523	1.1				158.039	GKS14	-P160M4	76
8.3	11857	1.0	0.8	6539	3.4	11857	8.3	11857	1.0				178.072	GKS14	-P160M4	76
7.6	12901	0.9	0.7	7114	3.1	12901	7.6	12901	0.9				193.754	GKS14	-P160M4	76



Selection tables, 4-pole motors

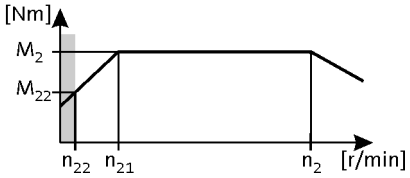

50 Hz: P_N = 15.0 kW
87 Hz: P_N = 26.2 kW

3-stage gearboxes

Mains operation 400 V, 50 Hz			Inverter operation 5 Hz -		- 20 Hz		- 50 Hz (1:10)			- 87 Hz (1:17.4)			i	Product		
n_2 [r/min]	M_2 [Nm]	c	n_{22} [r/min]	M_{22} [Nm]	n_{21} [r/min]	M_2 [Nm]	n_2 [r/min]	M_2 [Nm]	c	n_2 [r/min]	M_2 [Nm]	c		GKS	m500	
93	1464	2.1	9.1	808	38	1464	93	1464	2.1				15.874	GKS11	-P160L4	64
85	1593	2.1	8.4	879	35	1593	85	1593	2.1				17.265	GKS11	-P160L4	64
58	2363	2.1	5.7	1303	23	2363	58	2363	2.1				25.615	GKS11	-P160L4	64
53	2585	2.0	5.2	1426	21	2585	53	2585	2.0				28.021	GKS11	-P160L4	64
47	2912	1.9	4.6	1607	19	2912	47	2912	1.9				31.573	GKS11	-P160L4	64
43	3200	3.1	4.2	1765	17	3200	43	3200	3.1				34.692	GKS14	-P160L4	72
42	3246	0.9	4.1	1791	17	3246	42	3246	0.9				35.193	GKS09	-P160L4	56
41	3297	1.7	4.1	1819	17	3297	41	3297	1.7				35.741	GKS11	-P160L4	64
38	3606	3.0	3.7	1989	15	3606	38	3606	3.0				39.089	GKS14	-P160L4	72
37	3715	1.6	3.6	2049	15	3715	37	3715	1.6				40.272	GKS11	-P160L4	64
35	3923	2.8	3.4	2164	14	3923	35	3923	2.8				42.531	GKS14	-P160L4	72
34	4039	1.4	3.3	2228	14	4039	34	4039	1.4				43.783	GKS11	-P160L4	64
31	4421	2.6	3.0	2439	13	4421	31	4421	2.6				47.923	GKS14	-P160L4	72
30	4551	1.3	2.9	2510	12	4551	30	4551	1.3				49.333	GKS11	-P160L4	64
26	5189	2.2	2.6	2862	11	5189	26	5189	2.2				56.251	GKS14	-P160L4	72
26	5321	1.1	2.5	2935	10	5321	26	5321	1.1				57.683	GKS11	-P160L4	64
23	5846	2.0	2.3	3225	9.5	5846	23	5846	2.0				63.382	GKS14	-P160L4	72
23	5995	1.0	2.2	3307	9.2	5995	23	5995	1.0				64.995	GKS11	-P160L4	64
21	6359	1.8	2.1	3508	8.7	6359	21	6359	1.8				68.942	GKS14	-P160L4	72
21	6539	0.9	2.0	3607	8.5	6539	21	6539	0.9				70.887	GKS11	-P160L4	64
19	7166	1.6	1.9	3953	7.7	7166	19	7166	1.6				77.681	GKS14	-P160L4	72
19	7368	0.8	1.8	4064	7.5	7368	19	7368	0.8				79.873	GKS11	-P160L4	64
16	8353	1.4	1.6	4608	6.6	8353	16	8353	1.4				90.551	GKS14	-P160L4	72
15	9411	1.2	1.4	5192	5.9	9411	15	9411	1.2				102.029	GKS14	-P160L4	72
13	10137	1.2	1.3	5592	5.5	10137	13	10137	1.2				109.896	GKS14	-P160L4	72
12	11422	1.0	1.2	6301	4.8	11422	12	11422	1.0				123.826	GKS14	-P160L4	72

4-stage gearboxes

Mains operation 400 V, 50 Hz			Inverter operation 5 Hz -		- 20 Hz		- 50 Hz (1:10)			- 87 Hz (1:17.4)			i	Product		
n_2 [r/min]	M_2 [Nm]	c	n_{22} [r/min]	M_{22} [Nm]	n_{21} [r/min]	M_2 [Nm]	n_2 [r/min]	M_2 [Nm]	c	n_2 [r/min]	M_2 [Nm]	c		GKS	m500	
15	8838	1.1	1.5	4875	6.2	8838	15	8838	1.1				97.467	GKS14	-P160L4	76
13	9958	1.1	1.3	5493	5.5	9958	13	9958	1.1				109.822	GKS14	-P160L4	76
12	10835	1.0	1.2	5977	5.0	10835	12	10835	1.0				119.493	GKS14	-P160L4	76
11	12208	0.9	1.1	6735	4.5	12208	11	12208	0.9				134.640	GKS14	-P160L4	76
9.3	14330	0.8	0.9	7905	3.8	14330	9.3	14330	0.8				158.039	GKS14	-P160L4	76



Selection tables, 4-pole motors

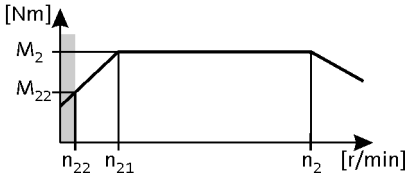

50 Hz: P_N = 18.5 kW
87 Hz: P_N = 32.5 kW

3-stage gearboxes

Mains operation 400 V, 50 Hz			Inverter operation 5 Hz -		- 20 Hz		- 50 Hz (1:10)			- 87 Hz (1:17.4)			i	Product		
n_2 [r/min]	M_2 [Nm]	c	n_{22} [r/min]	M_{22} [Nm]	n_{21} [r/min]	M_2 [Nm]	n_2 [r/min]	M_2 [Nm]	c	n_2 [r/min]	M_2 [Nm]	c		GKS	m500	
81	2085	3.0	7.9	1146	33	2085	81	2085	3.0				18.311	GKS14	-P180M4	72
54	3093	3.0	5.3	1700	22	3093	54	3093	3.0				27.165	GKS14	-P180M4	72
48	3485	2.9	4.7	1916	20	3485	48	3485	2.9				30.609	GKS14	-P180M4	72
43	3949	2.5	4.2	2171	17	3949	43	3949	2.5				34.692	GKS14	-P180M4	72
41	4069	1.4	4.1	2237	17	4069	41	4069	1.4				35.741	GKS11	-P180M4	64
38	4450	2.5	3.7	2446	15	4450	38	4450	2.5				39.089	GKS14	-P180M4	72
37	4585	1.3	3.6	2521	15	4585	37	4585	1.3				40.272	GKS11	-P180M4	64
35	4842	2.2	3.4	2662	14	4842	35	4842	2.2				42.531	GKS14	-P180M4	72
34	4984	1.2	3.3	2740	14	4984	34	4984	1.2				43.783	GKS11	-P180M4	64
31	5456	2.1	3.0	2999	13	5456	31	5456	2.1				47.923	GKS14	-P180M4	72
30	5616	1.1	2.9	3088	12	5616	30	5616	1.1				49.333	GKS11	-P180M4	64
26	6404	1.8	2.6	3521	11	6404	26	6404	1.8				56.251	GKS14	-P180M4	72
26	6567	0.9	2.5	3610	10	6567	26	6567	0.9				57.683	GKS11	-P180M4	64
23	7216	1.6	2.3	3967	9.5	7216	23	7216	1.6				63.382	GKS14	-P180M4	72
23	7399	0.8	2.2	4068	9.2	7399	23	7399	0.8				64.995	GKS11	-P180M4	64
21	7849	1.5	2.1	4315	8.7	7849	21	7849	1.5				68.942	GKS14	-P180M4	72
19	8843	1.3	1.9	4862	7.7	8843	19	8843	1.3				77.681	GKS14	-P180M4	72
16	10309	1.1	1.6	5667	6.6	10309	16	10309	1.1				90.551	GKS14	-P180M4	72
14	11615	1.0	1.4	6386	5.9	11615	14	11615	1.0				102.029	GKS14	-P180M4	72

4-stage gearboxes

Mains operation 400 V, 50 Hz			Inverter operation 5 Hz -		- 20 Hz		- 50 Hz (1:10)			- 87 Hz (1:17.4)			i	Product		
n_2 [r/min]	M_2 [Nm]	c	n_{22} [r/min]	M_{22} [Nm]	n_{21} [r/min]	M_2 [Nm]	n_2 [r/min]	M_2 [Nm]	c	n_2 [r/min]	M_2 [Nm]	c		GKS	m500	
15	10907	0.9	1.5	5996	6.2	10907	15	10907	0.9				97.467	GKS14	-P180M4	76
13	12290	0.9	1.3	6757	5.5	12290	13	12290	0.9				109.822	GKS14	-P180M4	76
12	13372	0.8	1.2	7352	5.0	13372	12	13372	0.8				119.493	GKS14	-P180M4	76



Selection tables, 4-pole motors

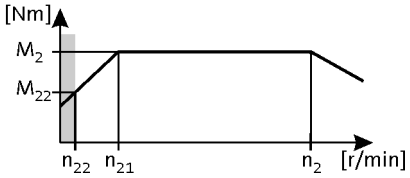

50 Hz: P_N = 22.0 kW
87 Hz: P_N = 38.1 kW

3-stage gearboxes

Mains operation 400 V, 50 Hz			Inverter operation 5 Hz -		- 20 Hz		- 50 Hz (1:10)			- 87 Hz (1:17.4)			i	Product		
n_2 [r/min]	M_2 [Nm]	c	n_{22} [r/min]	M_{22} [Nm]	n_{21} [r/min]	M_2 [Nm]	n_2 [r/min]	M_2 [Nm]	c	n_2 [r/min]	M_2 [Nm]	c		GKS	m500	
43	4684	2.1	4.2	2590	17	4684	43	4684	2.1				34.692	GKS14	-P180L4	72
38	5278	2.1	3.7	2918	15	5278	38	5278	2.1				39.089	GKS14	-P180L4	72
35	5742	1.9	3.4	3175	14	5742	35	5742	1.9				42.531	GKS14	-P180L4	72
34	5911	1.0	3.3	3269	14	5911	34	5911	1.0				43.783	GKS11	-P180L4	64
31	6470	1.7	3.0	3578	13	6470	31	6470	1.7				47.923	GKS14	-P180L4	72
26	7595	1.5	2.6	4199	11	7595	26	7595	1.5				56.251	GKS14	-P180L4	72
23	8557	1.3	2.3	4732	9.5	8557	23	8557	1.3				63.382	GKS14	-P180L4	72
21	9308	1.2	2.1	5147	8.7	9308	21	9308	1.2				68.942	GKS14	-P180L4	72
19	10488	1.1	1.9	5799	7.7	10488	19	10488	1.1				77.681	GKS14	-P180L4	72
16	12226	0.9	1.6	6760	6.6	12226	16	12226	0.9				90.551	GKS14	-P180L4	72
15	13775	0.8	1.4	7617	5.9	13775	15	13775	0.8				102.029	GKS14	-P180L4	72



Selection tables, 4-pole motors

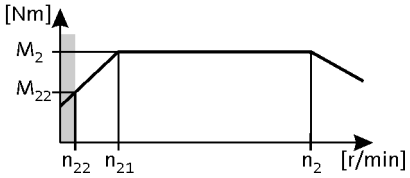

50 Hz: P_N = 30.0 kW
87 Hz: P_N = 52.0 kW

3-stage gearboxes

Mains operation 400 V, 50 Hz			Inverter operation 5 Hz -		- 20 Hz		- 50 Hz (1:10)			- 87 Hz (1:17.4)			i	Product		
n_2 [r/min]	M_2 [Nm]	c	n_{22} [r/min]	M_{22} [Nm]	n_{21} [r/min]	M_2 [Nm]	n_2 [r/min]	M_2 [Nm]	c	n_2 [r/min]	M_2 [Nm]	c		GKS	m500	
26	10342	1.1	2.6	4572	11	10342	26	10342	1.1				56.251	GKS14	-P180V4	72



Dimensions, 4-pole motors

GKS06, 3-stage gearboxes

Dimensions with hollow shaft and foot (HBR)
Dimensions with hollow shaft and foot, centering (HAR)

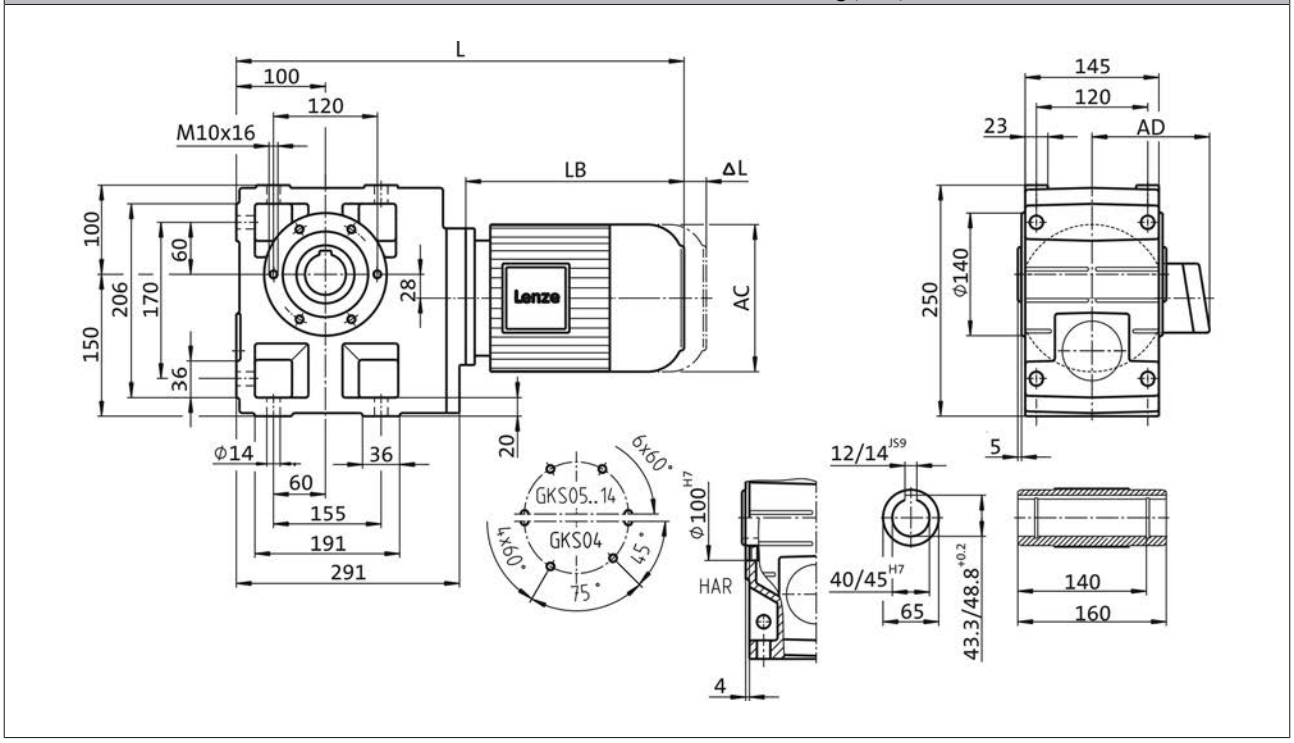

Product			m500
			-P132M4
Dimensions			
Total length	**L**	**[mm]**	807
Motor length	**LB**	**[mm]**	490
Length of motor options	**Δ L**	**[mm]**	176
Motor diameter	**AC**	**[mm]**	258
Distance motor/connection	**AD**	**[mm]**	182



Dimensions, 4-pole motors

GKS06, 3-stage gearboxes

Dimensions with hollow shaft and foot, flange (HAK)

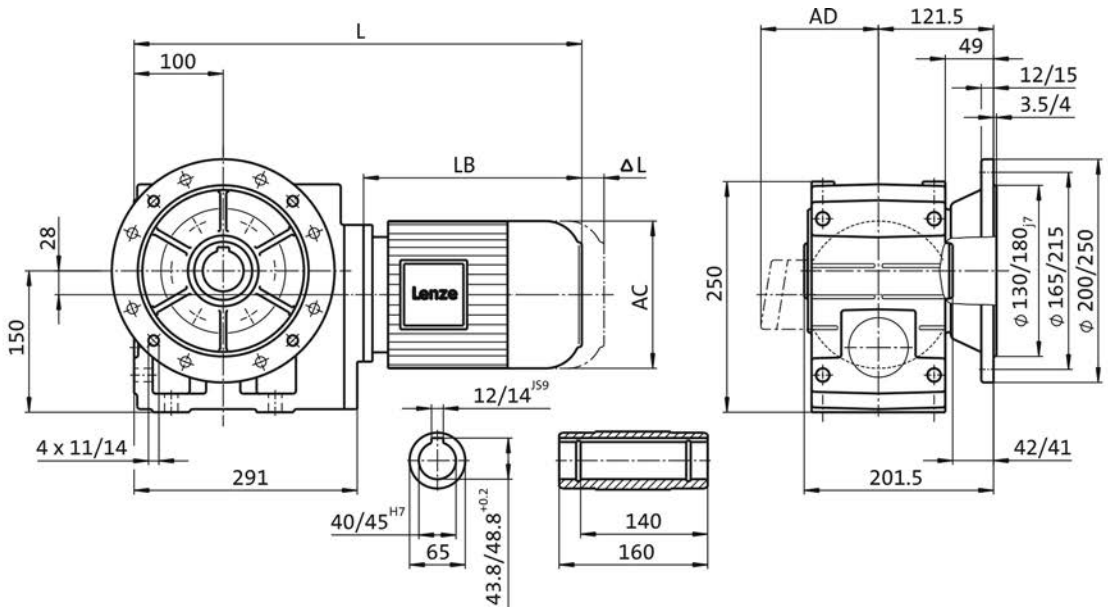

Product			m500
			-P132M4
Dimensions			
Total length	**L**	**[mm]**	807
Motor length	**LB**	**[mm]**	490
Length of motor options	**Δ L**	**[mm]**	176
Motor diameter	**AC**	**[mm]**	258
Distance motor/connection	**AD**	**[mm]**	182

Dimensions, 4-pole motors

GKS06, 3-stage gearboxes

Dimensions with solid shaft and foot (VBR)
Dimensions with solid shaft and foot, centering (VAR)

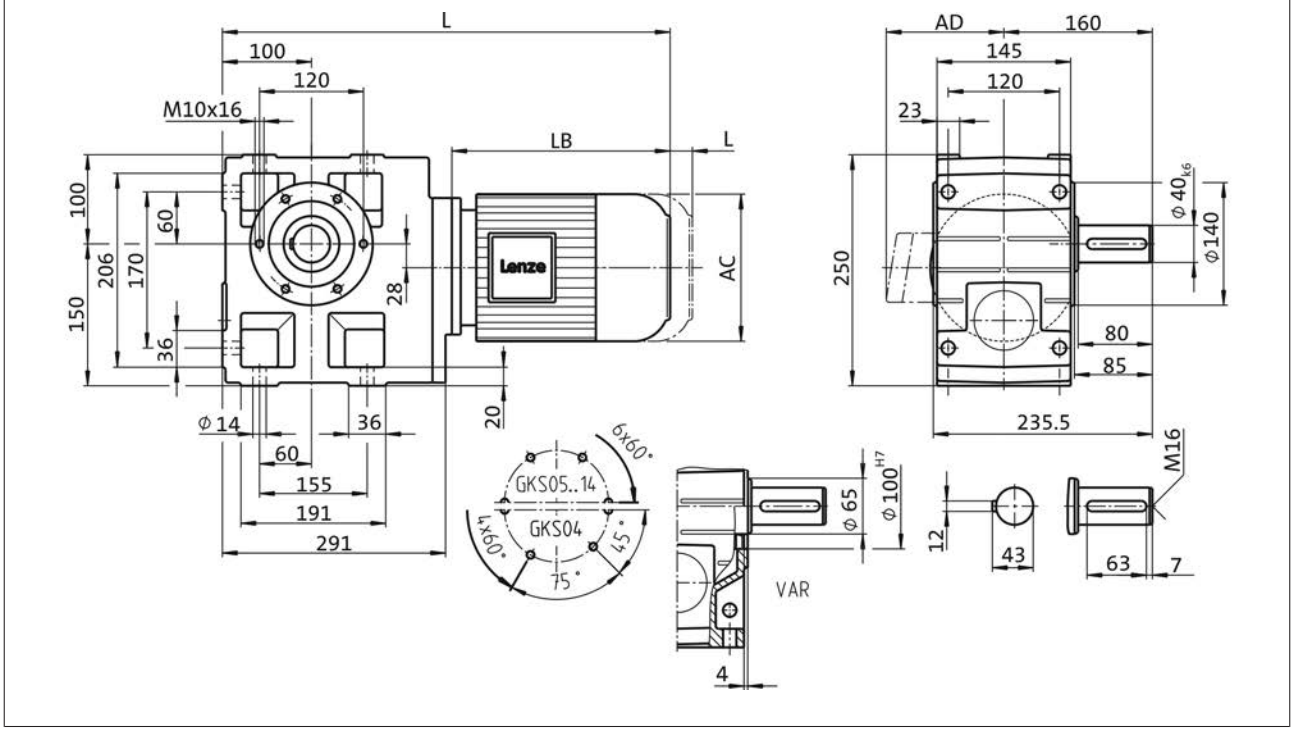

Product			m500
			-P132M4
Dimensions			
Total length	**L**	**[mm]**	807
Motor length	**LB**	**[mm]**	490
Length of motor options	**Δ L**	**[mm]**	176
Motor diameter	**AC**	**[mm]**	258
Distance motor/connection	**AD**	**[mm]**	182



Dimensions, 4-pole motors

GKS06, 3-stage gearboxes

Dimensions with solid shaft and foot, flange (VAK)

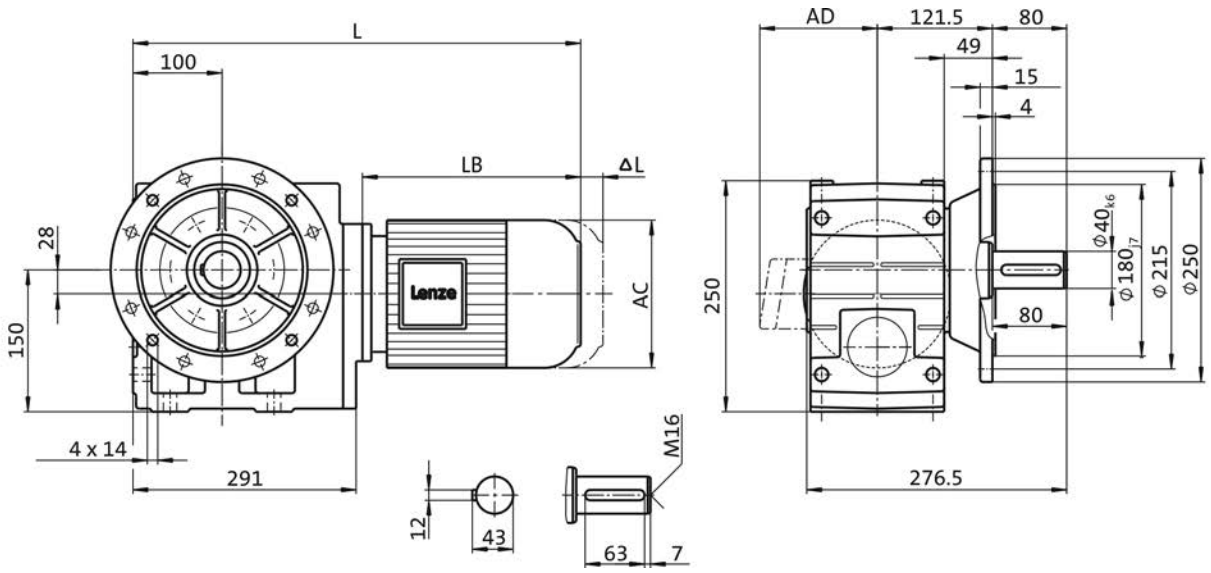

Product			m500
			-P132M4
Dimensions			
Total length	**L**	**[mm]**	807
Motor length	**LB**	**[mm]**	490
Length of motor options	**Δ L**	**[mm]**	176
Motor diameter	**AC**	**[mm]**	258
Distance motor/connection	**AD**	**[mm]**	182



Dimensions, 4-pole motors

GKS07, 3-stage gearboxes

Dimensions with hollow shaft and foot (HBR)
Dimensions with hollow shaft and foot, centering (HAR)

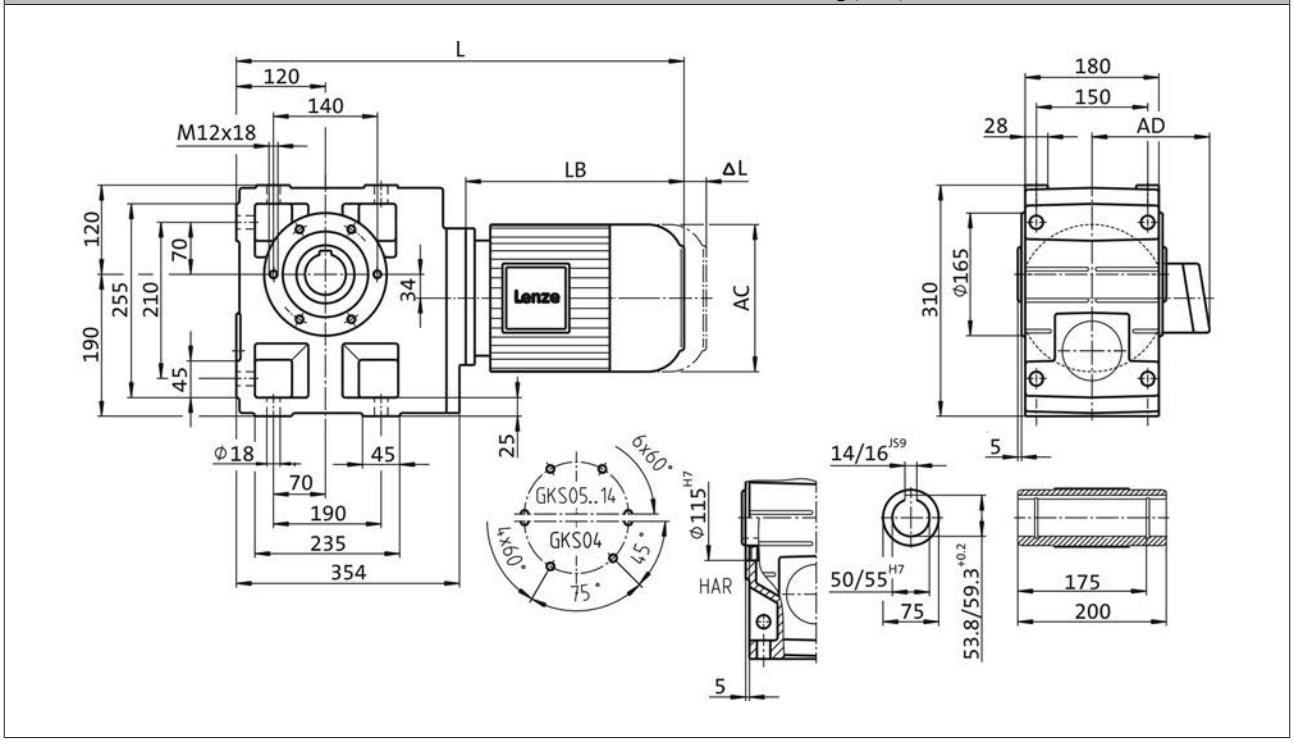

Product			m500	
			-P132L4	-P132M4
Dimensions				
Total length	**L**	**[mm]**	863	
Motor length	**LB**	**[mm]**	490	
Length of motor options	**Δ L**	**[mm]**	176	
Motor diameter	**AC**	**[mm]**	258	
Distance motor/connection	**AD**	**[mm]**	182	



Dimensions, 4-pole motors

GKS07, 3-stage gearboxes

Dimensions with hollow shaft and foot, flange (HAK)

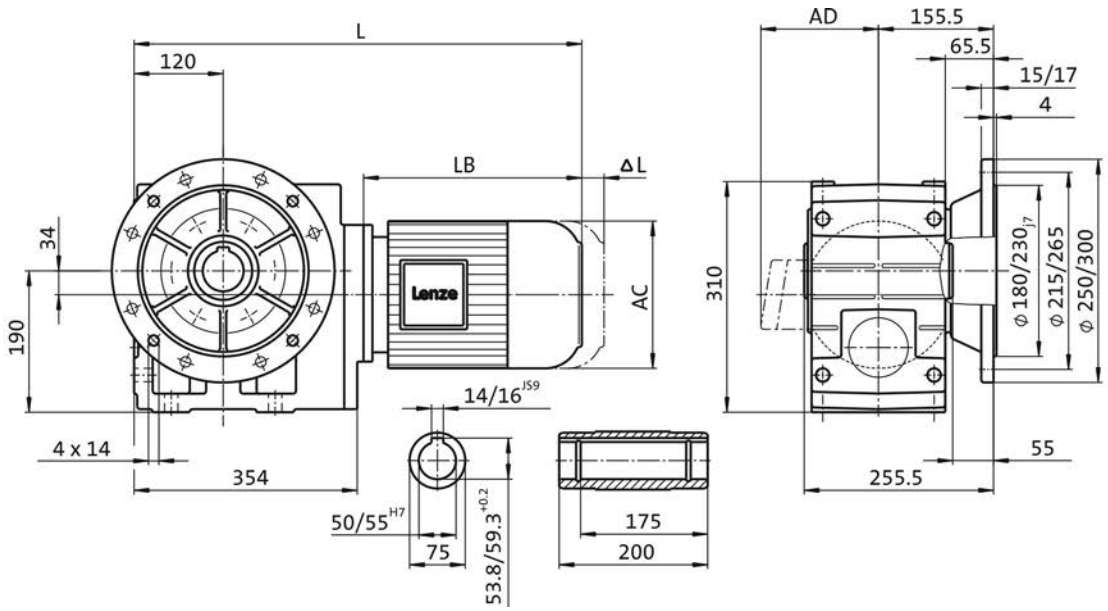

Product			m500	
			-P132L4	-P132M4
Dimensions				
Total length	**L**	**[mm]**	863	
Motor length	**LB**	**[mm]**	490	
Length of motor options	**Δ L**	**[mm]**	176	
Motor diameter	**AC**	**[mm]**	258	
Distance motor/connection	**AD**	**[mm]**	182	

Dimensions, 4-pole motors

GKS07, 3-stage gearboxes

Dimensions with solid shaft and foot (VBR)
Dimensions with solid shaft and foot, centering (VAR)

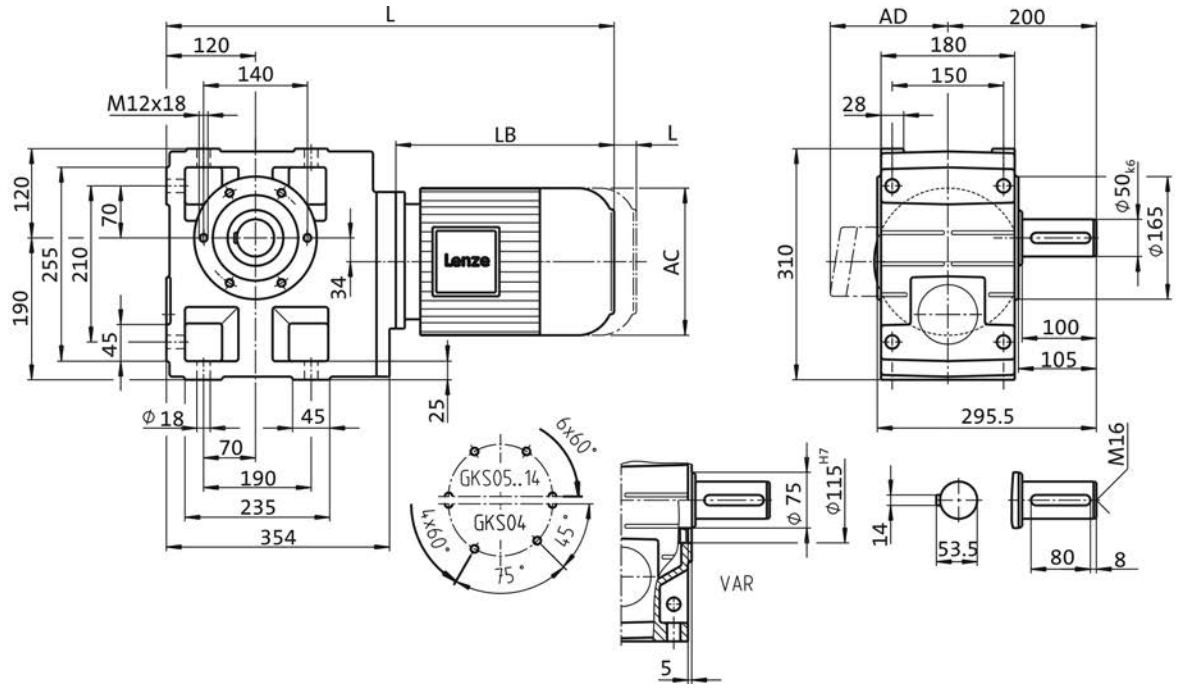

Product			m500	
			-P132L4	-P132M4
Dimensions				
Total length	**L**	**[mm]**	863	
Motor length	**LB**	**[mm]**	490	
Length of motor options	**Δ L**	**[mm]**	176	
Motor diameter	**AC**	**[mm]**	258	
Distance motor/connection	**AD**	**[mm]**	182	



Dimensions, 4-pole motors

GKS07, 3-stage gearboxes

Dimensions with solid shaft and foot, flange (VAK)

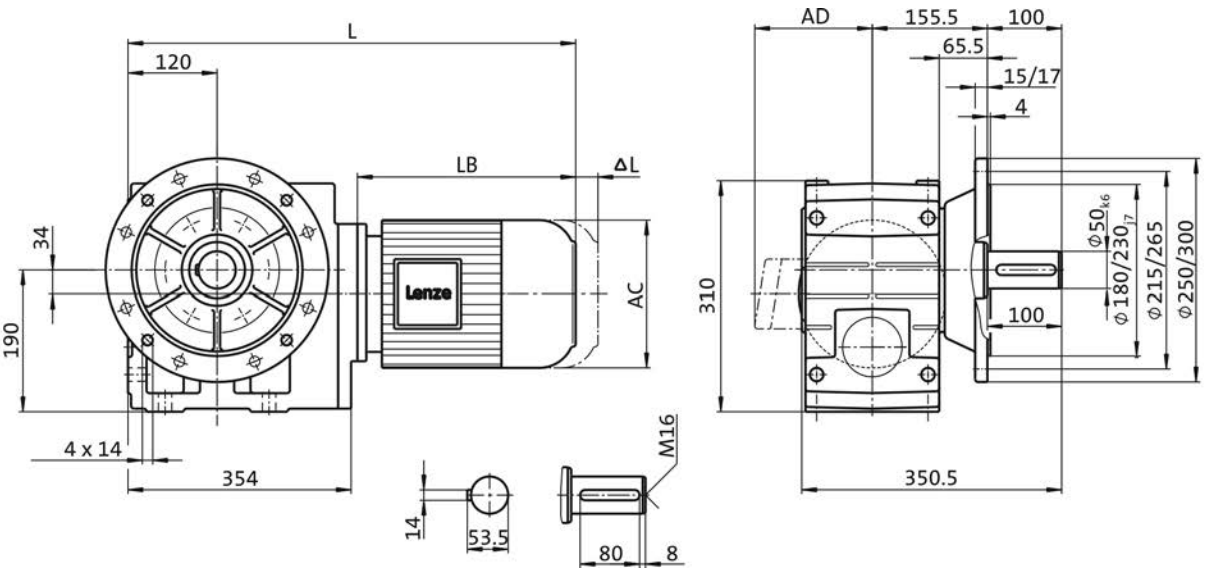

Product			m500	
			-P132L4	-P132M4
Dimensions				
Total length	**L**	**[mm]**	863	
Motor length	**LB**	**[mm]**	490	
Length of motor options	**Δ L**	**[mm]**	176	
Motor diameter	**AC**	**[mm]**	258	
Distance motor/connection	**AD**	**[mm]**	182	



Dimensions, 4-pole motors

GKS09, 3-stage gearboxes

Dimensions with hollow shaft and foot (HBR)
Dimensions with hollow shaft and foot, centering (HAR)

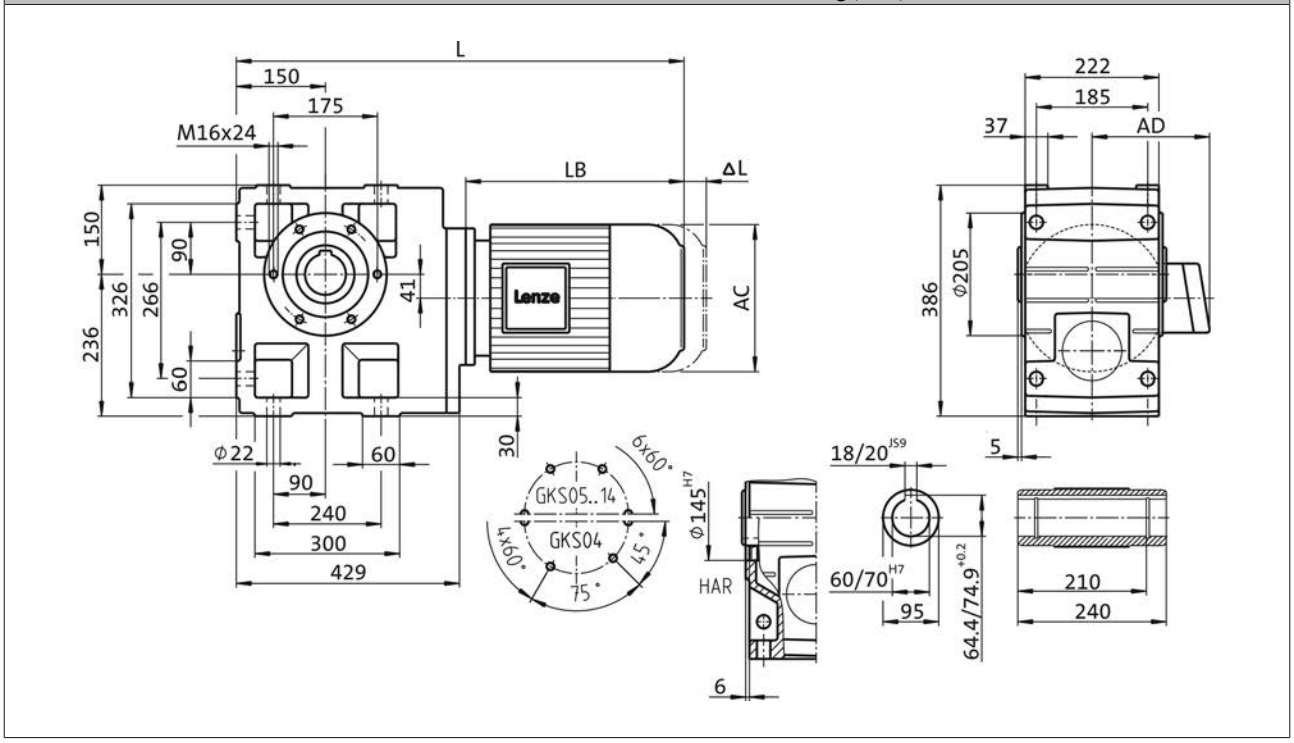

Product			m500			
			-P132L4	-P132M4	-P160L4	-P160M4
Dimensions						
Total length	**L**	**[mm]**	934		994	
Motor length	**LB**	**[mm]**	490		545	
Length of motor options	**Δ L**	**[mm]**	176		291	
Motor diameter	**AC**	**[mm]**	258		310	
Distance motor/connection	**AD**	**[mm]**	182		231	



Dimensions, 4-pole motors

GKS09, 3-stage gearboxes

Dimensions with hollow shaft and foot, flange (HAK)

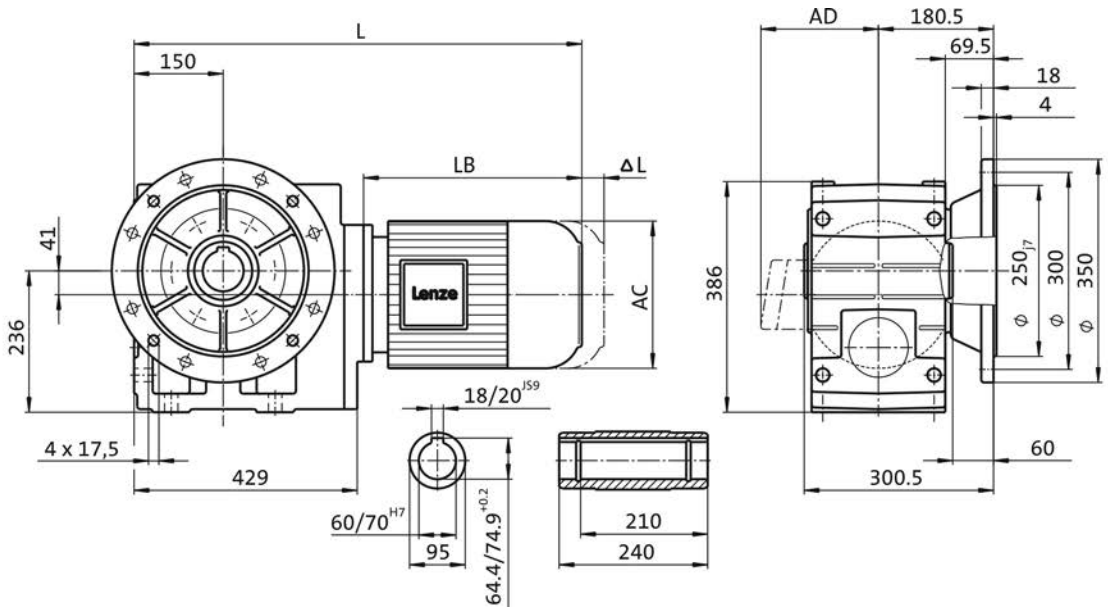

Product			m500			
			-P132L4	-P132M4	-P160L4	-P160M4
Dimensions						
Total length	**L**	**[mm]**	934		994	
Motor length	**LB**	**[mm]**	490		545	
Length of motor options	**Δ L**	**[mm]**	176		291	
Motor diameter	**AC**	**[mm]**	258		310	
Distance motor/connection	**AD**	**[mm]**	182		231	

Dimensions, 4-pole motors

GKS09, 3-stage gearboxes

Dimensions with solid shaft and foot (VBR)
Dimensions with solid shaft and foot, centering (VAR)

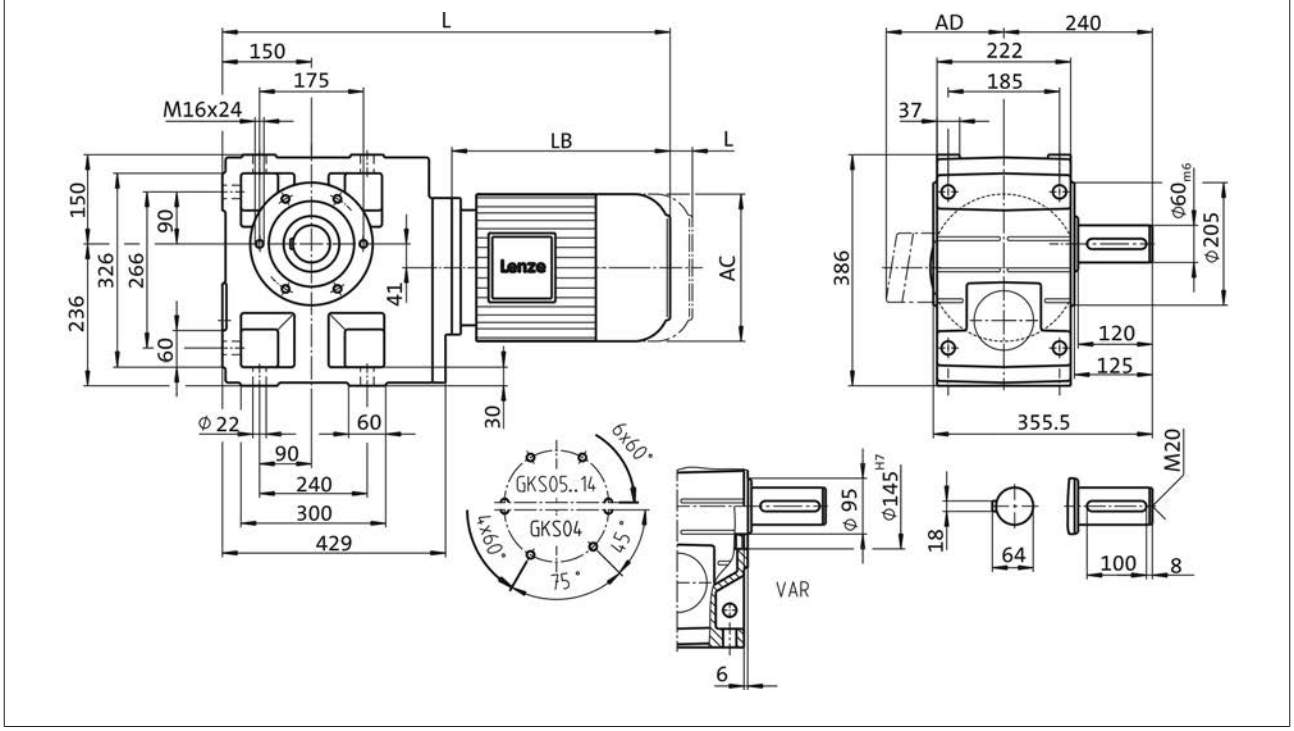

Product			m500			
			-P132L4	-P132M4	-P160L4	-P160M4
Dimensions						
Total length	**L**	**[mm]**	934		994	
Motor length	**LB**	**[mm]**	490		545	
Length of motor options	**Δ L**	**[mm]**	176		291	
Motor diameter	**AC**	**[mm]**	258		310	
Distance motor/connection	**AD**	**[mm]**	182		231	



Dimensions, 4-pole motors

GKS09, 3-stage gearboxes

Dimensions with solid shaft and foot, flange (VAK)

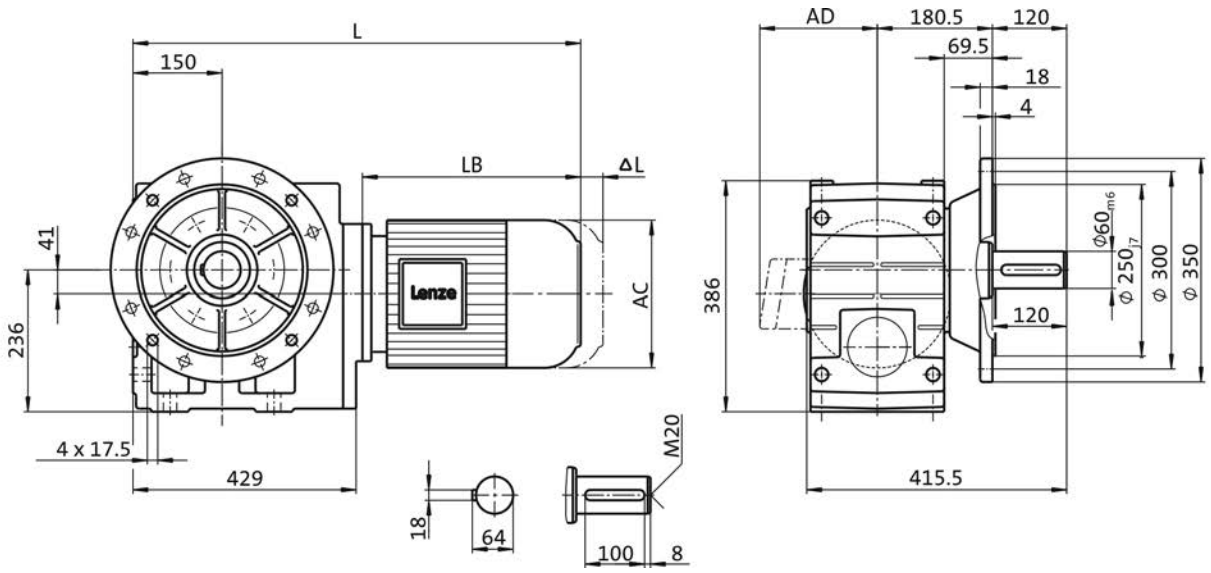

Product			m500			
			-P132L4	-P132M4	-P160L4	-P160M4
Dimensions						
Total length	**L**	**[mm]**	934		994	
Motor length	**LB**	**[mm]**	490		545	
Length of motor options	**Δ L**	**[mm]**	176		291	
Motor diameter	**AC**	**[mm]**	258		310	
Distance motor/connection	**AD**	**[mm]**	182		231	



Dimensions, 4-pole motors

GKS09, 4-stage gearboxes

Dimensions with hollow shaft and foot (HBR)
Dimensions with hollow shaft and foot, centering (HAR)

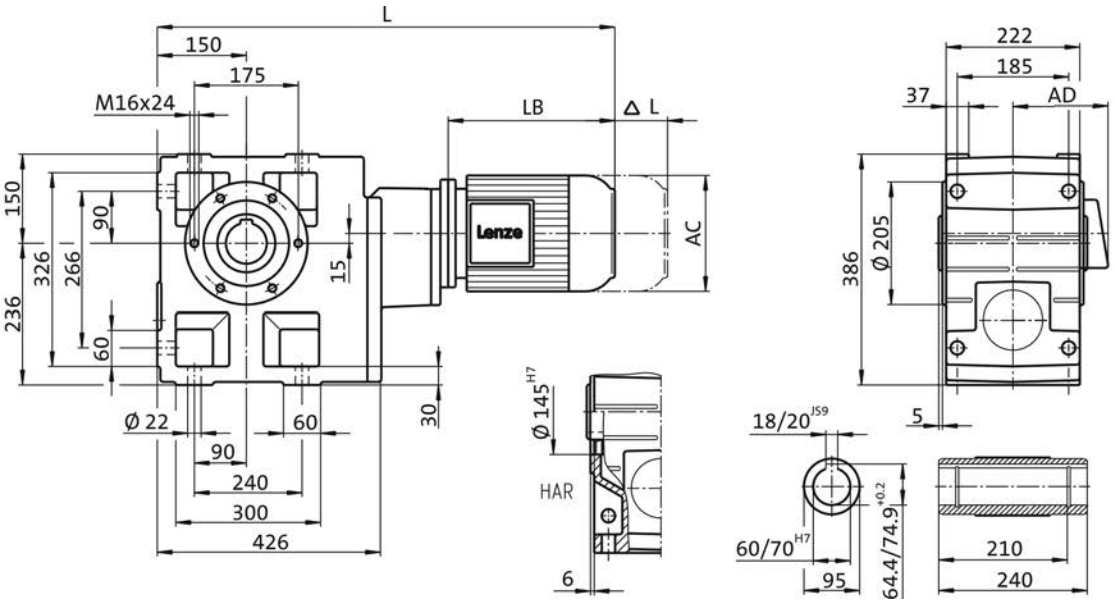

Product			m500
			-P132M4
Dimensions			
Total length	**L**	**[mm]**	1056
Motor length	**LB**	**[mm]**	490
Length of motor options	**Δ L**	**[mm]**	176
Motor diameter	**AC**	**[mm]**	258
Distance motor/connection	**AD**	**[mm]**	182



Dimensions, 4-pole motors

GKS09, 4-stage gearboxes

Dimensions with hollow shaft and foot, flange (HAK)

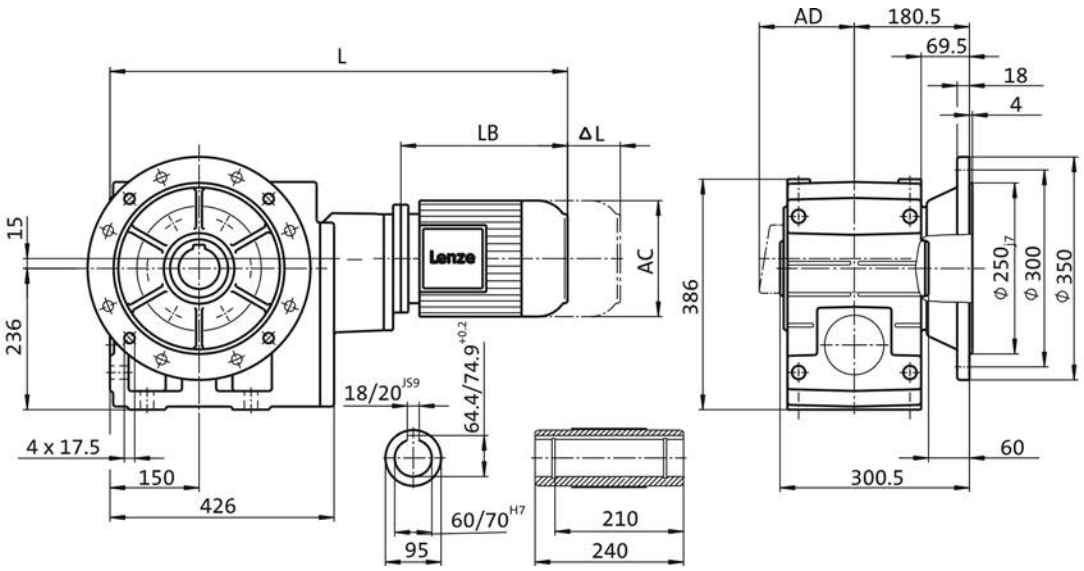

Product			m500
			-P132M4
Dimensions			
Total length	**L**	**[mm]**	1056
Motor length	**LB**	**[mm]**	490
Length of motor options	**Δ L**	**[mm]**	176
Motor diameter	**AC**	**[mm]**	258
Distance motor/connection	**AD**	**[mm]**	182



Dimensions, 4-pole motors

GKS09, 4-stage gearboxes

Dimensions with solid shaft and foot (VBR)
Dimensions with solid shaft and foot, centering (VAR)

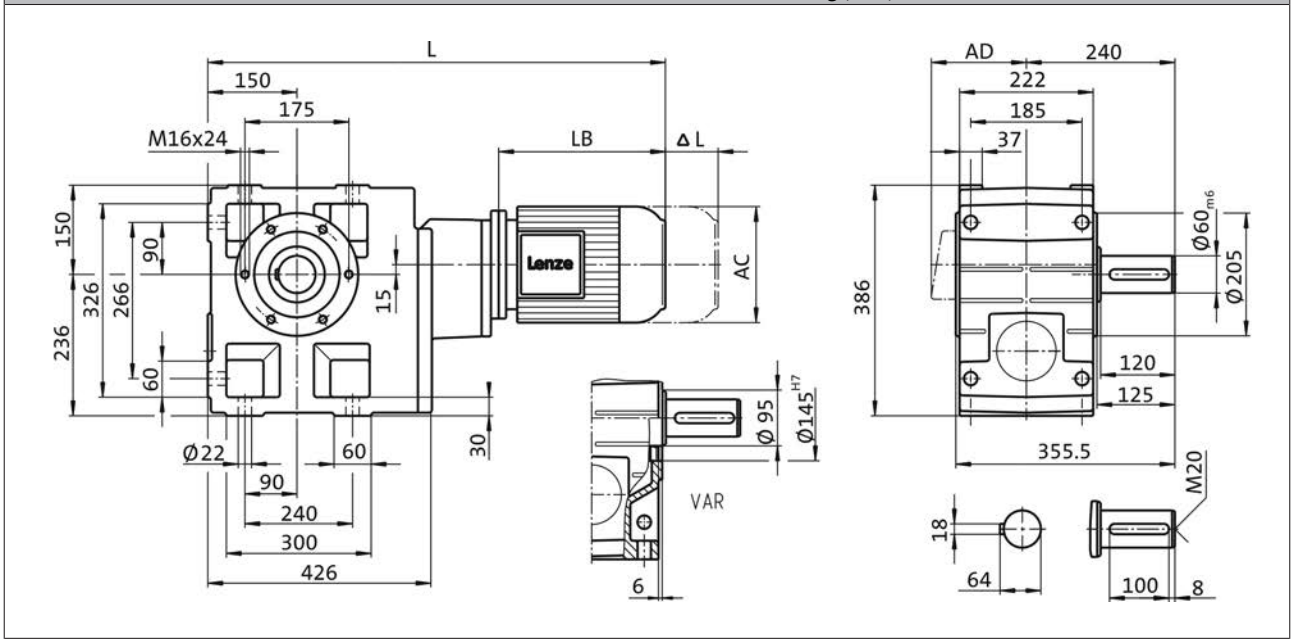

Product			m500
			-P132M4
Dimensions			
Total length	**L**	**[mm]**	1056
Motor length	**LB**	**[mm]**	490
Length of motor options	**Δ L**	**[mm]**	176
Motor diameter	**AC**	**[mm]**	258
Distance motor/connection	**AD**	**[mm]**	182



Dimensions, 4-pole motors

GKS09, 4-stage gearboxes

Dimensions with solid shaft and foot, flange (VAK)

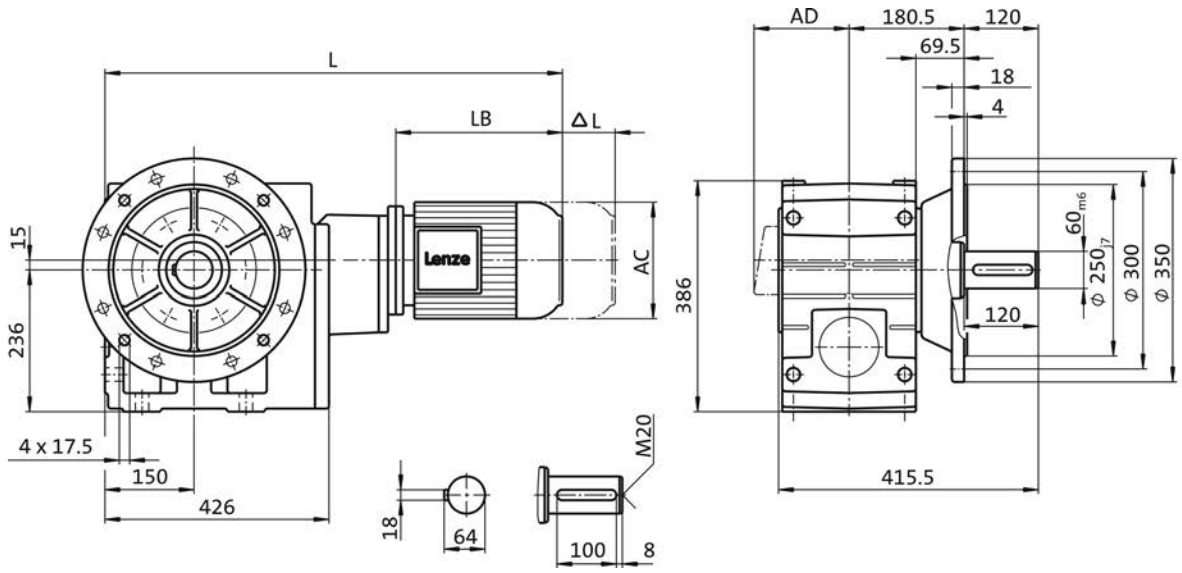

Product			m500
			-P132M4
Dimensions			
Total length	**L**	**[mm]**	1056
Motor length	**LB**	**[mm]**	490
Length of motor options	**Δ L**	**[mm]**	176
Motor diameter	**AC**	**[mm]**	258
Distance motor/connection	**AD**	**[mm]**	182



Dimensions, 4-pole motors

GKS11, 3-stage gearboxes

Dimensions with hollow shaft and foot (HBR)
Dimensions with hollow shaft and foot, centering (HAR)

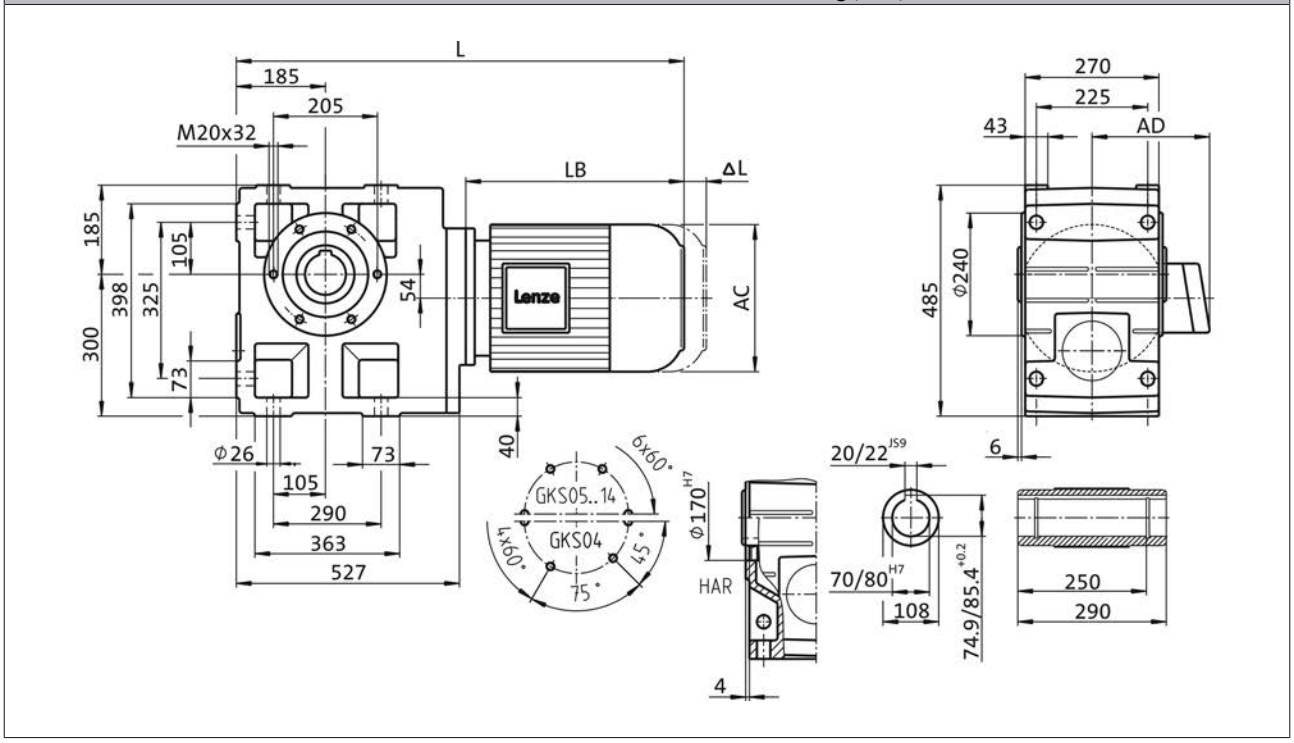

Product			m500					
			-P132L4	-P132M4	-P160L4	-P160M4	-P180L4	-P180M4
Dimensions								
Total length	**L**	**[mm]**	1025		1085		1140	
Motor length	**LB**	**[mm]**	490		545		600	
Length of motor options	**Δ L**	**[mm]**	176		291		248	
Motor diameter	**AC**	**[mm]**	258		310		281	
Distance motor/connection	**AD**	**[mm]**	182		231		282	



Dimensions, 4-pole motors

GKS11, 3-stage gearboxes

Dimensions with hollow shaft and foot, flange (HAK)

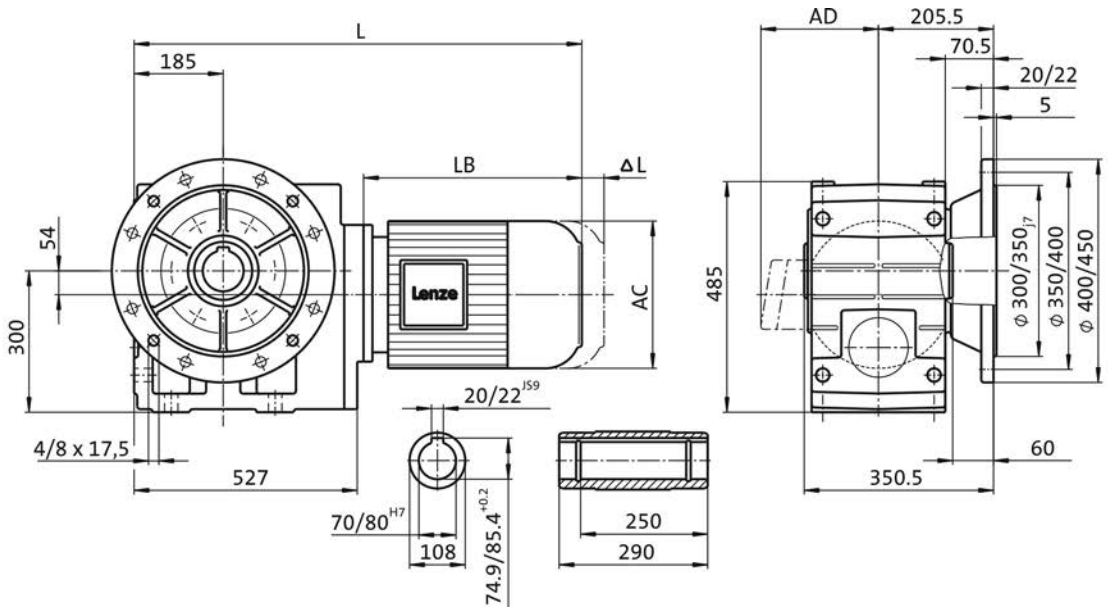

Product			m500					
			-P132L4	-P132M4	-P160L4	-P160M4	-P180L4	-P180M4
Dimensions								
Total length	**L**	**[mm]**	1025		1085		1140	
Motor length	**LB**	**[mm]**	490		545		600	
Length of motor options	**Δ L**	**[mm]**	176		291		248	
Motor diameter	**AC**	**[mm]**	258		310		281	
Distance motor/connection	**AD**	**[mm]**	182		231		282	



Dimensions, 4-pole motors

GKS11, 3-stage gearboxes

Dimensions with solid shaft and foot (VBR)
Dimensions with solid shaft and foot, centering (VAR)

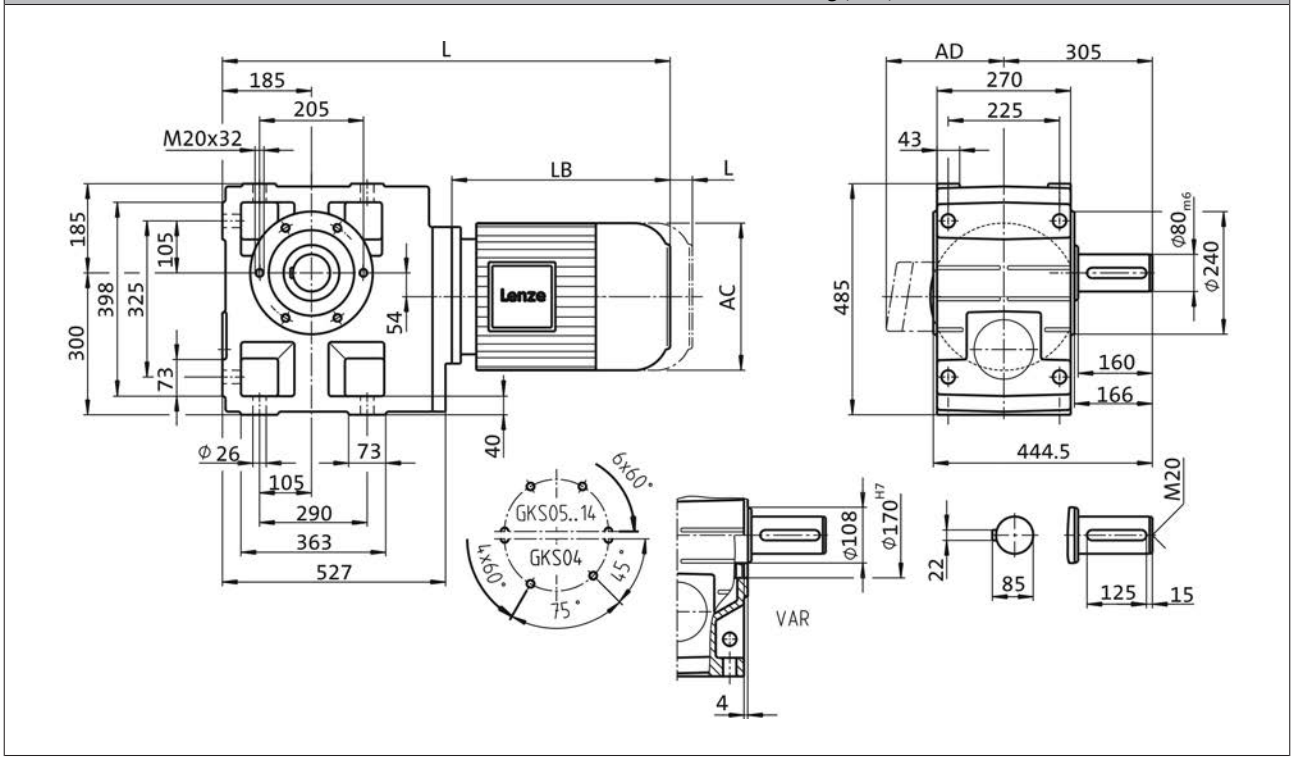

Product			m500					
			-P132L4	-P132M4	-P160L4	-P160M4	-P180L4	-P180M4
Dimensions								
Total length	**L**	**[mm]**	1025		1085		1140	
Motor length	**LB**	**[mm]**	490		545		600	
Length of motor options	**Δ L**	**[mm]**	176		291		248	
Motor diameter	**AC**	**[mm]**	258		310		281	
Distance motor/connection	**AD**	**[mm]**	182		231		282	



Dimensions, 4-pole motors

GKS11, 3-stage gearboxes

Dimensions with solid shaft and foot, flange (VAK)

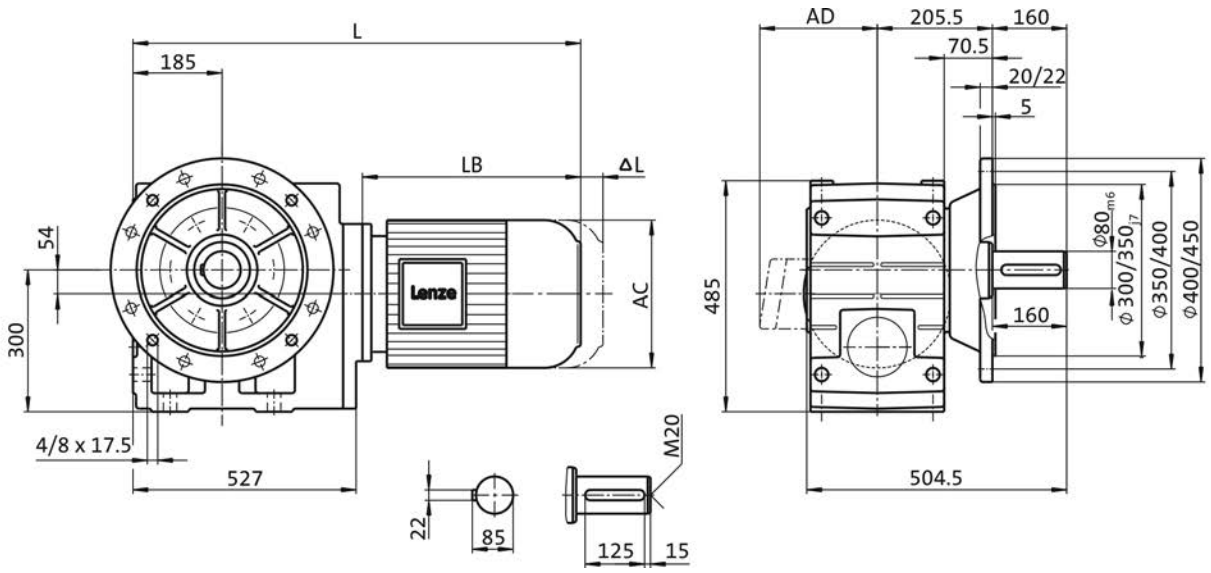

Product			m500					
			-P132L4	-P132M4	-P160L4	-P160M4	-P180L4	-P180M4
Dimensions								
Total length	**L**	**[mm]**	1025		1085		1140	
Motor length	**LB**	**[mm]**	490		545		600	
Length of motor options	**Δ L**	**[mm]**	176		291		248	
Motor diameter	**AC**	**[mm]**	258		310		281	
Distance motor/connection	**AD**	**[mm]**	182		231		282	



Dimensions, 4-pole motors

GKS11, 4-stage gearboxes

Dimensions with hollow shaft and foot (HBR)
Dimensions with hollow shaft and foot, centering (HAR)

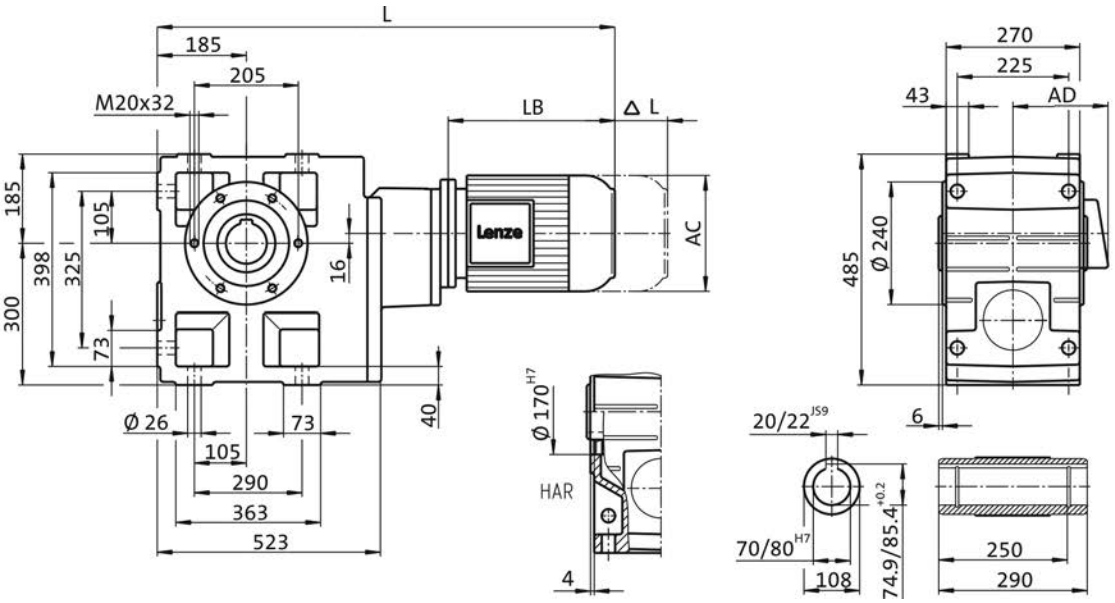

Product			m500	
			-P132L4	-P132M4
Dimensions				
Total length	**L**	**[mm]**	1166	
Motor length	**LB**	**[mm]**	490	
Length of motor options	**Δ L**	**[mm]**	176	
Motor diameter	**AC**	**[mm]**	258	
Distance motor/connection	**AD**	**[mm]**	182	



Dimensions, 4-pole motors

GKS11, 4-stage gearboxes

Dimensions with hollow shaft and foot, flange (HAK)

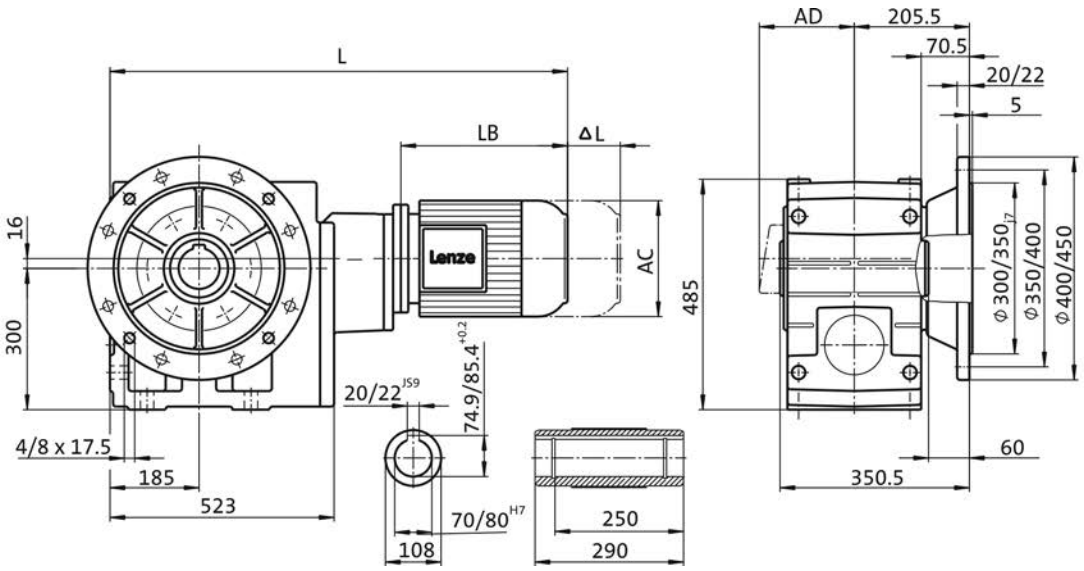

Product			m500	
			-P132L4	-P132M4
Dimensions				
Total length	**L**	**[mm]**	1166	
Motor length	**LB**	**[mm]**	490	
Length of motor options	**Δ L**	**[mm]**	176	
Motor diameter	**AC**	**[mm]**	258	
Distance motor/connection	**AD**	**[mm]**	182	



Dimensions, 4-pole motors

GKS11, 4-stage gearboxes

Dimensions with solid shaft and foot (VBR)
Dimensions with solid shaft and foot, centering (VAR)

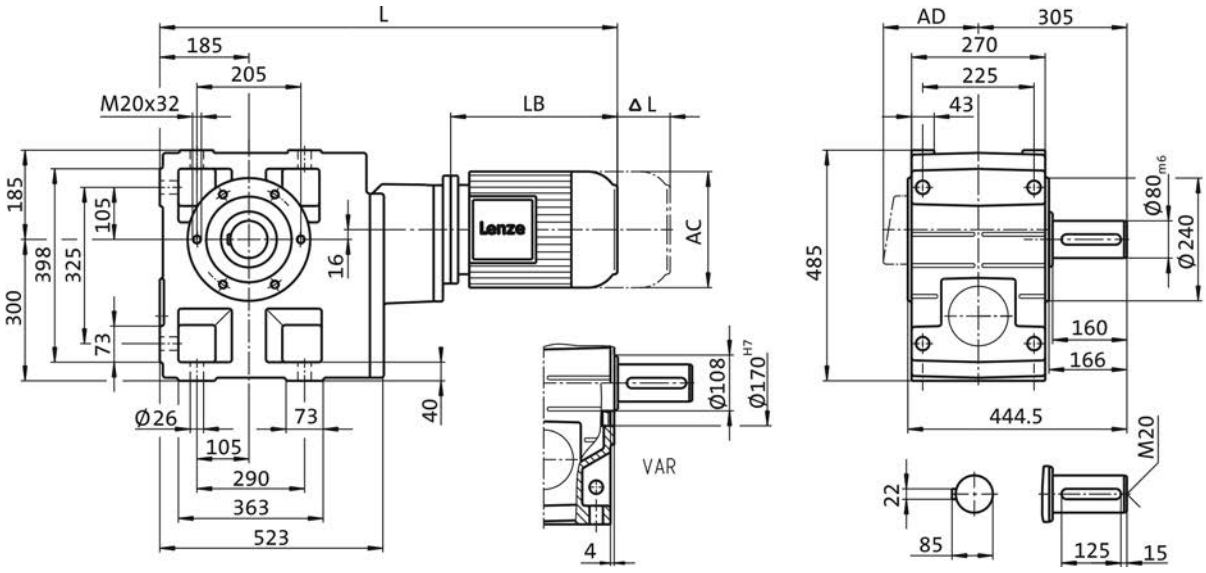

Product			m500	
			-P132L4	-P132M4
Dimensions				
Total length	**L**	**[mm]**	1166	
Motor length	**LB**	**[mm]**	490	
Length of motor options	**Δ L**	**[mm]**	176	
Motor diameter	**AC**	**[mm]**	258	
Distance motor/connection	**AD**	**[mm]**	182	



Dimensions, 4-pole motors

GKS11, 4-stage gearboxes

Dimensions with solid shaft and foot, flange (VAK)

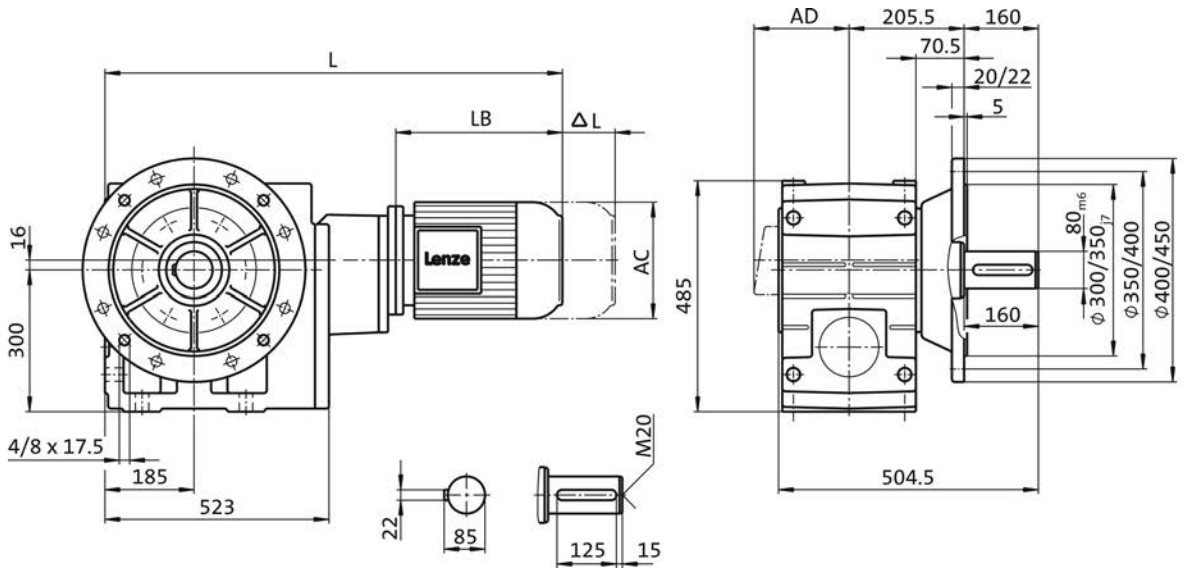

Product			m500	
			-P132L4	-P132M4
Dimensions				
Total length	**L**	**[mm]**	1166	
Motor length	**LB**	**[mm]**	490	
Length of motor options	**Δ L**	**[mm]**	176	
Motor diameter	**AC**	**[mm]**	258	
Distance motor/connection	**AD**	**[mm]**	182	

Dimensions, 4-pole motors

GKS14, 3-stage gearboxes

Dimensions with hollow shaft and foot (HBR)
Dimensions with hollow shaft and foot, centering (HAR)

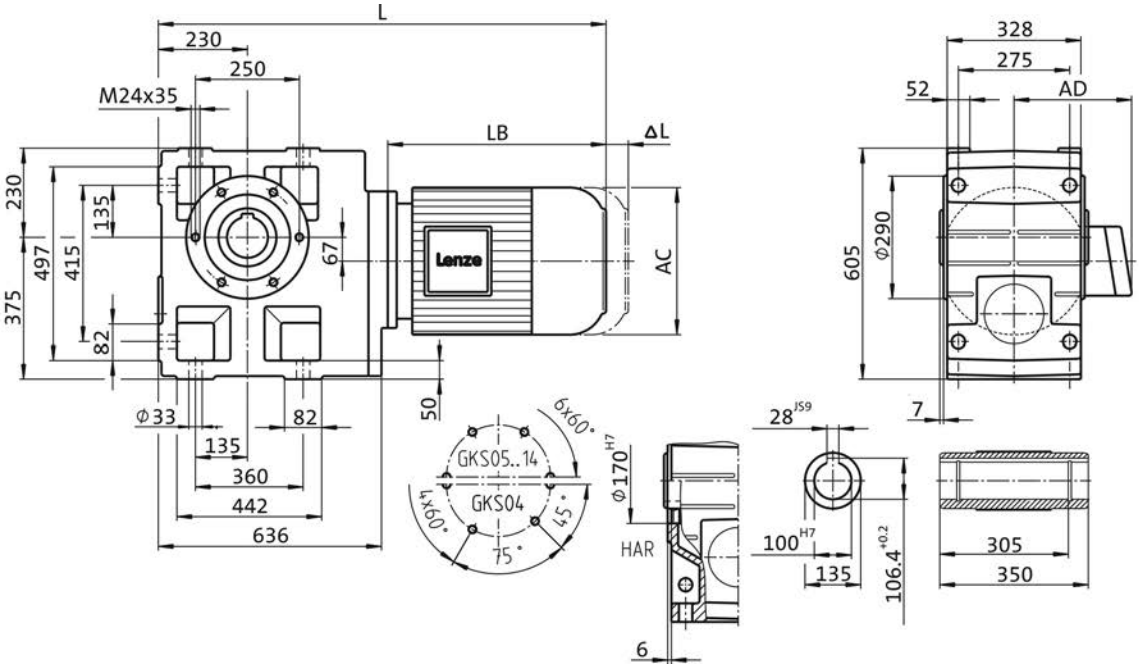

Product			m500						
			-P132L4	-P132M4	-P160L4	-P160M4	-P180L4	-P180M4	-P180V4
Dimensions									
Total length	**L**	**[mm]**	1124		1184		1239		1287
Motor length	**LB**	**[mm]**	490		545		600		648
Length of motor options	**Δ L**	**[mm]**	176		291		248		
Motor diameter	**AC**	**[mm]**	258		310		281		
Distance motor/connection	**AD**	**[mm]**	182		231		282		



Dimensions, 4-pole motors

GKS14, 3-stage gearboxes

Dimensions with hollow shaft and foot, flange (HAK)

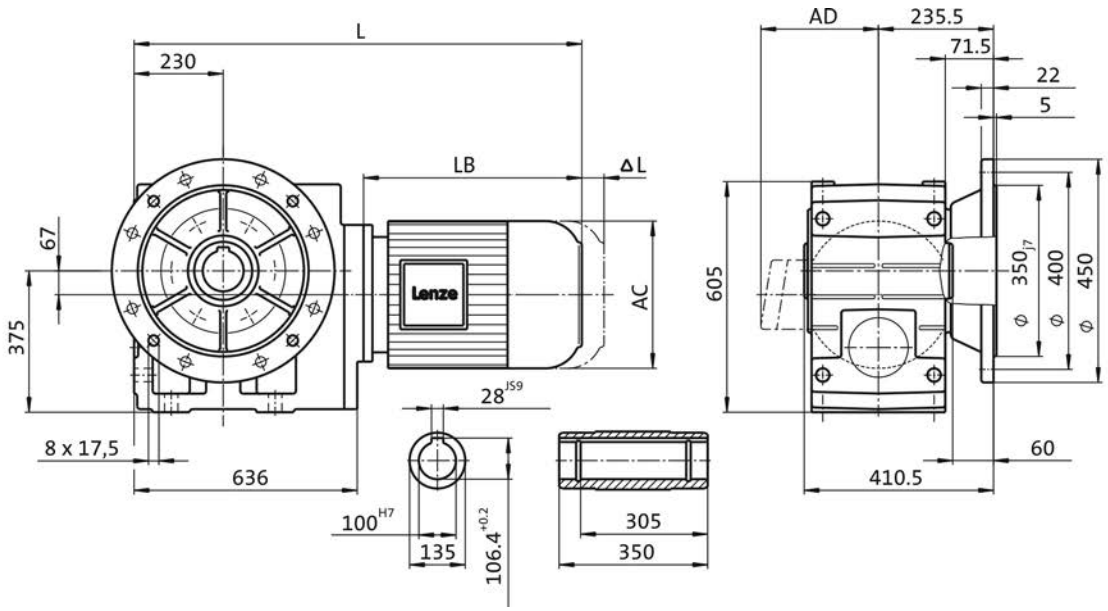

Product			m500						
			-P132L4	-P132M4	-P160L4	-P160M4	-P180L4	-P180M4	-P180V4
Dimensions									
Total length	**L**	**[mm]**	1124		1184		1239		1287
Motor length	**LB**	**[mm]**	490		545		600		648
Length of motor options	**Δ L**	**[mm]**	176		291		248		
Motor diameter	**AC**	**[mm]**	258		310		281		
Distance motor/connection	**AD**	**[mm]**	182		231		282		



Dimensions, 4-pole motors

GKS14, 3-stage gearboxes

Dimensions with solid shaft and foot (VBR)
Dimensions with solid shaft and foot, centering (VAR)

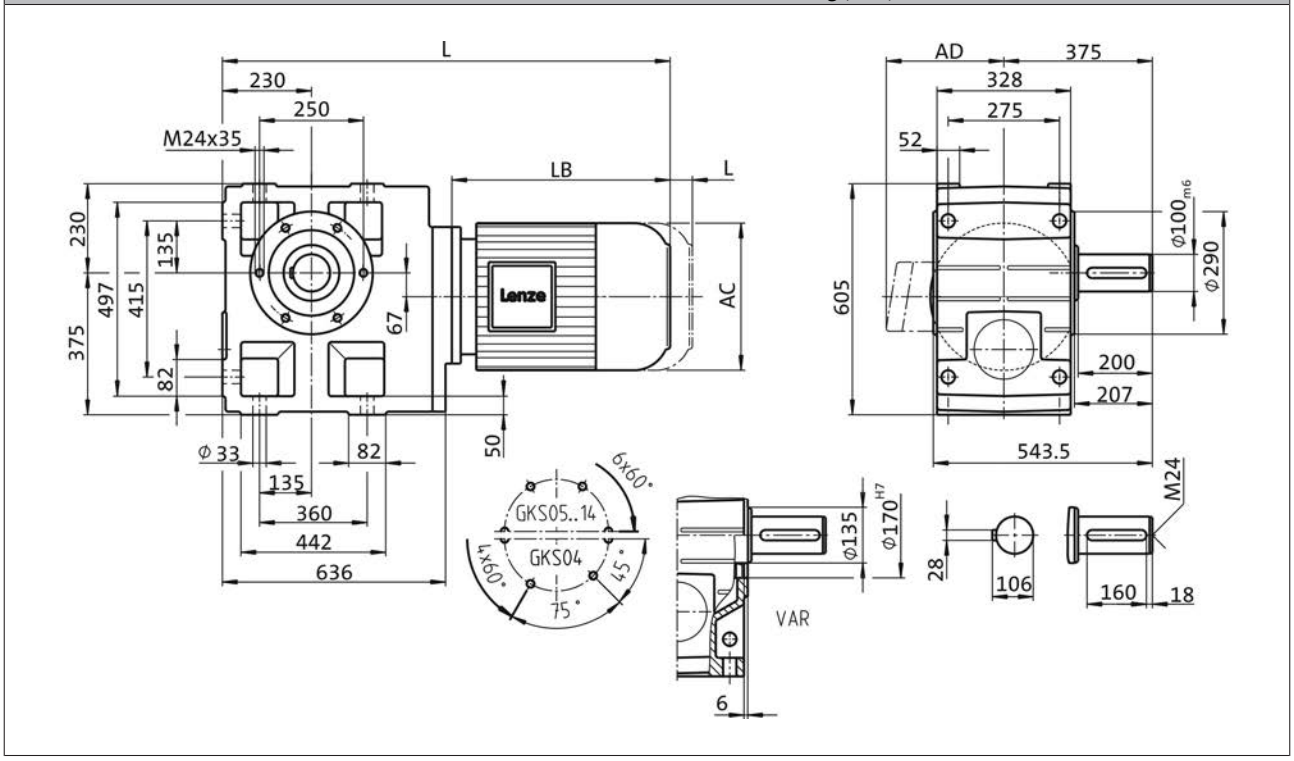

Product			m500						
			-P132L4	-P132M4	-P160L4	-P160M4	-P180L4	-P180M4	-P180V4
Dimensions									
Total length	**L**	**[mm]**	1124		1184		1239		1287
Motor length	**LB**	**[mm]**	490		545		600		648
Length of motor options	**Δ L**	**[mm]**	176		291		248		
Motor diameter	**AC**	**[mm]**	258		310		281		
Distance motor/connection	**AD**	**[mm]**	182		231		282		



Dimensions, 4-pole motors

GKS14, 3-stage gearboxes

Dimensions with solid shaft and foot, flange (VAK)

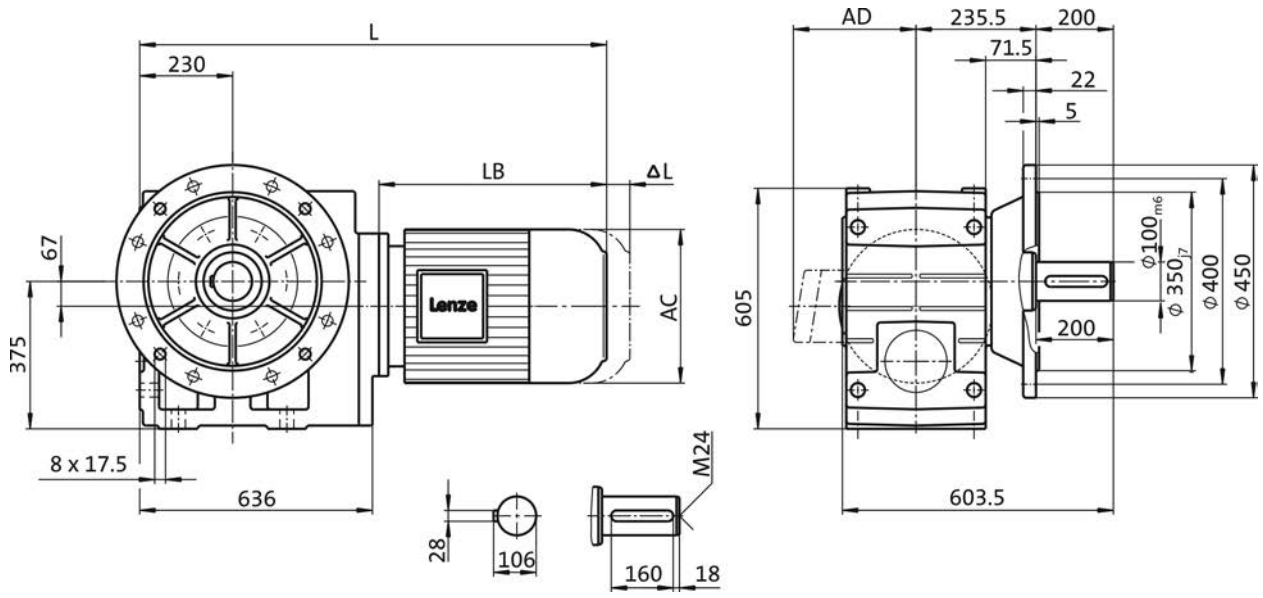

Product			m500						
			-P132L4	-P132M4	-P160L4	-P160M4	-P180L4	-P180M4	-P180V4
Dimensions									
Total length	**L**	**[mm]**	1124		1184		1239		1287
Motor length	**LB**	**[mm]**	490		545		600		648
Length of motor options	**Δ L**	**[mm]**	176		291		248		
Motor diameter	**AC**	**[mm]**	258		310		281		
Distance motor/connection	**AD**	**[mm]**	182		231		282		



Dimensions, 4-pole motors

GKS14, 4-stage gearboxes

Dimensions with hollow shaft and foot (HBR)
Dimensions with hollow shaft and foot, centering (HAR)

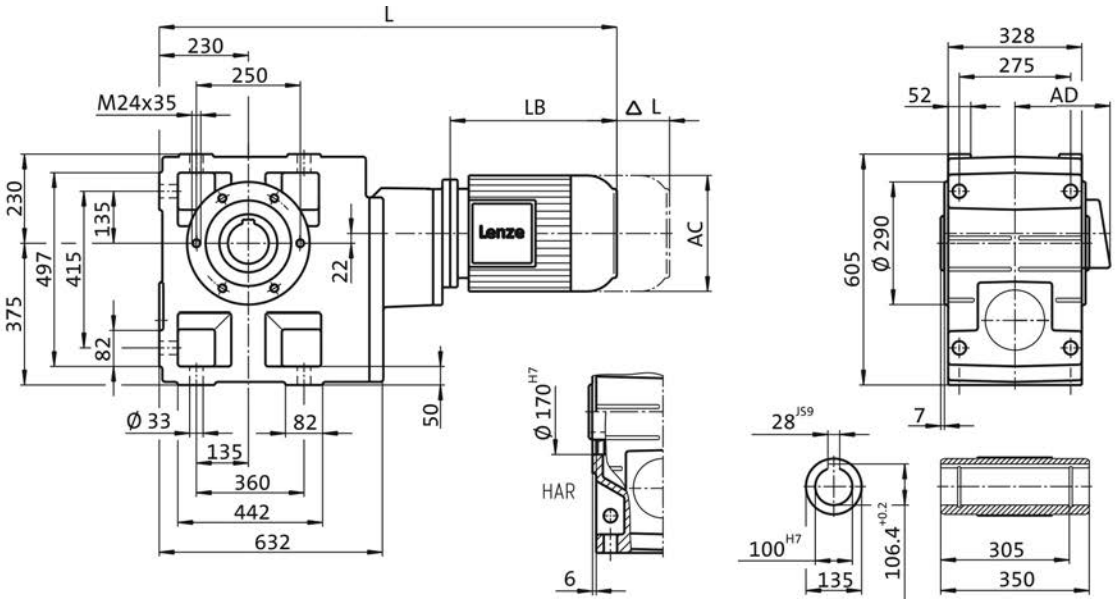

Product			m500					
			-P132L4	-P132M4	-P160L4	-P160M4	-P180L4	-P180M4
Dimensions								
Total length	**L**	**[mm]**	1299		1359		1414	
Motor length	**LB**	**[mm]**	490		545		600	
Length of motor options	**Δ L**	**[mm]**	176		291		248	
Motor diameter	**AC**	**[mm]**	258		310		281	
Distance motor/connection	**AD**	**[mm]**	182		231		282	



Dimensions, 4-pole motors

GKS14, 4-stage gearboxes

Dimensions with hollow shaft and foot, flange (HAK)

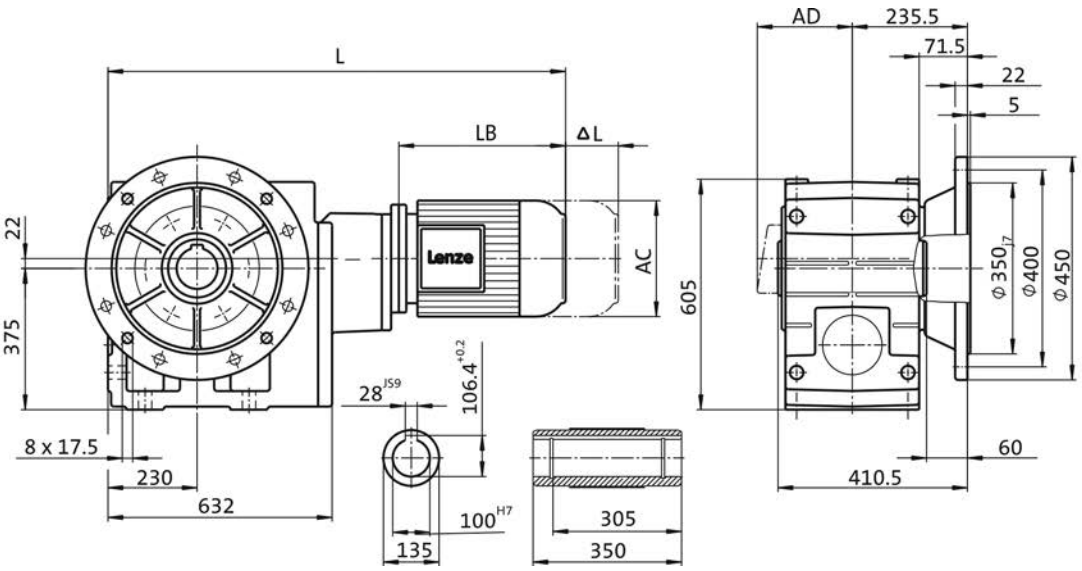

Product			m500					
			-P132L4	-P132M4	-P160L4	-P160M4	-P180L4	-P180M4
Dimensions								
Total length	**L**	**[mm]**	1299		1359		1414	
Motor length	**LB**	**[mm]**	490		545		600	
Length of motor options	**Δ L**	**[mm]**	176		291		248	
Motor diameter	**AC**	**[mm]**	258		310		281	
Distance motor/connection	**AD**	**[mm]**	182		231		282	



Dimensions, 4-pole motors

GKS14, 4-stage gearboxes

Dimensions with solid shaft and foot (VBR)
Dimensions with solid shaft and foot, centering (VAR)

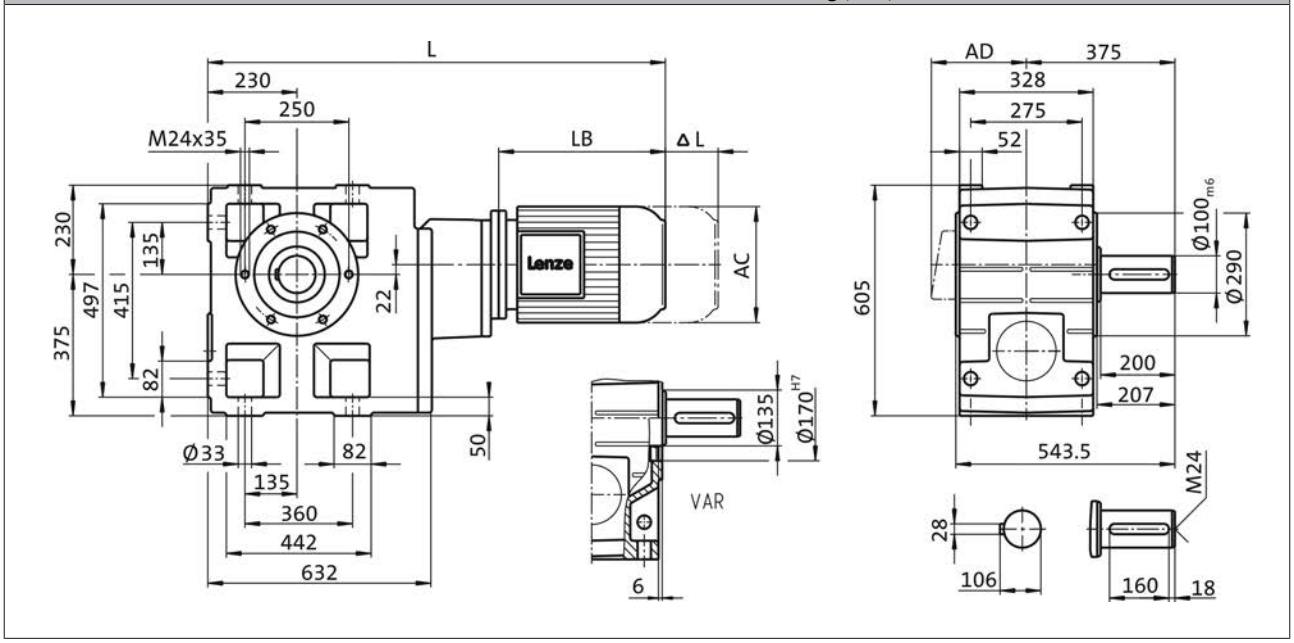

Product			m500					
			-P132L4	-P132M4	-P160L4	-P160M4	-P180L4	-P180M4
Dimensions								
Total length	**L**	**[mm]**	1299		1359		1414	
Motor length	**LB**	**[mm]**	490		545		600	
Length of motor options	**Δ L**	**[mm]**	176		291		248	
Motor diameter	**AC**	**[mm]**	258		310		281	
Distance motor/connection	**AD**	**[mm]**	182		231		282	



Dimensions, 4-pole motors

GKS14, 4-stage gearboxes

Dimensions with solid shaft and foot, flange (VAK)

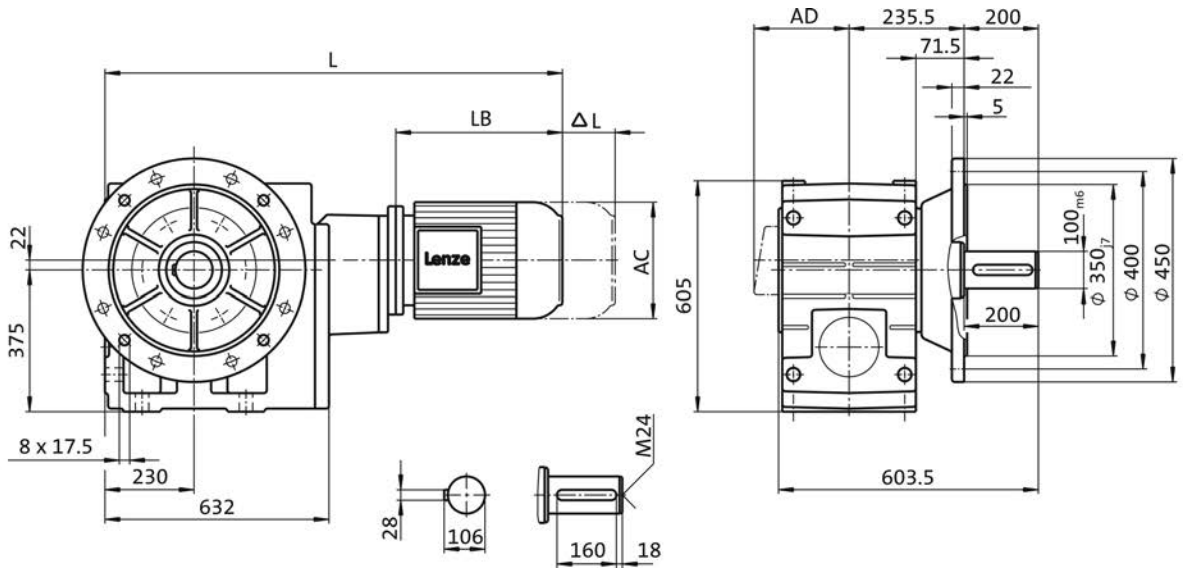

Product			m500					
			-P132L4	-P132M4	-P160L4	-P160M4	-P180L4	-P180M4
Dimensions								
Total length	**L**	**[mm]**	1299		1359		1414	
Motor length	**LB**	**[mm]**	490		545		600	
Length of motor options	**Δ L**	**[mm]**	176		291		248	
Motor diameter	**AC**	**[mm]**	258		310		281	
Distance motor/connection	**AD**	**[mm]**	182		231		282	





Hollow shaft with shrink disc

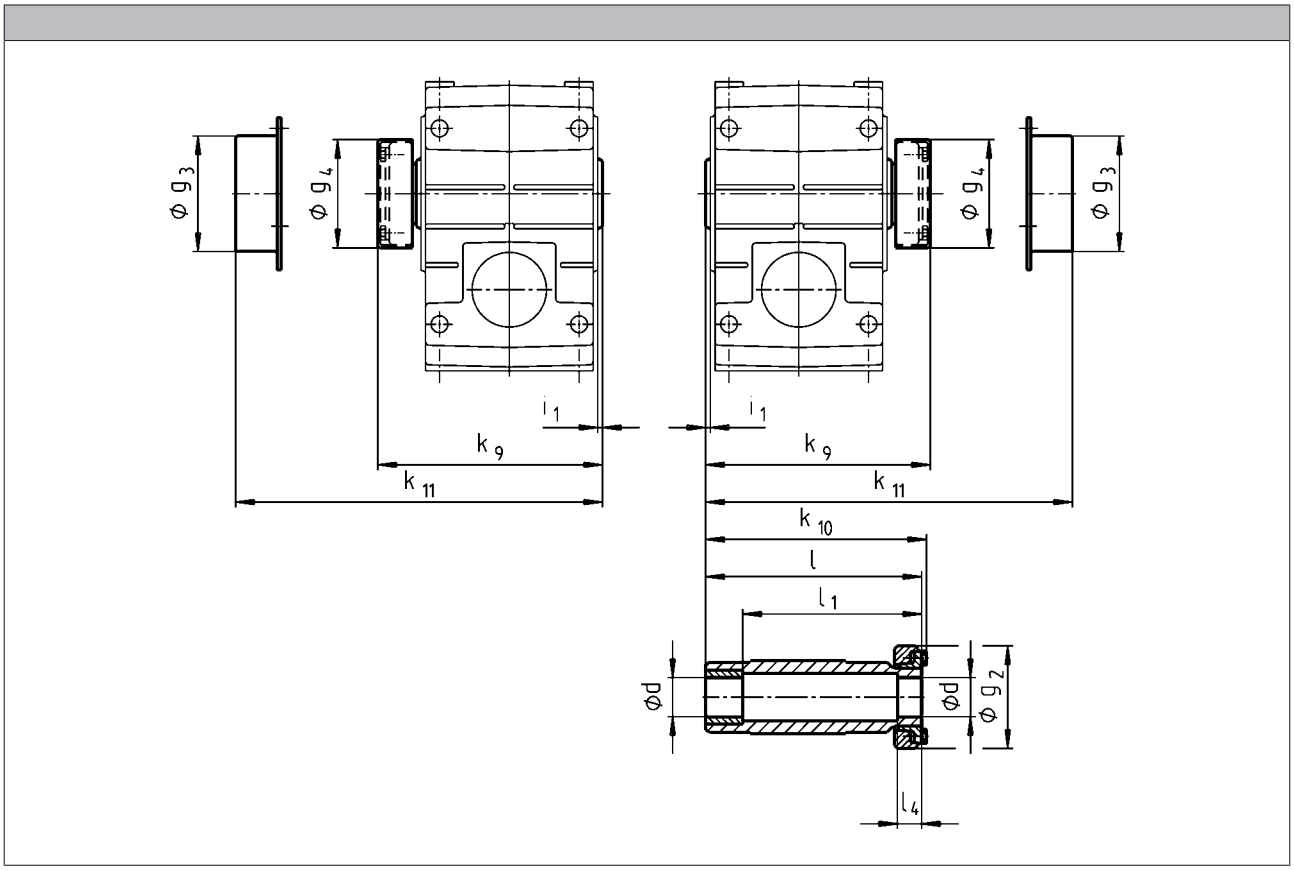

	d	g2	g3	g4	i1	k9	k10	k11	l	l1	l4
	h6										
GKS04	25 30	72	79	76	2.5	150	148	154	142	122	26
GKS05	35	80	90	84	4.0	176	174	179	168	148	28
GKS06	40	90	100	94	5.0	202	200	204	194	164	30
GKS07	50	110	124	116		241	238	244	232	192	26
GKS09	65	141	159	147		288	285	287	278	228	30
GKS11	80	170	191	176	6.0	347	344	349	338	238	42
GKS14	100	215	253	221	7.0	418	415	421	407	307	55

► Output flange and hollow shaft with shrink disc (output version SAK) are not possible in the same location. For additional dimensions see output version H□□.

► Ensure that the strength of the machine shaft material is adequate in shrink disc designs.
When using typical steels, e.g. C45, 42CrMo4, the torques listed in the selection tables can be used without restriction.
Please consult us if you wish to use material that is considerably weaker. Medium surface roughness Rz must not exceed 15 µm (turning is sufficient).



Mounting set for hollow shaft circlip:
Proposed design for auxiliary tools

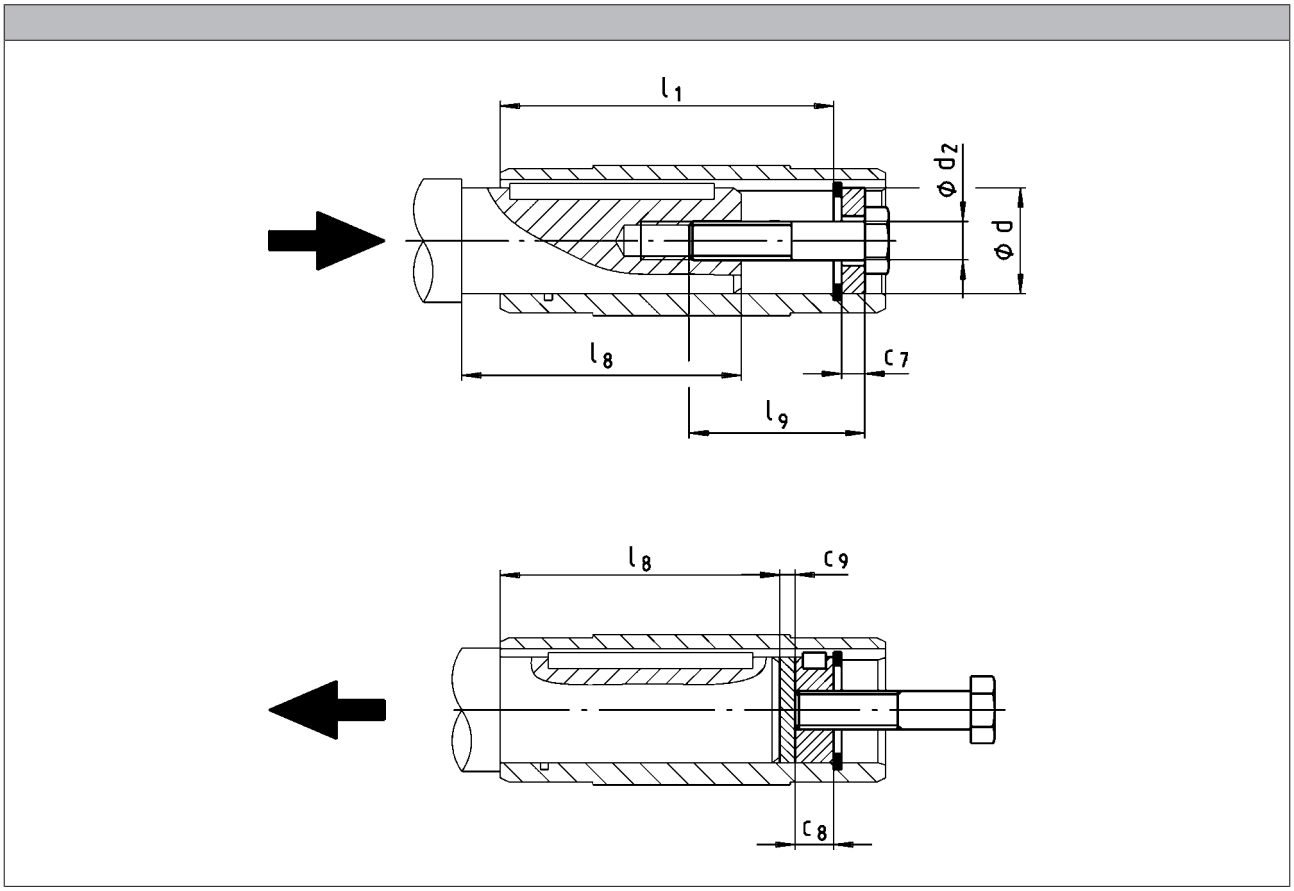

	d	l_1	d_2	l_9	c_7	c_8	c_9	$l_{8,\,max}$
	H7							
GKS04	25 30	100	M10	40	5	10	3	85
					6			
GKS05	30 35	124						107
			M12	50	7	12		
GKS06	40 45	140	M16	60	8	16	4	118
					9			
GKS07	50 55	175			10		5	148
			M20	80	11	20		
GKS09	60 70	210			13			182
					14			
GKS11	70 80	250					6	221
					16			
GKS14	100	305	M24	100	20	24	8	270

6.4



Hoseproof hollow shaft cover

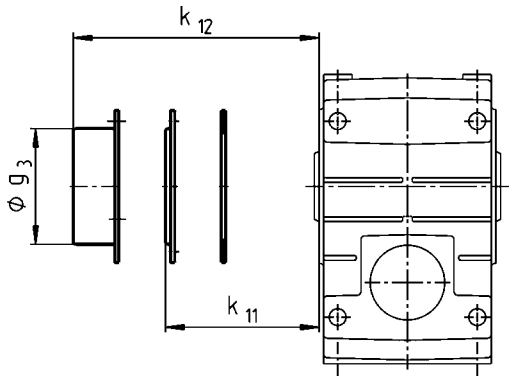

► Cover including gasket

	k_{11}	k_{12}	g_3
GKS04	9		
GKS05	10		
GKS06	11		
GKS07			
GKS09		54	159
GKS11		67	191
GKS14		80	253



Gearboxes with 2nd output shaft end

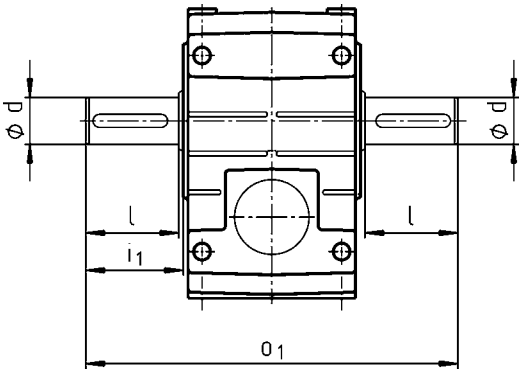

	d	d	l	i_1	o_1
	k6	m6			
GKS04	25		50	52.5	215
GKS05	30		60	64.0	260
GKS06	40		80	85.0	320
GKS07	50		100	105.0	400
GKS09		60	120	125.0	480
GKS11		80	160	166.0	610
GKS14		100	200	207.0	750



Torque plate on threaded pitch circle

In position 3

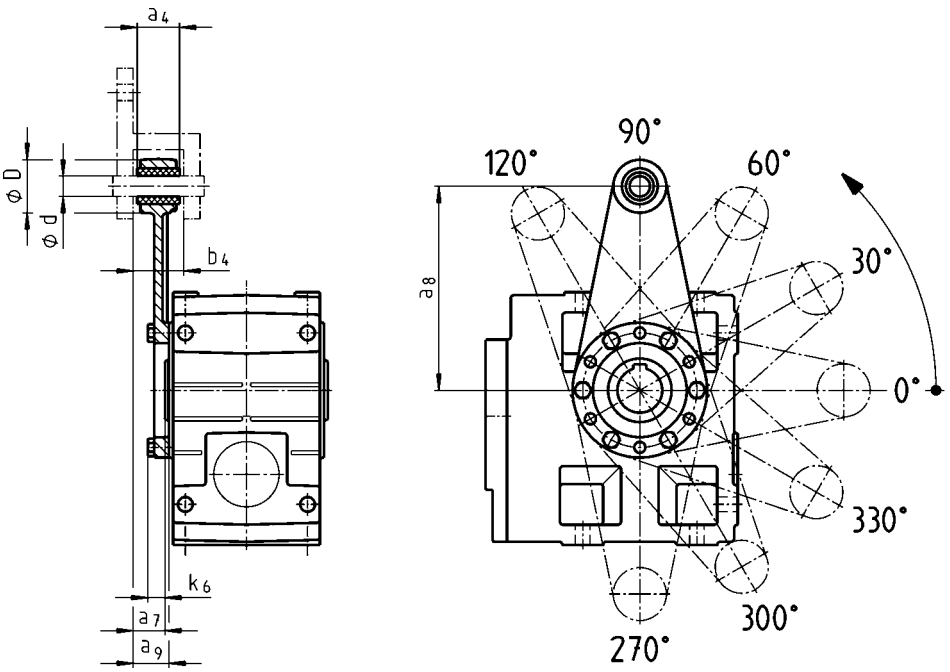

In position 5

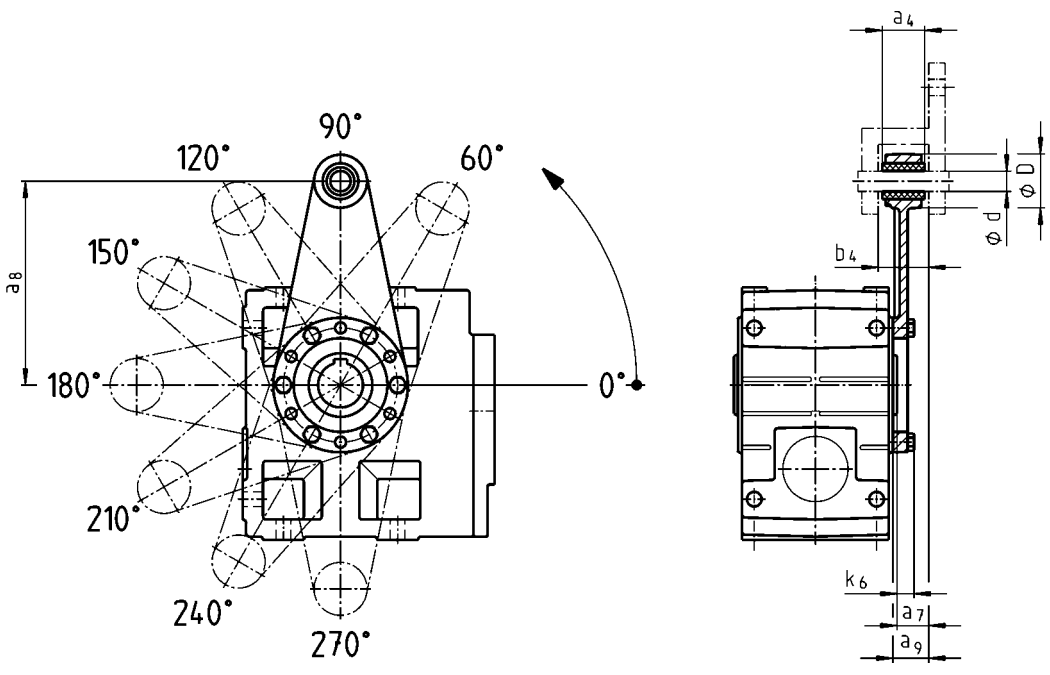

	a_4	a_7	a_8	a_9	b_4	d	D	k_6
GKS04	30	24.0	130	26.5	34.5	12	35	16
GKS05	34	23.5	160	27.5	38.5	16	45	15
GKS06	40	28.0	200	33.0	44.5	20	50	18
GKS07	46	32.5	250	37.5	50.5	25	65	21



Torque plate at housing foot

In position 2, 4 or 6

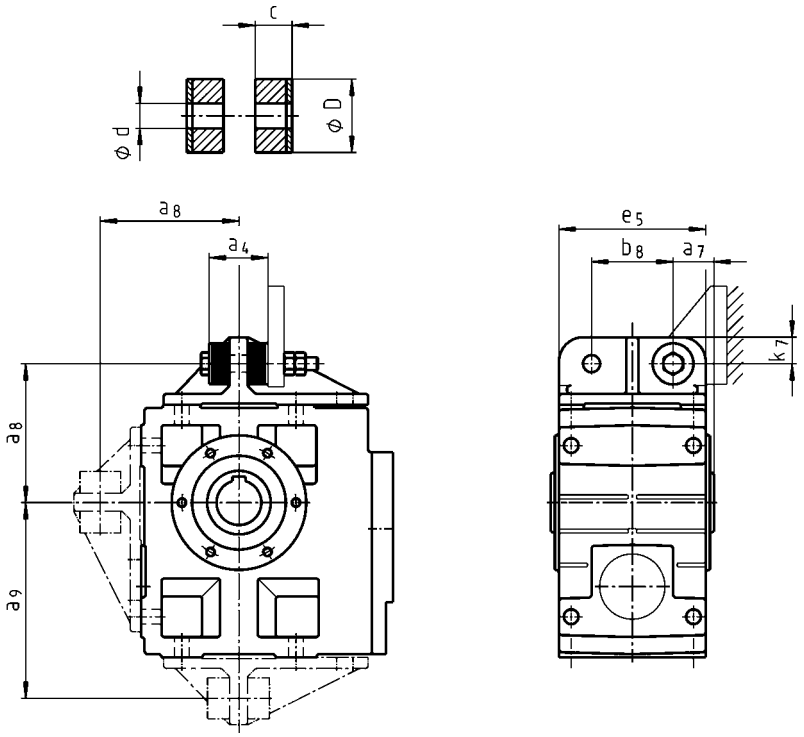

	a_4	a_7	a_8	a_9	b_8	c	d	D	e_5	k_7
GKS04	41	27.5	106	135.0	60	14.5	11	30	100	20
GKS05	45	35.0	115	160.0	70	15.0	13	40	127	25
GKS06	72	40.0	145	195.0	80	27.0	17	50	145	28
GKS07	78	50.0	170	240.0	100	28.0	21	60	180	35
GKS09	86	60.0	214	300.0	120	29.0	26	72	222	46
GKS11	94	72.5	260	375.0	145	30.0	31	92	270	55
GKS14	100	85.0	320	465.0	180		39	110	328	70



Ventilations

Position of ventilation, sealing elements and oil level check

GKS05...14-3

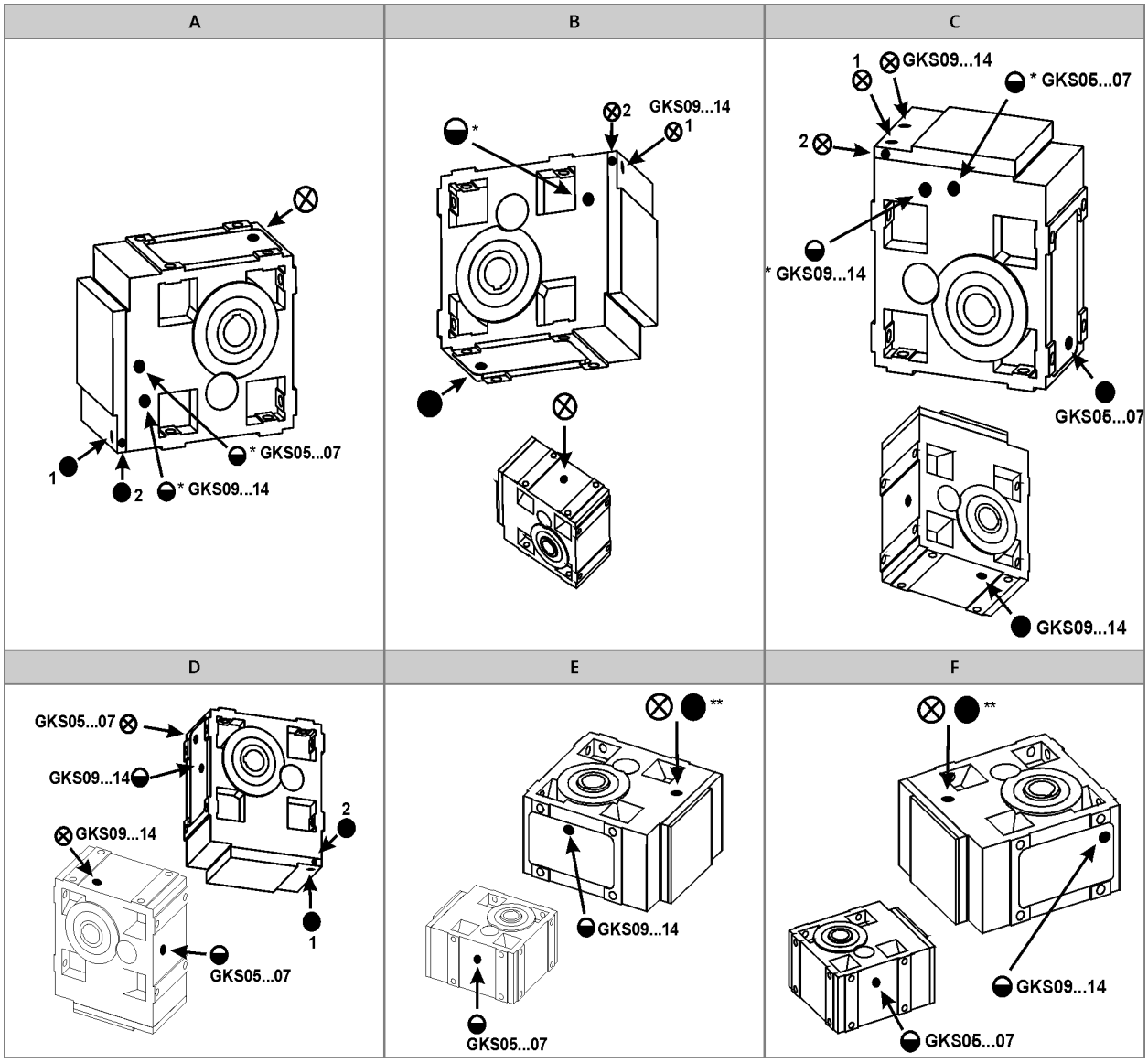

A to F Mounting position
⊗ Ventilation / Oil filler plug
● Oil drain plug
◒ Oil control plug
* On both sides
** On opposite side

Pos.1 standard
Pos.2 only for:
- GKS05-3M □□□ 090□□□
- GKS05-3M □□□ 100□□□
- GKS06-3M □□□ 112□□□
- GKS07-3M □□□ 160□□□

6.4

Ventilations

Position of ventilation, sealing elements and oil level check

GKS05...14-4

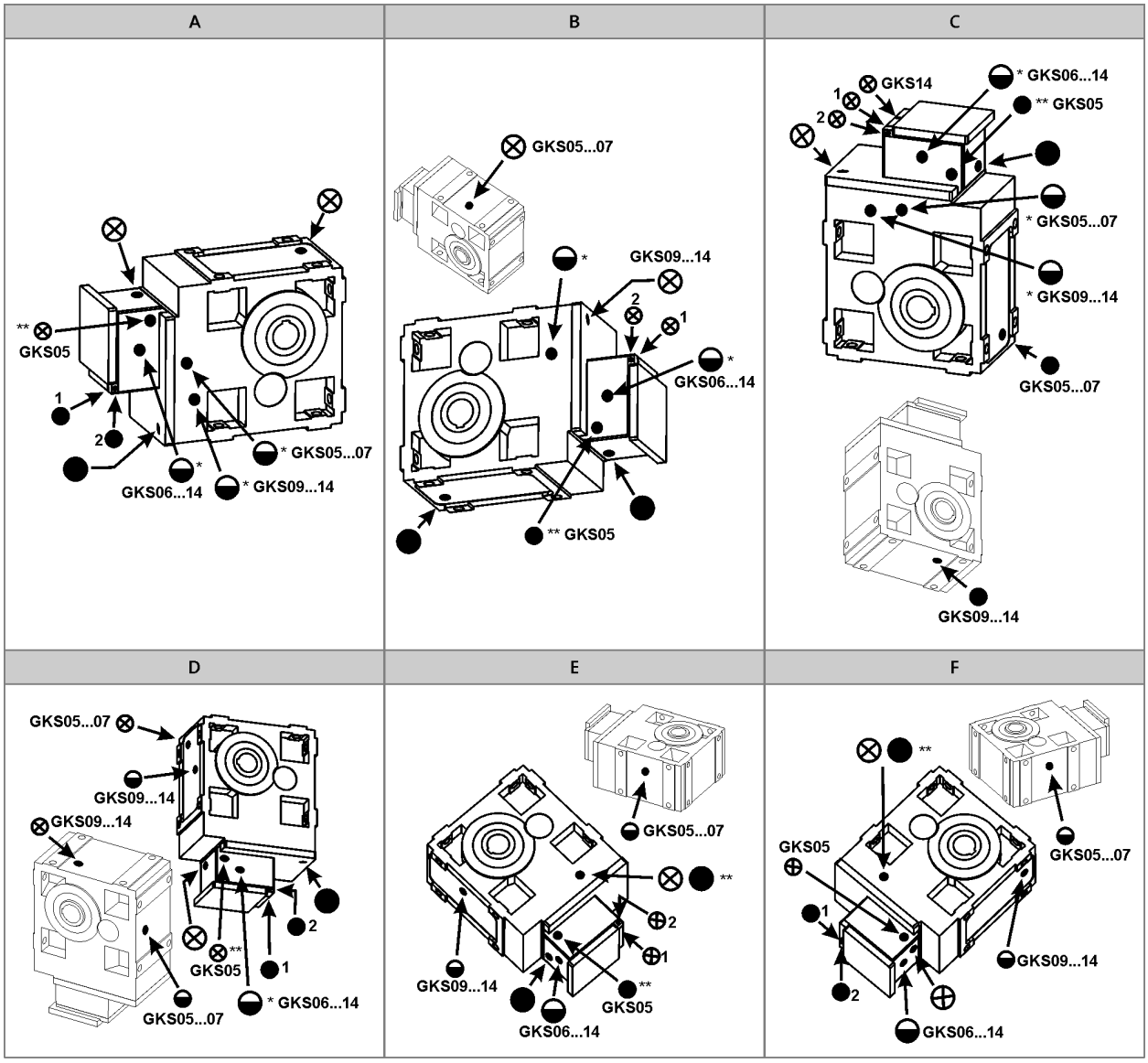

A to F Mounting position
⊗ Ventilation / Oil filler plug
● Oil drain plug
◒ Oil control plug
* On both sides
** On opposite side

Pos.1 standard
Pos.2 only for:
- GKS07-4M □□□ 090□□□
- GKS07-4M □□□ 100□□□
- GKS09-4M □□□ 112□□□



Ventilations

Compensation reservoir for mounting position C

GKS□□-3

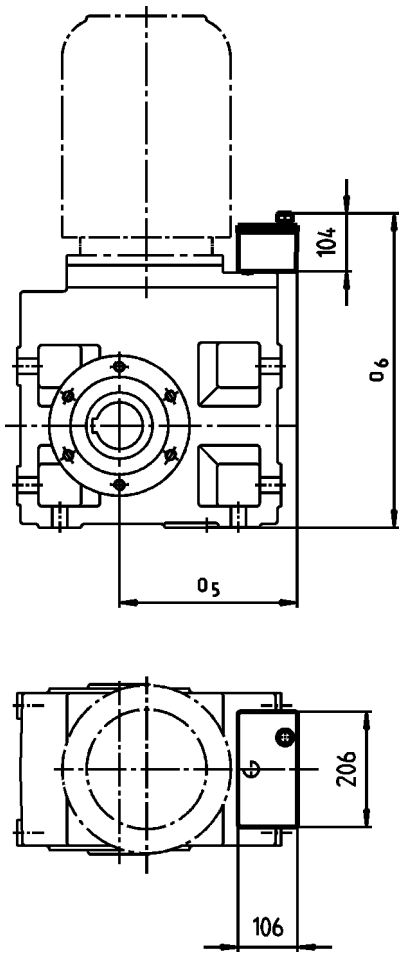

Motor	090 100	112	132	160 180 225

	o_5	o_6	o_5	o_6	o_5	o_6	o_5	o_6
	[mm]	[mm]	[mm]	[mm]	[mm]	[mm]	[mm]	[mm]
GKS09	243	533	265	533	282	533	297	533
GKS11	258	626	280	630	304	630	318	630
GKS14			313	739	343	739	343	739

► Terminal box position 4 not permitted.







IE3 three-phase AC motors m500

Inverter operation 5.5 ... 45 kW

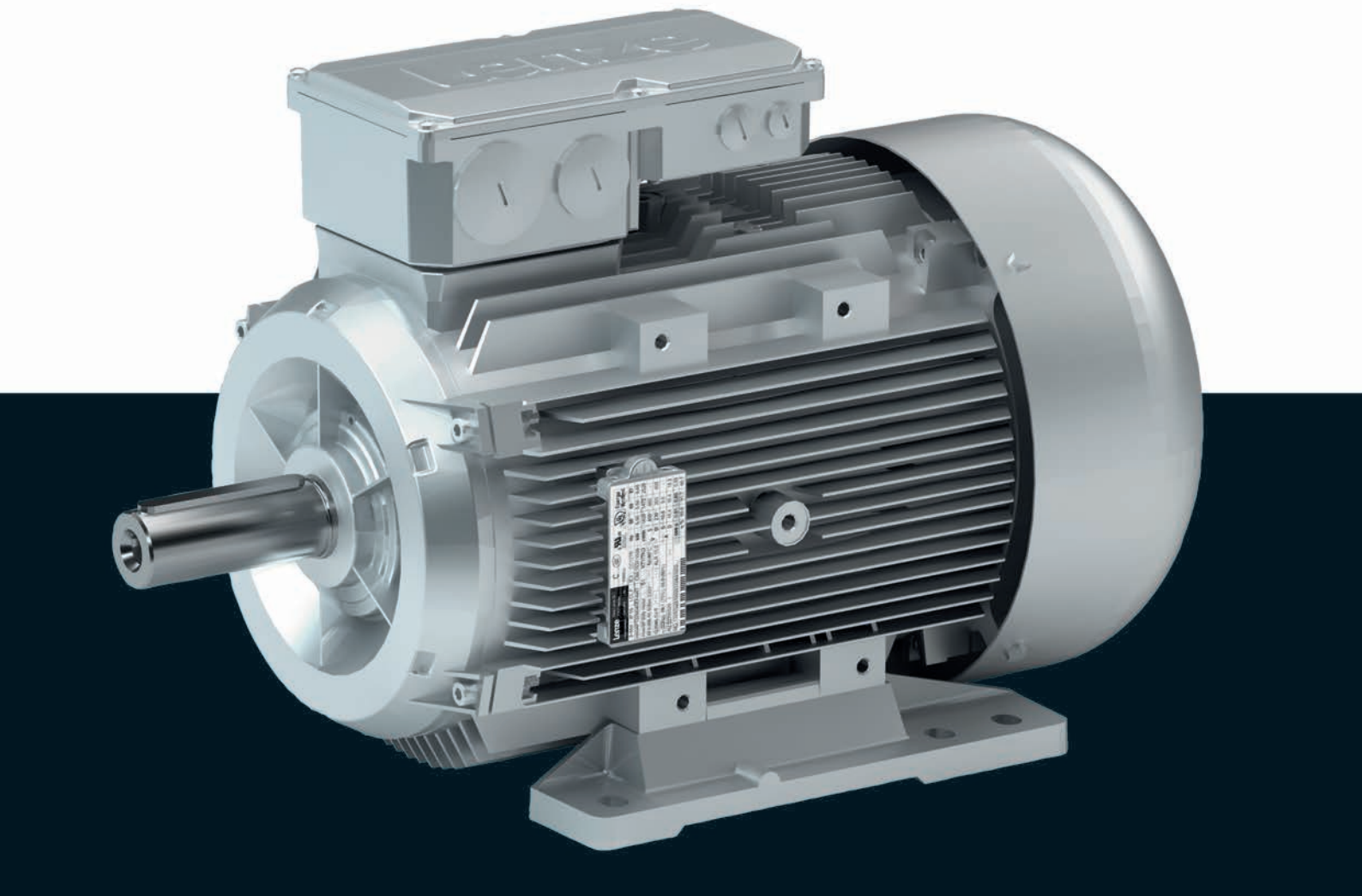

IE3 three-phase AC motors m500



Contents

General information	List of abbreviations	6.6 - 4
	Inverter-operated motors	6.6 - 5
	Product information	6.6 - 5
	Equipment	6.6 - 6
	The modular motor system	6.6 - 7
	Dimensioning	6.6 - 10
Technical data	Standards and operating conditions	6.6 - 11
	Permissible radial and axial forces	6.6 - 12
	Rated data for 50 Hz	6.6 - 14
	Rated data for 60 Hz	6.6 - 15
	Rated data for 87 Hz	6.6 - 16
	Dimensions, self-ventilated (4-pole)	6.6 - 17
	Dimensions, forced ventilated (4-pole)	6.6 - 22
	Additional length of the built-on accessories	6.6 - 27
Accessories	Surface and corrosion protection	6.6 - 29
	Motor connection	6.6 - 30
	Connection via terminal box	6.6 - 31
	Connections via ICN connectors	6.6 - 32
	Connection via M12 connector	6.6 - 36
	Connections via HAN connectors	6.6 - 37
	Spring-applied brake	6.6 - 40
	Temperature monitoring	6.6 - 52
	Blower	6.6 - 54
	Feedback	6.6 - 55



List of abbreviations

$\eta_{100\,\%}$	[%]	Efficiency
$\eta_{75\,\%}$	[%]	Efficiency
$\eta_{50\,\%}$	[%]	Efficiency
cos ϕ		Power factor
I_N	[A]	Rated current
I_{max}	[A]	Max. current consumption
J	[kgcm²]	Moment of inertia
m	[kg]	Mass
M_a	[Nm]	Starting torque
M_b	[Nm]	Stalling torque
M_{max}	[Nm]	Max. torque
M_N	[Nm]	Rated torque
n_N	[r/min]	Rated speed
P_N	[kW]	Rated power
P_{max}	[kW]	Max. power input

U_{max}	[V]	Max. mains voltage
U_{min}	[V]	Min. mains voltage
$U_{N,\Delta}$	[V]	Rated voltage
$U_{N,Y}$	[V]	Rated voltage

CE	Communauté Européenne
CSA	Canadian Standards Association
DIN	Deutsches Institut für Normung e.V.
EMC	Electromagnetic compatibility
EN	European standard
IEC	International Electrotechnical Commission
IM	International Mounting Code
IP	International Protection Code
NEMA	National Electrical Manufacturers Association
UL	Underwriters Laboratory Listed Product
UR	Underwriters Laboratory Recognized Product
VDE	Verband deutscher Elektrotechniker (Association of German Electrical Engineers)
CCC	China Compulsory Certificate
EAC	Customs union Russia / Belarus / Kazakhstan certificate
cURus	Combined certification marks of UL for the USA and Canada
UkrSEPRO	Certificate for Ukraine



Inverter-operated motors

In a power range of 0.12 to 45 KW, Lenze offers inverter-driven three-phase AC motors for comprehensive tasks.

They differ with regard to the efficiency class and can be used for the types required for open-loop or closed-loop controlled inverter operation.

Customer benefit

- Different efficiency classes for the greatest economic benefit
- Saving of space by compact direct mounting to Lenze gearboxes
- Market-oriented modular system enables the ubiquitous use for extensive machine tasks
- Connectors that are currently used on the market allow for a quick connection also if service tasks are to be carried out

Motor	Efficiency class	Power range	Supply voltage
MD three-phase AC motor	IE1 motor	0.12 ... 22 kW	230/400 and 460 V
MH three-phase AC motor	IE2 motor	0.75 ... 45 kW	230/400 and 460 V
MF three-phase AC motor		0.55 ... 22 KW	230/400 V
m500-P three-phase AC motor	IE3 motor	5.5 ... 45 kW	230/400 and 460 V

Product information

The product name

Operational performance	Product range		Design	Peak height	Motor length	Number of poles	Product
Inverter operation	m500	-	P	132	M	4	m500-P132M4
					L		m500-P132L4
				160	M		m500-P160M4
					L		m500-P160L4
				180	M		m500-P180M4
					L		m500-P180L4
					V		m500-P180V4
				200	M		m500-P200M4
				225			m500-P225M4
					L		m500-P225L4



Equipment

Overview

The equipment includes all the options available as standard and all the built-on accessories of the product.

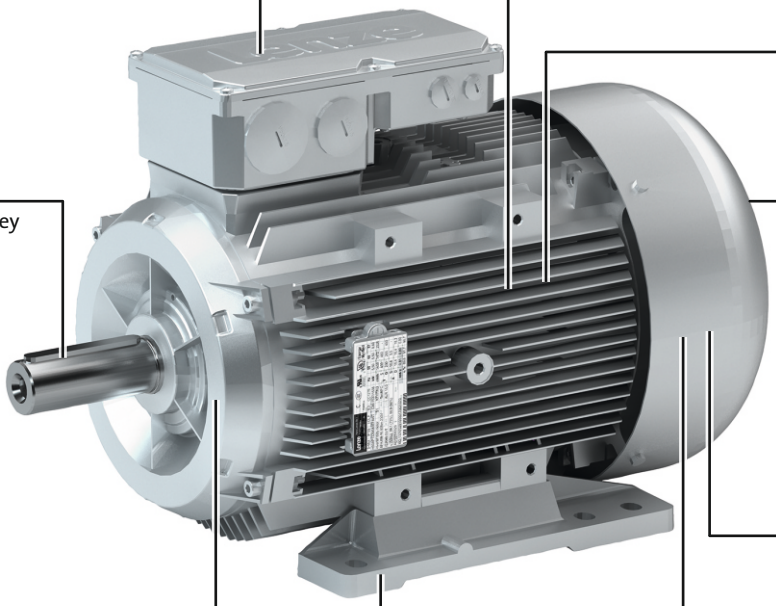

Motor connection
Terminal box
Connector ICN
Connector HAN

Output shaft
Solid shaft with feather key

Motor design
Flange (B5)with through holes

Motor design
Foot (B3)

Number of poles
4-pole, 5.5 ... 45 kW

Temperature monitoring
Thermal contact TKO
pTC thermistor
Thermal detector KTY

Cooling
Integral fan
Blower

Feedback
No
Resolver
Incremental encoder
Absolute value encoder

Spring-applied brake
No
Standard
Option manual release lever



The modular motor system

Motor details

Product	m500-P132M4	m500-P132L4	m500-P160M4	m500-P160L4	m500-P180M4	m500-P180L4
Technical data						
Rated power	5.5 kW	7,5 kW	11 kW	15 kW	18.5 kW	22 kW
Supply voltage	230/400 V; 460 V					
Operating mode	S1					
Motor design	B3 B5-FF265		B3 B5-FF300			
Motor shaft	38 x 80 mm		42 x 110 mm		48 x 110 mm	
Colour	Primed Paint in various corrosion-protection designs in accordance with RAL colours					
Surface and corrosion protection	Without OKS(uncoated) OKS-G (primed) OKS-S (Small); OKS-M (medium) OKS-L (large)					
Connection type	Terminal box ICN connector HAN-Modular connector		Terminal box HAN-Modular connector		Terminal box	
Spring-applied brake						
Rated torque [Nm]	60 80		80 150		150 260	
Brake voltage [V]	DC 24 AC 230 AC 400 AC 460					
Brake design	Standard					
	Standard Overexcited Cold Brake					
Options	Manual release lever Low noise					
Feedback	With absolute value encoder With incremental encoder With resolver					
Cooling	Integral fan Blower					
Temperature monitoring	TKO thermal contact PTC thermistor KTY83-110 thermal detector KTY84-130 thermal detector Thermal TCO contact + PTC thermistor Thermal contact TCO + thermal detector KTY83-110 Thermal TCO contact + thermal detector KTY84-130					
Approval	cURus [1)]					
Enclosure	IP55					

[1)] In preparation.



The modular motor system

Motor details

Product	m500-P180V4 [1]	m500-P200M4	m500-P225M4	m500-P225L4
Technical data				
Rated power	30 kW		37 kW	45 kW
Supply voltage	230/400 V; 460 V			
Operating mode	S1			
Motor design		B3 B5-FF350	B3 B5-FF400	
Motor shaft		55 x 110 mm	60 x 140 mm	
Colour	Primed Paint in various corrosion-protection designs in accordance with RAL colours			
Surface and corrosion protection	Without OKS(uncoated) OKS-G (primed) OKS-S (Small); OKS-M (medium) OKS-L (large)			
Connection type	Terminal box			
Spring-applied brake				
Rated torque [Nm]	150 260		400	
Brake voltage [V]	DC 24 AC 230 AC 400 AC 460			
Brake design	Standard			
	Standard Overexcited Cold Brake			
Options	Manual release lever Low noise			
Feedback	With absolute value encoder With incremental encoder With resolver			
Cooling	Integral fan Blower			
Temperature monitoring	TKO thermal contact PTC thermistor KTY83-110 thermal detector KTY84-130 thermal detector Thermal TCO contact + PTC thermistor Thermal contact TCO + thermal detector KTY83-110 Thermal TCO contact + thermal detector KTY84-130			
Approval	cURus [2]			
Enclosure	IP55			

[1] This motor is intended for direct mounting to a gearbox and is not available in motor design B3 or B5.
[2] In preparation.



The modular motor system

Motor details

Design



B3 (with foot)



B5 (with flange)

Connection type



Terminal box



ICN connector



HAN connector

Cooling: integral fan



Without built-on accessories



With spring-applied brake
With or without manual release lever



With feedback
With feedback and spring-applied brake

Cooling: blower



Without built-on accessories



With spring-applied brake
With or without manual release lever



With feedback
With feedback and spring-applied brake



Dimensioning

Torque derating at low motor frequencies

During operation with the rated torque at low speeds (< 20 Hz), the integral fan does not rotate fast enough anymore to ensure sufficient cooling of the motor. In order to prevent overheating, operation without a blower requires a torque reduction of the motor.
The blower cools the motor steadily and irrespective of the motor speed. A torque reduction is not required and the motor can be actuated with its rated torque from 5 Hz to the rated frequency.

The diagram shows the motor frame size-dependent torque reduction for self-ventilated motors, taking the thermal behaviour during actuation of the inverter into consideration.

Torque characteristics

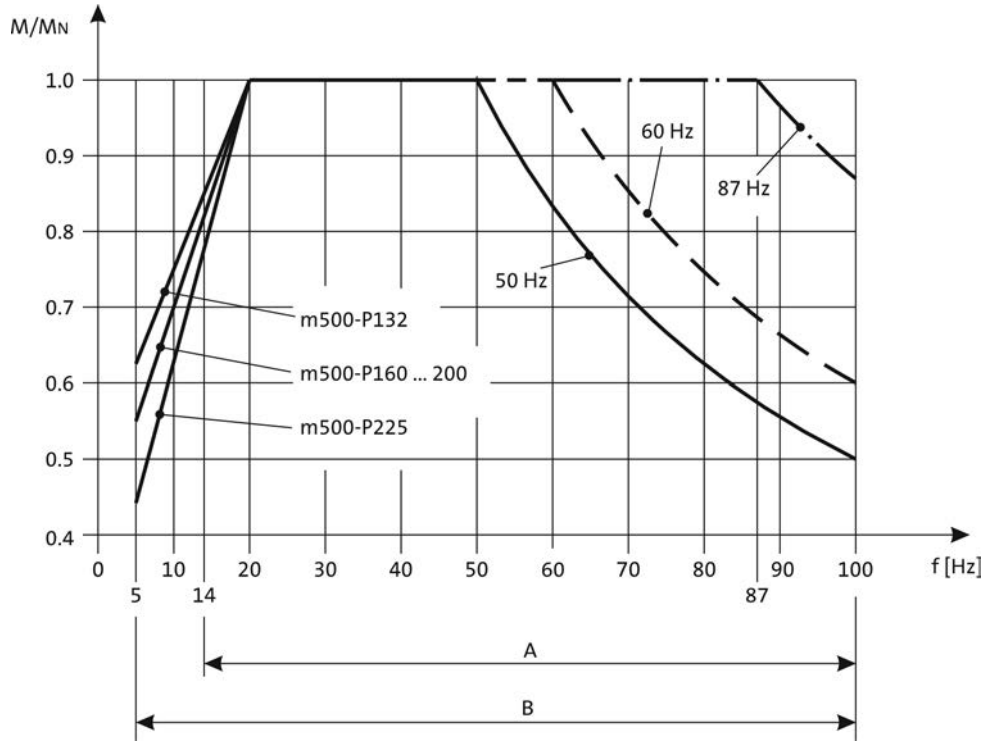

A = Operation with integral fan and brake
B = Operation with integral fan and brake control "Holding current reduction"

► The motor specifications stated in this catalogue for inverter operation apply to operation with a Lenze inverter. If you are uncertain, get in touch with the manufacturer of the inverter to ask whether the device is capable of driving the motor with the stated specifications (e.g. setting range, base frequency).

6.6

You can use the Drive Solution Designer for precise drive dimensioning.

The Drive Solution Designer helps you to carry out a fast and high-quality drive dimensioning.
The software includes well-founded and proven knowledge on drive applications and electro-mechanical drive components.

Please contact your Lenze sales office.



Standards and operating conditions

Overview

Enclosure			
EN 60529			IP55
Energy efficiency class			
IEC 60034-30			IE3
IEC 60034-2-1			Methodology for measuring efficiency
Conformity			
CE			Low-Voltage Directive
			2006/95/EC
Temperature class			
IEC/EN 60034-1; utilisation			B
IEC/EN 60034-1; insulation system (enamel-insulated wire)			F
Vibrational severity			
IEC/EN 60034-14			A
Climatic conditions			
Transport (EN 60721-3-2)			2K3 (temperature: -20 °C ... +70 °C)
Storage (EN 60721-3-1)			1K3 (temperature: -20 °C ... +60 °C)
Storage (EN 60721-3-1) > 3 months			1K3 (Temperature: -20 °C ... +40 °C)
Operation (EN 60721-3-3)			3K3 (temperature: -20°C ... +40°C)
Operation (EN 60721-3-3) with brake			3K3 (temperature: -10 °C ... +40 °C)
Operation (EN 60721-3-3) with blower			3K3 (Temperature: -15 °C ... +40 °C)
Max. ambient operating temperature			
With power reduction	$T_{opr,max}$	[°C]	60
Site altitude			
Amsl	H_{max}	[m]	4000

[1)] Types with deviating degrees of protection:
IP55 with brake (IP54 with manual release lever).

► In the European Union, the ErP Directive stipulates minimum efficiency levels for three-phase AC motors. Geared three-phase AC motors that do not conform with this Directive do not meet CE requirements and must not be marketed in the European Economic Area. For further information about the ErP Directive and the Lenze products to which it relates, please refer to the brochure entitled "International efficiency directives for three-phase AC motors".



Permissible radial and axial forces

Application of forces

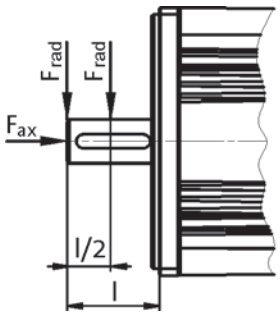

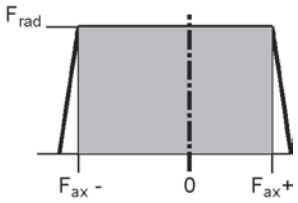

Application of force at l/2

► Forces at medium speed 2000 r/min.

Bearing service life L_{10}												
	10000 h			20000 h			30000 h			50000 h		
	F_{rad} [N]	$F_{ax,-}$ [N]	$F_{ax,+}$ [N]	F_{rad} [N]	$F_{ax,-}$ [N]	$F_{ax,+}$ [N]	F_{rad} [N]	$F_{ax,-}$ [N]	$F_{ax,+}$ [N]	F_{rad} [N]	$F_{ax,-}$ [N]	$F_{ax,+}$ [N]
m500-P132M4	2323	-653	1253	1863	-422	1022	1639	-313	913	1357	-201	801
m500-P132L4	2323	-653	1253	1863	-422	1022	1639	-313	913	1357	-201	801
m500-P160M4	4074	-1407	2067	3264	-984	1644	2871	-787	1447	2444	-583	1243
m500-P160L4	4074	-1407	2067	3264	-984	1644	2871	-787	1447	2444	-583	1243
m500-P180M4	4943	-1580	2480	3969	-1088	1988	3496	-854	1754	2983	-594	1494
m500-P180L4	4943	-1580	2480	3969	-1088	1988	3496	-854	1754	2983	-594	1494
m500-P200M4	6666	-2202	3122	5359	-1555	2475	4724	-1251	2171	4036	-942	1862
m500-P225M4	7386	-2527	3477	5956	-1800	2750	5260	-1460	2410	4508	-1111	2061
m500-P225L4	7386	-2527	3477	5956	-1800	2750	5260	-1460	2410	4508	-1111	2061

► The values for the bearing service life L_{10} refer to an average speed of 2000 r/min. Depending on the ambient temperatures, the service life of the bearings is also reduced by the grease lifetime.
► Data for axial forces relate to the maximum radial force with the corresponding bearing service life.



Permissible radial and axial forces

Application of force at l

► Forces at medium speed 2000 r/min.

Bearing service life L_{10}												
	10000 h			20000 h			30000 h			50000 h		
	F_{rad}	$F_{ax,-}$	$F_{ax,+}$	F_{rad}	$F_{ax,-}$	$F_{ax,+}$	F_{rad}	$F_{ax,-}$	$F_{ax,+}$	F_{rad}	$F_{ax,-}$	$F_{ax,+}$
	[N]	[N]	[N]	[N]	[N]	[N]	[N]	[N]	[N]	[N]	[N]	[N]
m500-P132M4	2091	-653	1253	1677	-422	1022	1475	-313	913	1257	-201	801
m500-P132L4	2091	-653	1253	1677	-422	1022	1475	-313	913	1257	-201	801
m500-P160M4	3610	-1407	2067	2892	-984	1644	2543	-787	1447	2166	-583	1243
m500-P160L4	3610	-1407	2067	2892	-984	1644	2543	-787	1447	2166	-583	1243
m500-P180M4	4462	-1580	2480	3583	-1088	1988	3156	-854	1754	2693	-594	1494
m500-P180L4	4462	-1580	2480	3583	-1088	1988	3156	-854	1754	2693	-594	1494
m500-P200M4	6069	-2202	3122	4880	-1555	2475	4301	-1251	2171	3675	-942	1862
m500-P225M4	6588	-2527	3477	5313	-1800	2750	4692	-1460	2410	4021	-1111	2061
m500-P225L4	6588	-2527	3477	5313	-1800	2750	4692	-1460	2410	4021	-1111	2061

► The values for the bearing service life L_{10} refer to an average speed of 2000 r/min. Depending on the ambient temperatures, the service life of the bearings is also reduced by the grease life-time.
► Data for axial forces relate to the maximum radial force with the corresponding bearing service life.



Rated data for 50 Hz

4-pole motors

	P_N	n_N	$U_{N,\Delta}$	$I_{N,\Delta}$	$U_{N,Y}$	$I_{N,Y}$	I_a/I_N
			± 5 %		± 5 %		
	[kW]	[r/min]	[V]	[A]	[V]	[A]	
m500-P132M4	5.50	1459	230	18.4	400	10.6	8.70
m500-P132L4	7.50	1458	230	25.3	400	14.6	9.10
m500-P160M4	11.0	1473	230	38.1	400	22.0	8.10
m500-P160L4	15.0	1475	230	51.6	400	29.8	8.20
m500-P180M4	18.5	1474	230	59.4	400	34.3	7.70
m500-P180L4	22.0	1478	230	69.5	400	40.1	7.70
m500-P180V4 [1)]	30.0	1480	230	94.1	400	54.3	8.10
m500-P200M4	30.0	1480	230	94.1	400	54.3	8.10
m500-P225M4	37.0	1487	230	124	400	71.3	7.50
m500-P225L4	45.0	1485	230	144	400	83.0	7.70

	M_N	M_a	M_b	cos ϕ	$\eta_{50\,\%}$	$\eta_{75\,\%}$	$\eta_{100\,\%}$	J [2)]	m [2)]
	[Nm]	[Nm]	[Nm]		[%]	[%]	[%]	[kgcm²]	[kg]
m500-P132M4	36.2	116	156	0.81	86.9	89.1	89.6	300	57.0
m500-P132L4	49.4	158	222	0.82	88.0	89.9	90.4	340	69.0
m500-P160M4	71.9	209	273	0.80	90.1	91.6	91.4	770	108
m500-P160L4	98.0	284	372	0.81	91.1	92.1	92.1	810	119
m500-P180M4	122	292	413	0.84	91.3	92.9	92.6	1730	157
m500-P180L4	142	413	512	0.86	92.2	93.2	93.0	1730	157
m500-P180V4 [1)]	194	600	736	0.85	92.7	93.5	93.6	2150	185
m500-P200M4	194	600	736	0.85	92.7	93.5	93.6	2150	185
m500-P225M4	240	719	839	0.81	90.9	92.8	93.9	4350	280
m500-P225L4	290	870	1015	0.83	91.7	93.2	94.2	4350	280

[1)] This motor is intended for direct mounting to a gearbox and is not available in motor design B3 or B5.
[2)] Without accessories



Rated data for 60 Hz

4-pole motors

	P_N	n_N	$U_{N,Y}$	$I_{N,Y}$	I_a/I_N
			± 5 %		
	[kW]	[r/min]	[V]	[A]	
m500-P132M4	5.50	1742	460	9.50	8.60
m500-P132L4	7.50	1742	460	13.6	8.70
m500-P160M4	11.0	1763	460	21.1	8.00
m500-P160L4	15.0	1765	460	28.3	8.00
m500-P180M4	18.5	1771	460	33.2	7.60
m500-P180L4	22.0	1773	460	39.3	7.60
m500-P180V4 [1)]	30.0	1761	460	53.1	8.00
m500-P200M4	30.0	1761	460	53.1	8.00
m500-P225M4	37.0	1773	460	70.1	7.40
m500-P225L4	45.0	1775	460	82.0	7.50

	M_N	M_a	M_b	cos ϕ	$\eta_{50\,\%}$	$\eta_{75\,\%}$	$\eta_{100\,\%}$	J [2)]	m [2)]
	[Nm]	[Nm]	[Nm]		[%]	[%]	[%]	[kgcm²]	[kg]
m500-P132M4	30.3	90.9	124	0.80	89.2	91.1	91.7	300	57.0
m500-P132L4	41.3	124	178	0.81	88.9	91.1	91.7	340	69.0
m500-P160M4	60.1	168	222	0.80	91.0	92.6	92.4	770	108
m500-P160L4	81.9	229	303	0.80	91.9	93.0	93.0	810	119
m500-P180M4	102	235	327	0.83	92.2	93.9	93.6	1730	157
m500-P180L4	119	332	415	0.85	92.7	93.8	93.6	1730	157
m500-P180V4 [1)]	161	484	597	0.84	93.1	93.9	94.1	2150	185
m500-P200M4	161	484	597	0.84	93.1	93.9	94.1	2150	185
m500-P225M4	198	574	673	0.80	91.4	93.3	94.5	4350	280
m500-P225L4	242	700	821	0.82	92.4	93.9	95.0	4350	280

[1)] This motor is intended for direct mounting to a gearbox and is not available in motor design B3 or B5.
[2)] Without accessories



Rated data for 87 Hz

4-pole motors

	P_N	n_N	M_N	M_{max}	$U_{N,\Delta}$	$I_{N,\Delta}$	cos ϕ	$\eta_{50\,\%}$	$\eta_{75\,\%}$	$\eta_{100\,\%}$	J [2]	m [2]
					± 5 %							
	[kW]	[r/min]	[Nm]	[Nm]	[V]	[A]		[%]	[%]	[%]	[kgcm²]	[kg]
m500-P132M4	9.60	2526	36.2	148	400	18.3	0.80	88.0	90.0	90.7	300	57.0
m500-P132L4	13.1	2524	49.4	206	400	25.5	0.81	88.4	90.4	91.1	340	69.0
m500-P160M4	19.2	2550	71.9	266	400	38.3	0.79	90.5	92.0	91.8	770	108
m500-P160L4	26.2	2550	98.0	354	400	51.9	0.80	91.5	92.5	92.5	810	119
m500-P180M4	32.5	2552	122	392	400	59.5	0.83	91.8	93.3	93.1	1730	157
m500-P180L4	38.1	2558	142	487	400	69.6	0.85	92.3	93.5	93.3	1730	157
m500-P180V4 [1]	52.0	2563	194	681	400	94.4	0.84	92.9	93.7	93.8	2150	185
m500-P200M4	52.0	2563	194	681	400	94.4	0.84	92.9	93.7	93.8	2150	185
m500-P225M4	64.6	2574	240	819	400	124	0.80	91.1	93.0	94.2	4350	280
m500-P225L4	78.1	2571	290	964	400	145	0.82	92.0	93.4	94.4	4350	280

[1] This motor is intended for direct mounting to a gearbox and is not available in motor design B3 or B5.
[2] Without accessories



Dimensions, self-ventilated (4-pole)

m500-P132

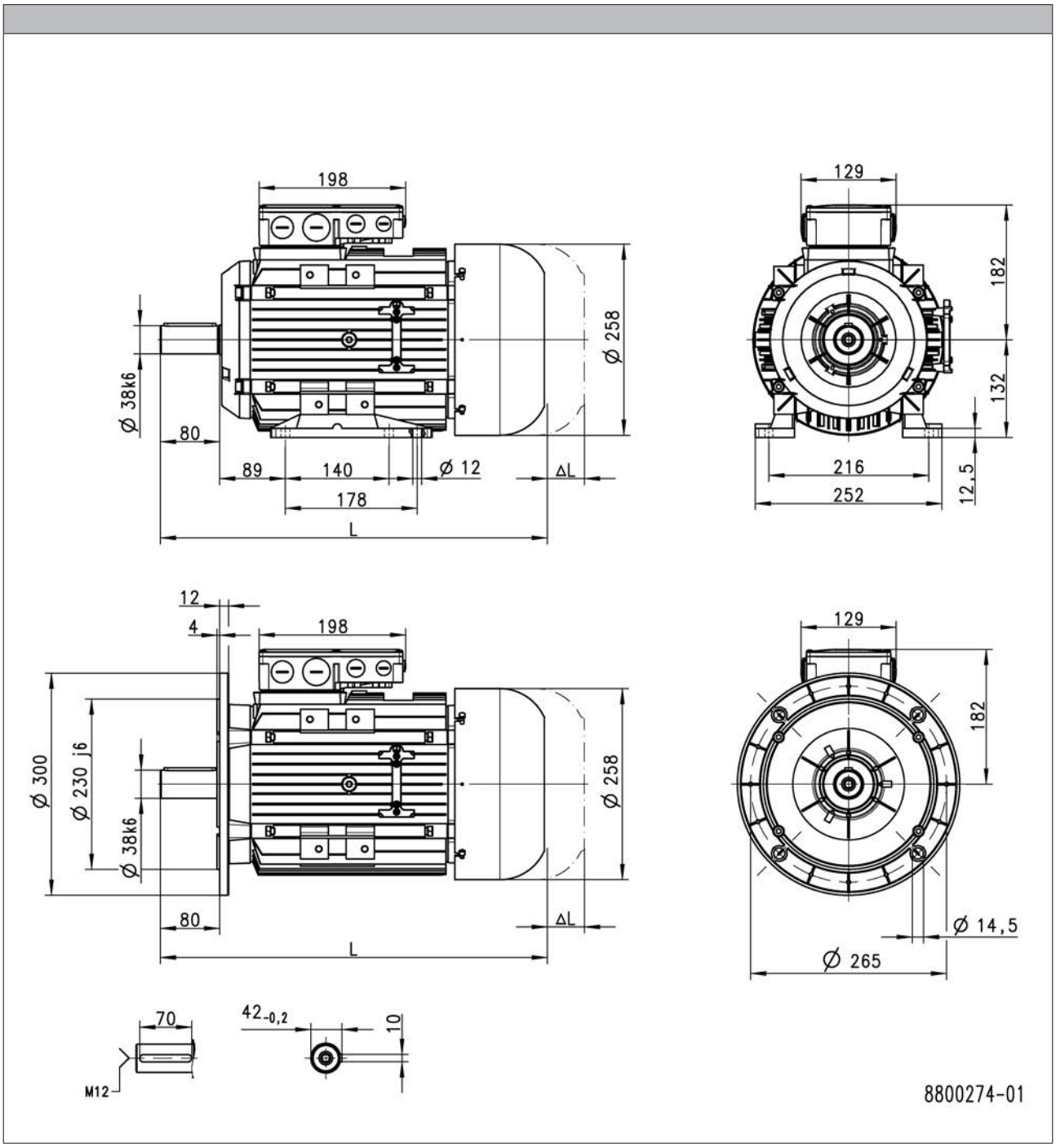

Product			m500-P132M4	m500-P132L4
Dimensions				
Motor length	L	[mm]	523	
Length of motor options	Δ L	[mm]	125	

L = length of the motor without built-on accessories
ΔL = additional length of the built-on accessories (longest type)

27 - Additional length of the built-on accessories

6.6



Dimensions, self-ventilated (4-pole)

m500-P160

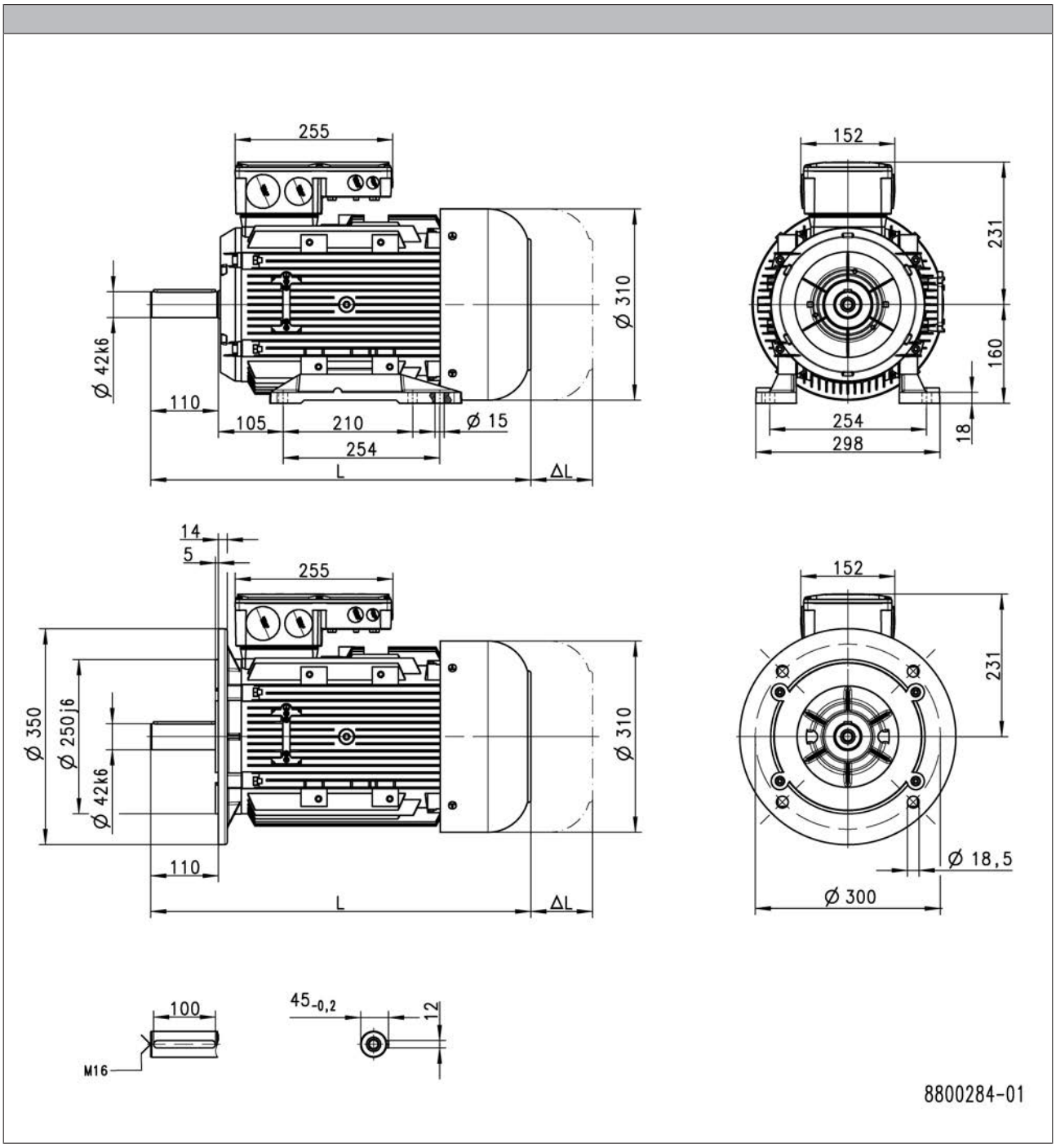

Product			m500-P160M4	m500-P160L4
Dimensions				
Motor length	L	[mm]	616	
Length of motor options	Δ L	[mm]	291	

L = length of the motor without built-on accessories
ΔL = additional length of the built-on accessories (longest type)

27 - Additional length of the built-on accessories



Dimensions, self-ventilated (4-pole)

m500-P180

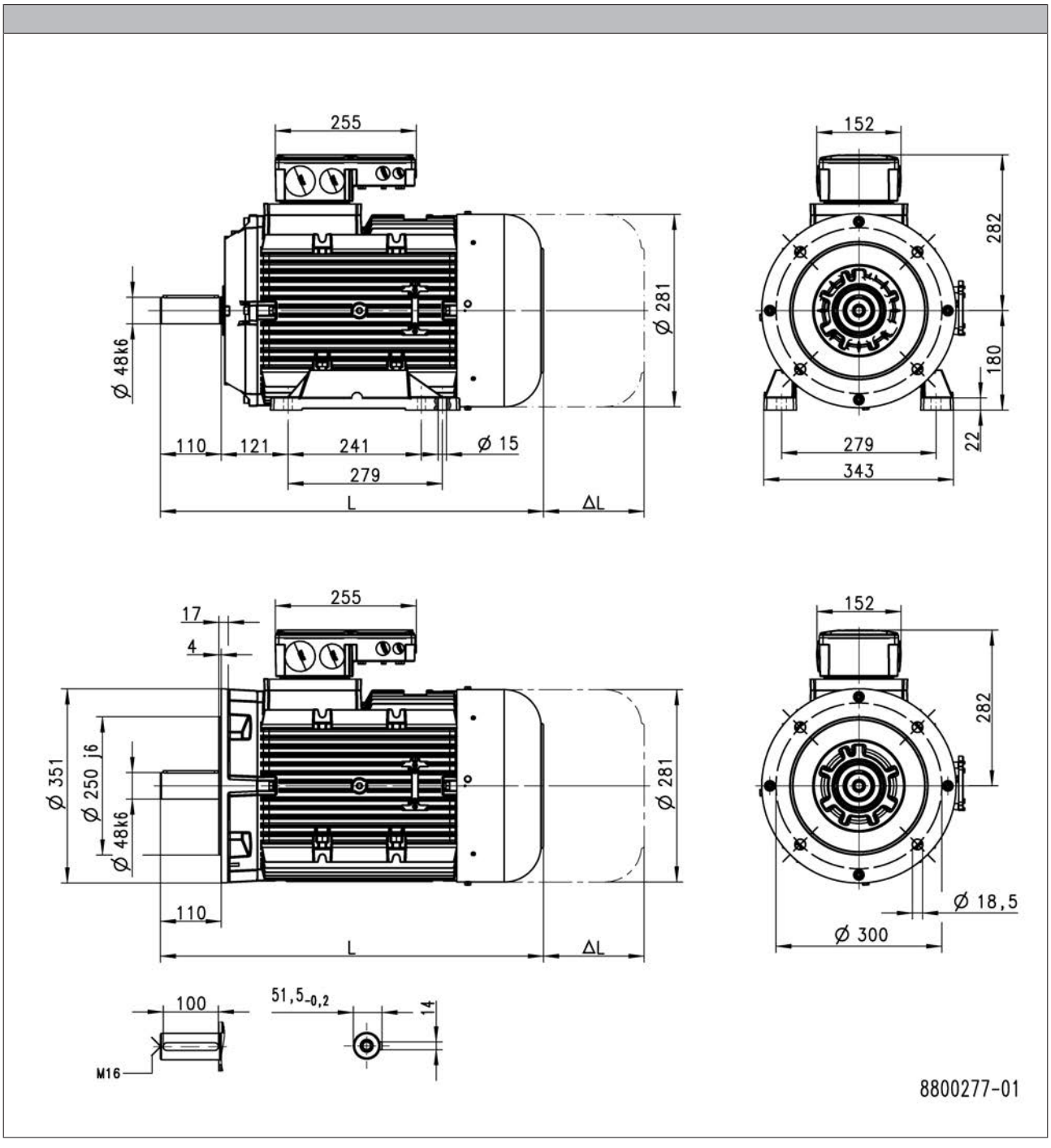

Product			m500-P180M4	m500-P180L4
Dimensions				
Motor length	L	[mm]	693	
Length of motor options	Δ L	[mm]	192	

L = length of the motor without built-on accessories
ΔL = additional length of the built-on accessories (longest type)

27 - Additional length of the built-on accessories



Dimensions, self-ventilated (4-pole)

m500-P200

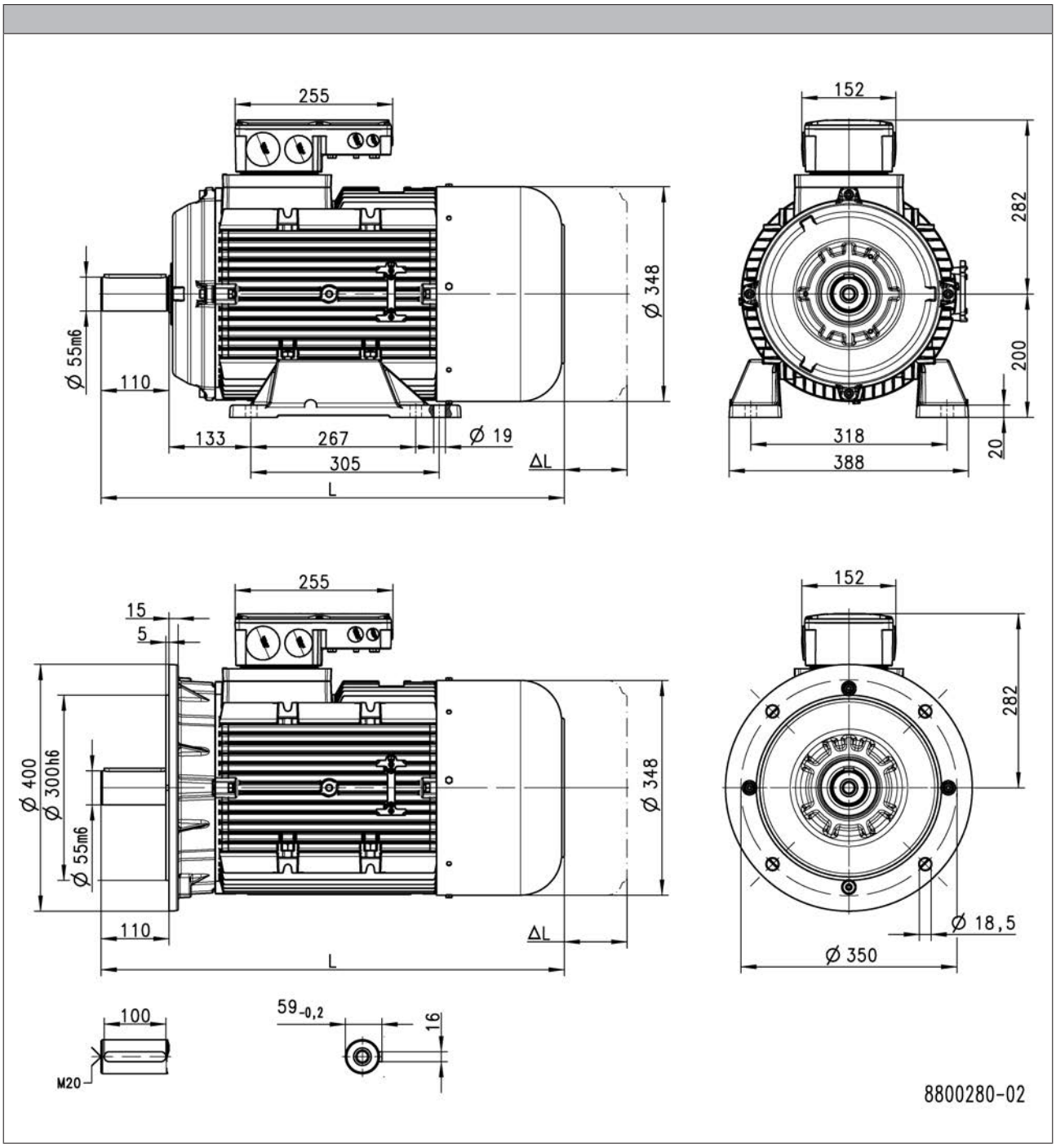

Product			m500-P200M4
Dimensions			
Motor length	L	[mm]	751
Length of motor options	Δ L	[mm]	192

L = length of the motor without built-on accessories
ΔL = additional length of the built-on accessories (longest type)

27 - Additional length of the built-on accessories

6.6



Dimensions, self-ventilated (4-pole)

m500-P225

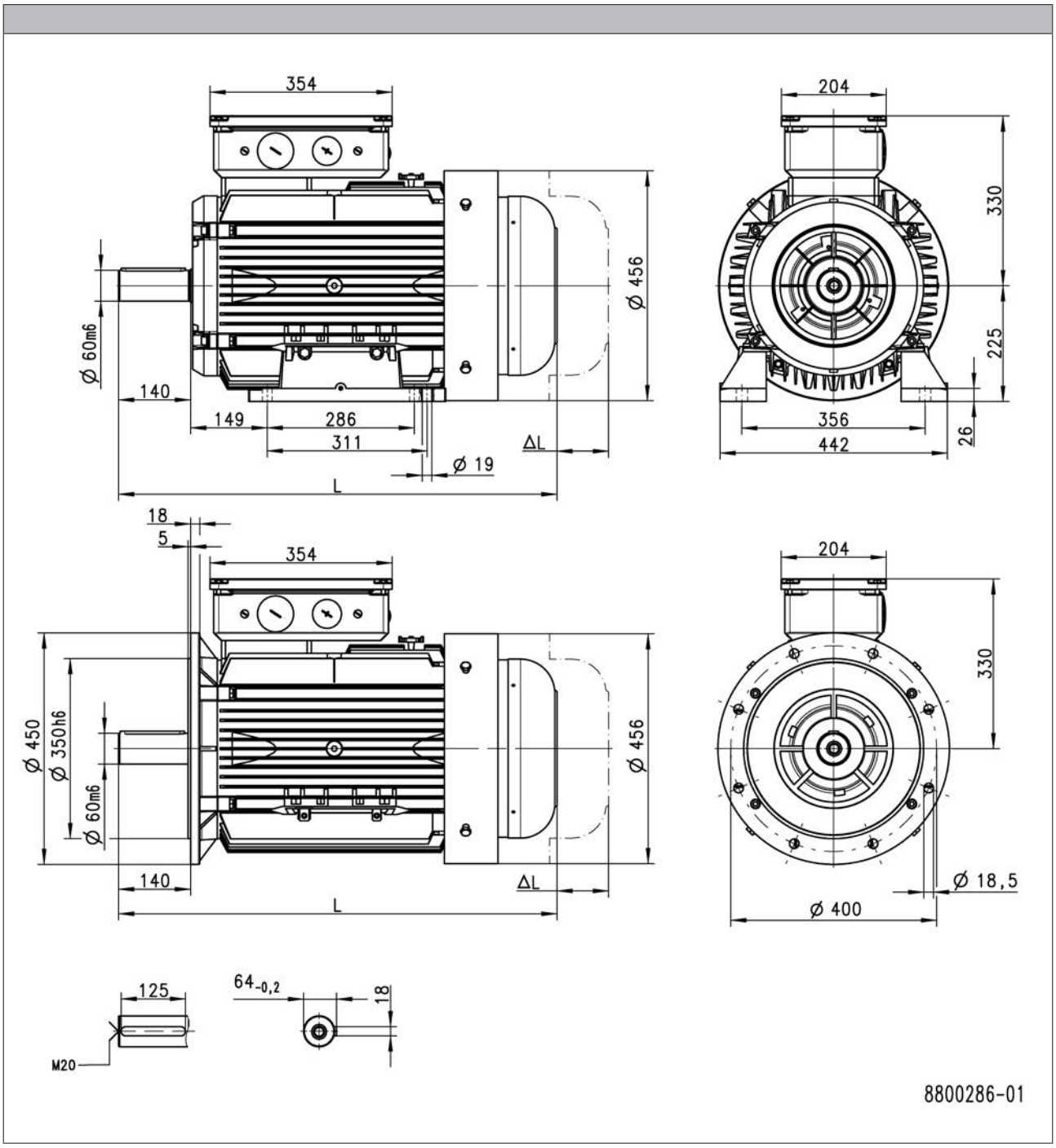

Product			m500-P225M4	m500-P225L4
Dimensions				
Motor length	L	[mm]	853	
Length of motor options	Δ L	[mm]	193	

L = length of the motor without built-on accessories
ΔL = additional length of the built-on accessories (longest type)

27 - Additional length of the built-on accessories



Dimensions, forced ventilated (4-pole)

m500-P132

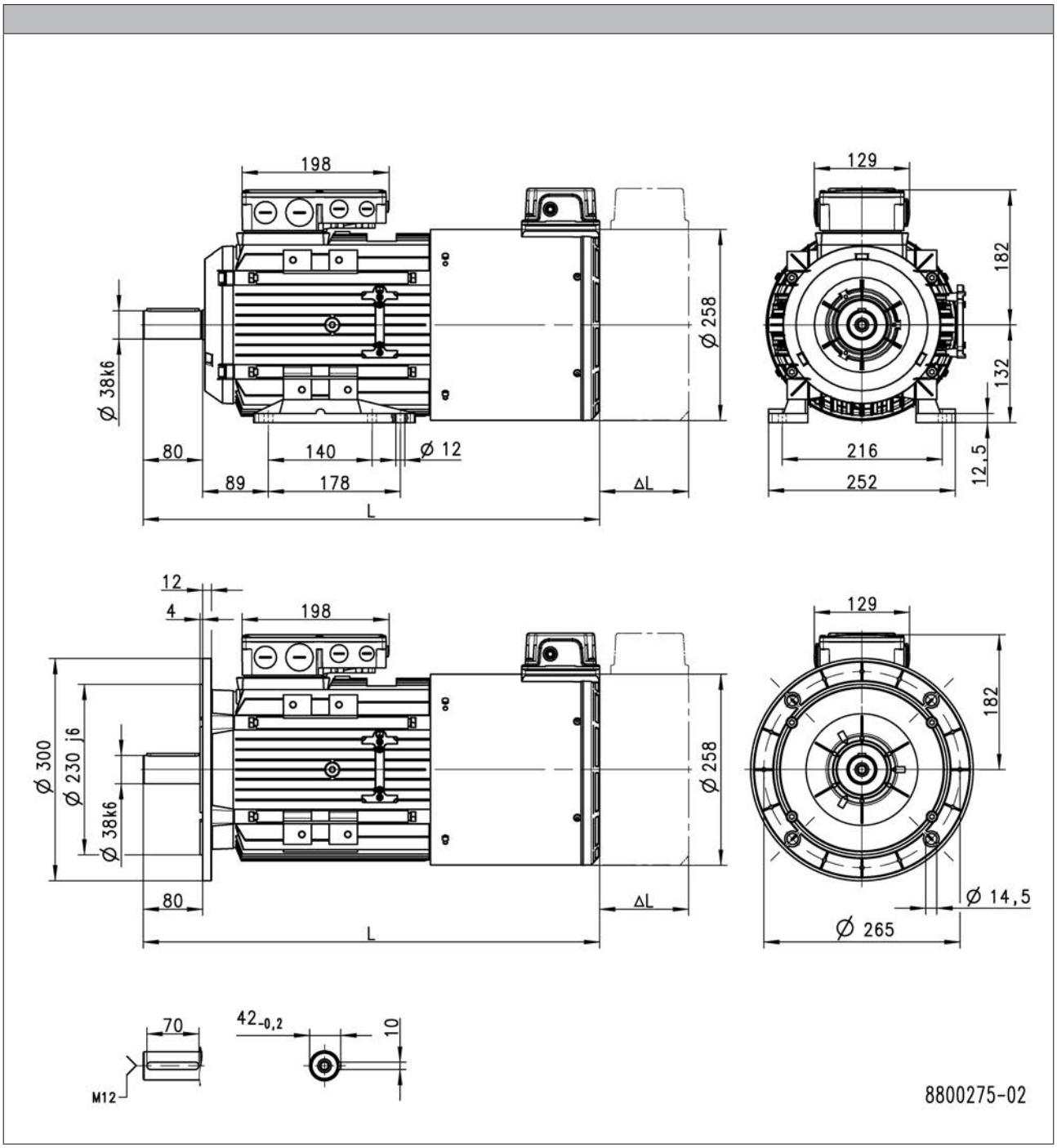

Product			m500-P132M4	m500-P132L4
Dimensions				
Motor length	L	[mm]	615	
Length of motor options	Δ L	[mm]	84.0	

L = length of the motor without built-on accessories
ΔL = additional length of the built-on accessories (longest type)

27 - Additional length of the built-on accessories



Dimensions, forced ventilated (4-pole)

m500-P160

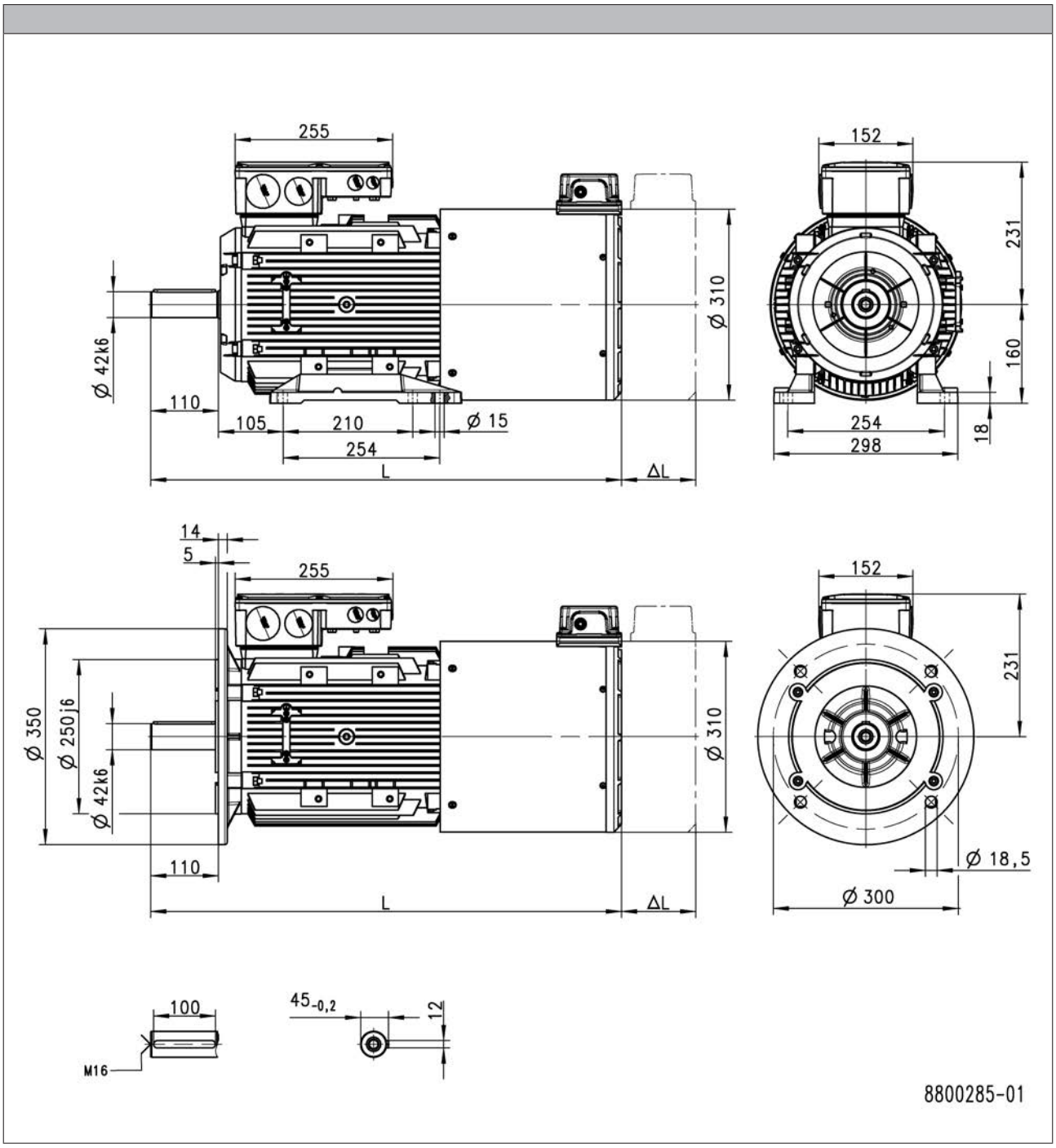

Product			m500-P160M4	m500-P160L4
Dimensions				
Motor length	L	[mm]	763	
Length of motor options	Δ L	[mm]	88.0	

L = length of the motor without built-on accessories
ΔL = additional length of the built-on accessories (longest type)

27 - Additional length of the built-on accessories



Dimensions, forced ventilated (4-pole)

m500-P180

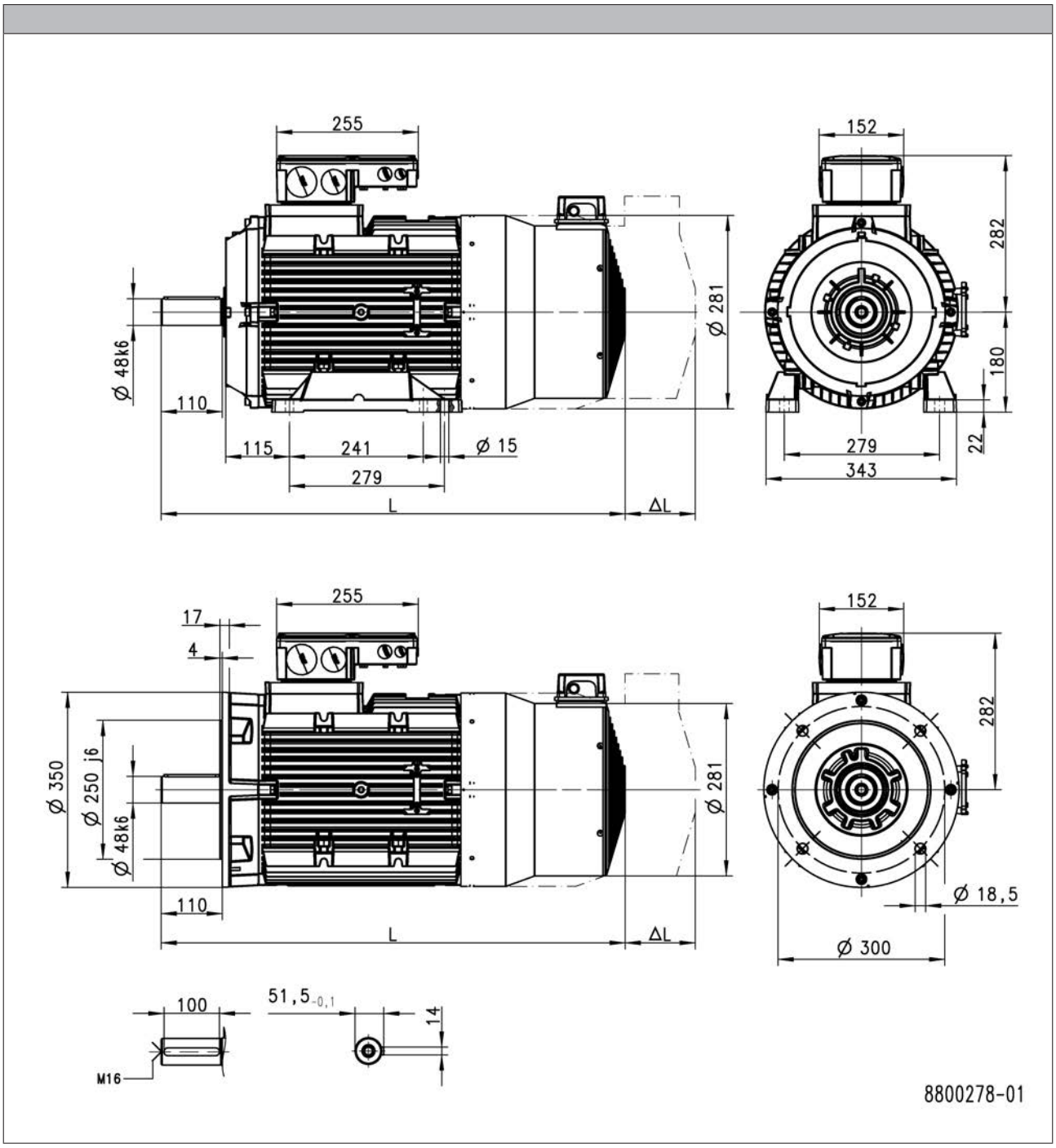

Product			m500-P180M4	m500-P180L4
Dimensions				
Motor length	L	[mm]	836	
Length of motor options	Δ L	[mm]	105	

L = length of the motor without built-on accessories
ΔL = additional length of the built-on accessories (longest type)

27 - Additional length of the built-on accessories

6.6



Dimensions, forced ventilated (4-pole)

m500-P200

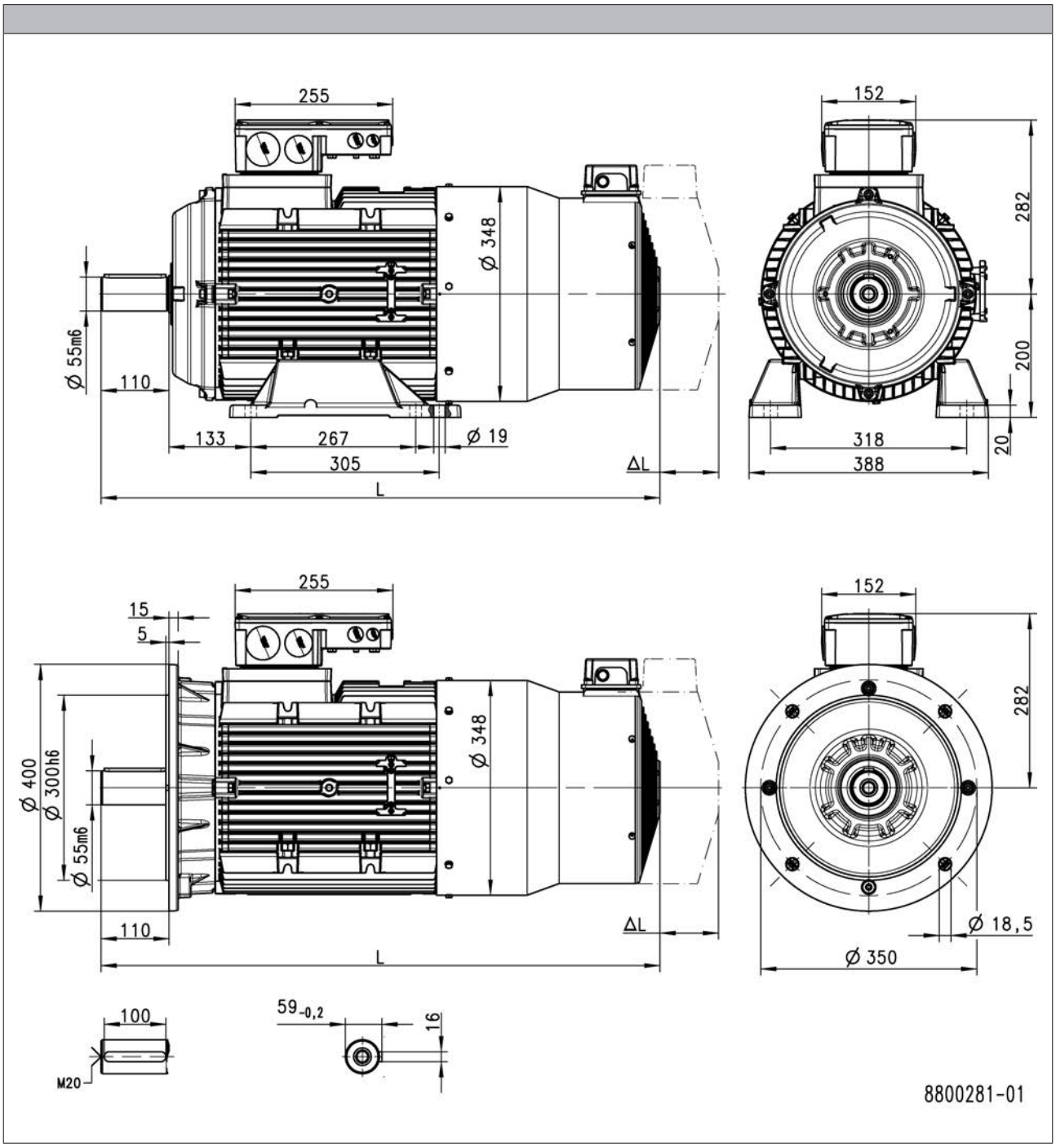

Product			m500-P200M4
Dimensions			
Motor length	L	[mm]	906
Length of motor options	Δ L	[mm]	105

L = length of the motor without built-on accessories
ΔL = additional length of the built-on accessories (longest type)

27 - Additional length of the built-on accessories

6.6



Dimensions, forced ventilated (4-pole)

m500-P225

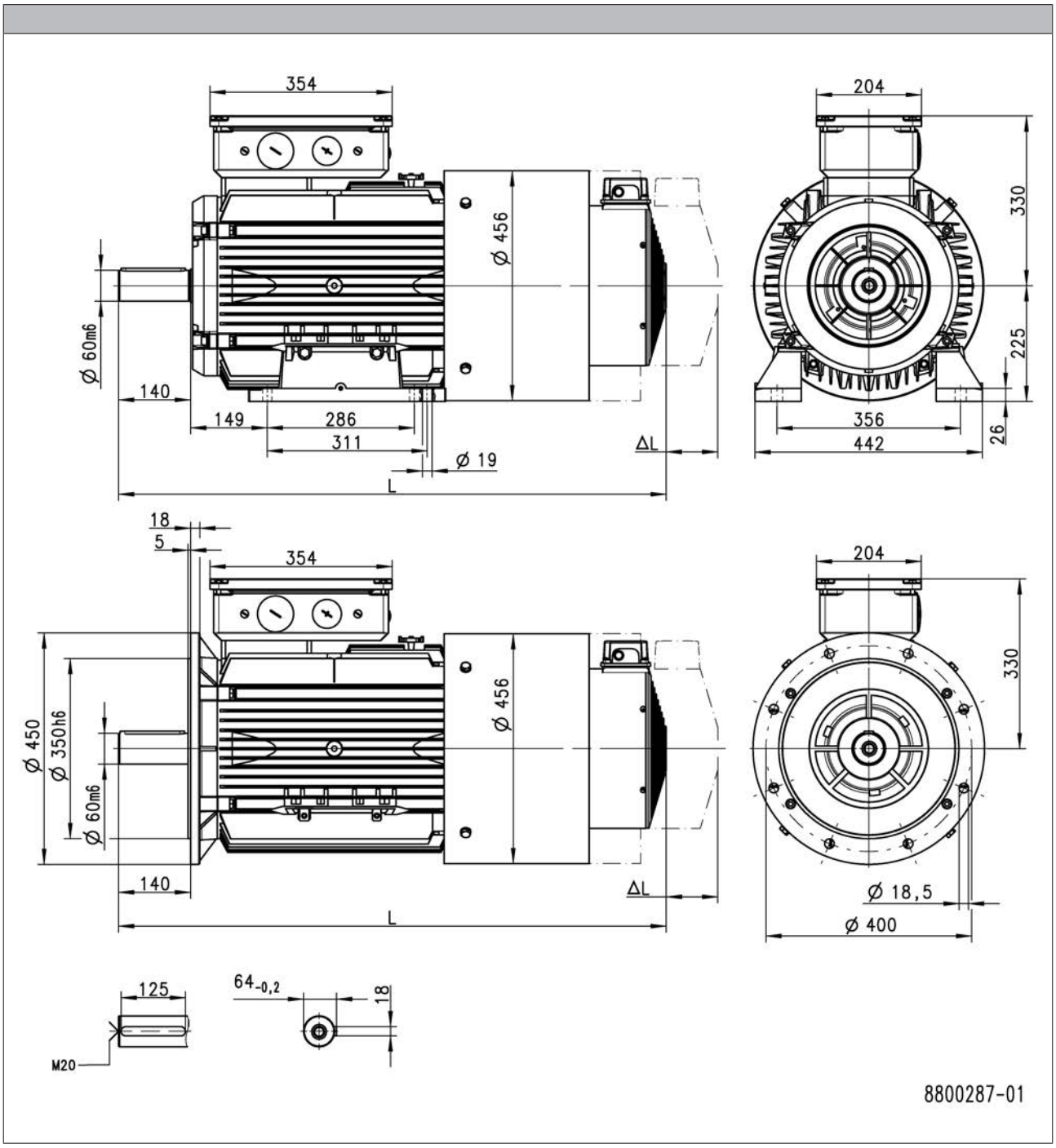

Product			m500-P225M4	m500-P225L4
Dimensions				
Motor length	L	[mm]	1065	
Length of motor options	Δ L	[mm]	0.000	

L = length of the motor without built-on accessories
ΔL = additional length of the built-on accessories (longest type)

27 - Additional length of the built-on accessories

6.6



Additional length of the built-on accessories

► The additional lengths specified also apply to geared motors.

Dimensions, self-ventilated (4-pole)

Product			m500-P132M4 m500-P132L4	m500-P160M4 m500-P160L4	m500-P180M4 m500-P180L4 m500-P180V4	m500-P200M4	m500-P225M4 m500-P225L4
			With brake				
Length of motor options	Δ L	[mm]	71.0	105	103	113	
			With feedback				
Length of motor options	Δ L	[mm]	94.0	105	79.0	78.0	79.0
			With brake + feedback				
Length of motor options	Δ L	[mm]	125	291	192		193

Dimensions, forced ventilated (4-pole)

Product			m500-P132M4 m500-P132L4	m500-P160M4 m500-P160L4	m500-P180M4 m500-P180L4 m500-P180V4	m500-P200M4	m500-P225M4 m500-P225L4
			With brake				
Length of motor options	Δ L	[mm]	84.0	30.0	62.0	60.0	0.000
			With feedback				
Length of motor options	Δ L	[mm]	84.0	30.0	62.0	105	0.000
			With brake + feedback				
Length of motor options	Δ L	[mm]	84.0	88.0	105		0.000





Surface and corrosion protection

For optimum protection of three-phase AC motors against ambient conditions, the surface and corrosion protection system (OKS) offers tailor-made solutions.

Various surface coatings ensure that the motors operate reliably even at high air humidity, in outdoor installation or in the presence of atmospheric impurities. Any colour from the RAL Classic collection can be chosen for the top coat. The three-phase AC motors are also available unpainted (no surface and corrosion protection).

Surface and corrosion protection system	Applications	Measures
OKS-G (primed)	• Dependent on subsequent top coat applied	• 2K PUR priming coat (grey)
OKS-S (small)	• Standard applications • Internal installation in heated buildings • Air humidity up to 90%	• Surface coating as per corrosivity category C1 (in line with EN 12944-2)
OKS-M (medium)	• Internal installation in non-heated buildings • Covered, protected external installation • Air humidity up to 95%	• Surface coating as per corrosivity category C2 (in line with EN 12944-2)
OKS-L (high)	• External installation • Air humidity above 95% • Chemical industry plants • Food industry	• Surface coating as per corrosivity category C3 (in line with EN 12944-2) • Blower cover and B end shield additionally primed • Screws zinc-coated • Cable glands with gaskets • Corrosion-resistant brake with cover ring, stainless friction plate, and chrome-plated armature plate (on request) Optional measures: • Motor recesses sealed off (on request)

Structure of surface coating

Surface and corrosion protection system	Corrosivity category	Surface coating	Colour
	DIN EN ISO 12944-2	Structure	
Without OKS (uncoated)			
OKS-G (primed)		2K PUR priming coat	
OKS-S (small)	Comparable to C1	2K-PUR top coat	Standard: RAL 7012 Optional: RAL Classic
OKS-M (medium)	Comparable to C2	2K PUR priming coat 2K-PUR top coat	
OKS-L (high)	Comparable to C3		



Motor connection

The IE3 three-phase AC motors m500 are intended for inverter operation; mains operation, however, is also possible.
For 50 Hz operation, the motors are to be actuated in Δ connection with 230 V or in star/delta connection with 400 V.
For 60 Hz operation, the motors are to be actuated in star/delta connection with 460 V.
For inverter operation at 87 Hz, a rated voltage of 400 V in Δ connection has been defined.

The standard connection is implemented via a terminal box. Furthermore ICN and HAN connectors are provided to quickly carry out commissioning or maintenance operations.

Overview of the connection options

Product	m500-P132M4 m500-P132L4	m500-P160M4 m500-P160L4	m500-P180M4 m500-P180L4 m500-P180V4	m500-P200M4	m500-P225M4 m500-P225L4
Power connection/brake connection					
Terminal box	●	●	●	●	●
ICN connector	●				
HAN modular connector	●	●			
Feedback connection					
Terminal box	●	●	●	●	●
ICN connector	●	●	●	●	●
Blower connection					
Terminal box	●	●	●	●	●
ICN connector	●	●	●	●	●
Thermal sensor connection					
Terminal box	●	●	●	●	●
ICN connector	●	●			
HAN modular connector	●	●			



Connection via terminal box

The connection in the terminal box is implemented by means of conventional cable glands.

Cable entries

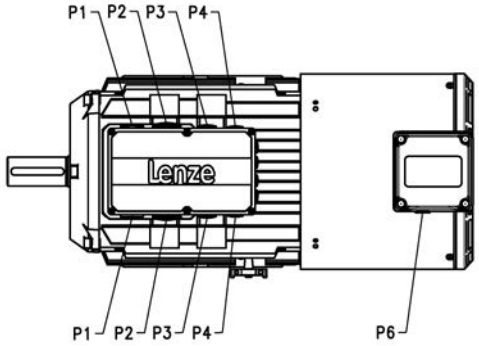

Product	Dimensions				
	P_1	P_2	P_3	P_4	P_6
	[mm]	[mm]	[mm]	[mm]	[mm]
m500-P132M4	M25x1.5	M32x1.5	M20x1.5	M16x1.5	M16x1.5
m500-P132L4					
m500-P160M4	M50x1.5	M40x1.5			
m500-P160L4					
m500-P180M4					
m500-P180L4					
m500-P180V4					
m500-P200M4					
m500-P225M4	M12x1.5	M63x1.5		M12x1.5	
m500-P225L4					



Connections via ICN connectors

A connector is used for the power connection, connection of the brake, and the temperature monitoring connection.
The feedback and blower connections are implemented via a separate connector in each case.

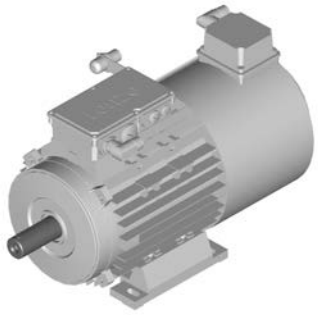

Connection for power, brake and temperature monitoring

For the power connection of the connector, a max. rated motor current of 16 A is permissible.
The connectors can be rotated by 270° and are equipped with a bayonet catch for SpeedTec connectors. As the connector fixing is also compatible with conventional box nuts, existing mating connectors can still be used without difficulty. The motor connection is determined in the terminal box.



► ICN 6-pole

No connection of temperature monitoring possible!

Pin assignment			
Contact	Designation	Meaning	
1	BD1 / BA1	Brake +/AC	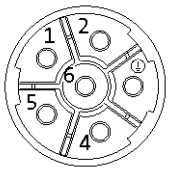
2	BD2 / BA2	Brake -/AC	
PE	PE	PE conductor	
4	U	Phase U power	
5	V	Phase V power	
6	W	Phase W power	

► ICN 8-pole

Pin assignment			
Contact	Designation	Meaning	
1	U	Phase U power	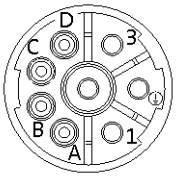
PE	PE	PE conductor	
3	V	Phase V power	
4	W	Phase W power	
A	TB1 / TP1 / R1	Thermal sensor: TKO/PTC/ +KTY	
B	TB2 / TP2 / R2	Thermal sensor: TKO/PTC/-KTY	
C	BD1 / BA1	Brake +/AC	
D	BD2 / BA2	Brake -/AC	



Connections via ICN connectors

Connection for power, brake and temperature monitoring

For IEC standard motors, the position of the connector can be selected.

For geared motors, the position of the connector must be selected as a function of the terminal box position.

Position of the connector for IEC standard motors

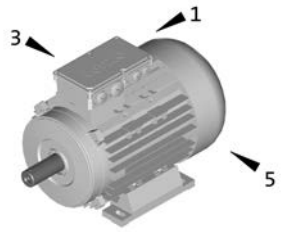

Possible connection position	3/5*

Position of the connector for geared motors

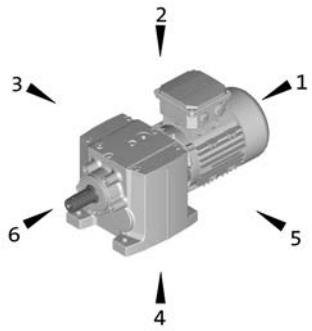

Terminal box position	2	3	4	5
Possible connection position	3/5*	2*/4	3*/5	2/4*

► If preferred positions are not specified in the order, the connector will be positioned as indicated by * on the diagram below.



Connections via ICN connectors

Blower connection

The blower is also optionally available with an ICN connector fixed to the terminal box of the blower for exceptionally fast commissioning. The connectors are fitted with a bayonet fixing, which is also compatible with conventional union nuts. Existing counter plugs can therefore continue to be used without difficulty.

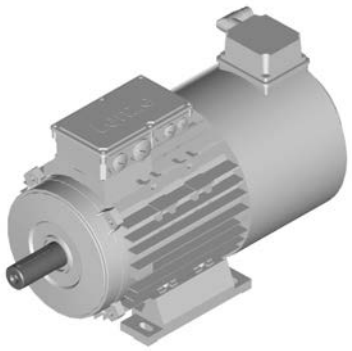

For the blower, the terminal box cover including the connector can be rotated by 90 ° step by step, if required.

► Blower 1-ph

Pin assignment			
Contact	Designation	Meaning	
PE	PE	PE conductor	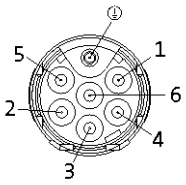
1	U1	Fan	
2	U2		
3		Not assigned	
4			
5			
6			

► Blower 3-ph

Pin assignment			
Contact	Designation	Meaning	
PE	PE	PE conductor	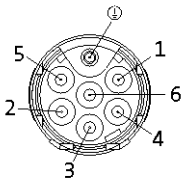
1	U	Phase U power	
2		Not assigned	
3	V	Phase V power	
4		Not assigned	
5			
6	W	Phase W power	



Connections via ICN connectors

Feedback connection

All encoder systems (apart from IG128-24V-H) are also available with an ICN connector fixed to the motor terminal box for exceptionally fast commissioning. The connectors are fitted with a bayonet fixing, which is also compatible with conventional union nuts. Existing mating connectors can therefore continue to be used without difficulty.
The feedback connector is located on the terminal box side opposite to the power connection



► Resolver

Pin assignment			
Contact	Designation	Meaning	
1	+Ref	Transformer windings	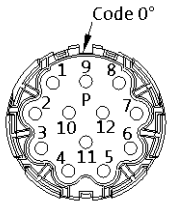
2	-Ref		
3	+VCC ETS	Supply: Electronic nameplate	
4	+COS	Cosine stator windings	
5	-COS		
6	+SIN	Sine stator windings	
7	-SIN		
8		Not assigned	
9			
10			
11	+KTY	KTY temperature sensor	
12	-KTY		

► Hiperface incremental encoder and SinCos absolute value encoder

Pin assignment			
Contact	Designation	Meaning	
1	B	Track B/+SIN	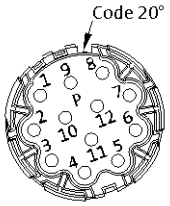
2	A^-	Track A inverse/-COS	
3	A	Track A/+COS	
4	$+U_B$	Supply +	
5	GND	Mass	
6	Z^-	Zero track inverse/-RS485	
7	Z	Zero track/+RS485	
8		Not assigned	
9	B^-	Track B inverse/-SIN	
10		Not assigned	
11	+KTY	KTY temperature sensor	
12	-KTY		



Connection via M12 connector

IG128-24V-H incremental encoder connection

As a standard this incremental encoder is equipped with a connection cable of about 0.5 m length and with a common industry standard M12 connector at its end.

Pin assignment			
Contact	Designation	Meaning	
1	$+U_B$	Supply +	
2	B	Track B	
3	GND	Mass	
4	A	Track A	



Connections via HAN connectors

HAN modular

The connector is available with two different power modules (16 A or 40 A), depending on the rated motor current. The motor connection is determined in the terminal box and must be checked before commissioning.

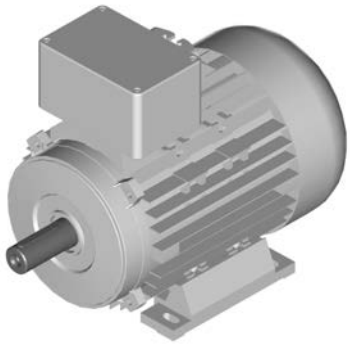

► HAN modular 16 A

Pin assignment			
Module	Contact	Meaning	
A	1	Terminal board: U1	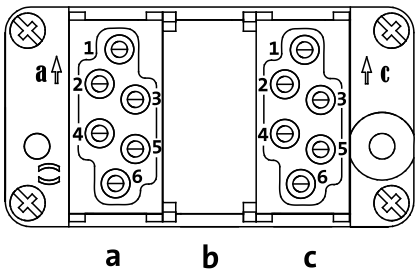
	2	Terminal board: V1	
	3	Terminal board: W1	
B		Dummy module	
C	1	Thermal sensor: +KTY/PTC/TKO	
	2	Brake +/AC	
	3	Brake -/AC	
	4	Rectifier: Switching contact	
	5		
	6	Thermal sensor: KTY/PTC/TKO	

► HAN modular 40 A

Pin assignment			
Module	Contact	Meaning	
A	1	Terminal board: U1	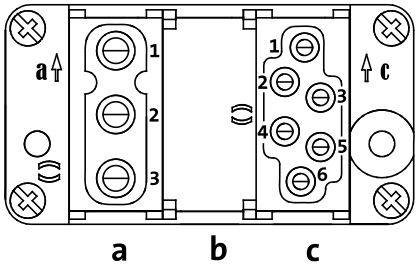
	2	Terminal board: V1	
	3	Terminal board: W1	
B		Dummy module	
C	1	Thermal sensor: +KTY/PTC/TKO	
	2	Brake +/AC	
	3	Brake -/AC	
	4	Rectifier: Switching contact	
	5		
	6	Thermal sensor: KTY/PTC/TKO	



Connections via HAN connectors

For IEC standard motors, the position of the cable entry can be selected.

Position of the cable entry for IEC standard motors

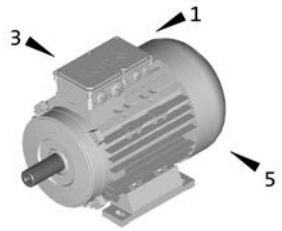

Possible cable entry position	1*/3/5

For geared motors, the position of the cable entry must be selected as a function of the terminal box position.

Position of the cable entry for geared motors

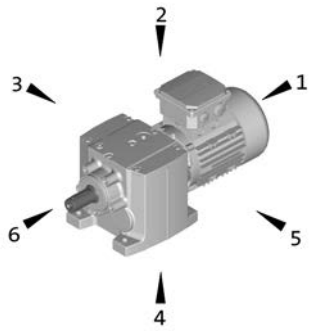

Terminal box position	2	3	4	5
Possible cable entry position	1*/3/5	1*/2/4	1*/3/5	1*/2/4

► If preferred positions are not specified in the order, the cable entry will be positioned as indicated by * on the diagram below.





Spring-applied brake

The three-phase AC motors can be equipped with a spring-applied brake which is active when the supply voltage has been switched off (closed-circuit principle). In the deenergised state, the brake is applied. This prevents possible movement of the motor shaft with regard to the load after switch-off or in the event of a power failure.
For optimum adaptation of the brake motor to the application, several brake sizes and control variants are provided for each motor.

Types
- **Standard**
  - 1 x 10^6 repeating switching cycles
  - 1 x 10^6 reversing switching cycles

Control
- DC supply
- AC supply via rectifiers in the terminal box

Enclosure
- Without manual release IP55
- With manual release IP54

Friction lining
- Asbestos-free, low-wear

Options
- Manual release
- Low noise

Braking torques

In addition to the standard braking torque, depending on the brake size, the possibility of choosing between a reduced and an increased braking torque is provided.
- When the braking torque is reduced, great wear reserves can be attained. This is enabled by a reduction of the spring rate.
- In order to obtain a greater braking torque, the spring rate is increased. This is practical, for instance, for hoists, since here the gravity acts as an additional acceleration in the negative direction.

Manual release

By actuating the manual release lever, the brake can be released manually during operation at zero current. Manual release facilitates positioning and maintenance work.



Spring-applied brake

Direct connection without rectifier

If the brake is activated directly without a rectifier, a freewheeling diode or a spark suppressor is required for protection against induction peaks.

- Supply voltages
  DC 24 V

Connection via mains voltage with brake rectifier

If the brake is not directly supplied with DC voltage, a rectifier is required. This is included in the scope of supply and is located in the terminal box of the motor. The rectifier converts the AC voltage of the connection into DC voltage. The following rectifiers are available:

Half-wave rectifier, 6-pole

- Supply voltage / brake coil voltage ratio = 2.22
- Approved by UL / CSA
- Supply voltages
  AC 400 V
  AC 460 V



Bridge rectifier, 6-pole

- Ratio of supply voltage to brake coil voltage = 1.11
- Supply voltage
  AC 230 V



Bridge/half-wave rectifier, 6-pole

- Supply voltage / brake coil voltage ratio
  up to the overexcitation time = 1.11
  From the overexcitation time = 2.22
- Supply voltages
  AC 230 V
  AC 400 V





Spring-applied brake

Assignment of 4-pole motors and brakes

Product	Size	Rated torque
	Brake	
		M_k
		[Nm]
m500-P132M4	14 14 16 16	35.0 60.0 60.0 80.0
m500-P132L4	14 14 16 16 16	35.0 60.0 60.0 80.0 100
m500-P160M4	16 16 18 18	60.0 80.0 80.0 150
m500-P160L4	18 18 18	80.0 150 200
m500-P180M4	18 18 20 20	80.0 150 145 260
m500-P180L4	18 18 20 20 20	80.0 150 145 260 315
m500-P180V4	18 18 20 20 20 20	80.0 150 145 260 315 400
m500-P200M4	18 18 20 20 20 20	80.0 150 145 260 315 400
m500-P225M4	25 25 25	265 400 490
m500-P225L4	25 25 25 25	265 400 490 600



Spring-applied brake

Permissible friction energy

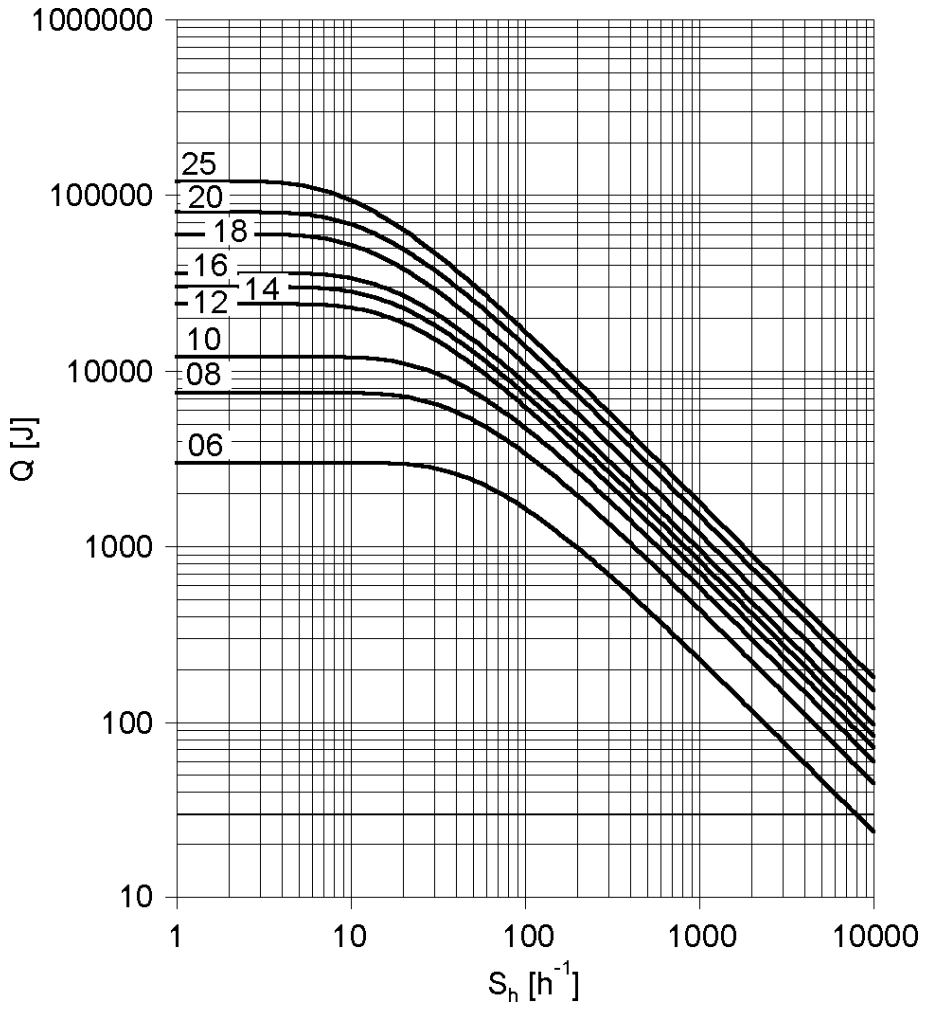

Q =Switching energy per switching cycle
S_h =Operating frequency
Brake size = 06 to 25



Spring-applied brake

Rated data with reduced braking torque

► Please enquire for braking torques and maximum switching work values not listed here.

Size			06	08	10	12	14	16	18	20	25
Power input											
	P_{in}	[kW]	0.020	0.025	0.030	0.040	0.050	0.055	0.085	0.10	0.11
Braking torque											
100	M_B	[Nm]	2.50	3.50	7.00	14.0	35.0	60.0	80.0	145	265
1000	M_B	[Nm]	2.30	3.10	6.10	12.0	30.0	50.0	65.0	115	203
1200	M_B	[Nm]	2.30	3.10	6.00	12.0	29.0	48.0	63.0	112	199
1500	M_B	[Nm]	2.20	3.00	5.80	11.0	28.0	47.0	61.0	109 [1)]	193 [1)]
1800	M_B	[Nm]	2.10	2.90	5.70	11.0	28.0	46.0	60.0 [1)]		
3000	M_B	[Nm]	2.00	2.80	5.30	10.0	26.0 [1)]	43.0 [1)]			
3600	M_B	[Nm]	2.00	2.70	5.20	10.0 [1)]					
Maximum switching energy											
100	Q_E	[KJ]	3.00	7.50	12.0	24.0	30.0	36.0	60.0	80.0	120
1000	Q_E	[KJ]	3.00	7.50	12.0	24.0	30.0	36.0	60.0	80.0	120
1200	Q_E	[KJ]	3.00	7.50	12.0	24.0	30.0	36.0	60.0	80.0	120
1500	Q_E	[KJ]	3.00	7.50	12.0	24.0	30.0	36.0	60.0	24.0 [1)]	36.0 [1)]
1800	Q_E	[KJ]	3.00	7.50	12.0	24.0	30.0	36.0	36.0 [1)]		
3000	Q_E	[KJ]	3.00	7.50	12.0	24.0	18.0 [1)]	11.0 [1)]			
3600	Q_E	[KJ]	3.00	7.50	12.0	7.00 [1)]					
Transition operating frequency											
	$S_{hü}$	[1/h]	79.0	50.0	40.0	30.0	28.0	27.0	20.0	19.0	15.0
Moment of inertia											
	J	[kgcm²]	0.015	0.061	0.20	0.45	0.63	1.50	2.90	7.30	20.0
Mass											
	m	[kg]	0.90	1.50	2.60	4.20	5.80	8.70	12.6	19.5	31.0

[1)] In the region of the load limit the value for friction energy Q_{BW} can be reduced to 40 %.



Spring-applied brake

Rated data with reduced braking torque

► Activation via half-wave or bridge rectifier

Size										
			06	08	10	12	14	16	18	20	25
Friction energy											
	Q_{BW}	[MJ]	113	210	264	706	761	966	1542	2322	3522
Delay time											
Engaging	t_{11}	[ms]	11.0	14.0	20.0	21.0	37.0	53.0	32.0	47.0	264
Rise time											
Braking torque	t_{12}	[ms]	13.0	10.0	17.0	19.0	22.0	30.0	20.0	100	120
Engagement time											
	t_1	[ms]	24.0		37.0	40.0	59.0	83.0	52.0	147	384
Disengagement time											
	t_2	[ms]	35.0	37.0	57.0	65.0	148	169	230	207	269

► Activation via bridge/half-wave rectifier

Design										
			Holding current reduction (cold brake)								
Size										
			06	08	10	12	14	16	18	20	25
Friction energy											
	Q_{BW}	[MJ]	113	210	264	706	761	966	1542	2322	3522
Overexcitation time											
	$t_{ü}$	[ms]	300				1300				
Min. rest time											
	t	[ms]	900				3900				
Delay time											
Engaging	t_{11}	[ms]	12.0	22.0	35.0	49.0	61.0	114	83.0	126	304
Rise time											
Braking torque	t_{12}	[ms]	14.0	16.0	30.0	45.0	37.0	65.0	52.0	269	138
Engagement time											
	t_1	[ms]	26.0	38.0	66.0	93.0	97.0	180	134	395	443
Disengagement time											
	t_2	[ms]	35.0	37.0	57.0	65.0	148	169	230	207	269

► The brake response and application times are guide values. The engagement time is 10 times longer with AC-side switching. With the maximum air gap the disengagement time t_2 – depending on the brake and control – is up to 4 times longer than the disengagement time with the rated air gap.



Spring-applied brake

Rated data with standard braking torque

► Please enquire for braking torques and maximum switching work values not listed here.

Size			06	08	10	12	14	16	18	20	25
Power input											
	P_{in}	[kW]	0.020	0.025	0.030	0.040	0.050	0.055	0.085	0.10	0.11
Braking torque											
100	M_B	[Nm]	4.00	8.00	16.0	32.0	60.0	80.0	150	260	400
1000	M_B	[Nm]	3.70	7.20	14.0	27.0	51.0	66.0	121	206	307
1200	M_B	[Nm]	3.60	7.00	14.0	27.0	50.0	65.0	118	201	300
1500	M_B	[Nm]	3.50	6.80	13.0	26.0	48.0	63.0	115	195 [1)]	291 [1)]
1800	M_B	[Nm]	3.40	6.70	13.0	26.0	47.0	61.0	112 [1)]		
3000	M_B	[Nm]	3.20	6.30	12.0	24.0	44.0 [1)]	57.0 [1)]			
3600	M_B	[Nm]	3.20	6.10	12.0	23.0 [1)]					
Maximum switching energy											
100	Q_E	[KJ]	3.00	7.50	12.0	24.0	30.0	36.0	60.0	80.0	120
1000	Q_E	[KJ]	3.00	7.50	12.0	24.0	30.0	36.0	60.0	80.0	120
1200	Q_E	[KJ]	3.00	7.50	12.0	24.0	30.0	36.0	60.0	80.0	120
1500	Q_E	[KJ]	3.00	7.50	12.0	24.0	30.0	36.0	60.0	24.0 [1)]	36.0 [1)]
1800	Q_E	[KJ]	3.00	7.50	12.0	24.0	30.0	36.0	36.0 [1)]		
3000	Q_E	[KJ]	3.00	7.50	12.0	24.0	18.0 [1)]	11.0 [1)]			
3600	Q_E	[KJ]	3.00	7.50	12.0	7.00 [1)]					
Transition operating frequency											
	$S_{hü}$	[1/h]	79.0	50.0	40.0	30.0	28.0	27.0	20.0	19.0	15.0
Moment of inertia											
	J	[kgcm²]	0.015	0.061	0.20	0.45	0.63	1.50	2.90	7.30	20.0
Mass											
	m	[kg]	0.90	1.50	2.60	4.20	5.80	8.70	12.6	19.5	31.0

[1)] In the region of the load limit the value for friction energy Q_{BW} can be reduced to 40 %.



Spring-applied brake

Rated data with standard braking torque

► Activation via half-wave or bridge rectifier

Size			06	08	10	12	14	16	18	20	25
Friction energy											
	Q_{BW}	[MJ]	85.0	158	264	530	571	966	1542	2322	3522
Delay time											
Engaging	t_{11}	[ms]	15.0		28.0		17.0	27.0	33.0	65.0	110
Rise time											
Braking torque	t_{12}	[ms]	13.0	16.0	19.0	25.0		30.0	45.0	100	120
Engagement time											
	t_1	[ms]	28.0	31.0	47.0	53.0	42.0	57.0	78.0	165	230
Disengagement time											
	t_2	[ms]	45.0	57.0	76.0	115	210	220	270	340	390

► Activation via bridge/half-wave rectifier

Design			Holding current reduction (cold brake)								
Size			06	08	10	12	14	16	18	20	25
Friction energy											
	Q_{BW}	[MJ]	85.0	158	264	530	571	966	1542	2322	3522
Overexcitation time											
	$t_{ü}$	[ms]	300				1300				
Min. rest time											
	t	[ms]	900				3900				
Delay time											
Engaging	t_{11}	[ms]	16.0	25.0	31.0	48.0	33.0	58.0	80.0	102	154
Rise time											
Braking torque	t_{12}	[ms]	14.0	27.0	21.0	43.0	49.0	64.0	109	157	168
Engagement time											
	t_1	[ms]	30.0	52.0		90.0	82.0	122	189	259	322
Disengagement time											
	t_2	[ms]	45.0	57.0	76.0	115	210	220	270	340	390

► The brake response and application times are guide values. The engagement time is 10 times longer with AC-side switching. With the maximum air gap the disengagement time t_2 – depending on the brake and control – is up to 4 times longer than the disengagement time with the rated air gap.



Spring-applied brake

Rated data with increased braking torque

► Please enquire for braking torques and maximum switching work values not listed here.

Size			10	12	14	16	16	18	20	20	25	25
Power input												
	P_{in}	[kW]	0.030	0.040	0.050	0.055	0.055	0.085	0.10	0.10	0.11	0.11
Braking torque												
100	M_B	[Nm]	23.0	46.0	75.0	100	125	200	315	400	490	600
1000	M_B	[Nm]	20.0	39.0	64.0	83.0	103	162	249	317	376	461
1200	M_B	[Nm]	20.0	39.0	62.0	81.0	101	158	244	309	367	449
1500	M_B	[Nm]	19.0	38.0	60.0	78.0	98.0	153	237 [1]	300 [1]	356 [1]	436 [1]
1800	M_B	[Nm]	19.0	37.0	59.0	77.0	96.0	150 [1]				
3000	M_B	[Nm]	17.0	34.0	55.0 [1]	71.0 [1]	89.0 [1]					
3600	M_B	[Nm]	17.0	33.0 [1]								
Maximum switching energy												
100	Q_E	[KJ]	12.0	24.0	30.0	36.0	36.0	60.0	80.0	80.0	120	120
1000	Q_E	[KJ]	12.0	24.0	30.0	36.0	36.0	60.0	80.0	80.0	120	120
1200	Q_E	[KJ]	12.0	24.0	30.0	36.0	36.0	60.0	80.0	80.0	120	120
1500	Q_E	[KJ]	12.0	24.0	30.0	36.0	36.0	60.0	24.0 [1]	24.0 [1]	36.0 [1]	36.0 [1]
1800	Q_E	[KJ]	12.0	24.0	30.0	36.0	36.0	36.0 [1]				
3000	Q_E	[KJ]	12.0	24.0	18.0 [1]	11.0 [1]	11.0 [1]					
3600	Q_E	[KJ]	12.0	7.00 [1]								
Transition operating frequency												
	$S_{hü}$	[1/h]	40.0	30.0	28.0	27.0	27.0	20.0	19.0	19.0	15.0	15.0
Moment of inertia												
	J	[kgcm²]	0.20	0.45	0.63	1.50	1.50	2.90	7.30	7.30	20.0	20.0
Mass												
	m	[kg]	2.60	4.20	5.80	8.70	8.70	12.6	19.5	19.5	31.0	31.0

[1] In the region of the load limit the value for friction energy Q_{BW} can be reduced to 40 %.

► Activation via half-wave or bridge rectifier

Size			10	12	14	16		18	20		25	
Friction energy												
	Q_{BW}	[MJ]	198	353	253	563	241	578	1596	580	2465	1409
Delay time												
Engaging	t_{11}	[ms]	10.0	16.0	11.0	22.0	17.0	24.0	46.0	17.0	77.0	38.0
Rise time												
Braking torque	t_{12}	[ms]	19.0	25.0		30.0		45.0	100		120	
Engagement time												
	t_1	[ms]	29.0	41.0	36.0	52.0	47.0	69.0	146	117	197	158
Disengagement time												
	t_2	[ms]	109	193	308	297	435	356	378	470	451	532



Spring-applied brake

Rated data with increased braking torque

► Activation via bridge/half-wave rectifier

Design			Holding current reduction (cold brake)									
Size			10	12	14	16		18	20		25	
Friction energy												
	Q_{BW}	[MJ]	198	353	253	563	241	578	1596	580	2465	1409
Overexcitation time												
	$t_{ü}$	[ms]	300			1300						
Min. rest time												
	t	[ms]	900			3900						
Delay time												
Engaging	t_{11}	[ms]	24.0	27.0	17.0	41.0	21.0	60.0	69.0	17.0	123	85.0
Rise time												
Braking torque	t_{12}	[ms]	44.0	43.0	37.0	55.0	37.0	113	148	100	190	270
Engagement time												
	t_1	[ms]	68.0	70.0	54.0	97.0	57.0	173	217	334	313	355
Disengagement time												
	t_2	[ms]	109	193	308	297	435	356	378	470	451	532

Design			Over-excitation									
Size			10	12	14	16		18	20		25	
Friction energy												
	Q_{BW}	[MJ]	264	706	761	966		1542	2322		3522	
Overexcitation time												
	$t_{ü}$	[ms]	300			1300						
Min. rest time												
	t	[ms]	900			3900						
Delay time												
Engaging	t_{11}	[ms]	29.0	54.0	31.0	70.0	46.0	86.0	103	55.0	171	135
Rise time												
Braking torque	t_{12}	[ms]	53.0	87.0	68.0	93.0	83.0	160	222	319	266	430
Engagement time												
	t_1	[ms]	82.0	141	99.0	163	129	246	325	374	437	565
Disengagement time												
	t_2	[ms]	53.0	81.0	117	141	168	151	160	167	184	204

► The brake response and application times are guide values. The engagement time is 10 times longer with AC-side switching. With the maximum air gap the disengagement time t_2 – depending on the brake and control – is up to 4 times longer than the disengagement time with the rated air gap.



Spring-applied brake

Manual release

By actuating the manual release lever, the brake can be released manually during operation at zero current. Manual release facilitates positioning and maintenance work.

Manual release lever for IEC motors

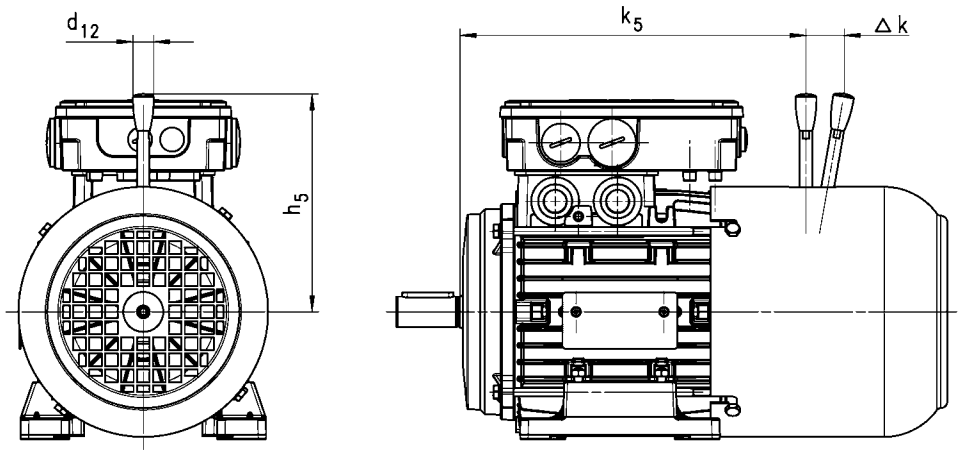

	Size	Dimensions			
	Brake				
		k_5	Δ k	h_5	d_{12}
		[mm]	[mm]	[mm]	[mm]
m500-P132M4	14 16	405 407	41 55	195 240	24.0 24.0
m500-P132L4	14 16	405 407	41 55	195 240	24.0 24.0
m500-P160M4	16 18	479 484	55 59	240 279	24.0 24.0
m500-P160L4	18	484	59	279	24.0
m500-P180M4	18 20	552 559	59 74	279 319	24.0 24.0
m500-P180L4	18 20	552 559	59 74	279 319	24.0 24.0
m500-P200M4	18 20	620 626	59 74	279 319	24.0 24.0
m500-P225M4	25	650	103	445	24.0
m500-P225L4	25	650	103	445	24.0

The following combinations with manual release lever and motor connection in the same position are not possible:
- HAN connector with connection in position 1



Spring-applied brake

Manual release

Manual release lever for geared motors

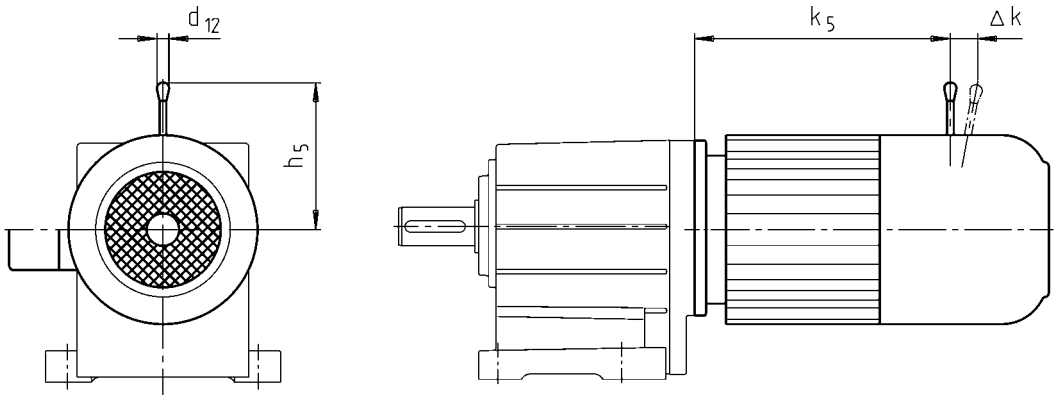

	Size	Dimensions			
	Brake				
		k_5	Δk	h_5	d_{12}
		[mm]	[mm]	[mm]	[mm]
m500-P132M4	14 16	403 406	41 55	195 240	24.0 24.0
m500-P132L4	14 16	403 406	41 55	195 240	24.0 24.0
m500-P160M4	16 18	512 517	55 59	240 279	24.0 24.0
m500-P160L4	18	517	59	279	24.0
m500-P180M4	18 20	574 581	59 74	279 319	24.0 24.0
m500-P180L4	18 20	574 581	59 74	279 319	24.0 24.0
m500-P180V4	18 20	624 630	59 74	279 319	24.0 24.0
m500-P225M4	25	704	103	445	24.0
m500-P225L4	25	704	103	445	24.0

The following combinations with manual release lever and motor connection in the same position are not possible:
- HAN connector with connection in position 1



Temperature monitoring

To protect the motor against overheating, the following thermal sensors are provided.
The thermal sensors are integrated into the windings. We recommend using an additional motor protection switch.

TKO thermal contacts

The TCO thermal contact (thermal NC contact) is a bimetallic-element switch. The TCO monitors the motor winding temperature; at too high temperatures, the motor relay switches. The motor is disconnected from the mains.

Function	Operating temperature	Min. reset temperature	Max. reset temperature	Max. input current	Max. input voltage
					AC
	T	T_{min}	T_{max}	$I_{in,max}$	$U_{in,max}$
	-5 ... 5				
	[°C]	[°C]	[°C]	[A]	[V]
NC contact	150	90.0	135	2.50	250

PTC thermistor

The PTC thermistor is actuated in connection with a tripping unit. If the motor gets too hot, the motor can be switched off by means of a contactor. In contrast to the thermal contact, quick restart is possible.

Function	Operating temperature	Rated resistance			Standard
		155 °C	-20 °C	140 °C	
	T	R_N	R_N	R_N	
	-5 ... 5				
	[°C]	[Ω]	[Ω]	[Ω]	
Sudden change in resistance	150	550	30.0	250	DIN 44080 DIN VDE 0660 Part 303



Temperature monitoring

KTY temperature sensor

The KTY thermal detectors work as continuously variable resistors, showing a similar tendency as PTC thermistors. However, with an increasing temperature, the resistance only increases comparatively slowly, enabling the controller to determine the temperature at regular intervals and to already perform a process evaluation at an early stage. In this way, the motor can already be switched off before it is overheated.

	Function	Rated resistance			Max. input current	
		25 °C	150 °C	170 °C	25 °C	170 °C
		R_N	R_N	R_N	$I_{in,max}$	$I_{in,max}$
		[Ω]	[Ω]	[Ω]	[A]	[A]
KTY83-110	Continuous resistance change	1000	2225	2471	0.010	0.002
KTY84-130	Continuous resistance change	603	1334	1482	0.010	0.002

Variation of resistance

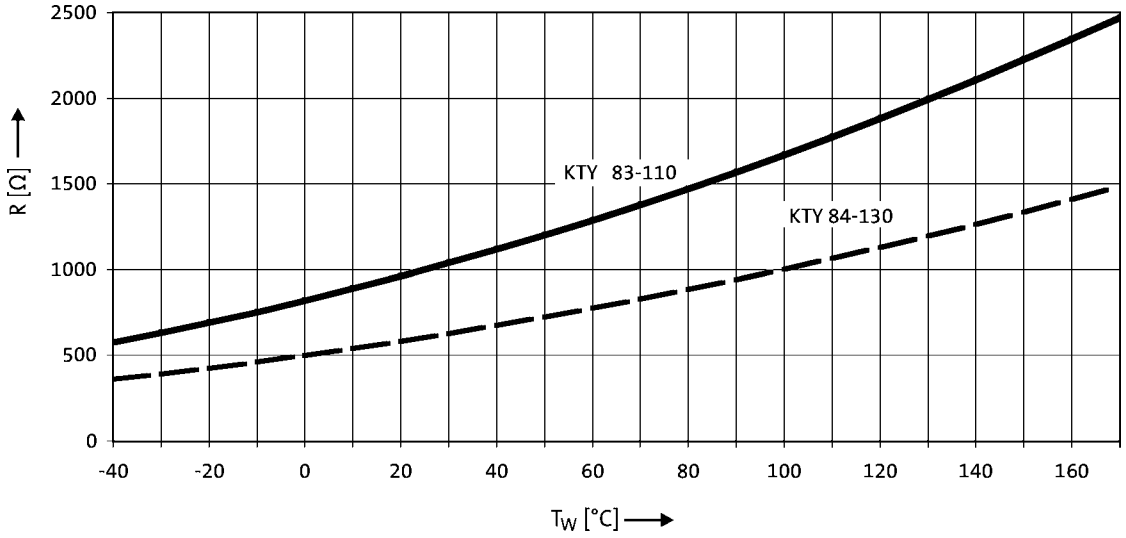

► If the detector is supplied with a measured current of 1 mA, the above relationship between the temperature and the resistance applies.



Blower

During operation with the rated torque at low speeds (< 20 Hz), the integral fan does not rotate fast enough anymore to ensure sufficient cooling of the motor. In order to prevent overheating, operation without a blower requires a torque reduction of the motor.
The blower cools the motor steadily and irrespective of the motor speed. A torque reduction is not required and the motor can be actuated with its rated torque from 5 Hz to the rated frequency.

Rated data for 50 Hz

Product	Number of phases	Connection method				
			$U_{N, AC}$	P_N	I_N	m
			[V]	[kW]	[A]	[kg]
m500-P132L4 m500-P132M4	1		230	0.11	0.48	4.20
	3	Δ		0.10	0.32	
		Y	400		0.19	
m500-P160M4 m500-P160L4	1		230	0.12	0.54	6.20
	3	Δ			0.38	
		Y	400		0.22	
m500-P180M4 m500-P180L4 m500-P180V4	1		230	0.22	0.96	8.00
	3	Δ		0.20	0.63	
		Y	400		0.36	
m500-P200M4	1		230	0.22	0.96	
	3	Δ		0.20	0.63	
		Y	400		0.36	
m500-P225L4 m500-P225M4		Δ	230		0.63	15.0
		Y	400		0.36	

Rated data for 60 Hz

Product	Number of phases	Connection method				
			$U_{N, AC}$	P_N	I_N	m
			[V]	[kW]	[A]	[kg]
m500-P132L4 m500-P132M4	3	Y	460	0.17	0.25	4.20
m500-P160M4 m500-P160L4				0.19	0.30	6.20
m500-P180M4 m500-P180L4 m500-P180V4				0.34	0.48	8.00
m500-P200M4						
m500-P225L4 m500-P225M4						15.0



Feedback

Depending on the application, the following resolvers, incremental encoders or absolute value encoders are provided for speed and position detection.

Resolver

The stator-supplied resolver with two stator windings shifted by 90° and a rotor winding with transformer winding can detect both the speed and the rotor position. The rotor position is retained in the event of a voltage failure.

► The three-phase AC motors with resolver cannot be used for speed-dependent safety functions in connection with the SM 301 safety module.

Product key				
				RS1
Accuracy				
			[']	-10 ... 10
Absolute positioning				
				1 revolution
Max. input voltage				
DC	$U_{in,max}$		[V]	10.0
Max. input frequency				
	$f_{in,max}$		[kHz]	4.00
Ratio				
Stator / rotor		± 5 %		0.30
Rotor impedance				
	Z_{ro}		[Ω]	51 + j90
Stator impedance				
	Z_{so}		[Ω]	102 + j150
Impedance				
	Z_{rs}		[Ω]	44 + j76
Min. insulation resistance				
At DC 500 V	R		[MΩ]	10.0
Number of pole pairs				
				1



Feedback

Incremental encoder and SinCos absolute value encoder

Incremental encoders can only be used for speed measurement, but not for speed control. Homing is required in order to enable positioning later.

Absolute value encoders can detect the speed, the rotor position, and the machine position with a very high resolution. They are used for the positioning of dynamic applications and do not require homing.

► The three-phase AC motors with incremental encoders or SinCos absolute value encoders cannot be used for speed-dependent safety functions in connection with the SM 301 safety module.

Encoder type			HTL incremental				TTL incremental			SinCos absolute value
Product key			IG128-24V-H	IG512-24V-H	IG1024-24V-H	IG2048-24V-H	IG512-5V-T	IG1024-5V-T	IG2048-5V-T	AM1024-8V-H
Encoder type										Multi-turn
Pulses			128	512	1024	2048	512	1024	2048	1024
Output signals			HTL				TTL			1 Vss
Interfaces			A, B track	A, B, N track and inverted						Hiperface
Absolute revolutions			0							4096
Accuracy		[']	-22.5 ... 22.5	-2 ... 2						-0.8 ... 0.8
Min. input voltage										
DC	$U_{in,min}$	[V]	8.00				4.75			7.00
Max. input voltage										
DC	$U_{in,max}$	[V]	26.0	30.0			5.25			12.0
Max. current consumption										
	I_{max}	[A]	0.040	0.15						0.080
Limit frequency										
	f_{max}	[kHz]	30.0	160			300			200
Inverter assignment			E84AVSC E84AVHC	E84AVHC			E84AVTC E94A ECS EVS93			

Inverters
- Inverter Drives 8400 StateLine (E84AVSC)
- Inverter Drives 8400 HighLine (E84AVHC)
- Inverter Drives 8400 TopLine (E84AVTC)

Servo-Inverters
- Servo Drives 9400 (E94A)
- 9300 servo inverters (EVS93)
- Servo Drives ECS

13478280

Lenze SE
Hans-Lenze-Straße 1
D-31855 Aerzen
Phone: +49 (0)5154 82-0
Telefax: +49 (0)5154 82 28 00

www.Lenze.com