L-force catalogue

Automation systems
Drive solutions

Controls
Inverters
Motors
Gearboxes
Engineering Tools

Motors: MH three-phase AC motors, MD three-phase AC motors

Gearboxes: GST helical gearboxes, GFL shaft-mounted helical gearboxes

Lenze
As easy as that.

Contents of the L-force catalogue

About Lenze		Lenze makes many things easy for you.	
		A matter of principle: the right products for every application.	
		L-force product portfolio	
Automation systems		Controller-based Automation	1.1
		Drive-based automation	1.2
Drive solutions		HighLine tasks	2.1
		StateLine tasks	2.2
		BaseLine tasks	2.3
Controls	Cabinet Controller	Controller 3200 C	3.1
		I/O system 1000	3.2
	Panel Controller	Controller p500	3.3
		Monitor Panel	3.4
Inverters	Decentralised	Inverter Drives 8400 protec	4.1
		Inverter Drives 8400 motec	4.2
		Inverter Drives SMV IP65	4.3
	Cabinet	Servo Drives 9400 HighLine	4.4
		Inverter Drives 8400 TopLine	4.5
		Servo Inverters i700	4.6
		Inverter Drives 8400 HighLine	4.7
		Inverter Drives 8400 StateLine	4.8
		Inverter Drives SMV IP31	4.9
		Inverter Drives 8400 BaseLine	4.10
Motors	Servo motors	MCS synchronous servo motors	5.1
		MD□KS synchronous servo motors	5.2
		MQA asynchronous servo motors	5.3
		MCA asynchronous servo motors	5.4
	Three-phase AC motors	MF three-phase AC motors	5.5
		MH three-phase AC motors	5.6
		MD three-phase AC motors	5.7
		m300 Lenze Smart Motor	5.8
		MD/MH basic three-phase AC motors	5.9
Gearboxes	Axial gearbox	g700-P planetary gearbox	6.1
		MPR/MPG planetary gearboxes	6.2
		g500-H helical gearbox	6.3
		GST helical gearboxes	6.4
		g500-S shaft-mounted helical gearbox	6.5
		GFL shaft-mounted helical gearboxes	6.6
	Right-angle gearbox	g500-B bevel gearbox	6.7
		GKR bevel gearboxes	6.8
		GKS helical-bevel gearboxes	6.9
		GSS helical-worm gearboxes	6.10
	Motor data	Assignment see above	6.11
Engineering Tools		Navigator	7.1
		Drive Solution Designer	7.2
		Drive Solution Catalogue	7.3
		Engineer	7.4
		PLC Designer	7.5
		VisiWinNET®	7.6
		EASY Starter	7.7

Selected portfolio

Additional portfolio

Lenze makes many things easy for you.

With our motivated and committed approach, we work together with you to create the best possible solution and set your ideas in motion - whether you are looking to optimise an existing machine or develop a new one. We always strive to make things easy and seek perfection therein. This is anchored in our thinking, in our services and in every detail of our products. It's as easy as that!

1

Developing ideas

Are you looking to build the best machine possible and already have some initial ideas? Then get these down on paper together with us, starting with small innovative details and stretching all the way to completely new machines. Working together, we will develop an intelligent and sustainable concept that is perfectly aligned with your specific requirements.

2

Drafting concepts

We see welcome challenges in your machine tasks, supporting you with our comprehensive expertise and providing valuable impetus for your innovations. We take a holistic view of the individual motion and control functions here and draw up consistent, end-to-end drive and automation solutions for you - keeping everything as easy as possible and as extensive as necessary.

3

Implementing solutions

Our easy formula for satisfied customers is to establish an active partnership with fast decision-making processes and an individually tailored offer. We have been using this simple principle to meet the ever more specialised customer requirements in the field of mechanical engineering for many years.

4

Manufacturing machines

Functional diversity in perfect harmony: as one of the few full-range providers in the market, we can provide you with precisely those products that you actually need for any machine task – no more and no less. Our L-force product portfolio, a consistent platform for implementing drive and automation tasks, is invaluable in this regard.

5

Ensuring productivity

Productivity, reliability and new performance peaks on a daily basis – these are our key success factors for your machine. After delivery, we offer you cleverly devised service concepts to ensure continued safe operation. The primary focus here is on technical support, based on the excellent application expertise of our highly-skilled and knowledgeable after-sales team.

A matter of principle: the right products for every application.

Lenze's extensive L-force product portfolio follows a very simple principle. The functions of our finely scaled products are assigned to the three lines Base-Line, State-Line or High-Line.

But what does this mean for you? It allows you to quickly recognise which products represent the best solution for your own specific requirements.

Powerful products with a major impact:
- Easy handling
- High quality and durability
- Reliable technologies in tune with the latest developments

Lenze products undergo the most stringent testing in our own laboratory. This allows us to ensure that you will receive consistently high quality and a long service life. In addition to this, five logistics centres ensure that the Lenze products you select are available for quick delivery anywhere across the globe. It's as easy as that!

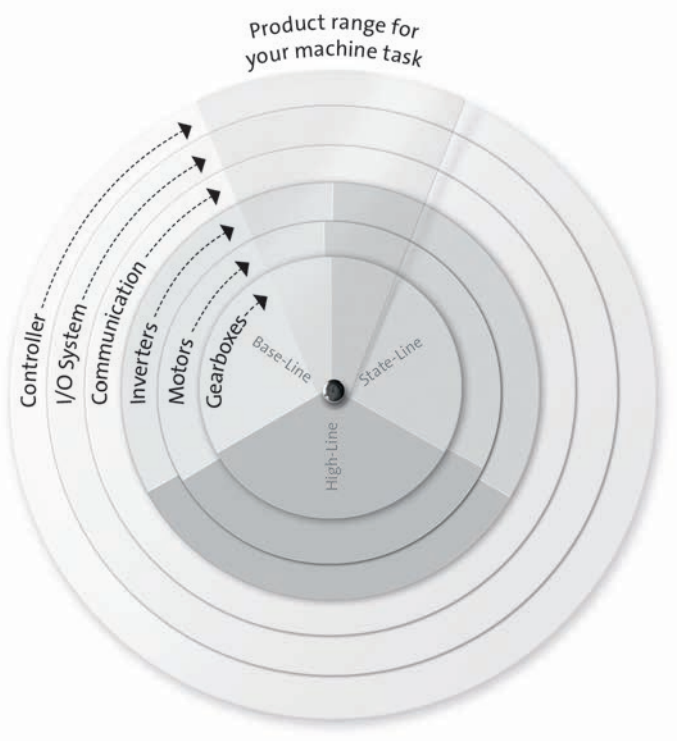

L-force product portfolio

Controls

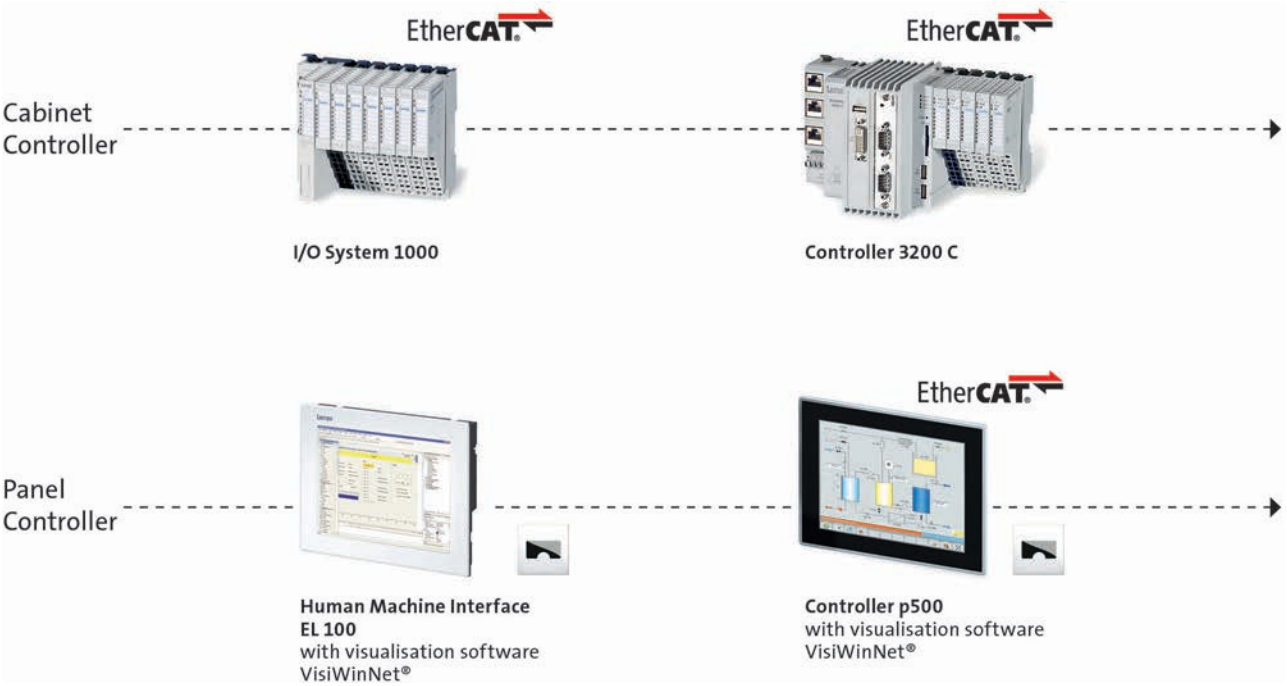

Engineering Tools

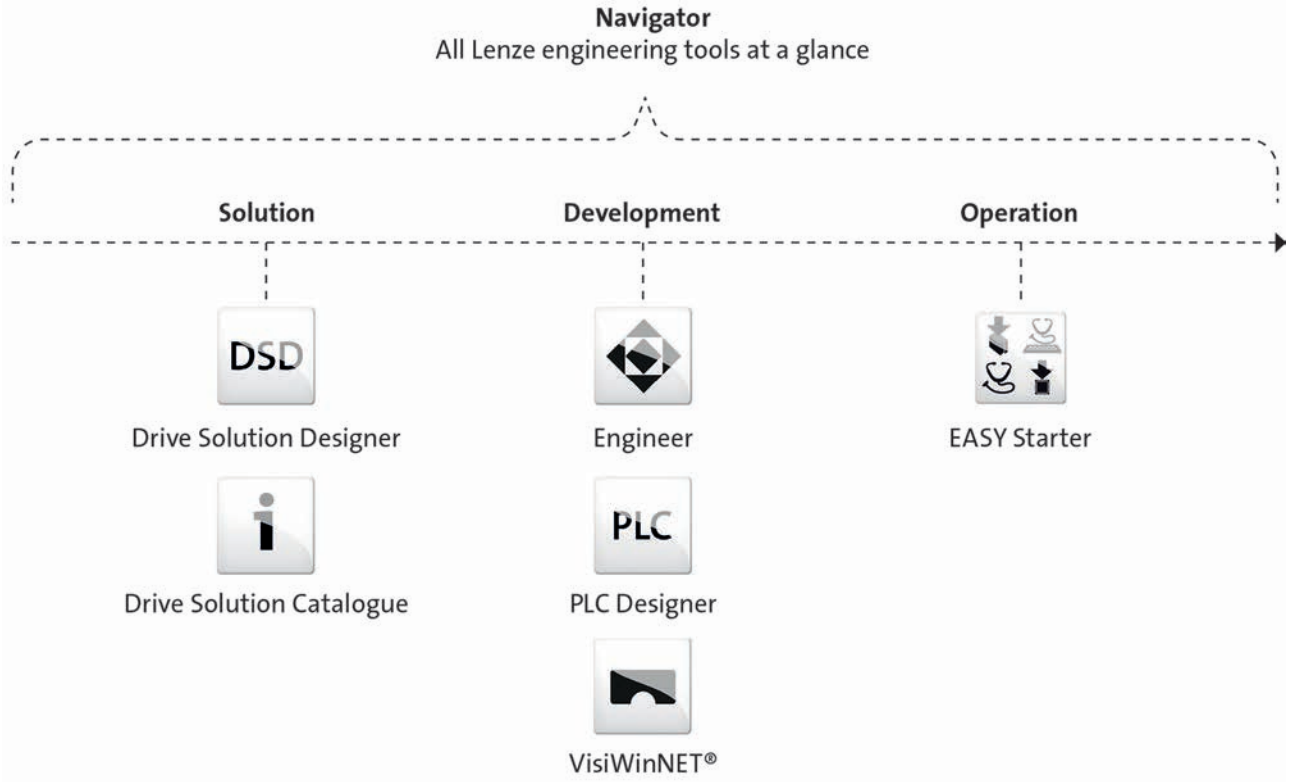

L-force product portfolio

Inverters

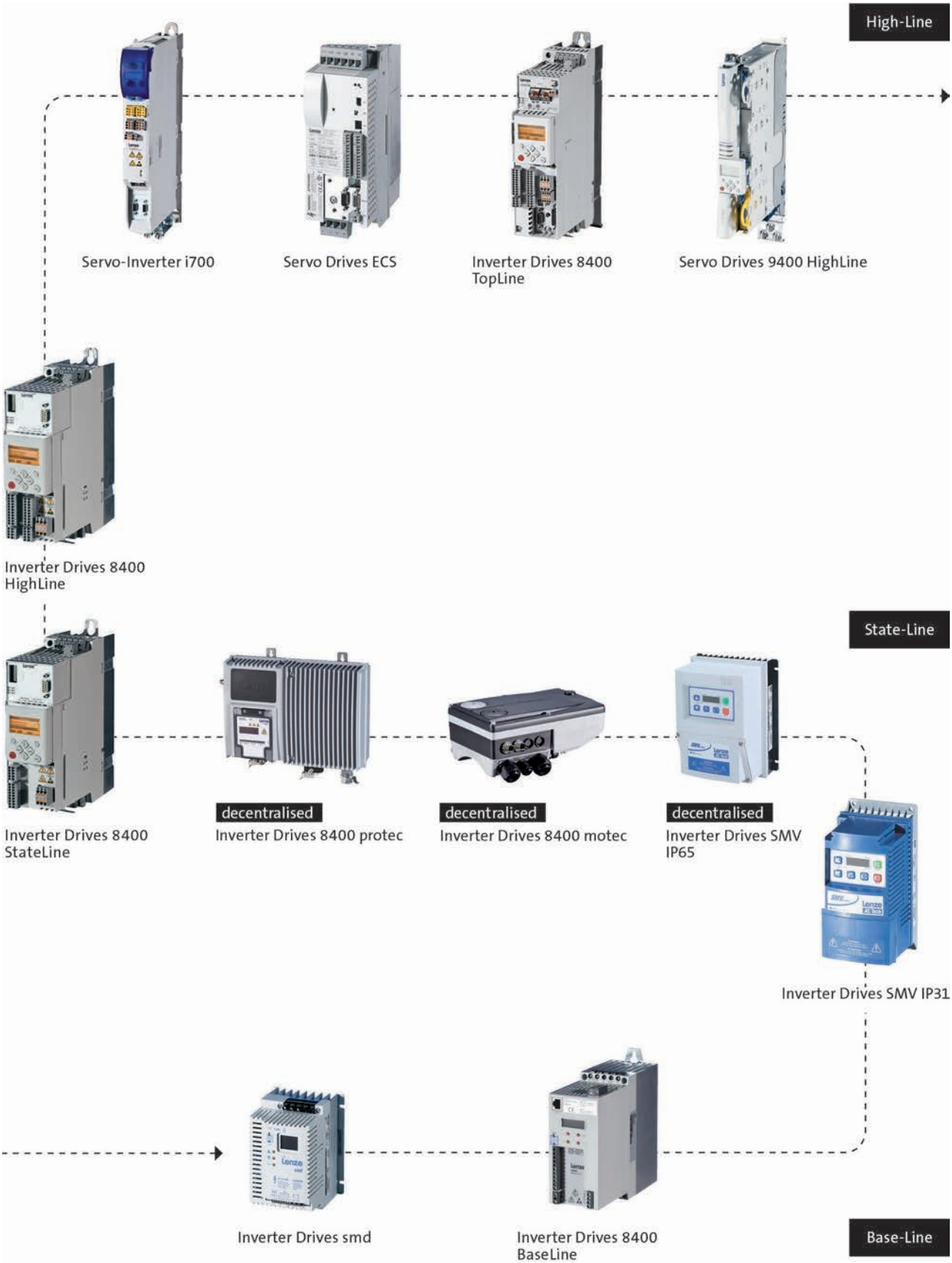

L-force product portfolio

Motors

High-Line

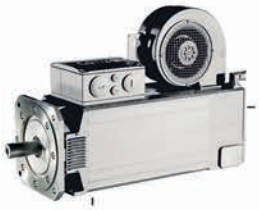

MQA asynchronous servo motors



SDSGS synchronous servo motors



MDXKS synchronous servo motors



Synchronous servo motors MCS



Asynchronous servo motors MCA



Asynchronous servo motors SDSGA

State-Line



MF three-phase AC motors



MH three-phase AC motors



MD three-phase AC motors



Basic MD/MH three-phase AC motors

Base-Line

L-force product portfolio

Gearboxes

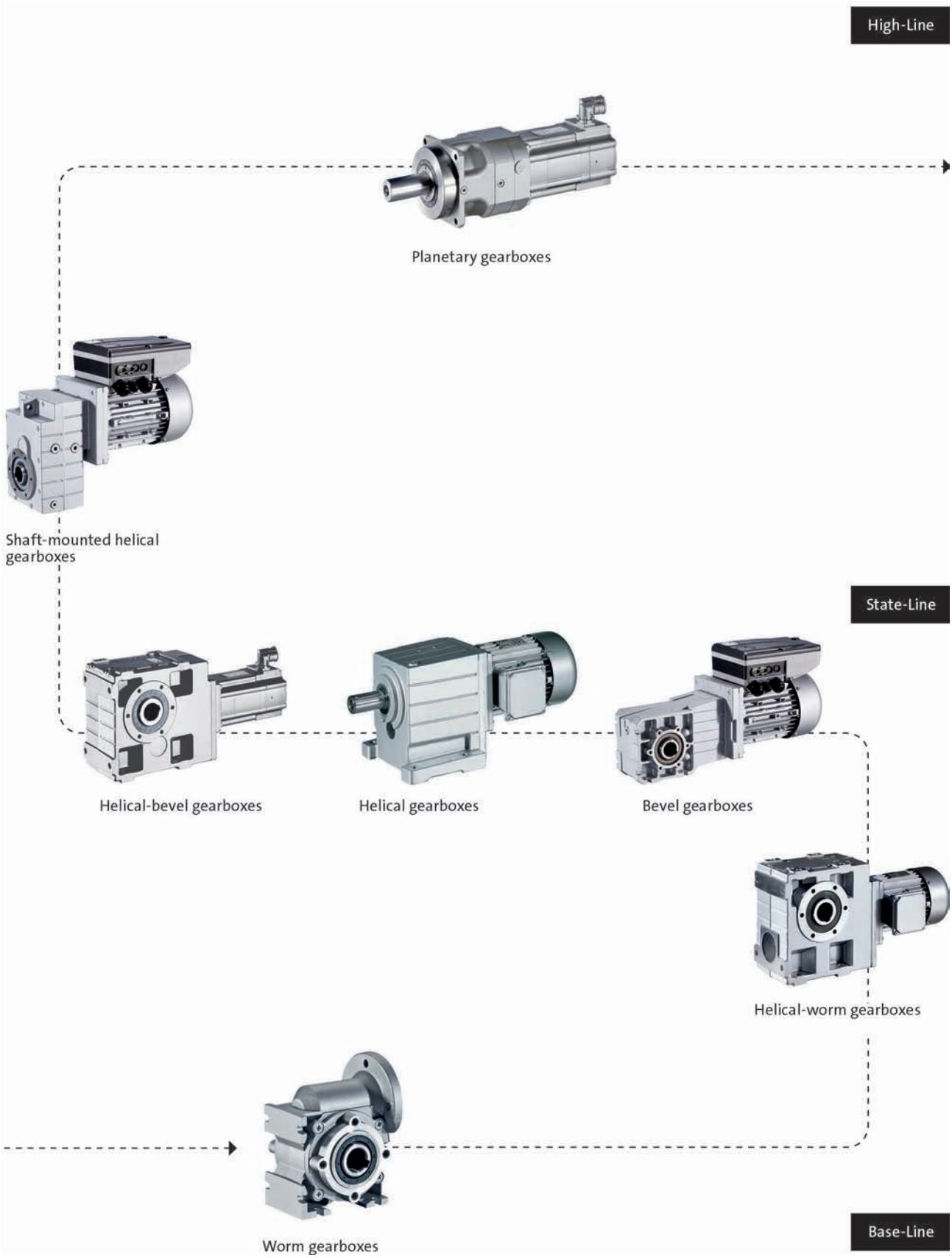

GST helical gearboxes

MD/MH three-phase AC motors
0.06 to 0.55 kW
0.75 to 45 kW (IE2)

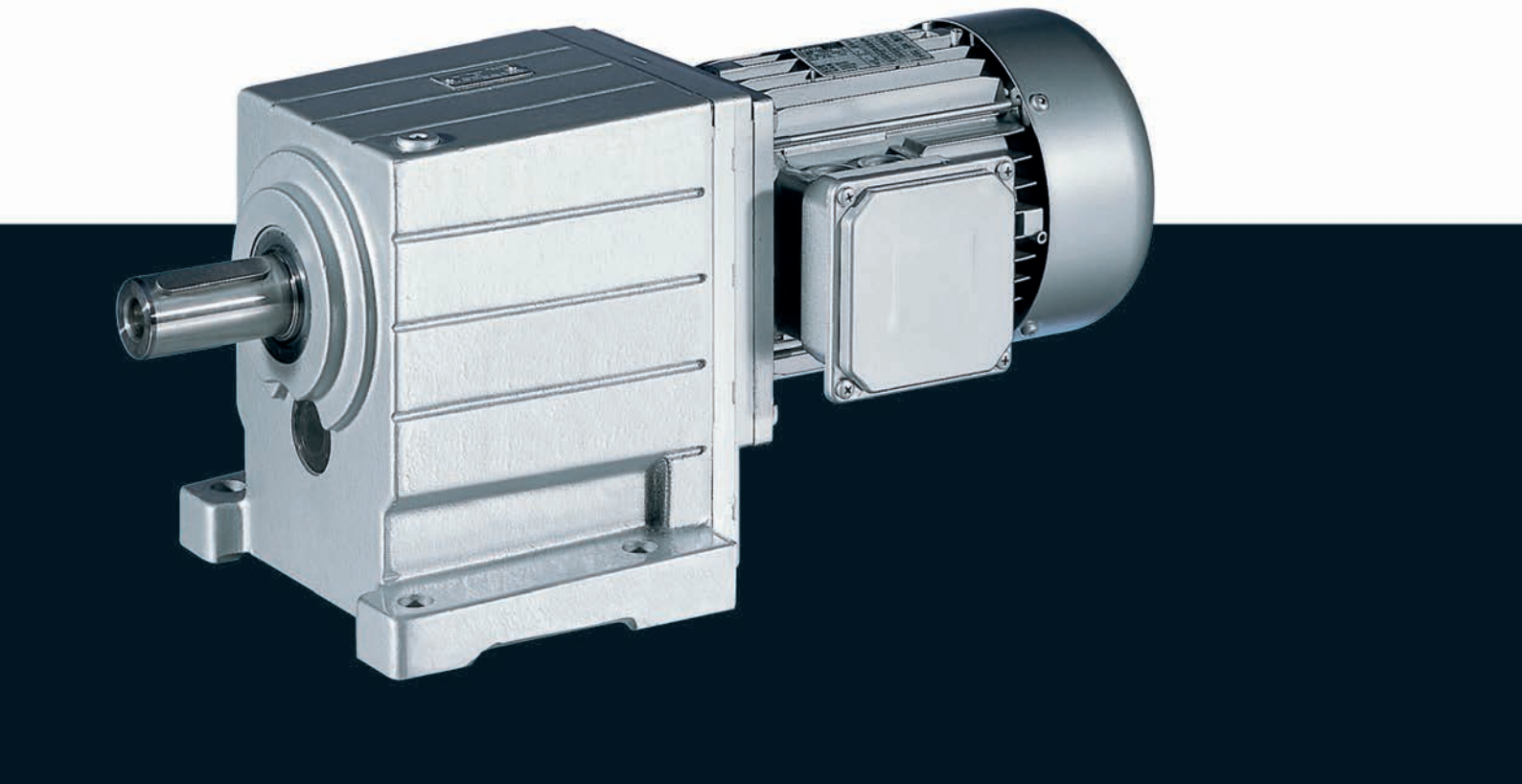

GST helical gearboxes



Contents

General information	List of abbreviations	6.4 - 4
	Product key	6.4 - 5
	Product information	6.4 - 7
	Functions and features	6.4 - 8
	Dimensioning	6.4 - 13
	Notes on ordering	6.4 - 19
	Ordering details checklist	6.4 - 20
Technical data	Permissible radial and axial forces at output	6.4 - 25
	Output backlash in angular minutes	6.4 - 29
	Moments of inertia	6.4 - 31
	Weights	6.4 - 38
	Selection tables	6.4 - 44
	Dimensions	6.4 - 112
Accessories	GST□□-2/3M VAR	6.4 - 149
	GST□□-2/3M VAL	6.4 - 150
	Ventilations	6.4 - 151



List of abbreviations

$\eta_{c=1}$		Efficiency
c		Load capacity
f_N	[Hz]	Rated frequency
$F_{ax,max}$	[N]	Max. axial force
$F_{rad,max}$	[N]	Max. radial force
H_{max}	[m]	Site altitude
i		Ratio
J	[kgcm²]	Moment of inertia
m	[kg]	Mass
M_2	[Nm]	Output torque
n_2	[r/min]	Output speed
n_N	[r/min]	Rated speed
P_N	[kW]	Rated power
$S_{hü}$	[1/h]	Transition operating frequency
$T_{opr,max}$	[°C]	Max. ambient operating temperature
$T_{opr,min}$	[°C]	Min. ambient operating temperature
$U_{N,\Delta}$	[V]	Rated voltage
$U_{N,Y}$	[V]	Rated voltage

CE	Communauté Européenne
CSA	Canadian Standards Association
DIN	Deutsches Institut für Normung e.V.
EMC	Electromagnetic compatibility
EN	European standard
IEC	International Electrotechnical Commission
IM	International Mounting Code
IP	International Protection Code
NEMA	National Electrical Manufacturers Association
UL	Underwriters Laboratory Listed Product
UR	Underwriters Laboratory Recognized Product
VDE	Verband deutscher Elektrotechniker (Association of German Electrical Engineers)
CCC	China Compulsory Certificate
GOST	Certificate for Russian Federation
cURus	Combined certification marks of UL for the USA and Canada
UkrSEPRO	Certificate for Ukraine



Product key

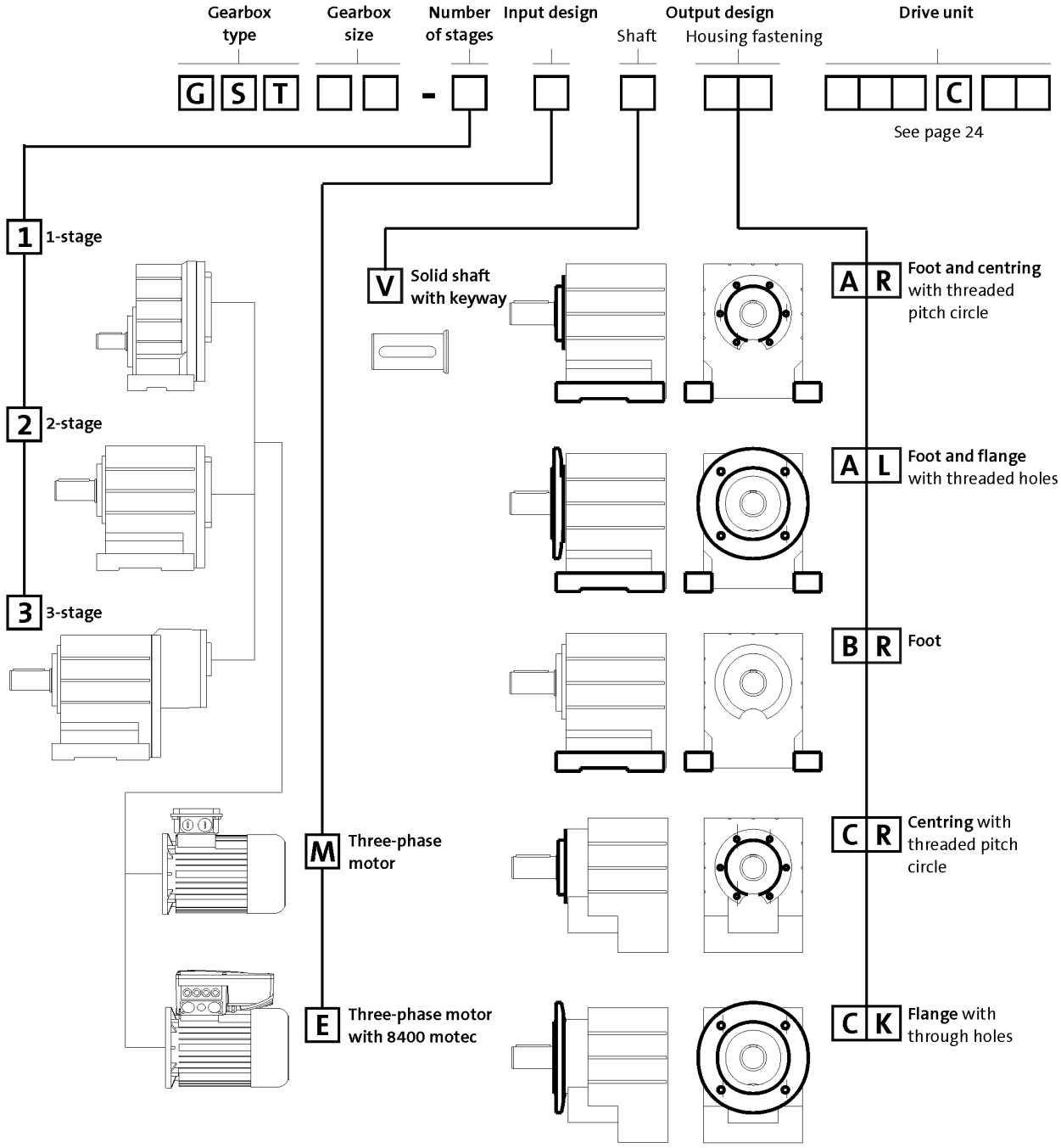

	Output design		
	V	K	L
	d x l [mm]	Øa2 [mm]	Øa2 [mm]
GST03-2	14x28	120/140/160	
	20x40	120/140/160	
GST04-1	16x32	120/140/160	
GST04-2	20x40	120/140/160	120/140
GST05-1	20x40	120/140/160/200	
GST05-2/3	25x50	120/140/160/200	120/140/160
GST06-1	25x50	160/200	

	Output design		
	V	K	L
	d x l [mm]	Øa2 [mm]	Øa2 [mm]
GST06-2/3	30x60	160/200	160/200
GST07-1	30x60	200/250	
GST07-2/3	40x80	200/250	200/250
GST09-1	40x80	250/300	
GST09-2/3	50x100	250/300	250/300
GST11-2/3	60x120	300/350	300/350
GST14-2/3	80x160	350/400	350/400



Product key

Mounting position (A...F) and position of system blocks (1...6)

A	B	C
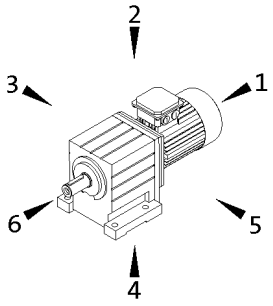	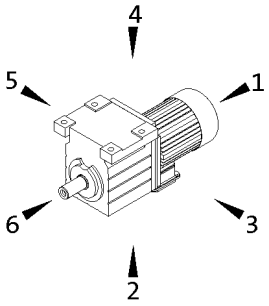	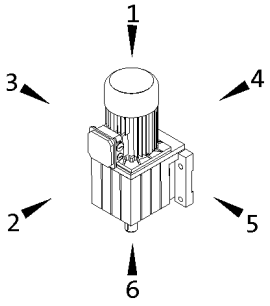
D	**E**	**F**
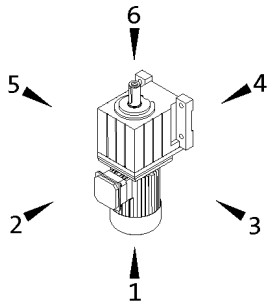	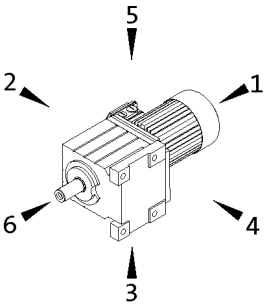	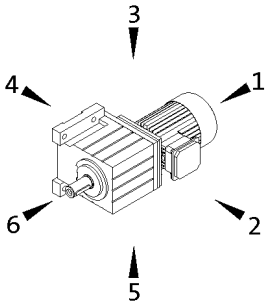

Terminal box / motec: 2, 3, 4, 5

Gearbox designs

Basic versions	
Motor efficiency	Standard efficiency Increased efficiency (IE2)
Surface and corrosion protection	No OKS (unpainted, aluminium housing) for GST03 OKS-G (primer: grey) OKS-S (paint: RAL 7012)
Lubricant	CLP 460 (mineral)
Ventilation	Oil control plugs for GST05 ... 14 Breather elements for GST06 ... 14

Options	
Surface and corrosion protection	OKS-G (primer: grey) for GST03-2 OKS-S (special paint according to RAL) OKS-M (special paint according to RAL) OKS-L (special paint according to RAL)
Lubricant	CLP HC 320 (synthetic) CLP HC 220 USDA H1 (synthetic)
Shaft sealing rings	Driven shaft: Viton
Bearings	Driven shaft: reinforced for GST04 ... 09-2/3
Ventilation	Breather elements for GST05 Compensation reservoir for GST09 ... 14-2 in mounting position C
Nameplate	Metal nameplate (supplied loose) Adhesive nameplate (supplied loose)



Product information

Lenze provides a geared motor construction kit, which covers a wide range of requirements. Numerous drive-side and output-side options enable precise adaptation of the drive to the specific application. This is the basis for versatile applications and functional scalability of our gearboxes and geared motors.
The modular concept and high power density make extremely compact sizes possible. Optimised teeth profiles and ground gears ensure low-noise operation and low backlash. The gearboxes are of compact and hence space-saving construction.

Robust design with high efficiency

Together with three-phase AC motors, our helical gearboxes form a compact and powerful drive unit. They are rugged in design and feature high permissible radial forces, closely stepped speed reduction ratios and minimum backlash. The gearboxes are available as 1 and 2 and 3-stage versions with a torque of up to 5,920 Nm and a ratio of up to i= 435.

Inverters for motor-proximity installation

The Drive Package with decentralised Inverter Drives 8400 motec covers a power range up to 7.5 kW.

Designs

- 1-stage, 2-stage and 3-stage gearboxes
- Solid shaft with keyway
- Foot or flange mounting
- With three-phase AC motors MD in the power range 0.06 ... 0.55 kW
- With three-phase AC motors MH (efficiency class IE2) in the power range 0.75 ... 45 kW

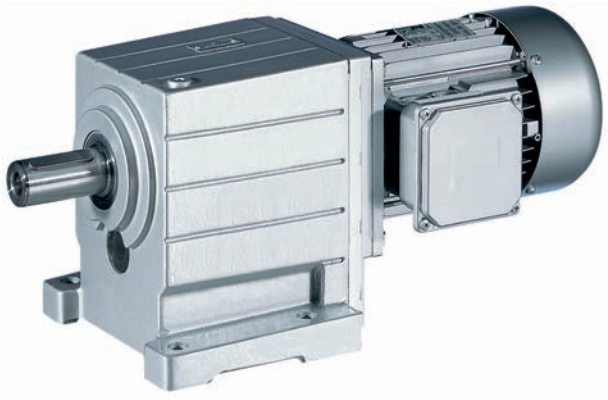

Helical geared motor GST07-2M VBR 100-32



Functions and features

Gearbox type	GST
Housing	
Design	Cuboid
Material	Aluminium / cast iron
Solid shaft	
Design	with keyway to DIN 6885
Tolerance	m6 (d > 50 mm) k6 (d ≤ 50 mm)
Material	Tempered steel C45 or 42CrMo4
Hollow shaft	
Design	
Tolerance	
Material	
Toothed parts	
Design	Optimised tooth flanks and profile geometry Ground tooth flanks
Material	Case-hardened steel
Shaft-hub joint	
	1st stage/prestage/helical (bevel) gearbox: Friction-type connection Output stage (= 2nd, 3rd or 4th stage): Friction-type or positive-fit connection
Shaft sealing rings	
Design	With dust lip
Material	NB / FP
Bearing	
Design	Ball bearing / tapered-roller bearing depending on size and design
Lubricants	
Standard	DIN 51502
Quantities	corresponding to mounting position (see operating instructions)
Mechanical efficiency	
1-stage gearboxes [$\eta_{c=1}$]	0.98
2-stage gearboxes [$\eta_{c=1}$]	0.97
3-stage gearboxes [$\eta_{c=1}$]	0.95
4-stage gearboxes [$\eta_{c=1}$]	
Notes	



Functions and features

Lubricants

Lenze gearboxes and geared motors are ready for operation on delivery and are filled with lubricants specific to both the drive and the design. The mounting position and design specified in the order are key factors in choosing the volume of lubricant.

The lubricants listed in the lubricant table are approved for use in Lenze drives.

Lubricant table

Mode	CLP 460	CLP HC 320	CLP HC 220 USDA H1
Ambient temperature [°C]	0 ... +40	-25 ... +50	-20 ... +40
Specification	Mineral based oil with additives	Synthetic-based oil (synthetic hydrocarbon / poly-alpha-olefin oil)	
Note			For food processing industry
Changing interval	16000 operating hours not later than after three years (oil temperature 70...80 °C)	25000 operating hours not later than after three years (oil temperature 70...80 °C)	16000 operating hours not later than after three years (oil temperature 70...80 °C)
Fuchs	Fuchs Renolin CLP 460	Fuchs Renolin Unisyn CLP 320	bremer & leguil Cassida Fluid GL 220
Klüber	Klüberoil GEM1-460 N	Klübersynth GEM4-320 N	Klüberoil 4 UH1-220 N
Shell	Shell Omala 460	Shell Omala Oil HD 320	

► Please contact your Lenze office if you are operating at ambient temperatures in areas up to < -20 °C > or up to +40°C.



Functions and features

Surface and corrosion protection

For optimum protection of geared motors against ambient conditions, the surface and corrosion protection system (OKS) offers tailor-made solutions.

Various surface coatings combined with other protective measures ensure that the geared motors operate reliably even at high air humidity, in outdoor installations or in the presence of atmospheric impurities. Any colour from the RAL Classic collection can be chosen for the top coat. The geared motors are also available unpainted (no surface and corrosion protection).

Surface and corrosion protection system	Applications	Measures
	Catalogue text	Catalogue text
OKS-G (primed)	• Dependent on subsequent top coat applied	• 1K priming coat (grey) • Zinc-coated screws • Rust-free breather elements Optional measures • Stainless steel nameplate
OKS-S (small)	• Standard applications • Internal installation in heated buildings • Air humidity up to 90%	• Surface coating as per corrosivity category C1 (in line with EN 12944-2) • Zinc-coated screws • Rust-free breather elements Optional measures • Stainless steel nameplate
OKS-M (medium)	• Internal installation in non-heated buildings • Covered, protected external installation • Air humidity up to 95%	• Surface coating as per corrosivity category C2 (in line with EN 12944-2) • Zinc-coated screws • Rust-free breather elements Optional measures • Stainless steel shaft • Stainless steel nameplate • Rust-free shrink disc (on request)
OKS-L (high)	• External installation • Air humidity above 95% • Chemical industry plants • Food industry	• Surface coating as per corrosivity category C3 (in line with EN 12944-2) • Blower cover and B end shield additionally primed • Cable glands with gaskets • Corrosion-resistant brake with cover ring, stainless friction plate, and chrome-plated armature plate (on request) • All screws/screw plugs zinc-coated • Stainless breather elements • Threaded holes that are not used are closed by means of plastic plugs Optional measures • Sealed recesses on motor (on request) • Stainless steel shaft • Stainless steel nameplate • Rust-free shrink disc (on request) • Additional priming coat on cast iron fan • Oil expansion tank and torque plates painted separately and supplied loose



Functions and features

Structure of surface coating

Surface and corrosion protection system	Corrosivity category	Surface coating	Colour
	DIN EN ISO 12944-2	Structure	
Without OKS (uncoated)		Dipping primed gearbox	
OKS-G (primed)		Dipping primed gearbox 1K priming coat	
OKS-S (small)	C1	Dipping primed gearbox 2K-PUR top coat	Standard: RAL 7012 Optional: RAL Classic
OKS-M (medium)	C2	Dipping primed gearbox 1K priming coat 2K-PUR top coat	Standard: RAL 7012 Optional: RAL Classic
OKS-L (high)	C3	Dipping primed gearbox 2K-EP priming coat 2K-PUR top coat	Standard: RAL 7012 Optional: RAL Classic

► The gearboxes GST 03 have an aluminium housing, therefore a dipping primer is dispensed with in the case of these gearboxes.



Functions and features

Ventilation

Gearboxes without ventilation
No ventilation is required for gearboxes GST03 ... 04.

Gearboxes that may optionally be equipped with ventilation
Special measures are not usually required when using gearbox GST05. In borderline cases, e.g. at input speeds > 2000 r/min, we recommend the use of breather elements which we can supply if required.

Gearboxes with ventilation
Gearboxes GST06...14 are supplied with breather elements as standard.

Special measures for mounting position C (motor on top)
We recommend that an oil compensation reservoir is always used with gearbox sizes G□□09...14 in this mounting position. This reservoir can be purchased as an option. For illustrations and measures see accessories chapter.

This is not required at higher ratios or low input speeds. Please contact Lenze in this event.



Dimensioning

General information about the data provided in this catalogue

Powers, torques and speeds
The powers, torques and speeds specified in this catalogue are rounded values and are valid under the following conditions:

- Operating time/day = 8 h (100% OT)
- Duty class I for up to 10 switching operations/h
- Mounting positions and designs in this catalogue
- Standard lubricant
- T_{amb} = 20 °C for gearboxes,
  T_{amb} = 40 °C for motors (in accordance with EN 60034)
- Site altitude < = 1000 m amsl
- The selection tables provide the permissible mechanical powers and torques. For notes on the thermal power limit, see chapter drive dimensioning.
- The rated power specified for motors and geared motors applies to operating mode S1 (in accordance with EN 60034).

Under different operating conditions, the values obtained may vary from those listed here.
In the case of extreme operating conditions, please consult your Lenze sales office.



Dimensioning

Thermal power limit

The thermal power limit, defined by the heat balance, limits the permissible gearbox continuous power. It may be less than the mechanical power ratings listed in the selection tables.

The thermal power limit is affected by:
- the churning losses in the lubricant. These are determined by the mounting position and the circumferential speed of the wheels
- the load and the speed
- the ambient conditions: temperature, air circulation, input or dissipation via shafts and the foundation

Please consult your Lenze subsidiary
- if the following input speeds n_1 are exceeded on a continuous basis (continuous is defined as more than 8 h/day):

Motor frame size	Mounting position A, B, E, F	Mounting position C, D
063 ... 100	3000 r/min	3000 r/min
112 ... 132	3000 r/min	1500 r/min
160 ... 225	2000 r/min	1500 r/min

- if the following input speeds n_1 are exceeded:

Motor frame size	Mounting position A, B, E, F	Mounting position C, D
063 ... 100	4000 r/min	3000 r/min
112 ... 132	4000 r/min	2000 r/min
160 ... 225	3000 r/min	1500 r/min

- or if you are using the following gearbox type, size and ratio combinations at an input speed of n_1 > 1500 r/min:

Gearbox type	Gearbox size	Ratio i
GST helical gearbox	07, 09, 11, 14	≤ 10

Possible ways of extending the application area

- synthetic lubricant (option)
- shaft sealing rings made from FP material/Viton (option)
- reduction in lubricant quantity
- cooling of the geared motor by means of air convection on the machine/system



Dimensioning

Load capacity and application factor

Load capacity c of gearbox
Rated value for the load capacity of Lenze geared motors.
- c is the ratio of the permissible rated torque of the gearbox to the rated torque supplied by the drive component (e.g. the built-in Lenze motor).
- The value of c must always be greater than the value of the application factor k calculated for the application.

Application factor k (according to DIN 3990)
Takes into account the influence of temporally variable loads which are actually present during the anticipated operating time of gearboxes and geared motors.
k is determined by:
- the type of load
- the load intensity
- temporal influences

Duty class	Load type
I	Smooth operation, small or light jolts
II	Uneven operation, average jolts
III	Uneven operation, severe jolts and/or alternating load

Application factor k

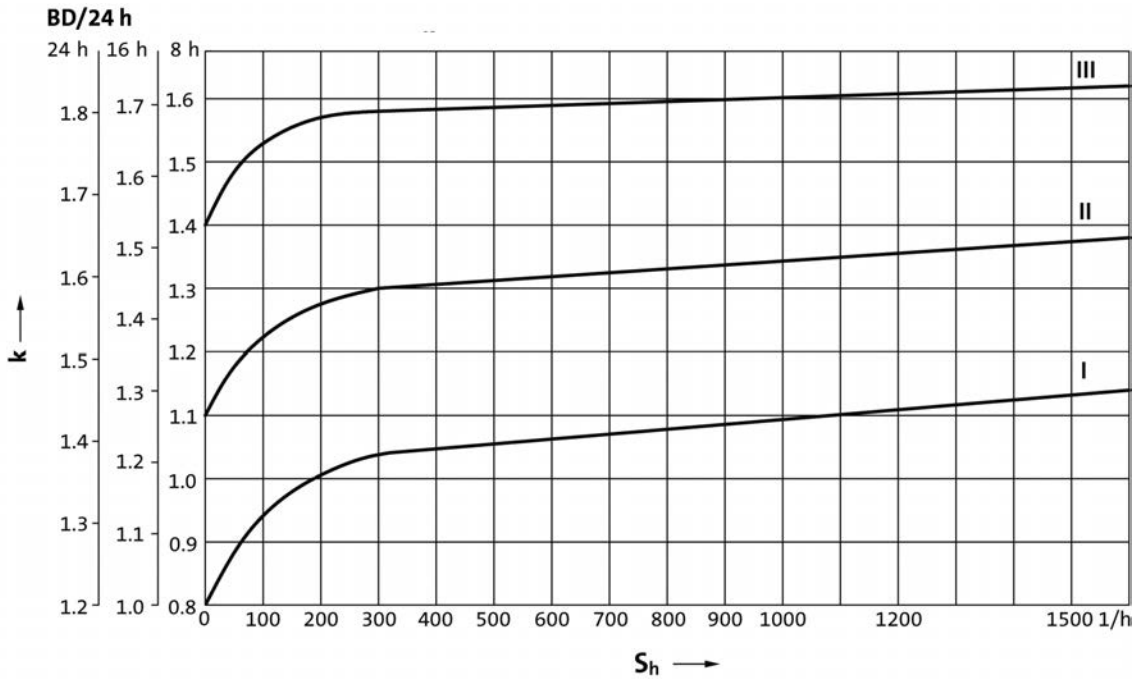

6.4

Dimensioning

Torque derating at low motor frequencies

Motor size-dependent torque reduction, taking into account the thermal response during operation on the inverter.

Torque characteristics

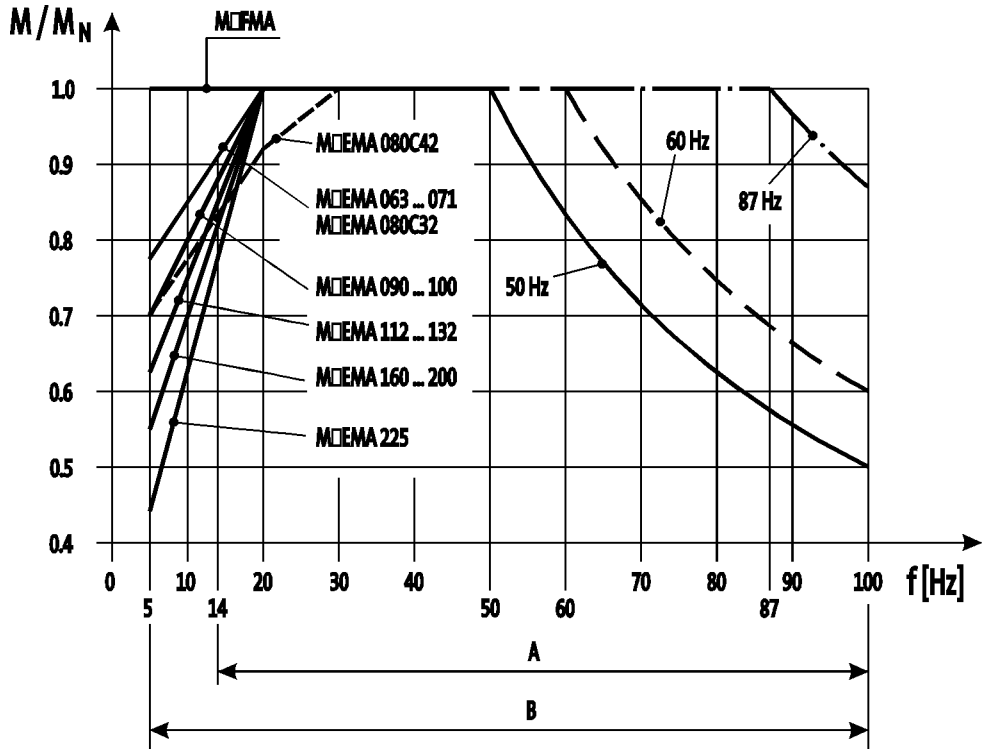

A = Operation with integral fan and brake
B = Operation with integral fan and brake control "Holding current reduction"

You can use the Drive Solution Designer for precise drive dimensioning.

6.4

The Drive Solution Designer helps you to carry out a fast and high-quality drive dimensioning.
The software includes well-founded and proven knowledge on drive applications and electro-mechanical drive components.

Please contact your Lenze sales office.



Dimensioning

Notes on the selection tables

The selection tables show the available combinations of gearbox type, number of stages, ratio and motor. The following legend indicates the structure of the selection tables.

Gearbox type

GST helical gearbox

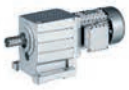

Technical data

Selection tables

Rated speed n_N of the drive motor

Product key of geared motor

Rated power P_N of the drive motor in relation to the rated frequency

► 50 Hz, 60 Hz: P_N = 0.75 kW

n_N	1410 r/min			1720 r/min			i		
f_N	50 Hz			60 Hz					
	n_2 [r/min]	M_2 [Nm]	c	n_2 [r/min]	M_2 [Nm]	c			
	881	8.0	2.4	1069	6.6	2.8	1.600	GST04-1M □□□080C32	76
	689	10	2.2	835	8.4	2.6	2.048	GST04-1M □□□080C32	76

Output speed n_2

Ratio i

Page number for dimensions

Output torque M_2 (constant for all listed frequencies)

The load capacity c of the gearbox c is the ratio of the gearbox's rated torque to the rated torque of the three-phase motor (calculated in respect of its application to the output shaft). c must always be greater than the application factor k determined for the application

$$c = \frac{M_{2,zul}}{M_{1N} \cdot i \cdot \eta_{Getr}} > k$$

6.4



Dimensioning

Notes on the selection tables

Motor voltages

The power values and torques indicated in the selection tables relate to the following motor voltages:
- 50 Hz : Δ 230 V / Y 400 V
- 60 Hz : Δ 265 V / Y 460 V
- 87 Hz : Δ 400 V

Operation at 87 Hz

In 87 Hz operation, the three-phase AC motor (which is designed for a voltage of Δ 230 V / Y 400 V at 50 Hz) is operated on an inverter with 400 V rated voltage in a delta connection. It is important to note here that the inverter must be configured for 87Hz output.
This offers the following advantages over 50 Hz operation:
- the setting range of the motor is increased by a factor of 1.73.
- the motor can then provide around 1.73 times greater output, which in turn allows a smaller and more affordable motor to be selected for the application.
- the efficiency of the motor is also improved.



Notes on ordering

We want to be sure that you receive the correct products in good time.

To allow us to achieve this we need:
- your address and your company data
- our product key for the individual products in this catalogue
- your delivery date and delivery address

Ordering procedure
Please use the ordering information checklist to ensure that you provide all the ordering information required for the various products.

The ordering information checklist, the product key, the basic versions, options, mounting position and position of the system blocks will be found in the General – Product key section.

A list of Lenze's worldwide sales offices can be found on the Internet: www.Lenze.com.



Ordering details checklist

☐ **Offer**

Page __ of __

☐ **Order**

Customer No.

Job No.

Fax No. _____

Sender

Company _____ Made out by (name) _____

Street/P.O. Box _____ Department _____

P.O. Box, City _____ Telephone No. _____

Date _____ Signature _____

Delivery address (if different)

Street/P.O. Box _____ Desired delivery date _____

P.O. Box, City _____ Dispatching notes _____

Invoice recipient (if different)

Street/P.O. Box _____

Postal code, City _____



Ordering details checklist

Customer No.

Job No.

Page __

Quantity

Efficiency class ☐ Standard efficiency ☐ High efficiency (IE2)

Rated frequency ☐ 50 Hz ☐ 60 Hz ☐ 87 Hz

Ratio i

GST ☐☐ – ☐ 1 ☐ 2 ☐ 3 ☐ M ☐ E [☐ V] Solid shaft d = (only with GST03) ☐ mm ☐ A ☐ B ☐ C ☐ R ☐ K ☐ L Flange a_2 = ☐ mm

Motor frame size ☐☐☐C☐☐

Mounting position A ☐ B ☐ C ☐ D ☐ E ☐ F ☐

Position of system blocks Terminal box 2 ☐ 3 ☐ 4 ☐ 5 ☐

Surface and corrosion protection

GST03 ☐ Without OKS (unpainted)

GST04 ... 14 ☐ OKS-S colour: RAL 7012 ☐ OKS-G (primed)

Options

Special lubricants ☐ CLP HC 320 (synthetic) ☐ CLP HC 220 USDA H1 (for the food industry)

Surface and corrosion protection ☐ OKS-S (small) ☐ OKS-M (medium) RAL ☐

☐ OKS-L (high) ☐ OKS-G (primed) only with GST03

Output shaft bearing ☐ Reinforced bearing for GST04 ... 09-2

Shaft sealing rings ☐ Viton

Breathing ☐ Breather elements for GST05 ☐ Compensation reservoir in mounting position for GST 09 ... 14-2

6.4



Ordering details checklist

Three-phase AC motors options

Customer No. ☐☐☐☐☐☐☐☐

Job No. ☐☐☐☐☐☐☐☐☐☐

Page __

Motor connection

Terminal box
- ☐ with plug-in connector ICN 6-pin. Adhere to permissible rated motor current 20 A!
- ☐ with plug-in connector ICN 8-pin. Adhere to permissible rated motor current 20 A!
- ☐ with plug-in connector HAN10E. Adhere to permissible rated current 16 A!
- ☐ with plug-in connector HAN-Modular. Adhere to permissible rated current 16 / 40 A!

Cable entry: only with M□□MAXX/LL063 ... 132 or terminal box with plug-in connector in position 1 ☐ 2 ☐ 3 ☐ 4 ☐ 5 ☐

Blower

☐ 1~ ☐ 3~

☐ Terminal box with plug-in connector ICN

Terminal box position 2 ☐ 3 ☐ 4 ☐ 5 ☐

Spring-applied brake

Brake version: ☐ Standard ☐ Longlife

Brake size: ☐

Characteristic torque: ☐ Nm

Rated voltage: AC ☐ DC ☐ ☐ V

Rectifier: Only in the case of AC supply voltage

- ☐ Half-wave rectifier
- ☐ Bridge rectifier
- ☐ Bridge/half-wave rectifier (overexcitation)
- ☐ Bridge/half-wave rectifier (holding current reduction)

Brake options: Manual release lever in position 2 ☐ 3 ☐ 4 ☐ 5 ☐

☐ Low-noise version (Standard in the case of brake with speed/position encoder)

6.4



Ordering details checklist

Three-phase AC motors options

Customer No. ☐☐☐☐☐☐☐☐

Job No. ☐☐☐☐☐☐☐☐☐☐

Page __

Speed/position encoder

Resolver	☐ RS1				
Incremental encoder HTL	☐ IG128-24V-H	☐ IG512-24V-H	☐ IG1024-24V-H	☐ IG2048-24V-H	
Incremental encoder TTL		☐ IG512-5V-T	☐ IG1024-5V-T	☐ IG2048-5V-T	
Feedback with ICN connector	☐ IG128-24V-H not possible with plug-in connector!				

Motor protection

☐ PTC ☐ KTY 83-110 ☐ KTY 84-130

Approval

☐ UL/CSA approval: cURus ☐ CCC ☐ China Energy Label

Further options

Indication of supply voltage only for motor frame sizes 112C32 to 225C22

☐ Δ; 400V-50Hz; 460V-60Hz

☐ Y/Δ; 400/230V-50Hz; 460/265V-60Hz (-/400V-87Hz possible in operation with frequency inverter)

☐ Protection cover

☐ 2nd shaft end

☐ Handwheel

☐ Increased centrifugal mass

☐ 2nd nameplate (adhesive nameplate/metal nameplate)





Permissible radial and axial forces at output

Permissible radial force
$F_{rad,per} = \min(f_w \times f_\alpha \times F_{rad,max}$; $f_w \times F_{rad,max}$ at $n_2 \leq 50$ r/min)

Permissible axial force
$F_{ax,per} = F_{ax,max}$ if $F_{rad} = 0$

If F_{rad} **and** $F_{ax} \neq 0$, please contact Lenze.

Application of forces

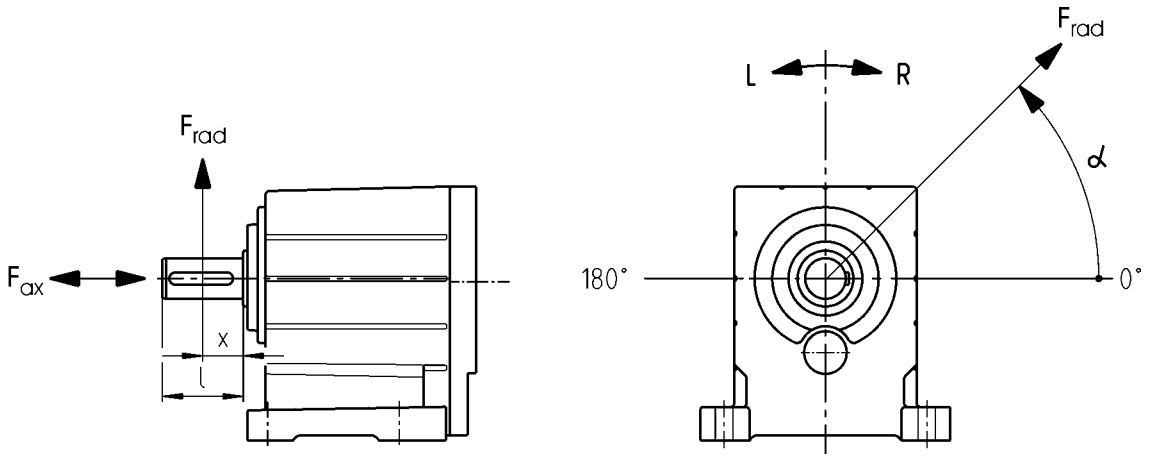

Effective direction factor f_α at output shaft

GST03-2

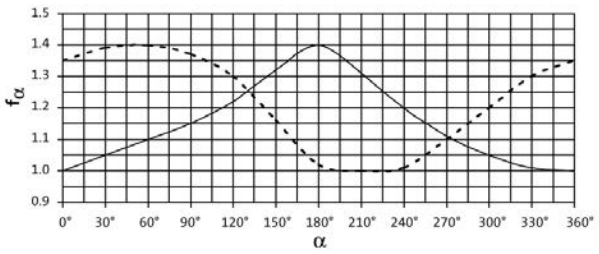

GST04...09-1

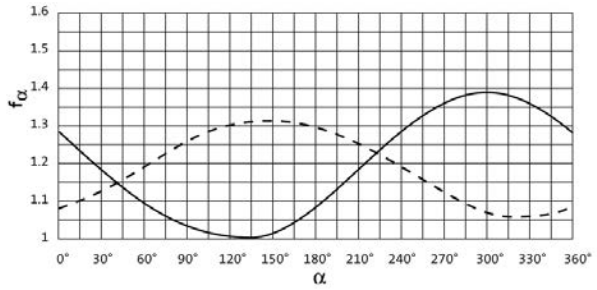

GST04...09-2, 3

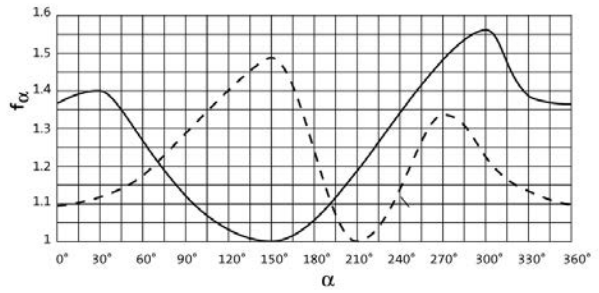

GST11...14-2, 3

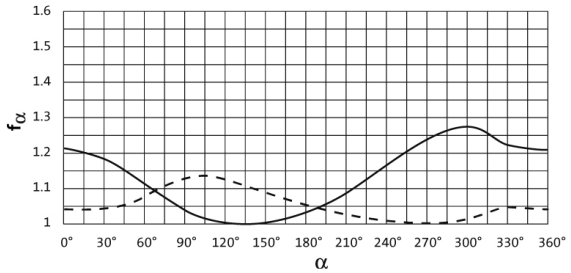

——— Direction of rotation R
— — — Direction of rotation L



Permissible radial and axial forces at output

Additional load factor f_w at output shaft

GST03-2	GST04...09-1, 2, 3
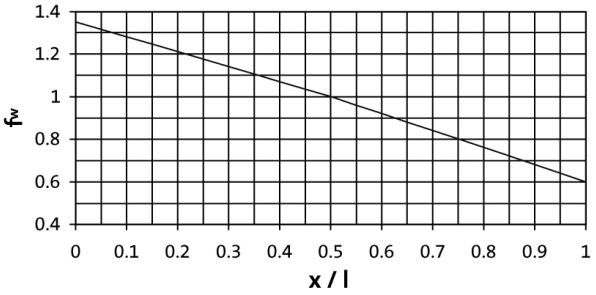	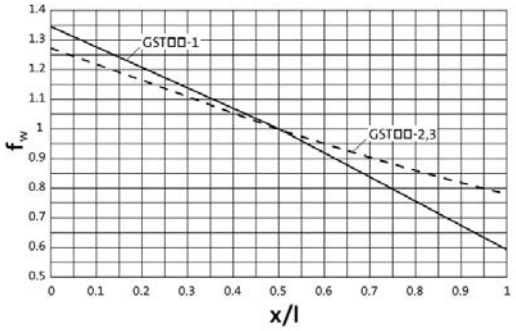

GST□□-1

Size	n_2 [r/min]								
Gearbox	2500	1600	1000	600	400	200	125	80	≤50

	Max. radial force, Solid shaft								
	$F_{rad,max}$	$F_{rad,max}$	$F_{rad,max}$	$F_{rad,max}$	$F_{rad,max}$	$F_{rad,max}$	$F_{rad,max}$	$F_{rad,max}$	$F_{rad,max}$
	[N]	[N]	[N]	[N]	[N]	[N]	[N]	[N]	[N]
GST04	100	180	440	600	850	1050	1050	1050	1050
GST05	100	250	550	750	1400	2000	2300	2300	2300
GST06	200	600	800	800	1100	2200	2900	3500	3500
GST07	700	1000	1200	1300	1900	3000	3900	4700	5300
GST09	1750	2200	2500	2500	3500	6200	7900	9000	9500

	Max. axial force, Solid shaft								
	$F_{ax,max}$	$F_{ax,max}$	$F_{ax,max}$	$F_{ax,max}$	$F_{ax,max}$	$F_{ax,max}$	$F_{ax,max}$	$F_{ax,max}$	$F_{ax,max}$
	[N]	[N]	[N]	[N]	[N]	[N]	[N]	[N]	[N]
GST04	600	800	1000	1300	1400	1400	1400	1400	1400
GST05	800	1100	1400	2000	2000	2000	2000	2000	2000
GST06	900	1200	1500	2000	2500	2500	2500	2500	2500
GST07	1200	1600	2000	2700	3300	3700	3700	3700	3700
GST09	2500	3400	4300	5700	6800	7000	7000	7000	7000

6.4

► Application of force F_{rad}: centre of shaft journal (x = l/2)
► $F_{ax,max}$ only valid with F_{rad} = 0



Permissible radial and axial forces at output

GST□□-2 / 3 with standard bearings

Size	n_2 [r/min]									
Gearbox	1000	630	400	250	160	100	63	40	25	≤16

	Max. radial force, Solid shaft									
	$F_{rad,max}$	$F_{rad,max}$	$F_{rad,max}$	$F_{rad,max}$	$F_{rad,max}$	$F_{rad,max}$	$F_{rad,max}$	$F_{rad,max}$	$F_{rad,max}$	$F_{rad,max}$
	[N]	[N]	[N]	[N]	[N]	[N]	[N]	[N]	[N]	[N]
GST03	100	300	630	710	800	920	1100	1400	1500	1500
GST04	730	950	1250	1450	1700	2100	2500	2650	2650	2650
GST05	1150	1500	1950	2200	2600	3000	3500	3800	3900	3900
GST06	140	750	2350	2600	3100	3600	4300	4350	4350	4350
GST07	140	2050	3400	3800	4500	5400	6400	7600	9100	9500
GST09	1500	1950	6800	7600	9400	11500	11500	11500	11500	11500
GST11	11500	14400	17000	19000	21000	21000	21000	21000	21000	21000
GST14	16600	20700	24000	27000	31000	36000	39000	40000	40000	40000

	Max. axial force, Solid shaft									
	$F_{ax,max}$	$F_{ax,max}$	$F_{ax,max}$	$F_{ax,max}$	$F_{ax,max}$	$F_{ax,max}$	$F_{ax,max}$	$F_{ax,max}$	$F_{ax,max}$	$F_{ax,max}$
	[N]	[N]	[N]	[N]	[N]	[N]	[N]	[N]	[N]	[N]
GST03	300	400	600	700	800	900	1000	1000	1000	1000
GST04	600	800	1100	1300	1650	2000	2000	2000	2000	2000
GST05	1200	1600	2000	2300	2650	3100	3600	3600	3600	3600
GST06	500	600	850	900	1250	1800	2600	3600	4800	4800
GST07	1100	1500	1900	2200	2900	3900	5300	7000	7000	7000
GST09	1300	1800	2300	2800	4000	5600	8100	11000	12000	12000
GST11	5700	7600	9500	10000	11000	14000	16000	16000	16000	16000
GST14	9000	12000	15000	16000	18000	20000	20000	20000	20000	20000

- Application of force F_{rad}: centre of shaft journal (x = l/2)
- $F_{ax,max}$ only valid with F_{rad} = 0



Permissible radial and axial forces at output

GST□□-2 / 3 with reinforced bearing

Size	n_2 [r/min]									
Gearbox	1000	630	400	250	160	100	63	40	25	≤16

	Max. radial force, Solid shaft (reinforced bearings))									
	$F_{rad,max}$	$F_{rad,max}$	$F_{rad,max}$	$F_{rad,max}$	$F_{rad,max}$	$F_{rad,max}$	$F_{rad,max}$	$F_{rad,max}$	$F_{rad,max}$	$F_{rad,max}$
	[N]	[N]	[N]	[N]	[N]	[N]	[N]	[N]	[N]	[N]
GST04	1900	2350	2850	3150	3550	3750	3750	3750	3750	3750
GST05	3350	3950	4900	5400	5400	5400	5400	5400	5400	5400
GST06	4250	5100	6300	7000	7700	7700	7700	7700	7700	7700
GST07	5650	6850	8500	9500	10500	12500	13000	13000	13000	13000
GST09	11300	14000	16500	17000	17000	17000	17000	17000	17000	17000

	Max. axial force, Solid shaft (reinforced bearings))									
	$F_{ax,max}$	$F_{ax,max}$	$F_{ax,max}$	$F_{ax,max}$	$F_{ax,max}$	$F_{ax,max}$	$F_{ax,max}$	$F_{ax,max}$	$F_{ax,max}$	$F_{ax,max}$
	[N]	[N]	[N]	[N]	[N]	[N]	[N]	[N]	[N]	[N]
GST04	1000	1300	1700	1900	2200	2500	2500	2500	2500	2500
GST05	2100	2800	3600	3900	4300	4500	4500	4500	4500	4500
GST06	2100	2800	3500	3600	4200	4900	5700	5700	5700	5700
GST07	3300	4400	5500	6100	7100	8300	9000	9000	9000	9000
GST09	4800	6400	8000	9000	10500	12500	14000	14000	14000	14000

- Application of force F_{rad}: centre of shaft journal (x = l/2)
- $F_{ax,max}$ only valid with F_{rad} = 0



Output backlash in angular minutes

► Backlash ϕ depending on ratio i

GST04...09-1

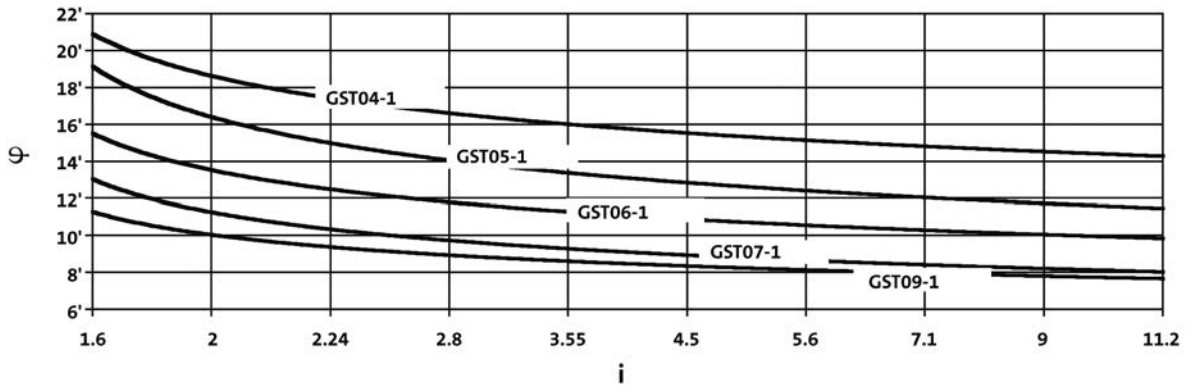

GST03-2

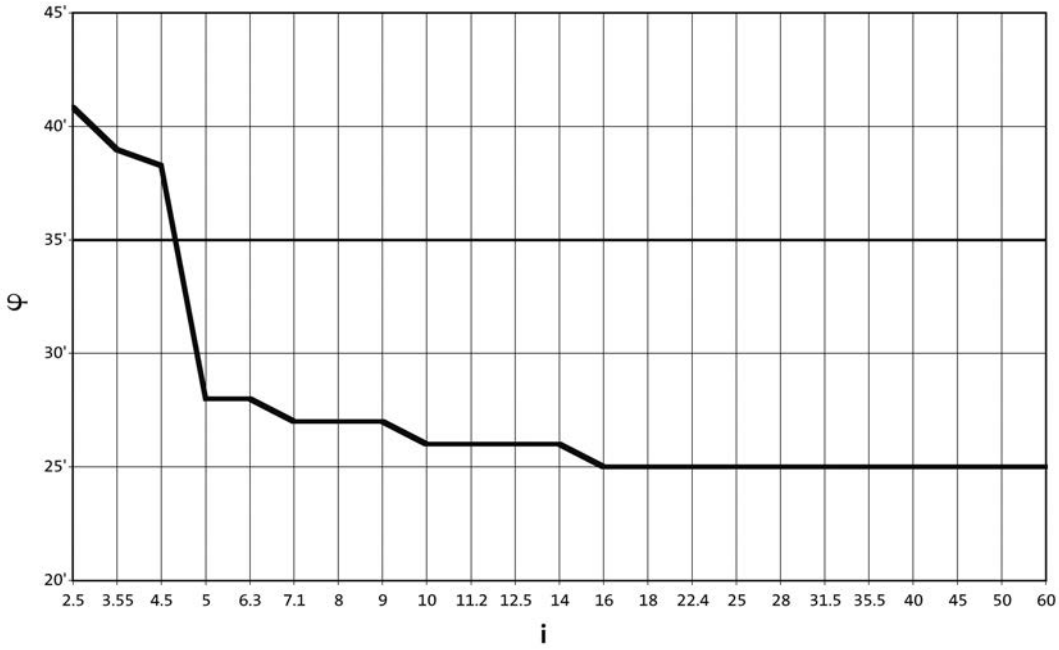

6.4



Output backlash in angular minutes

► Backlash ϕ depending on ratio i

GST04...14-2

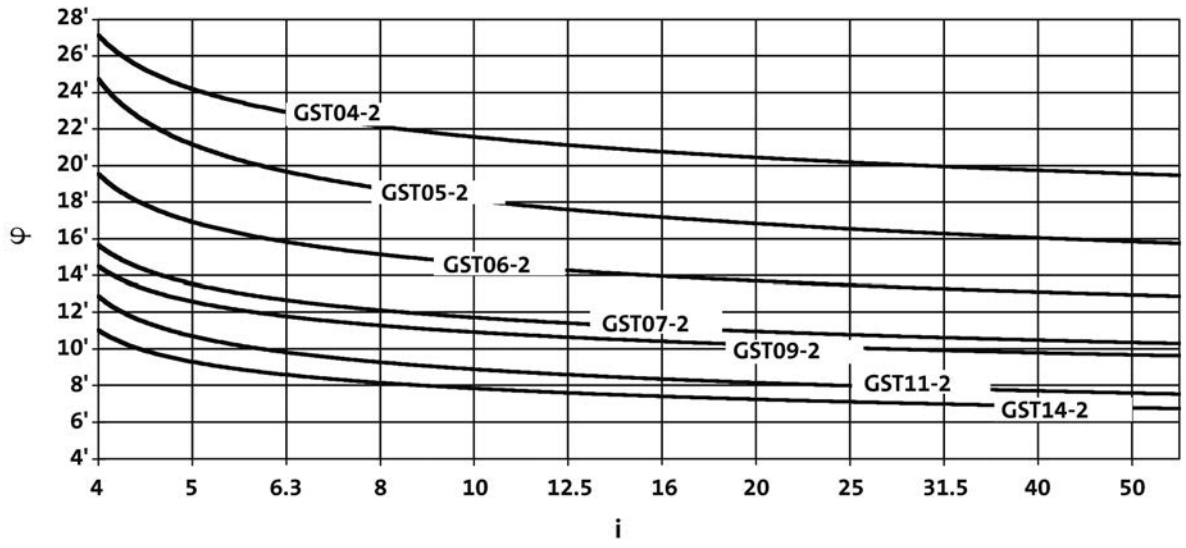

GST05...14-3

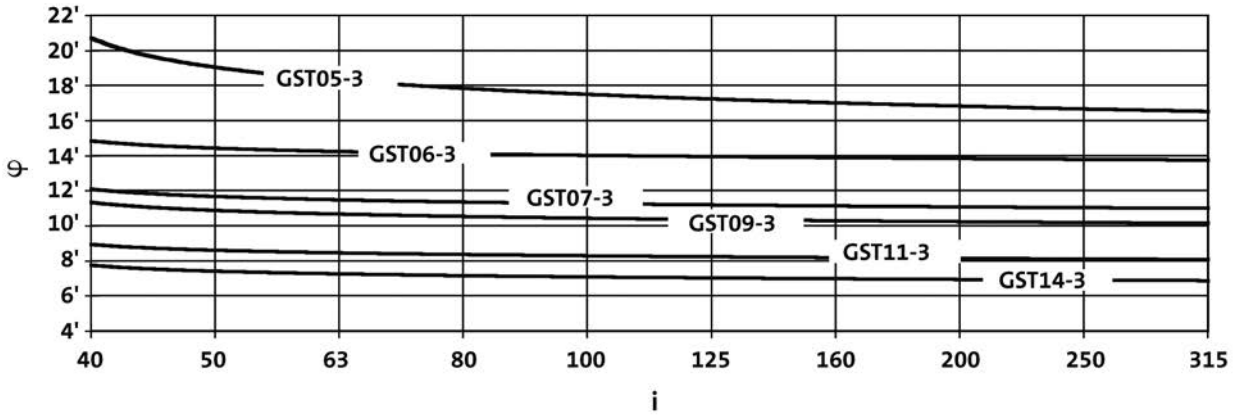

6.4



Moments of inertia

GST□□-1

► Moment of inertia (J) depending on ratio i

Gearbox			GST04
1.600	J	[kgcm²]	0.267
2.048	J	[kgcm²]	0.194
2.240	J	[kgcm²]	0.172
2.857	J	[kgcm²]	0.126
3.500	J	[kgcm²]	0.099
4.400	J	[kgcm²]	0.067
5.667	J	[kgcm²]	0.047
7.182	J	[kgcm²]	0.031
9.000	J	[kgcm²]	0.022
11.857	J	[kgcm²]	0.013

Gearbox			GST05
1.600	J	[kgcm²]	0.760
2.048	J	[kgcm²]	0.549
2.240	J	[kgcm²]	0.480
2.857	J	[kgcm²]	0.354
3.500	J	[kgcm²]	0.272
4.556	J	[kgcm²]	0.175
5.667	J	[kgcm²]	0.129
7.333	J	[kgcm²]	0.062
8.900	J	[kgcm²]	0.060
11.375	J	[kgcm²]	0.039

Gearbox			GST06
1.600	J	[kgcm²]	2.010
2.048	J	[kgcm²]	1.460
2.240	J	[kgcm²]	1.270
2.857	J	[kgcm²]	0.969
3.500	J	[kgcm²]	0.736
4.556	J	[kgcm²]	0.481
5.667	J	[kgcm²]	0.359
7.333	J	[kgcm²]	0.226
8.900	J	[kgcm²]	0.167
11.250	J	[kgcm²]	0.109

Gearbox			GST07
1.625	J	[kgcm²]	6.120
2.000	J	[kgcm²]	4.780
2.240	J	[kgcm²]	4.020
2.857	J	[kgcm²]	2.690
3.500	J	[kgcm²]	2.150
4.556	J	[kgcm²]	1.370
5.583	J	[kgcm²]	1.050
7.333	J	[kgcm²]	0.664
8.900	J	[kgcm²]	0.494
11.250	J	[kgcm²]	0.320

Gearbox			GST09
1.560	J	[kgcm²]	22.200
2.048	J	[kgcm²]	15.600
2.333	J	[kgcm²]	12.200
2.810	J	[kgcm²]	9.580
3.444	J	[kgcm²]	7.300
4.667	J	[kgcm²]	4.600
5.667	J	[kgcm²]	3.510
7.333	J	[kgcm²]	2.260
8.900	J	[kgcm²]	1.660
11.250	J	[kgcm²]	1.110

► The moments of inertia relate to the drive shaft of the gearbox.
► The total moment of inertia is calculated by adding the values of the gearbox, motor and accessories.



Moments of inertia

GST□□-2

► Moment of inertia (J) depending on ratio i

Gearbox			GST03
2.597	J	[kgcm²]	0.260
3.413	J	[kgcm²]	0.169
4.368	J	[kgcm²]	0.117
5.312	J	[kgcm²]	0.179
5.965	J	[kgcm²]	0.173
6.982	J	[kgcm²]	0.122
7.840	J	[kgcm²]	0.119
8.935	J	[kgcm²]	0.089
10.033	J	[kgcm²]	0.086
11.429	J	[kgcm²]	0.059
12.833	J	[kgcm²]	0.057
14.836	J	[kgcm²]	0.041
16.660	J	[kgcm²]	0.040
19.013	J	[kgcm²]	0.028
21.350	J	[kgcm²]	0.027
24.595	J	[kgcm²]	0.019
27.618	J	[kgcm²]	0.019
32.000	J	[kgcm²]	0.012
35.933	J	[kgcm²]	0.012
41.455	J	[kgcm²]	0.008
46.550	J	[kgcm²]	0.008
52.909	J	[kgcm²]	0.005
59.413	J	[kgcm²]	0.005

Gearbox			GST04
2.956	J	[kgcm²]	0.337
3.333	J	[kgcm²]	0.324
4.053	J	[kgcm²]	0.312
4.571	J	[kgcm²]	0.300
5.187	J	[kgcm²]	0.222
5.850	J	[kgcm²]	0.215
6.400	J	[kgcm²]	0.189
7.040	J	[kgcm²]	0.264
8.000	J	[kgcm²]	0.257
9.010	J	[kgcm²]	0.193
9.856	J	[kgcm²]	0.170
11.200	J	[kgcm²]	0.166
12.571	J	[kgcm²]	0.126
14.286	J	[kgcm²]	0.123
15.400	J	[kgcm²]	0.098
17.500	J	[kgcm²]	0.097
19.360	J	[kgcm²]	0.063
22.000	J	[kgcm²]	0.062
24.933	J	[kgcm²]	0.044
28.333	J	[kgcm²]	0.043
31.600	J	[kgcm²]	0.030
35.909	J	[kgcm²]	0.030
39.600	J	[kgcm²]	0.021
45.000	J	[kgcm²]	0.021
52.171	J	[kgcm²]	0.013
59.286	J	[kgcm²]	0.013

► The moments of inertia relate to the drive shaft of the gearbox.
► The total moment of inertia is calculated by adding the values of the gearbox, motor and accessories.



Moments of inertia

GST□□-2

► Moment of inertia (J) depending on ratio i

Gearbox			GST05
2.956	J	[kgcm²]	0.986
3.333	J	[kgcm²]	0.944
4.053	J	[kgcm²]	0.903
4.571	J	[kgcm²]	0.864
5.187	J	[kgcm²]	0.637
5.850	J	[kgcm²]	0.613
6.400	J	[kgcm²]	0.533
7.238	J	[kgcm²]	0.400
8.163	J	[kgcm²]	0.388
9.010	J	[kgcm²]	0.543
10.000	J	[kgcm²]	0.300
11.200	J	[kgcm²]	0.462
13.016	J	[kgcm²]	0.178
14.356	J	[kgcm²]	0.131
16.190	J	[kgcm²]	0.128
17.500	J	[kgcm²]	0.271
20.044	J	[kgcm²]	0.164
22.778	J	[kgcm²]	0.161
24.933	J	[kgcm²]	0.119
28.333	J	[kgcm²]	0.117
32.267	J	[kgcm²]	0.079
36.667	J	[kgcm²]	0.078
39.160	J	[kgcm²]	0.058
44.500	J	[kgcm²]	0.057
50.050	J	[kgcm²]	0.039
56.875	J	[kgcm²]	0.038

Gearbox			GST06
3.033	J	[kgcm²]	2.720
3.333	J	[kgcm²]	2.610
4.160	J	[kgcm²]	2.510
4.571	J	[kgcm²]	2.410
5.324	J	[kgcm²]	1.760
5.850	J	[kgcm²]	1.710
6.400	J	[kgcm²]	1.470
7.040	J	[kgcm²]	2.070
8.163	J	[kgcm²]	1.060
9.010	J	[kgcm²]	1.500
10.000	J	[kgcm²]	0.820
11.200	J	[kgcm²]	1.260
12.571	J	[kgcm²]	0.955
14.286	J	[kgcm²]	0.932
15.400	J	[kgcm²]	0.748
17.500	J	[kgcm²]	0.733
20.044	J	[kgcm²]	0.457
22.778	J	[kgcm²]	0.450
24.933	J	[kgcm²]	0.332
28.333	J	[kgcm²]	0.326
32.267	J	[kgcm²]	0.221
36.667	J	[kgcm²]	0.218
39.160	J	[kgcm²]	0.162
44.500	J	[kgcm²]	0.160
49.500	J	[kgcm²]	0.110
56.250	J	[kgcm²]	0.108

► The moments of inertia relate to the drive shaft of the gearbox.
► The total moment of inertia is calculated by adding the values of the gearbox, motor and accessories.



Moments of inertia

GST□□-2

► Moment of inertia (J) depending on ratio i

Gearbox			GST07
3.048	J	[kgcm²]	8.200
3.350	J	[kgcm²]	7.920
4.225	J	[kgcm²]	7.650
4.643	J	[kgcm²]	7.390
5.200	J	[kgcm²]	5.640
5.714	J	[kgcm²]	5.460
6.400	J	[kgcm²]	4.490
7.150	J	[kgcm²]	6.270
8.125	J	[kgcm²]	6.040
8.800	J	[kgcm²]	4.730
9.856	J	[kgcm²]	3.900
11.200	J	[kgcm²]	3.780
12.571	J	[kgcm²]	2.860
14.286	J	[kgcm²]	2.790
15.400	J	[kgcm²]	2.260
17.500	J	[kgcm²]	2.210
20.044	J	[kgcm²]	1.380
22.778	J	[kgcm²]	1.350
24.567	J	[kgcm²]	1.020
27.917	J	[kgcm²]	1.010
32.267	J	[kgcm²]	0.664
36.667	J	[kgcm²]	0.653
39.160	J	[kgcm²]	0.487
44.500	J	[kgcm²]	0.479
49.500	J	[kgcm²]	0.330
56.250	J	[kgcm²]	0.325

Gearbox			GST09
4.056	J	[kgcm²]	27.000
4.457	J	[kgcm²]	25.900
5.324	J	[kgcm²]	18.100
5.850	J	[kgcm²]	17.500
6.667	J	[kgcm²]	14.200
7.305	J	[kgcm²]	11.300
8.027	J	[kgcm²]	11.000
9.010	J	[kgcm²]	15.200
10.267	J	[kgcm²]	12.400
11.667	J	[kgcm²]	12.100
12.362	J	[kgcm²]	9.790
14.048	J	[kgcm²]	9.530
15.156	J	[kgcm²]	7.650
17.222	J	[kgcm²]	7.490
20.533	J	[kgcm²]	4.500
23.333	J	[kgcm²]	4.410
24.933	J	[kgcm²]	3.380
28.333	J	[kgcm²]	3.320
32.267	J	[kgcm²]	2.250
36.667	J	[kgcm²]	2.210
39.160	J	[kgcm²]	1.640
44.500	J	[kgcm²]	1.620
49.500	J	[kgcm²]	1.120
56.250	J	[kgcm²]	1.100

► The moments of inertia relate to the drive shaft of the gearbox.
► The total moment of inertia is calculated by adding the values of the gearbox, motor and accessories.



Moments of inertia

GST□□-2

► Moment of inertia (J) depending on ratio i

Gearbox			GST11
4.056	J	[kgcm²]	82.200
4.457	J	[kgcm²]	79.000
5.324	J	[kgcm²]	55.400
5.850	J	[kgcm²]	53.500
6.400	J	[kgcm²]	45.700
6.864	J	[kgcm²]	67.500
7.800	J	[kgcm²]	65.100
9.010	J	[kgcm²]	46.800
9.856	J	[kgcm²]	40.200
11.200	J	[kgcm²]	39.000
12.571	J	[kgcm²]	29.400
14.286	J	[kgcm²]	28.700
15.400	J	[kgcm²]	23.000
17.500	J	[kgcm²]	22.500
20.289	J	[kgcm²]	14.300
23.056	J	[kgcm²]	14.100
24.933	J	[kgcm²]	10.600
28.333	J	[kgcm²]	10.400
32.267	J	[kgcm²]	7.040
36.667	J	[kgcm²]	6.930
39.160	J	[kgcm²]	5.150
44.500	J	[kgcm²]	5.080
49.500	J	[kgcm²]	3.520
56.250	J	[kgcm²]	3.440

Gearbox			GST14
4.225	J	[kgcm²]	226.000
4.643	J	[kgcm²]	216.000
5.200	J	[kgcm²]	168.000
5.714	J	[kgcm²]	161.000
6.286	J	[kgcm²]	141.000
7.150	J	[kgcm²]	183.000
8.027	J	[kgcm²]	100.000
8.800	J	[kgcm²]	139.000
9.841	J	[kgcm²]	75.100
11.000	J	[kgcm²]	119.000
12.362	J	[kgcm²]	89.000
14.048	J	[kgcm²]	86.600
15.156	J	[kgcm²]	67.600
17.222	J	[kgcm²]	66.000
20.044	J	[kgcm²]	45.800
22.778	J	[kgcm²]	44.900
24.567	J	[kgcm²]	33.200
27.917	J	[kgcm²]	32.600
32.267	J	[kgcm²]	21.500
36.667	J	[kgcm²]	21.200
39.160	J	[kgcm²]	15.700
44.500	J	[kgcm²]	15.500
49.500	J	[kgcm²]	10.600
56.250	J	[kgcm²]	10.500

► The moments of inertia relate to the drive shaft of the gearbox.
► The total moment of inertia is calculated by adding the values of the gearbox, motor and accessories.



Moments of inertia

GST□□-3

► Moment of inertia (J) depending on ratio i

Gearbox			GST05
36.267	J	[kgcm²]	0.195
46.259	J	[kgcm²]	0.141
56.667	J	[kgcm²]	0.108
63.467	J	[kgcm²]	0.192
71.238	J	[kgcm²]	0.073
80.952	J	[kgcm²]	0.139
91.746	J	[kgcm²]	0.050
99.167	J	[kgcm²]	0.107
116.277	J	[kgcm²]	0.033
124.667	J	[kgcm²]	0.072
145.714	J	[kgcm²]	0.023
160.556	J	[kgcm²]	0.050
179.067	J	[kgcm²]	0.033
191.973	J	[kgcm²]	0.014
224.400	J	[kgcm²]	0.023
255.000	J	[kgcm²]	0.023
295.638	J	[kgcm²]	0.014
335.952	J	[kgcm²]	0.014

Gearbox			GST06
39.200	J	[kgcm²]	0.362
44.000	J	[kgcm²]	0.195
51.022	J	[kgcm²]	0.320
53.900	J	[kgcm²]	0.178
67.760	J	[kgcm²]	0.114
70.156	J	[kgcm²]	0.160
80.952	J	[kgcm²]	0.203
87.267	J	[kgcm²]	0.150
99.167	J	[kgcm²]	0.150
109.707	J	[kgcm²]	0.096
124.667	J	[kgcm²]	0.096
141.289	J	[kgcm²]	0.063
160.556	J	[kgcm²]	0.063
179.067	J	[kgcm²]	0.043
203.485	J	[kgcm²]	0.042
231.733	J	[kgcm²]	0.040
255.000	J	[kgcm²]	0.029
290.400	J	[kgcm²]	0.027
330.000	J	[kgcm²]	0.027
382.590	J	[kgcm²]	0.026
434.762	J	[kgcm²]	0.025

Gearbox			GST07
39.200	J	[kgcm²]	0.974
44.000	J	[kgcm²]	0.534
51.022	J	[kgcm²]	0.843
53.900	J	[kgcm²]	0.484
65.079	J	[kgcm²]	0.313
70.156	J	[kgcm²]	0.431
79.762	J	[kgcm²]	0.536
85.983	J	[kgcm²]	0.400
97.708	J	[kgcm²]	0.399
111.915	J	[kgcm²]	0.238
127.176	J	[kgcm²]	0.237
139.211	J	[kgcm²]	0.166
158.194	J	[kgcm²]	0.166
180.156	J	[kgcm²]	0.108
204.722	J	[kgcm²]	0.107
236.622	J	[kgcm²]	0.101
248.458	J	[kgcm²]	0.077
268.889	J	[kgcm²]	0.101
326.333	J	[kgcm²]	0.073
367.033	J	[kgcm²]	0.094
417.083	J	[kgcm²]	0.067

Gearbox			GST09
40.136	J	[kgcm²]	2.140
43.267	J	[kgcm²]	1.550
49.167	J	[kgcm²]	1.530
53.044	J	[kgcm²]	1.380
60.278	J	[kgcm²]	1.370
71.867	J	[kgcm²]	1.170
81.667	J	[kgcm²]	1.160
93.541	J	[kgcm²]	0.706
99.167	J	[kgcm²]	1.070
113.585	J	[kgcm²]	0.652
129.074	J	[kgcm²]	0.649
141.289	J	[kgcm²]	0.458
160.556	J	[kgcm²]	0.456
182.844	J	[kgcm²]	0.297
207.778	J	[kgcm²]	0.295
236.622	J	[kgcm²]	0.275
252.167	J	[kgcm²]	0.212
268.889	J	[kgcm²]	0.275
326.333	J	[kgcm²]	0.198
363.000	J	[kgcm²]	0.255
412.500	J	[kgcm²]	0.183

► The moments of inertia relate to the drive shaft of the gearbox.
► The total moment of inertia is calculated by adding the values of the gearbox, motor and accessories.



Moments of inertia

GST□□-3

► Moment of inertia (J) depending on ratio i

Gearbox			GST11
40.816	J	[kgcm²]	6.360
44.000	J	[kgcm²]	5.660
50.000	J	[kgcm²]	5.600
57.968	J	[kgcm²]	4.770
61.250	J	[kgcm²]	4.080
71.011	J	[kgcm²]	3.520
80.694	J	[kgcm²]	3.500
87.267	J	[kgcm²]	3.220
99.167	J	[kgcm²]	3.200
112.933	J	[kgcm²]	2.930
129.074	J	[kgcm²]	1.940
146.993	J	[kgcm²]	1.770
158.194	J	[kgcm²]	1.400
180.156	J	[kgcm²]	1.290
207.778	J	[kgcm²]	0.880
236.622	J	[kgcm²]	0.818
252.167	J	[kgcm²]	0.633
268.889	J	[kgcm²]	0.816
326.333	J	[kgcm²]	0.589
363.000	J	[kgcm²]	0.756
412.500	J	[kgcm²]	0.545

Gearbox			GST14
40.185	J	[kgcm²]	24.400
42.580	J	[kgcm²]	18.300
48.386	J	[kgcm²]	18.100
53.148	J	[kgcm²]	20.500
59.321	J	[kgcm²]	13.200
69.042	J	[kgcm²]	11.500
78.457	J	[kgcm²]	11.400
93.541	J	[kgcm²]	6.570
96.157	J	[kgcm²]	10.400
106.296	J	[kgcm²]	6.520
130.278	J	[kgcm²]	6.000
139.211	J	[kgcm²]	4.420
158.194	J	[kgcm²]	4.400
171.111	J	[kgcm²]	5.490
204.722	J	[kgcm²]	2.860
236.622	J	[kgcm²]	2.650
248.458	J	[kgcm²]	2.060
268.889	J	[kgcm²]	2.650
326.333	J	[kgcm²]	1.920
363.000	J	[kgcm²]	2.450
412.500	J	[kgcm²]	1.780

► The moments of inertia relate to the drive shaft of the gearbox.
► The total moment of inertia is calculated by adding the values of the gearbox, motor and accessories.



Weights

GST□□-1M VBR

			063C11 063C12 063C31 063C32	063C42	071C11	071C13 071C31	071C32	071C33	071C42	080C13 080C32 080C33	090C12	090C32
GST04	m	[kg]	8		10	11	10	11	10	16	21	23
GST05	m	[kg]		12			14			19	25	27
GST06	m	[kg]		16		19	18	19	18	23	29	31
GST07	m	[kg]								33	39	41
GST09	m	[kg]									53	55

			100C12	100C32	112C22	132C12	132C22	160C22	160C32	180C12	180C32	180C42
GST05	m	[kg]	33	35								
GST06	m	[kg]	37	40	53							
GST07	m	[kg]	47	49	62	85	92	135				
GST09	m	[kg]	61	64	76	100	107	150	165	216	221	241

GST□□-1M VCR

			063C11 063C12 063C31 063C32	063C42	071C11	071C13 071C31	071C32	071C33 071C42	080C13 080C32 080C33	090C12	090C32	100C12
GST04	m	[kg]	7	8	9	10	9	10	15	20	22	
GST05	m	[kg]		11		13			18	24	26	32
GST06	m	[kg]		15		17	16	17	21	28	30	36
GST07	m	[kg]							29	36	38	44
GST09	m	[kg]								49	51	57

			100C32	112C22	132C12	132C22	160C22	160C32	180C12	180C32	180C42
GST05	m	[kg]	34								
GST06	m	[kg]	38	51							
GST07	m	[kg]	46	59	82	89	132				
GST09	m	[kg]	59	72	95	102	145	160	211	216	236

► Weights with oil filling for mounting position A; all values are approximate.
The weights relate to the basic version. Bear in mind that additional weights may be needed, e.g. for motor options.



Weights

GST□□-1M VCK

			063C11 063C12 063C31 063C32	063C42	071C11	071C13 071C31	071C32	071C33 071C42	080C13 080C32 080C33	090C12	090C32	100C12
GST04	m	[kg]	8	9	10	11	10	11	16	21	23	
GST05	m	[kg]		13	14	15	14	15	19	25	27	33
GST06	m	[kg]		18		20	19	20	24	31	33	39
GST07	m	[kg]							33	40	42	48
GST09	m	[kg]								56	58	64

			100C32	112C22	132C12	132C22	160C22	160C32	180C12	180C32	180C42
GST05	m	[kg]	36								
GST06	m	[kg]	41	54							
GST07	m	[kg]	50	63	86	93	136				
GST09	m	[kg]	66	79	102	109	152	167	218	223	243

► Weights with oil filling for mounting position A; all values are approximate.
The weights relate to the basic version. Bear in mind that additional weights may be needed, e.g. for motor options.



Weights

GST□□-2M VAR / VBR

			063C02	063C11	063C12	063C22	063C31	063C32	063C42	071C11	071C13 071C31
GST03	m	[kg]	6		6			6			
GST04	m	[kg]		10				10		12	13
GST05	m	[kg]							16	17	18
GST06	m	[kg]							23		25

			071C32	071C33	071C42	080C13 080C32 080C33	090C12	090C32	100C12	100C32	112C22
GST03	m	[kg]	7		8						
GST04	m	[kg]	12	13	12	18	23	25			
GST05	m	[kg]	17	18		22	28	30	36	39	
GST06	m	[kg]	24	25		29	36	38	44	46	59
GST07	m	[kg]				45	51	53	59	61	74
GST09	m	[kg]					78	80	86	88	101
GST11	m	[kg]							132	134	146
GST14	m	[kg]									238

			132C12	132C22	160C22	160C32	180C12	180C32	180C42	225C12	225C22
GST06	m	[kg]	81	88							
GST07	m	[kg]	97	104	147	162					
GST09	m	[kg]	124	131	174	189	240	245	265		
GST11	m	[kg]	169	176	219	234	285	290	310	509	529
GST14	m	[kg]	258	265	308	323	374	379	399	597	617

GST□□-2M VCR

			063C02	063C11	063C12	063C22	063C31	063C32	063C42	071C11	071C13 071C31
GST03	m	[kg]	5		6	5		6			
GST04	m	[kg]		9			9		10	11	12
GST05	m	[kg]							14	16	
GST06	m	[kg]							20		22

			071C32	071C33	071C42	080C13 080C32 080C33	090C12	090C32	100C12	100C32	112C22
GST03	m	[kg]	7		8						
GST04	m	[kg]	11	12		17	22	24			
GST05	m	[kg]		16		21	27	29	35	37	
GST06	m	[kg]		22		27	33	35	41	44	57
GST07	m	[kg]				40	46	48	54	57	70
GST09	m	[kg]					69	71	77	80	92
GST11	m	[kg]							117	120	131
GST14	m	[kg]									210

			132C12	132C22	160C22	160C32	180C12	180C32	180C42	225C12	225C22
GST06	m	[kg]	79	86							
GST07	m	[kg]	93	100	143	158					
GST09	m	[kg]	116	123	166	181	232	237	257		
GST11	m	[kg]	154	161	204	219	270	275	295	494	514
GST14	m	[kg]	230	237	280	295	346	351	371	569	589

► Weights with oil filling for mounting position A; all values are approximate.
The weights relate to the basic version. Bear in mind that additional weights may be needed, e.g. for motor options.



Weights

GST□□-2M VCK

			063C02	063C11	063C12	063C22	063C31	063C32	063C42	071C11	071C13 071C31
GST03	m	[kg]	6		6			6	7		
GST04	m	[kg]		10			10		11	12	13
GST05	m	[kg]							16	17	18
GST06	m	[kg]							23		25

			071C32	071C33	071C42	080C13 080C32 080C33	090C12	090C32	100C12	100C32	112C22
GST03	m	[kg]	8		9						
GST04	m	[kg]	12	13		18	23	25			
GST05	m	[kg]	17	18		22	28	30	36	39	
GST06	m	[kg]		25		30	36	38	44	47	60
GST07	m	[kg]				44	50	52	58	61	74
GST09	m	[kg]					76	78	84	87	99
GST11	m	[kg]							128	130	142
GST14	m	[kg]									226

			132C12	132C22	160C22	160C32	180C12	180C32	180C42	225C12	225C22
GST06	m	[kg]	82	89							
GST07	m	[kg]	97	104	147	162					
GST09	m	[kg]	123	130	173	188	239	244	264		
GST11	m	[kg]	164	171	214	229	280	285	305	505	525
GST14	m	[kg]	246	253	296	311	362	367	387	584	604

GST□□-2M VAL

			063C11 063C31	071C11	071C13 071C31 071C33	080C13 080C32 080C33	090C12	090C32	100C12	100C32	112C22
GST04	m	[kg]	11	13	14	19	24	26			
GST05	m	[kg]		19		24	30	32	38	40	
GST06	m	[kg]			28	32	39	41	47	49	62
GST07	m	[kg]				49	55	57	63	65	78
GST09	m	[kg]					85	87	93	95	108
GST11	m	[kg]							142	145	157
GST14	m	[kg]									254

			132C12	132C22	160C22	160C32	180C12	180C32	180C42	225C12	225C22
GST06	m	[kg]	84	91							
GST07	m	[kg]	101	108	151	166					
GST09	m	[kg]	131	138	181	196	247	252	272		
GST11	m	[kg]	179	186	229	244	295	300	320	520	540
GST14	m	[kg]	274	281	324	339	390	395	415	612	632

► Weights with oil filling for mounting position A; all values are approximate.
The weights relate to the basic version. Bear in mind that additional weights may be needed, e.g. for motor options.



Weights

GST□□-3M VAR / VBR

			063C11 063C12 063C31 063C32	063C42	071C11	071C13 071C31	071C32	071C33 071C42	080C13	080C32 080C33	090C12	090C32
GST05	m	[kg]	16		18	19	18	19	24			
GST06	m	[kg]	26		28	29	28	29	34		39	41
GST07	m	[kg]		46	48		47	48	53		59	61
GST09	m	[kg]		78	80		79	80	85		91	93
GST11	m	[kg]							139		145	147
GST14	m	[kg]									251	253

			100C12	100C32	112C22	132C12	132C22	160C22	160C32	180C12	180C32
GST07	m	[kg]	67	69							
GST09	m	[kg]	99	101	114						
GST11	m	[kg]	153	156	169	191	198				
GST14	m	[kg]	259	262	274	298	305	348	363	414	419

GST□□-3M VCR

			063C11	063C12	063C31	063C32	063C42	071C11	071C13 071C31	071C32	071C33	071C42	080C13	080C32 080C33
GST05	m	[kg]	14	15	14	15		17		16	17		22	
GST06	m	[kg]	23				24	25	26	25	26		31	
GST07	m	[kg]					41	43	44	43	44		48	
GST09	m	[kg]					69	71	72	71	72	71	76	
GST11	m	[kg]											124	

			090C12	090C32	100C12	100C32	112C22	132C12	132C22	160C22	160C32	180C12	180C32
GST06	m	[kg]	36	38									
GST07	m	[kg]	54	56	62	65							
GST09	m	[kg]	82	84	90	93	106						
GST11	m	[kg]	130	132	138	141	154	176	183				
GST14	m	[kg]	223	225	231	234	246	270	277	320	335	386	391

► Weights with oil filling for mounting position A; all values are approximate.
The weights relate to the basic version. Bear in mind that additional weights may be needed, e.g. for motor options.



Weights

GST□□-3M VCK

			063C11 063C12 063C31 063C32	063C42	071C11	071C13 071C31	071C32	071C33	071C42	080C13	080C32 080C33	090C12
GST05	m	[kg]	16		18	19	18	19		24		
GST06	m	[kg]	26	27	28	29	28	29		34		39
GST07	m	[kg]		45	47	48	47	48		52		58
GST09	m	[kg]		76	78	79	78	79	78	83		89
GST11	m	[kg]								135		141
GST14	m	[kg]										239

			090C32	100C12	100C32	112C22	132C12	132C22	160C22	160C32	180C12	180C32
GST06	m	[kg]	41									
GST07	m	[kg]	60	66	69							
GST09	m	[kg]	91	97	100	113						
GST11	m	[kg]	143	149	151	164	187	194				
GST14	m	[kg]	241	247	249	262	285	292	335	350	401	406

GST□□-3M VAL

			063C11	063C12	063C31	063C32	063C42	071C11	071C13 071C31	071C32	071C33 071C42	080C13	080C32 080C33
GST05	m	[kg]	17	18	17	18		20		19	20	25	
GST06	m	[kg]			29			31	32	31	32	37	
GST07	m	[kg]					50	52		51	52	57	
GST09	m	[kg]					85	87		86	87	92	
GST11	m	[kg]										150	

			090C12	090C32	100C12	100C32	112C22	132C12	132C22	160C22	160C32	180C12	180C32
GST06	m	[kg]	42	44									
GST07	m	[kg]	63	65	71	73							
GST09	m	[kg]	98	100	106	108	121						
GST11	m	[kg]	156	158	164	166	179	202	209				
GST14	m	[kg]	267	269	275	277	290	313	320	363	378	429	434

► Weights with oil filling for mounting position A; all values are approximate.
The weights relate to the basic version. Bear in mind that additional weights may be needed, e.g. for motor options.



Selection tables

50 Hz, 60 Hz: P_N = 0.06 kW

n_N	1425 r/min				1735 r/min			i		
f_N	50 Hz				60 Hz					
	n_2 [r/min]	M_2 [Nm]	c		n_2 [r/min]	M_2 [Nm]	c			
	75	7.4	5.6					19.013	GST03-2M□□□063C02	124
	67	8.3	5.3					21.350	GST03-2M□□□063C02	124
	58	9.6	4.7		70	7.9	5.7	24.595	GST03-2M□□□063C02	124
	52	11	4.2		63	8.8	5.1	27.618	GST03-2M□□□063C02	124
	45	12	3.6		54	10	4.4	32.000	GST03-2M□□□063C02	124
	40	14	3.2		48	12	3.9	35.933	GST03-2M□□□063C02	124
	34	16	2.8		42	13	3.4	41.455	GST03-2M□□□063C02	124
	31	18	2.5		37	15	3.0	46.550	GST03-2M□□□063C02	124
	27	21	2.2		33	17	2.7	52.909	GST03-2M□□□063C02	124
	24	23	1.9		29	19	2.4	59.413	GST03-2M□□□063C02	124



Selection tables

50 Hz, 60 Hz: P_N = 0.09 kW

n_N	1375 r/min				1695 r/min			i		
f_N	50 Hz				60 Hz					
	n_2 [r/min]	M_2 [Nm]	c		n_2 [r/min]	M_2 [Nm]	c			
	137	6.1	5.7					10.033	GST03-2M□□□063C22	124
	120	6.9	5.1					11.429	GST03-2M□□□063C22	124
	107	7.8	4.8		131	6.3	5.7	12.833	GST03-2M□□□063C22	124
	93	9.0	4.3		113	7.3	5.1	14.836	GST03-2M□□□063C22	124
	83	10	4.1		101	8.2	5.0	16.660	GST03-2M□□□063C22	124
	72	12	3.6		88	9.4	4.5	19.013	GST03-2M□□□063C22	124
	64	13	3.4		79	11	4.2	21.350	GST03-2M□□□063C22	124
	56	15	3.0		68	12	3.7	24.595	GST03-2M□□□063C22	124
	50	17	2.7		61	14	3.3	27.618	GST03-2M□□□063C22	124
	43	19	2.3		52	16	2.9	32.000	GST03-2M□□□063C22	124
	38	22	2.1		47	18	2.5	35.933	GST03-2M□□□063C22	124
	33	25	1.8		40	20	2.2	41.455	GST03-2M□□□063C22	124
	30	28	1.6		36	23	2.0	46.550	GST03-2M□□□063C22	124
	26	32	1.4		32	26	1.7	52.909	GST03-2M□□□063C22	124
	23	36	1.2		28	29	1.5	59.413	GST03-2M□□□063C22	124



Selection tables

50 Hz, 60 Hz: P_N = 0.12 kW

n_N	1425 r/min				1735 r/min			i		
f_N	50 Hz				60 Hz					
	n_2 [r/min]	M_2 [Nm]	c		n_2 [r/min]	M_2 [Nm]	c			
	636	1.8	5.4		770	1.5	6.2	2.240	GST04-1M □□□063C12	112
	499	2.3	5.0		604	1.9	5.8	2.857	GST04-1M □□□063C12	112
	324	3.5	5.5		392	2.9	6.4	4.400	GST04-1M □□□063C12	112
	252	4.5	4.6		304	3.7	5.3	5.667	GST04-1M □□□063C12	112
	223	5.0	5.4		270	4.1	6.2	6.400	GST04-2M □□□063C12	124
	204	5.4	5.4		247	4.5	6.3	6.982	GST03-2M □□□063C12	124
	198	5.7	4.0		240	4.7	4.7	7.182	GST04-1M □□□063C12	112
	182	6.1	5.2		220	5.0	6.0	7.840	GST03-2M □□□063C12	124
	160	7.0	4.7		193	5.7	5.4	8.935	GST03-2M □□□063C12	124
	158	7.1	3.3		192	5.9	3.8	9.000	GST04-1M □□□063C12	112
	145	7.7	5.4		175	6.3	6.2	9.856	GST04-2M □□□063C12	124
	142	7.8	4.4		172	6.4	5.1	10.033	GST03-2M □□□063C12	124
	125	8.9	4.0		151	7.3	4.6	11.429	GST03-2M □□□063C12	124
	120	9.4	1.7		146	7.7	2.0	11.857	GST04-1M □□□063C12	112
	113	9.8	5.0		137	8.1	5.8	12.571	GST04-2M □□□063C12	124
	111	10	3.8		134	8.2	4.4	12.833	GST03-2M □□□063C12	124
	100	11	5.0		121	9.2	5.8	14.286	GST04-2M □□□063C12	124
	96	12	3.4		116	9.5	3.9	14.836	GST03-2M □□□063C12	124
	86	13	3.2		104	11	3.8	16.660	GST03-2M □□□063C12	124
	75	15	2.8		91	12	3.4	19.013	GST03-2M □□□063C12	124
	74	15	4.7		89	12	5.7	19.360	GST04-2M □□□063C12	124
	67	17	2.7		81	14	3.2	21.350	GST03-2M □□□063C12	124
	65	17	3.6		78	14	4.4	22.000	GST04-2M □□□063C12	124
	58	19	2.3		70	16	2.9	24.595	GST03-2M □□□063C12	124
	57	19	3.7		69	16	4.5	24.933	GST04-2M □□□063C12	124
	52	22	2.1		63	18	2.5	27.618	GST03-2M □□□063C12	124
	50	22	2.9		61	18	3.5	28.333	GST04-2M □□□063C12	124
	45	25	2.9		55	20	3.6	31.600	GST04-2M □□□063C12	124
	45	25	1.8		54	21	2.2	32.000	GST03-2M □□□063C12	124
	40	28	2.3		48	23	2.8	35.909	GST04-2M □□□063C12	124
	40	28	1.6		48	23	2.0	35.933	GST03-2M □□□063C12	124
	36	31	2.4		44	25	2.9	39.600	GST04-2M □□□063C12	124
	34	32	1.4		42	27	1.7	41.455	GST03-2M □□□063C12	124
	32	35	1.9		38	29	2.3	45.000	GST04-2M □□□063C12	124
	31	36	1.2		37	30	1.5	46.550	GST03-2M □□□063C12	124
	27	41	1.7		33	33	2.1	52.171	GST04-2M □□□063C12	124
	27	41	1.1		33	34	1.3	52.909	GST03-2M □□□063C12	124
	24	46	1.4		29	38	1.7	59.286	GST04-2M □□□063C12	124
	24	46	1.0		29	38	1.2	59.413	GST03-2M □□□063C12	124
	23	49	3.0		27	40	3.6	63.467	GST05-3M □□□063C12	136



Selection tables

50 Hz, 60 Hz: P_N = 0.12 kW

n_N	1425 r/min				1735 r/min			i		
f_N	50 Hz				60 Hz					
	n_2 [r/min]	M_2 [Nm]	c		n_2 [r/min]	M_2 [Nm]	c			
	20	55	3.1		24	45	3.7	71.238	GST05-3M □□□063C12	136
	18	62	2.4		21	51	2.9	80.952	GST05-3M □□□063C12	136
	16	71	2.4		19	58	2.9	91.746	GST05-3M □□□063C12	136
	12	89	1.9		15	73	2.3	116.277	GST05-3M □□□063C12	136
	11	96	1.6		14	79	1.9	124.667	GST05-3M □□□063C12	136
	9.8	112	1.5		12	92	1.9	145.714	GST05-3M □□□063C12	136
	8.9	123	1.2		11	101	1.5	160.556	GST05-3M □□□063C12	136
	8.9	123	2.8		11	101	3.4	160.556	GST06-3M □□□063C12	136
	8.0	138	1.2		9.6	113	1.5	179.067	GST05-3M □□□063C12	136
	8.0	138	2.7		9.6	113	3.3	179.067	GST06-3M □□□063C12	136
	7.4	148	1.2		9.0	121	1.4	191.973	GST05-3M □□□063C12	136
	7.0	156	2.2		8.5	128	2.7	203.485	GST06-3M □□□063C12	136
	6.4	172	1.0		7.7	142	1.2	224.400	GST05-3M □□□063C12	136
	6.2	178	2.1		7.4	146	2.6	231.733	GST06-3M □□□063C12	136
	5.6	196	1.8		6.8	161	2.2	255.000	GST06-3M □□□063C12	136
					6.8	161	0.9	255.000	GST05-3M □□□063C12	136
	4.9	223	1.7		5.9	183	2.0	290.400	GST06-3M □□□063C12	136
					5.9	187	0.9	295.638	GST05-3M □□□063C12	136
	4.3	254	1.4		5.2	208	1.7	330.000	GST06-3M □□□063C12	136
	3.7	294	1.3		4.5	241	1.6	382.590	GST06-3M □□□063C12	136
	3.3	334	1.1		4.0	274	1.3	434.762	GST06-3M □□□063C12	136



Selection tables

50 Hz, 60 Hz: P_N = 0.18 kW

n_N	2740 r/min				3370 r/min			i		
f_N	50 Hz				60 Hz					
	n_2 [r/min]	M_2 [Nm]	c		n_2 [r/min]	M_2 [Nm]	c			
	1223	1.4	5.6		1491	1.1	6.5	2.240	GST04-1M □□□063C11	112
	959	1.8	5.2		1169	1.4	6.0	2.857	GST04-1M □□□063C11	112
	623	2.7	5.8		759	2.2	6.6	4.400	GST04-1M □□□063C11	112
	484	3.5	4.8		589	2.8	5.5	5.667	GST04-1M □□□063C11	112
	428	3.9	5.6		522	3.2	6.5	6.400	GST04-2M □□□063C11	124
	382	4.4	4.2		465	3.6	4.8	7.182	GST04-1M □□□063C11	112
	304	5.6	3.4		371	4.5	3.9	9.000	GST04-1M □□□063C11	112
	278	6.0	5.6		339	4.9	6.5	9.856	GST04-2M □□□063C11	124
	231	7.3	1.8		282	6.0	2.1	11.857	GST04-1M □□□063C11	112
	218	7.7	5.2		266	6.2	6.0	12.571	GST04-2M □□□063C11	124
	192	8.7	5.2		234	7.1	6.0	14.286	GST04-2M □□□063C11	124
	142	12	5.5		173	9.6	6.4	19.360	GST04-2M □□□063C11	124
	125	13	4.3		152	11	5.0	22.000	GST04-2M □□□063C11	124
	110	15	4.4		134	12	5.0	24.933	GST04-2M □□□063C11	124
	97	17	3.4		118	14	3.9	28.333	GST04-2M □□□063C11	124
	87	19	3.5		106	16	4.0	31.600	GST04-2M □□□063C11	124
	76	22	2.7		93	18	3.1	35.909	GST04-2M □□□063C11	124
	69	24	2.8		84	20	3.2	39.600	GST04-2M □□□063C11	124
	61	27	2.4		74	22	2.8	45.000	GST04-2M □□□063C11	124
	53	32	2.2		64	26	2.6	52.171	GST04-2M □□□063C11	124
	46	36	1.8		56	29	2.2	59.286	GST04-2M □□□063C11	124
	43	38	3.8		53	31	4.5	63.467	GST05-3M □□□063C11	136
	39	43	3.9		47	35	4.6	71.238	GST05-3M □□□063C11	136
	34	49	3.0		41	39	3.6	80.952	GST05-3M □□□063C11	136
	30	55	3.1		36	45	3.7	91.746	GST05-3M □□□063C11	136
	24	70	2.4		29	57	2.9	116.277	GST05-3M □□□063C11	136
	22	75	2.0		27	61	2.4	124.667	GST05-3M □□□063C11	136
	19	87	2.0		23	71	2.3	145.714	GST05-3M □□□063C11	136
	17	96	1.6		21	78	1.8	160.556	GST05-3M □□□063C11	136
	15	107	1.6		19	87	1.8	179.067	GST05-3M □□□063C11	136
	14	115	1.5		17	94	1.8	191.973	GST05-3M □□□063C11	136
	14	122	2.8		16	99	3.4	203.485	GST06-3M □□□063C11	136
	12	135	1.3		15	109	1.5	224.400	GST05-3M □□□063C11	136
	12	139	2.7		14	113	3.2	231.733	GST06-3M □□□063C11	136
	11	153	1.0		13	124	1.2	255.000	GST05-3M □□□063C11	136
	11	153	2.3		13	124	2.7	255.000	GST06-3M □□□063C11	136
	9.4	174	2.2		12	142	2.5	290.400	GST06-3M □□□063C11	136
	9.3	177	1.0		11	144	1.1	295.638	GST05-3M □□□063C11	136
	8.3	198	1.8		10	161	2.1	330.000	GST06-3M □□□063C11	136
	7.2	229	1.6		8.7	186	1.9	382.590	GST06-3M □□□063C11	136



Selection tables

50 Hz, 60 Hz: P_N = 0.18 kW

n_N	2740 r/min				3370 r/min			i		
f_N	50 Hz				60 Hz					
	n_2 [r/min]	M_2 [Nm]	c		n_2 [r/min]	M_2 [Nm]	c			
	6.3	261	1.4		7.7	212	1.6	434.762	GST06-3M □□□063C11	136



Selection tables

50 Hz, 60 Hz: P_N = 0.18 kW

n_N	1365 r/min				1695 r/min			i		
f_N	50 Hz				60 Hz					
	n_2 [r/min]	M_2 [Nm]	c		n_2 [r/min]	M_2 [Nm]	c			
	609	2.8	3.4		743	2.2	4.1	2.240	GST04-1M □□□063C32	112
	526	3.2	5.7		641	2.6	6.8	2.597	GST03-2M □□□063C32	124
	478	3.5	3.2		583	2.9	3.8	2.857	GST04-1M □□□063C32	112
	400	4.2	4.6		488	3.4	5.5	3.413	GST03-2M □□□063C32	124
	313	5.3	3.9		381	4.3	4.7	4.368	GST03-2M □□□063C32	124
	310	5.5	3.5		378	4.4	4.2	4.400	GST04-1M □□□063C32	112
	257	6.5	4.1		313	5.2	4.9	5.312	GST03-2M □□□063C32	124
	241	7.0	2.9		294	5.7	3.5	5.667	GST04-1M □□□063C32	112
	229	7.3	3.9		279	5.9	4.7	5.965	GST03-2M □□□063C32	124
	213	7.8	3.4		260	6.3	4.1	6.400	GST04-2M □□□063C32	124
	196	8.5	3.5		239	6.9	4.1	6.982	GST03-2M □□□063C32	124
	190	8.9	2.6		232	7.2	3.1	7.182	GST04-1M □□□063C32	112
	174	9.6	3.3		212	7.7	3.9	7.840	GST03-2M □□□063C32	124
	153	11	3.0		186	8.8	3.6	8.935	GST03-2M □□□063C32	124
	152	11	2.1		185	9.0	2.5	9.000	GST04-1M □□□063C32	112
	139	12	3.4		169	9.7	4.1	9.856	GST04-2M □□□063C32	124
	136	12	2.8		166	9.9	3.4	10.033	GST03-2M □□□063C32	124
	119	14	2.5		146	11	3.0	11.429	GST03-2M □□□063C32	124
	115	15	1.1		140	12	1.3	11.857	GST04-1M □□□063C32	112
	109	15	3.2		132	12	3.8	12.571	GST04-2M □□□063C32	124
	106	16	2.4		130	13	2.9	12.833	GST03-2M □□□063C32	124
	96	17	3.2		117	14	3.8	14.286	GST04-2M □□□063C32	124
	92	18	2.2		112	15	2.6	14.836	GST03-2M □□□063C32	124
	82	20	2.0		100	16	2.5	16.660	GST03-2M □□□063C32	124
	72	23	1.8		88	19	2.2	19.013	GST03-2M □□□063C32	124
	71	24	3.0		86	19	3.7	19.360	GST04-2M □□□063C32	124
	64	26	1.7		78	21	2.1	21.350	GST03-2M □□□063C32	124
	62	27	2.3		76	22	2.9	22.000	GST04-2M □□□063C32	124
	56	30	1.5		68	24	1.9	24.595	GST03-2M □□□063C32	124
	55	30	2.3		67	25	2.9	24.933	GST04-2M □□□063C32	124
	49	34	1.3		60	27	1.7	27.618	GST03-2M □□□063C32	124
	48	35	1.8		59	28	2.3	28.333	GST04-2M □□□063C32	124
	43	39	1.9		53	31	2.3	31.600	GST04-2M □□□063C32	124
	43	39	1.2		52	31	1.4	32.000	GST03-2M □□□063C32	124
	38	44	1.5		46	35	1.8	35.909	GST04-2M □□□063C32	124
	38	44	1.0		46	35	1.3	35.933	GST03-2M □□□063C32	124
	38	44	3.1		46	35	3.8	36.267	GST05-3M □□□063C32	136
	35	48	1.5		42	39	1.9	39.600	GST04-2M □□□063C32	124
	33	51	0.9		40	41	1.1	41.455	GST03-2M □□□063C32	124
	30	55	1.2		37	44	1.5	45.000	GST04-2M □□□063C32	124



Selection tables

50 Hz, 60 Hz: P_N = 0.18 kW

n_N	1365 r/min				1695 r/min			i		
f_N	50 Hz				60 Hz					
	n_2 [r/min]	M_2 [Nm]	c		n_2 [r/min]	M_2 [Nm]	c			
	30	56	2.6		36	45	3.2	46.259	GST05-3M □□□063C32	136
					36	46	1.0	46.550	GST03-2M □□□063C32	124
	26	64	1.1		32	51	1.4	52.171	GST04-2M □□□063C32	124
					32	52	0.9	52.909	GST03-2M □□□063C32	124
	23	72	0.9		28	58	1.1	59.286	GST04-2M □□□063C32	124
	22	76	1.9		26	62	2.4	63.467	GST05-3M □□□063C32	136
	19	86	2.0		23	69	2.4	71.238	GST05-3M □□□063C32	136
	17	97	1.5		21	78	1.9	80.952	GST05-3M □□□063C32	136
	17	97	3.2		21	78	4.0	80.952	GST06-3M □□□063C32	136
	15	110	1.5		18	89	1.9	91.746	GST05-3M □□□063C32	136
	12	132	2.8		15	106	3.5	109.707	GST06-3M □□□063C32	136
	12	140	1.2		14	113	1.5	116.277	GST05-3M □□□063C32	136
	11	150	1.0		13	121	1.2	124.667	GST05-3M □□□063C32	136
	11	150	2.3		13	121	2.8	124.667	GST06-3M □□□063C32	136
	9.7	170	2.2		12	137	2.7	141.289	GST06-3M □□□063C32	136
	9.4	175	1.0		11	141	1.2	145.714	GST05-3M □□□063C32	136
	8.5	193	1.8		10	156	2.2	160.556	GST06-3M □□□063C32	136
					11	156	1.0	160.556	GST05-3M □□□063C32	136
	7.6	215	1.7		9.3	174	2.2	179.067	GST06-3M □□□063C32	136
					9.5	174	1.0	179.067	GST05-3M □□□063C32	136
					8.8	186	0.9	191.973	GST05-3M □□□063C32	136
	6.7	245	1.4		8.2	197	1.8	203.485	GST06-3M □□□063C32	136
	5.9	279	1.3		7.2	225	1.7	231.733	GST06-3M □□□063C32	136
	5.4	307	1.1		6.5	247	1.4	255.000	GST06-3M □□□063C32	136
	4.7	349	1.1		5.7	281	1.3	290.400	GST06-3M □□□063C32	136
	4.1	397	0.9		5.1	320	1.1	330.000	GST06-3M □□□063C32	136
	3.6	460	0.8		4.4	371	1.0	382.590	GST06-3M □□□063C32	136
					3.9	421	0.9	434.762	GST06-3M □□□063C32	136



Selection tables

50 Hz, 60 Hz: P_N = 0.18 kW

n_N	930 r/min				1140 r/min			i		
f_N	50 Hz				60 Hz					
	n_2 [r/min]	M_2 [Nm]	c		n_2 [r/min]	M_2 [Nm]	c			
	581	2.9	5.4		706	2.4	6.6	1.600	GST04-1M □□□071C13	112
	415	4.1	5.4		505	3.3	6.6	2.240	GST05-1M □□□071C13	112
	326	5.2	4.8		396	4.2	5.9	2.857	GST04-1M □□□071C13	112
	315	5.3	5.4		382	4.3	6.6	2.956	GST04-2M □□□071C13	124
	266	6.4	3.9		323	5.2	4.8	3.500	GST04-1M □□□071C13	112
	229	7.3	5.4		279	5.9	6.6	4.053	GST04-2M □□□071C13	124
	211	8.0	3.1		257	6.5	3.8	4.400	GST04-1M □□□071C13	112
	179	9.3	5.4		218	7.6	6.6	5.187	GST04-2M □□□071C13	124
	164	10	2.4		199	8.4	3.0	5.667	GST04-1M □□□071C13	112
	145	11	4.8		177	9.4	5.9	6.400	GST04-2M □□□071C13	124
	130	13	1.9		157	11	2.3	7.182	GST04-1M □□□071C13	112
	116	14	4.1		141	12	5.0	8.000	GST04-2M □□□071C13	124
	105	16	2.6		127	13	3.2	8.900	GST05-1M □□□071C13	112
	103	16	1.4		126	13	1.7	9.000	GST04-1M □□□071C13	112
	94	18	3.7		115	14	4.5	9.856	GST04-2M □□□071C13	124
	83	20	3.0		101	16	3.7	11.200	GST04-2M □□□071C13	124
	83	20	3.0		100	17	3.7	11.250	GST06-1M □□□071C13	112
	82	21	1.5		99	17	1.8	11.375	GST05-1M □□□071C13	112
	74	23	3.1		90	18	3.8	12.571	GST04-2M □□□071C13	124
	65	26	2.4		79	21	2.9	14.286	GST04-2M □□□071C13	124
	60	28	2.5		73	23	3.1	15.400	GST04-2M □□□071C13	124
	53	31	2.0		65	26	2.4	17.500	GST04-2M □□□071C13	124
	48	35	2.0		58	28	2.5	19.360	GST04-2M □□□071C13	124
	42	39	1.6		51	32	1.9	22.000	GST04-2M □□□071C13	124
	37	45	1.6		45	36	2.0	24.933	GST04-2M □□□071C13	124
	33	51	1.2		40	41	1.5	28.333	GST04-2M □□□071C13	124
	33	51	2.9		40	41	3.5	28.333	GST05-2M □□□071C13	124
	29	57	1.3		36	46	1.6	31.600	GST04-2M □□□071C13	124
	29	58	2.8		35	47	3.5	32.267	GST05-2M □□□071C13	124
	26	64	1.0		32	53	1.2	35.909	GST04-2M □□□071C13	124
	26	64	2.1		31	52	2.6	36.267	GST05-3M □□□071C13	136
	25	66	2.3		31	54	2.8	36.667	GST05-2M □□□071C13	124
	24	70	2.3		29	57	2.9	39.160	GST05-2M □□□071C13	124
	24	71	1.0		29	58	1.3	39.600	GST04-2M □□□071C13	124
	21	80	1.9		25	65	2.3	44.500	GST05-2M □□□071C13	124
	21	81	0.8		25	66	1.0	45.000	GST04-2M □□□071C13	124
	20	82	1.8		24	67	2.2	46.259	GST05-3M □□□071C13	136
	19	89	3.0		23	72	3.7	49.500	GST06-2M □□□071C13	124
	19	90	1.5		23	73	1.9	50.050	GST05-2M □□□071C13	124
	17	101	3.0		20	82	3.7	56.250	GST06-2M □□□071C13	124



Selection tables

50 Hz, 60 Hz: P_N = 0.18 kW

n_N	930 r/min				1140 r/min			i		
f_N	50 Hz				60 Hz					
	n_2 [r/min]	M_2 [Nm]	c		n_2 [r/min]	M_2 [Nm]	c			
	16	100	1.6		20	82	1.9	56.667	GST05-3M □□□071C13	136
	16	102	1.5		20	83	1.8	56.875	GST05-2M □□□071C13	124
	15	112	1.3		18	91	1.6	63.467	GST05-3M □□□071C13	136
	14	120	3.0		17	98	3.7	67.760	GST06-3M □□□071C13	136
	13	124	2.9		16	101	3.5	70.156	GST06-3M □□□071C13	136
	13	126	1.3		16	103	1.6	71.238	GST05-3M □□□071C13	136
	12	143	1.0		14	117	1.3	80.952	GST05-3M □□□071C13	136
	12	143	2.3		14	117	2.8	80.952	GST06-3M □□□071C13	136
	11	154	2.4		13	126	2.9	87.267	GST06-3M □□□071C13	136
	10	162	1.1		12	132	1.3	91.746	GST05-3M □□□071C13	136
	9.4	175	0.8		11	143	1.0	99.167	GST05-3M □□□071C13	136
	9.4	175	1.9		11	143	2.3	99.167	GST06-3M □□□071C13	136
	8.5	194	1.9		10	158	2.4	109.707	GST06-3M □□□071C13	136
	8.0	205	0.8		9.7	168	1.0	116.277	GST05-3M □□□071C13	136
	7.5	220	1.5		9.1	180	1.9	124.667	GST06-3M □□□071C13	136
	7.3	225	3.2		8.9	183	3.9	127.176	GST07-3M □□□071C13	136
	6.7	246	2.9		8.1	201	3.5	139.211	GST07-3M □□□071C13	136
	6.6	250	1.5		8.0	204	1.8	141.289	GST06-3M □□□071C13	136
	5.9	279	2.5		7.1	228	3.1	158.194	GST07-3M □□□071C13	136
	5.8	284	1.2		7.0	231	1.5	160.556	GST06-3M □□□071C13	136
	5.2	316	1.2		6.3	258	1.5	179.067	GST06-3M □□□071C13	136
	5.2	318	2.2		6.3	260	2.7	180.156	GST07-3M □□□071C13	136
	4.6	359	1.0		5.6	293	1.2	203.485	GST06-3M □□□071C13	136
	4.5	362	2.0		5.5	295	2.4	204.722	GST07-3M □□□071C13	136
	4.0	409	0.9		4.9	334	1.1	231.733	GST06-3M □□□071C13	136
	3.9	418	1.7		4.8	341	2.1	236.622	GST07-3M □□□071C13	136
	3.7	439	1.6		4.6	358	2.0	248.458	GST07-3M □□□071C13	136
	3.5	475	1.5		4.2	387	1.8	268.889	GST07-3M □□□071C13	136
	2.9	576	1.2		3.5	470	1.5	326.333	GST07-3M □□□071C13	136
	2.9	576	2.8		3.5	470	3.5	326.333	GST09-3M □□□071C13	136
	2.6	641	2.5		3.1	523	3.1	363.000	GST09-3M □□□071C13	136
	2.5	648	1.1		3.1	529	1.3	367.033	GST07-3M □□□071C13	136
	2.3	729	2.2		2.7	594	2.7	412.500	GST09-3M □□□071C13	136
	2.2	737	1.0		2.7	601	1.2	417.083	GST07-3M □□□071C13	136



Selection tables

50 Hz, 60 Hz: P_N = 0.25 kW

n_N	2710 r/min				3390 r/min			i		
f_N	50 Hz				60 Hz					
	n_2 [r/min]	M_2 [Nm]	c		n_2 [r/min]	M_2 [Nm]	c			
	1210	1.9	4.0		1478	1.6	4.7	2.240	GST04-1M □□□063C31	112
	949	2.5	3.8		1159	2.0	4.4	2.857	GST04-1M □□□063C31	112
	616	3.8	4.1		752	3.1	4.8	4.400	GST04-1M □□□063C31	112
	478	4.9	3.4		584	3.9	4.0	5.667	GST04-1M □□□063C31	112
	423	5.5	4.0		517	4.4	4.7	6.400	GST04-2M □□□063C31	124
	377	6.2	3.0		461	5.0	3.5	7.182	GST04-1M □□□063C31	112
	301	7.8	2.4		368	6.2	2.8	9.000	GST04-1M □□□063C31	112
	275	8.4	4.0		336	6.7	4.7	9.856	GST04-2M □□□063C31	124
	229	10	1.3		279	8.2	1.5	11.857	GST04-1M □□□063C31	112
	216	11	3.8		263	8.6	4.4	12.571	GST04-2M □□□063C31	124
	190	12	3.8		232	9.8	4.4	14.286	GST04-2M □□□063C31	124
	140	17	4.0		171	13	4.6	19.360	GST04-2M □□□063C31	124
	123	19	3.1		151	15	3.6	22.000	GST04-2M □□□063C31	124
	109	21	3.1		133	17	3.6	24.933	GST04-2M □□□063C31	124
	96	24	2.4		117	19	2.8	28.333	GST04-2M □□□063C31	124
	86	27	2.5		105	22	2.9	31.600	GST04-2M □□□063C31	124
	76	31	1.9		92	25	2.3	35.909	GST04-2M □□□063C31	124
	68	34	2.0		84	27	2.3	39.600	GST04-2M □□□063C31	124
	60	38	1.7		74	31	2.0	45.000	GST04-2M □□□063C31	124
	52	45	1.6		63	36	1.9	52.171	GST04-2M □□□063C31	124
	46	51	1.3		56	41	1.6	59.286	GST04-2M □□□063C31	124
	43	53	2.7		52	43	3.3	63.467	GST05-3M □□□063C31	136
	38	60	2.8		47	48	3.3	71.238	GST05-3M □□□063C31	136
	34	68	2.2		41	54	2.6	80.952	GST05-3M □□□063C31	136
	30	77	2.2		36	62	2.7	91.746	GST05-3M □□□063C31	136
	23	98	1.7		29	78	2.1	116.277	GST05-3M □□□063C31	136
	22	105	1.4		27	84	1.7	124.667	GST05-3M □□□063C31	136
	22	105	3.2		27	84	3.9	124.667	GST06-3M □□□063C31	136
	19	119	3.2		23	95	3.8	141.289	GST06-3M □□□063C31	136
	19	123	1.4		23	98	1.7	145.714	GST05-3M □□□063C31	136
	17	135	1.1		21	108	1.3	160.556	GST05-3M □□□063C31	136
	17	135	2.5		21	108	3.0	160.556	GST06-3M □□□063C31	136
	15	151	1.1		19	121	1.3	179.067	GST05-3M □□□063C31	136
	15	151	2.5		19	121	3.0	179.067	GST06-3M □□□063C31	136
	14	162	1.1		17	129	1.3	191.973	GST05-3M □□□063C31	136
	13	171	2.0		16	137	2.4	203.485	GST06-3M □□□063C31	136
	12	189	0.9		15	151	1.1	224.400	GST05-3M □□□063C31	136
	12	195	1.9		14	156	2.3	231.733	GST06-3M □□□063C31	136
	11	215	1.6		13	172	2.0	255.000	GST06-3M □□□063C31	136
	9.3	244	1.5		11	195	1.8	290.400	GST06-3M □□□063C31	136



Selection tables

50 Hz, 60 Hz: P_N = 0.25 kW

n_N	2710 r/min				3390 r/min			i		
f_N	50 Hz				60 Hz					
	n_2 [r/min]	M_2 [Nm]	c		n_2 [r/min]	M_2 [Nm]	c			
	8.2	278	1.3		10	222	1.5	330.000	GST06-3M □□□063C31	136
	7.1	322	1.2		8.7	257	1.4	382.590	GST06-3M □□□063C31	136
	6.2	366	1.0		7.6	293	1.2	434.762	GST06-3M □□□063C31	136



Selection tables

50 Hz, 60 Hz: P_N = 0.25 kW

n_N	1370 r/min				1680 r/min			i		
f_N	50 Hz				60 Hz					
	n_2 [r/min]	M_2 [Nm]	c		n_2 [r/min]	M_2 [Nm]	c			
	856	2.7	4.5		1044	2.2	5.4	1.600	GST04-1M □□□063C42	112
	669	3.5	5.2		816	2.9	6.2	2.048	GST04-1M □□□063C42	112
	612	3.8	4.5		746	3.1	5.4	2.240	GST05-1M □□□063C42	112
	528	4.4	4.1		643	3.6	4.8	2.597	GST03-2M □□□063C42	124
	480	4.9	4.8		585	4.0	5.7	2.857	GST04-1M □□□063C42	112
	464	5.0	4.5		565	4.1	5.4	2.956	GST04-2M □□□063C42	124
	401	5.8	3.3		489	4.7	3.9	3.413	GST03-2M □□□063C42	124
	391	6.0	4.2		477	4.9	4.9	3.500	GST04-1M □□□063C42	112
	338	6.9	4.5		412	5.6	5.4	4.053	GST04-2M □□□063C42	124
	314	7.4	2.8		382	6.0	3.3	4.368	GST03-2M □□□063C42	124
	311	7.6	3.3		380	6.2	3.9	4.400	GST04-1M □□□063C42	112
	264	8.8	5.2		322	7.2	6.2	5.187	GST04-2M □□□063C42	124
	258	9.0	3.0		314	7.3	3.5	5.312	GST03-2M □□□063C42	124
	242	9.7	2.6		295	7.9	3.0	5.667	GST04-1M □□□063C42	112
	230	10	2.8		280	8.2	3.4	5.965	GST03-2M □□□063C42	124
	214	11	4.5		261	8.8	5.4	6.400	GST05-2M □□□063C42	124
	196	12	2.5		239	9.6	3.0	6.982	GST03-2M □□□063C42	124
	191	12	2.0		233	10	2.4	7.182	GST04-1M □□□063C42	112
	175	13	2.4		213	11	2.8	7.840	GST03-2M □□□063C42	124
	171	14	4.3		209	11	5.1	8.000	GST04-2M □□□063C42	124
	154	15	2.8		188	12	3.3	8.900	GST05-1M □□□063C42	112
	154	15	3.2		188	12	3.8	8.900	GST06-1M □□□063C42	112
	153	15	2.2		187	12	2.5	8.935	GST03-2M □□□063C42	124
	152	15	1.2		186	13	1.4	9.000	GST04-1M □□□063C42	112
	139	17	3.9		169	14	4.6	9.856	GST04-2M □□□063C42	124
	137	17	2.0		166	14	2.4	10.033	GST03-2M □□□063C42	124
	122	19	3.2		149	15	3.7	11.200	GST04-2M □□□063C42	124
	122	19	2.6		148	16	3.0	11.250	GST06-1M □□□063C42	112
	120	20	1.4		147	16	1.6	11.375	GST05-1M □□□063C42	112
	120	19	1.8		146	16	2.2	11.429	GST03-2M □□□063C42	124
	109	21	3.3		133	17	3.8	12.571	GST04-2M □□□063C42	124
	107	22	1.7		130	18	2.0	12.833	GST03-2M □□□063C42	124
	96	24	2.5		117	20	3.0	14.286	GST04-2M □□□063C42	124
	92	25	1.6		113	20	1.8	14.836	GST03-2M □□□063C42	124
	89	26	2.7		108	21	3.3	15.400	GST04-2M □□□063C42	124
	82	28	1.5		100	23	1.8	16.660	GST03-2M □□□063C42	124
	78	30	2.1		95	24	2.6	17.500	GST04-2M □□□063C42	124
	72	32	1.3		88	26	1.6	19.013	GST03-2M □□□063C42	124
	71	33	2.1		86	27	2.6	19.360	GST04-2M □□□063C42	124
	64	36	1.2		78	29	1.5	21.350	GST03-2M □□□063C42	124



Selection tables

50 Hz, 60 Hz: P_N = 0.25 kW

n_N	1370 r/min				1680 r/min			i		
f_N	50 Hz				60 Hz					
	n_2 [r/min]	M_2 [Nm]	c		n_2 [r/min]	M_2 [Nm]	c			
	62	37	1.7		76	30	2.1	22.000	GST04-2M □□□063C42	124
	56	42	1.1		68	34	1.3	24.595	GST03-2M □□□063C42	124
	55	42	1.7		67	34	2.1	24.933	GST04-2M □□□063C42	124
	50	47	1.0		61	38	1.2	27.618	GST03-2M □□□063C42	124
	48	48	1.3		59	39	1.6	28.333	GST04-2M □□□063C42	124
	48	48	3.1		59	39	3.8	28.333	GST05-2M □□□063C42	124
	43	53	1.4		53	44	1.7	31.600	GST04-2M □□□063C42	124
	43	54	0.8		52	44	1.0	32.000	GST03-2M □□□063C42	124
	42	55	3.0		52	44	3.7	32.267	GST05-2M □□□063C42	124
	38	61	1.1		47	50	1.3	35.909	GST04-2M □□□063C42	124
					47	50	0.9	35.933	GST03-2M □□□063C42	124
	38	60	2.2		46	49	2.7	36.267	GST05-3M □□□063C42	136
	37	62	2.4		46	51	2.9	36.667	GST05-2M □□□063C42	124
	35	66	2.5		43	54	3.1	39.160	GST05-2M □□□063C42	124
	35	66	3.2		43	54	3.9	39.160	GST06-2M □□□063C42	124
	35	67	1.1		42	55	1.3	39.600	GST04-2M □□□063C42	124
	31	75	2.0		38	61	2.4	44.500	GST05-2M □□□063C42	124
	31	75	3.2		38	61	3.9	44.500	GST06-2M □□□063C42	124
	30	76	0.9		37	62	1.1	45.000	GST04-2M □□□063C42	124
	30	77	1.9		36	63	2.3	46.259	GST05-3M □□□063C42	136
	28	84	2.6		34	68	3.2	49.500	GST06-2M □□□063C42	124
	27	85	1.4		33	69	1.7	50.050	GST05-2M □□□063C42	124
	24	95	2.6		30	78	3.2	56.250	GST06-2M □□□063C42	124
	24	94	1.6		30	77	2.0	56.667	GST05-3M □□□063C42	136
	24	96	1.4		29	78	1.7	56.875	GST05-2M □□□063C42	124
	22	106	1.4		26	86	1.7	63.467	GST05-3M □□□063C42	136
	20	113	3.2		25	92	4.0	67.760	GST06-3M □□□063C42	136
	20	117	3.1		24	95	3.8	70.156	GST06-3M □□□063C42	136
	19	119	1.4		23	97	1.7	71.238	GST05-3M □□□063C42	136
	17	135	1.1		21	110	1.3	80.952	GST05-3M □□□063C42	136
	17	135	2.5		21	110	3.0	80.952	GST06-3M □□□063C42	136
	16	145	2.5		19	119	3.1	87.267	GST06-3M □□□063C42	136
	15	153	1.1		18	125	1.4	91.746	GST05-3M □□□063C42	136
	14	165	0.9		17	135	1.1	99.167	GST05-3M □□□063C42	136
	14	165	2.0		17	135	2.5	99.167	GST06-3M □□□063C42	136
	13	183	2.1		15	149	2.5	109.707	GST06-3M □□□063C42	136
	12	194	0.9		14	158	1.1	116.277	GST05-3M □□□063C42	136
	11	208	1.6		13	169	2.0	124.667	GST06-3M □□□063C42	136
					13	169	0.9	124.667	GST05-3M □□□063C42	136
	9.8	232	3.0		12	189	3.7	139.211	GST07-3M □□□063C42	136



Selection tables

50 Hz, 60 Hz: P_N = 0.25 kW

n_N	1370 r/min				1680 r/min			i		
f_N	50 Hz				60 Hz					
	n_2 [r/min]	M_2 [Nm]	c		n_2 [r/min]	M_2 [Nm]	c			
	9.7	235	1.6		12	192	2.0	141.289	GST06-3M □□□063C42	136
					12	198	0.9	145.714	GST05-3M □□□063C42	136
	8.7	263	2.7		11	215	3.3	158.194	GST07-3M □□□063C42	136
	8.5	267	1.3		10	218	1.6	160.556	GST06-3M □□□063C42	136
	7.7	298	1.3		9.3	243	1.5	179.067	GST06-3M □□□063C42	136
	7.6	300	2.4		9.3	245	2.9	180.156	GST07-3M □□□063C42	136
	6.7	339	1.0		8.2	276	1.3	203.485	GST06-3M □□□063C42	136
	6.7	341	2.1		8.2	278	2.6	204.722	GST07-3M □□□063C42	136
	5.9	386	1.0		7.2	315	1.2	231.733	GST06-3M □□□063C42	136
	5.8	394	1.8		7.1	321	2.2	236.622	GST07-3M □□□063C42	136
	5.5	414	1.7		6.7	337	2.1	248.458	GST07-3M □□□063C42	136
	5.4	420	3.2		6.6	342	3.9	252.167	GST09-3M □□□063C42	136
	5.4	425	0.8		6.6	346	1.0	255.000	GST06-3M □□□063C42	136
	5.1	448	1.6		6.2	365	1.9	268.889	GST07-3M □□□063C42	136
					5.8	394	1.0	290.400	GST06-3M □□□063C42	136
	4.2	543	1.3		5.1	443	1.6	326.333	GST07-3M □□□063C42	136
	4.2	543	3.0		5.1	443	3.7	326.333	GST09-3M □□□063C42	136
	3.8	605	2.6		4.6	493	3.2	363.000	GST09-3M □□□063C42	136
	3.7	611	1.2		4.6	498	1.4	367.033	GST07-3M □□□063C42	136
	3.3	687	2.4		4.1	560	2.9	412.500	GST09-3M □□□063C42	136
	3.3	695	1.0		4.0	566	1.3	417.083	GST07-3M □□□063C42	136



Selection tables

50 Hz, 60 Hz: P_N = 0.25 kW

n_N	930 r/min				1140 r/min			i		
f_N	50 Hz				60 Hz					
	n_2 [r/min]	M_2 [Nm]	c		n_2 [r/min]	M_2 [Nm]	c			
	581	4.0	3.9		706	3.3	4.7	1.600	GST04-1M □□□071C33	112
	454	5.2	4.4		552	4.2	5.4	2.048	GST04-1M □□□071C33	112
	415	5.7	3.9					2.240	GST05-1M □□□071C33	112
					509	4.6	5.3	2.240	GST04-1M □□□071C33	112
	326	7.2	3.5		396	5.9	4.2	2.857	GST04-1M □□□071C33	112
	315	7.4	3.9		382	6.0	4.7	2.956	GST04-2M □□□071C33	124
	266	8.8	2.8		323	7.2	3.5	3.500	GST04-1M □□□071C33	112
	229	10	3.9		279	8.2	4.7	4.053	GST04-2M □□□071C33	124
	211	11	2.2		257	9.1	2.8	4.400	GST04-1M □□□071C33	112
	179	13	3.9		218	11	4.7	5.187	GST04-2M □□□071C33	124
	164	14	1.7		199	12	2.1	5.667	GST04-1M □□□071C33	112
	164	14	3.1		199	12	3.8	5.667	GST05-1M □□□071C33	112
	145	16	3.5		177	13	4.2	6.400	GST04-2M □□□071C33	124
	132	18	3.2		161	14	4.0	7.040	GST04-2M □□□071C33	124
	130	18	1.4		157	15	1.7	7.182	GST04-1M □□□071C33	112
	127	19	2.5		154	15	3.1	7.333	GST05-1M □□□071C33	112
	127	19	3.1		154	15	3.8	7.333	GST06-1M □□□071C33	112
	116	20	3.0		141	16	3.6	8.000	GST04-2M □□□071C33	124
	105	23	1.9		127	18	2.3	8.900	GST05-1M □□□071C33	112
	105	23	2.7		127	18	3.3	8.900	GST06-1M □□□071C33	112
	103	23	1.0		126	19	1.3	9.000	GST04-1M □□□071C33	112
	103	22	2.8		125	18	3.4	9.010	GST04-2M □□□071C33	124
	94	25	2.6		115	20	3.2	9.856	GST04-2M □□□071C33	124
	83	28	2.2		101	23	2.6	11.200	GST04-2M □□□071C33	124
	83	28	2.2		100	23	2.7	11.250	GST06-1M □□□071C33	112
	82	29	1.1		99	23	1.3	11.375	GST05-1M □□□071C33	112
	74	31	2.2		90	26	2.7	12.571	GST04-2M □□□071C33	124
	65	36	1.7		79	29	2.1	14.286	GST04-2M □□□071C33	124
	65	36	3.1		79	29	3.8	14.356	GST05-2M □□□071C33	124
	60	38	1.8		73	31	2.2	15.400	GST04-2M □□□071C33	124
	57	40	3.1		70	33	3.8	16.190	GST05-2M □□□071C33	124
	53	44	1.4		65	36	1.7	17.500	GST04-2M □□□071C33	124
	48	48	1.5		58	39	1.8	19.360	GST04-2M □□□071C33	124
	46	50	3.2		56	41	3.9	20.044	GST05-2M □□□071C33	124
	42	55	1.1		51	45	1.4	22.000	GST04-2M □□□071C33	124
	41	57	2.5		50	46	3.1	22.778	GST05-2M □□□071C33	124
	37	62	1.1		45	51	1.4	24.933	GST04-2M □□□071C33	124
	37	62	2.6		45	51	3.2	24.933	GST05-2M □□□071C33	124
	33	71	0.9		40	58	1.1	28.333	GST04-2M □□□071C33	124
	33	71	2.1		40	58	2.6	28.333	GST05-2M □□□071C33	124



Selection tables

50 Hz, 60 Hz: P_N = 0.25 kW

n_N	930 r/min				1140 r/min			i		
f_N	50 Hz				60 Hz					
	n_2 [r/min]	M_2 [Nm]	c		n_2 [r/min]	M_2 [Nm]	c			
	29	79	0.9		36	64	1.1	31.600	GST04-2M □□□071C33	124
	29	80	2.0		35	66	2.5	32.267	GST05-2M □□□071C33	124
	29	80	3.1		35	66	3.8	32.267	GST06-2M □□□071C33	124
	26	89	1.5		31	73	1.8	36.267	GST05-3M □□□071C33	136
	25	91	1.6		31	74	2.0	36.667	GST05-2M □□□071C33	124
	25	91	3.1		31	74	3.8	36.667	GST06-2M □□□071C33	124
	24	98	1.7		29	80	2.1	39.160	GST05-2M □□□071C33	124
	24	98	2.7		29	80	3.3	39.160	GST06-2M □□□071C33	124
	21	108	3.1		26	88	3.8	44.000	GST06-3M □□□071C33	136
	21	111	1.3		25	90	1.6	44.500	GST05-2M □□□071C33	124
	21	111	2.7		25	90	3.3	44.500	GST06-2M □□□071C33	124
	20	113	1.3		24	93	1.6	46.259	GST05-3M □□□071C33	136
	19	123	2.2		23	101	2.7	49.500	GST06-2M □□□071C33	124
	19	125	1.1		23	102	1.3	50.050	GST05-2M □□□071C33	124
	18	125	2.6		22	102	3.2	51.022	GST06-3M □□□071C33	136
	17	132	2.6		21	108	3.2	53.900	GST06-3M □□□071C33	136
	17	140	2.2		20	114	2.7	56.250	GST06-2M □□□071C33	124
	16	139	1.1		20	113	1.4	56.667	GST05-3M □□□071C33	136
	16	142	1.1		20	116	1.3	56.875	GST05-2M □□□071C33	124
	15	156	0.9		18	127	1.1	63.467	GST05-3M □□□071C33	136
	14	166	2.2		17	136	2.7	67.760	GST06-3M □□□071C33	136
	13	172	2.1		16	140	2.6	70.156	GST06-3M □□□071C33	136
	13	175	1.0		16	143	1.2	71.238	GST05-3M □□□071C33	136
	12	199	1.7		14	162	2.1	80.952	GST06-3M □□□071C33	136
	11	214	1.7		13	175	2.1	87.267	GST06-3M □□□071C33	136
	9.4	243	1.4		11	198	1.7	99.167	GST06-3M □□□071C33	136
	8.5	269	1.4		10	220	1.7	109.707	GST06-3M □□□071C33	136
	8.3	275	2.6		10	224	3.2	111.915	GST07-3M □□□071C33	136
	7.5	306	1.1		9.1	249	1.4	124.667	GST06-3M □□□071C33	136
	7.3	312	2.3		8.9	255	2.8	127.176	GST07-3M □□□071C33	136
	6.7	342	2.1		8.1	279	2.5	139.211	GST07-3M □□□071C33	136
	6.6	347	1.1		8.0	283	1.3	141.289	GST06-3M □□□071C33	136
	5.9	388	1.8		7.1	317	2.2	158.194	GST07-3M □□□071C33	136
	5.8	394	0.9		7.0	321	1.1	160.556	GST06-3M □□□071C33	136
	5.2	439	0.9		6.3	358	1.0	179.067	GST06-3M □□□071C33	136
	5.2	442	1.6		6.3	361	2.0	180.156	GST07-3M □□□071C33	136
	5.1	449	3.1		6.2	366	3.8	182.844	GST09-3M □□□071C33	136
	4.5	502	1.4		5.5	410	1.7	204.722	GST07-3M □□□071C33	136
	4.5	510	3.1		5.4	416	3.8	207.778	GST09-3M □□□071C33	136
	3.9	580	1.2		4.8	474	1.5	236.622	GST07-3M □□□071C33	136



Selection tables

50 Hz, 60 Hz: P_N = 0.25 kW

n_N	930 r/min				1140 r/min			i		
f_N	50 Hz				60 Hz					
	n_2 [r/min]	M_2 [Nm]	c		n_2 [r/min]	M_2 [Nm]	c			
	3.9	580	2.8		4.8	474	3.4	236.622	GST09-3M □□□071C33	136
	3.7	610	1.2		4.6	497	1.4	248.458	GST07-3M □□□071C33	136
	3.7	619	2.6		4.5	505	3.2	252.167	GST09-3M □□□071C33	136
	3.5	660	1.1		4.2	538	1.3	268.889	GST07-3M □□□071C33	136
	3.5	660	2.5		4.2	538	3.0	268.889	GST09-3M □□□071C33	136
	2.9	801	0.9		3.5	653	1.1	326.333	GST07-3M □□□071C33	136
	2.9	801	2.0		3.5	653	2.5	326.333	GST09-3M □□□071C33	136
	2.6	891	1.8		3.1	726	2.2	363.000	GST09-3M □□□071C33	136
	2.3	1012	1.6		2.7	826	2.0	412.500	GST09-3M □□□071C33	136



Selection tables

50 Hz, 60 Hz: P_N = 0.37 kW

n_N	2720 r/min				3360 r/min			i		
f_N	50 Hz				60 Hz					
	n_2 [r/min]	M_2 [Nm]	c		n_2 [r/min]	M_2 [Nm]	c			
	952	3.7	5.6		1162	3.0	6.5	2.857	GST04-1M □□□071C11	112
	777	4.5	4.6		949	3.6	5.3	3.500	GST04-1M □□□071C11	112
	618	5.6	3.6		755	4.6	4.2	4.400	GST04-1M □□□071C11	112
	480	7.3	2.8		586	5.9	3.3	5.667	GST04-1M □□□071C11	112
	425	8.1	5.6		519	6.5	6.4	6.400	GST04-2M □□□071C11	124
	379	9.2	2.2		462	7.4	2.6	7.182	GST04-1M □□□071C11	112
	340	10	4.8		415	8.2	5.5	8.000	GST04-2M □□□071C11	124
	306	11	3.0		373	9.2	3.5	8.900	GST05-1M □□□071C11	112
	302	12	1.7		369	9.3	1.9	9.000	GST04-1M □□□071C11	112
	276	12	4.3		337	10	4.9	9.856	GST04-2M □□□071C11	124
	239	15	1.7		292	12	2.0	11.375	GST05-1M □□□071C11	112
	216	16	3.6		264	13	4.1	12.571	GST04-2M □□□071C11	124
	190	18	2.8		232	15	3.2	14.286	GST04-2M □□□071C11	124
	177	19	3.3		216	16	3.8	15.400	GST04-2M □□□071C11	124
	155	22	2.6		190	18	3.0	17.500	GST04-2M □□□071C11	124
	141	24	2.7		172	20	3.1	19.360	GST04-2M □□□071C11	124
	124	28	2.1		151	22	2.4	22.000	GST04-2M □□□071C11	124
	109	31	2.1		133	25	2.4	24.933	GST04-2M □□□071C11	124
	96	36	1.7		117	29	1.9	28.333	GST04-2M □□□071C11	124
	86	40	1.7		105	32	1.9	31.600	GST04-2M □□□071C11	124
	76	45	1.3		93	37	1.5	35.909	GST04-2M □□□071C11	124
	75	45	2.8		92	36	3.2	36.267	GST05-3M □□□071C11	136
	74	46	3.0		91	37	3.4	36.667	GST05-2M □□□071C11	124
	70	49	3.1		85	40	3.6	39.160	GST05-2M □□□071C11	124
	69	50	1.4		84	40	1.6	39.600	GST04-2M □□□071C11	124
	61	56	2.7		75	45	3.2	44.500	GST05-2M □□□071C11	124
	60	57	1.2		74	46	1.4	45.000	GST04-2M □□□071C11	124
	59	57	2.5		72	46	3.0	46.259	GST05-3M □□□071C11	136
	54	63	2.1		66	51	2.6	50.050	GST05-2M □□□071C11	124
	48	70	2.2		59	57	2.6	56.667	GST05-3M □□□071C11	136
	48	72	2.1		58	58	2.5	56.875	GST05-2M □□□071C11	124
	43	79	1.9		52	64	2.2	63.467	GST05-3M □□□071C11	136
	38	88	1.9		47	72	2.2	71.238	GST05-3M □□□071C11	136
	34	100	1.5		41	81	1.7	80.952	GST05-3M □□□071C11	136
	30	114	1.5		36	92	1.8	91.746	GST05-3M □□□071C11	136
	27	123	1.2		34	100	1.4	99.167	GST05-3M □□□071C11	136
	27	123	2.7		34	100	3.2	99.167	GST06-3M □□□071C11	136
	25	136	2.8		30	110	3.3	109.707	GST06-3M □□□071C11	136
	23	144	1.2		29	117	1.4	116.277	GST05-3M □□□071C11	136
	22	155	1.0		27	125	1.1	124.667	GST05-3M □□□071C11	136



Selection tables

50 Hz, 60 Hz: P_N = 0.37 kW

n_N	2720 r/min				3360 r/min			i		
f_N	50 Hz				60 Hz					
	n_2 [r/min]	M_2 [Nm]	c		n_2 [r/min]	M_2 [Nm]	c			
	22	155	2.2		27	125	2.6	124.667	GST06-3M □□□071C11	136
	19	175	2.1		24	142	2.5	141.289	GST06-3M □□□071C11	136
	19	181	0.9		23	146	1.1	145.714	GST05-3M □□□071C11	136
	17	199	1.7		21	161	2.0	160.556	GST06-3M □□□071C11	136
	15	222	1.7		19	180	2.0	179.067	GST06-3M □□□071C11	136
	15	224	3.2		18	181	3.8	180.156	GST07-3M □□□071C11	136
	13	253	1.4		16	204	1.6	203.485	GST06-3M □□□071C11	136
	13	254	2.8		16	206	3.3	204.722	GST07-3M □□□071C11	136
	12	288	1.3		14	233	1.6	231.733	GST06-3M □□□071C11	136
	12	294	2.4		14	238	2.9	236.622	GST07-3M □□□071C11	136
	11	308	2.3		13	250	2.7	248.458	GST07-3M □□□071C11	136
	11	317	1.1		13	256	1.3	255.000	GST06-3M □□□071C11	136
	10	334	2.1		12	270	2.5	268.889	GST07-3M □□□071C11	136
	9.4	361	1.0		11	292	1.2	290.400	GST06-3M □□□071C11	136
	8.3	405	1.8		10	328	2.1	326.333	GST07-3M □□□071C11	136
	8.2	410	0.9		10	332	1.0	330.000	GST06-3M □□□071C11	136
	7.4	456	1.5		9.1	369	1.8	367.033	GST07-3M □□□071C11	136
	6.6	512	3.2		8.1	415	3.8	412.500	GST09-3M □□□071C11	136
	6.5	518	1.4		8.0	419	1.6	417.083	GST07-3M □□□071C11	136



Selection tables

50 Hz, 60 Hz: P_N = 0.37 kW

n_N	1410 r/min				1720 r/min			i		
f_N	50 Hz				60 Hz					
	n_2 [r/min]	M_2 [Nm]	c		n_2 [r/min]	M_2 [Nm]	c			
	881	3.9	4.0		1069	3.2	4.6	1.600	GST04-1M □□□071C32	112
	689	5.1	4.5		835	4.1	5.3	2.048	GST04-1M □□□071C32	112
	629	5.5	4.0		763	4.5	4.6	2.240	GST05-1M □□□071C32	112
					768	4.5	5.2	2.240	GST04-1M □□□071C32	112
	543	6.3	2.8		658	5.2	3.3	2.597	GST03-2M □□□071C32	124
	494	7.1	3.5		599	5.8	4.1	2.857	GST04-1M □□□071C32	112
	477	7.2	4.0		579	5.9	4.6	2.956	GST04-2M □□□071C32	124
	413	8.3	2.3		501	6.8	2.7	3.413	GST03-2M □□□071C32	124
	403	8.6	2.9		489	7.1	3.4	3.500	GST04-1M □□□071C32	112
	348	9.9	4.0		422	8.1	4.6	4.053	GST04-2M □□□071C32	124
	323	11	2.0		392	8.7	2.3	4.368	GST03-2M □□□071C32	124
	321	11	2.3		389	8.9	2.7	4.400	GST04-1M □□□071C32	112
	272	13	4.0		330	10	4.6	5.187	GST04-2M □□□071C32	124
	265	13	2.1		322	11	2.4	5.312	GST03-2M □□□071C32	124
	249	14	1.8		302	11	2.1	5.667	GST04-1M □□□071C32	112
	249	14	3.2		302	11	3.7	5.667	GST05-1M □□□071C32	112
	236	15	2.0		287	12	2.3	5.965	GST03-2M □□□071C32	124
	220	16	3.5		267	13	4.1	6.400	GST04-2M □□□071C32	124
	202	17	1.7		245	14	2.0	6.982	GST03-2M □□□071C32	124
	196	18	1.4		238	15	1.6	7.182	GST04-1M □□□071C32	112
	192	18	2.6		233	15	3.0	7.333	GST05-1M □□□071C32	112
	192	18	3.2		233	15	3.7	7.333	GST06-1M □□□071C32	112
	180	19	1.7		218	16	1.9	7.840	GST03-2M □□□071C32	124
	176	19	3.0		214	16	3.5	8.000	GST04-2M □□□071C32	124
	158	22	1.9		192	18	2.2	8.900	GST05-1M □□□071C32	112
	158	22	2.8		192	18	3.2	8.900	GST06-1M □□□071C32	112
	158	22	1.5		191	18	1.7	8.935	GST03-2M □□□071C32	124
	157	22	1.0		190	18	1.2	9.000	GST04-1M □□□071C32	112
	157	22	2.9		190	18	3.3	9.010	GST04-2M □□□071C32	124
	143	24	2.7		174	20	3.1	9.856	GST04-2M □□□071C32	124
	141	24	1.4		170	20	1.7	10.033	GST03-2M □□□071C32	124
	126	27	2.2		153	22	2.6	11.200	GST04-2M □□□071C32	124
	125	28	2.2		152	23	2.6	11.250	GST06-1M □□□071C32	112
	124	28	1.1		150	23	1.3	11.375	GST05-1M □□□071C32	112
	123	28	1.3		150	23	1.5	11.429	GST03-2M □□□071C32	124
	112	31	2.3		136	25	2.6	12.571	GST04-2M □□□071C32	124
	110	31	1.2		133	26	1.4	12.833	GST03-2M □□□071C32	124
	99	35	1.8		120	28	2.0	14.286	GST04-2M □□□071C32	124
	98	35	3.2		119	29	3.7	14.356	GST05-2M □□□071C32	124
	95	36	1.1		115	30	1.3	14.836	GST03-2M □□□071C32	124



Selection tables

50 Hz, 60 Hz: P_N = 0.37 kW

n_N	1410 r/min				1720 r/min			i		
f_N	50 Hz				60 Hz					
	n_2 [r/min]	M_2 [Nm]	c		n_2 [r/min]	M_2 [Nm]	c			
	92	37	1.9		111	31	2.3	15.400	GST04-2M □□□071C32	124
	87	39	3.2		106	32	3.9	16.190	GST05-2M □□□071C32	124
	85	41	1.0		103	33	1.2	16.660	GST03-2M □□□071C32	124
	81	43	1.5		98	35	1.8	17.500	GST04-2M □□□071C32	124
	74	46	0.9		90	38	1.1	19.013	GST03-2M □□□071C32	124
	73	47	1.5		88	39	1.8	19.360	GST04-2M □□□071C32	124
	66	52	0.9		80	43	1.0	21.350	GST03-2M □□□071C32	124
	64	53	1.2		78	44	1.4	22.000	GST04-2M □□□071C32	124
	62	55	2.6		75	45	3.2	22.778	GST05-2M □□□071C32	124
					70	49	0.9	24.595	GST03-2M □□□071C32	124
	57	61	1.2		69	50	1.4	24.933	GST04-2M □□□071C32	124
	57	61	2.7		69	50	3.3	24.933	GST05-2M □□□071C32	124
					62	55	0.8	27.618	GST03-2M □□□071C32	124
	50	69	0.9		60	56	1.1	28.333	GST04-2M □□□071C32	124
	50	69	2.1		60	56	2.6	28.333	GST05-2M □□□071C32	124
	45	77	0.9		54	63	1.1	31.600	GST04-2M □□□071C32	124
	44	78	2.1		53	64	2.6	32.267	GST05-2M □□□071C32	124
	44	78	3.2		53	64	3.9	32.267	GST06-2M □□□071C32	124
	39	87	1.5		47	71	1.9	36.267	GST05-3M □□□071C32	136
	39	89	1.7		47	73	2.0	36.667	GST05-2M □□□071C32	124
	39	89	3.2		47	73	3.9	36.667	GST06-2M □□□071C32	124
	36	95	1.7		44	78	2.1	39.160	GST05-2M □□□071C32	124
	36	95	2.8		44	78	3.4	39.160	GST06-2M □□□071C32	124
	32	105	3.2		39	86	3.9	44.000	GST06-3M □□□071C32	136
	32	108	1.4		38	89	1.7	44.500	GST05-2M □□□071C32	124
	32	108	2.8		38	89	3.4	44.500	GST06-2M □□□071C32	124
	31	111	1.3		37	91	1.6	46.259	GST05-3M □□□071C32	136
	29	120	2.2		35	99	2.7	49.500	GST06-2M □□□071C32	124
	28	122	1.1		34	100	1.4	50.050	GST05-2M □□□071C32	124
	28	122	2.7		34	100	3.2	51.022	GST06-3M □□□071C32	136
	26	129	2.7		32	106	3.3	53.900	GST06-3M □□□071C32	136
	25	137	2.2		30	112	2.7	56.250	GST06-2M □□□071C32	124
	25	136	1.1		30	111	1.4	56.667	GST05-3M □□□071C32	136
	25	138	1.1		30	113	1.3	56.875	GST05-2M □□□071C32	124
	22	152	1.0		27	125	1.2	63.467	GST05-3M □□□071C32	136
	21	162	2.2		25	133	2.7	67.760	GST06-3M □□□071C32	136
	20	168	2.1		24	138	2.6	70.156	GST06-3M □□□071C32	136
	20	171	1.0		24	140	1.2	71.238	GST05-3M □□□071C32	136
	17	194	1.7		21	159	2.1	80.952	GST06-3M □□□071C32	136
	16	209	1.8		20	171	2.2	87.267	GST06-3M □□□071C32	136



Selection tables

50 Hz, 60 Hz: P_N = 0.37 kW

n_N	1410 r/min				1720 r/min			i		
f_N	50 Hz				60 Hz					
	n_2 [r/min]	M_2 [Nm]	c		n_2 [r/min]	M_2 [Nm]	c			
	14	237	1.4		17	195	1.7	99.167	GST06-3M □□□071C32	136
	13	263	1.4		16	215	1.7	109.707	GST06-3M □□□071C32	136
	13	268	2.6		15	220	3.2	111.915	GST07-3M □□□071C32	136
	11	299	1.1		14	245	1.4	124.667	GST06-3M □□□071C32	136
	11	305	2.3		13	250	2.8	127.176	GST07-3M □□□071C32	136
	10	333	2.1		12	273	2.6	139.211	GST07-3M □□□071C32	136
	10	338	1.1		12	277	1.4	141.289	GST06-3M □□□071C32	136
	8.9	379	1.9		11	311	2.3	158.194	GST07-3M □□□071C32	136
	8.8	384	0.9		11	315	1.1	160.556	GST06-3M □□□071C32	136
	7.9	429	0.9		9.6	352	1.1	179.067	GST06-3M □□□071C32	136
	7.8	431	1.6		9.5	354	2.0	180.156	GST07-3M □□□071C32	136
	7.7	438	3.2		9.4	359	3.9	182.844	GST09-3M □□□071C32	136
	6.9	490	1.4		8.4	402	1.8	204.722	GST07-3M □□□071C32	136
	6.8	498	3.2		8.2	408	3.9	207.778	GST09-3M □□□071C32	136
	6.0	567	1.2		7.2	465	1.5	236.622	GST07-3M □□□071C32	136
	6.0	567	2.8		7.2	465	3.5	236.622	GST09-3M □□□071C32	136
	5.7	595	1.2		6.9	488	1.5	248.458	GST07-3M □□□071C32	136
	5.6	604	2.7		6.8	495	3.3	252.167	GST09-3M □□□071C32	136
	5.2	644	1.1		6.4	528	1.3	268.889	GST07-3M □□□071C32	136
	5.2	644	2.5		6.4	528	3.1	268.889	GST09-3M □□□071C32	136
	4.3	781	0.9		5.2	641	1.1	326.333	GST07-3M □□□071C32	136
	4.3	781	2.1		5.2	641	2.5	326.333	GST09-3M □□□071C32	136
	3.9	869	1.9		4.7	713	2.3	363.000	GST09-3M □□□071C32	136
	3.8	879	0.8		4.7	721	1.0	367.033	GST07-3M □□□071C32	136
	3.4	988	1.6		4.2	810	2.0	412.500	GST09-3M □□□071C32	136



Selection tables

50 Hz, 60 Hz: P_N = 0.37 kW

n_N	950 r/min				1160 r/min			i		
f_N	50 Hz				60 Hz					
	n_2 [r/min]	M_2 [Nm]	c		n_2 [r/min]	M_2 [Nm]	c			
	594	5.9	3.3		719	4.8	4.0	1.600	GST04-1M □□□080C13	112
	464	7.5	3.0		562	6.1	3.7	2.048	GST04-1M □□□080C13	112
	424	8.2	3.0		513	6.7	3.7	2.240	GST04-1M □□□080C13	112
	333	10	2.4		403	8.6	2.9	2.857	GST04-1M □□□080C13	112
	321	11	3.7		389	8.7	4.5	2.956	GST04-2M □□□080C13	124
	271	13	1.9		329	11	2.4	3.500	GST04-1M □□□080C13	112
	234	15	3.1		284	12	3.8	4.053	GST04-2M □□□080C13	124
	216	16	1.6		261	13	1.9	4.400	GST04-1M □□□080C13	112
	209	17	3.2		252	14	4.0	4.556	GST05-1M □□□080C13	112
	208	16	2.9		252	14	3.6	4.571	GST04-2M □□□080C13	124
	183	19	2.7		222	15	3.3	5.187	GST04-2M □□□080C13	124
	168	21	1.2		203	17	1.5	5.667	GST04-1M □□□080C13	112
	168	21	2.6		203	17	3.2	5.667	GST05-1M □□□080C13	112
	162	21	2.5		197	17	3.1	5.850	GST04-2M □□□080C13	124
	148	23	2.4		180	19	2.9	6.400	GST04-2M □□□080C13	124
	135	25	2.2		163	21	2.7	7.040	GST04-2M □□□080C13	124
	130	27	1.7		157	22	2.1	7.333	GST05-1M □□□080C13	112
	119	29	2.0		144	24	2.5	8.000	GST04-2M □□□080C13	124
	107	33	1.3		129	27	1.6	8.900	GST05-1M □□□080C13	112
	107	33	2.6		129	27	3.2	8.900	GST06-1M □□□080C13	112
	105	33	1.9		128	27	2.4	9.010	GST04-2M □□□080C13	124
	96	36	1.8		117	29	2.2	9.856	GST04-2M □□□080C13	124
	85	40	1.5		103	33	1.8	11.200	GST04-2M □□□080C13	124
	85	40	3.2		103	33	3.9	11.200	GST05-2M □□□080C13	124
	84	41	1.5		102	34	1.9	11.250	GST06-1M □□□080C13	112
	84	41	2.8		102	34	3.4	11.250	GST07-1M □□□080C13	112
	76	45	1.5		92	37	1.9	12.571	GST04-2M □□□080C13	124
	73	47	2.9		88	38	3.6	13.016	GST05-2M □□□080C13	124
	67	52	1.2		81	42	1.4	14.286	GST04-2M □□□080C13	124
	66	52	2.7		80	42	3.3	14.356	GST05-2M □□□080C13	124
	62	56	1.3		75	46	1.5	15.400	GST04-2M □□□080C13	124
	59	58	2.5		71	48	3.1	16.190	GST05-2M □□□080C13	124
	54	63	1.0		66	52	1.2	17.500	GST04-2M □□□080C13	124
	54	63	2.2		66	52	2.7	17.500	GST05-2M □□□080C13	124
	49	70	1.0		59	57	1.2	19.360	GST04-2M □□□080C13	124
	47	72	2.2		57	59	2.7	20.044	GST05-2M □□□080C13	124
	42	82	1.8		51	67	2.1	22.778	GST05-2M □□□080C13	124
	38	90	1.8		46	74	2.2	24.933	GST05-2M □□□080C13	124
	34	102	1.4		41	84	1.8	28.333	GST05-2M □□□080C13	124
	34	102	3.1		41	84	3.8	28.333	GST06-2M □□□080C13	124



Selection tables

50 Hz, 60 Hz: P_N = 0.37 kW

n_N	950 r/min				1160 r/min			i		
f_N	50 Hz				60 Hz					
	n_2 [r/min]	M_2 [Nm]	c		n_2 [r/min]	M_2 [Nm]	c			
	29	116	1.4		36	95	1.7	32.267	GST05-2M □□□080C13	124
	29	116	3.1		36	95	3.8	32.267	GST06-2M □□□080C13	124
	26	129	1.0		32	106	1.3	36.267	GST05-3M □□□080C13	136
	26	132	1.1		31	108	1.4	36.667	GST05-2M □□□080C13	124
	26	132	2.4		31	108	3.0	36.667	GST06-2M □□□080C13	124
	24	141	1.2		29	116	1.4	39.160	GST05-2M □□□080C13	124
	24	141	2.6		29	116	3.2	39.160	GST06-2M □□□080C13	124
	24	139	2.3		29	114	2.8	39.200	GST06-3M □□□080C13	136
	22	156	2.1		26	128	2.6	44.000	GST06-3M □□□080C13	136
	21	161	0.9		26	132	1.1	44.500	GST05-2M □□□080C13	124
	21	161	2.0		26	132	2.5	44.500	GST06-2M □□□080C13	124
	21	164	0.9		25	135	1.1	46.259	GST05-3M □□□080C13	136
	19	179	1.6		23	146	1.9	49.500	GST06-2M □□□080C13	124
	19	179	2.8		23	146	3.4	49.500	GST07-2M □□□080C13	124
	19	181	1.8		23	149	2.2	51.022	GST06-3M □□□080C13	136
	18	192	1.8		21	157	2.2	53.900	GST06-3M □□□080C13	136
	17	203	1.6		20	166	1.9	56.250	GST06-2M □□□080C13	124
	17	203	2.8		20	166	3.4	56.250	GST07-2M □□□080C13	124
	15	231	3.1		18	189	3.7	65.079	GST07-3M □□□080C13	136
	14	241	1.5		17	197	1.9	67.760	GST06-3M □□□080C13	136
	14	249	1.4		16	204	1.8	70.156	GST06-3M □□□080C13	136
	14	249	2.8		16	204	3.5	70.156	GST07-3M □□□080C13	136
	12	284	2.5		14	232	3.1	79.762	GST07-3M □□□080C13	136
	12	288	1.2		14	236	1.4	80.952	GST06-3M □□□080C13	136
	11	306	2.3		13	250	2.8	85.983	GST07-3M □□□080C13	136
	11	310	1.2		13	254	1.5	87.267	GST06-3M □□□080C13	136
	9.7	347	2.0		12	284	2.5	97.708	GST07-3M □□□080C13	136
	9.6	352	1.0		12	289	1.2	99.167	GST06-3M □□□080C13	136
	8.7	390	1.0		11	319	1.2	109.707	GST06-3M □□□080C13	136
	8.5	398	1.8		10	326	2.2	111.915	GST07-3M □□□080C13	136
	7.5	452	1.6		9.0	370	1.9	127.176	GST07-3M □□□080C13	136
	6.8	495	1.4		8.3	405	1.7	139.211	GST07-3M □□□080C13	136
	6.7	502	3.2		8.1	411	3.9	141.289	GST09-3M □□□080C13	136
	6.0	562	1.3		7.3	460	1.5	158.194	GST07-3M □□□080C13	136
	5.9	571	2.8		7.2	467	3.5	160.556	GST09-3M □□□080C13	136
	5.3	640	1.1		6.4	524	1.3	180.156	GST07-3M □□□080C13	136
	5.2	650	2.5		6.3	532	3.0	182.844	GST09-3M □□□080C13	136
	4.6	728	1.0		5.6	596	1.2	204.722	GST07-3M □□□080C13	136
	4.6	739	2.2		5.5	605	2.7	207.778	GST09-3M □□□080C13	136
	4.0	841	0.8		4.9	689	1.0	236.622	GST07-3M □□□080C13	136



Selection tables

50 Hz, 60 Hz: P_N = 0.37 kW

n_N	950 r/min				1160 r/min			i		
f_N	50 Hz				60 Hz					
	n_2 [r/min]	M_2 [Nm]	c		n_2 [r/min]	M_2 [Nm]	c			
	4.0	841	1.9		4.9	689	2.3	236.622	GST09-3M □□□080C13	136
	4.0	841	3.2		4.9	689	3.9	236.622	GST11-3M □□□080C13	136
	3.8	883	0.8		4.6	723	1.0	248.458	GST07-3M □□□080C13	136
	3.8	896	1.8		4.6	734	2.2	252.167	GST09-3M □□□080C13	136
	3.8	896	3.1		4.6	734	3.8	252.167	GST11-3M □□□080C13	136
	3.5	956	1.7		4.3	783	2.1	268.889	GST09-3M □□□080C13	136
	3.5	956	3.0		4.3	783	3.6	268.889	GST11-3M □□□080C13	136
	2.9	1160	1.4		3.5	950	1.7	326.333	GST09-3M □□□080C13	136
	2.9	1160	2.5		3.5	950	3.0	326.333	GST11-3M □□□080C13	136
	2.6	1290	1.3		3.2	1057	1.5	363.000	GST09-3M □□□080C13	136
	2.6	1290	2.1		3.2	1057	2.6	363.000	GST11-3M □□□080C13	136
	2.3	1466	1.1		2.8	1201	1.4	412.500	GST09-3M □□□080C13	136
	2.3	1466	1.9		2.8	1201	2.4	412.500	GST11-3M □□□080C13	136



Selection tables

50 Hz, 60 Hz: P_N = 0.55 kW

n_N	2630 r/min				3240 r/min			i		
f_N	50 Hz				60 Hz					
	n_2 [r/min]	M_2 [Nm]	c		n_2 [r/min]	M_2 [Nm]	c			
	1644	3.1	4.1		2019	2.6	4.7	1.600	GST04-1M □□□071C31	112
	1284	4.0	4.7		1577	3.3	5.4	2.048	GST04-1M □□□071C31	112
	1174	4.4	4.1					2.240	GST05-1M □□□071C31	112
					1446	3.6	5.3	2.240	GST04-1M □□□071C31	112
	921	5.6	3.7		1131	4.6	4.2	2.857	GST04-1M □□□071C31	112
	890	5.7	4.1		1093	4.6	4.7	2.956	GST04-2M □□□071C31	124
	751	6.9	3.0		923	5.6	3.5	3.500	GST04-1M □□□071C31	112
	649	7.9	4.1		797	6.4	4.7	4.053	GST04-2M □□□071C31	124
	598	8.7	2.4		734	7.0	2.8	4.400	GST04-1M □□□071C31	112
	507	10	4.1		623	8.2	4.7	5.187	GST04-2M □□□071C31	124
	464	11	1.9		570	9.0	2.1	5.667	GST04-1M □□□071C31	112
	411	12	3.7		505	10	4.2	6.400	GST04-2M □□□071C31	124
	366	14	1.5		450	11	1.7	7.182	GST04-1M □□□071C31	112
	359	14	2.7		441	12	3.1	7.333	GST05-1M □□□071C31	112
	329	16	3.1		404	13	3.6	8.000	GST04-2M □□□071C31	124
	296	18	2.0		363	14	2.3	8.900	GST05-1M □□□071C31	112
	296	18	2.9		363	14	3.3	8.900	GST06-1M □□□071C31	112
	292	18	1.1		359	14	1.3	9.000	GST04-1M □□□071C31	112
	292	17	3.0		359	14	3.4	9.010	GST04-2M □□□071C31	124
	267	19	2.8		328	16	3.2	9.856	GST04-2M □□□071C31	124
	235	22	2.3		288	18	2.6	11.200	GST04-2M □□□071C31	124
	234	22	2.3		287	18	2.7	11.250	GST06-1M □□□071C31	112
	231	22	1.1		284	18	1.3	11.375	GST05-1M □□□071C31	112
	209	24	2.4		257	20	2.7	12.571	GST04-2M □□□071C31	124
	184	28	1.8		226	22	2.1	14.286	GST04-2M □□□071C31	124
	171	30	2.2		210	24	2.5	15.400	GST04-2M □□□071C31	124
	150	34	1.7		185	28	2.0	17.500	GST04-2M □□□071C31	124
	136	38	1.8		167	30	2.0	19.360	GST04-2M □□□071C31	124
	120	43	1.4		147	35	1.6	22.000	GST04-2M □□□071C31	124
	116	44	3.1		142	36	3.5	22.778	GST05-2M □□□071C31	124
	106	48	1.4		130	39	1.6	24.933	GST04-2M □□□071C31	124
	106	48	3.2		130	39	3.6	24.933	GST05-2M □□□071C31	124
	93	55	1.1		114	45	1.3	28.333	GST04-2M □□□071C31	124
	93	55	2.5		114	45	2.9	28.333	GST05-2M □□□071C31	124
	83	61	1.1		102	50	1.3	31.600	GST04-2M □□□071C31	124
	82	63	2.5		100	51	2.8	32.267	GST05-2M □□□071C31	124
	73	70	0.9		90	56	1.0	35.909	GST04-2M □□□071C31	124
	73	69	1.8		89	56	2.1	36.267	GST05-3M □□□071C31	136
	72	71	2.0		88	58	2.3	36.667	GST05-2M □□□071C31	124
	67	76	2.0		83	62	2.4	39.160	GST05-2M □□□071C31	124



Selection tables

50 Hz, 60 Hz: P_N = 0.55 kW

n_N	2630 r/min				3240 r/min			i		
f_N	50 Hz				60 Hz					
	n_2 [r/min]	M_2 [Nm]	c		n_2 [r/min]	M_2 [Nm]	c			
	66	77	0.9		82	62	1.0	39.600	GST04-2M □□□071C31	124
	59	86	1.7		73	70	2.1	44.500	GST05-2M □□□071C31	124
	57	88	1.6		70	72	2.0	46.259	GST05-3M □□□071C31	136
	53	96	2.8		65	78	3.4	49.500	GST06-2M □□□071C31	124
	53	97	1.4		65	79	1.7	50.050	GST05-2M □□□071C31	124
	47	109	2.8		57	88	3.4	56.250	GST06-2M □□□071C31	124
	46	108	1.4		57	88	1.7	56.667	GST05-3M □□□071C31	136
	46	110	1.4		57	89	1.6	56.875	GST05-2M □□□071C31	124
	41	121	1.2		51	98	1.4	63.467	GST05-3M □□□071C31	136
	39	129	2.8		48	105	3.4	67.760	GST06-3M □□□071C31	136
	38	134	2.7		46	109	3.2	70.156	GST06-3M □□□071C31	136
	37	136	1.2		45	110	1.5	71.238	GST05-3M □□□071C31	136
	33	154	1.0		40	125	1.1	80.952	GST05-3M □□□071C31	136
	33	154	2.2		40	125	2.6	80.952	GST06-3M □□□071C31	136
	30	167	2.2		37	135	2.7	87.267	GST06-3M □□□071C31	136
	29	175	1.0		35	142	1.2	91.746	GST05-3M □□□071C31	136
	27	189	1.8		33	154	2.1	99.167	GST06-3M □□□071C31	136
	24	209	1.8		29	170	2.2	109.707	GST06-3M □□□071C31	136
	21	238	1.4		26	193	1.7	124.667	GST06-3M □□□071C31	136
	21	243	2.9		25	197	3.5	127.176	GST07-3M □□□071C31	136
	19	266	2.7		23	216	3.2	139.211	GST07-3M □□□071C31	136
	19	270	1.4		23	219	1.7	141.289	GST06-3M □□□071C31	136
	17	302	2.4		20	245	2.8	158.194	GST07-3M □□□071C31	136
	16	306	1.1		20	249	1.3	160.556	GST06-3M □□□071C31	136
	15	342	1.1		18	277	1.3	179.067	GST06-3M □□□071C31	136
	15	344	2.1		18	279	2.5	180.156	GST07-3M □□□071C31	136
	13	388	0.9		16	315	1.1	203.485	GST06-3M □□□071C31	136
	13	391	1.8		16	317	2.2	204.722	GST07-3M □□□071C31	136
	11	442	0.8		14	359	1.0	231.733	GST06-3M □□□071C31	136
	11	452	1.6		14	367	1.9	236.622	GST07-3M □□□071C31	136
	11	474	1.5		13	385	1.8	248.458	GST07-3M □□□071C31	136
	9.8	513	1.4		12	417	1.7	268.889	GST07-3M □□□071C31	136
	9.8	513	3.2		12	417	3.8	268.889	GST09-3M □□□071C31	136
	8.1	623	1.1		9.9	506	1.4	326.333	GST07-3M □□□071C31	136
	8.1	623	2.6		9.9	506	3.1	326.333	GST09-3M □□□071C31	136
	7.3	693	2.3		8.9	562	2.8	363.000	GST09-3M □□□071C31	136
	7.2	700	1.0		8.8	569	1.2	367.033	GST07-3M □□□071C31	136
	6.4	787	2.1		7.8	639	2.5	412.500	GST09-3M □□□071C31	136
	6.3	796	0.9		7.7	646	1.1	417.083	GST07-3M □□□071C31	136



Selection tables

50 Hz, 60 Hz: P_N = 0.55 kW

n_N	1405 r/min				1720 r/min			i		
f_N	50 Hz				60 Hz					
	n_2 [r/min]	M_2 [Nm]	c		n_2 [r/min]	M_2 [Nm]	c			
	878	5.9	3.3		1066	4.8	3.8	1.600	GST04-1M □□□071C42	112
	686	7.5	3.0		833	6.2	3.5	2.048	GST04-1M □□□071C42	112
	627	8.2	3.0		761	6.7	3.5	2.240	GST04-1M □□□071C42	112
	541	9.4	1.9		657	7.7	2.2	2.597	GST03-2M □□□071C42	124
	492	11	2.4		597	8.6	2.8	2.857	GST04-1M □□□071C42	112
	475	11	3.6		577	8.8	4.3	2.956	GST04-2M □□□071C42	124
	412	12	1.6		500	10	1.8	3.413	GST03-2M □□□071C42	124
	401	13	1.9		487	11	2.3	3.500	GST04-1M □□□071C42	112
	347	15	3.1		421	12	3.6	4.053	GST04-2M □□□071C42	124
	322	16	1.3		390	13	1.5	4.368	GST03-2M □□□071C42	124
	319	16	1.5		388	13	1.8	4.400	GST04-1M □□□071C42	112
	308	17	3.2		374	14	3.8	4.556	GST05-1M □□□071C42	112
	307	17	2.9		373	14	3.4	4.571	GST04-2M □□□071C42	124
	271	19	2.7		329	15	3.1	5.187	GST04-2M □□□071C42	124
	265	19	1.4		321	16	1.6	5.312	GST03-2M □□□071C42	124
	248	21	1.2		301	17	1.4	5.667	GST04-1M □□□071C42	112
	248	21	2.6		301	17	3.0	5.667	GST05-1M □□□071C42	112
	248	21	3.2		301	17	3.7	5.667	GST06-1M □□□071C42	112
	240	21	2.5		291	17	2.9	5.850	GST04-2M □□□071C42	124
	236	22	1.3		286	18	1.5	5.965	GST03-2M □□□071C42	124
	220	23	2.4		266	19	2.8	6.400	GST04-2M □□□071C42	124
	201	25	1.2		244	21	1.4	6.982	GST03-2M □□□071C42	124
	200	26	2.2		242	21	2.6	7.040	GST04-2M □□□071C42	124
	192	27	1.7		233	22	2.0	7.333	GST05-1M □□□071C42	112
	192	27	2.9		233	22	3.4	7.333	GST06-1M □□□071C42	112
	179	28	1.1		218	23	1.3	7.840	GST03-2M □□□071C42	124
	176	29	2.0		213	24	2.4	8.000	GST04-2M □□□071C42	124
	158	33	1.3		192	27	1.5	8.900	GST05-1M □□□071C42	112
	158	33	2.4		192	27	2.8	8.900	GST06-1M □□□071C42	112
	157	32	1.0		191	26	1.2	8.935	GST03-2M □□□071C42	124
	156	33	1.9		189	27	2.2	9.010	GST04-2M □□□071C42	124
	143	36	1.8		173	29	2.1	9.856	GST04-2M □□□071C42	124
	140	36	0.9		170	30	1.1	10.033	GST03-2M □□□071C42	124
	125	41	1.5		152	33	1.7	11.200	GST04-2M □□□071C42	124
	125	41	3.1		152	33	3.7	11.200	GST05-2M □□□071C42	124
	125	41	1.4		152	34	1.6	11.250	GST06-1M □□□071C42	112
	123	41	0.9		149	34	1.0	11.429	GST03-2M □□□071C42	124
	112	46	1.5		136	37	1.8	12.571	GST04-2M □□□071C42	124
	110	47	0.8		134	38	0.9	12.833	GST03-2M □□□071C42	124
	108	47	2.9		131	39	3.4	13.016	GST05-2M □□□071C42	124



Selection tables

50 Hz, 60 Hz: P_N = 0.55 kW

n_N	1405 r/min				1720 r/min			i		
f_N	50 Hz				60 Hz					
	n_2 [r/min]	M_2 [Nm]	c		n_2 [r/min]	M_2 [Nm]	c			
	98	52	1.2		119	42	1.4	14.286	GST04-2M □□□071C42	124
	98	52	2.7		119	43	3.1	14.356	GST05-2M □□□071C42	124
					116	44	0.8	14.836	GST03-2M □□□071C42	124
	91	56	1.2		111	46	1.5	15.400	GST04-2M □□□071C42	124
	87	59	2.5		105	48	3.1	16.190	GST05-2M □□□071C42	124
					103	49	0.8	16.660	GST03-2M □□□071C42	124
	80	63	1.0		97	52	1.2	17.500	GST04-2M □□□071C42	124
	80	63	2.2		97	52	2.7	17.500	GST05-2M □□□071C42	124
	73	70	1.0		88	57	1.2	19.360	GST04-2M □□□071C42	124
	70	73	2.2		85	59	2.7	20.044	GST05-2M □□□071C42	124
	62	83	1.7		75	67	2.1	22.778	GST05-2M □□□071C42	124
	56	90	1.8		68	74	2.2	24.933	GST05-2M □□□071C42	124
	56	90	3.2		68	74	3.9	24.933	GST06-2M □□□071C42	124
	50	103	1.4		60	84	1.8	28.333	GST05-2M □□□071C42	124
	50	103	3.1		60	84	3.8	28.333	GST06-2M □□□071C42	124
	44	117	1.4		53	96	1.7	32.267	GST05-2M □□□071C42	124
	44	117	2.9		53	96	3.5	32.267	GST06-2M □□□071C42	124
	39	130	1.0		47	106	1.3	36.267	GST05-3M □□□071C42	136
	38	133	1.1		47	109	1.4	36.667	GST05-2M □□□071C42	124
	38	133	2.4		47	109	3.0	36.667	GST06-2M □□□071C42	124
	36	142	1.2		44	116	1.4	39.160	GST05-2M □□□071C42	124
	36	142	2.4		44	116	2.9	39.160	GST06-2M □□□071C42	124
	36	140	2.3		44	114	2.8	39.200	GST06-3M □□□071C42	136
	32	157	2.1		39	128	2.6	44.000	GST06-3M □□□071C42	136
	32	161	0.9		38	132	1.1	44.500	GST05-2M □□□071C42	124
	32	161	2.0		38	132	2.5	44.500	GST06-2M □□□071C42	124
	30	165	0.9		37	135	1.1	46.259	GST05-3M □□□071C42	136
	28	180	1.4		34	147	1.7	49.500	GST06-2M □□□071C42	124
	28	182	1.8		33	149	2.2	51.022	GST06-3M □□□071C42	136
	26	193	1.8		32	157	2.2	53.900	GST06-3M □□□071C42	136
	25	204	1.4		30	167	1.7	56.250	GST06-2M □□□071C42	124
	22	232	3.0		26	190	3.7	65.079	GST07-3M □□□071C42	136
	21	242	1.5		25	198	1.8	67.760	GST06-3M □□□071C42	136
	20	251	1.4		24	205	1.8	70.156	GST06-3M □□□071C42	136
	20	251	2.8		24	205	3.4	70.156	GST07-3M □□□071C42	136
	18	285	2.5		21	233	3.1	79.762	GST07-3M □□□071C42	136
	17	289	1.1		21	236	1.4	80.952	GST06-3M □□□071C42	136
	16	307	2.3		20	251	2.8	85.983	GST07-3M □□□071C42	136
	16	312	1.2		20	255	1.5	87.267	GST06-3M □□□071C42	136
	14	349	2.0		17	285	2.5	97.708	GST07-3M □□□071C42	136



Selection tables

50 Hz, 60 Hz: P_N = 0.55 kW

n_N	1405 r/min				1720 r/min			i		
f_N	50 Hz				60 Hz					
	n_2 [r/min]	M_2 [Nm]	c		n_2 [r/min]	M_2 [Nm]	c			
	14	354	0.9		17	289	1.2	99.167	GST06-3M □□□071C42	136
	13	392	1.0		16	320	1.2	109.707	GST06-3M □□□071C42	136
	13	400	1.8		15	327	2.2	111.915	GST07-3M □□□071C42	136
	11	454	1.6		13	371	1.9	127.176	GST07-3M □□□071C42	136
	10	497	1.4		12	406	1.7	139.211	GST07-3M □□□071C42	136
	9.9	505	3.2		12	412	3.9	141.289	GST09-3M □□□071C42	136
	8.9	565	1.3		11	462	1.5	158.194	GST07-3M □□□071C42	136
	8.8	574	2.8		11	469	3.5	160.556	GST09-3M □□□071C42	136
	7.8	644	1.1		9.5	526	1.3	180.156	GST07-3M □□□071C42	136
	7.7	653	2.5		9.3	534	3.0	182.844	GST09-3M □□□071C42	136
	6.9	731	1.0		8.3	597	1.2	204.722	GST07-3M □□□071C42	136
	6.8	742	2.2		8.2	606	2.7	207.778	GST09-3M □□□071C42	136
	5.9	845	0.8		7.2	691	1.0	236.622	GST07-3M □□□071C42	136
	5.9	845	1.9		7.2	691	2.3	236.622	GST09-3M □□□071C42	136
	5.6	901	1.8		6.8	736	2.2	252.167	GST09-3M □□□071C42	136
	5.2	961	1.7		6.3	785	2.1	268.889	GST09-3M □□□071C42	136
	4.3	1166	1.4		5.2	952	1.7	326.333	GST09-3M □□□071C42	136
	3.9	1297	1.2		4.7	1059	1.5	363.000	GST09-3M □□□071C42	136
	3.4	1474	1.1		4.1	1204	1.3	412.500	GST09-3M □□□071C42	136



Selection tables

50 Hz, 60 Hz: P_N = 0.55 kW

n_N	930 r/min				1140 r/min			i		
f_N	50 Hz				60 Hz					
	n_2 [r/min]	M_2 [Nm]	c		n_2 [r/min]	M_2 [Nm]	c			
	581	8.9	2.2		706	7.3	2.6	1.600	GST04-1M □□□080C33	112
	454	11	2.0		552	9.3	2.5	2.048	GST04-1M □□□080C33	112
	415	12	2.0		505	10	2.4	2.240	GST04-1M □□□080C33	112
	326	16	1.6		396	13	1.9	2.857	GST04-1M □□□080C33	112
	315	16	2.4		382	13	3.0	2.956	GST04-2M □□□080C33	124
	279	18	2.3		339	15	2.8	3.333	GST04-2M □□□080C33	124
	266	19	1.3		323	16	1.6	3.500	GST04-1M □□□080C33	112
	266	19	2.8		323	16	3.4	3.500	GST05-1M □□□080C33	112
	229	22	2.0		279	18	2.5	4.053	GST04-2M □□□080C33	124
	211	24	1.0		257	20	1.3	4.400	GST04-1M □□□080C33	112
	204	25	2.1		248	21	2.6	4.556	GST05-1M □□□080C33	112
	204	25	3.1		248	21	3.8	4.556	GST06-1M □□□080C33	112
	203	25	1.9		247	20	2.3	4.571	GST04-2M □□□080C33	124
	179	28	1.8		218	23	2.2	5.187	GST04-2M □□□080C33	124
	179	28	3.2		218	23	3.9	5.187	GST05-2M □□□080C33	124
	164	32	1.7		199	26	2.1	5.667	GST05-1M □□□080C33	112
	164	32	2.6		199	26	3.2	5.667	GST06-1M □□□080C33	112
	159	32	1.7		193	26	2.0	5.850	GST04-2M □□□080C33	124
	159	32	3.2		193	26	3.9	5.850	GST05-2M □□□080C33	124
	145	35	1.6		177	29	1.9	6.400	GST04-2M □□□080C33	124
	145	35	3.0		177	29	3.7	6.400	GST05-2M □□□080C33	124
	132	39	1.5		161	31	1.8	7.040	GST04-2M □□□080C33	124
	129	40	2.7		156	32	3.3	7.238	GST05-2M □□□080C33	124
	127	41	1.1		154	33	1.4	7.333	GST05-1M □□□080C33	112
	127	41	2.4		154	33	2.9	7.333	GST06-1M □□□080C33	112
	127	41	2.6		154	33	3.2	7.333	GST07-1M □□□080C33	112
	116	44	1.3		141	36	1.6	8.000	GST04-2M □□□080C33	124
	114	45	2.6		138	36	3.2	8.163	GST05-2M □□□080C33	124
	105	50	0.9		127	40	1.0	8.900	GST05-1M □□□080C33	112
	105	50	1.7		127	40	2.1	8.900	GST06-1M □□□080C33	112
	105	50	2.3		127	40	2.8	8.900	GST07-1M □□□080C33	112
	103	49	1.3		125	40	1.6	9.010	GST04-2M □□□080C33	124
	103	49	2.4		125	40	2.9	9.010	GST05-2M □□□080C33	124
	94	54	1.2		115	44	1.5	9.856	GST04-2M □□□080C33	124
	93	55	2.3		113	45	2.8	10.000	GST05-2M □□□080C33	124
	83	61	1.0		101	50	1.2	11.200	GST04-2M □□□080C33	124
	83	61	2.1		101	50	2.5	11.200	GST05-2M □□□080C33	124
	83	63	1.0		100	51	1.2	11.250	GST06-1M □□□080C33	112
	83	63	1.8		100	51	2.2	11.250	GST07-1M □□□080C33	112
	74	69	1.0		90	56	1.2	12.571	GST04-2M □□□080C33	124



Selection tables

50 Hz, 60 Hz: P_N = 0.55 kW

n_N	930 r/min				1140 r/min			i		
f_N	50 Hz				60 Hz					
	n_2 [r/min]	M_2 [Nm]	c		n_2 [r/min]	M_2 [Nm]	c			
	72	71	1.9		87	58	2.4	13.016	GST05-2M □□□080C33	124
	65	79	1.8		79	64	2.2	14.356	GST05-2M □□□080C33	124
	60	84	0.8		73	69	1.0	15.400	GST04-2M □□□080C33	124
	57	89	1.7		70	72	2.1	16.190	GST05-2M □□□080C33	124
	53	96	1.5		65	78	1.8	17.500	GST05-2M □□□080C33	124
	46	110	1.5		56	90	1.8	20.044	GST05-2M □□□080C33	124
	46	110	3.1		56	90	3.8	20.044	GST06-2M □□□080C33	124
	41	125	1.2		50	102	1.4	22.778	GST05-2M □□□080C33	124
	41	125	2.5		50	102	3.1	22.778	GST06-2M □□□080C33	124
	37	137	1.2		45	111	1.5	24.933	GST05-2M □□□080C33	124
	37	137	2.6		45	111	3.2	24.933	GST06-2M □□□080C33	124
	33	155	0.9		40	127	1.2	28.333	GST05-2M □□□080C33	124
	33	155	2.0		40	127	2.5	28.333	GST06-2M □□□080C33	124
	29	177	0.9		35	144	1.1	32.267	GST05-2M □□□080C33	124
	29	177	2.1		35	144	2.5	32.267	GST06-2M □□□080C33	124
	29	177	2.6		35	144	3.2	32.267	GST07-2M □□□080C33	124
	25	201	1.6		31	164	2.0	36.667	GST06-2M □□□080C33	124
	25	201	2.6		31	164	3.2	36.667	GST07-2M □□□080C33	124
	24	215	1.7		29	175	2.1	39.160	GST06-2M □□□080C33	124
	24	215	2.3		29	175	2.8	39.160	GST07-2M □□□080C33	124
	24	212	1.5		29	173	1.9	39.200	GST06-3M □□□080C33	136
	21	237	1.4		26	194	1.7	44.000	GST06-3M □□□080C33	136
	21	237	3.0		26	194	3.6	44.000	GST07-3M □□□080C33	136
	21	244	1.3		25	199	1.6	44.500	GST06-2M □□□080C33	124
	21	244	2.3		25	199	2.8	44.500	GST07-2M □□□080C33	124
	19	271	1.0		23	221	1.3	49.500	GST06-2M □□□080C33	124
	19	271	1.8		23	221	2.2	49.500	GST07-2M □□□080C33	124
	18	275	1.2		22	225	1.4	51.022	GST06-3M □□□080C33	136
	18	275	2.5		22	225	3.1	51.022	GST07-3M □□□080C33	136
	17	291	1.2		21	237	1.5	53.900	GST06-3M □□□080C33	136
	17	291	2.4		21	237	3.0	53.900	GST07-3M □□□080C33	136
	17	308	1.0		20	251	1.3	56.250	GST06-2M □□□080C33	124
	17	308	1.8		20	251	2.2	56.250	GST07-2M □□□080C33	124
	14	351	2.0		17	287	2.5	65.079	GST07-3M □□□080C33	136
	14	366	1.0		17	298	1.2	67.760	GST06-3M □□□080C33	136
	13	379	0.9		16	309	1.2	70.156	GST06-3M □□□080C33	136
	13	379	1.9		16	309	2.3	70.156	GST07-3M □□□080C33	136
	12	430	1.6		14	351	2.0	79.762	GST07-3M □□□080C33	136
	11	464	1.5		13	379	1.9	85.983	GST07-3M □□□080C33	136
	9.9	505	3.1		12	412	3.8	93.541	GST09-3M □□□080C33	136



Selection tables

50 Hz, 60 Hz: P_N = 0.55 kW

n_N	930 r/min				1140 r/min			i		
f_N	50 Hz				60 Hz					
	n_2 [r/min]	M_2 [Nm]	c		n_2 [r/min]	M_2 [Nm]	c			
	9.5	527	1.3		12	430	1.7	97.708	GST07-3M □□□080C33	136
	8.3	604	1.2		10	493	1.4	111.915	GST07-3M □□□080C33	136
	8.2	613	2.6		10	500	3.2	113.585	GST09-3M □□□080C33	136
	7.3	686	1.0		8.9	560	1.3	127.176	GST07-3M □□□080C33	136
	7.2	697	2.3		8.8	568	2.8	129.074	GST09-3M □□□080C33	136
	6.7	751	0.9		8.1	613	1.2	139.211	GST07-3M □□□080C33	136
	6.6	763	2.1		8.0	622	2.6	141.289	GST09-3M □□□080C33	136
	5.9	854	0.8		7.1	697	1.0	158.194	GST07-3M □□□080C33	136
	5.8	867	1.9		7.0	707	2.3	160.556	GST09-3M □□□080C33	136
	5.1	987	1.6		6.2	805	2.0	182.844	GST09-3M □□□080C33	136
	4.5	1121	1.4		5.4	915	1.8	207.778	GST09-3M □□□080C33	136
	4.5	1121	2.5		5.4	915	3.1	207.778	GST11-3M □□□080C33	136
	3.9	1277	1.3		4.8	1042	1.5	236.622	GST09-3M □□□080C33	136
	3.9	1277	2.1		4.8	1042	2.6	236.622	GST11-3M □□□080C33	136
	3.7	1361	1.2		4.5	1110	1.5	252.167	GST09-3M □□□080C33	136
	3.7	1361	2.1		4.5	1110	2.5	252.167	GST11-3M □□□080C33	136
	3.5	1451	1.1		4.2	1184	1.4	268.889	GST09-3M □□□080C33	136
	3.5	1451	2.0		4.2	1184	2.4	268.889	GST11-3M □□□080C33	136
	2.9	1761	0.9		3.5	1437	1.1	326.333	GST09-3M □□□080C33	136
	2.9	1761	1.6		3.5	1437	2.0	326.333	GST11-3M □□□080C33	136
	2.6	1959	0.8		3.1	1598	1.0	363.000	GST09-3M □□□080C33	136
	2.6	1959	1.4		3.1	1598	1.7	363.000	GST11-3M □□□080C33	136
	2.3	2226	1.3		2.7	1816	1.6	412.500	GST11-3M □□□080C33	136



Selection tables

50 Hz, 60 Hz: P_N = 0.75 kW

n_N	1410 r/min				1720 r/min			i		
f_N	50 Hz				60 Hz					
	n_2 [r/min]	M_2 [Nm]	c		n_2 [r/min]	M_2 [Nm]	c			
	881	8.0	2.4		1069	6.6	2.8	1.600	GST04-1M □□□080C32	114
	689	10	2.2		835	8.4	2.6	2.048	GST04-1M □□□080C32	114
	630	11	2.2		763	9.2	2.6	2.240	GST04-1M □□□080C32	114
	494	14	1.7		599	12	2.0	2.857	GST04-1M □□□080C32	114
	477	15	2.7		579	12	3.1	2.956	GST04-2M □□□080C32	126
	423	16	2.5		513	13	3.0	3.333	GST04-2M □□□080C32	126
	403	18	1.4		489	14	1.7	3.500	GST04-1M □□□080C32	114
	403	18	3.1		489	14	3.6	3.500	GST05-1M □□□080C32	114
	348	20	2.3		422	16	2.6	4.053	GST04-2M □□□080C32	126
	321	22	1.1		389	18	1.3	4.400	GST04-1M □□□080C32	114
	310	23	2.4		375	19	2.8	4.556	GST05-1M □□□080C32	114
	308	23	2.1		374	18	2.5	4.571	GST04-2M □□□080C32	126
	272	26	2.0		330	21	2.3	5.187	GST04-2M □□□080C32	126
	249	28	0.9		302	23	1.0	5.667	GST04-1M □□□080C32	114
	249	28	1.9		302	23	2.2	5.667	GST05-1M □□□080C32	114
	249	28	2.9		302	23	3.4	5.667	GST06-1M □□□080C32	114
	241	29	1.8		292	24	2.2	5.850	GST04-2M □□□080C32	126
	220	32	1.7		267	26	2.0	6.400	GST04-2M □□□080C32	126
	200	35	1.6		243	28	1.9	7.040	GST04-2M □□□080C32	126
	195	36	3.0		236	29	3.5	7.238	GST05-2M □□□080C32	126
	192	37	1.3		233	30	1.5	7.333	GST05-1M □□□080C32	114
	192	37	2.6		233	30	3.1	7.333	GST06-1M □□□080C32	114
	192	37	2.9		233	30	3.4	7.333	GST07-1M □□□080C32	114
	176	39	1.5		214	32	1.7	8.000	GST04-2M □□□080C32	126
	173	40	2.9		210	33	3.3	8.163	GST05-2M □□□080C32	126
	158	45	0.9		192	37	1.1	8.900	GST05-1M □□□080C32	114
	158	45	1.9		192	37	2.2	8.900	GST06-1M □□□080C32	114
	158	45	2.5		192	37	3.0	8.900	GST07-1M □□□080C32	114
	157	44	1.4		190	36	1.6	9.010	GST04-2M □□□080C32	126
	157	44	2.7		190	36	3.1	9.010	GST05-2M □□□080C32	126
	143	49	1.3		174	40	1.6	9.856	GST04-2M □□□080C32	126
	141	49	2.5		171	40	2.9	10.000	GST05-2M □□□080C32	126
	126	55	1.1		153	45	1.3	11.200	GST04-2M □□□080C32	126
	126	55	2.3		153	45	2.7	11.200	GST05-2M □□□080C32	126
	125	56	1.1		152	46	1.3	11.250	GST06-1M □□□080C32	114
	125	56	2.0		152	46	2.4	11.250	GST07-1M □□□080C32	114
	112	62	1.1		136	51	1.3	12.571	GST04-2M □□□080C32	126
	108	64	2.1		131	53	2.5	13.016	GST05-2M □□□080C32	126
	99	70	0.9		120	58	1.0	14.286	GST04-2M □□□080C32	126
	98	71	2.0		119	58	2.3	14.356	GST05-2M □□□080C32	126



Selection tables

50 Hz, 60 Hz: P_N = 0.75 kW

n_N	1410 r/min				1720 r/min			i		
f_N	50 Hz				60 Hz					
	n_2 [r/min]	M_2 [Nm]	c		n_2 [r/min]	M_2 [Nm]	c			
	92	76	0.9		111	62	1.1	15.400	GST04-2M □□□080C32	126
	87	80	1.9		106	65	2.3	16.190	GST05-2M □□□080C32	126
	81	86	1.6		98	71	2.0	17.500	GST05-2M □□□080C32	126
	70	99	1.6		85	81	2.0	20.044	GST05-2M □□□080C32	126
	62	112	1.3		75	92	1.6	22.778	GST05-2M □□□080C32	126
	62	112	2.8		75	92	3.4	22.778	GST06-2M □□□080C32	126
	57	123	1.3		69	101	1.6	24.933	GST05-2M □□□080C32	126
	57	123	2.9		69	101	3.5	24.933	GST06-2M □□□080C32	126
	50	140	1.1		60	114	1.3	28.333	GST05-2M □□□080C32	126
	50	140	2.3		60	114	2.8	28.333	GST06-2M □□□080C32	126
	44	159	1.0		53	130	1.3	32.267	GST05-2M □□□080C32	126
	44	159	2.3		53	130	2.8	32.267	GST06-2M □□□080C32	126
	44	159	2.9		53	130	3.5	32.267	GST07-2M □□□080C32	126
	39	181	0.8		47	148	1.0	36.667	GST05-2M □□□080C32	126
	39	181	1.8		47	148	2.2	36.667	GST06-2M □□□080C32	126
	39	181	2.9		47	148	3.5	36.667	GST07-2M □□□080C32	126
	36	193	0.9		44	158	1.0	39.160	GST05-2M □□□080C32	126
	36	193	1.9		44	158	2.3	39.160	GST06-2M □□□080C32	126
	36	193	2.5		44	158	3.1	39.160	GST07-2M □□□080C32	126
	36	190	1.7		44	156	2.1	39.200	GST06-3M □□□080C32	138
	32	214	1.6		39	175	1.9	44.000	GST06-3M □□□080C32	138
	32	219	1.5		38	180	1.8	44.500	GST06-2M □□□080C32	126
	32	219	2.5		38	180	3.1	44.500	GST07-2M □□□080C32	126
	29	244	1.1		35	200	1.4	49.500	GST06-2M □□□080C32	126
	29	244	2.0		35	200	2.5	49.500	GST07-2M □□□080C32	126
	28	248	1.3		34	203	1.6	51.022	GST06-3M □□□080C32	138
	28	248	2.8		34	203	3.4	51.022	GST07-3M □□□080C32	138
	26	262	1.3		32	214	1.6	53.900	GST06-3M □□□080C32	138
	26	262	2.7		32	214	3.3	53.900	GST07-3M □□□080C32	138
	25	277	1.1		30	227	1.4	56.250	GST06-2M □□□080C32	126
	25	277	2.0		30	227	2.5	56.250	GST07-2M □□□080C32	126
	22	316	2.2		26	259	2.7	65.079	GST07-3M □□□080C32	138
	21	329	1.1		25	270	1.4	67.760	GST06-3M □□□080C32	138
	20	341	1.1		24	279	1.3	70.156	GST06-3M □□□080C32	138
	20	341	2.1		24	279	2.5	70.156	GST07-3M □□□080C32	138
	18	387	1.8		21	317	2.2	79.762	GST07-3M □□□080C32	138
	17	393	0.8		21	322	1.0	80.952	GST06-3M □□□080C32	138
	16	417	1.7		20	342	2.1	85.983	GST07-3M □□□080C32	138
	16	424	0.9		20	347	1.1	87.267	GST06-3M □□□080C32	138
	14	474	1.5		18	389	1.8	97.708	GST07-3M □□□080C32	138



Selection tables

50 Hz, 60 Hz: P_N = 0.75 kW

n_N	1410 r/min				1720 r/min			i		
f_N	50 Hz				60 Hz					
	n_2 [r/min]	M_2 [Nm]	c		n_2 [r/min]	M_2 [Nm]	c			
	13	543	1.3		15	445	1.6	111.915	GST07-3M □□□080C32	138
	12	551	2.9		15	452	3.6	113.585	GST09-3M □□□080C32	138
	11	617	1.2		13	506	1.4	127.176	GST07-3M □□□080C32	138
	11	627	2.6		13	514	3.1	129.074	GST09-3M □□□080C32	138
	10	676	1.0		12	554	1.3	139.211	GST07-3M □□□080C32	138
	10	686	2.4		12	562	2.9	141.289	GST09-3M □□□080C32	138
	8.9	768	0.9		11	630	1.1	158.194	GST07-3M □□□080C32	138
	8.8	779	2.1		11	639	2.5	160.556	GST09-3M □□□080C32	138
	7.8	875	0.8		9.5	717	1.0	180.156	GST07-3M □□□080C32	138
	7.7	888	1.8		9.4	728	2.2	182.844	GST09-3M □□□080C32	138
	6.8	1009	1.6		8.2	827	2.0	207.778	GST09-3M □□□080C32	138
	6.8	1009	2.8		8.2	827	3.4	207.778	GST11-3M □□□080C32	138
	6.0	1149	1.4		7.2	942	1.7	236.622	GST09-3M □□□080C32	138
	6.0	1149	2.3		7.2	942	2.9	236.622	GST11-3M □□□080C32	138
	5.6	1224	1.3		6.8	1003	1.6	252.167	GST09-3M □□□080C32	138
	5.6	1224	2.3		6.8	1003	2.8	252.167	GST11-3M □□□080C32	138
	5.2	1305	1.2		6.4	1070	1.5	268.889	GST09-3M □□□080C32	138
	5.2	1305	2.2		6.4	1070	2.7	268.889	GST11-3M □□□080C32	138
	4.3	1584	1.0		5.2	1299	1.2	326.333	GST09-3M □□□080C32	138
	4.3	1584	1.8		5.2	1299	2.2	326.333	GST11-3M □□□080C32	138
	3.9	1762	0.9		4.7	1445	1.1	363.000	GST09-3M □□□080C32	138
	3.9	1762	1.5		4.7	1445	1.9	363.000	GST11-3M □□□080C32	138
	3.4	2002	0.8		4.2	1641	1.0	412.500	GST09-3M □□□080C32	138
	3.4	2002	1.4		4.2	1641	1.7	412.500	GST11-3M □□□080C32	138



Selection tables

50 Hz, 60 Hz: P_N = 1.1 kW

n_N	1430 r/min				1740 r/min			i		
f_N	50 Hz				60 Hz					
	n_2 [r/min]	M_2 [Nm]	c		n_2 [r/min]	M_2 [Nm]	c			
	894	12	1.7		1081	9.5	1.9	1.600	GST04-1M □□□090C12	114
	698	15	1.5		845	12	1.8	2.048	GST04-1M □□□090C12	114
	638	16	1.5		772	13	1.8	2.240	GST04-1M □□□090C12	114
	501	21	1.2		606	17	1.4	2.857	GST04-1M □□□090C12	114
	501	21	2.6		606	17	3.0	2.857	GST05-1M □□□090C12	114
	484	21	1.9		585	17	2.2	2.956	GST04-2M □□□090C12	126
	484	21	3.0		585	17	3.5	2.956	GST05-2M □□□090C12	126
	429	24	1.8		519	20	2.0	3.333	GST04-2M □□□090C12	126
	409	25	1.0		494	21	1.1	3.500	GST04-1M □□□090C12	114
	409	25	2.1		494	21	2.5	3.500	GST05-1M □□□090C12	114
	353	29	1.6		427	24	1.8	4.053	GST04-2M □□□090C12	126
	353	29	2.8		427	24	3.3	4.053	GST05-2M □□□090C12	126
	314	33	1.6		380	27	1.9	4.556	GST05-1M □□□090C12	114
	314	33	3.2		380	27	3.7	4.556	GST06-1M □□□090C12	114
	313	33	1.5		378	27	1.7	4.571	GST04-2M □□□090C12	126
	313	33	2.8		378	27	3.2	4.571	GST05-2M □□□090C12	126
	276	37	1.4		334	30	1.6	5.187	GST04-2M □□□090C12	126
	276	37	2.4		334	30	2.8	5.187	GST05-2M □□□090C12	126
	252	41	1.3		305	34	1.5	5.667	GST05-1M □□□090C12	114
	252	41	2.6		305	34	3.0	5.667	GST06-1M □□□090C12	114
	244	42	1.3		296	34	1.5	5.850	GST04-2M □□□090C12	126
	244	42	2.4		296	34	2.8	5.850	GST05-2M □□□090C12	126
	223	46	1.2		270	37	1.4	6.400	GST04-2M □□□090C12	126
	223	46	2.3		270	37	2.7	6.400	GST05-2M □□□090C12	126
	203	50	1.1		246	41	1.3	7.040	GST04-2M □□□090C12	126
	198	52	2.1		239	42	2.4	7.238	GST05-2M □□□090C12	126
	195	53	1.9		236	44	2.2	7.333	GST06-1M □□□090C12	114
	179	57	1.0		216	47	1.2	8.000	GST04-2M □□□090C12	126
	175	58	2.0		212	48	2.3	8.163	GST05-2M □□□090C12	126
	161	64	1.3		194	53	1.5	8.900	GST06-1M □□□090C12	114
	161	64	2.8		194	53	3.2	8.900	GST07-1M □□□090C12	114
	159	64	1.0		192	53	1.1	9.010	GST04-2M □□□090C12	126
	159	64	1.9		192	53	2.1	9.010	GST05-2M □□□090C12	126
	145	70	0.9		176	58	1.1	9.856	GST04-2M □□□090C12	126
	143	71	1.7		173	59	2.0	10.000	GST05-2M □□□090C12	126
	128	80	1.6		155	66	1.9	11.200	GST05-2M □□□090C12	126
	127	81	1.7		154	67	1.9	11.250	GST07-1M □□□090C12	114
	127	81	2.7		154	67	3.1	11.250	GST09-1M □□□090C12	114
	110	93	1.5		133	76	1.7	13.016	GST05-2M □□□090C12	126
	100	102	3.0		121	84	3.5	14.286	GST06-2M □□□090C12	126



Selection tables

50 Hz, 60 Hz: P_N = 1.1 kW

n_N	1430 r/min				1740 r/min			i		
f_N	50 Hz				60 Hz					
	n_2 [r/min]	M_2 [Nm]	c		n_2 [r/min]	M_2 [Nm]	c			
	100	102	1.4		121	84	1.6	14.356	GST05-2M □□□090C12	126
	93	110	2.9		112	90	3.5	15.400	GST06-2M □□□090C12	126
	88	115	1.3		107	95	1.6	16.190	GST05-2M □□□090C12	126
	82	125	1.1		99	103	1.4	17.500	GST05-2M □□□090C12	126
	82	125	2.5		99	103	3.1	17.500	GST06-2M □□□090C12	126
	71	143	1.1		86	117	1.4	20.044	GST05-2M □□□090C12	126
	71	143	2.5		86	117	3.0	20.044	GST06-2M □□□090C12	126
	63	162	0.9		76	133	1.1	22.778	GST05-2M □□□090C12	126
	63	162	1.9		76	133	2.4	22.778	GST06-2M □□□090C12	126
	57	178	0.9		69	146	1.1	24.933	GST05-2M □□□090C12	126
	57	178	2.0		69	146	2.5	24.933	GST06-2M □□□090C12	126
	51	202	1.6		61	166	1.9	28.333	GST06-2M □□□090C12	126
	44	230	1.6		54	189	1.9	32.267	GST06-2M □□□090C12	126
	44	230	3.1		54	189	3.7	32.267	GST07-2M □□□090C12	126
	39	261	1.2		47	215	1.5	36.667	GST06-2M □□□090C12	126
	39	261	2.7		47	215	3.3	36.667	GST07-2M □□□090C12	126
	37	279	1.3		44	229	1.6	39.160	GST06-2M □□□090C12	126
	37	279	2.5		44	229	3.1	39.160	GST07-2M □□□090C12	126
	37	275	1.2		44	226	1.4	39.200	GST06-3M □□□090C12	138
	37	275	2.5		44	226	3.1	39.200	GST07-3M □□□090C12	138
	33	309	1.1		39	254	1.3	44.000	GST06-3M □□□090C12	138
	33	309	2.3		39	254	2.8	44.000	GST07-3M □□□090C12	138
	32	317	1.0		39	261	1.2	44.500	GST06-2M □□□090C12	126
	32	317	2.2		39	261	2.7	44.500	GST07-2M □□□090C12	126
	29	353	1.7		35	290	2.1	49.500	GST07-2M □□□090C12	126
	29	353	2.7		35	290	3.3	49.500	GST09-2M □□□090C12	126
	28	358	0.9		34	294	1.1	51.022	GST06-3M □□□090C12	138
	28	358	2.0		34	294	2.4	51.022	GST07-3M □□□090C12	138
	27	378	0.9		32	311	1.1	53.900	GST06-3M □□□090C12	138
	27	378	1.9		32	311	2.3	53.900	GST07-3M □□□090C12	138
	25	401	1.7		31	329	2.1	56.250	GST07-2M □□□090C12	126
	25	401	2.7		31	329	3.3	56.250	GST09-2M □□□090C12	126
	22	457	1.5		27	375	1.9	65.079	GST07-3M □□□090C12	138
	20	492	1.4		25	405	1.7	70.156	GST07-3M □□□090C12	138
	20	505	2.9		24	415	3.6	71.867	GST09-3M □□□090C12	138
	18	560	1.3		22	460	1.5	79.762	GST07-3M □□□090C12	138
	18	573	2.8		21	471	3.4	81.667	GST09-3M □□□090C12	138
	17	604	1.2		20	496	1.4	85.983	GST07-3M □□□090C12	138
	15	657	2.5		19	540	3.0	93.541	GST09-3M □□□090C12	138
	15	686	1.0		18	564	1.3	97.708	GST07-3M □□□090C12	138



Selection tables

50 Hz, 60 Hz: P_N = 1.1 kW

n_N	1430 r/min				1740 r/min			i		
f_N	50 Hz				60 Hz					
	n_2 [r/min]	M_2 [Nm]	c		n_2 [r/min]	M_2 [Nm]	c			
	14	696	2.3		17	572	2.8	99.167	GST09-3M □□□090C12	138
	13	786	0.9		16	646	1.1	111.915	GST07-3M □□□090C12	138
	13	797	2.0		15	655	2.5	113.585	GST09-3M □□□090C12	138
	11	906	1.8		13	745	2.2	129.074	GST09-3M □□□090C12	138
	11	906	3.1		13	745	3.8	129.074	GST11-3M □□□090C12	138
	10	992	1.6		12	815	2.0	141.289	GST09-3M □□□090C12	138
	9.7	1032	2.6		12	848	3.2	146.993	GST11-3M □□□090C12	138
	9.0	1111	2.5		11	913	3.1	158.194	GST11-3M □□□090C12	138
	8.9	1127	1.4		11	926	1.8	160.556	GST09-3M □□□090C12	138
	7.9	1265	2.1		9.6	1039	2.6	180.156	GST11-3M □□□090C12	138
	7.8	1284	1.3		9.5	1055	1.5	182.844	GST09-3M □□□090C12	138
	6.9	1459	1.1		8.3	1199	1.4	207.778	GST09-3M □□□090C12	138
	6.9	1459	1.9		8.3	1199	2.3	207.778	GST11-3M □□□090C12	138
	6.0	1661	1.0		7.3	1365	1.2	236.622	GST09-3M □□□090C12	138
	6.0	1661	1.6		7.3	1365	2.0	236.622	GST11-3M □□□090C12	138
	5.7	1770	0.9		6.9	1455	1.1	252.167	GST09-3M □□□090C12	138
	5.7	1770	1.6		6.9	1455	1.9	252.167	GST11-3M □□□090C12	138
	5.3	1888	0.9		6.4	1551	1.0	268.889	GST09-3M □□□090C12	138
	5.3	1888	1.5		6.4	1551	1.8	268.889	GST11-3M □□□090C12	138
	5.3	1888	3.1		6.4	1551	3.8	268.889	GST14-3M □□□090C12	138
	4.4	2291	1.2		5.3	1883	1.5	326.333	GST11-3M □□□090C12	138
	4.4	2291	2.6		5.3	1883	3.1	326.333	GST14-3M □□□090C12	138
	3.9	2548	1.1		4.8	2094	1.3	363.000	GST11-3M □□□090C12	138
	3.9	2548	2.3		4.8	2094	2.8	363.000	GST14-3M □□□090C12	138
	3.5	2896	1.0		4.2	2380	1.2	412.500	GST11-3M □□□090C12	138
	3.5	2896	2.0		4.2	2380	2.5	412.500	GST14-3M □□□090C12	138



Selection tables

50 Hz, 60 Hz: P_N = 1.5 kW

n_N	1435 r/min				1745 r/min			i		
f_N	50 Hz				60 Hz					
	n_2 [r/min]	M_2 [Nm]	c		n_2 [r/min]	M_2 [Nm]	c			
	897	16	1.2		1084	13	1.4	1.600	GST04-1M □□□090C32	114
	897	16	2.8		1084	13	3.3	1.600	GST05-1M □□□090C32	114
	701	20	1.1		847	17	1.3	2.048	GST04-1M □□□090C32	114
	701	20	2.6		847	17	3.0	2.048	GST05-1M □□□090C32	114
	641	22	1.1		775	18	1.3	2.240	GST04-1M □□□090C32	114
	641	22	2.4		775	18	2.8	2.240	GST05-1M □□□090C32	114
	502	28	0.9		607	23	1.0	2.857	GST04-1M □□□090C32	114
	502	28	1.9		607	23	2.2	2.857	GST05-1M □□□090C32	114
	486	29	1.4		587	24	1.6	2.956	GST04-2M □□□090C32	126
	486	29	2.2		587	24	2.5	2.956	GST05-2M □□□090C32	126
	431	32	1.3		521	27	1.5	3.333	GST04-2M □□□090C32	126
	431	32	2.4		521	27	2.8	3.333	GST05-2M □□□090C32	126
	410	34	1.6		496	28	1.8	3.500	GST05-1M □□□090C32	114
	410	34	3.0		496	28	3.5	3.500	GST06-1M □□□090C32	114
	354	39	1.1		428	32	1.3	4.053	GST04-2M □□□090C32	126
	354	39	2.1		428	32	2.4	4.053	GST05-2M □□□090C32	126
	315	45	1.2		381	37	1.4	4.556	GST05-1M □□□090C32	114
	315	45	2.3		381	37	2.7	4.556	GST06-1M □□□090C32	114
	314	44	1.1		380	36	1.3	4.571	GST04-2M □□□090C32	126
	314	44	2.1		380	36	2.4	4.571	GST05-2M □□□090C32	126
	277	50	1.0		335	41	1.2	5.187	GST04-2M □□□090C32	126
	277	50	1.8		335	41	2.1	5.187	GST05-2M □□□090C32	126
	257	55	2.9		311	45	3.4	5.583	GST07-1M □□□090C32	114
	253	56	1.0		306	46	1.1	5.667	GST05-1M □□□090C32	114
	253	56	1.9		306	46	2.2	5.667	GST06-1M □□□090C32	114
	245	57	0.9		297	47	1.1	5.850	GST04-2M □□□090C32	126
	245	57	1.8		297	47	2.1	5.850	GST05-2M □□□090C32	126
	224	62	0.9		271	51	1.0	6.400	GST04-2M □□□090C32	126
	224	62	1.7		271	51	2.0	6.400	GST05-2M □□□090C32	126
	204	68	0.8		248	56	1.0	7.040	GST04-2M □□□090C32	126
	198	70	1.5		240	58	1.8	7.238	GST05-2M □□□090C32	126
	196	72	1.4		237	59	1.6	7.333	GST06-1M □□□090C32	114
	196	72	2.4		237	59	2.8	7.333	GST07-1M □□□090C32	114
	196	72	2.9		237	59	3.4	7.333	GST09-1M □□□090C32	114
	176	79	1.5		213	65	1.7	8.163	GST05-2M □□□090C32	126
	176	79	3.2		213	65	3.7	8.163	GST06-2M □□□090C32	126
	161	88	1.0		195	72	1.1	8.900	GST06-1M □□□090C32	114
	161	88	2.0		195	72	2.4	8.900	GST07-1M □□□090C32	114
	161	88	2.6		195	72	3.0	8.900	GST09-1M □□□090C32	114
	159	87	1.4		193	72	1.6	9.010	GST05-2M □□□090C32	126



Selection tables

50 Hz, 60 Hz: P_N = 1.5 kW

n_N	1435 r/min				1745 r/min			i		
f_N	50 Hz				60 Hz					
	n_2 [r/min]	M_2 [Nm]	c		n_2 [r/min]	M_2 [Nm]	c			
	159	87	3.0		193	72	3.5	9.010	GST06-2M □□□090C32	126
	144	97	1.3		174	80	1.5	10.000	GST05-2M □□□090C32	126
	144	97	2.8		174	80	3.2	10.000	GST06-2M □□□090C32	126
	128	108	1.2		155	89	1.4	11.200	GST05-2M □□□090C32	126
	128	108	2.6		155	89	3.0	11.200	GST06-2M □□□090C32	126
	128	111	1.2		154	91	1.4	11.250	GST07-1M □□□090C32	114
	128	111	2.0		154	91	2.3	11.250	GST09-1M □□□090C32	114
	114	122	2.4		138	100	2.8	12.571	GST06-2M □□□090C32	126
	110	126	1.1		133	104	1.3	13.016	GST05-2M □□□090C32	126
	100	138	2.2		121	114	2.6	14.286	GST06-2M □□□090C32	126
	100	139	1.0		121	114	1.2	14.356	GST05-2M □□□090C32	126
	93	149	2.1		113	123	2.6	15.400	GST06-2M □□□090C32	126
	89	157	0.9		107	129	1.2	16.190	GST05-2M □□□090C32	126
	82	169	0.8		99	139	1.0	17.500	GST05-2M □□□090C32	126
	82	169	1.8		99	139	2.2	17.500	GST06-2M □□□090C32	126
	72	194	0.8		87	160	1.0	20.044	GST05-2M □□□090C32	126
	72	194	1.8		87	160	2.2	20.044	GST06-2M □□□090C32	126
	63	221	1.4		76	181	1.7	22.778	GST06-2M □□□090C32	126
	63	221	3.1		76	181	3.8	22.778	GST07-2M □□□090C32	126
	58	238	2.9		71	196	3.6	24.567	GST07-2M □□□090C32	126
	58	241	1.5		70	199	1.8	24.933	GST06-2M □□□090C32	126
	51	270	2.6		62	222	3.1	27.917	GST07-2M □□□090C32	126
	51	274	1.2		61	226	1.4	28.333	GST06-2M □□□090C32	126
	45	312	1.2		54	257	1.4	32.267	GST06-2M □□□090C32	126
	45	312	2.3		54	257	2.7	32.267	GST07-2M □□□090C32	126
	45	312	2.9		54	257	3.6	32.267	GST09-2M □□□090C32	126
	39	355	0.9		47	292	1.1	36.667	GST06-2M □□□090C32	126
	39	355	2.0		47	292	2.4	36.667	GST07-2M □□□090C32	126
	39	355	2.9		47	292	3.6	36.667	GST09-2M □□□090C32	126
	37	379	1.0		44	312	1.2	39.160	GST06-2M □□□090C32	126
	37	379	1.9		44	312	2.3	39.160	GST07-2M □□□090C32	126
	37	379	2.6		44	312	3.1	39.160	GST09-2M □□□090C32	126
	37	374	0.9		44	308	1.0	39.200	GST06-3M □□□090C32	138
	37	374	1.8		44	308	2.2	39.200	GST07-3M □□□090C32	138
	33	413	3.1		40	339	3.8	43.267	GST09-3M □□□090C32	138
	33	420	1.7		39	345	2.0	44.000	GST07-3M □□□090C32	138
	32	431	1.6		39	354	2.0	44.500	GST07-2M □□□090C32	126
	32	431	2.6		39	354	3.1	44.500	GST09-2M □□□090C32	126
	29	469	3.1		35	386	3.8	49.167	GST09-3M □□□090C32	138
	29	479	1.3		35	394	1.5	49.500	GST07-2M □□□090C32	126



Selection tables

50 Hz, 60 Hz: P_N = 1.5 kW

n_N	1435 r/min				1745 r/min			i		
f_N	50 Hz				60 Hz					
	n_2 [r/min]	M_2 [Nm]	c		n_2 [r/min]	M_2 [Nm]	c			
	29	479	2.0		35	394	2.4	49.500	GST09-2M □□□090C32	126
	28	487	1.4		34	400	1.7	51.022	GST07-3M □□□090C32	138
	27	506	2.7		33	416	3.3	53.044	GST09-3M □□□090C32	138
	27	514	1.4		32	423	1.7	53.900	GST07-3M □□□090C32	138
	26	545	1.3		31	448	1.5	56.250	GST07-2M □□□090C32	126
	26	545	2.0		31	448	2.4	56.250	GST09-2M □□□090C32	126
	24	575	2.7		29	473	3.3	60.278	GST09-3M □□□090C32	138
	22	621	1.1		27	511	1.4	65.079	GST07-3M □□□090C32	138
	21	669	1.1		25	550	1.3	70.156	GST07-3M □□□090C32	138
	20	686	2.2		24	564	2.6	71.867	GST09-3M □□□090C32	138
	18	761	0.9		22	626	1.1	79.762	GST07-3M □□□090C32	138
	18	779	2.0		21	641	2.5	81.667	GST09-3M □□□090C32	138
	17	820	0.9		20	675	1.0	85.983	GST07-3M □□□090C32	138
	15	892	1.8		19	734	2.2	93.541	GST09-3M □□□090C32	138
	15	946	1.7		18	778	2.1	99.167	GST09-3M □□□090C32	138
	13	1084	1.5		15	891	1.8	113.585	GST09-3M □□□090C32	138
	11	1231	1.3		13	1013	1.6	129.074	GST09-3M □□□090C32	138
	11	1231	2.3		13	1013	2.8	129.074	GST11-3M □□□090C32	138
	10	1348	1.2		12	1108	1.5	141.289	GST09-3M □□□090C32	138
	9.8	1402	1.9		12	1153	2.3	146.993	GST11-3M □□□090C32	138
	9.1	1509	1.9		11	1241	2.3	158.194	GST11-3M □□□090C32	138
	8.9	1532	1.1		11	1260	1.3	160.556	GST09-3M □□□090C32	138
	8.0	1719	1.6		9.6	1413	1.9	180.156	GST11-3M □□□090C32	138
	7.9	1744	0.9		9.5	1434	1.1	182.844	GST09-3M □□□090C32	138
	7.0	1953	2.9		8.5	1606	3.6	204.722	GST14-3M □□□090C32	138
	6.9	1982	0.8		8.4	1630	1.0	207.778	GST09-3M □□□090C32	138
	6.9	1982	1.4		8.4	1630	1.7	207.778	GST11-3M □□□090C32	138
	6.1	2257	1.2		7.3	1856	1.5	236.622	GST11-3M □□□090C32	138
	6.1	2257	2.6		7.3	1856	3.1	236.622	GST14-3M □□□090C32	138
	5.8	2370	2.5		7.0	1949	3.0	248.458	GST14-3M □□□090C32	138
	5.7	2406	1.2		6.9	1978	1.4	252.167	GST11-3M □□□090C32	138
	5.3	2565	1.1		6.5	2109	1.4	268.889	GST11-3M □□□090C32	138
	5.3	2565	2.3		6.5	2109	2.8	268.889	GST14-3M □□□090C32	138
	4.4	3113	0.9		5.3	2560	1.1	326.333	GST11-3M □□□090C32	138
	4.4	3113	1.9		5.3	2560	2.3	326.333	GST14-3M □□□090C32	138
	4.0	3463	1.7		4.8	2848	2.0	363.000	GST14-3M □□□090C32	138
	3.5	3935	1.5		4.2	3236	1.8	412.500	GST14-3M □□□090C32	138



Selection tables

50 Hz, 60 Hz: P_N = 2.2 kW

n_N	1445 r/min				1750 r/min			i		
f_N	50 Hz				60 Hz					
	n_2 [r/min]	M_2 [Nm]	c		n_2 [r/min]	M_2 [Nm]	c			
	903	23	2.0		1091	19	2.2	1.600	GST05-1M □□□100C12	114
	903	23	2.7		1091	19	3.1	1.600	GST06-1M □□□100C12	114
	706	29	1.8		852	24	2.1	2.048	GST05-1M □□□100C12	114
	706	29	2.5		852	24	2.8	2.048	GST06-1M □□□100C12	114
	645	32	1.7		779	26	1.9	2.240	GST05-1M □□□100C12	114
	645	32	2.4		779	26	2.8	2.240	GST06-1M □□□100C12	114
	506	41	1.3		611	34	1.5	2.857	GST05-1M □□□100C12	114
	506	41	2.3		611	34	2.6	2.857	GST06-1M □□□100C12	114
	489	42	1.5		590	34	1.7	2.956	GST05-2M □□□100C12	126
	434	47	1.7		524	39	1.9	3.333	GST05-2M □□□100C12	126
	413	50	1.1		499	41	1.2	3.500	GST05-1M □□□100C12	114
	413	50	2.1		499	41	2.4	3.500	GST06-1M □□□100C12	114
	357	57	1.4		431	47	1.6	4.053	GST05-2M □□□100C12	126
	317	65	1.6		383	54	1.9	4.556	GST06-1M □□□100C12	114
	317	65	2.9		383	54	3.3	4.556	GST07-1M □□□100C12	114
	316	64	1.4		382	53	1.6	4.571	GST05-2M □□□100C12	126
	316	64	3.1		382	53	3.6	4.571	GST06-2M □□□100C12	126
	279	73	1.2		336	60	1.4	5.187	GST05-2M □□□100C12	126
	271	75	2.8		328	62	3.2	5.324	GST06-2M □□□100C12	126
	259	80	2.5		313	66	2.8	5.583	GST07-1M □□□100C12	114
	255	81	1.3		308	67	1.5	5.667	GST06-1M □□□100C12	114
	247	83	1.2		298	68	1.4	5.850	GST05-2M □□□100C12	126
	247	83	2.7		298	68	3.1	5.850	GST06-2M □□□100C12	126
	226	90	1.2		273	75	1.3	6.400	GST05-2M □□□100C12	126
	226	90	2.5		273	75	2.9	6.400	GST06-2M □□□100C12	126
	205	99	2.4		248	82	2.7	7.040	GST06-2M □□□100C12	126
	200	102	1.1		241	84	1.2	7.238	GST05-2M □□□100C12	126
	197	105	1.9		238	87	2.1	7.333	GST07-1M □□□100C12	114
	197	105	2.8		238	87	3.2	7.333	GST09-1M □□□100C12	114
	177	115	1.0		214	95	1.1	8.163	GST05-2M □□□100C12	126
	177	115	2.2		214	95	2.5	8.163	GST06-2M □□□100C12	126
	162	127	1.4		196	105	1.7	8.900	GST07-1M □□□100C12	114
	162	127	2.3		196	105	2.7	8.900	GST09-1M □□□100C12	114
	160	127	0.9		194	105	1.1	9.010	GST05-2M □□□100C12	126
	160	127	2.1		194	105	2.4	9.010	GST06-2M □□□100C12	126
	145	141	0.9		175	116	1.0	10.000	GST05-2M □□□100C12	126
	145	141	1.9		175	116	2.2	10.000	GST06-2M □□□100C12	126
	129	158	0.8		156	130	0.9	11.200	GST05-2M □□□100C12	126
	129	158	1.8		156	130	2.0	11.200	GST06-2M □□□100C12	126
	128	161	1.8		155	133	2.1	11.250	GST09-1M □□□100C12	114



Selection tables

50 Hz, 60 Hz: P_N = 2.2 kW

n_N	1445 r/min				1750 r/min			i		
f_N	50 Hz				60 Hz					
	n_2 [r/min]	M_2 [Nm]	c		n_2 [r/min]	M_2 [Nm]	c			
	115	177	1.7		139	146	1.9	12.571	GST06-2M □□□100C12	126
	101	202	1.5		122	166	1.8	14.286	GST06-2M □□□100C12	126
	101	202	3.2		122	166	3.7	14.286	GST07-2M □□□100C12	126
	94	217	1.5		113	179	1.8	15.400	GST06-2M □□□100C12	126
	94	217	3.0		113	179	3.6	15.400	GST07-2M □□□100C12	126
	83	247	1.3		100	204	1.5	17.500	GST06-2M □□□100C12	126
	83	247	2.8		100	204	3.3	17.500	GST07-2M □□□100C12	126
	72	283	1.2		87	233	1.5	20.044	GST06-2M □□□100C12	126
	72	283	2.5		87	233	3.0	20.044	GST07-2M □□□100C12	126
	63	321	1.0		77	265	1.2	22.778	GST06-2M □□□100C12	126
	63	321	2.1		77	265	2.6	22.778	GST07-2M □□□100C12	126
	59	347	2.0		71	286	2.5	24.567	GST07-2M □□□100C12	126
	58	352	1.0		70	290	1.2	24.933	GST06-2M □□□100C12	126
	52	394	1.8		63	325	2.1	27.917	GST07-2M □□□100C12	126
	45	455	1.6		54	376	1.9	32.267	GST07-2M □□□100C12	126
	45	455	2.8		54	376	3.4	32.267	GST09-2M □□□100C12	126
	39	517	1.4		48	427	1.6	36.667	GST07-2M □□□100C12	126
	39	517	2.8		48	427	3.4	36.667	GST09-2M □□□100C12	126
	37	552	1.3		45	456	1.5	39.160	GST07-2M □□□100C12	126
	37	552	2.3		45	456	2.8	39.160	GST09-2M □□□100C12	126
	37	552	2.9		45	456	3.5	39.160	GST11-2M □□□100C12	126
	37	545	1.3		45	450	1.5	39.200	GST07-3M □□□100C12	138
	36	558	2.4		44	460	2.9	40.136	GST09-3M □□□100C12	138
	33	601	2.1		40	496	2.6	43.267	GST09-3M □□□100C12	138
	33	611	1.2		40	505	1.4	44.000	GST07-3M □□□100C12	138
	33	628	1.1		39	518	1.4	44.500	GST07-2M □□□100C12	126
	33	628	2.3		39	518	2.8	44.500	GST09-2M □□□100C12	126
	33	628	2.9		39	518	3.5	44.500	GST11-2M □□□100C12	126
	29	683	2.1		36	564	2.6	49.167	GST09-3M □□□100C12	138
	29	698	1.8		35	577	2.2	49.500	GST09-2M □□□100C12	126
	29	698	2.3		35	577	2.8	49.500	GST11-2M □□□100C12	126
	28	709	1.0		34	585	1.2	51.022	GST07-3M □□□100C12	138
	27	737	1.9		33	609	2.3	53.044	GST09-3M □□□100C12	138
	27	749	0.9		32	618	1.1	53.900	GST07-3M □□□100C12	138
	26	793	1.8		31	655	2.2	56.250	GST09-2M □□□100C12	126
	26	793	2.3		31	655	2.8	56.250	GST11-2M □□□100C12	126
	25	805	3.2		30	665	3.9	57.968	GST11-3M □□□100C12	138
	24	838	1.9		29	692	2.3	60.278	GST09-3M □□□100C12	138
	24	851	3.2		29	703	3.9	61.250	GST11-3M □□□100C12	138
	20	987	2.7		25	815	3.2	71.011	GST11-3M □□□100C12	138



Selection tables

50 Hz, 60 Hz: P_N = 2.2 kW

n_N	1445 r/min				1750 r/min			i		
f_N	50 Hz				60 Hz					
	n_2 [r/min]	M_2 [Nm]	c		n_2 [r/min]	M_2 [Nm]	c			
	20	999	1.5		24	825	1.8	71.867	GST09-3M □□□100C12	138
	18	1121	2.5		22	926	3.0	80.694	GST11-3M □□□100C12	138
	18	1135	1.4		21	937	1.7	81.667	GST09-3M □□□100C12	138
	17	1213	2.2		20	1001	2.7	87.267	GST11-3M □□□100C12	138
	15	1300	1.2		19	1073	1.5	93.541	GST09-3M □□□100C12	138
	15	1378	1.2		18	1138	1.4	99.167	GST09-3M □□□100C12	138
	15	1378	2.0		18	1138	2.5	99.167	GST11-3M □□□100C12	138
	13	1569	1.7		16	1296	2.1	112.933	GST11-3M □□□100C12	138
	13	1578	1.0		15	1303	1.2	113.585	GST09-3M □□□100C12	138
	11	1793	0.9		14	1481	1.1	129.074	GST09-3M □□□100C12	138
	11	1793	1.6		14	1481	1.9	129.074	GST11-3M □□□100C12	138
	10	1934	3.0		13	1597	3.6	139.211	GST14-3M □□□100C12	138
	10	1963	0.8		12	1621	1.0	141.289	GST09-3M □□□100C12	138
	9.8	2042	1.3		12	1686	1.6	146.993	GST11-3M □□□100C12	138
	9.1	2198	1.3		11	1815	1.5	158.194	GST11-3M □□□100C12	138
	9.1	2198	2.7		11	1815	3.3	158.194	GST14-3M □□□100C12	138
	8.4	2377	2.5		10	1963	3.0	171.111	GST14-3M □□□100C12	138
	8.0	2503	1.1		9.7	2067	1.3	180.156	GST11-3M □□□100C12	138
	7.1	2844	2.1		8.5	2349	2.5	204.722	GST14-3M □□□100C12	138
	7.0	2887	1.0		8.4	2384	1.2	207.778	GST11-3M □□□100C12	138
	6.1	3288	0.8		7.4	2715	1.0	236.622	GST11-3M □□□100C12	138
	6.1	3288	1.8		7.4	2715	2.1	236.622	GST14-3M □□□100C12	138
	5.8	3452	1.7		7.0	2850	2.1	248.458	GST14-3M □□□100C12	138
	5.7	3504	0.8		6.9	2893	1.0	252.167	GST11-3M □□□100C12	138
	5.4	3736	1.6		6.5	3085	1.9	268.889	GST14-3M □□□100C12	138
	4.4	4534	1.3		5.4	3744	1.6	326.333	GST14-3M □□□100C12	138
	4.0	5044	1.1		4.8	4165	1.4	363.000	GST14-3M □□□100C12	138
	3.5	5731	1.0		4.2	4732	1.3	412.500	GST14-3M □□□100C12	138



Selection tables

50 Hz, 60 Hz: P_N = 3.0 kW

n_N	1445 r/min				1755 r/min			i		
f_N	50 Hz				60 Hz					
	n_2 [r/min]	M_2 [Nm]	c		n_2 [r/min]	M_2 [Nm]	c			
	903	31	1.4		1091	26	1.6	1.600	GST05-1M □□□100C32	114
	903	31	2.0		1091	26	2.3	1.600	GST06-1M □□□100C32	114
	723	39	3.2		873	32	3.7	2.000	GST07-1M □□□100C32	114
	706	40	1.3		852	33	1.5	2.048	GST05-1M □□□100C32	114
	706	40	1.8		852	33	2.1	2.048	GST06-1M □□□100C32	114
	645	44	1.2		779	36	1.4	2.240	GST05-1M □□□100C32	114
	645	44	1.8		779	36	2.1	2.240	GST06-1M □□□100C32	114
	645	44	3.1		779	36	3.5	2.240	GST07-1M □□□100C32	114
	506	56	0.9		611	46	1.1	2.857	GST05-1M □□□100C32	114
	506	56	1.7		611	46	1.9	2.857	GST06-1M □□□100C32	114
	506	56	2.8		611	46	3.3	2.857	GST07-1M □□□100C32	114
	489	57	1.1		590	47	1.3	2.956	GST05-2M □□□100C32	126
	476	58	2.9		575	48	3.3	3.033	GST06-2M □□□100C32	126
	434	64	1.2		524	53	1.4	3.333	GST05-2M □□□100C32	126
	434	64	2.7		524	53	3.1	3.333	GST06-2M □□□100C32	126
	413	68	1.5		499	56	1.8	3.500	GST06-1M □□□100C32	114
	413	68	2.5		499	56	2.9	3.500	GST07-1M □□□100C32	114
	357	78	1.0		431	64	1.2	4.053	GST05-2M □□□100C32	126
	347	80	2.4		420	66	2.8	4.160	GST06-2M □□□100C32	126
	317	89	1.2		383	73	1.4	4.556	GST06-1M □□□100C32	114
	317	89	2.1		383	73	2.4	4.556	GST07-1M □□□100C32	114
	316	88	1.0		382	72	1.2	4.571	GST05-2M □□□100C32	126
	316	88	2.3		382	72	2.6	4.571	GST06-2M □□□100C32	126
	310	91	3.0		374	75	3.4	4.667	GST09-1M □□□100C32	114
	279	100	0.9		336	82	1.0	5.187	GST05-2M □□□100C32	126
	271	102	2.0		328	84	2.3	5.324	GST06-2M □□□100C32	126
	259	109	1.8		313	90	2.1	5.583	GST07-1M □□□100C32	114
	255	111	0.9		308	91	1.1	5.667	GST06-1M □□□100C32	114
	255	111	2.5		308	91	2.9	5.667	GST09-1M □□□100C32	114
	247	113	0.9		298	93	1.0	5.850	GST05-2M □□□100C32	126
	247	113	2.0		298	93	2.3	5.850	GST06-2M □□□100C32	126
	226	123	0.9		273	101	1.0	6.400	GST05-2M □□□100C32	126
	226	123	1.9		273	101	2.1	6.400	GST06-2M □□□100C32	126
	205	135	1.7		248	111	2.0	7.040	GST06-2M □□□100C32	126
	197	143	1.4		238	118	1.6	7.333	GST07-1M □□□100C32	114
	197	143	2.0		238	118	2.3	7.333	GST09-1M □□□100C32	114
	177	157	1.6		214	129	1.8	8.163	GST06-2M □□□100C32	126
	164	169	3.1		198	139	3.6	8.800	GST07-2M □□□100C32	126
	162	174	1.1		196	143	1.2	8.900	GST07-1M □□□100C32	114
	162	174	1.7		196	143	2.0	8.900	GST09-1M □□□100C32	114



Selection tables

50 Hz, 60 Hz: P_N = 3.0 kW

n_N	1445 r/min				1755 r/min			i		
f_N	50 Hz				60 Hz					
	n_2 [r/min]	M_2 [Nm]	c		n_2 [r/min]	M_2 [Nm]	c			
	160	173	1.5		194	143	1.7	9.010	GST06-2M □□□100C32	126
	147	190	2.9		177	156	3.3	9.856	GST07-2M □□□100C32	126
	145	192	1.4		175	158	1.6	10.000	GST06-2M □□□100C32	126
	129	215	1.3		156	177	1.5	11.200	GST06-2M □□□100C32	126
	129	215	2.8		156	177	3.2	11.200	GST07-2M □□□100C32	126
	128	220	1.3		155	181	1.5	11.250	GST09-1M □□□100C32	114
	115	242	1.2		139	199	1.4	12.571	GST06-2M □□□100C32	126
	115	242	2.5		139	199	2.9	12.571	GST07-2M □□□100C32	126
	101	275	1.1		122	226	1.3	14.286	GST06-2M □□□100C32	126
	101	275	2.3		122	226	2.7	14.286	GST07-2M □□□100C32	126
	94	296	1.1		113	244	1.3	15.400	GST06-2M □□□100C32	126
	94	296	2.2		113	244	2.6	15.400	GST07-2M □□□100C32	126
	83	337	0.9		100	277	1.1	17.500	GST06-2M □□□100C32	126
	83	337	2.0		100	277	2.5	17.500	GST07-2M □□□100C32	126
	72	386	0.9		87	317	1.1	20.044	GST06-2M □□□100C32	126
	72	386	1.8		87	317	2.2	20.044	GST07-2M □□□100C32	126
	70	395	3.0		85	325	3.6	20.533	GST09-2M □□□100C32	126
	63	438	1.6		77	361	1.9	22.778	GST07-2M □□□100C32	126
	62	449	3.0		75	370	3.6	23.333	GST09-2M □□□100C32	126
	59	473	1.5		71	389	1.8	24.567	GST07-2M □□□100C32	126
	58	480	2.5		70	395	3.1	24.933	GST09-2M □□□100C32	126
	52	537	1.3		63	442	1.6	27.917	GST07-2M □□□100C32	126
	51	545	2.5		62	449	3.1	28.333	GST09-2M □□□100C32	126
	45	621	1.1		54	511	1.4	32.267	GST07-2M □□□100C32	126
	45	621	2.0		54	511	2.5	32.267	GST09-2M □□□100C32	126
	45	621	2.5		54	511	3.1	32.267	GST11-2M □□□100C32	126
	39	705	1.0		48	581	1.2	36.667	GST07-2M □□□100C32	126
	39	705	2.0		48	581	2.5	36.667	GST09-2M □□□100C32	126
	39	705	2.5		48	581	3.1	36.667	GST11-2M □□□100C32	126
	37	753	0.9		45	620	1.1	39.160	GST07-2M □□□100C32	126
	37	753	1.7		45	620	2.1	39.160	GST09-2M □□□100C32	126
	37	753	2.1		45	620	2.6	39.160	GST11-2M □□□100C32	126
	37	743	0.9		45	612	1.1	39.200	GST07-3M □□□100C32	138
	36	760	1.8		44	626	2.1	40.136	GST09-3M □□□100C32	138
	33	820	1.6		40	675	1.9	43.267	GST09-3M □□□100C32	138
	33	834	0.8		40	686	1.0	44.000	GST07-3M □□□100C32	138
	33	834	2.9		40	686	3.5	44.000	GST11-3M □□□100C32	138
	33	856	0.8		39	705	1.0	44.500	GST07-2M □□□100C32	126
	33	856	1.7		39	705	2.1	44.500	GST09-2M □□□100C32	126
	33	856	2.1		39	705	2.6	44.500	GST11-2M □□□100C32	126



Selection tables

50 Hz, 60 Hz: P_N = 3.0 kW

n_N	1445 r/min				1755 r/min			i		
f_N	50 Hz				60 Hz					
	n_2 [r/min]	M_2 [Nm]	c		n_2 [r/min]	M_2 [Nm]	c			
	29	932	1.6		36	767	1.9	49.167	GST09-3M □□□100C32	138
	29	952	1.3		35	784	1.6	49.500	GST09-2M □□□100C32	126
	29	952	1.7		35	784	2.1	49.500	GST11-2M □□□100C32	126
	29	947	2.9		35	780	3.5	50.000	GST11-3M □□□100C32	138
	27	1005	1.4		33	827	1.7	53.044	GST09-3M □□□100C32	138
	26	1082	1.3		31	891	1.6	56.250	GST09-2M □□□100C32	126
	26	1082	1.7		31	891	2.1	56.250	GST11-2M □□□100C32	126
	25	1098	2.3		30	904	2.8	57.968	GST11-3M □□□100C32	138
	24	1142	1.4		29	940	1.7	60.278	GST09-3M □□□100C32	138
	24	1160	2.3		29	955	2.9	61.250	GST11-3M □□□100C32	138
	20	1345	2.0		25	1108	2.4	71.011	GST11-3M □□□100C32	138
	20	1362	1.1		24	1121	1.3	71.867	GST09-3M □□□100C32	138
	18	1529	1.8		22	1259	2.2	80.694	GST11-3M □□□100C32	138
	18	1547	1.0		21	1274	1.2	81.667	GST09-3M □□□100C32	138
	17	1653	1.6		20	1361	2.0	87.267	GST11-3M □□□100C32	138
	15	1772	0.9		19	1459	1.1	93.541	GST09-3M □□□100C32	138
	15	1772	3.0		19	1459	3.6	93.541	GST14-3M □□□100C32	138
	15	1879	0.8		18	1547	1.0	99.167	GST09-3M □□□100C32	138
	15	1879	1.5		18	1547	1.8	99.167	GST11-3M □□□100C32	138
	14	2014	2.9		16	1658	3.6	106.296	GST14-3M □□□100C32	138
	13	2140	1.3		16	1762	1.5	112.933	GST11-3M □□□100C32	138
	11	2446	1.1		14	2014	1.4	129.074	GST11-3M □□□100C32	138
	11	2468	2.4		13	2032	2.9	130.278	GST14-3M □□□100C32	138
	10	2638	2.2		13	2172	2.6	139.211	GST14-3M □□□100C32	138
	9.8	2785	1.0		12	2293	1.2	146.993	GST11-3M □□□100C32	138
	9.1	2997	0.9		11	2468	1.1	158.194	GST11-3M □□□100C32	138
	9.1	2997	2.0		11	2468	2.4	158.194	GST14-3M □□□100C32	138
	8.4	3242	1.8		10	2669	2.2	171.111	GST14-3M □□□100C32	138
	7.1	3879	1.5		8.5	3194	1.9	204.722	GST14-3M □□□100C32	138
	6.1	4483	1.3		7.4	3691	1.6	236.622	GST14-3M □□□100C32	138
	5.8	4707	1.3		7.0	3876	1.5	248.458	GST14-3M □□□100C32	138
	5.4	5095	1.2		6.5	4195	1.4	268.889	GST14-3M □□□100C32	138
	4.4	6183	1.0		5.4	5091	1.2	326.333	GST14-3M □□□100C32	138
	4.0	6878	0.8		4.8	5663	1.0	363.000	GST14-3M □□□100C32	138



Selection tables

50 Hz, 60 Hz: P_N = 4.0 kW

n_N	1455 r/min				1760 r/min			i		
f_N	50 Hz				60 Hz					
	n_2 [r/min]	M_2 [Nm]	c		n_2 [r/min]	M_2 [Nm]	c			
	909	41	1.5		1097	34	1.7	1.600	GST06-1M □□□112C22	114
	895	42	2.5		1080	35	2.9	1.625	GST07-1M □□□112C22	114
	728	52	2.4		878	43	2.7	2.000	GST07-1M □□□112C22	114
	711	53	1.4		857	44	1.6	2.048	GST06-1M □□□112C22	114
	650	58	1.4		784	48	1.6	2.240	GST06-1M □□□112C22	114
	650	58	2.3		784	48	2.7	2.240	GST07-1M □□□112C22	114
	509	74	1.3		614	61	1.4	2.857	GST06-1M □□□112C22	114
	509	74	2.1		614	61	2.5	2.857	GST07-1M □□□112C22	114
	480	77	2.2		579	64	2.5	3.033	GST06-2M □□□112C22	126
	437	85	2.0		527	70	2.4	3.333	GST06-2M □□□112C22	126
	416	91	1.2		501	75	1.3	3.500	GST06-1M □□□112C22	114
	416	91	1.9		501	75	2.2	3.500	GST07-1M □□□112C22	114
	350	106	1.8		422	88	2.1	4.160	GST06-2M □□□112C22	126
	319	118	1.6		385	97	1.8	4.556	GST07-1M □□□112C22	114
	318	116	1.7		384	96	2.0	4.571	GST06-2M □□□112C22	126
	312	121	2.6		376	100	2.9	4.667	GST09-1M □□□112C22	114
	280	132	3.2		338	109	3.7	5.200	GST07-2M □□□112C22	126
	273	136	1.5		330	112	1.8	5.324	GST06-2M □□□112C22	126
	261	144	1.4		314	119	1.6	5.583	GST07-1M □□□112C22	114
	257	147	2.2		310	121	2.5	5.667	GST09-1M □□□112C22	114
	255	146	3.1		307	120	3.5	5.714	GST07-2M □□□112C22	126
	249	149	1.5		300	123	1.7	5.850	GST06-2M □□□112C22	126
	227	163	1.4		274	135	1.6	6.400	GST06-2M □□□112C22	126
	227	163	2.8		274	135	3.3	6.400	GST07-2M □□□112C22	126
	207	179	1.3		249	148	1.5	7.040	GST06-2M □□□112C22	126
	204	182	2.7		246	151	3.1	7.150	GST07-2M □□□112C22	126
	198	190	1.8		239	157	2.0	7.333	GST09-1M □□□112C22	114
	179	207	2.6		216	171	3.0	8.125	GST07-2M □□□112C22	126
	178	208	1.2		215	172	1.4	8.163	GST06-2M □□□112C22	126
	165	224	2.4		199	185	2.7	8.800	GST07-2M □□□112C22	126
	164	230	1.5		197	190	1.7	8.900	GST09-1M □□□112C22	114
	162	229	1.1		195	190	1.3	9.010	GST06-2M □□□112C22	126
	148	251	2.2		178	208	2.5	9.856	GST07-2M □□□112C22	126
	146	255	1.1		176	211	1.2	10.000	GST06-2M □□□112C22	126
	130	285	1.0		157	236	1.1	11.200	GST06-2M □□□112C22	126
	130	285	2.1		157	236	2.4	11.200	GST07-2M □□□112C22	126
	116	320	0.9		140	265	1.1	12.571	GST06-2M □□□112C22	126
	116	320	1.9		140	265	2.2	12.571	GST07-2M □□□112C22	126
	102	364	0.8		123	301	1.0	14.286	GST06-2M □□□112C22	126
	102	364	1.8		123	301	2.0	14.286	GST07-2M □□□112C22	126



Selection tables

50 Hz, 60 Hz: P_N = 4.0 kW

n_N	1455 r/min				1760 r/min			i		
f_N	50 Hz				60 Hz					
	n_2 [r/min]	M_2 [Nm]	c		n_2 [r/min]	M_2 [Nm]	c			
	95	392	0.8		114	324	1.0	15.400	GST06-2M □□□112C22	126
	95	392	1.6		114	324	2.0	15.400	GST07-2M □□□112C22	126
	85	439	3.1		102	363	3.8	17.222	GST09-2M □□□112C22	126
	83	446	1.5		100	368	1.8	17.500	GST07-2M □□□112C22	126
	73	511	1.4		88	422	1.6	20.044	GST07-2M □□□112C22	126
	71	523	2.6		86	432	3.1	20.533	GST09-2M □□□112C22	126
	64	580	1.2		77	480	1.4	22.778	GST07-2M □□□112C22	126
	62	594	2.5		75	491	3.1	23.333	GST09-2M □□□112C22	126
	59	626	1.1		71	517	1.4	24.567	GST07-2M □□□112C22	126
	58	635	2.2		70	525	2.6	24.933	GST09-2M □□□112C22	126
	58	635	2.7		70	525	3.3	24.933	GST11-2M □□□112C22	126
	52	711	1.0		63	588	1.2	27.917	GST07-2M □□□112C22	126
	51	722	2.1		62	597	2.5	28.333	GST09-2M □□□112C22	126
	51	722	2.7		62	597	3.3	28.333	GST11-2M □□□112C22	126
	45	822	1.7		54	679	2.1	32.267	GST09-2M □□□112C22	126
	45	822	2.2		54	679	2.6	32.267	GST11-2M □□□112C22	126
	45	822	2.7		54	679	3.3	32.267	GST14-2M □□□112C22	126
	40	934	1.6		48	772	2.0	36.667	GST09-2M □□□112C22	126
	40	934	2.2		48	772	2.6	36.667	GST11-2M □□□112C22	126
	40	934	2.7		48	772	3.3	36.667	GST14-2M □□□112C22	126
	37	997	1.5		45	825	1.8	39.160	GST09-2M □□□112C22	126
	37	997	1.8		45	825	2.2	39.160	GST11-2M □□□112C22	126
	37	997	2.3		45	825	2.7	39.160	GST14-2M □□□112C22	126
	36	1007	1.3		44	832	1.6	40.136	GST09-3M □□□112C22	138
	36	1024	2.5		43	847	3.0	40.816	GST11-3M □□□112C22	138
	34	1086	1.2		41	897	1.4	43.267	GST09-3M □□□112C22	138
	33	1104	2.2		40	913	2.6	44.000	GST11-3M □□□112C22	138
	33	1133	1.4		39	937	1.7	44.500	GST09-2M □□□112C22	126
	33	1133	1.8		39	937	2.2	44.500	GST11-2M □□□112C22	126
	33	1133	2.3		39	937	2.7	44.500	GST14-2M □□□112C22	126
	30	1234	1.2		36	1020	1.4	49.167	GST09-3M □□□112C22	138
	29	1261	1.5		36	1042	1.8	49.500	GST11-2M □□□112C22	126
	29	1261	1.8		36	1042	2.2	49.500	GST14-2M □□□112C22	126
	29	1254	2.2		35	1037	2.6	50.000	GST11-3M □□□112C22	138
	27	1331	1.0		33	1100	1.3	53.044	GST09-3M □□□112C22	138
	26	1433	1.5		31	1184	1.8	56.250	GST11-2M □□□112C22	126
	26	1433	1.8		31	1184	2.2	56.250	GST14-2M □□□112C22	126
	25	1454	1.8		30	1202	2.1	57.968	GST11-3M □□□112C22	138
	24	1512	1.0		29	1250	1.3	60.278	GST09-3M □□□112C22	138
	24	1537	1.8		29	1270	2.1	61.250	GST11-3M □□□112C22	138



Selection tables

50 Hz, 60 Hz: P_N = 4.0 kW

n_N	1455 r/min				1760 r/min			i		
f_N	50 Hz				60 Hz					
	n_2 [r/min]	M_2 [Nm]	c		n_2 [r/min]	M_2 [Nm]	c			
	21	1732	2.8		25	1432	3.4	69.042	GST14-3M □□□112C22	138
	21	1782	1.5		25	1473	1.8	71.011	GST11-3M □□□112C22	138
	20	1803	0.8		24	1491	1.0	71.867	GST09-3M □□□112C22	138
	19	1968	2.8		22	1627	3.4	78.457	GST14-3M □□□112C22	138
	18	2025	1.4		22	1674	1.7	80.694	GST11-3M □□□112C22	138
	17	2189	1.2		20	1810	1.5	87.267	GST11-3M □□□112C22	138
	16	2347	2.4		19	1940	2.8	93.541	GST14-3M □□□112C22	138
	15	2412	2.4		18	1994	2.9	96.157	GST14-3M □□□112C22	138
	15	2488	1.1		18	2057	1.4	99.167	GST11-3M □□□112C22	138
	14	2667	2.2		17	2205	2.7	106.296	GST14-3M □□□112C22	138
	13	2833	1.0		16	2342	1.2	112.933	GST11-3M □□□112C22	138
	11	3238	0.9		14	2677	1.0	129.074	GST11-3M □□□112C22	138
	11	3268	1.8		14	2702	2.2	130.278	GST14-3M □□□112C22	138
	11	3493	1.6		13	2887	2.0	139.211	GST14-3M □□□112C22	138
	9.2	3969	1.5		11	3281	1.8	158.194	GST14-3M □□□112C22	138
	8.5	4293	1.4		10	3549	1.7	171.111	GST14-3M □□□112C22	138
	7.1	5136	1.2		8.6	4246	1.4	204.722	GST14-3M □□□112C22	138
	6.2	5937	1.0		7.4	4908	1.2	236.622	GST14-3M □□□112C22	138
	5.9	6233	0.9		7.1	5153	1.1	248.458	GST14-3M □□□112C22	138
	5.4	6746	0.9		6.5	5577	1.1	268.889	GST14-3M □□□112C22	138



Selection tables

50 Hz, 60 Hz: P_N = 5.5 kW

n_N	1470 r/min				1775 r/min			i		
f_N	50 Hz				60 Hz					
	n_2 [r/min]	M_2 [Nm]	c		n_2 [r/min]	M_2 [Nm]	c			
	905	57	1.9		1089	47	2.1	1.625	GST07-1M □□□132C12	114
	735	70	1.8		885	58	2.0	2.000	GST07-1M □□□132C12	114
	656	79	1.7		790	65	1.9	2.240	GST07-1M □□□132C12	114
	515	101	1.6		620	83	1.8	2.857	GST07-1M □□□132C12	114
	485	105	1.6		584	87	1.8	3.033	GST06-2M□□□132C12	126
	441	116	1.5		531	96	1.7	3.333	GST06-2M□□□132C12	126
	439	116	3.2		528	96	3.6	3.350	GST07-2M □□□132C12	126
	420	123	1.4		506	102	1.6	3.500	GST07-1M □□□132C12	114
	353	144	1.3		426	119	1.5	4.160	GST06-2M□□□132C12	126
	348	146	2.7		419	121	3.1	4.225	GST07-2M □□□132C12	126
	323	160	1.2		390	133	1.3	4.556	GST07-1M □□□132C12	114
	322	158	1.3		387	131	1.4	4.571	GST06-2M□□□132C12	126
	317	161	2.6		381	133	2.9	4.643	GST07-2M □□□132C12	126
	315	164	2.3		379	136	2.6	4.667	GST09-1M □□□132C12	114
	283	180	2.4		340	149	2.7	5.200	GST07-2M □□□132C12	126
	276	185	1.1		333	153	1.3	5.324	GST06-2M□□□132C12	126
	259	199	2.3		312	165	2.7	5.667	GST09-1M □□□132C12	114
	257	198	2.3		310	164	2.6	5.714	GST07-2M □□□132C12	126
	251	203	1.1		303	168	1.2	5.850	GST06-2M□□□132C12	126
	230	222	1.0		277	184	1.2	6.400	GST06-2M□□□132C12	126
	230	222	2.1		277	184	2.4	6.400	GST07-2M □□□132C12	126
	209	244	1.0		251	202	1.1	7.040	GST06-2M□□□132C12	126
	206	248	2.0		248	205	2.2	7.150	GST07-2M □□□132C12	126
	181	282	1.9		218	233	2.2	8.125	GST07-2M □□□132C12	126
	180	283	0.9		217	234	1.0	8.163	GST06-2M□□□132C12	126
	167	305	1.7		201	253	2.0	8.800	GST07-2M □□□132C12	126
	163	312	0.8		197	259	1.0	9.010	GST06-2M□□□132C12	126
	149	342	1.6		180	283	1.8	9.856	GST07-2M □□□132C12	126
	131	388	1.5		158	322	1.8	11.200	GST07-2M □□□132C12	126
	126	404	3.0		152	335	3.4	11.667	GST09-2M □□□132C12	126
	119	429	2.9		143	355	3.3	12.362	GST09-2M □□□132C12	126
	117	436	1.4		141	361	1.6	12.571	GST07-2M □□□132C12	126
	105	487	2.6		126	403	3.0	14.048	GST09-2M □□□132C12	126
	103	495	1.3		124	410	1.5	14.286	GST07-2M □□□132C12	126
	97	525	2.6		117	435	3.1	15.156	GST09-2M □□□132C12	126
	96	534	1.2		115	442	1.5	15.400	GST07-2M □□□132C12	126
	85	597	2.3		103	494	2.8	17.222	GST09-2M □□□132C12	126
	84	607	1.1		101	502	1.4	17.500	GST07-2M □□□132C12	126
	73	695	1.0		89	575	1.2	20.044	GST07-2M □□□132C12	126
	72	712	2.1		86	589	2.5	20.533	GST09-2M □□□132C12	126



Selection tables

50 Hz, 60 Hz: P_N = 5.5 kW

n_N	1470 r/min				1775 r/min			i		
f_N	50 Hz				60 Hz					
	n_2 [r/min]	M_2 [Nm]	c		n_2 [r/min]	M_2 [Nm]	c			
	65	790	0.9		78	654	1.0	22.778	GST07-2M □□□132C12	126
	63	809	1.9		76	670	2.3	23.333	GST09-2M □□□132C12	126
	59	864	1.8		71	716	2.2	24.933	GST09-2M □□□132C12	126
	59	864	3.2		71	716	3.9	24.933	GST11-2M □□□132C12	126
	52	982	1.5		63	813	1.9	28.333	GST09-2M □□□132C12	126
	52	982	3.0		63	813	3.6	28.333	GST11-2M □□□132C12	126
	46	1119	2.5		55	926	3.0	32.267	GST11-2M □□□132C12	126
	40	1271	2.3		48	1053	2.8	36.667	GST11-2M □□□132C12	126
	38	1357	2.1		45	1124	2.5	39.160	GST11-2M □□□132C12	126
	36	1394	1.8		43	1154	2.2	40.816	GST11-3M □□□132C12	138
	35	1454	2.9		42	1204	3.5	42.580	GST14-3M □□□132C12	138
	33	1502	1.6		40	1244	1.9	44.000	GST11-3M □□□132C12	138
	33	1543	1.9		40	1278	2.3	44.500	GST11-2M □□□132C12	126
	30	1652	2.9		37	1368	3.5	48.386	GST14-3M □□□132C12	138
	30	1716	2.5		36	1421	3.1	49.500	GST14-2M □□□132C12	126
	29	1707	1.6		35	1414	1.9	50.000	GST11-3M □□□132C12	138
	28	1815	2.6		33	1503	3.2	53.148	GST14-3M □□□132C12	138
	26	1950	2.5		32	1615	3.1	56.250	GST14-2M □□□132C12	126
	25	1979	1.3		31	1639	1.6	57.968	GST11-3M □□□132C12	138
	25	2026	2.6		30	1677	3.1	59.321	GST14-3M □□□132C12	138
	24	2091	1.3		29	1732	1.6	61.250	GST11-3M □□□132C12	138
	21	2357	2.1		26	1952	2.5	69.042	GST14-3M □□□132C12	138
	21	2425	1.1		25	2008	1.3	71.011	GST11-3M □□□132C12	138
	19	2679	2.1		23	2219	2.5	78.457	GST14-3M □□□132C12	138
	18	2755	1.0		22	2282	1.2	80.694	GST11-3M □□□132C12	138
	17	2980	0.9		20	2468	1.1	87.267	GST11-3M □□□132C12	138
	16	3194	1.7		19	2645	2.1	93.541	GST14-3M □□□132C12	138
	15	3283	1.8		18	2719	2.2	96.157	GST14-3M □□□132C12	138
	15	3386	0.8		18	2804	1.0	99.167	GST11-3M □□□132C12	138
	14	3629	1.6		17	3006	2.0	106.296	GST14-3M □□□132C12	138
	11	4448	1.3		14	3684	1.6	130.278	GST14-3M □□□132C12	138
	11	4753	1.2		13	3937	1.5	139.211	GST14-3M □□□132C12	138
	9.3	5402	1.1		11	4473	1.3	158.194	GST14-3M □□□132C12	138
	8.6	5843	1.0		10	4839	1.2	171.111	GST14-3M □□□132C12	138



Selection tables

50 Hz, 60 Hz: P_N = 7.5 kW

n_N	1460 r/min				1765 r/min			i		
f_N	50 Hz				60 Hz					
	n_2 [r/min]	M_2 [Nm]	c		n_2 [r/min]	M_2 [Nm]	c			
	899	79	1.4		1083	65	1.5	1.625	GST07-1M □□□132C22	114
	730	97	1.3		880	80	1.5	2.000	GST07-1M □□□132C22	114
	652	108	1.2		786	90	1.4	2.240	GST07-1M □□□132C22	114
	520	136	3.1		626	112	3.5	2.810	GST09-1M □□□132C22	114
	511	138	1.1		616	114	1.3	2.857	GST07-1M □□□132C22	114
	481	144	1.2		580	119	1.3	3.033	GST06-2M□□□132C22	126
	479	145	2.4		577	120	2.8	3.048	GST07-2M □□□132C22	126
	438	159	1.1		528	131	1.3	3.333	GST06-2M□□□132C22	126
	436	159	2.3		525	132	2.6	3.350	GST07-2M □□□132C22	126
	424	166	2.7		511	138	3.0	3.444	GST09-1M □□□132C22	114
	417	169	1.0		503	140	1.2	3.500	GST07-1M □□□132C22	114
	351	198	1.0		423	164	1.1	4.160	GST06-2M□□□132C22	126
	346	201	2.0		417	166	2.3	4.225	GST07-2M □□□132C22	126
	320	220	0.8		387	182	1.0	4.556	GST07-1M □□□132C22	114
	319	218	0.9		385	180	1.1	4.571	GST06-2M□□□132C22	126
	315	221	1.9		379	183	2.1	4.643	GST07-2M □□□132C22	126
	313	225	1.7		377	187	1.9	4.667	GST09-1M □□□132C22	114
	281	247	1.7		339	205	2.0	5.200	GST07-2M □□□132C22	126
	274	253	0.8		332	210	0.9	5.324	GST06-2M□□□132C22	126
	258	274	1.7		311	226	1.9	5.667	GST09-1M □□□132C22	114
	256	272	1.6		308	225	1.9	5.714	GST07-2M □□□132C22	126
	228	305	1.5		275	252	1.7	6.400	GST07-2M □□□132C22	126
	204	340	1.4		246	281	1.6	7.150	GST07-2M □□□132C22	126
	200	348	3.2		241	288	3.6	7.305	GST09-2M □□□132C22	126
	182	382	3.0		219	316	3.4	8.027	GST09-2M □□□132C22	126
	180	387	1.4		217	320	1.6	8.125	GST07-2M □□□132C22	126
	166	419	1.3		200	346	1.4	8.800	GST07-2M □□□132C22	126
	162	429	2.6		195	355	3.0	9.010	GST09-2M □□□132C22	126
	148	469	1.2		179	388	1.3	9.856	GST07-2M □□□132C22	126
	142	489	2.4		171	404	2.8	10.267	GST09-2M □□□132C22	126
	130	533	1.1		157	441	1.3	11.200	GST07-2M □□□132C22	126
	125	555	2.2		151	459	2.5	11.667	GST09-2M □□□132C22	126
	118	588	2.1		142	487	2.4	12.362	GST09-2M □□□132C22	126
	116	598	1.0		140	495	1.1	12.571	GST07-2M □□□132C22	126
	104	669	1.9		125	553	2.2	14.048	GST09-2M □□□132C22	126
	102	680	0.9		123	562	1.1	14.286	GST07-2M □□□132C22	126
	96	721	1.9		116	597	2.2	15.156	GST09-2M □□□132C22	126
	95	733	0.9		114	606	1.1	15.400	GST07-2M □□□132C22	126
	85	820	1.7		102	678	2.0	17.222	GST09-2M □□□132C22	126
	83	833	0.8		101	689	1.0	17.500	GST07-2M □□□132C22	126



Selection tables

50 Hz, 60 Hz: P_N = 7.5 kW

n_N	1460 r/min				1765 r/min			i		
f_N	50 Hz				60 Hz					
	n_2 [r/min]	M_2 [Nm]	c		n_2 [r/min]	M_2 [Nm]	c			
	72	966	2.9		87	799	3.5	20.289	GST11-2M □□□132C22	126
	71	977	1.5		86	808	1.8	20.533	GST09-2M □□□132C22	126
	63	1097	2.7		76	908	3.2	23.056	GST11-2M □□□132C22	126
	63	1111	1.4		75	919	1.6	23.333	GST09-2M □□□132C22	126
	59	1187	1.3		71	982	1.6	24.933	GST09-2M □□□132C22	126
	59	1187	2.3		71	982	2.8	24.933	GST11-2M □□□132C22	126
	52	1348	1.1		62	1115	1.4	28.333	GST09-2M □□□132C22	126
	52	1348	2.2		62	1115	2.6	28.333	GST11-2M □□□132C22	126
	45	1536	1.8		55	1270	2.2	32.267	GST11-2M □□□132C22	126
	45	1536	3.1		55	1270	3.7	32.267	GST14-2M □□□132C22	126
	40	1745	1.7		48	1444	2.0	36.667	GST11-2M □□□132C22	126
	40	1745	3.1		48	1444	3.7	36.667	GST14-2M □□□132C22	126
	37	1864	1.5		45	1542	1.8	39.160	GST11-2M □□□132C22	126
	37	1864	2.6		45	1542	3.1	39.160	GST14-2M □□□132C22	126
	36	1884	2.4		44	1558	2.9	40.185	GST14-3M □□□132C22	138
	36	1913	1.3		43	1583	1.6	40.816	GST11-3M □□□132C22	138
	34	1996	2.1		41	1651	2.6	42.580	GST14-3M □□□132C22	138
	33	2063	1.2		40	1706	1.4	44.000	GST11-3M □□□132C22	138
	33	2118	1.4		40	1752	1.7	44.500	GST11-2M □□□132C22	126
	33	2118	2.6		40	1752	3.1	44.500	GST14-2M □□□132C22	126
	30	2268	2.1		36	1876	2.6	48.386	GST14-3M □□□132C22	138
	30	2356	1.8		36	1949	2.2	49.500	GST14-2M □□□132C22	126
	29	2344	1.2		35	1939	1.4	50.000	GST11-3M □□□132C22	138
	28	2492	1.9		33	2061	2.3	53.148	GST14-3M □□□132C22	138
	26	2677	1.8		31	2215	2.2	56.250	GST14-2M □□□132C22	126
	25	2718	0.9		30	2248	1.1	57.968	GST11-3M □□□132C22	138
	25	2781	1.9		30	2300	2.3	59.321	GST14-3M □□□132C22	138
	24	2871	0.9		29	2375	1.1	61.250	GST11-3M □□□132C22	138
	21	3237	1.5		26	2677	1.8	69.042	GST14-3M □□□132C22	138
	19	3678	1.5		22	3042	1.8	78.457	GST14-3M □□□132C22	138
	16	4385	1.3		19	3627	1.5	93.541	GST14-3M □□□132C22	138
	15	4508	1.3		18	3729	1.6	96.157	GST14-3M □□□132C22	138
	14	4983	1.2		17	4122	1.4	106.296	GST14-3M □□□132C22	138
	11	6107	1.0		14	5052	1.2	130.278	GST14-3M □□□132C22	138
	11	6526	0.9		13	5398	1.1	139.211	GST14-3M □□□132C22	138



Selection tables

50 Hz, 60 Hz: P_N = 11.0 kW

n_N	1470 r/min				1775 r/min			i		
f_N	50 Hz				60 Hz					
	n_2 [r/min]	M_2 [Nm]	c		n_2 [r/min]	M_2 [Nm]	c			
	942	110	2.5		1135	91	2.9	1.560	GST09-1M □□□160C22	114
	905	114	0.9		1089	95	1.1	1.625	GST07-1M □□□160C22	114
	735	141	0.9		885	117	1.0	2.000	GST07-1M □□□160C22	114
	718	144	2.3		864	119	2.7	2.048	GST09-1M □□□160C22	114
	656	158	0.9		790	131	1.0	2.240	GST07-1M □□□160C22	114
	630	164	2.3		759	136	2.6	2.333	GST09-1M □□□160C22	114
	523	198	2.1		630	164	2.4	2.810	GST09-1M □□□160C22	114
	482	211	1.7		581	175	1.9	3.048	GST07-2M □□□160C22	126
	439	232	1.6		528	192	1.8	3.350	GST07-2M □□□160C22	126
	427	242	1.8		514	201	2.1	3.444	GST09-1M □□□160C22	114
	362	281	3.1		436	233	3.6	4.056	GST09-2M □□□160C22	126
	348	293	1.4		419	243	1.5	4.225	GST07-2M □□□160C22	126
	330	309	3.0		397	256	3.4	4.457	GST09-2M □□□160C22	126
	317	322	1.3		381	267	1.5	4.643	GST07-2M □□□160C22	126
	283	361	1.2		340	299	1.4	5.200	GST07-2M □□□160C22	126
	276	369	2.7		333	306	3.1	5.324	GST09-2M □□□160C22	126
	257	396	1.1		310	328	1.3	5.714	GST07-2M □□□160C22	126
	251	406	2.5		303	336	2.9	5.850	GST09-2M □□□160C22	126
	230	444	1.0		277	367	1.2	6.400	GST07-2M □□□160C22	126
	221	462	2.3		266	383	2.6	6.667	GST09-2M □□□160C22	126
	206	496	1.0		248	411	1.1	7.150	GST07-2M □□□160C22	126
	201	506	2.2		242	419	2.5	7.305	GST09-2M □□□160C22	126
	183	557	2.0		221	461	2.3	8.027	GST09-2M □□□160C22	126
	181	563	1.0		218	467	1.1	8.125	GST07-2M □□□160C22	126
	167	610	0.9		201	505	1.0	8.800	GST07-2M □□□160C22	126
	163	625	1.8		197	517	2.1	9.010	GST09-2M □□□160C22	126
	149	683	0.8		180	566	0.9	9.856	GST07-2M □□□160C22	126
	143	712	1.7		172	589	1.9	10.267	GST09-2M □□□160C22	126
	131	776	3.1		158	643	3.5	11.200	GST11-2M □□□160C22	126
	126	809	1.5		152	670	1.7	11.667	GST09-2M □□□160C22	126
	119	857	1.5		143	710	1.7	12.362	GST09-2M □□□160C22	126
	117	872	2.9		141	722	3.3	12.571	GST11-2M □□□160C22	126
	105	974	1.3		126	807	1.5	14.048	GST09-2M □□□160C22	126
	103	990	2.6		124	820	3.0	14.286	GST11-2M □□□160C22	126
	97	1051	1.3		117	870	1.5	15.156	GST09-2M □□□160C22	126
	96	1068	2.5		115	884	3.0	15.400	GST11-2M □□□160C22	126
	85	1194	1.1		103	989	1.4	17.222	GST09-2M □□□160C22	126
	84	1213	2.3		101	1005	2.7	17.500	GST11-2M □□□160C22	126
	73	1407	2.0		87	1165	2.4	20.289	GST11-2M □□□160C22	126
	65	1579	3.2		78	1308	3.8	22.778	GST14-2M □□□160C22	126



Selection tables

50 Hz, 60 Hz: P_N = 11.0 kW

n_N	1470 r/min				1775 r/min			i		
f_N	50 Hz				60 Hz					
	n_2 [r/min]	M_2 [Nm]	c		n_2 [r/min]	M_2 [Nm]	c			
	64	1598	1.8		77	1324	2.2	23.056	GST11-2M □□□160C22	126
	60	1703	3.1		72	1411	3.7	24.567	GST14-2M □□□160C22	126
	59	1729	1.6		71	1432	1.9	24.933	GST11-2M □□□160C22	126
	53	1935	2.8		63	1603	3.3	27.917	GST14-2M □□□160C22	126
	52	1964	1.5		63	1627	1.8	28.333	GST11-2M □□□160C22	126
	46	2237	2.4		55	1853	2.9	32.267	GST14-2M □□□160C22	126
	40	2542	2.3		48	2105	2.7	36.667	GST14-2M □□□160C22	126
	38	2715	2.0		45	2248	2.4	39.160	GST14-2M □□□160C22	126
	37	2744	1.6		44	2273	2.0	40.185	GST14-3M □□□160C22	138
	35	2908	1.5		42	2408	1.8	42.580	GST14-3M □□□160C22	138
	33	3085	1.9		40	2555	2.3	44.500	GST14-2M □□□160C22	126
	30	3304	1.5		37	2737	1.8	48.386	GST14-3M □□□160C22	138
	28	3629	1.3		33	3006	1.6	53.148	GST14-3M □□□160C22	138
	25	4051	1.3		30	3355	1.6	59.321	GST14-3M □□□160C22	138
	21	4715	1.0		26	3905	1.3	69.042	GST14-3M □□□160C22	138
	19	5358	1.0		23	4437	1.3	78.457	GST14-3M □□□160C22	138
	15	6567	0.9		18	5438	1.1	96.157	GST14-3M □□□160C22	138



Selection tables

50 Hz, 60 Hz: P_N = 15.0 kW

n_N	1470 r/min				1775 r/min			i		
f_N	50 Hz				60 Hz					
	n_2 [r/min]	M_2 [Nm]	c		n_2 [r/min]	M_2 [Nm]	c			
	942	150	1.9		1135	124	2.1	1.560	GST09-1M □□□160C32	114
	718	197	1.7		864	163	2.0	2.048	GST09-1M □□□160C32	114
	630	224	1.7		759	185	1.9	2.333	GST09-1M □□□160C32	114
	523	270	1.6		630	223	1.8	2.810	GST09-1M □□□160C32	114
	482	288	1.2		581	239	1.4	3.048	GST07-2M □□□160C32	126
	439	317	1.2		528	262	1.3	3.350	GST07-2M □□□160C32	126
	427	331	1.3		514	274	1.5	3.444	GST09-1M □□□160C32	114
	362	383	2.3		436	318	2.6	4.056	GST09-2M □□□160C32	126
	348	399	1.0		419	331	1.1	4.225	GST07-2M □□□160C32	126
	330	421	2.2		397	349	2.5	4.457	GST09-2M □□□160C32	126
	317	439	0.9		381	364	1.1	4.643	GST07-2M □□□160C32	126
	283	492	0.9		340	407	1.0	5.200	GST07-2M □□□160C32	126
	276	503	2.0		333	417	2.3	5.324	GST09-2M □□□160C32	126
	276	503	3.2		333	417	3.6	5.324	GST11-2M □□□160C32	126
	257	540	0.8		311	447	0.9	5.714	GST07-2M □□□160C32	126
	251	553	1.8		303	458	2.1	5.850	GST09-2M □□□160C32	126
	251	553	3.2		303	458	3.7	5.850	GST11-2M □□□160C32	126
	230	605	3.0		277	501	3.4	6.400	GST11-2M □□□160C32	126
	221	630	1.7		266	522	1.9	6.667	GST09-2M □□□160C32	126
	214	649	3.2		258	537	3.6	6.864	GST11-2M □□□160C32	126
	201	691	1.6		242	572	1.8	7.305	GST09-2M □□□160C32	126
	189	737	2.9		227	611	3.3	7.800	GST11-2M □□□160C32	126
	183	759	1.5		221	628	1.7	8.027	GST09-2M □□□160C32	126
	163	852	1.3		197	705	1.5	9.010	GST09-2M □□□160C32	126
	163	852	2.7		197	705	3.0	9.010	GST11-2M □□□160C32	126
	149	932	2.5		180	772	2.8	9.856	GST11-2M □□□160C32	126
	143	971	1.2		172	804	1.4	10.267	GST09-2M □□□160C32	126
	131	1059	2.2		158	877	2.6	11.200	GST11-2M □□□160C32	126
	126	1103	1.1		152	913	1.2	11.667	GST09-2M □□□160C32	126
	119	1169	1.1		143	968	1.2	12.362	GST09-2M □□□160C32	126
	117	1189	2.1		141	984	2.4	12.571	GST11-2M □□□160C32	126
	105	1328	1.0		126	1100	1.1	14.048	GST09-2M □□□160C32	126
	105	1328	3.2		126	1100	3.7	14.048	GST14-2M □□□160C32	126
	103	1351	1.9		124	1119	2.2	14.286	GST11-2M □□□160C32	126
	97	1433	0.9		117	1187	1.1	15.156	GST09-2M □□□160C32	126
	97	1433	3.1		117	1187	3.8	15.156	GST14-2M □□□160C32	126
	96	1456	1.9		115	1206	2.2	15.400	GST11-2M □□□160C32	126
	85	1628	0.8		103	1348	1.0	17.222	GST09-2M □□□160C32	126
	85	1628	2.8		103	1348	3.4	17.222	GST14-2M □□□160C32	126
	84	1654	1.7		101	1370	2.0	17.500	GST11-2M □□□160C32	126



Selection tables

50 Hz, 60 Hz: P_N = 15.0 kW

n_N	1470 r/min				1775 r/min			i		
f_N	50 Hz				60 Hz					
	n_2 [r/min]	M_2 [Nm]	c		n_2 [r/min]	M_2 [Nm]	c			
	73	1895	2.6		88	1569	3.1	20.044	GST14-2M □□□160C32	126
	73	1918	1.4		87	1589	1.7	20.289	GST11-2M □□□160C32	126
	65	2153	2.3		78	1783	2.8	22.778	GST14-2M □□□160C32	126
	64	2180	1.3		77	1805	1.6	23.056	GST11-2M □□□160C32	126
	60	2323	2.3		72	1923	2.7	24.567	GST14-2M □□□160C32	126
	59	2357	1.2		71	1952	1.4	24.933	GST11-2M □□□160C32	126
	53	2639	2.0		63	2186	2.4	27.917	GST14-2M □□□160C32	126
	52	2679	1.1		63	2218	1.3	28.333	GST11-2M □□□160C32	126
	46	3051	1.8		55	2526	2.2	32.267	GST14-2M □□□160C32	126
	40	3466	1.7		48	2871	2.0	36.667	GST14-2M □□□160C32	126
	38	3702	1.5		45	3066	1.8	39.160	GST14-2M □□□160C32	126
	37	3742	1.2		44	3099	1.4	40.185	GST14-3M □□□160C32	138
	35	3965	1.1		42	3284	1.3	42.580	GST14-3M □□□160C32	138
	33	4207	1.4		40	3484	1.7	44.500	GST14-2M □□□160C32	126
	30	4506	1.1		37	3732	1.3	48.386	GST14-3M □□□160C32	138
	28	4949	1.0		33	4099	1.2	53.148	GST14-3M □□□160C32	138
	25	5524	1.0		30	4575	1.2	59.321	GST14-3M □□□160C32	138



Selection tables

50 Hz, 60 Hz: P_N = 18.5 kW

n_N	1475 r/min				1775 r/min			i		
f_N	50 Hz				60 Hz					
	n_2 [r/min]	M_2 [Nm]	c		n_2 [r/min]	M_2 [Nm]	c			
	946	184	1.5		1138	153	1.7	1.560	GST09-1M □□□180C12	114
	720	242	1.4		867	201	1.6	2.048	GST09-1M □□□180C12	114
	632	275	1.3		761	229	1.5	2.333	GST09-1M □□□180C12	114
	525	331	1.3		632	275	1.4	2.810	GST09-1M □□□180C12	114
	428	406	1.1		515	338	1.2	3.444	GST09-1M □□□180C12	114
	364	471	1.9		438	392	2.1	4.056	GST09-2M □□□180C12	126
	364	471	3.2		438	392	3.6	4.056	GST11-2M □□□180C12	126
	331	518	1.8		398	430	2.0	4.457	GST09-2M □□□180C12	126
	331	518	3.1		398	430	3.5	4.457	GST11-2M □□□180C12	126
	277	619	1.6		333	514	1.8	5.324	GST09-2M □□□180C12	126
	277	619	2.6		333	514	2.9	5.324	GST11-2M □□□180C12	126
	252	680	1.5		303	565	1.7	5.850	GST09-2M □□□180C12	126
	252	680	2.6		303	565	3.0	5.850	GST11-2M □□□180C12	126
	231	744	2.4		277	618	2.8	6.400	GST11-2M □□□180C12	126
	221	775	1.4		266	644	1.6	6.667	GST09-2M □□□180C12	126
	215	798	2.6		259	663	2.9	6.864	GST11-2M □□□180C12	126
	202	849	1.3		243	705	1.5	7.305	GST09-2M □□□180C12	126
	189	906	2.3		228	753	2.7	7.800	GST11-2M □□□180C12	126
	184	933	1.2		221	775	1.4	8.027	GST09-2M □□□180C12	126
	164	1047	1.1		197	870	1.2	9.010	GST09-2M □□□180C12	126
	164	1047	2.2		197	870	2.5	9.010	GST11-2M □□□180C12	126
	150	1144	3.1		180	950	3.6	9.841	GST14-2M □□□180C12	126
	150	1145	2.0		180	952	2.3	9.856	GST11-2M □□□180C12	126
	144	1193	1.0		173	991	1.1	10.267	GST09-2M □□□180C12	126
	134	1278	3.1		161	1062	3.5	11.000	GST14-2M □□□180C12	126
	132	1301	1.8		159	1082	2.1	11.200	GST11-2M □□□180C12	126
	126	1356	0.9		152	1127	1.0	11.667	GST09-2M □□□180C12	126
	119	1437	0.9		144	1194	1.0	12.362	GST09-2M □□□180C12	126
	119	1437	2.9		144	1194	3.3	12.362	GST14-2M □□□180C12	126
	117	1461	1.7		141	1214	2.0	12.571	GST11-2M □□□180C12	126
	105	1632	2.6		126	1357	3.0	14.048	GST14-2M □□□180C12	126
	103	1660	1.6		124	1379	1.8	14.286	GST11-2M □□□180C12	126
	97	1761	2.5		117	1463	3.1	15.156	GST14-2M □□□180C12	126
	96	1790	1.5		115	1487	1.8	15.400	GST11-2M □□□180C12	126
	86	2001	2.3		103	1663	2.7	17.222	GST14-2M □□□180C12	126
	84	2034	1.4		101	1690	1.6	17.500	GST11-2M □□□180C12	126
	74	2329	2.1		89	1936	2.5	20.044	GST14-2M □□□180C12	126
	73	2358	1.2		88	1959	1.4	20.289	GST11-2M □□□180C12	126
	65	2647	1.9		78	2200	2.3	22.778	GST14-2M □□□180C12	126
	64	2679	1.1		77	2226	1.3	23.056	GST11-2M □□□180C12	126



Selection tables

50 Hz, 60 Hz: P_N = 18.5 kW

n_N	1475 r/min				1775 r/min			i		
f_N	50 Hz				60 Hz					
	n_2 [r/min]	M_2 [Nm]	c		n_2 [r/min]	M_2 [Nm]	c			
	60	2855	1.8		72	2372	2.2	24.567	GST14-2M □□□180C12	126
	59	2897	1.0		71	2408	1.2	24.933	GST11-2M □□□180C12	126
	53	3244	1.7		64	2696	2.0	27.917	GST14-2M □□□180C12	126
	52	3292	0.9		63	2736	1.1	28.333	GST11-2M □□□180C12	126
	46	3750	1.4		55	3116	1.7	32.267	GST14-2M □□□180C12	126
	40	4261	1.4		48	3541	1.6	36.667	GST14-2M □□□180C12	126
	38	4551	1.2		45	3781	1.4	39.160	GST14-2M □□□180C12	126
	37	4600	1.0		44	3822	1.2	40.185	GST14-3M □□□180C12	138
	35	4874	0.9		42	4050	1.1	42.580	GST14-3M □□□180C12	138
	33	5171	1.1		40	4297	1.3	44.500	GST14-2M □□□180C12	126
	31	5538	0.9		37	4602	1.1	48.386	GST14-3M □□□180C12	138



Selection tables

50 Hz, 60 Hz: P_N = 22.0 kW

n_N	1470 r/min				1775 r/min			i		
f_N	50 Hz				60 Hz					
	n_2 [r/min]	M_2 [Nm]	c		n_2 [r/min]	M_2 [Nm]	c			
	942	220	1.3		1135	182	1.4	1.560	GST09-1M □□□180C32	114
	718	288	1.2		864	239	1.3	2.048	GST09-1M □□□180C32	114
	630	328	1.1		759	272	1.3	2.333	GST09-1M □□□180C32	114
	523	395	1.1		630	328	1.2	2.810	GST09-1M □□□180C32	114
	427	485	0.9		514	402	1.0	3.444	GST09-1M □□□180C32	114
	362	562	1.6		436	466	1.8	4.056	GST09-2M □□□180C32	126
	362	562	2.6		436	466	3.0	4.056	GST11-2M □□□180C32	126
	330	618	1.5		397	512	1.7	4.457	GST09-2M □□□180C32	126
	330	618	2.6		397	512	3.0	4.457	GST11-2M □□□180C32	126
	283	721	3.2		340	597	3.6	5.200	GST14-2M □□□180C32	126
	276	738	1.3		333	611	1.5	5.324	GST09-2M □□□180C32	126
	276	738	2.2		333	611	2.5	5.324	GST11-2M □□□180C32	126
	257	792	3.2		310	656	3.6	5.714	GST14-2M □□□180C32	126
	251	811	1.3		303	672	1.4	5.850	GST09-2M □□□180C32	126
	251	811	2.2		303	672	2.5	5.850	GST11-2M □□□180C32	126
	234	872	3.1		282	722	3.5	6.286	GST14-2M □□□180C32	126
	230	887	2.0		277	735	2.3	6.400	GST11-2M □□□180C32	126
	221	924	1.2		266	766	1.3	6.667	GST09-2M □□□180C32	126
	214	952	2.2		258	788	2.5	6.864	GST11-2M □□□180C32	126
	201	1013	1.1		242	839	1.2	7.305	GST09-2M □□□180C32	126
	189	1082	2.0		227	896	2.2	7.800	GST11-2M □□□180C32	126
	183	1113	1.0		221	922	1.2	8.027	GST09-2M □□□180C32	126
	183	1113	2.9		221	922	3.3	8.027	GST14-2M □□□180C32	126
	167	1220	3.1		201	1011	3.5	8.800	GST14-2M □□□180C32	126
	163	1249	0.9		197	1035	1.0	9.010	GST09-2M □□□180C32	126
	163	1249	1.8		197	1035	2.1	9.010	GST11-2M □□□180C32	126
	149	1365	2.6		180	1130	3.0	9.841	GST14-2M □□□180C32	126
	149	1367	1.7		180	1132	1.9	9.856	GST11-2M □□□180C32	126
	143	1424	0.8		173	1179	0.9	10.267	GST09-2M □□□180C32	126
	134	1525	2.6		161	1263	2.9	11.000	GST14-2M □□□180C32	126
	131	1553	1.5		158	1286	1.7	11.200	GST11-2M □□□180C32	126
	119	1714	2.4		143	1420	2.8	12.362	GST14-2M □□□180C32	126
	117	1743	1.4		141	1444	1.7	12.571	GST11-2M □□□180C32	126
	105	1948	2.2		126	1613	2.5	14.048	GST14-2M □□□180C32	126
	103	1981	1.3		124	1640	1.5	14.286	GST11-2M □□□180C32	126
	97	2101	2.1		117	1740	2.6	15.156	GST14-2M □□□180C32	126
	96	2135	1.3		115	1768	1.5	15.400	GST11-2M □□□180C32	126
	85	2388	1.9		103	1978	2.3	17.222	GST14-2M □□□180C32	126
	84	2427	1.1		101	2010	1.4	17.500	GST11-2M □□□180C32	126
	73	2779	1.8		88	2302	2.1	20.044	GST14-2M □□□180C32	126



Selection tables

50 Hz, 60 Hz: P_N = 22.0 kW

n_N	1470 r/min				1775 r/min			i		
f_N	50 Hz				60 Hz					
	n_2 [r/min]	M_2 [Nm]	c		n_2 [r/min]	M_2 [Nm]	c			
	73	2813	1.0		87	2330	1.2	20.289	GST11-2M □□□180C32	126
	65	3158	1.6		78	2616	1.9	22.778	GST14-2M □□□180C32	126
	64	3197	0.9		77	2648	1.1	23.056	GST11-2M □□□180C32	126
	60	3406	1.5		72	2821	1.9	24.567	GST14-2M □□□180C32	126
	59	3457	0.8		71	2863	1.0	24.933	GST11-2M □□□180C32	126
	53	3871	1.4		63	3206	1.7	27.917	GST14-2M □□□180C32	126
	46	4474	1.2		55	3705	1.5	32.267	GST14-2M □□□180C32	126
	40	5084	1.1		48	4211	1.4	36.667	GST14-2M □□□180C32	126
	38	5430	1.0		45	4497	1.2	39.160	GST14-2M □□□180C32	126
	37	5488	0.8		44	4545	1.0	40.185	GST14-3M □□□180C32	138
	33	6170	0.9		40	5110	1.1	44.500	GST14-2M □□□180C32	126



Selection tables

50 Hz, 60 Hz: P_N = 30.0 kW

n_N	1465 r/min				1770 r/min			i		
f_N	50 Hz				60 Hz					
	n_2 [r/min]	M_2 [Nm]	c		n_2 [r/min]	M_2 [Nm]	c			
	939	300	0.9		1131	249	1.1	1.560	GST09-1M □□□180C42	114
	716	394	0.9		862	326	1.0	2.048	GST09-1M □□□180C42	114
	628	449	0.8		759	372	0.9	2.333	GST09-1M □□□180C42	114
	361	770	1.1		435	637	1.3	4.056	GST09-2M □□□180C42	126
	361	770	1.9		435	637	2.2	4.056	GST11-2M □□□180C42	126
	329	846	1.1		396	700	1.3	4.457	GST09-2M □□□180C42	126
	329	846	1.9		396	700	2.2	4.457	GST11-2M □□□180C42	126
	282	987	2.3		339	817	2.6	5.200	GST14-2M □□□180C42	126
	275	1010	1.0		332	836	1.1	5.324	GST09-2M □□□180C42	126
	275	1010	1.6		332	836	1.8	5.324	GST11-2M □□□180C42	126
	256	1084	2.3		309	897	2.6	5.714	GST14-2M □□□180C42	126
	250	1110	0.9		302	919	1.1	5.850	GST09-2M □□□180C42	126
	250	1110	1.6		302	919	1.8	5.850	GST11-2M □□□180C42	126
	233	1193	2.3		281	987	2.6	6.286	GST14-2M □□□180C42	126
	229	1214	1.5		276	1005	1.7	6.400	GST11-2M □□□180C42	126
	220	1265	0.8		266	1047	1.0	6.667	GST09-2M □□□180C42	126
	213	1302	1.6		257	1078	1.8	6.864	GST11-2M □□□180C42	126
	188	1480	1.4		226	1225	1.6	7.800	GST11-2M □□□180C42	126
	183	1523	2.1		220	1261	2.4	8.027	GST14-2M □□□180C42	126
	167	1670	2.2		201	1382	2.6	8.800	GST14-2M □□□180C42	126
	163	1709	1.3		196	1415	1.5	9.010	GST11-2M □□□180C42	126
	149	1867	1.9		179	1545	2.2	9.841	GST14-2M □□□180C42	126
	149	1870	1.2		179	1548	1.4	9.856	GST11-2M □□□180C42	126
	133	2087	1.9		161	1727	2.2	11.000	GST14-2M □□□180C42	126
	131	2125	1.1		158	1759	1.3	11.200	GST11-2M □□□180C42	126
	119	2345	1.8		143	1941	2.0	12.362	GST14-2M □□□180C42	126
	117	2385	1.1		140	1974	1.2	12.571	GST11-2M □□□180C42	126
	104	2665	1.6		126	2206	1.8	14.048	GST14-2M □□□180C42	126
	103	2710	1.0		124	2243	1.1	14.286	GST11-2M □□□180C42	126
	97	2875	1.6		117	2380	1.9	15.156	GST14-2M □□□180C42	126
	95	2922	0.9		115	2418	1.1	15.400	GST11-2M □□□180C42	126
	85	3268	1.4		103	2704	1.7	17.222	GST14-2M □□□180C42	126
	84	3320	0.8		101	2748	1.0	17.500	GST11-2M □□□180C42	126
	73	3803	1.3		88	3148	1.6	20.044	GST14-2M □□□180C42	126
	64	4322	1.2		78	3577	1.4	22.778	GST14-2M □□□180C42	126
	60	4661	1.1		72	3858	1.4	24.567	GST14-2M □□□180C42	126
	53	5297	1.0		63	4384	1.2	27.917	GST14-2M □□□180C42	126
	45	6122	0.9		55	5067	1.1	32.267	GST14-2M □□□180C42	126
	40	6957	0.8		48	5758	1.0	36.667	GST14-2M □□□180C42	126



Selection tables

50 Hz, 60 Hz: P_N = 37.0 kW

n_N	1483 r/min				1787 r/min			i		
f_N	50 Hz				60 Hz					
	n_2 [r/min]	M_2 [Nm]	c		n_2 [r/min]	M_2 [Nm]	c			
	366	938	1.6		440	778	1.8	4.056	GST11-2M □□□225C12	126
	351	977	2.8		422	810	3.2	4.225	GST14-2M □□□225C12	126
	333	1030	1.6		400	855	1.8	4.457	GST11-2M □□□225C12	126
	319	1073	2.7		384	891	3.1	4.643	GST14-2M □□□225C12	126
	285	1202	2.5		343	998	2.9	5.200	GST14-2M □□□225C12	126
	279	1231	1.3		335	1021	1.5	5.324	GST11-2M □□□225C12	126
	260	1321	2.5		312	1096	2.8	5.714	GST14-2M □□□225C12	126
	254	1352	1.3		305	1122	1.5	5.850	GST11-2M □□□225C12	126
	236	1453	2.3		284	1206	2.7	6.286	GST14-2M □□□225C12	126
	232	1479	1.2		279	1228	1.4	6.400	GST11-2M □□□225C12	126
	216	1587	1.3		260	1317	1.5	6.864	GST11-2M □□□225C12	126
	207	1653	2.1		249	1372	2.4	7.150	GST14-2M □□□225C12	126
	190	1803	1.2		229	1496	1.3	7.800	GST11-2M □□□225C12	126
	185	1856	2.0		222	1540	2.3	8.027	GST14-2M □□□225C12	126
	169	2034	1.8		203	1688	2.1	8.800	GST14-2M □□□225C12	126
	165	2083	1.1		198	1728	1.2	9.010	GST11-2M □□□225C12	126
	151	2275	1.7		181	1888	1.9	9.841	GST14-2M □□□225C12	126
	151	2278	1.0		181	1891	1.2	9.856	GST11-2M □□□225C12	126
	135	2543	1.5		162	2110	1.8	11.000	GST14-2M □□□225C12	126
	132	2589	0.9		159	2149	1.0	11.200	GST11-2M □□□225C12	126
	120	2858	1.5		144	2371	1.7	12.362	GST14-2M □□□225C12	126
	118	2906	0.9		142	2412	1.0	12.571	GST11-2M □□□225C12	126
	106	3247	1.3		127	2695	1.5	14.048	GST14-2M □□□225C12	126
	98	3503	1.3		118	2907	1.5	15.156	GST14-2M □□□225C12	126
	86	3981	1.1		104	3304	1.4	17.222	GST14-2M □□□225C12	126
	74	4633	1.1		89	3845	1.3	20.044	GST14-2M □□□225C12	126
	65	5265	1.0		78	4370	1.1	22.778	GST14-2M □□□225C12	126



Selection tables

50 Hz, 60 Hz: P_N = 45.0 kW

n_N	1480 r/min				1784 r/min			i		
f_N	50 Hz				60 Hz					
	n_2 [r/min]	M_2 [Nm]	c		n_2 [r/min]	M_2 [Nm]	c			
	365	1143	1.3		439	948	1.5	4.056	GST11-2M □□□225C22	126
	350	1190	2.3		421	987	2.6	4.225	GST14-2M □□□225C22	126
	332	1256	1.3		399	1042	1.5	4.457	GST11-2M □□□225C22	126
	319	1308	2.2		383	1085	2.5	4.643	GST14-2M □□□225C22	126
	285	1465	2.1		342	1215	2.4	5.200	GST14-2M □□□225C22	126
	278	1500	1.1		334	1244	1.2	5.324	GST11-2M □□□225C22	126
	259	1610	2.0		312	1335	2.3	5.714	GST14-2M □□□225C22	126
	253	1648	1.1		304	1367	1.2	5.850	GST11-2M □□□225C22	126
	236	1771	1.9		283	1469	2.2	6.286	GST14-2M □□□225C22	126
	231	1803	1.0		278	1496	1.1	6.400	GST11-2M □□□225C22	126
	216	1934	1.1		259	1604	1.2	6.864	GST11-2M □□□225C22	126
	207	2014	1.7		249	1671	2.0	7.150	GST14-2M □□□225C22	126
	190	2197	1.0		228	1823	1.1	7.800	GST11-2M □□□225C22	126
	184	2261	1.7		222	1876	1.9	8.027	GST14-2M □□□225C22	126
	168	2479	1.5		202	2057	1.7	8.800	GST14-2M □□□225C22	126
	164	2538	0.9		198	2106	1.0	9.010	GST11-2M □□□225C22	126
	150	2772	1.4		181	2300	1.6	9.841	GST14-2M □□□225C22	126
	150	2776	0.8		181	2303	1.0	9.856	GST11-2M □□□225C22	126
	135	3099	1.3		162	2571	1.4	11.000	GST14-2M □□□225C22	126
	120	3482	1.2		144	2889	1.4	12.362	GST14-2M □□□225C22	126
	105	3957	1.1		127	3283	1.2	14.048	GST14-2M □□□225C22	126
	98	4269	1.0		117	3542	1.3	15.156	GST14-2M □□□225C22	126
	86	4852	0.9		103	4025	1.1	17.222	GST14-2M □□□225C22	126
	74	5647	0.9		89	4684	1.0	20.044	GST14-2M □□□225C22	126





Dimensions

GST□□-1M VBR

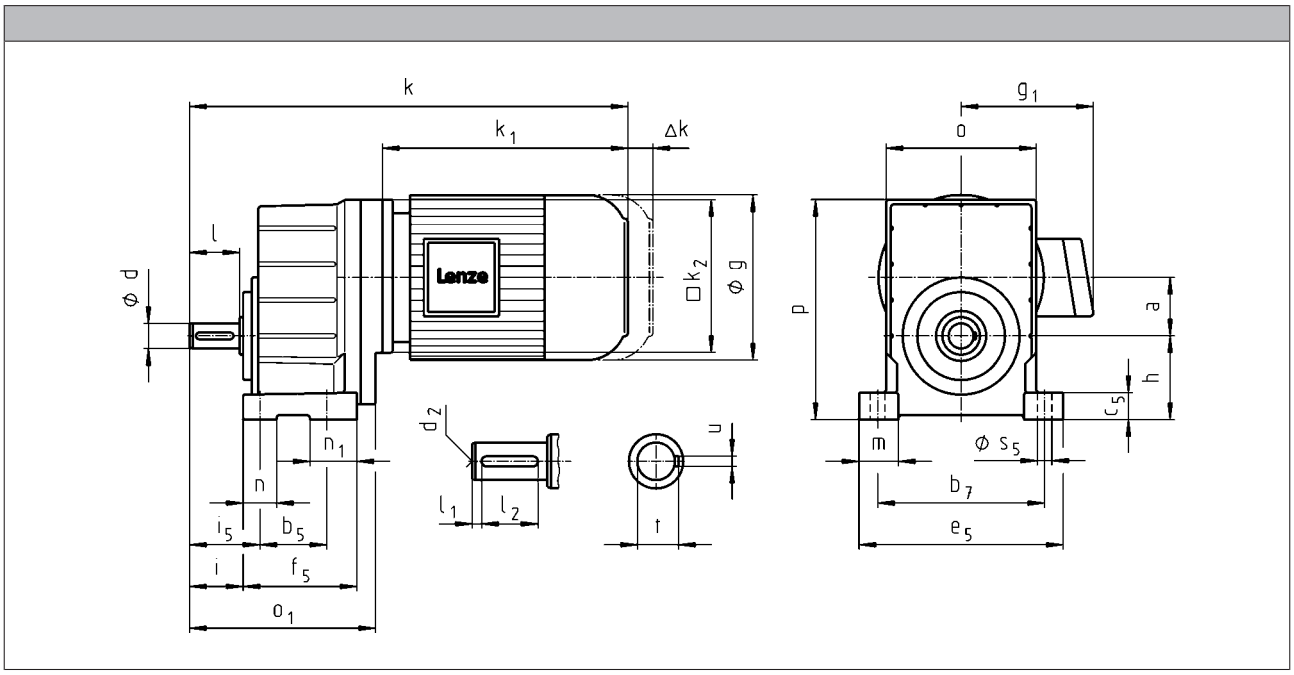



		063C11 063C12 063C31 063C32	063C42	071C11	071C13 071C31 071C32 071C33 071C42	080C13 080C33
g		123		139		156
g_1	MDEMAXX	100		109		150
	MDEMABR	107		118		132
k_1	MDEMAXX	187		207		224.5
k_2		120				145
Δ k	MDEMABR	40		52		73
	MDFMAXX	128				
	MDFMABR	170		165		183
		k				
GST04		331		351		373
GST05			352	372		394
GST06			375		395	417
GST07						446

	a	h[1)]	o[1)]	p[1)]
GST04	36	50	100	138
GST05	45	63	115	168
GST06	56	80	145	211
GST07	70	100	180	264

	d	d_2	l	l_1	l_2	u	t	i	i_5	o_1	b_5	b_7	c_5	e_5	f_5	m	n	n_1	s_5
	k6																		
GST04	16	M5	32	6	20	5	18	35	45	134	55	105	17	128	80	24	20	25	9
GST05	20	M6	40	6	28	6	22.5	43	56	165	70	125	22	154	99	32	26	29	11
GST06	25	M10	50	4	40	8	28	53	68	191	72	160	27	194	115	37	30	43	13.5
GST07	30	M10	60	7.5	45	8	33	64	84	223	80	200	35	245	137	48	40	57	18

[1)] k_2 !



Dimensions

GST□□-1M VBR

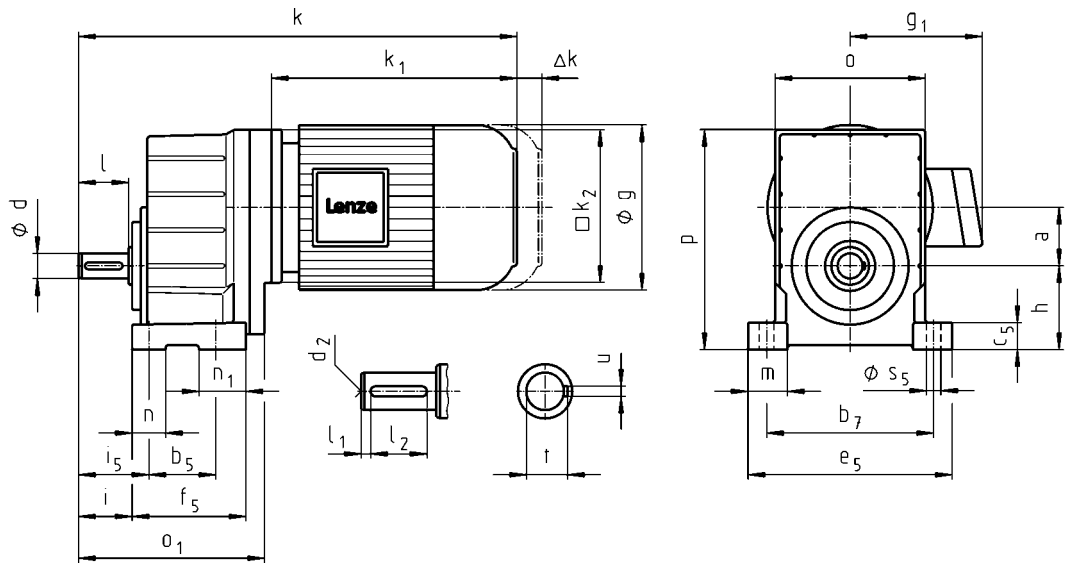

		080C32	090C12	090C32	100C12	100C32
g		156	176		194	
g_1	MHEMAXX	150	152	157	166	
	MHEMABR	132	137		147	
k_1	MHEMAXX	224.5	274		309	324
k_2		145	180			
Δ k	MHEMABR	73	68		76	
	MHFMAXX	128			109	
	MHFMABR	183	181		170	
		k				
GST04		373	433			
GST05		394	454		489	504
GST06		417	477		512	527
GST07		446	506		541	556
GST09			549		584	599



		112C22	132C12 132C22	160C22	160C32	180C12 180C32	180C42
g		218	258	310		348	
g_1	MHEMAXX	176	195	210		230	
	MHEMABR	158	187	210		230	
k_1	MHEMAXX	363	403	457.5	501.5	561	618
k_2		222	265	300			
Δ k	MHEMABR	90	109.5	105		113	
	MHFMAXX	102	115	149			155
	MHFMABR	183	201.5	179		215	
		k					
	GST06	572					
	GST07	601	649	708			
	GST09	644	692	751	795	855	912

	a	h[1)]	o[1)]	p[1)]
GST04	36	50	100	138
GST05	45	63	115	168
GST06	56	80	145	211
GST07	70	100	180	264
GST09	89	125	222	329

	d	d_2	l	l_1	l_2	u	t	i	i_5	o_1	b_5	b_7	c_5	e_5	f_5	m	n	n_1	s_5
	k6																		
GST04	16	M5	32	6	20	5	18	35	45	134	55	105	17	128	80	24	20	25	9
GST05	20	M6	40	6	28	6	22.5	43	56	165	70	125	22	154	99	32	26	29	11
GST06	25	M10	50	4	40	8	28	53	68	191	72	160	27	194	115	37	30	43	13.5
GST07	30	M10	60	7.5	45	8	33	64	84	223	80	200	35	245	137	48	40	57	18
GST09	40	M16	80	8.5	63	12	43	84	107	271	105	245	43	296	161	51	45	56	18

[1)] k_2 !



Dimensions

GST□□-1M VCR

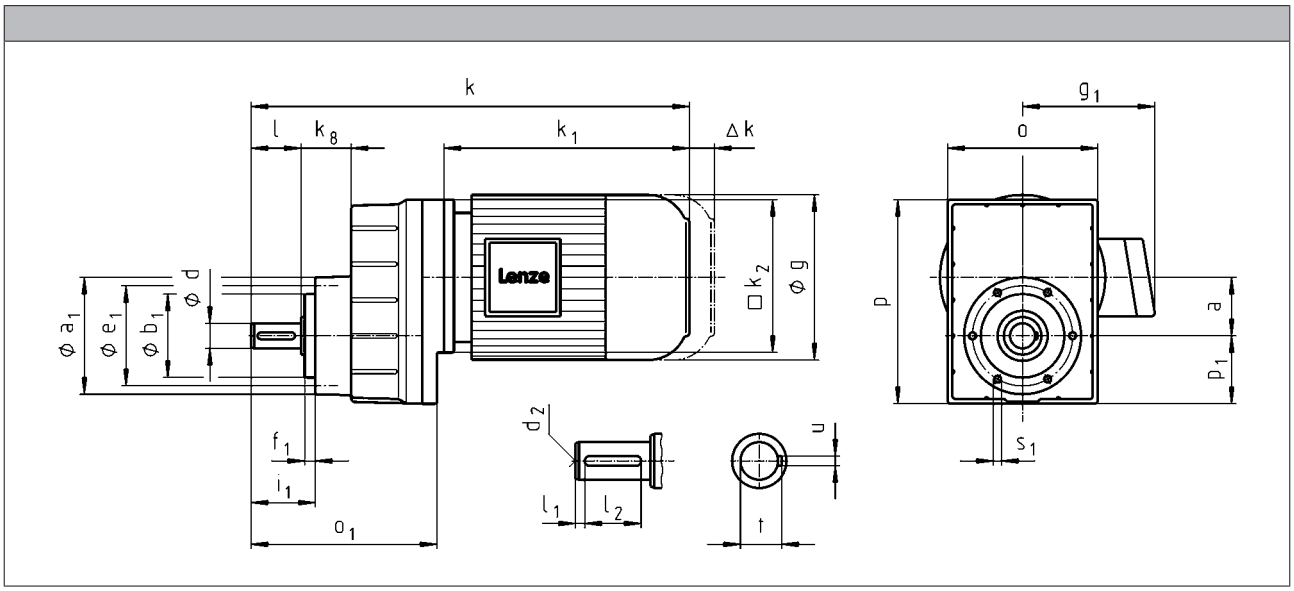



		063C11 063C12 063C31 063C32	063C42	071C11	071C13 071C31 071C32 071C33 071C42	080C13 080C33
g		123		139		156
g_1	MDEMAXX	100		109		150
	MDEMABR	107		118		132
k_1	MDEMAXX	187		207		224.5
k_2		120				145
Δ k	MDEMABR	40		52		73
	MDFMAXX	128				
	MDFMABR	170		165		183
		k				
GST04		331		351		373
GST05			352	372		394
GST06			375		395	417
GST07						446

	a	k_8	o[1)]	p[1)]	p_1
GST04	36	35	100	129	41
GST05	45	43	115	156	51
GST06	56	48	145	194	63
GST07	70	60	180	245	82

	d	d_2	l	l_1	l_2	u	t	i_1	o_1	a_1	b_1	e_1	f_1	s_1
	k6										h7			
GST04	16	M5	32	6	20	5	18	43	134	72	48	61	8	M5x10
GST05	20	M6	40	6	28	6	22.5	52	165	88	58	74	9	M6x10
GST06	25	M10	50	4	40	8	28	64	191	109	70	90	11	M8x14
GST07	30	M10	60	7.5	45	8	33	77	223	140	100	120	13	M10x18

[1)] k_2 !



Dimensions

GST□□-1M VCR

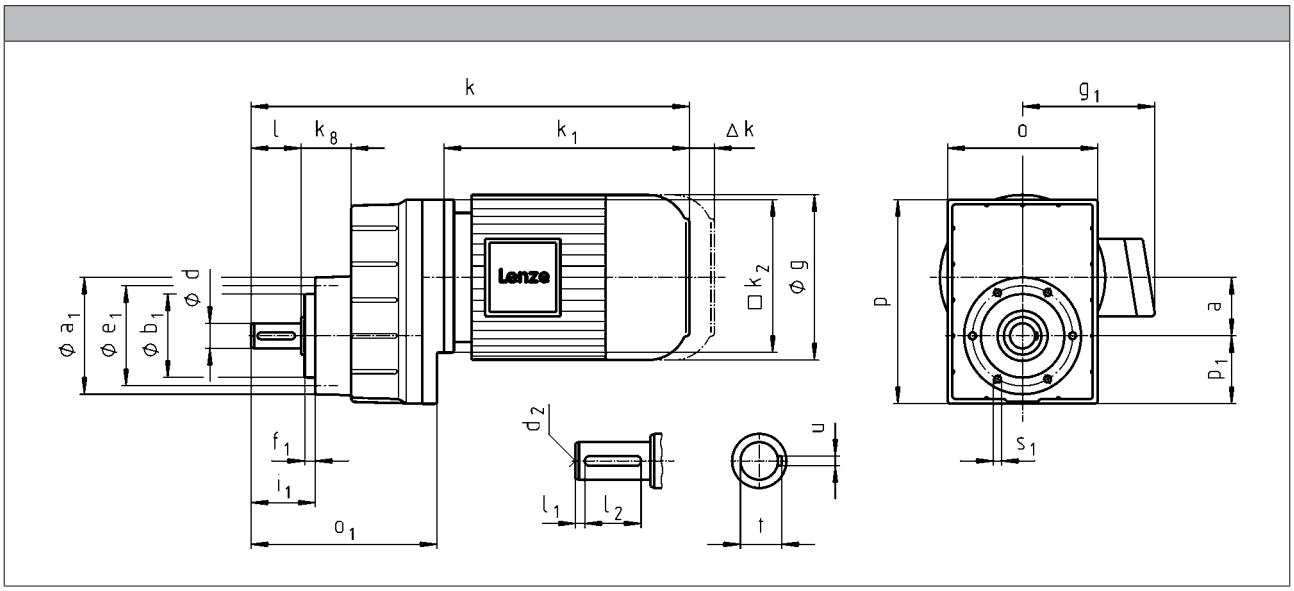

		080C32	090C12	090C32	100C12	100C32
g		156	176		194	
g_1	MHEMAXX	150	152	157	166	
	MHEMABR	132	137		147	
k_1	MHEMAXX	224.5	274		309	324
k_2		145	180			
Δ k	MHEMABR	73	68		76	
	MHFMAXX	128			109	
	MHFMABR	183	181		170	
		k				
GST04		373	433			
GST05		394	454		489	504
GST06		417	477		512	527
GST07		446	506		541	556
GST09			549		584	599



		112C22	132C12 132C22	160C22	160C32	180C12 180C32	180C42
g		218	258	310		348	
g_1	MHEMAXX	176	195	210		230	
	MHEMABR	158	187	210		230	
k_1	MHEMAXX	363	403	457.5	501.5	561	618
k_2		222	265	300			
Δ k	MHEMABR	90	109.5	105		113	
	MHFMAXX	102	115	149			155
	MHFMABR	183	201.5	179		215	
		k					
	GST06	572					
	GST07	601	649	708			
	GST09	644	692	751	795	855	912

	a	k_8	o[1)]	p[1)]	p_1
GST04	36	35	100	129	41
GST05	45	43	115	156	51
GST06	56	48	145	194	63
GST07	70	60	180	245	82
GST09	89	74	222	304	101

	d	d_2	l	l_1	l_2	u	t	i_1	o_1	a_1	b_1	e_1	f_1	s_1
	k6										h7			
GST04	16	M5	32	6	20	5	18	43	134	72	48	61	8	M5x10
GST05	20	M6	40	6	28	6	22.5	52	165	88	58	74	9	M6x10
GST06	25	M10	50	4	40	8	28	64	191	109	70	90	11	M8x14
GST07	30	M10	60	7.5	45	8	33	77	223	140	100	120	13	M10x18
GST09	40	M16	80	8.5	63	12	43	100	271	174	120	145	15	M12x20

[1)] k_2 !



Dimensions

GST□□-1M VCK

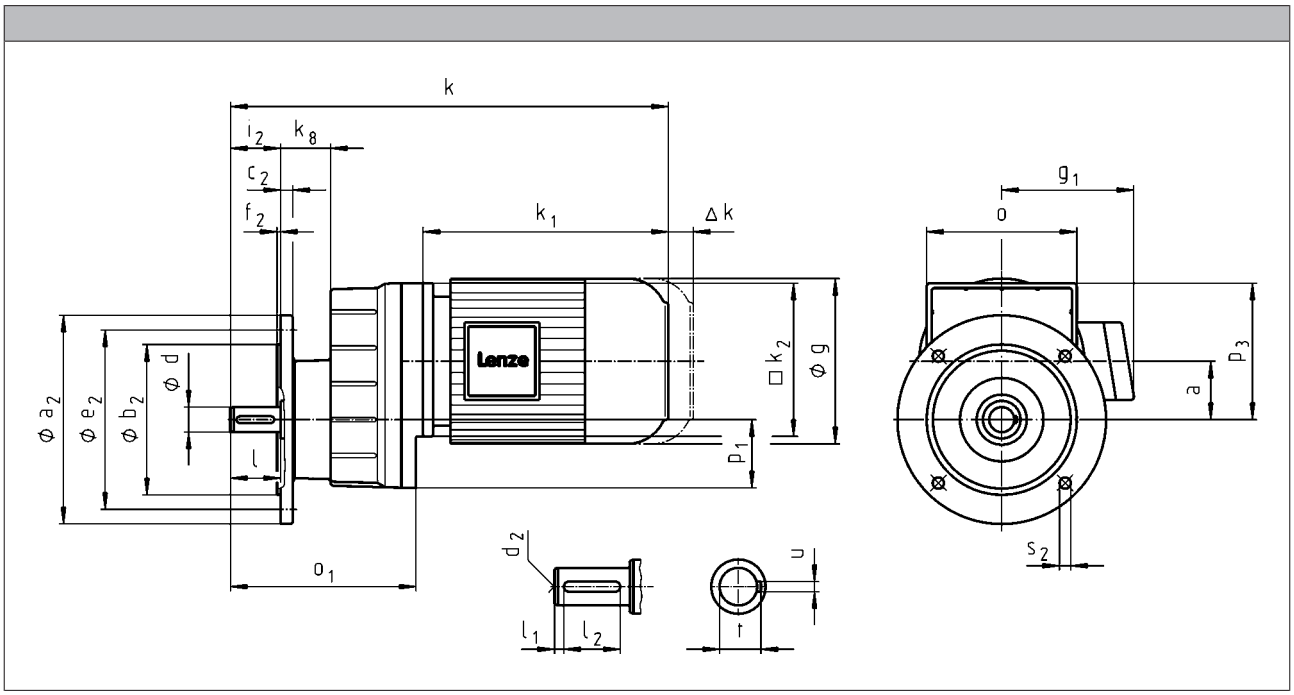



		063C11 063C12 063C31 063C32	063C42	071C11	071C13 071C31 071C32 071C33 071C42	080C13 080C33
g		123		139		156
g_1	MDEMAXX	100		109		150
	MDEMABR	107		118		132
k_1	MDEMAXX	187		207		224.5
k_2		120				145
Δ k	MDEMABR	40		52		73
	MDFMAXX	128				
	MDFMABR	170		165		183
		k				
GST04		331		351		373
GST05			352	372		394
GST06			375		395	417
GST07						446

	a	k_8	o[1)]	p_1	p_3[1)]
GST04	36	35	100	41	88
GST05	45	43	115	51	105
GST06	56	48	145	63	131
GST07	70	60	180	82	164

	d	d_2	l	l_1	l_2	u	t	i_2	o_1	a_2	b_2	c_2	e_2	f_2	s_2
	k6										j7				
GST04	16	M5	32	6	20	5	18	32	134	120 140 160	80 95 110	10 10 10	100 115 130	3 3 3.5	7 9 9
GST05	20	M6	40	6	28	6	22.5	40	165	120 140 160 200	80 95 110 130	10 10 10 12	100 115 130 165	3 3 3.5 3.5	7 9 9 11
GST06	25	M10	50	4	40	8	28	50	191	160 200	110 130	12 12	130 165	3.5 3.5	9 11
GST07	30	M10	60	7.5	45	8	33	60	223	200 250	130 180	14 15	165 215	3.5 4	11 13.5

[1)] k_2 !



Dimensions

GST□□-1M VCK

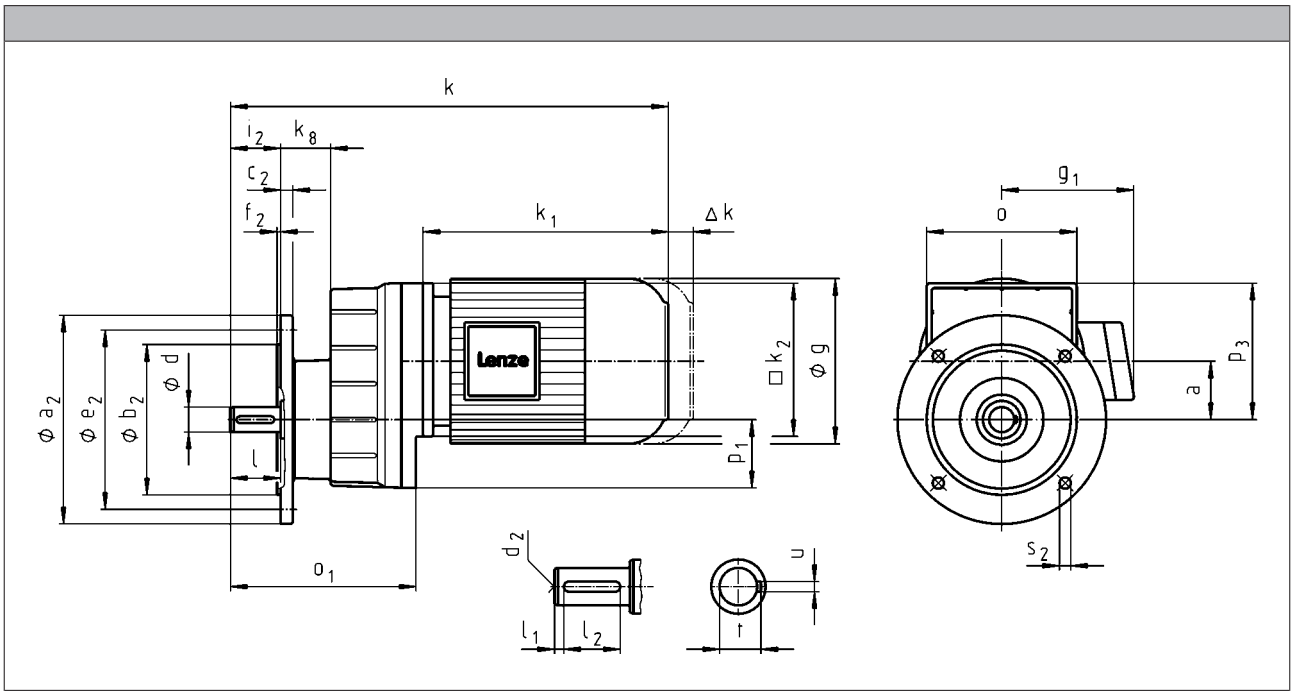

		080C32	090C12	090C32	100C12	100C32
g		156	176		194	
g_1	MHEMAXX	150	152	157	166	
	MHEMABR	132	137		147	
k_1	MHEMAXX	224.5	274		309	324
k_2		145	180			
Δ k	MHEMABR	73	68		76	
	MHFMAXX		128		109	
	MHFMABR	183	181		170	
		k				
GST04		373	433			
GST05		394	454		489	504
GST06		417	477		512	527
GST07		446	506		541	556
GST09			549		584	599



		112C22	132C12 132C22	160C22	160C32	180C12 180C32	180C42
g		218	258	310		348	
g_1	MHEMAXX	176	195	210		230	
	MHEMABR	158	187	210		230	
k_1	MHEMAXX	363	403	457.5	501.5	561	618
k_2		222	265	300			
Δ k	MHEMABR	90	109.5	105		113	
	MHFMAXX	102	115	149			155
	MHFMABR	183	201.5	179		215	
		k					
GST06		572					
GST07		601	649	708			
GST09		644	692	751	795	855	912

	a	k_8	$o^{1)}$	p_1	$p_3{}^{1)}$
GST04	36	35	100	41	88
GST05	45	43	115	51	105
GST06	56	48	145	63	131
GST07	70	60	180	82	164
GST09	89	74	222	101	204

	d	d_2	l	l_1	l_2	u	t	i_2	o_1	a_2	b_2	c_2	e_2	f_2	s_2
	k6										j7				
GST04	16	M5	32	6	20	5	18	32	134	120 140 160	80 95 110	10 10 10	100 115 130	3 3 3.5	7 9 9
GST05	20	M6	40	6	28	6	22.5	40	165	120 140 160 200	80 95 110 130	10 10 10 12	100 115 130 165	3 3 3.5 3.5	7 9 9 11
GST06	25	M10	50	4	40	8	28	50	191	160 200	110 130	12 12	130 165	3.5 3.5	9 11
GST07	30	M10	60	7.5	45	8	33	60	223	200 250	130 180	14 15	165 215	3.5 4	11 13.5
GST09	40	M16	80	8.5	63	12	43	80	271	250 300	180 230	16 18	215 265	4 4	13.5 13.5

[1] k_2 !



Dimensions

GST□□-2M VBR

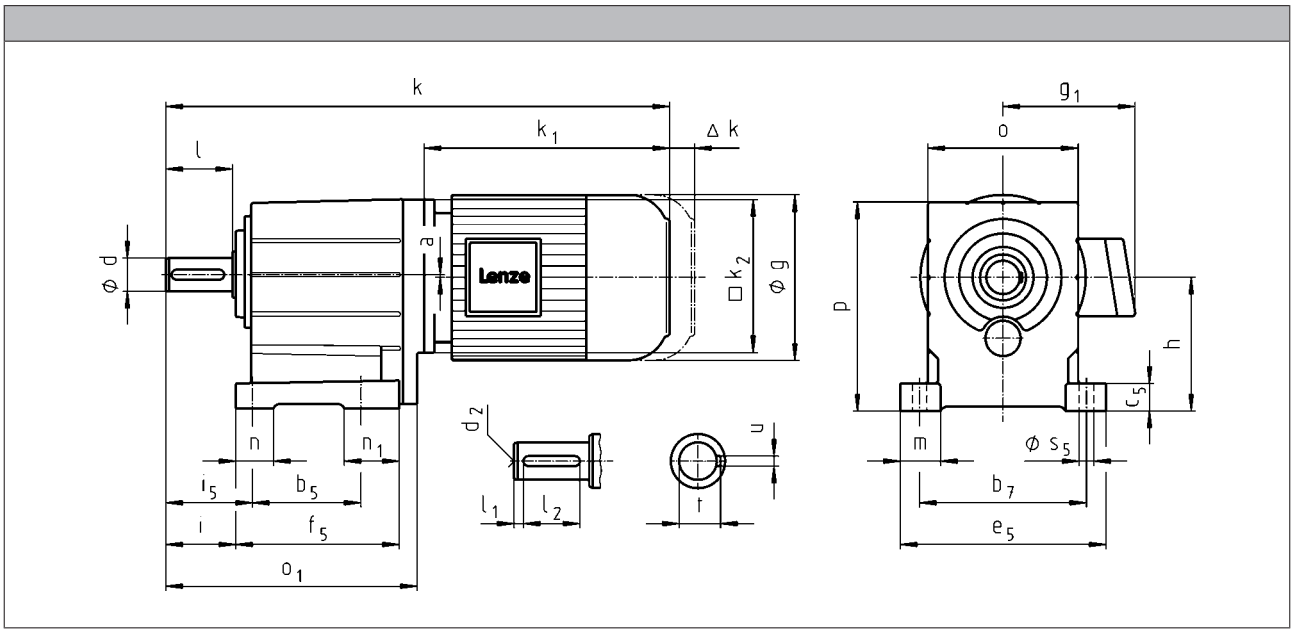

		063C02	063C11	063C12	063C22	063C31	063C32
g		123					
g_1	MDEMAXX MDSMAXX	100					
	MDEMABR MDSMABR	107					
k_1	MDEMAXX MDSMAXX	156	187		156	187	
k_2		100	120		100	120	
Δ k	MDEMABR MDSMABR	71	40		71	40	
	MDFMAXX		128			128	
	MDFMABR		170			170	
		k					
GST03		298		329	298		329
GST04			371			371	

6.4



		063C42	071C11	071C13 071C31	071C32	071C33	071C42	080C13 080C33
g		123	139					156
g_1	MDEMAXX MDSMAXX	100	109					150
	MDEMABR MDSMABR	107	118					132
k_1	MDEMAXX MDSMAXX	187	207					224.5
k_2		120						145
Δ k	MDEMABR MDSMABR	40	52					73
	MDFMAXX	128						
	MDFMABR	170	165					183
		k						
GST03		329			349		349	
GST04		371	391					413
GST05		401	421					443
GST06		427		447				469
GST07								525

	a	h[1)]	o[1)]	p[1)]
GST03	2	65	90	101
GST04	0	80	100	132
GST05	1	100	115	158.5
GST06	2	125	145	198
GST07	3	160	180	251

	d	d_2	l	l_1	l_2	u	t	i	i_5	o_1	b_5	b_7	c_5	e_5	f_5	m	n	n_1	s_5
	k6																		
GST03	14 20	M5 M6	28 40	4 5	20 28	5 6	16 22.5	34 46	40 52	127 139	60	91	11	105	84	20			6.6
GST04	20	M6	40	5	28	6	22.5	43	53	174	76	105	18	129	112	24.5	20	36	9
GST05	25	M10	50	4	40	8	28	53	66	214	90	125	23	155	139	32.5	26	49	11
GST06	30	M10	60	6	45	8	33	64	79	243	106	160	28	196	157	38	35	52	13.5
GST07	40	M16	80	7	63	12	43	84	104	302	130	200	34	247	196	48.5	45	66	18

[1)] k_2 !



Dimensions

GST□□-2M VBR

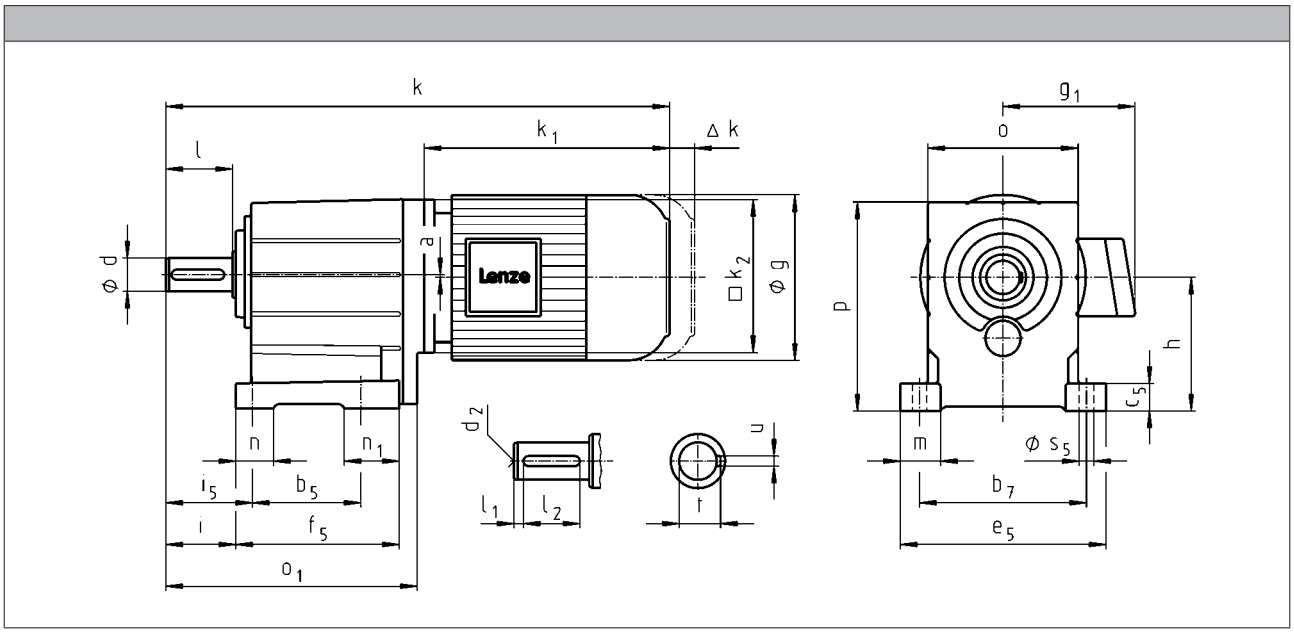

		080C32	090C12	090C32	100C12	100C32	112C22
g		156	176		194		218
g_1	MHEMAXX	150	152	157	166		176
	MHEMABR	132	137		147		158
k_1	MHEMAXX	224.5	274		309	324	363
k_2		145	180				222
Δ k	MHEMABR	73	68		76		90
	MHFMAXX		128		109		102
	MHFMABR	183	181		170		183
		k					
GST04		413	473				
GST05		443	503		538	553	
GST06		469	529		564	579	624
GST07		525	585		620	635	680
GST09			648		683	698	743
GST11					740	755	800
GST14							890



		132C12 132C22	160C22	160C32	180C12 180C32	180C42	225C12 225C22
g		258	310		348		447
g_1	MHEMAXX	195	210		230		346
	MHEMABR	187	210		230		346
k_1	MHEMAXX	403	457.5	501.5	561	618	848
k_2		265	300				
Δ k	MHEMABR	109.5	105		113		
	MHFMAXX	115	149			155	213
	MHFMABR	201.5	179		215		213
		k					
GST06		672					
GST07		728	787	831			
GST09		791	850	894	954	1011	
GST11		848	907	951	1011	1068	1298
GST14		938	997	1041	1101	1158	1388

	a	h[1)]	o[1)]	p[1)]
GST04	0	80	100	132
GST05	1	100	115	158.5
GST06	2	125	145	198
GST07	3	160	180	251
GST09	4	200	222	311
GST11	4	250	270	385
GST14	6	315	328	479

	d	d	d_2	l	l_1	l_2	u	t	i	i_5	o_1	b_5	b_7	c_5	e_5	f_5	m	n	n_1	s_5
	k6	m6																		
GST04	20		M6	40	5	28	6	22.5	43	53	174	76	105	18	129	112	24.5	20	36	9
GST05	25		M10	50	4	40	8	28	53	66	214	90	125	23	155	139	32.5	26	49	11
GST06	30		M10	60	6	45	8	33	64	79	243	106	160	28	196	157	38	35	52	13.5
GST07	40		M16	80	7	63	12	43	84	104	302	130	200	34	247	196	48.5	45	66	18
GST09	50		M16	100	8	80	14	53.5	105	127.5	370	165	245	44	298	239	54	48	74	18
GST11		60	M20	120	8	100	18	64	125	155	433	200	300	54	368	280	69	65	80	22
GST14		80	M20	160	15	125	22	85	165	200	533	250	380	65	460	340	85	85	91	26

[1)] k_2 !



Dimensions

GST□□-2M VCR

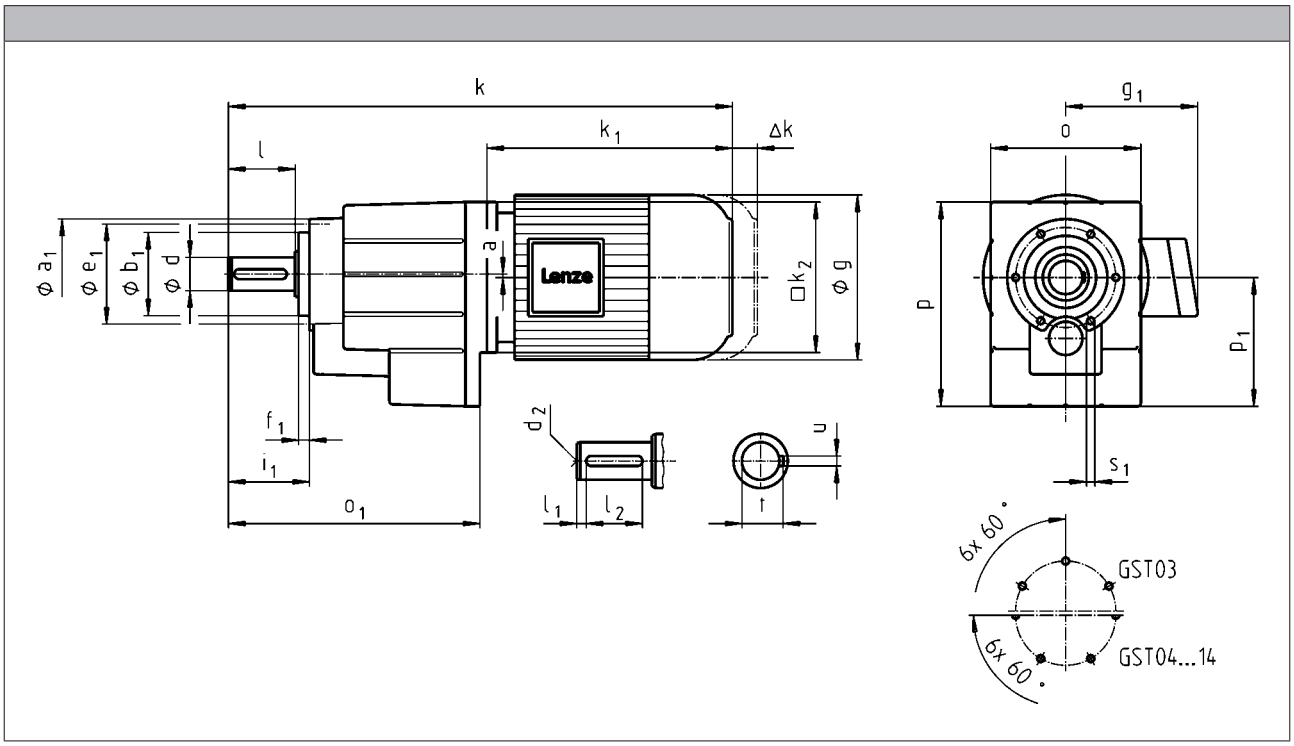

		063C02	063C11	063C12	063C22	063C31	063C32
g		123					
g_1	MDEMAXX MDSMAXX	100					
	MDEMABR MDSMABR	107					
k_1	MDEMAXX MDSMAXX	156	187		156	187	
k_2		100	120		100	120	
Δ k	MDEMABR MDSMABR	71	40		71	40	
	MDFMAXX		128			128	
	MDFMABR		170			170	
		k					
GST03		298		329	298		329
GST04			371			371	

6.4



		063C42	071C11	071C13 071C31	071C32	071C33	071C42	080C13 080C33
g		123	139					156
g_1	MDEMAXX MDSMAXX	100	109					150
	MDEMABR MDSMABR	107	118					132
k_1	MDEMAXX MDSMAXX	187	207					224.5
k_2		120						145
Δ k	MDEMABR MDSMABR	40	52					73
	MDFMAXX	128						
	MDFMABR	170	165					183
		k						
GST03		329			349		349	
GST04		371	391					413
GST05		401	421					443
GST06		427		447				469
GST07								525

	a	o[1)]	p[1)]	p_1
GST03	2	90	100	64
GST04	0	100	129	77
GST05	1	115	156	98
GST06	2	145	194	121
GST07	3	180	245	155

	d	d_2	l	l_1	l_2	u	t	i_1	o_1	a_1	b_1	e_1	f_1	s_1
	k6										h7			
GST03	14 20	M5 M6	28 40	4 5	20 28	5 6	16 22.5	39 51	127 139	71	48	61	8	M5x10
GST04	20	M6	40	5	28	6	22.5	51	174	72	48	61	8	M5x10
GST05	25	M10	50	4	40	8	28	62	214	88	58	74	9	M6x12
GST06	30	M10	60	6	45	8	33	74	243	109	70	90	10	M8x14
GST07	40	M16	80	7	63	12	43	97	302	140	100	120	13	M10x18

[1)] k_2 !



Dimensions

GST□□-2M VCR

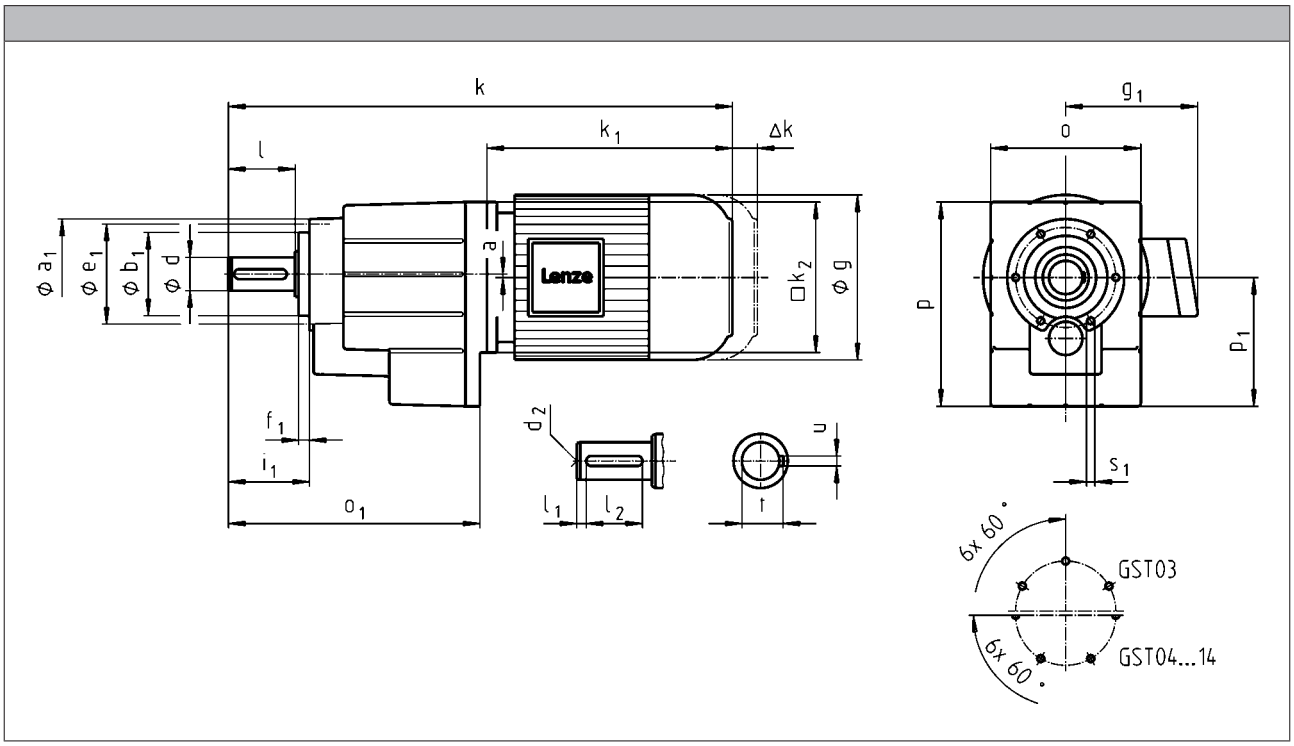

		080C32	090C12	090C32	100C12	100C32	112C22
g		156	176		194		218
g_1	MHEMAXX	150	152	157	166		176
	MHEMABR	132	137		147		158
k_1	MHEMAXX	224.5	274		309	324	363
k_2		145	180				222
Δ k	MHEMABR	73	68		76		90
	MHFMAXX		128		109		102
	MHFMABR	183	181		170		183
		k					
	GST04	413	473				
	GST05	443	503		538	553	
	GST06	469	529		564	579	624
	GST07	525	585		620	635	680
	GST09		648		683	698	743
	GST11				740	755	800
	GST14						890



		132C12 132C22	160C22	160C32	180C12 180C32	180C42	225C12 225C22
g		258	310		348		447
g_1	MHEMAXX	195	210		230		346
	MHEMABR	187	210		230		346
k_1	MHEMAXX	403	457.5	501.5	561	618	848
k_2		265	300				
Δ k	MHEMABR	109.5	105		113		
	MHFMAXX	115	149			155	213
	MHFMABR	201.5	179		215		213
		k					
GST06		672					
GST07		728	787	831			
GST09		791	850	894	954	1011	
GST11		848	907	951	1011	1068	1298
GST14		938	997	1041	1101	1158	1388

	a	o[1)]	p[1)]	p_1
GST04	0	100	129	77
GST05	1	115	156	98
GST06	2	145	194	121
GST07	3	180	245	155
GST09	4	222	304	194
GST11	4	270	378	243
GST14	6	328	470	306

	d k6	d m6	d_2	l	l_1	l_2	u	t	i_1	o_1	a_1	b_1 h7	e_1	f_1	s_1
GST04	20		M6	40	5	28	6	22.5	51	174	72	48	61	8	M5x10
GST05	25		M10	50	4	40	8	28	62	214	88	58	74	9	M6x12
GST06	30		M10	60	6	45	8	33	74	243	109	70	90	10	M8x14
GST07	40		M16	80	7	63	12	43	97	302	140	100	120	13	M10x18
GST09	50		M16	100	8	80	14	53.5	120	370	174	120	145	15	M12x20
GST11		60	M20	120	8	100	18	64	143	433	215	150	185	18	M16x26
GST14		80	M20	160	15	125	22	85	187	533	265	195	230	22	M20x34

[1)] k_2 !



Dimensions

GST□□-2M VCK

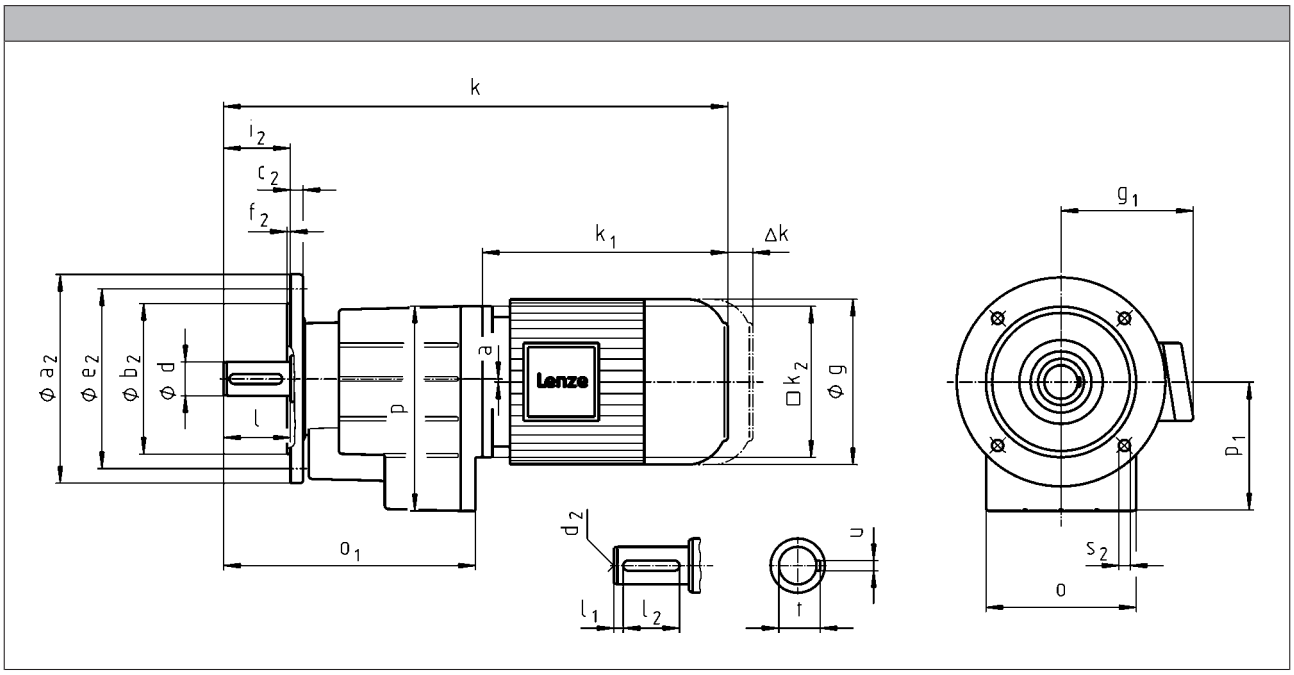

		063C02	063C11	063C12	063C22	063C31	063C32
g		123					
g_1	MDEMAXX MDSMAXX	100					
	MDEMABR MDSMABR	107					
k_1	MDEMAXX MDSMAXX	156	187		156	187	
k_2		100	120		100	120	
Δ k	MDEMABR MDSMABR	71	40		71	40	
	MDFMAXX		128			128	
	MDFMABR		170			170	
		k					
GST03		298		329	298		329
GST04			371			371	

6.4



		063C42	071C11	071C13 071C31	071C32	071C33	071C42	080C13 080C33
g		123	139					156
g_1	MDEMAXX MDSMAXX	100	109					150
	MDEMABR MDSMABR	107	118					132
k_1	MDEMAXX MDSMAXX	187	207					224.5
k_2		120						145
Δ k	MDEMABR MDSMABR	40	52					73
	MDFMAXX	128						
	MDFMABR	170	165					183
		k						
GST03		329			349		349	
GST04		371	391					413
GST05		401	421					443
GST06		427		447				469
GST07								525

	a	o[1)]	p[1)]	p_1
GST03	2	90	100	64
GST04	0	100	129	77
GST05	1	115	156	98
GST06	2	145	194	121
GST07	3	180	245	155

	d	d_2	l	l_1	l_2	u	t	i_2	o_1	a_2	b_2	c_2	e_2	f_2	s_2
	k6										j7				
GST03	14 20	M5 M6	28 40	4 5	20 28	5 6	16 22.5	28 40	127 139	120 140 160	80 95 110	10 10 10	100 115 130	3 3 3.5	7 9 9
GST04	20	M6	40	5	28	6	22.5	40	174	120 140 160	80 95 110	10 10 10	100 115 130	3 3 3.5	7 9 9
GST05	25	M10	50	4	40	8	28	50	214	120 140 160 200	80 95 110 130	10 10 10 12	100 115 130 165	3 3 3.5 3.5	7 9 9 11
GST06	30	M10	60	6	45	8	33	60	243	160 200	110 130	12 12	130 165	3.5 3.5	9 11
GST07	40	M16	80	7	63	12	43	80	302	200 250	130 180	14 15	165 215	3.5 4	11 13.5

[1)] k_2 !



Dimensions

GST□□-2M VCK

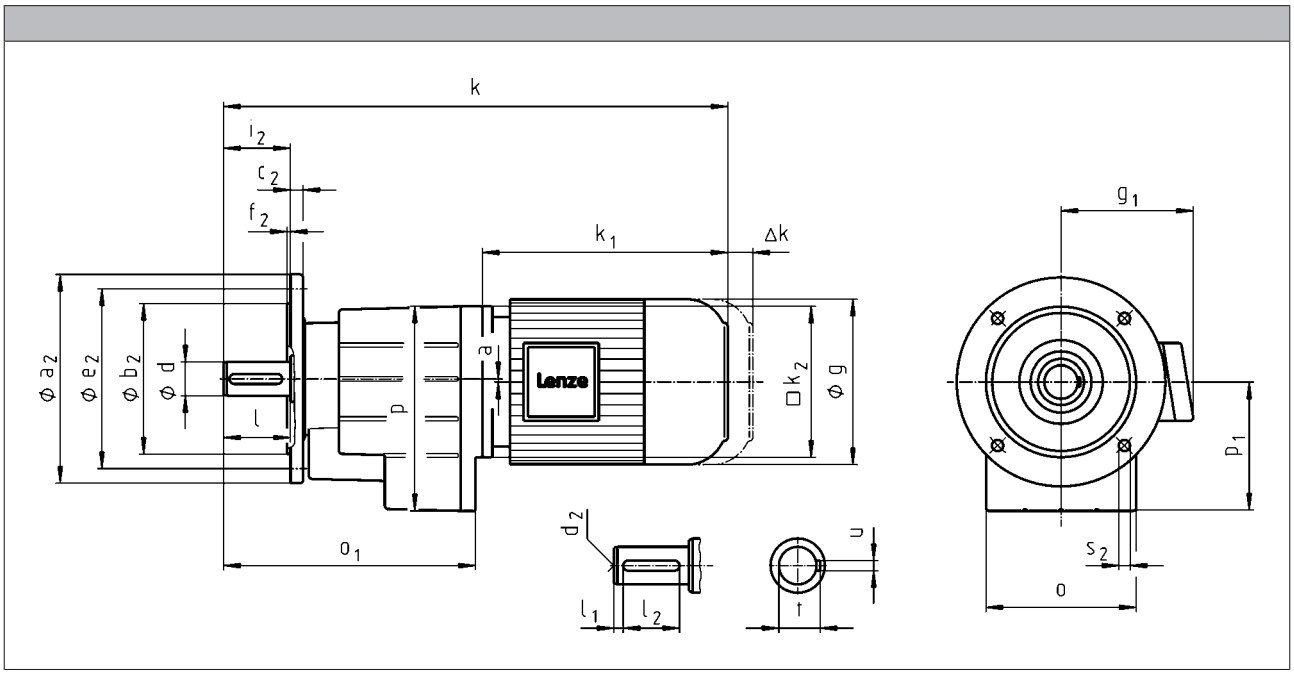

		080C32	090C12	090C32	100C12	100C32	112C22
g		156	176		194		218
g_1	MHEMAXX	150	152	157	166		176
	MHEMABR	132	137		147		158
k_1	MHEMAXX	224.5	274		309	324	363
k_2		145	180				222
Δ k	MHEMABR	73	68		76		90
	MHFMAXX		128		109		102
	MHFMABR	183	181		170		183
		k					
	GST04	413	473				
	GST05	443	503		538	553	
	GST06	469	529		564	579	624
	GST07	525	585		620	635	680
	GST09		648		683	698	743
	GST11				740	755	800
	GST14						890

6.4



		132C12 132C22	160C22	160C32	180C12 180C32	180C42	225C12 225C22
g		258	310		348		447
g_1	MHEMAXX	195	210		230		346
	MHEMABR	187	210		230		346
k_1	MHEMAXX	403	457.5	501.5	561	618	848
k_2		265	300				
Δ k	MHEMABR	109.5	105		113		
	MHFMAXX	115	149			155	213
	MHFMABR	201.5	179		215		213
		k					
GST06		672					
GST07		728	787	831			
GST09		791	850	894	954	1011	
GST11		848	907	951	1011	1068	1298
GST14		938	997	1041	1101	1158	1388

	a	o[1)]	p[1)]	p_1
GST04	0	100	129	77
GST05	1	115	156	98
GST06	2	145	194	121
GST07	3	180	245	155
GST09	4	222	304	194
GST11	4	270	378	243
GST14	6	328	470	306

	d	d	d_2	l	l_1	l_2	u	t	i_2	o_1	a_2	b_2	c_2	e_2	f_2	s_2
	k6	m6										j7				
GST04	20		M6	40	5	28	6	22.5	40	174	120 140 160	80 95 110	10 10 10	100 115 130	3 3 3.5	7 9 9
GST05	25		M10	50	4	40	8	28	50	214	120 140 160 200	80 95 110 130	10 10 10 12	100 115 130 165	3 3 3.5 3.5	7 9 9 11
GST06	30		M10	60	6	45	8	33	60	243	160 200	110 130	12 12	130 165	3.5 3.5	9 11
GST07	40		M16	80	7	63	12	43	80	302	200 250	130 180	14 15	165 215	3.5 4	11 13.5
GST09	50		M16	100	8	80	14	53.5	100	370	250 300	180 230	16 18	215 265	4 4	13.5 13.5
GST11		60	M20	120	8	100	18	64	120	433	300 350	230 250	18 20	265 300	4 5	14 18
GST14		80	M20	160	15	125	22	85	160	533	350 400	250 300	22 24	300 350	5 5	18 18

[1)] k_2 !



Dimensions

GST□□-3M VBR

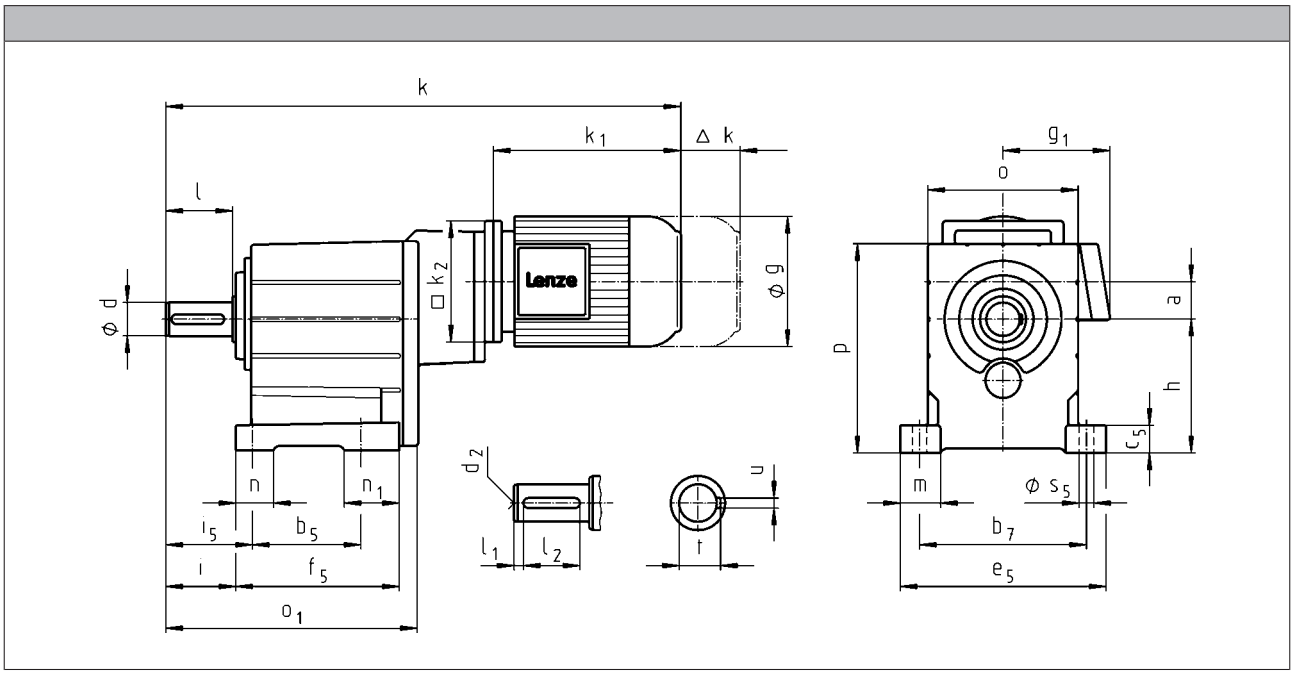



		063C11 063C12 063C31 063C32	063C42	071C11 071C13 071C31 071C32 071C33 071C42	080C13	080C33
g		123		139	156	
g_1	MDEMAXX	100		109	150	
	MDEMABR	107		118	132	
k_1	MDEMAXX	187		207	224.5	
k_2		120			145	
Δ k	MDEMABR	40		52	73	
	MDFMAXX	128				
	MDFMABR	170		165	183	
		k				
GST05		477		497	520	
GST06		520		540	563	
GST07			587	607	630	
GST09			668	688	711	
GST11					787	

	a	h	o[1)]	p[1)]
GST05	35	100	115	158.5
GST06	34	125	145	198
GST07	42	160	180	251
GST09	52	200	222	311
GST11	66	250	270	385

	d	d	d_2	l	l_1	l_2	u	t	i	i_5	o_1	b_5	b_7	c_5	e_5	f_5	m	n	n_1	s_5
	k6	m6																		
GST05	25		M10	50	4	40	8	28	53	66	208	90	125	23	155	139	32.5	26	49	11
GST06	30		M10	60	6	45	8	33	64	79	240	106	160	28	196	157	38	35	52	13.5
GST07	40		M16	80	7	63	12	43	84	104	302	130	200	34	247	196	48.5	45	66	18
GST09	50		M16	100	8	80	14	53.5	105	127.5	370	165	245	44	298	239	54	48	74	18
GST11		60	M20	120	8	100	18	64	125	155	433	200	300	54	368	280	69	65	80	22

[1)] k_2 !



Dimensions

GST□□-3M VBR

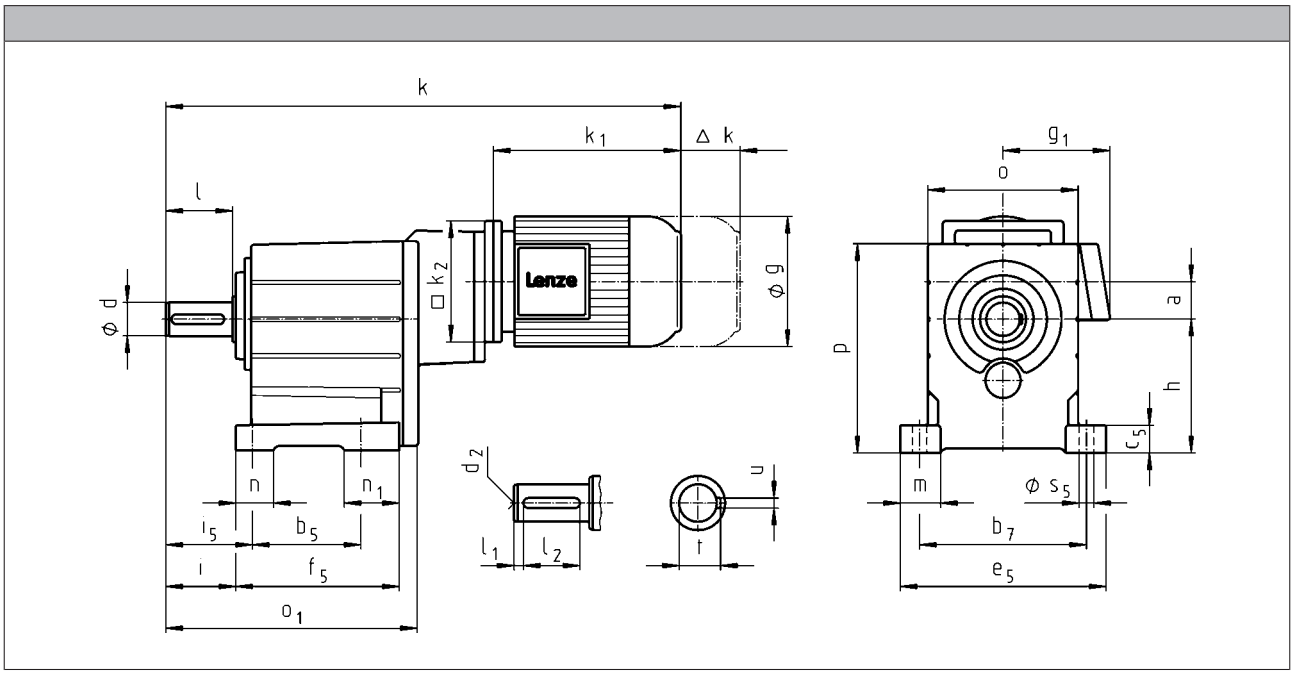

		080C32	090C12	090C32	100C12	100C32
g		156	176		194	
g_1	MHEMAXX	150	152	157	166	
	MHEMABR	132	137		147	
k_1	MHEMAXX	224.5	274		309	324
k_2		145	180			
Δ k	MHEMABR	73	68		76	
	MHFMAXX	128			109	
	MHFMABR	183	181		170	
		k				
GST06		563	622			
GST07		630	689		724	739
GST09		711	770		805	820
GST11		787	846		881	896
GST14			970		1005	1020



		112C22	132C12 132C22	160C22	160C32	180C12 180C32
g		218	258	310		348
g_1	MHEMAXX	176	195	210		230
	MHEMABR	158	187	210		230
k_1	MHEMAXX	363	403	457.5	501.5	561
k_2		222	265	300		
Δ k	MHEMABR	90	109.5	105		113
	MHFMAXX	102	115	149		
	MHFMABR	183	201.5	179		215
		k				
	GST09	865				
	GST11	941	989			
	GST14	1065	1113	1173	1217	1276

	a	h	o[1)]	p[1)]
GST06	34	125	145	198
GST07	42	160	180	251
GST09	52	200	222	311
GST11	66	250	270	385
GST14	83	315	328	479

	d	d	d_2	l	l_1	l_2	u	t	i	i_5	o_1	b_5	b_7	c_5	e_5	f_5	m	n	n_1	s_5
	k6	m6																		
GST06	30		M10	60	6	45	8	33	64	79	240	106	160	28	196	157	38	35	52	13.5
GST07	40		M16	80	7	63	12	43	84	104	302	130	200	34	247	196	48.5	45	66	18
GST09	50		M16	100	8	80	14	53.5	105	127.5	370	165	245	44	298	239	54	48	74	18
GST11		60	M20	120	8	100	18	64	125	155	433	200	300	54	368	280	69	65	80	22
GST14		80	M20	160	15	125	22	85	165	200	533	250	380	65	460	340	85	85	91	26

[1)] k_2 !



Dimensions

GST□□-3M VCR

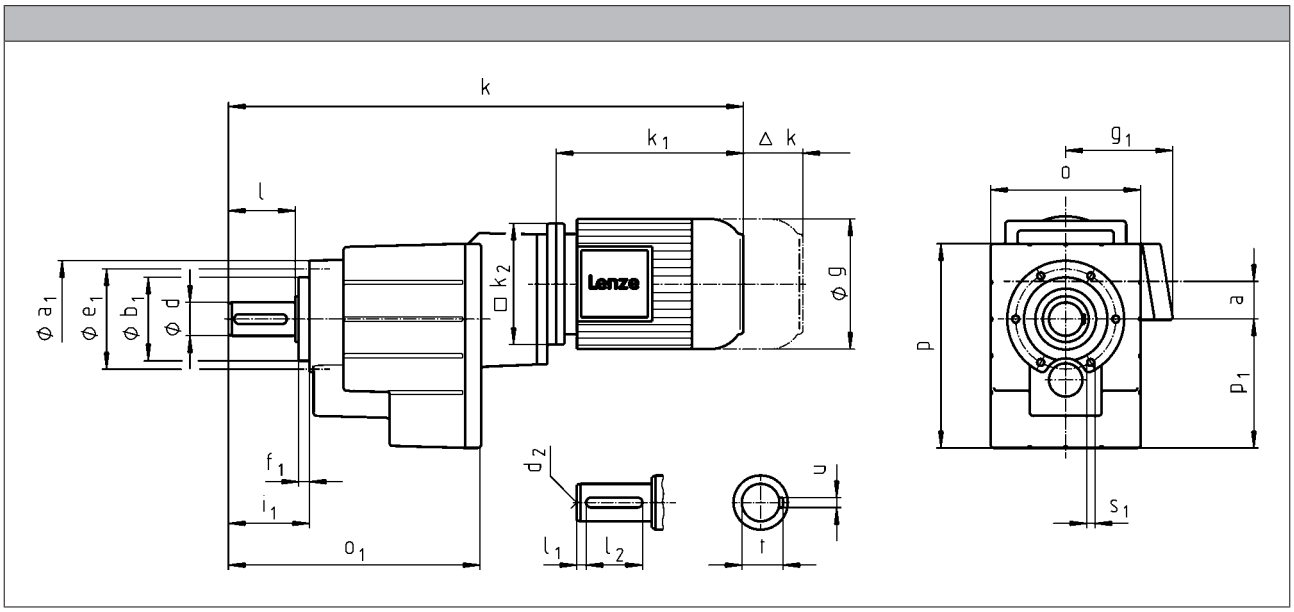



		063C11 063C12 063C31 063C32	063C42	071C11 071C13 071C31 071C32 071C33 071C42	080C13	080C33
g		123		139	156	
g_1	MDEMAXX	100		109	150	
	MDEMABR	107		118	132	
k_1	MDEMAXX	187		207	224.5	
k_2		120			145	
Δ k	MDEMABR	40		52	73	
	MDFMAXX			128		
	MDFMABR	170		165	183	
		k				
GST05		477		497	520	
GST06		520		540	563	
GST07			587	607	630	
GST09			668	688	711	
GST11					787	

	a	o[1)]	p[1)]	p_1
GST05	35	115	156	98
GST06	34	145	194	121
GST07	42	180	245	155
GST09	52	222	304	194
GST11	66	270	378	243

	d	d	d_2	l	l_1	l_2	u	t	i_1	o_1	a_1	b_1	e_1	f_1	s_1
	k6	m6										h7			
GST05	25		M10	50	4	40	8	28	62	208	88	58	74	9	M6x12
GST06	30		M10	60	6	45	8	33	74	240	109	70	90	10	M8x14
GST07	40		M16	80	7	63	12	43	97	302	140	100	120	13	M10x18
GST09	50		M16	100	8	80	14	53.5	120	370	174	120	145	15	M12x20
GST11		60	M20	120	8	100	18	64	143	433	215	150	185	18	M16x26

[1)] k_2 !



Dimensions

GST□□-3M VCR

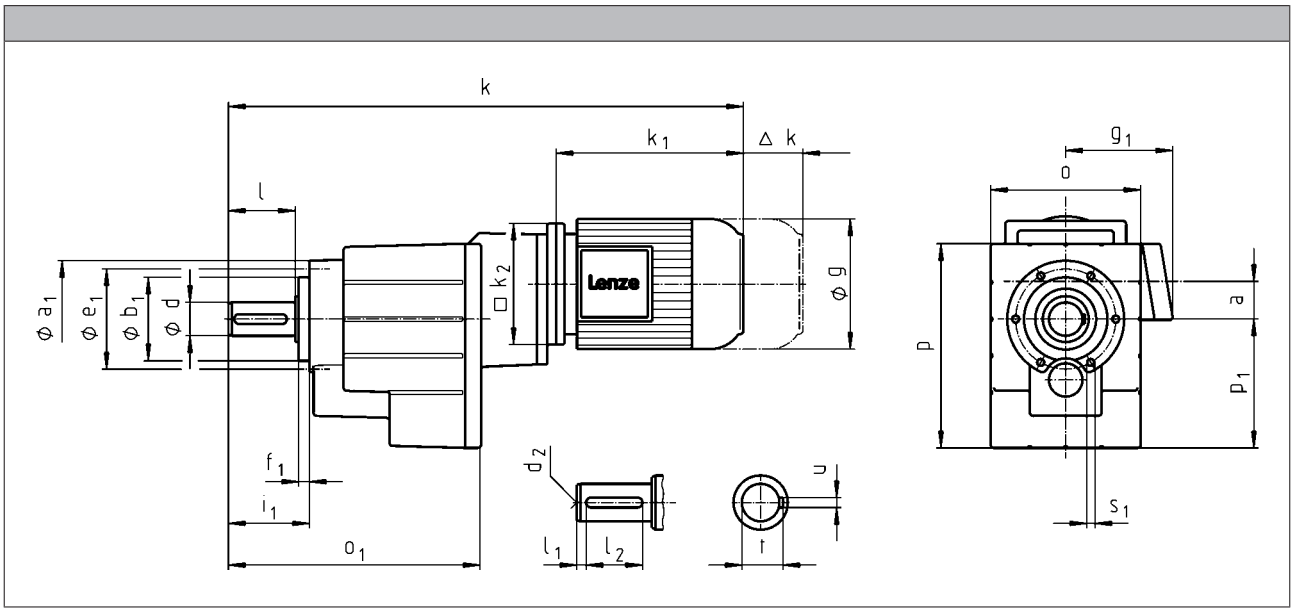

		080C32	090C12	090C32	100C12	100C32
g		156	176		194	
g_1	MHEMAXX	150	152	157	166	
	MHEMABR	132	137		147	
k_1	MHEMAXX	224.5	274		309	324
k_2		145	180			
Δ k	MHEMABR	73	68		76	
	MHFMAXX	128			109	
	MHFMABR	183	181		170	
		k				
GST06		563	622			
GST07		630	689		724	739
GST09		711	770		805	820
GST11		787	846		881	896
GST14			970		1005	1020



		112C22	132C12 132C22	160C22	160C32	180C12 180C32
g		218	258	310		348
g_1	MHEMAXX	176	195	210		230
	MHEMABR	158	187	210		230
k_1	MHEMAXX	363	403	457.5	501.5	561
k_2		222	265	300		
Δ k	MHEMABR	90	109.5	105		113
	MHFMAXX	102	115	149		
	MHFMABR	183	201.5	179		215
		k				
	GST09	865				
	GST11	941	989			
	GST14	1065	1113	1173	1217	1276

	a	o[1)]	p[1)]	p_1
GST06	34	145	194	121
GST07	42	180	245	155
GST09	52	222	304	194
GST11	66	270	378	243
GST14	83	328	470	306

	d	d	d_2	l	l_1	l_2	u	t	i_1	o_1	a_1	b_1	e_1	f_1	s_1
	k6	m6										h7			
GST06	30		M10	60	6	45	8	33	74	240	109	70	90	10	M8x14
GST07	40		M16	80	7	63	12	43	97	302	140	100	120	13	M10x18
GST09	50		M16	100	8	80	14	53.5	120	370	174	120	145	15	M12x20
GST11		60	M20	120	8	100	18	64	143	433	215	150	185	18	M16x26
GST14		80	M20	160	15	125	22	85	187	533	265	195	230	22	M20x34

[1)] k_2 !



Dimensions

GST□□-3M VCK

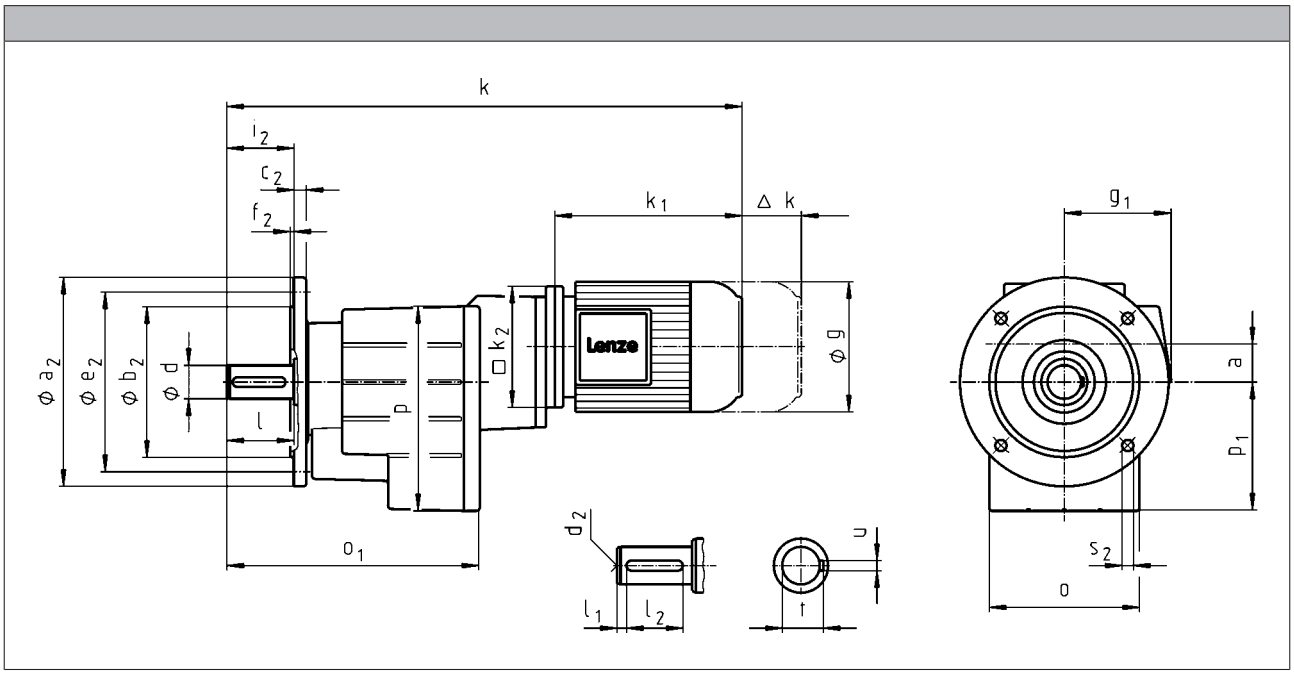



		063C11 063C12 063C31 063C32	063C42	071C11 071C13 071C31 071C32 071C33 071C42	080C13	080C33
g		123		139	156	
g_1	MDEMAXX	100		109	150	
	MDEMABR	107		118	132	
k_1	MDEMAXX	187		207	224.5	
k_2		120			145	
Δ k	MDEMABR	40		52	73	
	MDFMAXX	128				
	MDFMABR	170		165	183	
		k				
GST05		477		497	520	
GST06		520		540	563	
GST07			587	607	630	
GST09			668	688	711	
GST11					787	

	a	o[1)]	p[1)]	p_1
GST05	35	115	156	98
GST06	34	145	194	121
GST07	42	180	245	155
GST09	52	222	304	194
GST11	66	270	378	243

	d	d	d_2	l	l_1	l_2	u	t	i_2	o_1	a_2	b_2	c_2	e_2	f_2	s_2
	k6	m6										j7				
GST05	25		M10	50	4	40	8	28	50	208	120 140 160 200	80 95 110 130	10 10 10 12	100 115 130 165	3 3 3.5 3.5	7 9 9 11
GST06	30		M10	60	6	45	8	33	60	240	160 200	110 130	12 12	130 165	3.5 3.5	9 11
GST07	40		M16	80	7	63	12	43	80	302	200 250	130 180	14 15	165 215	3.5 4	11 13.5
GST09	50		M16	100	8	80	14	53.5	100	370	250 300	180 230	16 18	215 265	4 4	13.5 13.5
GST11		60	M20	120	8	100	18	64	120	433	300 350	230 250	18 20	265 300	4 5	14 18

[1)] k_2 !



Dimensions

GST□□-3M VCK

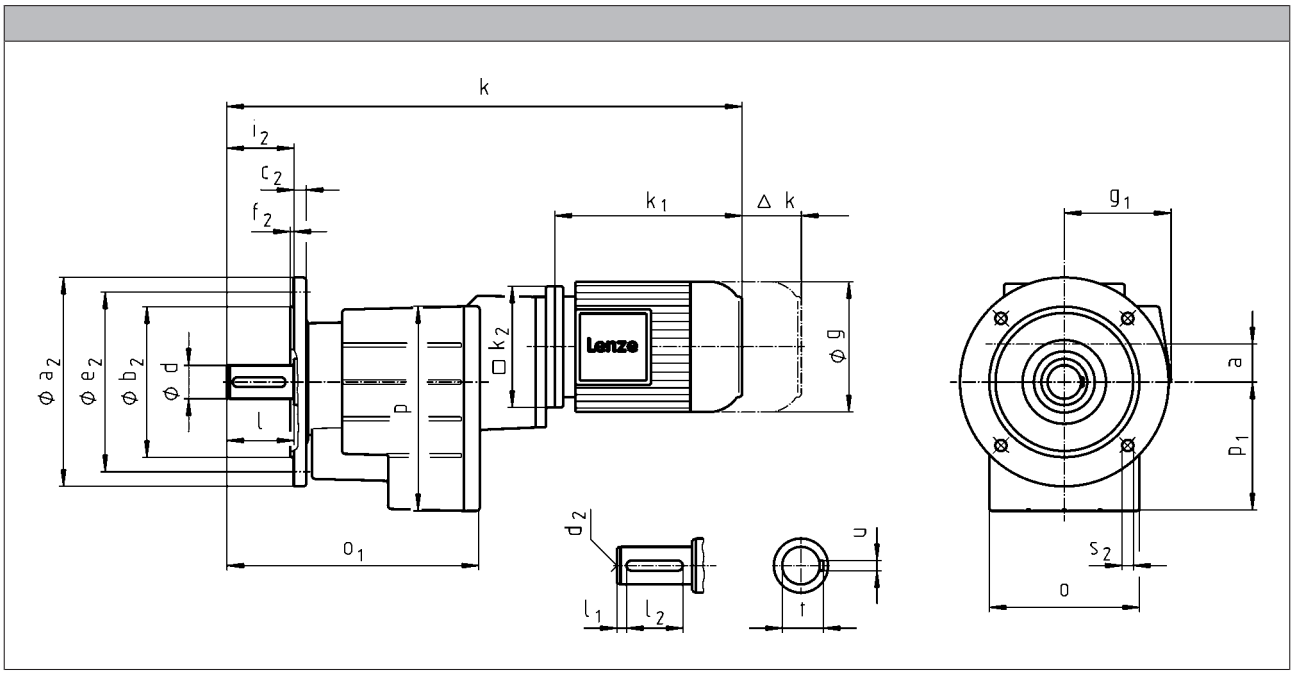

		080C32	090C12	090C32	100C12	100C32
g		156	176		194	
g_1	MHEMAXX	150	152	157	166	
	MHEMABR	132	137		147	
k_1	MHEMAXX	224.5	274		309	324
k_2		145	180			
Δ k	MHEMABR	73	68		76	
	MHFMAXX	128			109	
	MHFMABR	183	181		170	
		k				
GST06		563	622			
GST07		630	689		724	739
GST09		711	770		805	820
GST11		787	846		881	896
GST14			970		1005	1020

6.4



		112C22	132C12 132C22	160C22	160C32	180C12 180C32
g		218	258	310		348
g_1	MHEMAXX	176	195	210		230
	MHEMABR	158	187	210		230
k_1	MHEMAXX	363	403	457.5	501.5	561
k_2		222	265	300		
Δ k	MHEMABR	90	109.5	105		113
	MHFMAXX	102	115	149		
	MHFMABR	183	201.5	179		215
		k				
	GST09	865				
	GST11	941	989			
	GST14	1065	1113	1173	1217	1276

	a	o[1)]	p[1)]	p_1
GST06	34	145	194	121
GST07	42	180	245	155
GST09	52	222	304	194
GST11	66	270	378	243
GST14	83	328	470	306

	d	d	d_2	l	l_1	l_2	u	t	i_2	o_1	a_2	b_2	c_2	e_2	f_2	s_2
	k6	m6										j7				
GST06	30		M10	60	6	45	8	33	60	240	160 200	110 130	12 12	130 165	3.5 3.5	9 11
GST07	40		M16	80	7	63	12	43	80	302	200 250	130 180	14 15	165 215	3.5 4	11 13.5
GST09	50		M16	100	8	80	14	53.5	100	370	250 300	180 230	16 18	215 265	4 4	13.5 13.5
GST11		60	M20	120	8	100	18	64	120	433	300 350	230 250	18 20	265 300	4 5	14 18
GST14		80	M20	160	15	125	22	85	160	533	350 400	250 300	22 24	300 350	5 5	18 18

[1)] k_2 !





GST□□-2/3M VAR

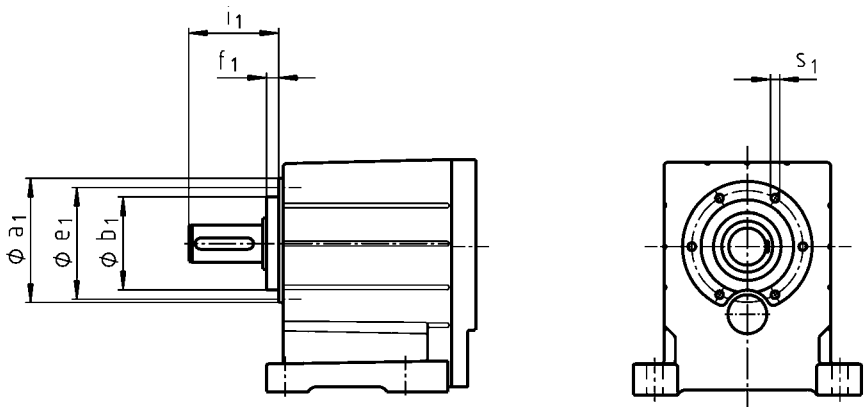

	a_1	b_1	e_1	f_1	i_1	s_1
		h7				
GST04	72	48	61	8.0	51.0	M5x10
GST05	88	58	74	9.0	62.0	M6x12
GST06	109	70	90	10.0	74.0	M8x14
GST07	140	100	120	13.0	97.0	M10x18
GST09	174	120	145	15.0	120.0	M12x20
GST11	215	150	185	18.0	143.0	M16x26
GST14	265	195	230	22.0	187.0	M20x34



GST□□-2/3M VAL

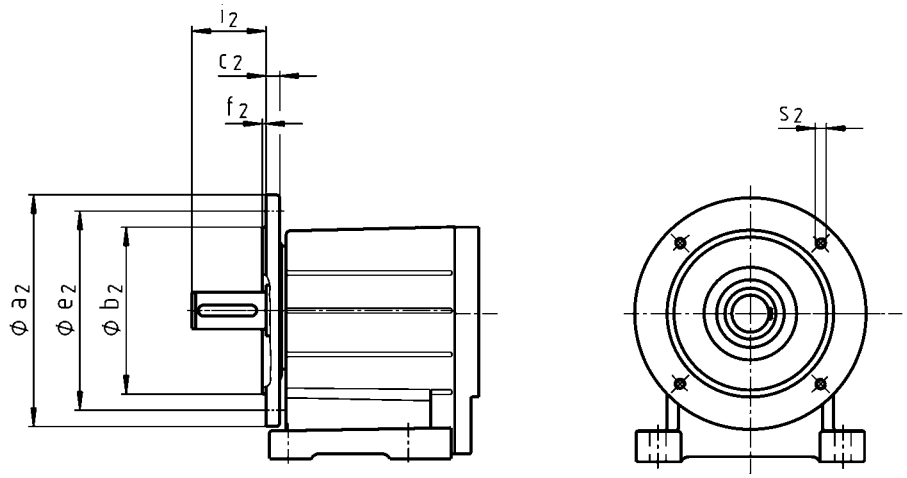

	a_2	b_2	c_2	e_2	f_2	i_2	s_2
		j7					
GST04	120 140	80 95	10 10	100 115	3.0 3.0	40	M6 M8
GST05	120 140 160	80 95 110	10 10 10	100 115 130	3.0 3.0 3.5	50	M6 M8 M8
GST06	160 200	110 130	12 12	130 165	3.5 3.5	60	M8 M10
GST07	200 250	130 180	14 15	165 215	3.5 4.0	80	M10 M12
GST09	250 300	180 230	16 18	215 265	4.0 4.0	100	M12 M12
GST11	300 350	230 250	18 20	265 300	4.0 5.0	120	M12 M16
GST14	350 400	250 300	22 24	300 350	5.0 5.0	160	M16 M16

Ventilations

Position of ventilation, sealing elements and oil level check

GST05...09-1

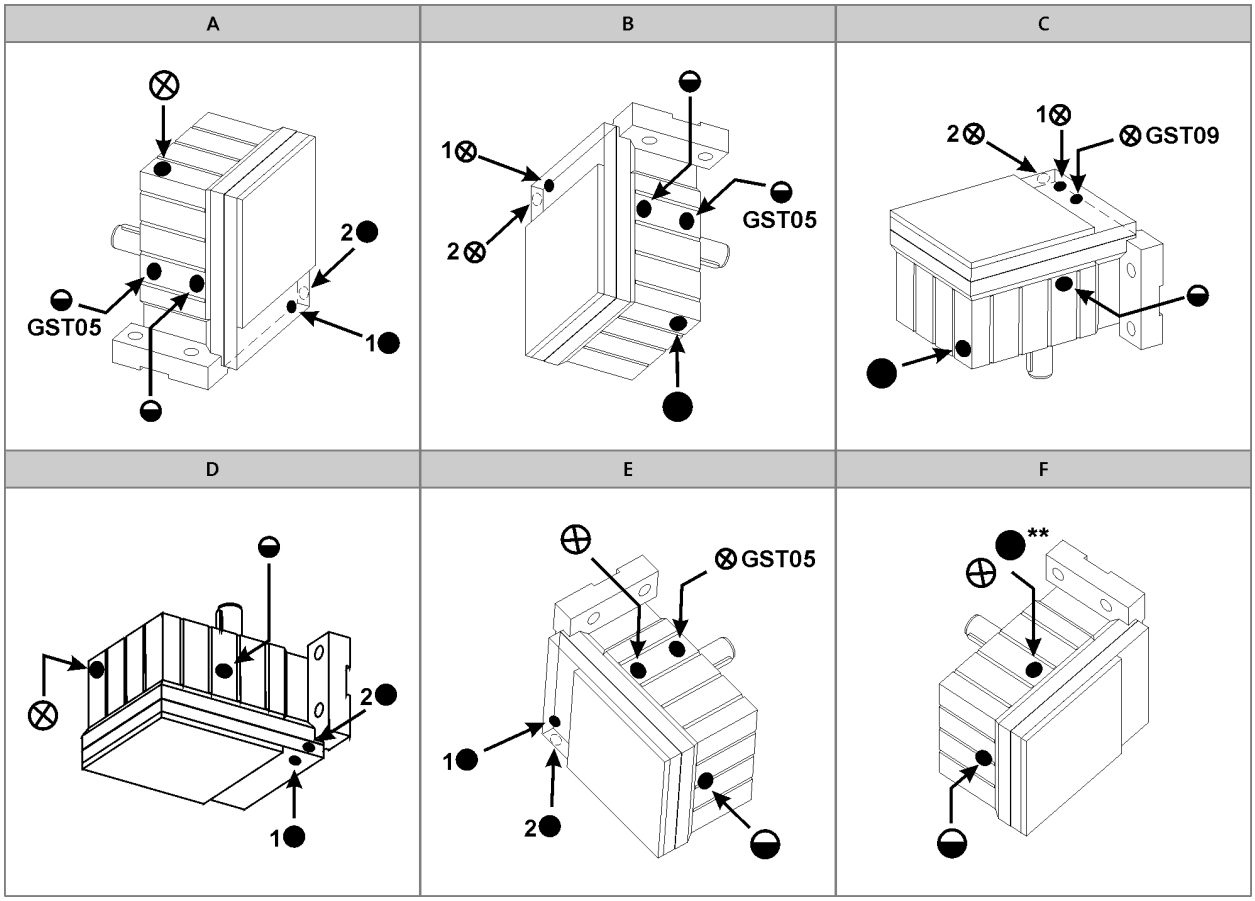

A ... F Mounting position
⊗ Ventilation / Oil filler plug
● Oil drain plug
◒ Oil control plug
* On both sides
** On opposite side

Item 1 standard
Item 2 only with:
- GST05-1M V□□ 090C□□
- GST05-1M V□□ 100C□□
- GST06-1M V□□ 112C□□
- GST07-1M V□□ 160C□□

6.4

Ventilations

Position of ventilation, sealing elements and oil level check

GST05...14-2

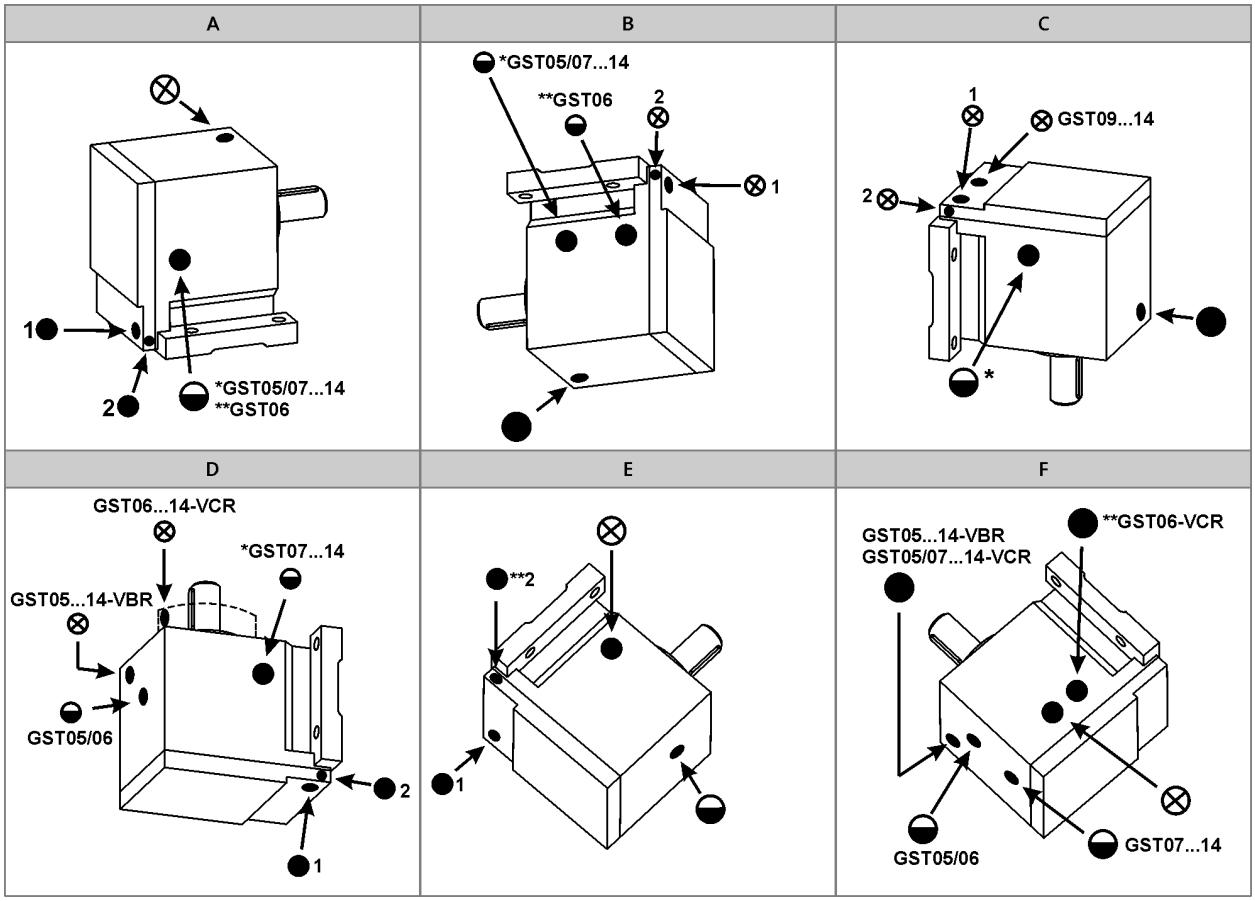

A ... F Mounting position
⊗ Ventilation / Oil filler plug
● Oil drain plug
◒ Oil control plug
* On both sides
** On opposite side

Item 1 standard
Item 2 only with:
- GST05-2M V□□ 090C□□
- GST05-2M V□□ 100C□□
- GST06-2M V□□ 112C□□
- GST07-2M V□□ 160C□□



Ventilations

Position of ventilation, sealing elements and oil level check

GST05...14-3

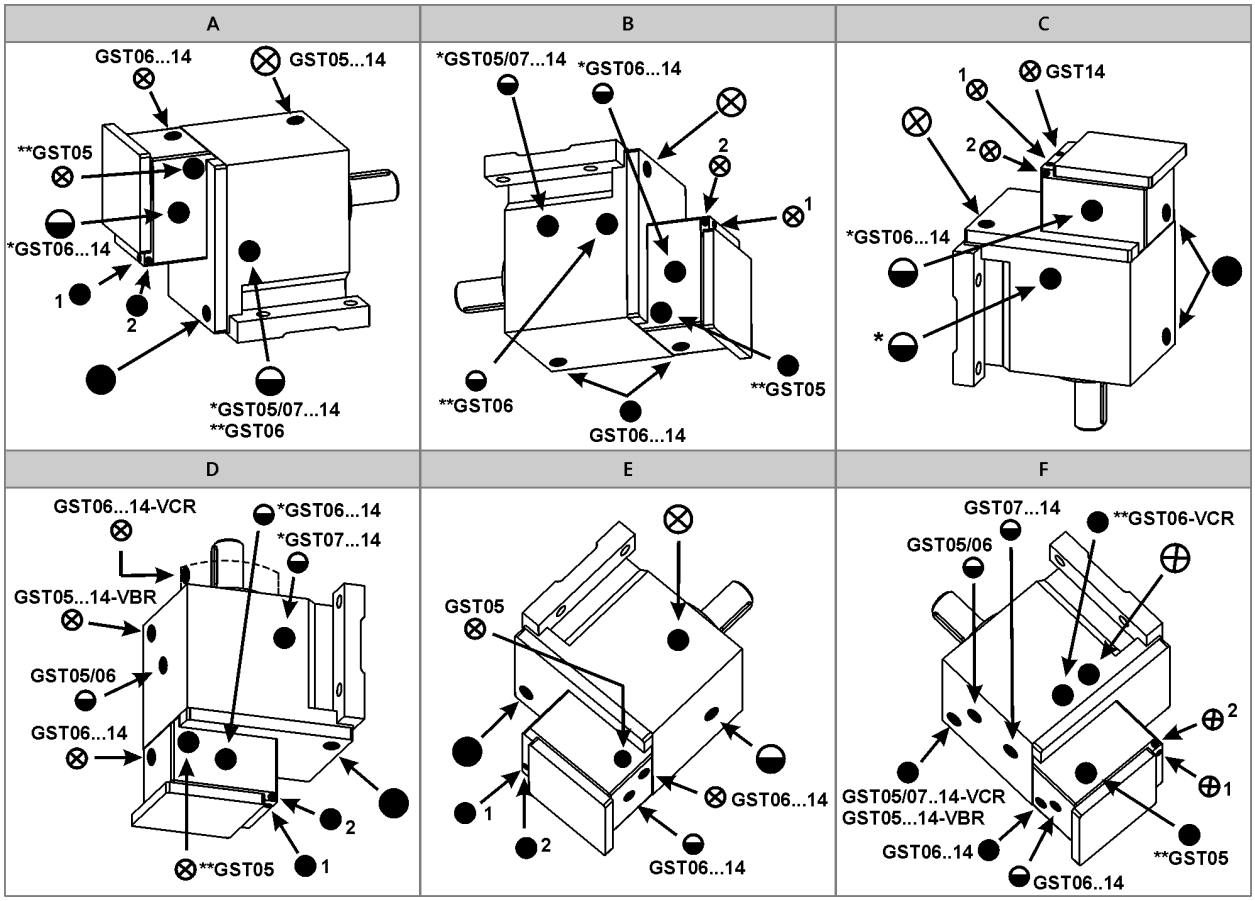

A ... F Mounting position
⊗ Ventilation / Oil filler plug
● Oil drain plug
◒ Oil control plug
* On both sides
** On opposite side

Item 1 standard
Item 2 only with:
- GST07-3M V□□ 090C□□
- GST07-3M V□□ 100C□□
- GST09-3M V□□ 112C□□

6.4



Ventilations

Compensation reservoir for mounting position C

GST□□-2

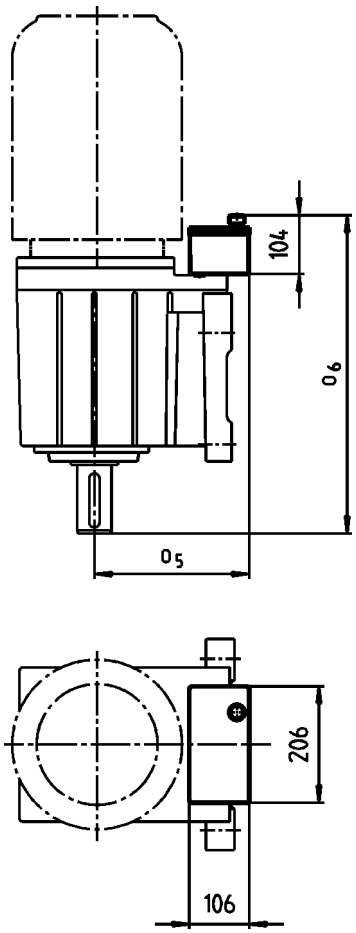

Motor	090 100		112		132		160 180 225	
	o_5	o_6	o_5	o_6	o_5	o_6	o_5	o_6
	[mm]	[mm]	[mm]	[mm]	[mm]	[mm]	[mm]	[mm]
GST09	206	477	226	477	245	477	260	477
GST11	208	536	230	540	254	540	268	540
GST14			252	640	282	640	282	640

► Terminal box position 4 not permitted.





GFL shaft-mounted helical gearboxes

MD/MH three-phase AC motors
0.12 to 0.55 kW
0.75 to 45 kW (IE2)



GFL shaft-mounted helical gearboxes

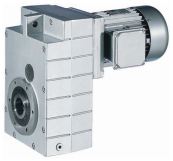

Contents

General information	List of abbreviations	6.6 - 4
	Product key	6.6 - 5
	Product information	6.6 - 7
	Functions and features	6.6 - 8
	Dimensioning	6.6 - 13
	Notes on ordering	6.6 - 19
	Ordering details checklist	6.6 - 20
Technical data	Permissible radial and axial forces at output	6.6 - 25
	Output backlash in angular minutes	6.6 - 29
	Moments of inertia	6.6 - 30
	Weights	6.6 - 35
	Selection tables	6.6 - 47
	Dimensions	6.6 - 108
Accessories	Hollow shaft with shrink disc	6.6 - 141
	Mounting set for hollow shaft circlip: Proposed design for auxiliary tools	6.6 - 143
	Foot mounting in position 3	6.6 - 144
	Foot mounting in position 4	6.6 - 145
	Rubber buffer for torque plate	6.6 - 146
	Ventilations	6.6 - 147

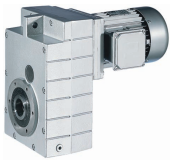

List of abbreviations

$\eta_{c=1}$		Efficiency
c		Load capacity
f_N	[Hz]	Rated frequency
$F_{ax,max}$	[N]	Max. axial force
$F_{rad,max}$	[N]	Max. radial force
H_{max}	[m]	Site altitude
i		Ratio
J	[kgcm²]	Moment of inertia
m	[kg]	Mass
M_2	[Nm]	Output torque
n_2	[r/min]	Output speed
n_N	[r/min]	Rated speed
P_N	[kW]	Rated power
$S_{hü}$	[1/h]	Transition operating frequency
$T_{opr,max}$	[°C]	Max. ambient operating temperature
$T_{opr,min}$	[°C]	Min. ambient operating temperature
$U_{N,\Delta}$	[V]	Rated voltage
$U_{N,Y}$	[V]	Rated voltage

CE	Communauté Européenne
CSA	Canadian Standards Association
DIN	Deutsches Institut für Normung e.V.
EMC	Electromagnetic compatibility
EN	European standard
IEC	International Electrotechnical Commission
IM	International Mounting Code
IP	International Protection Code
NEMA	National Electrical Manufacturers Association
UL	Underwriters Laboratory Listed Product
UR	Underwriters Laboratory Recognized Product
VDE	Verband deutscher Elektrotechniker (Association of German Electrical Engineers)
CCC	China Compulsory Certificate
GOST	Certificate for Russian Federation
cURus	Combined certification marks of UL for the USA and Canada
UkrSEPRO	Certificate for Ukraine

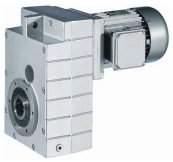

Product key

Gearbox type | Gearbox size | Number of stages | Input design | Shaft | Output design: Housing fastening | Drive unit

G F L [ ] [ ] - [ ] [ ] [ ] [ ] [ ] [ ] [ ] C [ ] [ ]

See page 24

2 2-stage

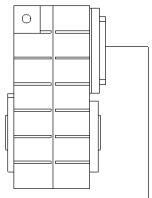

3 3-stage

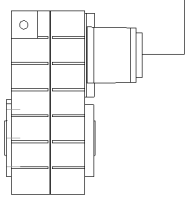

V Solid shaft with keyway



H Hollow shaft with keyway



S Hollow shaft with shrink disc (in position 6 or 1)

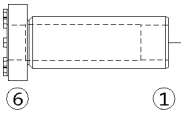

M Three-phase motor

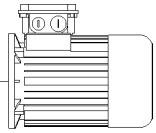

E Three-phase motor with 8400 motec

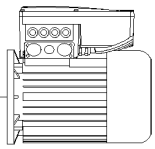

A R Foot (position 3 or 4) **and centring** with threaded pitch circle

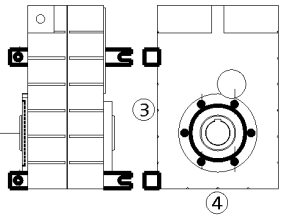

A K Foot (position 3 or 4) **and flange** with through holes

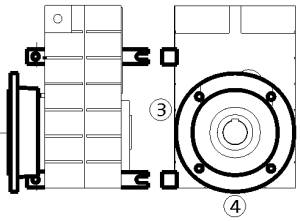

B R Foot (position 3 or 4) and threaded pitch circle

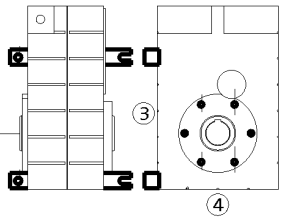

C R Centring with threaded pitch circle

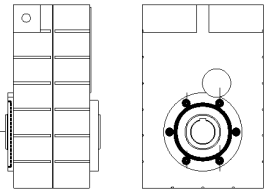

C K Flange with through holes

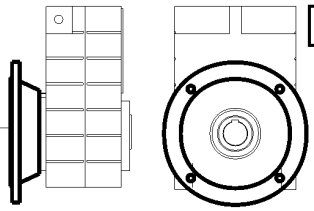

D R Threaded pitch circle

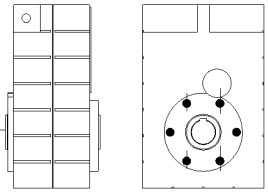

	Output design			
	V	H	S	K
	d x l [mm]	d [mm]	d [mm]	Øa2 [mm]
GFL04-2[2)]	25x50	25/30	25/30	160
GFL05-2/3	30x60	30/35	35	200
GFL06-2/3	40x80	40/45	40	200[1)]/250
GFL07-2/3	50x100	50/55	50	250/300
GFL09-2/3	60x120	60/70	65	350
GFL11-2/3	80x160	70/80	80	400/450
GFL14-2/3	100x200	100	100	450

[1)] Only in the case of H and S type of output
[2)] Output H version not possible with motor size 090

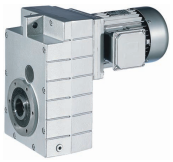

Product key

Mounting position (A to F) and position of system blocks (1 to 6)

A	B	C
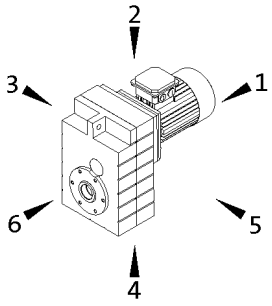	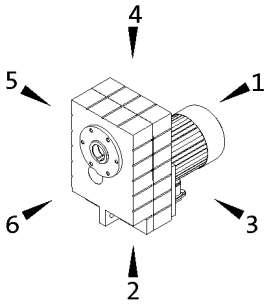	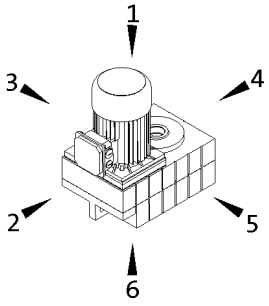
D	**E**	**F**
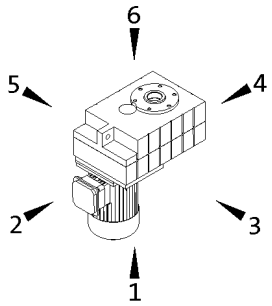	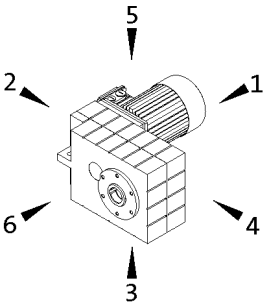	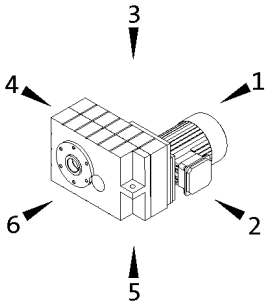

Hollow shaft: 0
Solid shaft: 6
Hollow shaft with shrink disc: 1, 6

Without foot: 0
Foot: 3, 4
Terminal box / motec: 2, 3, 4, 5

Gearbox designs

Basic versions	
Motor efficiency	Standard efficiency Increased efficiency (IE2)
Surface and corrosion protection	OKS-G (primer: grey) OKS-S (paint: RAL 7012)
Lubricant	CLP 460 (mineral)
Ventilation	Oil control plugs for GFL05 to 14 Breather elements for GFL06 ... 14

Options	
Surface and corrosion protection	OKS-S (special paint according to RAL) OKS-M (special paint according to RAL) OKS-L (special paint according to RAL)
Lubricant	CLP HC 320 (synthetic) CLP HC 220 USDA H1 (synthetic)
Shaft sealing rings	Driven shaft: Viton
Ventilation	Breather elements for GFL05 Compensation reservoir for GFL09 to 14-2 in mounting position C
Accessories	Rubber buffer for torque plate Shrink disc cover Mounting set for hollow shaft circlip
Nameplate	Metal nameplate (supplied loose) Adhesive nameplate (supplied loose)

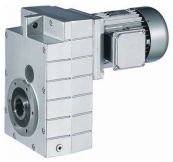

Product information

Lenze provides a geared motor construction kit, which covers a wide range of requirements. Numerous drive-side and output-side options enable precise adaptation of the drive to the specific application. This is the basis for versatile applications and functional scalability of our gearboxes and geared motors.
The modular concept and high power density make extremely compact sizes possible. Optimised teeth profiles and ground gears ensure low-noise operation and low backlash. The gearboxes are of compact and hence space-saving construction.

Designs

- 2-stage and 3-stage gearboxes
- Hollow shaft with keyway or shrink disc
- Solid shaft with keyway
- Foot or flange mounting
- Torque plate, including rubber buffer
- With three-phase AC motors MD, power range 0.12 ... 0.55 kW
- With three-phase AC motors MH (efficiency class IE2) , power range 0.75 ... 45 kW

Compact and powerful

In combination with three-phase AC motors, our shaft-mounted helical gearboxes form a compact and effective drive unit. The low level of backlash of the gear teeth ensures highest precision. In addition, they can also distribute the power output and torque via an output shaft on both sides. The gearboxes are available in 2- and 3-stage versions with a torque of up to 11,615 Nm and a ratio of up to i=856.

Inverters for motor-proximity installation

The Drive Package with decentralised Inverter Drives 8400 motec covers a power range up to 7.5 kW.

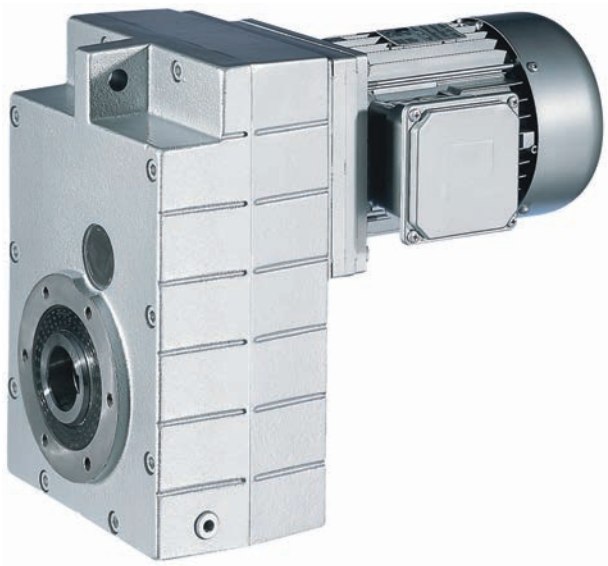

Shaft-mounted helical geared motor GFL07-2M HCR 100-32

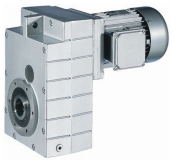

Functions and features

Gearbox type	GFL
Housing	
Design	Cuboid
Material	Aluminium / cast iron
Solid shaft	
Design	with keyway to DIN 6885
Tolerance	k6 (d ≤ 50 mm) m6 (d > 50 mm)
Material	Tempered steel C45 or 42CrMo4
Hollow shaft	
Design	H: with keyway S: smooth
Tolerance	Bore H7
Material	Tempered steel C45
Toothed part	
Design	Ground tooth flanks Optimised tooth flank geometry
Material	Case-hardened steel
Shaft-hub joint	
	1st stage/prestage/helical (bevel) gearbox: Friction-type connection Output stage (= 2nd, 3rd or 4th stage): Friction-type or positive-fit connection
Shaft sealing rings	
Design	With dust lip
Material	NB / FP
Bearing	
Design	Ball bearing / tapered-roller bearing depending on size and design
Schmierstoffe	
Standard	DIN 51502
Quantities	corresponding to mounting position (see operating instructions)
Mechanical efficiency	
1-stage gearboxes [$\eta_{c=1}$]	
2-stage gearboxes [$\eta_{c=1}$]	0.97
3-stage gearboxes [$\eta_{c=1}$]	0.95
4-stage gearboxes [$\eta_{c=1}$]	
Notes	

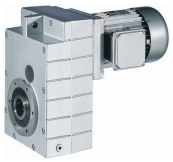

Functions and features

Lubricants

Lenze gearboxes and geared motors are ready for operation on delivery and are filled with lubricants specific to both the drive and the design. The mounting position and design specified in the order are key factors in choosing the volume of lubricant.

The lubricants listed in the lubricant table are approved for use in Lenze drives.

Lubricant table

Mode	CLP 460	CLP HC 320	CLP HC 220 USDA H1
Ambient temperature [°C]	0 ... +40	-25 ... +50	-20 ... +40
Specification	Mineral based oil with additives	Synthetic-based oil (synthetic hydrocarbon / poly-alpha-olefin oil)	
Note			For food processing industry
Changing interval	16000 operating hours not later than after three years (oil temperature 70 to 80 °C)	25000 operating hours not later than after three years (oil temperature 70 to 80 °C)	16000 operating hours not later than after three years (oil temperature 70 to 80 °C)
Fuchs	Fuchs Renolin CLP 460	Fuchs Renolin Unisyn CLP 320	bremer & leguil Cassida Fluid GL 220
Klüber	Klüberoil GEM1-460 N	Klübersynth GEM4-320 N	Klüberoil 4 UH1-220 N
Shell	Shell Omala S2 G 460	Shell Omala S4 GX HD 320	

► Please contact your Lenze sales office if you are operating at ambient temperatures in areas up to< -20 °C bzw. > or up to +40°C.

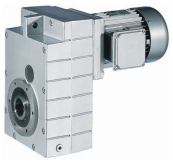

Functions and features

Surface and corrosion protection

For optimum protection of geared motors against ambient conditions, the surface and corrosion protection system (OKS) offers tailor-made solutions.

Various surface coatings combined with other protective measures ensure that the geared motors operate reliably even at high air humidity, in outdoor installations or in the presence of atmospheric impurities. Any colour from the RAL Classic collection can be chosen for the top coat. The geared motors are also available unpainted (no surface and corrosion protection).

Surface and corrosion protection system	Applications	Measures
	Catalogue text	Catalogue text
OKS-G (primed)	• Dependent on subsequent top coat applied	• 2K PUR priming coat (grey) • Zinc-coated screws • Rust-free breather elements Optional measures • Stainless steel nameplate
OKS-S (small)	• Standard applications • Internal installation in heated buildings • Air humidity up to 90%	• Surface coating as per corrosivity category C1 (in line with EN 12944-2) • Zinc-coated screws • Rust-free breather elements Optional measures • Stainless steel nameplate
OKS-M (medium)	• Internal installation in non-heated buildings • Covered, protected external installation • Air humidity up to 95%	• Surface coating as per corrosivity category C2 (in line with EN 12944-2) • Zinc-coated screws • Rust-free breather elements Optional measures • Stainless steel shaft • Stainless steel nameplate • Rust-free shrink disc (on request)
OKS-L (high)	• External installation • Air humidity above 95% • Chemical industry plants • Food industry	• Surface coating as per corrosivity category C3 (in line with EN 12944-2) • Blower cover and B end shield additionally primed • Cable glands with gaskets • Corrosion-resistant brake with cover ring, stainless friction plate, and chrome-plated armature plate (on request) • All screws/screw plugs zinc-coated • Stainless breather elements • Threaded holes that are not used are closed by means of plastic plugs Optional measures • Sealed recesses on motor (on request) • Stainless steel shaft • Stainless steel nameplate • Rust-free shrink disc (on request) • Additional priming coat on cast iron fan • Oil expansion tank and torque plates painted separately and supplied loose

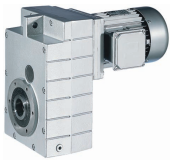

Functions and features

Structure of surface coating

Surface and corrosion protection system	Corrosivity category	Surface coating	Colour
	DIN EN ISO 12944-2	Structure	
Without OKS (uncoated)		Dipping primed gearbox	
OKS-G (primed)		Dipping primed gearbox 2K PUR priming coat	
OKS-S (small)	C1	Dipping primed gearbox 2K-PUR top coat	Standard: RAL 7012 Optional: RAL Classic
OKS-M (medium)	C2	Dipping primed gearbox 2K PUR priming coat 2K-PUR top coat	Standard: RAL 7012 Optional: RAL Classic
OKS-L (high)	C3	Dipping primed gearbox 2K PUR priming coat 2K-PUR top coat	Standard: RAL 7012 Optional: RAL Classic

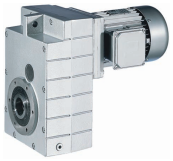

Functions and features

Ventilation

Non-ventilated gearboxes
No ventilation is required for the GFL04 gearbox.

Gearboxes that may optionally be equipped with ventilation
Special measures are not usually required when using the GFL05 gearbox. In borderline cases, e.g. at input speeds > 2000 rpm, we recommend the use of breather elements, which we can supply if required.

Ventilated gearboxes
The gearboxes GFL06 to 14 are supplied with breather elements as standard.

Special measures for mounting position C (motor on top)
We recommend that an oil compensation reservoir is always used with gearbox sizes G□□09 to 14 in this mounting position. This reservoir can be purchased as an option. For illustrations and measures, please refer to the Accessories chapter.

This is not required at higher ratios or low input speeds. Please contact Lenze for confirmation in this case.

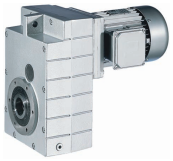

Dimensioning

General information about the data provided in this catalogue

Powers, torques and speeds
The powers, torques and speeds specified in this catalogue are rounded values and are valid under the following conditions:

- Operating time/day = 8 h (100% OT)
- Duty class I for up to 10 switching operations/h
- Mounting positions and designs in this catalogue
- Standard lubricant
- T_{amb} = 20 °C for gearboxes,
  T_{amb} = 40 °C for motors (in accordance with EN 60034)
- Site altitude < = 1000 m amsl
- The selection tables provide the permissible mechanical powers and torques. For notes on the thermal power limit, see chapter drive dimensioning.
- The rated power specified for motors and geared motors applies to operating mode S1 (in accordance with EN 60034).

Under different operating conditions, the values obtained may vary from those listed here.
In the case of extreme operating conditions, please consult your Lenze sales office.

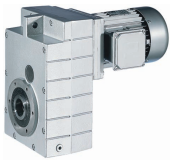

Dimensioning

Thermal power limit

The thermal power limit, defined by the heat balance, limits the permissible gearbox continuous power. It may be less than the mechanical power ratings listed in the selection tables.

The thermal power limit is affected by:
- the churning losses in the lubricant. These are determined by the mounting position and the circumferential speed of the wheels
- the load and the speed
- the ambient conditions: temperature, air circulation, input or dissipation via shafts and the foundation

Please consult your Lenze sales office
- if the following input speeds n_1 are exceeded on a continuous basis (continuous is defined as more than 8 h/day):

Motor frame size	Mounting position A, B, E, F	Mounting position C, D
063 ... 100	3000 r/min	3000 r/min
112 ... 132	3000 r/min	1500 r/min
160 ... 225	2000 r/min	1500 r/min

- if the following input speeds n_1 are exceeded:

Motor frame size	Mounting position A, B, E, F	Mounting position C, D
063 ... 100	4000 r/min	3000 r/min
112 ... 132	4000 r/min	2000 r/min
160 ... 225	3000 r/min	1500 r/min

- or if you are using the following gearbox type, size and ratio combinations at an input speed of $n_1 > 1500$ r/min:

Gearbox type	Gearbox size	Ratio i
GFL shaft-mounted helical gearbox	07, 09, 11, 14	≤ 16

Possible ways of extending the application area

- synthetic lubricant (option)
- shaft sealing rings made from FP material/Viton (option)
- reduction in lubricant quantity
- cooling of the geared motor by means of air convection on the machine/system

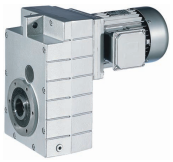

Dimensioning

Load capacity and application factor

Load capacity c of gearbox
Rated value for the load capacity of Lenze geared motors.
- c is the ratio of the permissible rated torque of the gearbox to the rated torque supplied by the drive component (e.g. the built-in Lenze motor).
- The value of c must always be greater than the value of the application factor k calculated for the application.

Application factor k (according to DIN 3990)
Takes into account the influence of temporally variable loads which are actually present during the anticipated operating time of gearboxes and geared motors.
k is determined by:
- the type of load
- the load intensity
- temporal influences

Duty class	Load type
I	Smooth operation, small or light jolts
II	Uneven operation, average jolts
III	Uneven operation, severe jolts and/or alternating load

Application factor k

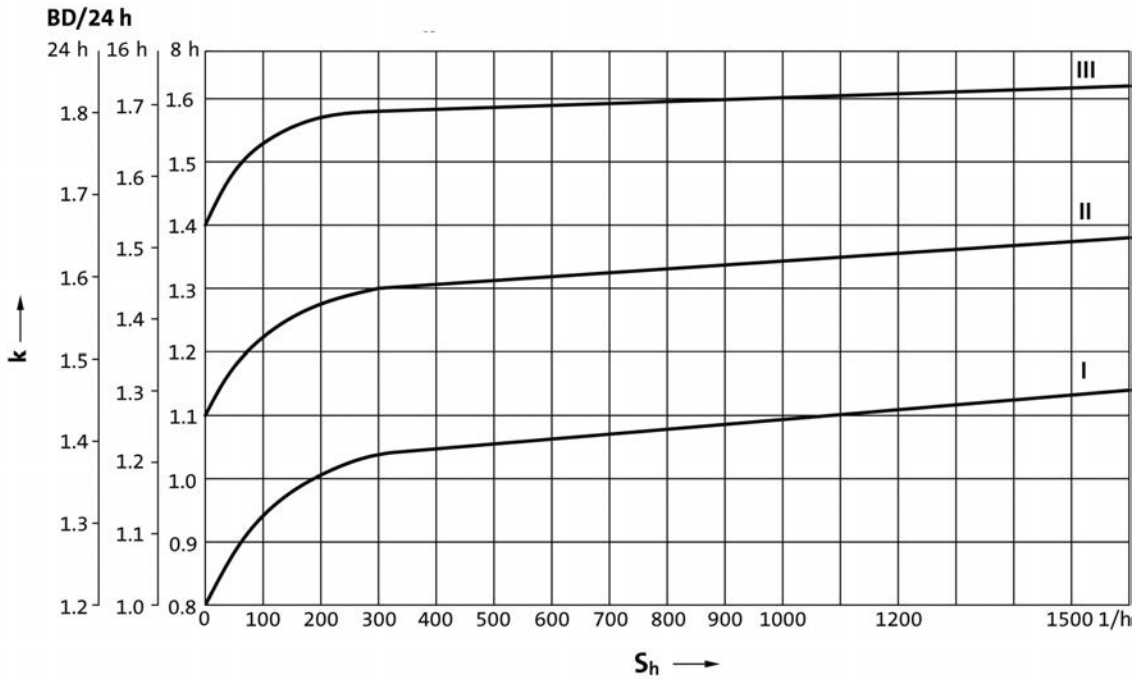

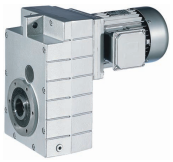

Dimensioning

Torque derating at low motor frequencies

Motor size-dependent torque reduction, taking into account the thermal response during operation on the inverter.

Torque characteristics

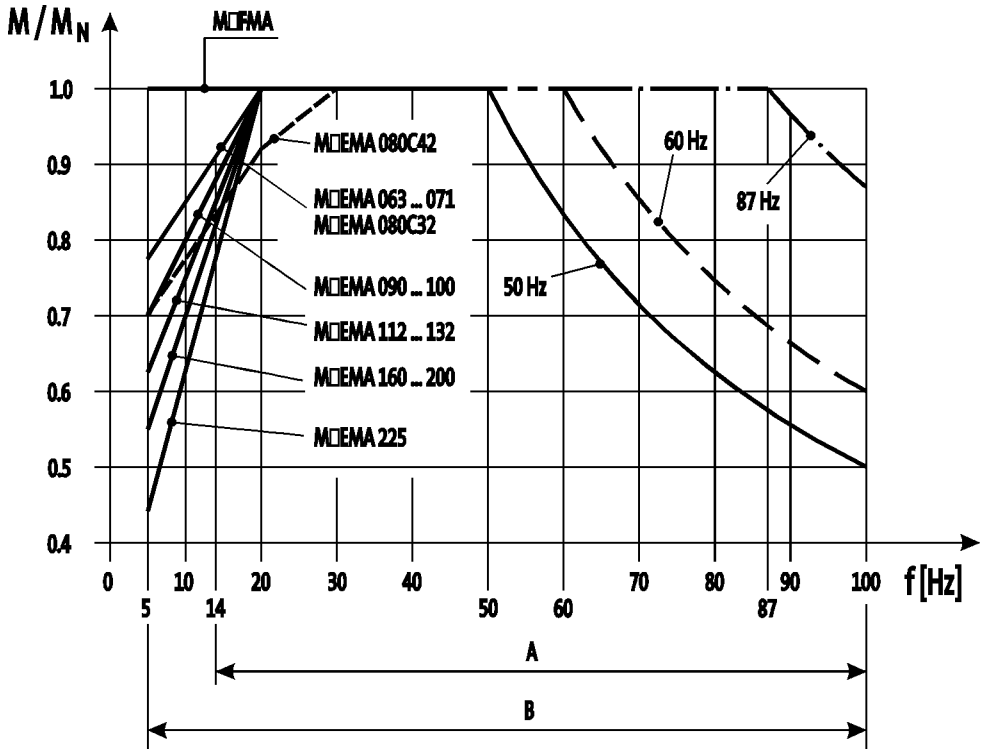

A = Operation with integral fan and brake
B = Operation with integral fan and brake control "Holding current reduction"

You can use the Drive Solution Designer for precise drive dimensioning.

The Drive Solution Designer helps you to carry out a fast and high-quality drive dimensioning.
The software includes well-founded and proven knowledge on drive applications and electro-mechanical drive components.

Please contact your Lenze sales office.

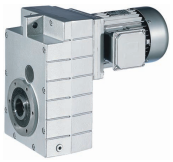

Dimensioning

Notes on the selection tables

The selection tables show the available combinations of gearbox type, number of stages, ratio and motor. They are used only to provide basic orientation.
The following legend indicates the structure of the selection tables.

Gearbox type

GST helical gearbox

Technical data



Selection tables

Rated speed n_N of the drive motor

Product key of geared motor

Rated power P_N of the drive motor in relation to the rated frequency

► 50 Hz, 60 Hz: P_N = 0.75 kW

n_N	1410 r/min			1720 r/min			i		
f_N	50 Hz			60 Hz					
	n_2 [r/min]	M_2 [Nm]	c	n_2 [r/min]	M_2 [Nm]	c			
	881	8.0	2.4	1069	6.6	2.8	1.600	GST04-1M □□□080C32	76
	689	10	2.2	835	8.4	2.6	2.048	GST04-1M □□□080C32	76

Output speed n_2

Output torque M_2 (constant for all listed frequencies)

The load capacity c of the gearbox c is the ratio of the gearbox's rated torque to the rated torque of the three-phase motor (calculated in respect of its application to the output shaft). c must always be greater than the application factor k determined for the application

Ratio i

Page number for dimensions

$$c = \frac{M_{2,zul}}{M_{1N} \cdot i \cdot \eta_{Getr}} > k$$

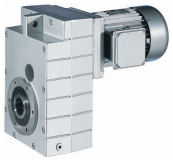

Dimensioning

Notes on the selection tables

Motor voltages

The power values and torques indicated in the selection tables relate to the following motor voltages:
- 50 Hz : Δ 230 V / Y 400 V
- 60 Hz : 230 V or 460 V
- 87 Hz : Δ 400 V

Operation at 87 Hz

In 87 Hz operation, the three-phase AC motor (which is designed for a voltage of Δ 230 V / Y 400 V at 50 Hz) is operated on an inverter with 400 V rated voltage in a delta connection. It is important to note here that the inverter must be configured for 87Hz output.
This offers the following advantages over 50 Hz operation:
- the setting range of the motor is increased by a factor of 1.73.
- the motor can then provide around 1.73 times greater output, which in turn allows a smaller and more affordable motor to be selected for the application.
- the efficiency of the motor is also improved.

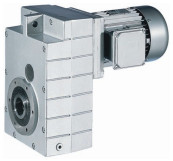

Notes on ordering

We want to be sure that you receive the correct products in good time.

To allow us to achieve this we need:
- your address and your company data
- our product key for the individual products in this catalogue
- your delivery date and delivery address

Ordering procedure
Please use the ordering information checklist to ensure that you provide all the ordering information required for the various products.

The ordering information checklist, the product key, the basic versions, options, mounting position and position of the system blocks will be found in the General – Product key section.

A list of Lenze's worldwide sales offices can be found on the Internet: www.Lenze.com.

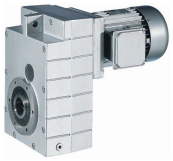

Ordering details checklist

☐ **Offer**

Page __ of __

☐ **Order**

Customer No.

☐☐☐☐☐☐☐☐

Job No.

☐☐☐☐☐☐☐☐☐☐

Fax No. _____

Sender

Company _____ Made out by (name) _____

Street/P.O. Box _____ Department _____

P.O. Box, City _____ Telephone No. _____

Date Signature _____

Delivery address (if different)

Street/P.O. Box _____ Desired delivery date _____

P.O. Box, City _____ Dispatching notes _____

Invoice recipient (if different)

Street/P.O. Box _____

Postal code, City _____

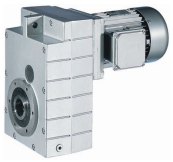

Ordering details checklist

Customer No.

Job No.

Page __

Quantity

Efficiency class ☐ Standard efficiency ☐ High efficiency (IE2)

Rated frequency ☐ 50 Hz ☐ 60 Hz ☐ 87 Hz

Ratio i

GFL ☐☐ – ☐ 2 / 3 ☐ M / E ☐ V / H / S ☐ A / B / C / D ☐ R / K

Motor frame size ☐☐☐C☐☐

Hollow shaft d = ☐ mm

Flange a_2 = ☐ mm

Mounting position A ☐ B ☐ C ☐ D ☐ E ☐ F ☐

Position of system blocks

Shaft/shrink disc			Foot			Terminal box			
0	6	1	0	3	4	2	3	4	5
☐	☐	☐	☐	☐	☐	☐	☐	☐	☐

Surface and corrosion protection ☐ OKS-S colour: RAL 7012 ☐ OKS-G (primed)

Options

Special lubricants ☐ CLP HC 320 (synthetic) ☐ CLP HC 220 USDA H1 (for the food industry)

Surface and corrosion protection ☐ OKS-S (small) ☐ OKS-M (medium) ☐ OKS-L (high) ☐ OKS-G (primed)

Accessories ☐ Rubber buffer for torque support ☐ Mounting set for hollow-shaft circlip ☐ Hollow shaft cover, hoseproof

Shaft sealing rings ☐ Viton

Breathing ☐ Breather elements for GFL05 ☐ Compensation reservoir in mounting position for GFL09 ... 14-2

6.6

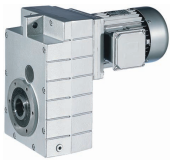

Ordering details checklist

Three-phase AC motors options

Customer No. ☐☐☐☐☐☐☐☐

Job No. ☐☐☐☐☐☐☐☐☐☐

Page __

Motor connection

Terminal box
- ☐ with plug-in connector ICN 6-pin. Adhere to permissible rated motor current 20 A!
- ☐ with plug-in connector ICN 8-pin. Adhere to permissible rated motor current 20 A!
- ☐ with plug-in connector HAN10E. Adhere to permissible rated current 16 A!
- ☐ with plug-in connector HAN-Modular. Adhere to permissible rated current 16 / 40 A!

Cable entry: only with M□□MAXX/LL063 ... 132 or terminal box with plug-in connector in position ☐ 1 ☐ 2 ☐ 3 ☐ 4 ☐ 5

Blower

☐ 1~ ☐ 3~

☐ Terminal box with plug-in connector ICN

Terminal box position ☐ 2 ☐ 3 ☐ 4 ☐ 5

Spring-applied brake

Brake version: ☐ Standard ☐ Longlife

Brake size: ☐

Characteristic torque: ☐ Nm

Rated voltage: AC ☐ DC ☐ ☐ V

Rectifier: Only in the case of AC supply voltage

- ☐ Half-wave rectifier
- ☐ Bridge rectifier
- ☐ Bridge/half-wave rectifier (overexcitation)
- ☐ Bridge/half-wave rectifier (holding current reduction)

Brake options: Manual release lever in position ☐ 2 ☐ 3 ☐ 4 ☐ 5

☐ Low-noise version (Standard in the case of brake with speed/position encoder)

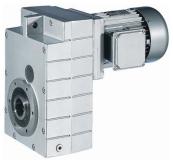

Ordering details checklist

Three-phase AC motors options

Customer No. ☐☐☐☐☐☐☐☐

Job No. ☐☐☐☐☐☐☐☐☐☐

Page __

Speed/position encoder

Resolver	☐ RS1				
Incremental encoder HTL	☐ IG128-24V-H	☐ IG512-24V-H	☐ IG1024-24V-H	☐ IG2048-24V-H	
Incremental encoder TTL		☐ IG512-5V-T	☐ IG1024-5V-T	☐ IG2048-5V-T	
Feedback with ICN connector	☐ IG128-24V-H not possible with plug-in connector!				

Motor protection

☐ PTC ☐ KTY 83-110 ☐ KTY 84-130

Approval

☐ UL/CSA approval: cURus ☐ CCC ☐ China Energy Label

Further options

Indication of supply voltage only for motor frame sizes 112C32 to 225C22

☐ Δ; 400V-50Hz; 460V-60Hz

☐ Y/Δ; 400/230V-50Hz; 460/265V-60Hz (-/400V-87Hz possible in operation with frequency inverter)

☐ Protection cover

☐ 2nd shaft end

☐ Handwheel

☐ Increased centrifugal mass

☐ 2nd nameplate (adhesive nameplate/metal nameplate)

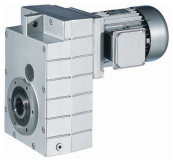

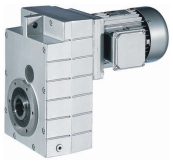

Permissible radial and axial forces at output

Permissible radial force
$F_{rad,per} = \min(f_w \times f_\alpha \times F_{rad,max}\ ;\ f_w \times F_{rad,max}$ at $n_2 \leq 16$ r/min)

Permissible axial force
$F_{ax,per} = F_{ax,max}$ if $F_{rad} = 0$

If F_{rad} **and** $F_{ax} \neq 0$, please contact your Lenze sales office.

Application of forces

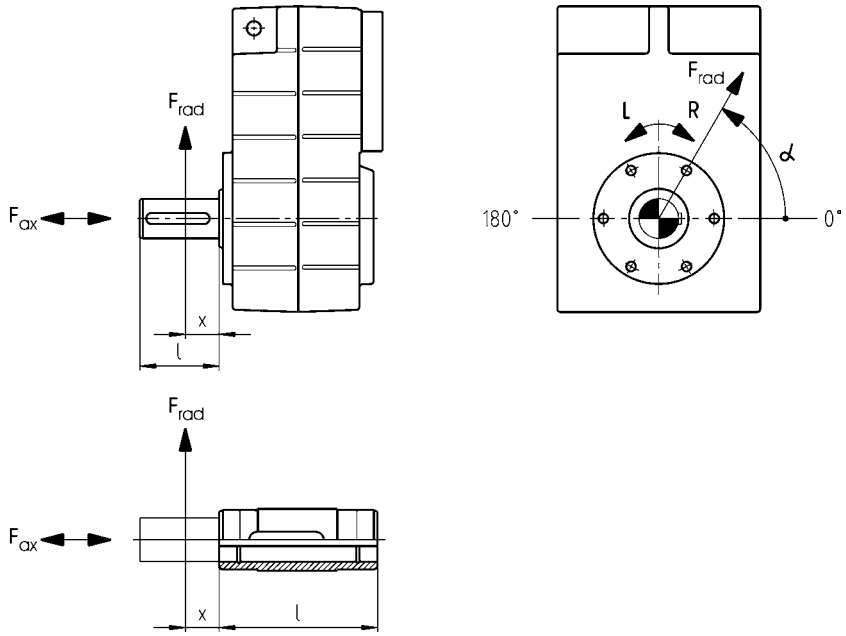

Effective direction factor f_α at output shaft

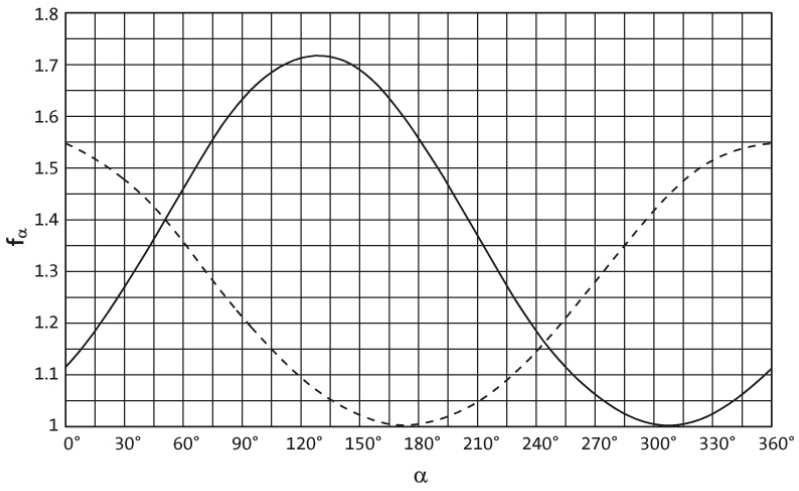

——— Direction of rotation R
— — — Direction of rotation L

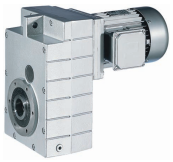

Permissible radial and axial forces at output

Additional load factor f_w at output shaft

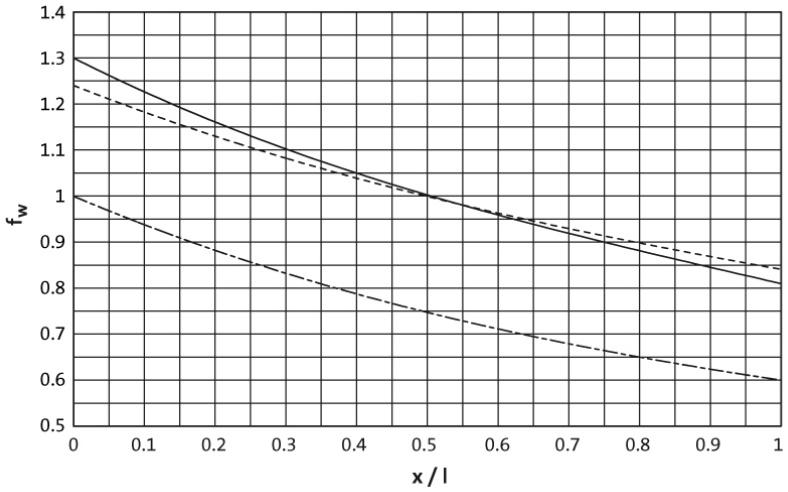

——— Solid shaft (V□□)
— · — Hollow shaft (H□□)
— — — Solid shaft with flange (V□K)

GFL□□-2/3□ H□□

Size	n_2 [r/min]									
Gearbox	1000	630	400	250	160	100	63	40	25	≤16

	Max. radial force, Hollow shaft									
	$F_{rad,max}$	$F_{rad,max}$	$F_{rad,max}$	$F_{rad,max}$	$F_{rad,max}$	$F_{rad,max}$	$F_{rad,max}$	$F_{rad,max}$	$F_{rad,max}$	$F_{rad,max}$
	[N]	[N]	[N]	[N]	[N]	[N]	[N]	[N]	[N]	[N]
GFL04	2100	2700	2800	3200	3800	4600	5500	6300	7000	7000
GFL05	1800	2400	3000	3400	4100	5000	6000	7100	8000	8000
GFL06	2400	3300	4300	4700	5000	6600	8500	10800	12000	12000
GFL07	2200	3400	4500	5100	6400	7900	9300	11500	15000	16000
GFL09			5000	6000	7200	10500	13000	15000	22000	24000
GFL11			7300	8700	10000	14200	19000	23000	27000	30000
GFL14			8000	9000	9500	11500	14000	18000	30000	45000

	Max. axial force, Hollow shaft									
	$F_{ax,max}$	$F_{ax,max}$	$F_{ax,max}$	$F_{ax,max}$	$F_{ax,max}$	$F_{ax,max}$	$F_{ax,max}$	$F_{ax,max}$	$F_{ax,max}$	$F_{ax,max}$
	[N]	[N]	[N]	[N]	[N]	[N]	[N]	[N]	[N]	[N]
GFL04	1300	1700	2200	2600	3200	4200	5300	5500	5500	5500
GFL05	1600	2200	2800	3600	4200	5900	6600	6600	6600	6600
GFL06	2400	3200	4000	5200	6000	8500	10000	10000	10000	10000
GFL07	2000	2700	3400	4700	6000	8500	12000	14000	14000	14000
GFL09			3100	4200	5800	10000	13500	17000	21000	21000
GFL11			4700	6000	7500	14000	19000	25000	27000	27000
GFL14			4000	5000	6200	7500	11000	17500	31000	35000

- Application of force F_{rad}: at hollow shaft end face (x = 0)
- $F_{ax,max}$ only valid with F_{rad} = 0
- Neither radial nor axial forces are permissible for the hollow shaft with shrink disc (S□□).

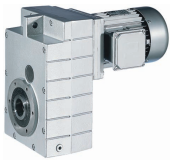

Permissible radial and axial forces at output

GFL□□-2/3□ V□R

Size	n_2 [r/min]									
Gearbox	1000	630	400	250	160	100	63	40	25	≤16

	Max. radial force, Solid shaft without flange									
	$F_{rad,max}$	$F_{rad,max}$	$F_{rad,max}$	$F_{rad,max}$	$F_{rad,max}$	$F_{rad,max}$	$F_{rad,max}$	$F_{rad,max}$	$F_{rad,max}$	$F_{rad,max}$
	[N]	[N]	[N]	[N]	[N]	[N]	[N]	[N]	[N]	[N]
GFL04	1650	2100	2300	2700	3200	3600	3600	3600	3600	3600
GFL05	1400	1900	2400	2700	3200	4000	4800	5800	6200	6200
GFL06	1850	2500	3200	3600	3900	5100	6500	8400	9000	9000
GFL07	1650	2600	3200	3600	3900	5100	6500	8400	9000	9000
GFL09 [1]			3800	4400	5500	8000	10000	12000	18000	18000
GFL11 [1]			5500	6300	7300	11200	14500	17400	20500	23000
GFL14			47000	54000	62000	65000	65000	65000	65000	65000

	Max. axial force, Solid shaft without flange									
	$F_{ax,max}$	$F_{ax,max}$	$F_{ax,max}$	$F_{ax,max}$	$F_{ax,max}$	$F_{ax,max}$	$F_{ax,max}$	$F_{ax,max}$	$F_{ax,max}$	$F_{ax,max}$
	[N]	[N]	[N]	[N]	[N]	[N]	[N]	[N]	[N]	[N]
GFL04	1300	1700	2200	2600	3200	4200	5300	5500	5500	5500
GFL05	1600	2200	2800	3600	4200	5900	6600	6600	6600	6600
GFL06	2400	3200	4000	5200	6000	8500	10000	10000	10000	10000
GFL07	2000	2700	3400	4700	6000	8500	12000	14000	14000	14000
GFL09 [1]			3100	4200	5800	10000	13500	17000	21000	21000
GFL11 [1]			4700	6000	7500	14000	19000	25000	27000	27000
GFL14			25000	27000	29000	32000	35000	35000	35000	35000

[1] Reinforced output shaft bearings are available on request for V□R versions.

- Application of force F_{rad}: centre of shaft journal (x = l/2)
- $F_{ax,max}$ only valid with F_{rad} = 0

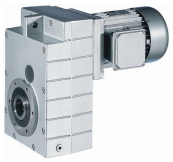

Permissible radial and axial forces at output

GFL□□-2/3□ V□K

Size	n_2 [r/min]									
Gearbox	1000	630	400	250	160	100	63	40	25	≤16

	Max. radial force, Solid shaft with flange									
	$F_{rad,max}$	$F_{rad,max}$	$F_{rad,max}$	$F_{rad,max}$	$F_{rad,max}$	$F_{rad,max}$	$F_{rad,max}$	$F_{rad,max}$	$F_{rad,max}$	$F_{rad,max}$
	[N]	[N]	[N]	[N]	[N]	[N]	[N]	[N]	[N]	[N]
GFL04	2300	2800	3200	3700	4400	4600	4600	4600	4600	4600
GFL05	2900	3700	4300	5100	5900	6800	7000	7000	7000	7000
GFL06	4000	5000	6100	7000	7800	9600	10000	10000	10000	10000
GFL07	4000	5200	6400	7400	8900	10500	12000	13000	14000	14000
GFL09			7800	9000	10500	14000	15000	15000	15000	15000
GFL11			12500	14500	17000	21500	26000	30000	30000	30000
GFL14			18000	20000	23000	27500	32000	38000	43000	43000

	Max. axial force, Solid shaft with flange									
	$F_{ax,max}$	$F_{ax,max}$	$F_{ax,max}$	$F_{ax,max}$	$F_{ax,max}$	$F_{ax,max}$	$F_{ax,max}$	$F_{ax,max}$	$F_{ax,max}$	$F_{ax,max}$
	[N]	[N]	[N]	[N]	[N]	[N]	[N]	[N]	[N]	[N]
GFL04	1300	1700	2200	2600	3200	4200	4400	4400	4400	4400
GFL05	1800	2400	3100	3900	4800	6400	6600	6600	6600	6600
GFL06	2500	3400	4300	5500	6500	8500	10000	10000	10000	10000
GFL07	3600	4800	6100	6500	7000	9500	11500	11500	11500	11500
GFL09			6100	6500	7000	9500	11500	11500	11500	11500
GFL11			6800	8500	10500	17000	22000	27000	27000	27000
GFL14			6000	8000	10000	13000	19000	26000	35000	35000

- Application of force F_{rad}: centre of shaft journal (x = l/2)
- $F_{ax,max}$ only valid with F_{rad} = 0

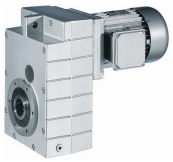

Output backlash in angular minutes

► Backlash ϕ depending on ratio i

GFL04 to 14-2

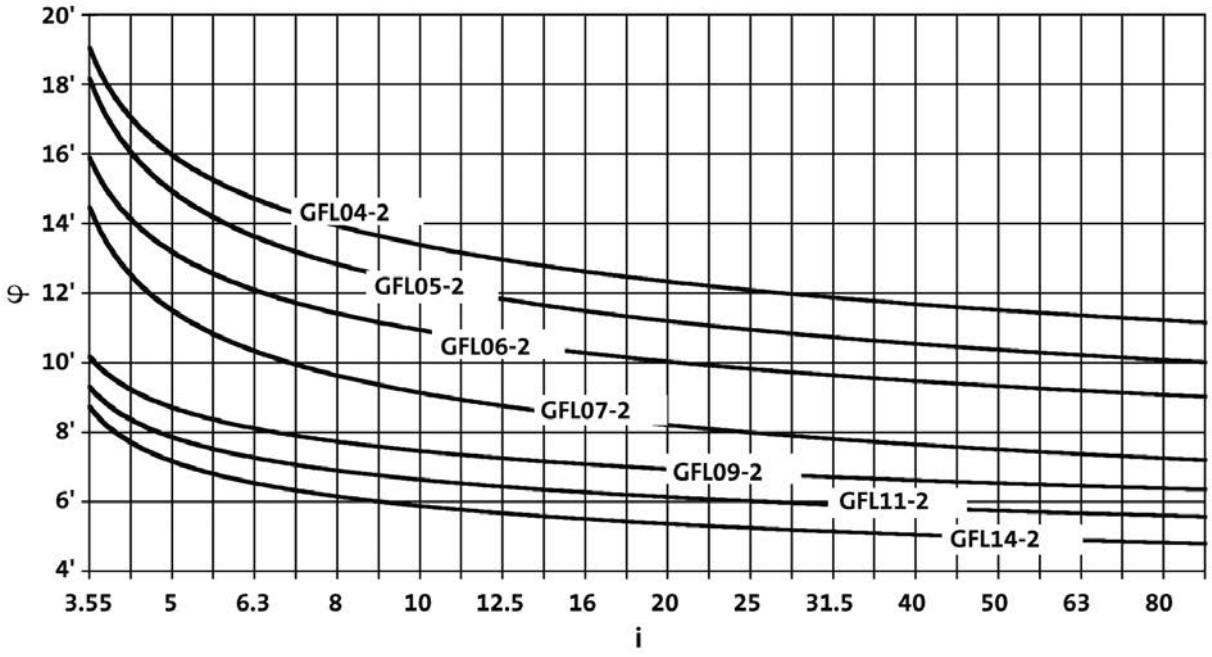

GFL05 to 14-3

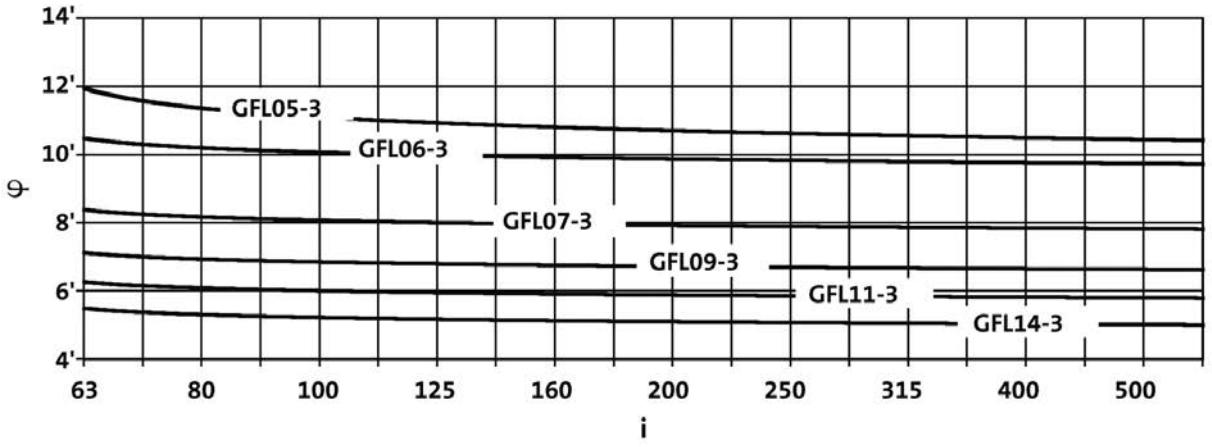

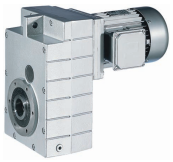

Moments of inertia

GFL□□-2

► Moment of inertia (J) depending on ratio i

Gearbox			GFL04
3.659	J	[kgcm²]	1.510
5.018	J	[kgcm²]	0.858
5.833	J	[kgcm²]	0.925
6.422	J	[kgcm²]	0.555
7.025	J	[kgcm²]	0.473
8.379	J	[kgcm²]	0.666
9.333	J	[kgcm²]	0.613
10.238	J	[kgcm²]	0.366
11.491	J	[kgcm²]	0.410
12.800	J	[kgcm²]	0.382
14.706	J	[kgcm²]	0.282
16.087	J	[kgcm²]	0.245
17.920	J	[kgcm²]	0.230
20.519	J	[kgcm²]	0.171
22.857	J	[kgcm²]	0.163
25.136	J	[kgcm²]	0.129
28.000	J	[kgcm²]	0.123
31.600	J	[kgcm²]	0.086
35.200	J	[kgcm²]	0.082
40.697	J	[kgcm²]	0.058
45.333	J	[kgcm²]	0.056
51.579	J	[kgcm²]	0.038
57.455	J	[kgcm²]	0.037
64.636	J	[kgcm²]	0.026
72.000	J	[kgcm²]	0.025
85.156	J	[kgcm²]	0.016
94.857	J	[kgcm²]	0.015

Gearbox			GFL05
3.333	J	[kgcm²]	1.677
4.571	J	[kgcm²]	2.133
5.133	J	[kgcm²]	2.372
5.667	J	[kgcm²]	2.329
6.400	J	[kgcm²]	0.822
7.040	J	[kgcm²]	1.470
7.771	J	[kgcm²]	1.450
9.010	J	[kgcm²]	0.951
9.946	J	[kgcm²]	0.885
11.360	J	[kgcm²]	1.082
12.800	J	[kgcm²]	1.012
14.538	J	[kgcm²]	0.746
15.904	J	[kgcm²]	0.603
17.920	J	[kgcm²]	0.609
20.286	J	[kgcm²]	0.428
22.857	J	[kgcm²]	0.434
24.850	J	[kgcm²]	0.345
28.000	J	[kgcm²]	0.331
32.344	J	[kgcm²]	0.204
36.444	J	[kgcm²]	0.195
40.233	J	[kgcm²]	0.148
45.333	J	[kgcm²]	0.142
52.067	J	[kgcm²]	0.093
58.667	J	[kgcm²]	0.090
63.190	J	[kgcm²]	0.068
71.200	J	[kgcm²]	0.064
80.763	J	[kgcm²]	0.043
91.000	J	[kgcm²]	0.042

► The moments of inertia relate to the drive shaft of the gearbox.
► The total moment of inertia is calculated by adding the values of the gearbox, motor and accessories.

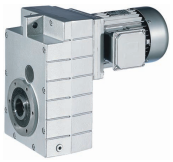

Moments of inertia

GFL□□-2

► Moment of inertia (J) depending on ratio i

Gearbox			GFL06
3.675	J	[kgcm²]	7.755
5.211	J	[kgcm²]	6.636
5.750	J	[kgcm²]	6.044
6.450	J	[kgcm²]	3.651
7.147	J	[kgcm²]	4.044
8.400	J	[kgcm²]	4.264
9.463	J	[kgcm²]	3.879
10.092	J	[kgcm²]	2.520
11.520	J	[kgcm²]	1.730
12.978	J	[kgcm²]	2.610
14.743	J	[kgcm²]	1.950
16.128	J	[kgcm²]	1.680
18.169	J	[kgcm²]	1.570
20.571	J	[kgcm²]	1.190
23.175	J	[kgcm²]	1.130
25.200	J	[kgcm²]	0.904
28.389	J	[kgcm²]	0.861
32.800	J	[kgcm²]	0.581
36.951	J	[kgcm²]	0.556
40.800	J	[kgcm²]	0.425
45.963	J	[kgcm²]	0.407
52.800	J	[kgcm²]	0.264
59.481	J	[kgcm²]	0.251
64.080	J	[kgcm²]	0.193
72.189	J	[kgcm²]	0.187
81.000	J	[kgcm²]	0.125
91.250	J	[kgcm²]	0.121

Gearbox			GFL07
3.350	J	[kgcm²]	19.570
4.643	J	[kgcm²]	11.988
5.159	J	[kgcm²]	11.120
5.695	J	[kgcm²]	18.094
6.400	J	[kgcm²]	9.831
7.150	J	[kgcm²]	11.878
8.324	J	[kgcm²]	13.113
9.379	J	[kgcm²]	12.037
9.714	J	[kgcm²]	8.030
11.538	J	[kgcm²]	8.520
13.000	J	[kgcm²]	7.970
14.200	J	[kgcm²]	6.350
15.904	J	[kgcm²]	5.270
17.920	J	[kgcm²]	4.980
20.286	J	[kgcm²]	3.470
22.857	J	[kgcm²]	3.268
24.850	J	[kgcm²]	2.645
28.000	J	[kgcm²]	2.525
32.344	J	[kgcm²]	1.690
36.444	J	[kgcm²]	1.610
39.642	J	[kgcm²]	1.250
44.667	J	[kgcm²]	1.200
52.067	J	[kgcm²]	0.783
58.667	J	[kgcm²]	0.753
63.190	J	[kgcm²]	0.573
71.200	J	[kgcm²]	0.555
79.875	J	[kgcm²]	0.366
90.000	J	[kgcm²]	0.358

► The moments of inertia relate to the drive shaft of the gearbox.
► The total moment of inertia is calculated by adding the values of the gearbox, motor and accessories.

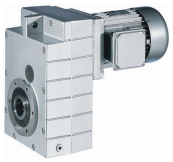

Moments of inertia

GFL□□-2

► Moment of inertia (J) depending on ratio i

Gearbox			GFL09
6.864	J	[kgcm²]	41.300
7.466	J	[kgcm²]	38.700
9.010	J	[kgcm²]	26.800
9.799	J	[kgcm²]	25.300
11.167	J	[kgcm²]	19.500
12.307	J	[kgcm²]	27.600
14.333	J	[kgcm²]	20.000
16.333	J	[kgcm²]	15.500
18.407	J	[kgcm²]	14.600
19.667	J	[kgcm²]	12.100
22.164	J	[kgcm²]	11.300
24.111	J	[kgcm²]	9.040
27.173	J	[kgcm²]	8.630
32.667	J	[kgcm²]	5.430
36.815	J	[kgcm²]	5.210
39.667	J	[kgcm²]	4.070
44.704	J	[kgcm²]	3.920
51.333	J	[kgcm²]	2.590
57.852	J	[kgcm²]	2.500
62.300	J	[kgcm²]	1.890
70.211	J	[kgcm²]	1.830
78.750	J	[kgcm²]	1.250
88.750	J	[kgcm²]	1.210

Gearbox			GFL11
6.864	J	[kgcm²]	124.000
7.466	J	[kgcm²]	116.000
9.010	J	[kgcm²]	79.600
9.799	J	[kgcm²]	74.800
10.720	J	[kgcm²]	65.000
12.480	J	[kgcm²]	81.500
14.538	J	[kgcm²]	58.400
15.904	J	[kgcm²]	51.300
17.920	J	[kgcm²]	48.300
20.286	J	[kgcm²]	36.100
22.857	J	[kgcm²]	34.300
24.850	J	[kgcm²]	26.900
28.000	J	[kgcm²]	25.700
32.739	J	[kgcm²]	17.100
36.889	J	[kgcm²]	16.500
40.233	J	[kgcm²]	12.600
45.333	J	[kgcm²]	12.200
52.067	J	[kgcm²]	8.080
58.667	J	[kgcm²]	7.810
63.190	J	[kgcm²]	5.900
71.200	J	[kgcm²]	5.720
79.875	J	[kgcm²]	3.870
90.000	J	[kgcm²]	3.760

Gearbox			GFL14
7.150	J	[kgcm²]	344.000
7.777	J	[kgcm²]	321.000
8.800	J	[kgcm²]	247.000
9.571	J	[kgcm²]	232.000
11.538	J	[kgcm²]	242.000
13.000	J	[kgcm²]	225.000
14.200	J	[kgcm²]	625.000
15.620	J	[kgcm²]	156.000
17.600	J	[kgcm²]	146.000
19.948	J	[kgcm²]	111.000
22.476	J	[kgcm²]	105.000
24.456	J	[kgcm²]	83.200
27.556	J	[kgcm²]	79.400
32.344	J	[kgcm²]	52.900
36.444	J	[kgcm²]	50.700
39.642	J	[kgcm²]	38.000
44.667	J	[kgcm²]	36.600
52.067	J	[kgcm²]	24.600
58.667	J	[kgcm²]	23.800
63.190	J	[kgcm²]	18.000
71.200	J	[kgcm²]	17.400
79.875	J	[kgcm²]	11.800
90.000	J	[kgcm²]	11.500

► The moments of inertia relate to the drive shaft of the gearbox.
► The total moment of inertia is calculated by adding the values of the gearbox, motor and accessories.

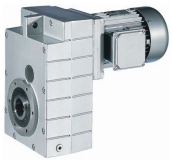

Moments of inertia

GFL□□-3

► Moment of inertia (J) depending on ratio i

Gearbox			GFL05
61.653	J	[kgcm²]	0.202
78.639	J	[kgcm²]	0.145
90.123	J	[kgcm²]	0.197
101.547	J	[kgcm²]	0.196
114.952	J	[kgcm²]	0.142
129.524	J	[kgcm²]	0.141
140.817	J	[kgcm²]	0.109
158.667	J	[kgcm²]	0.109
177.027	J	[kgcm²]	0.073
199.467	J	[kgcm²]	0.073
227.989	J	[kgcm²]	0.051
256.889	J	[kgcm²]	0.050
288.948	J	[kgcm²]	0.033
325.576	J	[kgcm²]	0.033
362.100	J	[kgcm²]	0.023
408.000	J	[kgcm²]	0.023
477.052	J	[kgcm²]	0.014
537.524	J	[kgcm²]	0.014

Gearbox			GFL06
66.213	J	[kgcm²]	0.292
72.000	J	[kgcm²]	0.264
81.111	J	[kgcm²]	0.259
88.200	J	[kgcm²]	0.190
99.361	J	[kgcm²]	0.187
116.571	J	[kgcm²]	0.091
131.323	J	[kgcm²]	0.208
144.320	J	[kgcm²]	0.110
162.583	J	[kgcm²]	0.109
179.520	J	[kgcm²]	0.102
202.237	J	[kgcm²]	0.101
231.200	J	[kgcm²]	0.068
260.457	J	[kgcm²]	0.067
293.018	J	[kgcm²]	0.044
299.200	J	[kgcm²]	0.064
367.200	J	[kgcm²]	0.030
413.667	J	[kgcm²]	0.030
475.200	J	[kgcm²]	0.029
535.333	J	[kgcm²]	0.028
576.720	J	[kgcm²]	0.028
649.700	J	[kgcm²]	0.028
759.806	J	[kgcm²]	0.017
855.954	J	[kgcm²]	0.017

Gearbox			GFL07
65.306	J	[kgcm²]	0.790
72.452	J	[kgcm²]	0.894
81.636	J	[kgcm²]	0.880
92.413	J	[kgcm²]	0.609
104.127	J	[kgcm²]	0.601
113.206	J	[kgcm²]	0.448
127.556	J	[kgcm²]	0.442
147.347	J	[kgcm²]	0.275
166.025	J	[kgcm²]	0.271
183.285	J	[kgcm²]	0.194
206.519	J	[kgcm²]	0.192
224.636	J	[kgcm²]	0.180
253.111	J	[kgcm²]	0.179
290.706	J	[kgcm²]	0.112
327.556	J	[kgcm²]	0.111
352.811	J	[kgcm²]	0.081
397.533	J	[kgcm²]	0.080
430.222	J	[kgcm²]	0.104
522.133	J	[kgcm²]	0.075
562.391	J	[kgcm²]	0.073
633.680	J	[kgcm²]	0.073
718.786	J	[kgcm²]	0.047
809.900	J	[kgcm²]	0.046

Gearbox			GFL09
63.326	J	[kgcm²]	2.344
73.173	J	[kgcm²]	2.472
82.465	J	[kgcm²]	2.428
93.333	J	[kgcm²]	1.679
105.185	J	[kgcm²]	1.651
114.333	J	[kgcm²]	1.230
128.852	J	[kgcm²]	1.212
148.815	J	[kgcm²]	0.773
167.712	J	[kgcm²]	0.762
185.111	J	[kgcm²]	0.548
208.617	J	[kgcm²]	0.541
224.778	J	[kgcm²]	0.505
253.321	J	[kgcm²]	0.500
290.889	J	[kgcm²]	0.313
327.827	J	[kgcm²]	0.310
353.033	J	[kgcm²]	0.226
397.863	J	[kgcm²]	0.224
424.247	J	[kgcm²]	0.286
514.881	J	[kgcm²]	0.208
554.470	J	[kgcm²]	0.201
624.879	J	[kgcm²]	0.200
700.875	J	[kgcm²]	0.130
789.875	J	[kgcm²]	0.129

► The moments of inertia relate to the drive shaft of the gearbox.
► The total moment of inertia is calculated by adding the values of the gearbox, motor and accessories.

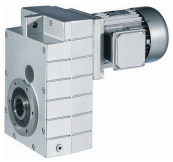

Moments of inertia

GFL□□-3

► Moment of inertia (J) depending on ratio i

Gearbox			GFL11
65.306	J	[kgcm²]	6.967
73.335	J	[kgcm²]	7.844
82.631	J	[kgcm²]	7.707
93.540	J	[kgcm²]	5.050
105.397	J	[kgcm²]	4.965
114.586	J	[kgcm²]	3.712
129.111	J	[kgcm²]	3.656
149.144	J	[kgcm²]	2.299
168.049	J	[kgcm²]	2.265
182.792	J	[kgcm²]	1.661
205.963	J	[kgcm²]	1.639
224.636	J	[kgcm²]	1.515
253.111	J	[kgcm²]	1.501
267.259	J	[kgcm²]	1.865
327.556	J	[kgcm²]	1.373
358.077	J	[kgcm²]	0.679
403.467	J	[kgcm²]	0.673
430.222	J	[kgcm²]	0.853
522.133	J	[kgcm²]	0.623
562.391	J	[kgcm²]	0.599
633.680	J	[kgcm²]	0.596
710.888	J	[kgcm²]	0.385
801.000	J	[kgcm²]	0.384

Gearbox			GFL14
64.296	J	[kgcm²]	26.316
68.708	J	[kgcm²]	19.862
77.418	J	[kgcm²]	19.381
85.037	J	[kgcm²]	21.590
104.889	J	[kgcm²]	9.324
114.126	J	[kgcm²]	8.318
128.593	J	[kgcm²]	8.144
136.889	J	[kgcm²]	16.779
156.148	J	[kgcm²]	5.917
170.074	J	[kgcm²]	6.962
202.074	J	[kgcm²]	3.692
224.636	J	[kgcm²]	4.742
253.111	J	[kgcm²]	4.697
273.778	J	[kgcm²]	5.759
332.444	J	[kgcm²]	4.300
352.811	J	[kgcm²]	2.163
397.533	J	[kgcm²]	2.145
430.222	J	[kgcm²]	2.727
522.133	J	[kgcm²]	1.984
562.391	J	[kgcm²]	1.910
633.680	J	[kgcm²]	1.903
710.888	J	[kgcm²]	1.259
801.000	J	[kgcm²]	1.254

► The moments of inertia relate to the drive shaft of the gearbox.
► The total moment of inertia is calculated by adding the values of the gearbox, motor and accessories.

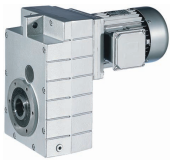

Weights

GFL□□-2M HAR / HBR

			063C11	063C12	063C31	063C32	063C42	071C11	071C13 071C31	071C32	071C33 071C42	080C13 080C32 080C33	090C12	090C32
GFL04	m	[kg]	11	12	11	12		14		13	14	19		
GFL05	m	[kg]					25	27	28	27	28	32	38	40
GFL06	m	[kg]					41		43	42	43	47	54	56
GFL07	m	[kg]										75	81	83
GFL09	m	[kg]											130	132

			100C12	100C32	112C22	132C12	132C22	160C22	160C32	180C12	180C32	180C42	225C12	225C22
GFL05	m	[kg]	46	49										
GFL06	m	[kg]	62	64	77	99	106							
GFL07	m	[kg]	89	91	104	127	134	177	192					
GFL09	m	[kg]	138	141	153	177	184	227	242	293	298	318		
GFL11	m	[kg]	231	233	245	267	274	317	332	383	388	408	608	628
GFL14	m	[kg]			396	417	424	467	482	533	538	558	755	775

GFL□□-2M HCR / HDR

			063C11	063C12	063C31	063C32	063C42	071C11	071C13 071C31	071C32	071C33 071C42	080C13 080C32 080C33	090C12	090C32
GFL04	m	[kg]	10	11	10	11		13		12	13	18		
GFL05	m	[kg]					24	26				31	37	39
GFL06	m	[kg]					38		40	39	40	45	51	53
GFL07	m	[kg]										71	77	79
GFL09	m	[kg]											123	125

			100C12	100C32	112C22	132C12	132C22	160C22	160C32	180C12	180C32	180C42	225C12	225C22
GFL05	m	[kg]	45	47										
GFL06	m	[kg]	59	62	74	97	104							
GFL07	m	[kg]	85	87	100	123	130	173	188					
GFL09	m	[kg]	131	134	146	170	177	220	235	286	291	311		
GFL11	m	[kg]	217	219	231	253	260	303	318	369	374	394	594	614
GFL14	m	[kg]			373	394	401	444	459	510	515	535	732	752

► Weights with oil filling for mounting position A; all values are approximate.
The weights relate to the basic version. Bear in mind that additional weights may be needed, e.g. for motor options.

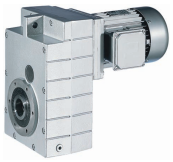

Weights

GFL□□-2M HAK

			063C11 063C12 063C31 063C32	063C42	071C11	071C13 071C31	071C32	071C33	071C42	080C13 080C32 080C33	090C12	090C32	100C12
GFL04	m	[kg]	14		16	17	16	17	16	22			
GFL05	m	[kg]		29	31	32	31	32		36	42	44	50
GFL06	m	[kg]		48		50	49	50		54	61	63	69
GFL07	m	[kg]								86	92	94	100
GFL09	m	[kg]									146	148	154
GFL11	m	[kg]											255

			100C32	112C22	132C12	132C22	160C22	160C32	180C12	180C32	180C42	225C12	225C22
GFL05	m	[kg]	53										
GFL06	m	[kg]	71	84	106	113							
GFL07	m	[kg]	102	115	138	145	188	203					
GFL09	m	[kg]	157	169	193	200	243	258	309	314	334		
GFL11	m	[kg]	257	269	291	298	341	356	407	412	432	632	652
GFL14	m	[kg]		429	450	457	500	515	566	571	591	788	808

GFL□□-2M HCK

			063C11 063C12 063C31 063C32	063C42	071C11	071C13 071C31	071C32	071C33	071C42	080C13 080C32 080C33	090C12	090C32	100C12
GFL04	m	[kg]	13		15	16	15	16	15	21			
GFL05	m	[kg]		28			30			35	41	43	49
GFL06	m	[kg]		45		47	46	47		52	58	60	66
GFL07	m	[kg]								82	88	90	96
GFL09	m	[kg]									139	141	147
GFL11	m	[kg]											241

			100C32	112C22	132C12	132C22	160C22	160C32	180C12	180C32	180C42	225C12	225C22
GFL05	m	[kg]	51										
GFL06	m	[kg]	69	81	104	111							
GFL07	m	[kg]	98	111	134	141	184	199					
GFL09	m	[kg]	150	162	186	193	236	251	302	307	327		
GFL11	m	[kg]	243	255	277	284	327	342	393	398	418	618	638
GFL14	m	[kg]		406	427	434	477	492	543	548	568	765	785

► Weights with oil filling for mounting position A; all values are approximate.
The weights relate to the basic version. Bear in mind that additional weights may be needed, e.g. for motor options.

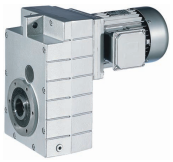

Weights

GFL□□-2M VAR / VBR

			063C11 063C12 063C31 063C32	063C42	071C11	071C13 071C31	071C32	071C33 071C42	080C13 080C32 080C33	090C12	090C32	100C12	100C32
GFL04	m	[kg]	12		14	15	14	15	20	25	27		
GFL05	m	[kg]		26	28	29	28	29	33	39	41	47	50
GFL06	m	[kg]		43		45	44	45	50	56	58	64	67
GFL07	m	[kg]							80	86	88	94	96
GFL09	m	[kg]								138	140	146	149
GFL11	m	[kg]										247	249

			112C22	132C12	132C22	160C22	160C32	180C12	180C32	180C42	225C12	225C22
GFL06	m	[kg]	79	102	109							
GFL07	m	[kg]	109	132	139	182	197					
GFL09	m	[kg]	161	185	192	235	250	301	306	326		
GFL11	m	[kg]	261	283	290	333	348	399	404	424	624	644
GFL14	m	[kg]	429	450	457	500	515	566	571	591	788	808

GFL□□-2M VCR / VDR

			063C11 063C12 063C31 063C32	063C42	071C11	071C13 071C31	071C32	071C33 071C42	080C13 080C32 080C33	090C12	090C32	100C12	100C32
GFL04	m	[kg]	11		13	14	13	14	19	24	26		
GFL05	m	[kg]		25	27				32	38	40	46	48
GFL06	m	[kg]		41		43	42	43	47	54	56	62	64
GFL07	m	[kg]							76	82	84	90	92
GFL09	m	[kg]								131	133	139	142
GFL11	m	[kg]										233	235

			112C22	132C12	132C22	160C22	160C32	180C12	180C32	180C42	225C12	225C22
GFL06	m	[kg]	77	99	106							
GFL07	m	[kg]	105	128	135	178	193					
GFL09	m	[kg]	154	178	185	228	243	294	299	319		
GFL11	m	[kg]	247	269	276	319	334	385	390	410	610	630
GFL14	m	[kg]	406	427	434	477	492	543	548	568	765	785

► Weights with oil filling for mounting position A; all values are approximate.
The weights relate to the basic version. Bear in mind that additional weights may be needed, e.g. for motor options.

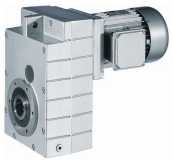

Weights

GFL□□-2M VAK

			063C11	063C12	063C31	063C32	063C42	071C11	071C13 071C31	071C32	071C33 071C42	080C13 080C32 080C33	090C12	090C32
GFL04	m	[kg]	14	15	14	15		17		16	17	22	28	30
GFL05	m	[kg]					30	32	33	32	33	37	43	45
GFL06	m	[kg]					50		52	51	52	57	63	65
GFL07	m	[kg]										91	97	99
GFL09	m	[kg]											154	156

			100C12	100C32	112C22	132C12	132C22	160C22	160C32	180C12	180C32	180C42	225C12	225C22
GFL05	m	[kg]	51	54										
GFL06	m	[kg]	71	74	86	109	116							
GFL07	m	[kg]	105	107	120	143	150	193	208					
GFL09	m	[kg]	162	165	177	201	208	251	266	317	322	342		
GFL11	m	[kg]	271	273	285	307	314	357	372	423	428	448	648	668
GFL14	m	[kg]			462	483	490	533	548	599	604	624	821	841

GFL□□-2M VCK

			063C11	063C12	063C31	063C32	063C42	071C11	071C13 071C31	071C32	071C33 071C42	080C13 080C32 080C33	090C12	090C32
GFL04	m	[kg]	13	14	13	14		16		15	16	21	27	29
GFL05	m	[kg]					29	31				36	42	44
GFL06	m	[kg]					48		50	49	50	54	61	63
GFL07	m	[kg]										87	93	95
GFL09	m	[kg]											147	149

			100C12	100C32	112C22	132C12	132C22	160C22	160C32	180C12	180C32	180C42	225C12	225C22
GFL05	m	[kg]	50	52										
GFL06	m	[kg]	69	71	84	106	113							
GFL07	m	[kg]	101	103	116	139	146	189	204					
GFL09	m	[kg]	155	158	170	194	201	244	259	310	315	335		
GFL11	m	[kg]	257	259	271	293	300	343	358	409	414	434	634	654
GFL14	m	[kg]			439	460	467	510	525	576	581	601	798	818

► Weights with oil filling for mounting position A; all values are approximate.
The weights relate to the basic version. Bear in mind that additional weights may be needed, e.g. for motor options.

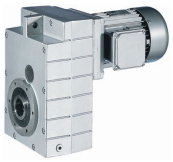

Weights

GFL□□-2M SAR / SBR

			063C11 063C12 063C31 063C32	063C42	071C11	071C13 071C31	071C32	071C33 071C42	080C13	080C32	080C33	090C12	090C32	100C12
GFL04	m	[kg]	12		14	15	14	15	20	22	20	28	30	
GFL05	m	[kg]		26	28	29	28	29		33		39	41	47
GFL06	m	[kg]		42		44	43	44		48		55	57	63
GFL07	m	[kg]								76		82	84	90
GFL09	m	[kg]										133	135	141
GFL11	m	[kg]												236

			100C32	112C22	132C12	132C22	160C22	160C32	180C12	180C32	180C42	225C12	225C22
GFL05	m	[kg]	50										
GFL06	m	[kg]	65	78	100	107							
GFL07	m	[kg]	93	106	128	135	178	193					
GFL09	m	[kg]	144	156	180	187	230	245	296	301	321		
GFL11	m	[kg]	238	250	272	279	322	337	388	393	413	613	633
GFL14	m	[kg]		407	428	435	478	493	544	549	569	766	786

GFL□□-2M SCR / SDR

			063C11 063C12 063C31 063C32	063C42	071C11	071C13 071C31	071C32	071C33 071C42	080C13 080C32 080C33	090C12	090C32	100C12	100C32
GFL04	m	[kg]	11		13	14	13	14	19	24	26		
GFL05	m	[kg]		25	27		26	27	32	38	40	46	48
GFL06	m	[kg]		39		41	40	41	46	52	54	60	63
GFL07	m	[kg]							72	78	80	86	89
GFL09	m	[kg]								126	128	134	137
GFL11	m	[kg]										222	224

			112C22	132C12	132C22	160C22	160C32	180C12	180C32	180C42	225C12	225C22
GFL06	m	[kg]	75	98	105							
GFL07	m	[kg]	102	124	131	174	189					
GFL09	m	[kg]	149	173	180	223	238	289	294	314		
GFL11	m	[kg]	236	258	265	308	323	374	379	399	599	619
GFL14	m	[kg]	384	405	412	455	470	521	526	546	743	763

► Weights with oil filling for mounting position A; all values are approximate.
The weights relate to the basic version. Bear in mind that additional weights may be needed, e.g. for motor options.

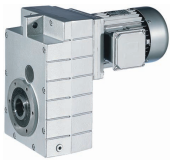

Weights

GFL□□-2M SAK

			063C42	071C11	071C13 071C31	071C32	071C33 071C42	080C13 080C32 080C33	090C12	090C32	100C12	100C32
GFL05	m	[kg]	30	32	33	32	33	37	43	45	51	54
GFL06	m	[kg]	49		51	50	51	55	62	64	70	72
GFL07	m	[kg]						87	93	95	101	104
GFL09	m	[kg]							149	151	157	160
GFL11	m	[kg]									260	262

			112C22	132C12	132C22	160C22	160C32	180C12	180C32	180C42	225C12	225C22
GFL06	m	[kg]	85	107	114							
GFL07	m	[kg]	117	139	146	189	204					
GFL09	m	[kg]	172	196	203	246	261	312	317	337		
GFL11	m	[kg]	274	296	303	346	361	412	417	437	637	657
GFL14	m	[kg]	440	461	468	511	526	577	582	602	799	819

GFL□□-2M SCK

			063C42	071C11	071C13 071C31	071C32	071C33 071C42	080C13 080C32 080C33	090C12	090C32	100C12	100C32
GFL05	m	[kg]	29	31		30	31	36	42	44	50	52
GFL06	m	[kg]	46		48	47	48	53	59	61	67	70
GFL07	m	[kg]						83	89	91	97	100
GFL09	m	[kg]							142	144	150	153
GFL11	m	[kg]									246	248

			112C22	132C12	132C22	160C22	160C32	180C12	180C32	180C42	225C12	225C22
GFL06	m	[kg]	82	105	112							
GFL07	m	[kg]	113	135	142	185	200					
GFL09	m	[kg]	165	189	196	239	254	305	310	330		
GFL11	m	[kg]	260	282	289	332	347	398	403	423	623	643
GFL14	m	[kg]	417	438	445	488	503	554	559	579	776	796

► Weights with oil filling for mounting position A; all values are approximate.
The weights relate to the basic version. Bear in mind that additional weights may be needed, e.g. for motor options.

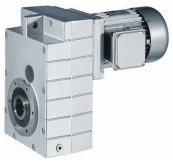

Weights

GFL□□-3M HAR / HBR

			063C11 063C12 063C31 063C32	063C42	071C11	071C13 071C31	071C32	071C33	071C42	080C13	080C32 080C33
GFL05	m	[kg]	26		28	29	28	29	28	34	
GFL06	m	[kg]	44		46					51	
GFL07	m	[kg]		76	78					83	
GFL09	m	[kg]		130	132	133	132	133	132	137	
GFL11	m	[kg]								237	

			090C12	090C32	100C12	100C32	112C22	132C12	132C22	160C22	160C32
GFL06	m	[kg]	57								
GFL07	m	[kg]	89	91	97						
GFL09	m	[kg]	143	145	151	154	167				
GFL11	m	[kg]	243	245	251	254	267	290	297		
GFL14	m	[kg]	409	411	417	419	432	455	462	505	520

GFL□□-3M HCR / HDR

			063C11	063C12	063C31	063C32	063C42	071C11	071C13 071C31	071C32	071C33	071C42	080C13
GFL05	m	[kg]	24	25	24	25		27		26	27		32
GFL06	m	[kg]	41				42	43	44	43	44		49
GFL07	m	[kg]					72	74					79
GFL09	m	[kg]					123	125	126	125	126	125	130
GFL11	m	[kg]											223

			080C32 080C33	090C12	090C32	100C12	100C32	112C22	132C12	132C22	160C22	160C32
GFL06	m	[kg]	49	54								
GFL07	m	[kg]	79	85	87	93						
GFL09	m	[kg]	130	136	138	144	147	160				
GFL11	m	[kg]	223	229	231	237	240	253	276	283		
GFL14	m	[kg]		386	388	394	396	409	432	439	482	497

► Weights with oil filling for mounting position A; all values are approximate.
The weights relate to the basic version. Bear in mind that additional weights may be needed, e.g. for motor options.

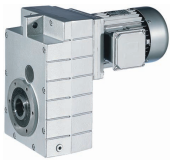

Weights

GFL□□-3M HAK

			063C11 063C12 063C31 063C32	063C42	071C11	071C13 071C31	071C32	071C33	071C42	080C13	080C32 080C33
GFL05	m	[kg]	30		32	33	32	33	32	38	
GFL06	m	[kg]	51		53					58	
GFL07	m	[kg]		87	89					94	
GFL09	m	[kg]		146	148	149	148	149	148	153	
GFL11	m	[kg]								261	

			090C12	090C32	100C12	100C32	112C22	132C12	132C22	160C22	160C32
GFL06	m	[kg]	64								
GFL07	m	[kg]	100	102	108						
GFL09	m	[kg]	159	161	167	170	183				
GFL11	m	[kg]	267	269	275	278	291	314	321		
GFL14	m	[kg]	442	444	450	452	465	488	495	538	553

GFL□□-3M HCK

			063C11	063C12	063C31	063C32	063C42	071C11	071C13 071C31	071C32	071C33	071C42	080C13
GFL05	m	[kg]	28	29	28	29		31		30	31		36
GFL06	m	[kg]	48				49	50	51	50	51		56
GFL07	m	[kg]					83	85					90
GFL09	m	[kg]					139	141	142	141	142	141	146
GFL11	m	[kg]											247

			080C32 080C33	090C12	090C32	100C12	100C32	112C22	132C12	132C22	160C22	160C32
GFL06	m	[kg]	56	61								
GFL07	m	[kg]	90	96	98	104						
GFL09	m	[kg]	146	152	154	160	163	176				
GFL11	m	[kg]	247	253	255	261	264	277	300	307		
GFL14	m	[kg]		419	421	427	429	442	465	472	515	530

► Weights with oil filling for mounting position A; all values are approximate.
The weights relate to the basic version. Bear in mind that additional weights may be needed, e.g. for motor options.

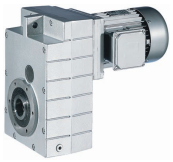

Weights

GFL□□-3M VAR / VBR

			063C11 063C12 063C31 063C32	063C42	071C11	071C13 071C31	071C32	071C33	071C42	080C13	080C32 080C33
GFL05	m	[kg]	27		29	30	29	30	29	35	
GFL06	m	[kg]	46	47	48	49	48	49		54	
GFL07	m	[kg]		81	83					88	
GFL09	m	[kg]		138	140	141	140	141	140	145	
GFL11	m	[kg]								253	

			090C12	090C32	100C12	100C32	112C22	132C12	132C22	160C22	160C32
GFL06	m	[kg]	59								
GFL07	m	[kg]	94	96	102						
GFL09	m	[kg]	151	153	159	162	175				
GFL11	m	[kg]	259	261	267	270	283	306	313		
GFL14	m	[kg]	442	444	450	452	465	488	495	538	553

GFL□□-3M VCR / VDR

			063C11	063C12	063C31	063C32	063C42	071C11	071C13 071C31	071C32	071C33	071C42	080C13
GFL05	m	[kg]	25	26	25	26		28		27	28		33
GFL06	m	[kg]	44					46					51
GFL07	m	[kg]					77	79					84
GFL09	m	[kg]					131	133	134	133	134	133	138
GFL11	m	[kg]											239

			080C32 080C33	090C12	090C32	100C12	100C32	112C22	132C12	132C22	160C22	160C32
GFL06	m	[kg]	51	57								
GFL07	m	[kg]	84	90	92	98						
GFL09	m	[kg]	138	144	146	152	155	168				
GFL11	m	[kg]	239	245	247	253	256	269	292	299		
GFL14	m	[kg]		419	421	427	429	442	465	472	515	530

► Weights with oil filling for mounting position A; all values are approximate.
The weights relate to the basic version. Bear in mind that additional weights may be needed, e.g. for motor options.

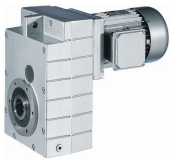

Weights

GFL□□-3M VAK

			063C11 063C12 063C31 063C32	063C42	071C11	071C13 071C31	071C32	071C33	071C42	080C13	080C32 080C33
GFL05	m	[kg]	31		33	34	33	34	33	39	
GFL06	m	[kg]	53	54	55	56	55	56		61	
GFL07	m	[kg]		92	94					99	
GFL09	m	[kg]		154	156	157	156	157	156	161	
GFL11	m	[kg]								277	

			090C12	090C32	100C12	100C32	112C22	132C12	132C22	160C22	160C32
GFL06	m	[kg]	66								
GFL07	m	[kg]	105	107	113						
GFL09	m	[kg]	167	169	175	178	191				
GFL11	m	[kg]	283	285	291	294	307	330	337		
GFL14	m	[kg]	475	477	483	485	498	521	528	571	586

GFL□□-3M VCK

			063C11	063C12	063C31	063C32	063C42	071C11	071C13 071C31	071C32	071C33	071C42	080C13
GFL05	m	[kg]	29	30	29	30		32		31	32		37
GFL06	m	[kg]	51					53					58
GFL07	m	[kg]					88	90					95
GFL09	m	[kg]					147	149	150	149	150	149	154
GFL11	m	[kg]											263

			080C32 080C33	090C12	090C32	100C12	100C32	112C22	132C12	132C22	160C22	160C32
GFL06	m	[kg]	58	64								
GFL07	m	[kg]	95	101	103	109						
GFL09	m	[kg]	154	160	162	168	171	184				
GFL11	m	[kg]	263	269	271	277	280	293	316	323		
GFL14	m	[kg]		452	454	460	462	475	498	505	548	563

► Weights with oil filling for mounting position A; all values are approximate.
The weights relate to the basic version. Bear in mind that additional weights may be needed, e.g. for motor options.

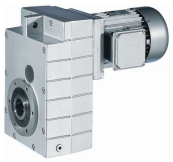

Weights

GFL□□-3M SAR / SBR

			063C11 063C12 063C31 063C32	063C42	071C11	071C13 071C31	071C32	071C33	071C42	080C13	080C32 080C33
GFL05	m	[kg]	27				29			34	
GFL06	m	[kg]	45				47			52	
GFL07	m	[kg]		77	79	80	79	80		84	
GFL09	m	[kg]		133	135	136	135	136	135	140	
GFL11	m	[kg]								242	

			090C12	090C32	100C12	100C32	112C22	132C12	132C22	160C22	160C32
GFL06	m	[kg]	58								
GFL07	m	[kg]	90	92	98						
GFL09	m	[kg]	146	148	154	157	170				
GFL11	m	[kg]	248	250	256	259	272	295	302		
GFL14	m	[kg]	420	422	428	430	443	466	473	516	531

GFL□□-3M SCR / SDR

			063C11 063C12 063C31 063C32	063C42	071C11	071C13 071C31	071C32	071C33	071C42	080C13	080C32 080C33
GFL05	m	[kg]	25	26	27	28	27	28		33	
GFL06	m	[kg]	42	43	44	45	44	45		50	
GFL07	m	[kg]		73	75	76	75	76		80	
GFL09	m	[kg]		126	128	129	128	129	128	133	
GFL11	m	[kg]								228	

			090C12	090C32	100C12	100C32	112C22	132C12	132C22	160C22	160C32
GFL06	m	[kg]	55								
GFL07	m	[kg]	86	88	94						
GFL09	m	[kg]	139	141	147	150	163				
GFL11	m	[kg]	234	236	242	245	258	281	288		
GFL14	m	[kg]	397	399	405	407	420	443	450	493	508

► Weights with oil filling for mounting position A; all values are approximate.
The weights relate to the basic version. Bear in mind that additional weights may be needed, e.g. for motor options.

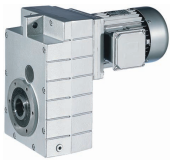

Weights

GFL□□-3M SAK

			063C11 063C12 063C31 063C32	063C42	071C11	071C13 071C31	071C32	071C33	071C42	080C13	080C32 080C33
GFL05	m	[kg]	31				33			38	
GFL06	m	[kg]	52				54			59	
GFL07	m	[kg]		88	90	91	90	91		95	
GFL09	m	[kg]		149	151	152	151	152	151	156	
GFL11	m	[kg]								266	

			090C12	090C32	100C12	100C32	112C22	132C12	132C22	160C22	160C32
GFL06	m	[kg]	65								
GFL07	m	[kg]	101	103	109						
GFL09	m	[kg]	162	164	170	173	186				
GFL11	m	[kg]	272	274	280	283	296	319	326		
GFL14	m	[kg]	453	455	461	463	476	499	506	549	564

GFL□□-3M SCK

			063C11 063C12 063C31 063C32	063C42	071C11	071C13 071C31	071C32	071C33	071C42	080C13	080C32 080C33
GFL05	m	[kg]	29	30	31	32	31	32		37	
GFL06	m	[kg]	49	50	51	52	51	52		57	
GFL07	m	[kg]		84	86	87	86	87		91	
GFL09	m	[kg]		142	144	145	144	145	144	149	
GFL11	m	[kg]								252	

			090C12	090C32	100C12	100C32	112C22	132C12	132C22	160C22	160C32
GFL06	m	[kg]	62								
GFL07	m	[kg]	97	99	105						
GFL09	m	[kg]	155	157	163	166	179				
GFL11	m	[kg]	258	260	266	269	282	305	312		
GFL14	m	[kg]	430	432	438	440	453	476	483	526	541

► Weights with oil filling for mounting position A; all values are approximate.
The weights relate to the basic version. Bear in mind that additional weights may be needed, e.g. for motor options.

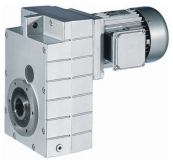

Selection tables

50 Hz, 60 Hz: P_N = 0.12 kW

n_N	1425 r/min				1735 r/min			i		
f_N	50 Hz				60 Hz					
	n_2 [r/min]	M_2 [Nm]	c		n_2 [r/min]	M_2 [Nm]	c			
	203	5.5	5.4		246	4.5	6.2	7.025	GFL04-2M □□□063C12	108
	89	13	5.4		107	10	6.2	16.087	GFL04-2M □□□063C12	108
	80	14	5.4		96	11	6.2	17.920	GFL04-2M □□□063C12	108
	69	16	5.0		84	13	5.8	20.519	GFL04-2M □□□063C12	108
	62	18	5.0		76	15	5.8	22.857	GFL04-2M □□□063C12	108
	45	25	5.5		55	20	6.7	31.600	GFL04-2M □□□063C12	108
	40	27	5.5		49	23	6.7	35.200	GFL04-2M □□□063C12	108
	35	32	4.6		42	26	5.6	40.697	GFL04-2M □□□063C12	108
	31	35	4.6		38	29	5.6	45.333	GFL04-2M □□□063C12	108
	28	40	4.0		33	33	4.9	51.579	GFL04-2M □□□063C12	108
	25	45	3.9		30	37	4.7	57.455	GFL04-2M □□□063C12	108
	22	50	3.2		27	41	4.0	64.636	GFL04-2M □□□063C12	108
	20	56	3.2		24	46	3.8	72.000	GFL04-2M □□□063C12	108
	17	66	1.6		20	55	1.9	85.156	GFL04-2M □□□063C12	108
	15	74	1.6		18	61	1.9	94.857	GFL04-2M □□□063C12	108
	14	78	4.2		17	64	5.1	101.547	GFL05-3M □□□063C12	124
	12	88	3.7		15	73	4.5	114.952	GFL05-3M □□□063C12	124
	11	100	3.3		13	82	4.0	129.524	GFL05-3M □□□063C12	124
	9.9	111	5.0		12	91	6.1	144.320	GFL06-3M □□□063C12	124
	8.8	125	4.9		11	103	6.0	162.583	GFL06-3M □□□063C12	124
	8.1	136	2.5		9.7	112	3.1	177.027	GFL05-3M □□□063C12	124
	7.1	153	2.1		8.7	126	2.6	199.467	GFL05-3M □□□063C12	124
	6.3	175	2.0		7.6	144	2.4	227.989	GFL05-3M □□□063C12	124
	5.6	197	1.7		6.7	162	2.0	256.889	GFL05-3M □□□063C12	124
	5.5	200	3.1		6.6	164	3.7	260.457	GFL06-3M □□□063C12	124
	4.9	222	1.6		6.0	182	1.9	288.948	GFL05-3M □□□063C12	124
	4.9	225	2.9		5.9	185	3.6	293.018	GFL06-3M □□□063C12	124
	4.8	230	2.7		5.8	189	3.2	299.200	GFL06-3M □□□063C12	124
	4.4	250	1.3		5.3	206	1.6	325.576	GFL05-3M □□□063C12	124
	3.9	278	1.2		4.8	229	1.5	362.100	GFL05-3M □□□063C12	124
	3.9	282	2.3		4.7	232	2.8	367.200	GFL06-3M □□□063C12	124
	3.5	314	1.0		4.2	258	1.3	408.000	GFL05-3M □□□063C12	124
	3.4	318	1.9		4.2	261	2.4	413.667	GFL06-3M □□□063C12	124
	3.0	365	1.8		3.6	300	2.2	475.200	GFL06-3M □□□063C12	124
	3.0	367	0.9		3.6	301	1.1	477.052	GFL05-3M □□□063C12	124
	2.7	411	1.5		3.2	338	1.8	535.333	GFL06-3M □□□063C12	124
					3.2	339	1.0	537.524	GFL05-3M □□□063C12	124
	2.5	443	1.4		3.0	364	1.7	576.720	GFL06-3M □□□063C12	124
	2.2	499	1.2		2.7	410	1.5	649.700	GFL06-3M □□□063C12	124
	1.9	584	0.9		2.3	480	1.1	759.806	GFL06-3M □□□063C12	124

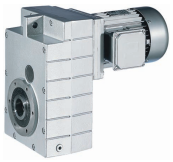

Selection tables

50 Hz, 60 Hz: P_N = 0.12 kW

n_N	1425 r/min				1735 r/min			i		
f_N	50 Hz				60 Hz					
	n_2 [r/min]	M_2 [Nm]	c		n_2 [r/min]	M_2 [Nm]	c			
	1.7	658	0.9		2.0	540	1.0	855.954	GFL06-3M □□□063C12	124

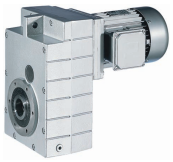

Selection tables

50 Hz, 60 Hz: P_N = 0.18 kW

n_N	2740 r/min				3370 r/min			i		
f_N	50 Hz				60 Hz					
	n_2 [r/min]	M_2 [Nm]	c		n_2 [r/min]	M_2 [Nm]	c			
	390	4.3	5.6		475	3.5	6.5	7.025	GFL04-2M □□□063C11	108
	170	9.8	5.6		208	8.0	6.5	16.087	GFL04-2M □□□063C11	108
	153	11	5.6		186	8.9	6.5	17.920	GFL04-2M □□□063C11	108
	134	12	5.2		163	10	6.0	20.519	GFL04-2M □□□063C11	108
	120	14	5.2		146	11	6.0	22.857	GFL04-2M □□□063C11	108
	67	25	5.5		82	20	6.3	40.697	GFL04-2M □□□063C11	108
	60	28	5.5		74	22	6.3	45.333	GFL04-2M □□□063C11	108
	53	31	4.8		65	26	5.5	51.579	GFL04-2M □□□063C11	108
	48	35	4.6		58	28	5.3	57.455	GFL04-2M □□□063C11	108
	42	39	3.9		52	32	4.4	64.636	GFL04-2M □□□063C11	108
	38	44	4.0		46	36	4.8	72.000	GFL04-2M □□□063C11	108
	32	52	2.0		39	42	2.4	85.156	GFL04-2M □□□063C11	108
	29	58	2.0		35	47	2.4	94.857	GFL04-2M □□□063C11	108
	27	61	5.4		33	49	6.4	101.547	GFL05-3M □□□063C11	124
	24	69	4.8		29	56	5.6	114.952	GFL05-3M □□□063C11	124
	21	78	4.2		26	63	5.0	129.524	GFL05-3M □□□063C11	124
	16	106	3.3		19	86	3.8	177.027	GFL05-3M □□□063C11	124
	14	120	2.7		17	97	3.2	199.467	GFL05-3M □□□063C11	124
	12	137	2.5		15	111	3.0	227.989	GFL05-3M □□□063C11	124
	11	154	2.1		13	125	2.5	256.889	GFL05-3M □□□063C11	124
	9.5	173	2.0		12	141	2.4	288.948	GFL05-3M □□□063C11	124
	8.4	195	1.7		10	159	2.0	325.576	GFL05-3M □□□063C11	124
	7.6	217	1.6		9.2	177	1.9	362.100	GFL05-3M □□□063C11	124
	7.5	220	3.0		9.1	179	3.5	367.200	GFL06-3M □□□063C11	124
	6.7	245	1.3		8.2	199	1.6	408.000	GFL05-3M □□□063C11	124
	6.6	248	2.5		8.1	202	2.9	413.667	GFL06-3M □□□063C11	124
	5.8	285	2.3		7.0	232	2.7	475.200	GFL06-3M □□□063C11	124
	5.7	286	1.2		7.0	233	1.4	477.052	GFL05-3M □□□063C11	124
	5.1	321	1.9		6.2	261	2.3	535.333	GFL06-3M □□□063C11	124
	5.1	322	1.0		6.2	262	1.2	537.524	GFL05-3M □□□063C11	124
	4.8	346	1.8		5.8	281	2.1	576.720	GFL06-3M □□□063C11	124
	4.2	390	1.6		5.1	317	1.9	649.700	GFL06-3M □□□063C11	124
	3.6	456	1.1		4.4	370	1.4	759.806	GFL06-3M □□□063C11	124
	3.2	513	1.1		3.9	417	1.3	855.954	GFL06-3M □□□063C11	124

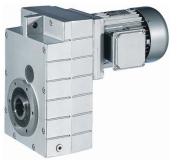

Selection tables

50 Hz, 60 Hz: P_N = 0.18 kW

n_N	1365 r/min				1695 r/min			i		
f_N	50 Hz				60 Hz					
	n_2 [r/min]	M_2 [Nm]	c		n_2 [r/min]	M_2 [Nm]	c			
	194	8.6	3.4		237	6.9	4.1	7.025	GFL04-2M □□□063C32	108
	85	20	3.4		104	16	4.1	16.087	GFL04-2M □□□063C32	108
	76	22	3.4		93	18	4.1	17.920	GFL04-2M □□□063C32	108
	67	25	3.2		81	20	3.8	20.519	GFL04-2M □□□063C32	108
	60	28	3.2		73	22	3.8	22.857	GFL04-2M □□□063C32	108
	43	39	3.5		53	31	4.3	31.600	GFL04-2M □□□063C32	108
	39	43	3.5		47	35	4.3	35.200	GFL04-2M □□□063C32	108
	34	50	2.9		41	40	3.6	40.697	GFL04-2M □□□063C32	108
	30	55	2.9		37	45	3.6	45.333	GFL04-2M □□□063C32	108
	27	63	2.6		32	51	3.2	51.579	GFL04-2M □□□063C32	108
	24	70	2.5		29	57	3.1	57.455	GFL04-2M □□□063C32	108
	22	74	2.8		27	60	3.5	61.653	GFL05-3M □□□063C32	124
	21	79	2.1		26	64	2.6	64.636	GFL04-2M □□□063C32	108
	21	80	3.2		25	64	4.0	66.213	GFL06-3M □□□063C32	124
	19	88	2.0		23	71	2.5	72.000	GFL04-2M □□□063C32	108
	19	87	3.2		23	70	4.0	72.000	GFL06-3M □□□063C32	124
	17	95	2.4		21	76	3.0	78.639	GFL05-3M □□□063C32	124
	17	98	3.2		21	79	4.0	81.111	GFL06-3M □□□063C32	124
	16	104	1.0		20	84	1.2	85.156	GFL04-2M □□□063C32	108
	15	108	2.8		19	87	3.5	90.123	GFL05-3M □□□063C32	124
	14	116	1.0		18	93	1.2	94.857	GFL04-2M □□□063C32	108
	13	122	2.7		16	98	3.3	101.547	GFL05-3M □□□063C32	124
	12	138	2.4		15	111	3.0	114.952	GFL05-3M □□□063C32	124
	12	140	2.9		14	113	3.6	116.571	GFL06-3M □□□063C32	124
	11	156	2.1		13	126	2.6	129.524	GFL05-3M □□□063C32	124
	10	158	3.2		13	127	4.0	131.323	GFL06-3M □□□063C32	124
	9.5	174	3.2		12	140	4.0	144.320	GFL06-3M □□□063C32	124
	8.4	196	3.1		10	158	3.9	162.583	GFL06-3M □□□063C32	124
	7.7	213	1.6		9.4	172	2.0	177.027	GFL05-3M □□□063C32	124
	7.6	216	2.8		9.3	174	3.5	179.520	GFL06-3M □□□063C32	124
	6.8	240	1.4		8.4	193	1.7	199.467	GFL05-3M □□□063C32	124
	6.8	243	2.5		8.2	196	3.1	202.237	GFL06-3M □□□063C32	124
	6.0	274	1.3		7.3	221	1.6	227.989	GFL05-3M □□□063C32	124
	5.9	278	2.3		7.2	224	2.8	231.200	GFL06-3M □□□063C32	124
	5.3	309	1.1		6.5	249	1.3	256.889	GFL05-3M □□□063C32	124
	5.2	313	2.0		6.4	252	2.4	260.457	GFL06-3M □□□063C32	124
	4.7	348	1.0		5.8	280	1.2	288.948	GFL05-3M □□□063C32	124
	4.7	353	1.9		5.7	284	2.3	293.018	GFL06-3M □□□063C32	124
	4.6	360	1.7		5.6	290	2.1	299.200	GFL06-3M □□□063C32	124
	4.2	392	0.8		5.1	316	1.0	325.576	GFL05-3M □□□063C32	124

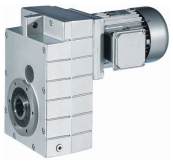

Selection tables

50 Hz, 60 Hz: P_N = 0.18 kW

n_N	1365 r/min				1695 r/min			i		
f_N	50 Hz				60 Hz					
	n_2 [r/min]	M_2 [Nm]	c		n_2 [r/min]	M_2 [Nm]	c			
					4.7	351	1.0	362.100	GFL05-3M □□□063C32	124
	3.7	442	1.5		4.5	356	1.8	367.200	GFL06-3M □□□063C32	124
					4.2	395	0.8	408.000	GFL05-3M □□□063C32	124
	3.3	498	1.2		4.0	401	1.5	413.667	GFL06-3M □□□063C32	124
	2.9	572	1.1		3.5	461	1.4	475.200	GFL06-3M □□□063C32	124
	2.6	644	1.0		3.1	519	1.2	535.333	GFL06-3M □□□063C32	124
	2.4	694	0.9		2.9	559	1.1	576.720	GFL06-3M □□□063C32	124
					2.6	630	1.0	649.700	GFL06-3M □□□063C32	124

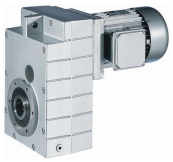

Selection tables

50 Hz, 60 Hz: P_N = 0.18 kW

n_N	930 r/min				1140 r/min			i		
f_N	50 Hz				60 Hz					
	n_2 [r/min]	M_2 [Nm]	c		n_2 [r/min]	M_2 [Nm]	c			
	254	6.6	5.4		309	5.4	6.6	3.659	GFL04-2M □□□071C13	108
	185	9.0	5.4		225	7.3	6.6	5.018	GFL04-2M □□□071C13	108
	159	10	5.4		194	8.5	6.6	5.833	GFL04-2M □□□071C13	108
	145	11	5.4		177	9.4	6.6	6.400	GFL05-2M □□□071C13	108
	111	15	5.4		135	12	6.6	8.379	GFL04-2M □□□071C13	108
	100	17	5.4		121	14	6.6	9.333	GFL04-2M □□□071C13	108
	81	21	5.4		98	17	6.6	11.491	GFL04-2M □□□071C13	108
	73	23	5.4		88	19	6.6	12.800	GFL04-2M □□□071C13	108
	59	29	5.4		71	23	6.6	15.904	GFL05-2M □□□071C13	108
	52	32	5.2		63	26	6.4	17.920	GFL04-2M □□□071C13	108
	45	37	5.0		55	30	6.1	20.519	GFL04-2M □□□071C13	108
	41	41	4.1		49	33	5.0	22.857	GFL04-2M □□□071C13	108
	37	45	4.1		45	37	5.0	25.136	GFL04-2M □□□071C13	108
	33	50	3.3		40	41	4.1	28.000	GFL04-2M □□□071C13	108
	29	57	3.3		36	46	4.0	31.600	GFL04-2M □□□071C13	108
	26	63	2.7		32	51	3.3	35.200	GFL04-2M □□□071C13	108
	23	73	2.6		28	60	3.1	40.697	GFL04-2M □□□071C13	108
	21	81	2.1		25	66	2.6	45.333	GFL04-2M □□□071C13	108
	18	92	2.1		22	75	2.5	51.579	GFL04-2M □□□071C13	108
	16	103	1.7		20	84	2.1	57.455	GFL04-2M □□□071C13	108
	16	105	3.1		19	86	3.8	58.667	GFL05-2M □□□071C13	108
	15	109	1.9		18	89	2.3	61.653	GFL05-3M □□□071C13	124
	15	113	2.5		18	92	3.1	63.190	GFL05-2M □□□071C13	108
	14	116	1.4		18	95	1.7	64.636	GFL04-2M □□□071C13	108
	13	128	2.4		16	104	2.9	71.200	GFL05-2M □□□071C13	108
	13	129	1.4		16	105	1.7	72.000	GFL04-2M □□□071C13	108
	12	139	1.6		14	113	2.0	78.639	GFL05-3M □□□071C13	124
	12	145	1.5		14	118	1.8	80.763	GFL05-2M □□□071C13	108
	12	145	3.0		14	118	3.7	81.000	GFL06-2M □□□071C13	108
	11	156	3.1		13	127	3.8	88.200	GFL06-3M □□□071C13	124
	10	159	1.9		13	130	2.3	90.123	GFL05-3M □□□071C13	124
	10	163	1.4		12	133	1.8	91.000	GFL05-2M □□□071C13	108
	10	164	2.9		12	133	3.6	91.250	GFL06-2M □□□071C13	108
	9.4	176	3.1		11	143	3.8	99.361	GFL06-3M □□□071C13	124
	9.2	179	1.8		11	146	2.2	101.547	GFL05-3M □□□071C13	124
	8.1	203	1.6		9.8	166	2.0	114.952	GFL05-3M □□□071C13	124
	8.0	206	2.6		9.7	168	3.1	116.571	GFL06-3M □□□071C13	124
	7.2	229	1.4		8.7	187	1.8	129.524	GFL05-3M □□□071C13	124
	7.1	232	2.6		8.6	189	3.1	131.323	GFL06-3M □□□071C13	124
	6.6	249	1.4		8.0	203	1.7	140.817	GFL05-3M □□□071C13	124

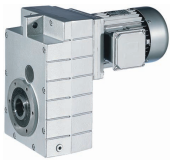

Selection tables

50 Hz, 60 Hz: P_N = 0.18 kW

n_N	930 r/min				1140 r/min			i		
f_N	50 Hz				60 Hz					
	n_2 [r/min]	M_2 [Nm]	c		n_2 [r/min]	M_2 [Nm]	c			
	6.4	255	2.2		7.8	208	2.7	144.320	GFL06-3M □□□071C13	124
	5.9	280	1.2		7.1	229	1.4	158.667	GFL05-3M □□□071C13	124
	5.7	287	2.1		7.0	234	2.6	162.583	GFL06-3M □□□071C13	124
	5.3	313	1.1		6.4	255	1.4	177.027	GFL05-3M □□□071C13	124
	5.2	317	1.9		6.3	259	2.3	179.520	GFL06-3M □□□071C13	124
	4.7	352	0.9		5.7	287	1.1	199.467	GFL05-3M □□□071C13	124
	4.6	357	1.7		5.6	291	2.1	202.237	GFL06-3M □□□071C13	124
	4.1	403	0.9		5.0	329	1.1	227.989	GFL05-3M □□□071C13	124
	4.0	408	1.6		4.9	333	1.9	231.200	GFL06-3M □□□071C13	124
	3.7	447	2.8		4.5	365	3.4	253.111	GFL07-3M □□□071C13	124
	3.6	460	1.3		4.3	375	1.6	260.457	GFL06-3M □□□071C13	124
	3.2	513	2.7		3.9	419	3.3	290.706	GFL07-3M □□□071C13	124
	3.2	518	1.3		3.9	422	1.6	293.018	GFL06-3M □□□071C13	124
	3.1	528	1.2		3.8	431	1.4	299.200	GFL06-3M □□□071C13	124
	2.8	579	2.2		3.5	472	2.7	327.556	GFL07-3M □□□071C13	124
	2.6	623	2.2		3.2	508	2.7	352.811	GFL07-3M □□□071C13	124
	2.5	649	1.0		3.1	529	1.2	367.200	GFL06-3M □□□071C13	124
	2.3	702	1.8		2.8	573	2.2	397.533	GFL07-3M □□□071C13	124
	2.3	731	0.8		2.7	596	1.0	413.667	GFL06-3M □□□071C13	124
	2.2	760	1.7		2.6	620	2.0	430.222	GFL07-3M □□□071C13	124
	1.8	909	3.0		2.2	742	3.7	514.881	GFL09-3M □□□071C13	124
	1.8	922	1.4		2.2	752	1.7	522.133	GFL07-3M □□□071C13	124
	1.7	979	2.2		2.0	799	2.6	554.470	GFL09-3M □□□071C13	124
	1.7	993	1.1		2.0	810	1.4	562.391	GFL07-3M □□□071C13	124
	1.5	1104	2.1		1.8	900	2.5	624.879	GFL09-3M □□□071C13	124
	1.5	1119	1.1		1.8	913	1.3	633.680	GFL07-3M □□□071C13	124
	1.3	1238	1.7		1.6	1010	2.1	700.875	GFL09-3M □□□071C13	124
	1.3	1270	0.9		1.6	1036	1.1	718.786	GFL07-3M □□□071C13	124
	1.2	1395	1.6		1.4	1138	2.0	789.875	GFL09-3M □□□071C13	124
	1.2	1431	0.9		1.4	1167	1.0	809.900	GFL07-3M □□□071C13	124

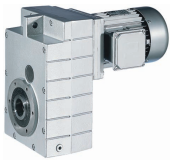

Selection tables

50 Hz, 60 Hz: P_N = 0.25 kW

n_N	2710 r/min				3390 r/min			i		
f_N	50 Hz				60 Hz					
	n_2 [r/min]	M_2 [Nm]	c		n_2 [r/min]	M_2 [Nm]	c			
	386	6.0	4.0		471	4.8	4.7	7.025	GFL04-2M □□□063C31	108
	169	14	4.0		206	11	4.7	16.087	GFL04-2M □□□063C31	108
	151	15	4.0		185	12	4.7	17.920	GFL04-2M □□□063C31	108
	132	18	3.8		161	14	4.4	20.519	GFL04-2M □□□063C31	108
	119	20	3.8		145	16	4.4	22.857	GFL04-2M □□□063C31	108
	86	27	4.7		105	22	5.4	31.600	GFL04-2M □□□063C31	108
	77	30	4.7		94	24	5.4	35.200	GFL04-2M □□□063C31	108
	67	35	3.9		81	28	4.5	40.697	GFL04-2M □□□063C31	108
	60	39	3.9		73	31	4.5	45.333	GFL04-2M □□□063C31	108
	53	44	3.4		64	35	4.0	51.579	GFL04-2M □□□063C31	108
	47	49	3.3		58	39	3.8	57.455	GFL04-2M □□□063C31	108
	42	55	2.8		51	44	3.2	64.636	GFL04-2M □□□063C31	108
	38	62	2.9		46	49	3.5	72.000	GFL04-2M □□□063C31	108
	32	73	1.4		39	58	1.7	85.156	GFL04-2M □□□063C31	108
	29	81	1.4		35	65	1.7	94.857	GFL04-2M □□□063C31	108
	27	85	3.8		33	68	4.6	101.547	GFL05-3M □□□063C31	124
	24	97	3.4		29	77	4.1	114.952	GFL05-3M □□□063C31	124
	21	109	3.0		26	87	3.6	129.524	GFL05-3M □□□063C31	124
	19	122	4.6		23	97	5.5	144.320	GFL06-3M □□□063C31	124
	17	137	4.5		20	109	5.4	162.583	GFL06-3M □□□063C31	124
	15	149	2.3		19	119	2.8	177.027	GFL05-3M □□□063C31	124
	14	168	2.0		17	134	2.3	199.467	GFL05-3M □□□063C31	124
	12	192	1.8		15	153	2.2	227.989	GFL05-3M □□□063C31	124
	11	216	1.5		13	173	1.8	256.889	GFL05-3M □□□063C31	124
	10	219	2.8		13	175	3.4	260.457	GFL06-3M □□□063C31	124
	9.4	243	1.4		12	194	1.7	288.948	GFL05-3M □□□063C31	124
	9.3	247	2.7		11	197	3.2	293.018	GFL06-3M □□□063C31	124
	9.1	252	2.4		11	201	2.9	299.200	GFL06-3M □□□063C31	124
	8.3	274	1.2		10	219	1.4	325.576	GFL05-3M □□□063C31	124
	7.5	305	1.1		9.1	244	1.4	362.100	GFL05-3M □□□063C31	124
	7.4	309	2.1		9.0	247	2.6	367.200	GFL06-3M □□□063C31	124
	6.6	343	1.0		8.1	275	1.1	408.000	GFL05-3M □□□063C31	124
	6.6	348	1.8		8.0	278	2.1	413.667	GFL06-3M □□□063C31	124
	5.7	400	1.6		7.0	320	2.0	475.200	GFL06-3M □□□063C31	124
	5.7	402	0.9		6.9	321	1.0	477.052	GFL05-3M □□□063C31	124
	5.1	451	1.4		6.2	360	1.6	535.333	GFL06-3M □□□063C31	124
	4.7	486	1.3		5.7	388	1.5	576.720	GFL06-3M □□□063C31	124
	4.2	547	1.1		5.1	437	1.4	649.700	GFL06-3M □□□063C31	124
	3.6	640	0.8		4.5	511	1.0	759.806	GFL06-3M □□□063C31	124

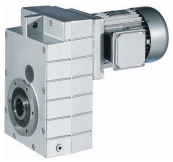

Selection tables

50 Hz, 60 Hz: P_N = 0.25 kW

n_N	1370 r/min				1680 r/min			i		
f_N	50 Hz				60 Hz					
	n_2 [r/min]	M_2 [Nm]	c		n_2 [r/min]	M_2 [Nm]	c			
	374	6.2	4.5		456	5.0	5.4	3.659	GFL04-2M □□□063C42	108
	273	8.5	4.5		333	6.9	5.4	5.018	GFL04-2M □□□063C42	108
	235	9.9	4.5		286	8.0	5.4	5.833	GFL04-2M □□□063C42	108
	214	11	4.5		261	8.8	5.4	6.400	GFL05-2M □□□063C42	108
	195	12	5.2		238	9.7	6.1	7.025	GFL04-2M □□□063C42	108
	164	14	4.5		199	12	5.4	8.379	GFL04-2M □□□063C42	108
	147	16	4.5		179	13	5.4	9.333	GFL04-2M □□□063C42	108
	134	17	5.2		163	14	6.2	10.238	GFL04-2M □□□063C42	108
	119	19	4.5		145	16	5.4	11.491	GFL04-2M □□□063C42	108
	107	22	4.5		131	18	5.4	12.800	GFL04-2M □□□063C42	108
	93	25	5.2		114	20	6.2	14.706	GFL04-2M □□□063C42	108
	86	27	4.5		105	22	5.4	15.904	GFL05-2M □□□063C42	108
	77	30	4.5		93	25	5.4	17.920	GFL05-2M □□□063C42	108
	67	35	4.8		81	28	5.7	20.519	GFL04-2M □□□063C42	108
	60	39	4.3		73	32	5.1	22.857	GFL04-2M □□□063C42	108
	55	42	4.3		66	35	5.3	25.136	GFL04-2M □□□063C42	108
	49	47	3.5		60	39	4.4	28.000	GFL04-2M □□□063C42	108
	43	53	3.5		53	44	4.2	31.600	GFL04-2M □□□063C42	108
	39	60	2.9		47	49	3.5	35.200	GFL04-2M □□□063C42	108
	34	69	2.7		41	56	3.3	40.697	GFL04-2M □□□063C42	108
	30	77	2.2		37	63	2.8	45.333	GFL04-2M □□□063C42	108
	27	87	2.2		32	71	2.7	51.579	GFL04-2M □□□063C42	108
	24	97	1.8		29	79	2.2	57.455	GFL04-2M □□□063C42	108
	23	99	3.2		29	81	4.0	58.667	GFL05-2M □□□063C42	108
	22	103	2.0		27	84	2.5	61.653	GFL05-3M □□□063C42	124
	22	107	2.6		26	87	3.2	63.190	GFL05-2M □□□063C42	108
	21	108	3.2		26	88	3.9	64.080	GFL06-2M □□□063C42	108
	21	109	1.2		26	89	1.5	64.636	GFL04-2M □□□063C42	108
	19	120	2.5		24	98	3.1	71.200	GFL05-2M □□□063C42	108
	19	122	1.2		23	99	1.5	72.000	GFL04-2M □□□063C42	108
	19	122	3.2		23	100	3.9	72.189	GFL06-2M □□□063C42	108
	17	131	1.7		21	107	2.1	78.639	GFL05-3M □□□063C42	124
	17	137	1.4		21	111	1.7	80.763	GFL05-2M □□□063C42	108
	17	137	2.6		21	112	3.2	81.000	GFL06-2M □□□063C42	108
	15	150	2.0		19	122	2.5	90.123	GFL05-3M □□□063C42	124
	15	154	1.4		18	125	1.7	91.000	GFL05-2M □□□063C42	108
	15	154	2.6		18	126	3.2	91.250	GFL06-2M □□□063C42	108
	14	169	1.9		16	138	2.4	101.547	GFL05-3M □□□063C42	124
	12	191	1.7		15	156	2.1	114.952	GFL05-3M □□□063C42	124
	12	194	2.7		14	158	3.3	116.571	GFL06-3M □□□063C42	124

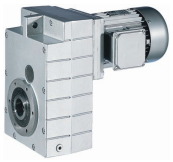

Selection tables

50 Hz, 60 Hz: P_N = 0.25 kW

n_N	1370 r/min				1680 r/min			i		
f_N	50 Hz				60 Hz					
	n_2 [r/min]	M_2 [Nm]	c		n_2 [r/min]	M_2 [Nm]	c			
	11	216	1.5		13	176	1.9	129.524	GFL05-3M □□□063C42	124
	10	219	2.7		13	178	3.3	131.323	GFL06-3M □□□063C42	124
	9.7	235	1.5		12	191	1.8	140.817	GFL05-3M □□□063C42	124
	9.5	240	2.3		12	196	2.9	144.320	GFL06-3M □□□063C42	124
	8.6	264	1.2		11	215	1.5	158.667	GFL05-3M □□□063C42	124
	8.4	271	2.3		10	221	2.8	162.583	GFL06-3M □□□063C42	124
	7.7	295	1.2		9.4	240	1.4	177.027	GFL05-3M □□□063C42	124
	7.6	299	2.0		9.3	244	2.5	179.520	GFL06-3M □□□063C42	124
	6.9	332	1.0		8.4	271	1.2	199.467	GFL05-3M □□□063C42	124
	6.8	337	1.8		8.3	275	2.2	202.237	GFL06-3M □□□063C42	124
	6.0	380	0.9		7.3	310	1.1	227.989	GFL05-3M □□□063C42	124
	5.9	385	1.6		7.2	314	2.0	231.200	GFL06-3M □□□063C42	124
	5.4	422	3.0		6.6	344	3.7	253.111	GFL07-3M □□□063C42	124
					6.5	349	0.9	256.889	GFL05-3M □□□063C42	124
	5.3	434	1.4		6.4	354	1.7	260.457	GFL06-3M □□□063C42	124
					5.8	392	0.9	288.948	GFL05-3M □□□063C42	124
	4.7	484	2.8		5.7	395	3.5	290.706	GFL07-3M □□□063C42	124
	4.7	488	1.3		5.7	398	1.7	293.018	GFL06-3M □□□063C42	124
	4.6	498	1.2		5.6	406	1.5	299.200	GFL06-3M □□□063C42	124
	4.2	545	2.3		5.1	445	2.8	327.556	GFL07-3M □□□063C42	124
	3.9	588	2.3		4.7	479	2.9	352.811	GFL07-3M □□□063C42	124
	3.9	588	3.2		4.7	479	3.9	353.033	GFL09-3M □□□063C42	124
	3.7	612	1.1		4.6	499	1.3	367.200	GFL06-3M □□□063C42	124
	3.5	662	1.9		4.2	540	2.3	397.533	GFL07-3M □□□063C42	124
	3.4	663	3.2		4.2	540	3.9	397.863	GFL09-3M □□□063C42	124
	3.3	689	0.9		4.0	562	1.1	413.667	GFL06-3M □□□063C42	124
	3.2	716	1.8		3.9	584	2.2	430.222	GFL07-3M □□□063C42	124
	2.9	791	0.8		3.5	645	1.0	475.200	GFL06-3M □□□063C42	124
	2.7	857	3.2		3.2	699	3.9	514.881	GFL09-3M □□□063C42	124
	2.6	870	1.5		3.2	709	1.8	522.133	GFL07-3M □□□063C42	124
					3.1	727	0.8	535.333	GFL06-3M □□□063C42	124
	2.5	923	2.3		3.0	753	2.8	554.470	GFL09-3M □□□063C42	124
	2.4	937	1.2		3.0	764	1.5	562.391	GFL07-3M □□□063C42	124
	2.2	1041	2.2		2.7	849	2.7	624.879	GFL09-3M □□□063C42	124
	2.2	1055	1.2		2.6	861	1.4	633.680	GFL07-3M □□□063C42	124
	2.0	1167	1.8		2.4	952	2.2	700.875	GFL09-3M □□□063C42	124
	1.9	1197	0.9		2.3	976	1.2	718.786	GFL07-3M □□□063C42	124
	1.7	1315	1.7		2.1	1073	2.1	789.875	GFL09-3M □□□063C42	124
	1.7	1349	0.9		2.1	1100	1.1	809.900	GFL07-3M □□□063C42	124

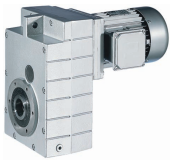

Selection tables

50 Hz, 60 Hz: P_N = 0.25 kW

n_N	930 r/min				1140 r/min			i		
f_N	50 Hz				60 Hz					
	n_2 [r/min]	M_2 [Nm]	c		n_2 [r/min]	M_2 [Nm]	c			
	254	9.1	3.9		309	7.4	4.7	3.659	GFL04-2M □□□071C33	108
	185	12	3.9		225	10	4.7	5.018	GFL04-2M □□□071C33	108
	159	15	3.9		194	12	4.7	5.833	GFL04-2M □□□071C33	108
	145	16	3.9					6.400	GFL05-2M □□□071C33	108
					178	13	5.4	6.422	GFL04-2M □□□071C33	108
	132	17	4.4		161	14	5.4	7.025	GFL04-2M □□□071C33	108
	111	21	3.9		135	17	4.7	8.379	GFL04-2M □□□071C33	108
	100	23	3.9		121	19	4.7	9.333	GFL04-2M □□□071C33	108
	91	25	4.4		110	21	5.4	10.238	GFL04-2M □□□071C33	108
	81	29	3.9		98	23	4.7	11.491	GFL04-2M □□□071C33	108
	73	32	3.9		88	26	4.7	12.800	GFL04-2M □□□071C33	108
	63	37	4.4		77	30	5.4	14.706	GFL04-2M □□□071C33	108
	59	40	3.9					15.904	GFL05-2M □□□071C33	108
					71	33	5.4	16.087	GFL04-2M □□□071C33	108
	52	45	3.7		63	36	4.6	17.920	GFL04-2M □□□071C33	108
	45	51	3.6		55	42	4.4	20.519	GFL04-2M □□□071C33	108
	41	57	2.9		49	46	3.6	22.857	GFL04-2M □□□071C33	108
	37	63	2.9		45	51	3.6	25.136	GFL04-2M □□□071C33	108
	33	70	2.4		40	57	3.0	28.000	GFL04-2M □□□071C33	108
	29	79	2.4		36	64	2.9	31.600	GFL04-2M □□□071C33	108
	26	88	1.9		32	72	2.4	35.200	GFL04-2M □□□071C33	108
	23	100	3.1		28	82	3.8	40.233	GFL05-2M □□□071C33	108
	23	101	1.8		28	83	2.3	40.697	GFL04-2M □□□071C33	108
	21	113	1.5		25	92	1.9	45.333	GFL04-2M □□□071C33	108
	21	113	2.8		25	92	3.5	45.333	GFL05-2M □□□071C33	108
	18	128	1.5		22	105	1.8	51.579	GFL04-2M □□□071C33	108
	18	130	2.4		22	106	2.9	52.067	GFL05-2M □□□071C33	108
	18	132	3.1		21	107	3.8	52.800	GFL06-2M □□□071C33	108
	16	143	1.2		20	117	1.5	57.455	GFL04-2M □□□071C33	108
	16	146	2.2		19	119	2.7	58.667	GFL05-2M □□□071C33	108
	16	148	3.1		19	121	3.8	59.481	GFL06-2M □□□071C33	108
	15	151	1.4		18	123	1.7	61.653	GFL05-3M □□□071C33	124
	15	157	1.8		18	128	2.2	63.190	GFL05-2M □□□071C33	108
	15	160	2.7		18	130	3.3	64.080	GFL06-2M □□□071C33	108
	14	161	1.0		18	131	1.2	64.636	GFL04-2M □□□071C33	108
	14	162	3.1		17	133	3.7	66.213	GFL06-3M □□□071C33	124
	13	177	1.7		16	145	2.1	71.200	GFL05-2M □□□071C33	108
	13	179	1.0		16	146	1.2	72.000	GFL04-2M □□□071C33	108
	13	177	2.8		16	144	3.4	72.000	GFL06-3M □□□071C33	124
	13	180	2.7		16	147	3.3	72.189	GFL06-2M □□□071C33	108

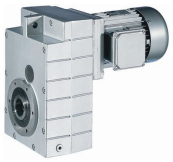

Selection tables

50 Hz, 60 Hz: P_N = 0.25 kW

n_N	930 r/min				1140 r/min			i		
f_N	50 Hz				60 Hz					
	n_2 [r/min]	M_2 [Nm]	c		n_2 [r/min]	M_2 [Nm]	c			
	12	193	1.2		14	157	1.4	78.639	GFL05-3M □□□071C33	124
	12	201	1.1		14	164	1.3	80.763	GFL05-2M □□□071C33	108
	12	202	2.2		14	165	2.6	81.000	GFL06-2M □□□071C33	108
	12	199	2.5		14	162	3.1	81.111	GFL06-3M □□□071C33	124
	11	216	2.3		13	177	2.8	88.200	GFL06-3M □□□071C33	124
	10	221	1.4		13	180	1.7	90.123	GFL05-3M □□□071C33	124
	10	227	1.0		12	185	1.3	91.000	GFL05-2M □□□071C33	108
	10	227	2.1		12	185	2.6	91.250	GFL06-2M □□□071C33	108
	9.4	244	2.3		11	199	2.8	99.361	GFL06-3M □□□071C33	124
	9.2	249	1.3		11	203	1.6	101.547	GFL05-3M □□□071C33	124
	8.1	282	1.2		9.8	230	1.4	114.952	GFL05-3M □□□071C33	124
	8.0	286	1.8		9.7	233	2.3	116.571	GFL06-3M □□□071C33	124
	7.2	318	1.0		8.7	259	1.3	129.524	GFL05-3M □□□071C33	124
	7.1	322	1.8		8.6	263	2.3	131.323	GFL06-3M □□□071C33	124
	6.6	345	1.0		8.0	282	1.2	140.817	GFL05-3M □□□071C33	124
	6.4	354	1.6		7.8	289	1.9	144.320	GFL06-3M □□□071C33	124
	6.3	361	3.2		7.7	295	3.9	147.347	GFL07-3M □□□071C33	124
	5.9	389	0.8		7.1	318	1.0	158.667	GFL05-3M □□□071C33	124
	5.7	399	1.5		7.0	325	1.9	162.583	GFL06-3M □□□071C33	124
	5.6	407	3.1		6.8	332	3.8	166.025	GFL07-3M □□□071C33	124
	5.2	440	1.4		6.3	359	1.7	179.520	GFL06-3M □□□071C33	124
	5.1	450	2.7		6.2	367	3.4	183.285	GFL07-3M □□□071C33	124
	4.6	496	1.2		5.6	405	1.5	202.237	GFL06-3M □□□071C33	124
	4.5	507	2.5		5.5	413	3.0	206.519	GFL07-3M □□□071C33	124
	4.1	551	2.4		5.0	450	3.0	224.636	GFL07-3M □□□071C33	124
	4.0	567	1.1		4.9	463	1.4	231.200	GFL06-3M □□□071C33	124
	3.7	621	2.0		4.5	507	2.5	253.111	GFL07-3M □□□071C33	124
	3.6	639	1.0		4.3	521	1.2	260.457	GFL06-3M □□□071C33	124
	3.2	713	1.9		3.9	582	2.4	290.706	GFL07-3M □□□071C33	124
	3.2	714	3.1		3.9	582	3.8	290.889	GFL09-3M □□□071C33	124
	3.2	719	0.9		3.9	586	1.1	293.018	GFL06-3M □□□071C33	124
	3.1	734	0.8		3.8	599	1.0	299.200	GFL06-3M □□□071C33	124
	2.8	804	1.6		3.5	656	1.9	327.556	GFL07-3M □□□071C33	124
	2.8	804	3.1		3.5	656	3.8	327.827	GFL09-3M □□□071C33	124
	2.6	866	1.6		3.2	706	2.0	352.811	GFL07-3M □□□071C33	124
	2.6	866	2.7		3.2	707	3.3	353.033	GFL09-3M □□□071C33	124
	2.3	975	1.3		2.8	796	1.6	397.533	GFL07-3M □□□071C33	124
	2.3	976	2.7		2.8	796	3.3	397.863	GFL09-3M □□□071C33	124
	2.2	1041	2.6		2.7	849	3.2	424.247	GFL09-3M □□□071C33	124
	2.2	1055	1.2		2.6	861	1.5	430.222	GFL07-3M □□□071C33	124

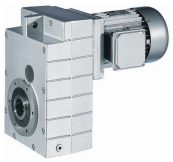

Selection tables

50 Hz, 60 Hz: P_N = 0.25 kW

n_N	930 r/min				1140 r/min			i		
f_N	50 Hz				60 Hz					
	n_2 [r/min]	M_2 [Nm]	c		n_2 [r/min]	M_2 [Nm]	c			
	1.8	1263	2.2		2.2	1030	2.6	514.881	GFL09-3M □□□071C33	124
	1.8	1281	1.0		2.2	1045	1.2	522.133	GFL07-3M □□□071C33	124
	1.7	1360	1.6		2.0	1110	1.9	554.470	GFL09-3M □□□071C33	124
	1.7	1380	0.8		2.0	1126	1.0	562.391	GFL07-3M □□□071C33	124
	1.5	1533	1.5		1.8	1251	1.8	624.879	GFL09-3M □□□071C33	124
	1.3	1719	1.2		1.6	1403	1.5	700.875	GFL09-3M □□□071C33	124
	1.2	1938	1.2		1.4	1581	1.4	789.875	GFL09-3M □□□071C33	124

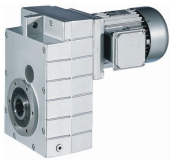

Selection tables

50 Hz, 60 Hz: P_N = 0.37 kW

n_N	2720 r/min				3360 r/min			i		
f_N	50 Hz				60 Hz					
	n_2 [r/min]	M_2 [Nm]	c		n_2 [r/min]	M_2 [Nm]	c			
	133	26	5.8		162	21	6.7	20.519	GFL04-2M □□□071C11	108
	119	29	4.8		145	23	5.5	22.857	GFL04-2M □□□071C11	108
	108	32	5.4		132	26	6.2	25.136	GFL04-2M □□□071C11	108
	97	35	4.4		119	29	5.1	28.000	GFL04-2M □□□071C11	108
	86	40	4.3		105	32	5.0	31.600	GFL04-2M □□□071C11	108
	77	44	3.6		94	36	4.1	35.200	GFL04-2M □□□071C11	108
	67	51	3.4		82	42	3.9	40.697	GFL04-2M □□□071C11	108
	60	57	2.8		73	46	3.2	45.333	GFL04-2M □□□071C11	108
	53	65	2.7		64	53	3.1	51.579	GFL04-2M □□□071C11	108
	47	72	2.2		58	59	2.6	57.455	GFL04-2M □□□071C11	108
	44	77	2.5		54	62	2.9	61.653	GFL05-3M □□□071C11	124
	42	81	1.9		51	66	2.2	64.636	GFL04-2M □□□071C11	108
	38	91	2.0		46	73	2.3	72.000	GFL04-2M □□□071C11	108
	35	98	2.3		42	79	2.7	78.639	GFL05-3M □□□071C11	124
	34	102	2.1		42	82	2.5	80.763	GFL05-2M □□□071C11	108
	30	112	2.7		37	91	3.2	90.123	GFL05-3M □□□071C11	124
	30	115	2.1		37	93	2.5	91.000	GFL05-2M □□□071C11	108
	27	126	2.6		33	102	3.1	101.547	GFL05-3M □□□071C11	124
	24	143	2.3		29	116	2.7	114.952	GFL05-3M □□□071C11	124
	21	161	2.0		26	130	2.4	129.524	GFL05-3M □□□071C11	124
	19	175	2.0		24	142	2.3	140.817	GFL05-3M □□□071C11	124
	19	179	3.1		23	145	3.7	144.320	GFL06-3M □□□071C11	124
	17	197	1.7		21	159	2.0	158.667	GFL05-3M □□□071C11	124
	17	202	3.0		20	163	3.6	162.583	GFL06-3M □□□071C11	124
	15	220	1.6		19	178	1.9	177.027	GFL05-3M □□□071C11	124
	15	223	2.7		19	180	3.2	179.520	GFL06-3M □□□071C11	124
	14	248	1.3		17	200	1.6	199.467	GFL05-3M □□□071C11	124
	13	251	2.4		16	203	2.9	202.237	GFL06-3M □□□071C11	124
	12	283	1.2		15	229	1.4	227.989	GFL05-3M □□□071C11	124
	12	287	2.2		14	232	2.6	231.200	GFL06-3M □□□071C11	124
	11	319	1.0		13	258	1.2	256.889	GFL05-3M □□□071C11	124
	10	323	1.9		13	262	2.3	260.457	GFL06-3M □□□071C11	124
	9.4	359	1.0		12	290	1.1	288.948	GFL05-3M □□□071C11	124
	9.3	364	1.8		11	294	2.1	293.018	GFL06-3M □□□071C11	124
	9.1	371	1.6		11	301	2.0	299.200	GFL06-3M □□□071C11	124
	8.4	404	0.8		10	327	1.0	325.576	GFL05-3M □□□071C11	124
	8.3	407	3.1		10	329	3.7	327.556	GFL07-3M □□□071C11	124
	7.7	438	3.1		9.4	355	3.7	352.811	GFL07-3M □□□071C11	124
	7.4	456	1.4		9.0	369	1.7	367.200	GFL06-3M □□□071C11	124
	6.8	493	2.5		8.4	399	3.0	397.533	GFL07-3M □□□071C11	124

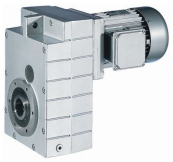

Selection tables

50 Hz, 60 Hz: P_N = 0.37 kW

n_N	2720 r/min				3360 r/min			i		
f_N	50 Hz				60 Hz					
	n_2 [r/min]	M_2 [Nm]	c		n_2 [r/min]	M_2 [Nm]	c			
	6.6	514	1.2		8.0	416	1.4	413.667	GFL06-3M □□□071C11	124
	6.3	534	2.4		7.7	432	2.8	430.222	GFL07-3M □□□071C11	124
	5.7	590	1.1		7.0	478	1.3	475.200	GFL06-3M □□□071C11	124
	5.2	648	2.0		6.4	525	2.3	522.133	GFL07-3M □□□071C11	124
	5.1	665	0.9		6.2	538	1.1	535.333	GFL06-3M □□□071C11	124
	4.9	688	3.1		6.0	557	3.7	554.470	GFL09-3M □□□071C11	124
	4.8	698	1.6		5.9	565	1.9	562.391	GFL07-3M □□□071C11	124
	4.7	716	0.9		5.8	580	1.0	576.720	GFL06-3M □□□071C11	124
	4.4	776	2.9		5.3	628	3.5	624.879	GFL09-3M □□□071C11	124
	4.3	787	1.6		5.2	637	1.8	633.680	GFL07-3M □□□071C11	124
	3.9	870	2.4		4.7	704	2.9	700.875	GFL09-3M □□□071C11	124
	3.8	892	1.3		4.6	722	1.5	718.786	GFL07-3M □□□071C11	124
	3.4	981	2.3		4.2	794	2.8	789.875	GFL09-3M □□□071C11	124
	3.4	1005	1.2		4.1	814	1.4	809.900	GFL07-3M □□□071C11	124

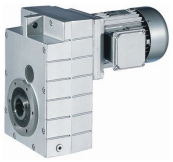

Selection tables

50 Hz, 60 Hz: P_N = 0.37 kW

n_N	1410 r/min				1720 r/min			i		
f_N	50 Hz				60 Hz					
	n_2 [r/min]	M_2 [Nm]	c		n_2 [r/min]	M_2 [Nm]	c			
	385	8.9	4.0		467	7.3	4.6	3.659	GFL04-2M □□□071C32	108
	281	12	4.0		341	10	4.6	5.018	GFL04-2M □□□071C32	108
	242	14	4.0		293	12	4.6	5.833	GFL04-2M □□□071C32	108
	220	16	4.0		267	13	4.6	6.400	GFL05-2M □□□071C32	108
					268	13	5.3	6.422	GFL04-2M □□□071C32	108
	201	17	4.5		243	14	5.3	7.025	GFL04-2M □□□071C32	108
	168	20	4.0		204	17	4.6	8.379	GFL04-2M □□□071C32	108
	151	23	4.0		183	19	4.6	9.333	GFL04-2M □□□071C32	108
	138	25	4.5		167	20	5.3	10.238	GFL04-2M □□□071C32	108
	123	28	4.0		149	23	4.6	11.491	GFL04-2M □□□071C32	108
	110	31	4.0		134	26	4.6	12.800	GFL04-2M □□□071C32	108
	96	36	4.5		116	29	5.3	14.706	GFL04-2M □□□071C32	108
	89	39	4.0		108	32	4.6	15.904	GFL05-2M □□□071C32	108
					107	32	5.3	16.087	GFL04-2M □□□071C32	108
	79	44	3.8		95	36	4.5	17.920	GFL04-2M □□□071C32	108
	69	50	3.7		83	41	4.3	20.519	GFL04-2M □□□071C32	108
	62	56	3.0		75	46	3.5	22.857	GFL04-2M □□□071C32	108
	56	61	3.0		68	50	3.7	25.136	GFL04-2M □□□071C32	108
	50	68	2.5		61	56	3.0	28.000	GFL04-2M □□□071C32	108
	45	77	2.4		54	63	2.9	31.600	GFL04-2M □□□071C32	108
	40	86	2.0		49	70	2.4	35.200	GFL04-2M □□□071C32	108
	35	98	3.2		43	80	3.9	40.233	GFL05-2M □□□071C32	108
	35	99	1.9		42	81	2.3	40.697	GFL04-2M □□□071C32	108
	31	110	1.6		38	90	1.9	45.333	GFL04-2M □□□071C32	108
	31	110	2.9		38	90	3.5	45.333	GFL05-2M □□□071C32	108
	27	125	1.5		33	103	1.8	51.579	GFL04-2M □□□071C32	108
	27	127	2.4		33	104	3.0	52.067	GFL05-2M □□□071C32	108
	27	128	3.2		32	105	3.9	52.800	GFL06-2M □□□071C32	108
	25	140	1.2		30	115	1.5	57.455	GFL04-2M □□□071C32	108
	24	143	2.3		29	117	2.8	58.667	GFL05-2M □□□071C32	108
	24	145	3.2		29	119	3.9	59.481	GFL06-2M □□□071C32	108
	23	148	1.4		28	121	1.7	61.653	GFL05-3M □□□071C32	124
	22	154	1.8		27	126	2.2	63.190	GFL05-2M □□□071C32	108
	22	156	2.8		27	128	3.4	64.080	GFL06-2M □□□071C32	108
	22	157	1.0		27	129	1.3	64.636	GFL04-2M □□□071C32	108
	21	159	3.1		26	130	3.8	66.213	GFL06-3M □□□071C32	124
	20	173	1.8		24	142	2.2	71.200	GFL05-2M □□□071C32	108
	20	175	1.0		24	143	1.2	72.000	GFL04-2M □□□071C32	108
	20	172	2.9		24	141	3.5	72.000	GFL06-3M □□□071C32	124
	20	176	2.8		24	144	3.4	72.189	GFL06-2M □□□071C32	108

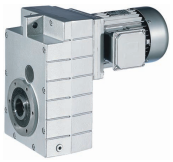

Selection tables

50 Hz, 60 Hz: P_N = 0.37 kW

n_N	1410 r/min				1720 r/min			i		
f_N	50 Hz				60 Hz					
	n_2 [r/min]	M_2 [Nm]	c		n_2 [r/min]	M_2 [Nm]	c			
	18	188	1.2		22	154	1.5	78.639	GFL05-3M □□□071C32	124
	17	196	1.1		21	161	1.4	80.763	GFL05-2M □□□071C32	108
	17	197	2.2		21	161	2.7	81.000	GFL06-2M □□□071C32	108
	17	194	2.6		21	159	3.1	81.111	GFL06-3M □□□071C32	124
	16	211	2.3		19	173	2.8	88.200	GFL06-3M □□□071C32	124
	16	216	1.4		19	177	1.7	90.123	GFL05-3M □□□071C32	124
	16	221	1.1		19	181	1.3	91.000	GFL05-2M □□□071C32	108
	16	222	2.1		19	182	2.6	91.250	GFL06-2M □□□071C32	108
	14	238	2.3		17	195	2.8	99.361	GFL06-3M □□□071C32	124
	14	243	1.3		17	199	1.6	101.547	GFL05-3M □□□071C32	124
	12	275	1.2		15	226	1.5	114.952	GFL05-3M □□□071C32	124
	12	279	1.9		15	229	2.3	116.571	GFL06-3M □□□071C32	124
	11	310	1.1		13	254	1.3	129.524	GFL05-3M □□□071C32	124
	11	314	1.9		13	258	2.3	131.323	GFL06-3M □□□071C32	124
	10	337	1.0		12	276	1.2	140.817	GFL05-3M □□□071C32	124
	9.8	346	1.6		12	283	2.0	144.320	GFL06-3M □□□071C32	124
	9.6	353	3.2		12	289	3.9	147.347	GFL07-3M □□□071C32	124
	8.9	380	0.9		11	311	1.1	158.667	GFL05-3M □□□071C32	124
	8.7	389	1.6		11	319	1.9	162.583	GFL06-3M □□□071C32	124
	8.5	398	3.1		10	326	3.8	166.025	GFL07-3M □□□071C32	124
	8.0	424	0.8		9.7	348	1.0	177.027	GFL05-3M □□□071C32	124
	7.9	430	1.4		9.5	352	1.7	179.520	GFL06-3M □□□071C32	124
	7.7	439	2.8		9.3	360	3.4	183.285	GFL07-3M □□□071C32	124
	7.0	484	1.3		8.5	397	1.5	202.237	GFL06-3M □□□071C32	124
	6.8	495	2.5		8.3	405	3.1	206.519	GFL07-3M □□□071C32	124
	6.3	538	2.5		7.6	441	3.0	224.636	GFL07-3M □□□071C32	124
	6.1	554	1.1		7.4	454	1.4	231.200	GFL06-3M □□□071C32	124
	5.6	606	2.1		6.8	497	2.5	253.111	GFL07-3M □□□071C32	124
	5.4	624	1.0		6.6	511	1.2	260.457	GFL06-3M □□□071C32	124
	4.9	696	2.0		5.9	571	2.4	290.706	GFL07-3M □□□071C32	124
	4.9	697	3.2		5.9	571	3.9	290.889	GFL09-3M □□□071C32	124
	4.8	702	0.9		5.8	575	1.1	293.018	GFL06-3M □□□071C32	124
	4.7	717	0.9		5.7	587	1.0	299.200	GFL06-3M □□□071C32	124
	4.3	784	1.6		5.2	643	2.0	327.556	GFL07-3M □□□071C32	124
	4.3	785	3.2		5.2	644	3.9	327.827	GFL09-3M □□□071C32	124
	4.0	845	1.6		4.9	693	2.0	352.811	GFL07-3M □□□071C32	124
	4.0	845	2.8		4.8	693	3.4	353.033	GFL09-3M □□□071C32	124
	3.6	952	1.3		4.3	780	1.6	397.533	GFL07-3M □□□071C32	124
	3.5	953	2.8		4.3	781	3.4	397.863	GFL09-3M □□□071C32	124
	3.3	1016	2.7		4.0	833	3.3	424.247	GFL09-3M □□□071C32	124

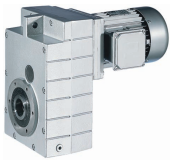

Selection tables

50 Hz, 60 Hz: P_N = 0.37 kW

n_N	1410 r/min				1720 r/min			i		
f_N	50 Hz				60 Hz					
	n_2 [r/min]	M_2 [Nm]	c		n_2 [r/min]	M_2 [Nm]	c			
	3.3	1030	1.2		4.0	845	1.5	430.222	GFL07-3M □□□071C32	124
	2.7	1233	2.2		3.3	1011	2.7	514.881	GFL09-3M □□□071C32	124
	2.7	1250	1.0		3.3	1025	1.2	522.133	GFL07-3M □□□071C32	124
	2.5	1328	1.6		3.1	1089	1.9	554.470	GFL09-3M □□□071C32	124
	2.5	1347	0.8		3.0	1104	1.0	562.391	GFL07-3M □□□071C32	124
	2.3	1496	1.5		2.7	1227	1.9	624.879	GFL09-3M □□□071C32	124
	2.2	1518	0.8		2.7	1244	1.0	633.680	GFL07-3M □□□071C32	124
	2.0	1678	1.3		2.4	1376	1.5	700.875	GFL09-3M □□□071C32	124
	1.8	1892	1.2		2.2	1551	1.5	789.875	GFL09-3M □□□071C32	124

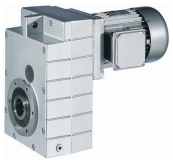

Selection tables

50 Hz, 60 Hz: P_N = 0.37 kW

n_N	950 r/min				1160 r/min			i		
f_N	50 Hz				60 Hz					
	n_2 [r/min]	M_2 [Nm]	c		n_2 [r/min]	M_2 [Nm]	c			
	260	13	5.7		314	11	6.9	3.659	GFL04-2M □□□080C13	108
	189	18	5.7		229	15	6.9	5.018	GFL04-2M □□□080C13	108
	163	21	5.7		197	17	6.9	5.833	GFL04-2M □□□080C13	108
	148	23	4.9		179	19	5.9	6.422	GFL04-2M □□□080C13	108
	135	25	4.5		164	21	5.4	7.025	GFL04-2M □□□080C13	108
	113	30	5.7		137	25	6.9	8.379	GFL04-2M □□□080C13	108
	102	34	4.9		123	28	6.0	9.333	GFL04-2M □□□080C13	108
	93	37	4.3		112	30	5.3	10.238	GFL04-2M □□□080C13	108
	83	41	4.4		100	34	5.3	11.491	GFL04-2M □□□080C13	108
	74	46	3.6		90	38	4.4	12.800	GFL04-2M □□□080C13	108
	65	53	3.4		78	43	4.2	14.706	GFL04-2M □□□080C13	108
	59	58	3.1		72	48	3.8	16.087	GFL04-2M □□□080C13	108
	53	65	2.6		64	53	3.2	17.920	GFL04-2M □□□080C13	108
	46	74	2.5		56	61	3.0	20.519	GFL04-2M □□□080C13	108
	42	82	2.0		50	68	2.5	22.857	GFL04-2M □□□080C13	108
	38	91	2.0		46	74	2.5	25.136	GFL04-2M □□□080C13	108
	34	101	1.7		41	83	2.0	28.000	GFL04-2M □□□080C13	108
	34	101	3.1		41	83	3.8	28.000	GFL05-2M □□□080C13	108
	30	114	1.6		36	93	2.0	31.600	GFL04-2M □□□080C13	108
	29	117	3.0		36	96	3.6	32.344	GFL05-2M □□□080C13	108
	27	127	1.3		33	104	1.6	35.200	GFL04-2M □□□080C13	108
	26	132	2.4		32	108	2.9	36.444	GFL05-2M □□□080C13	108
	24	145	2.4		29	119	2.9	40.233	GFL05-2M □□□080C13	108
	23	147	1.3		28	120	1.6	40.697	GFL04-2M □□□080C13	108
	21	164	1.1		25	134	1.3	45.333	GFL04-2M □□□080C13	108
	21	164	2.0		25	134	2.4	45.333	GFL05-2M □□□080C13	108
	18	188	1.6		22	154	2.0	52.067	GFL05-2M □□□080C13	108
	16	212	1.5		20	173	1.9	58.667	GFL05-2M □□□080C13	108
	16	215	2.9		19	176	3.5	59.481	GFL06-2M □□□080C13	108
	15	219	0.9		19	179	1.2	61.653	GFL05-3M □□□080C13	124
	15	228	1.2		18	187	1.5	63.190	GFL05-2M □□□080C13	108
	15	231	2.5		18	189	3.0	64.080	GFL06-2M □□□080C13	108
	14	235	2.1		17	193	2.6	66.213	GFL06-3M □□□080C13	124
	13	257	1.2		16	210	1.5	71.200	GFL05-2M □□□080C13	108
	13	256	1.9		16	210	2.4	72.000	GFL06-3M □□□080C13	124
	13	260	2.4		16	213	2.9	72.189	GFL06-2M □□□080C13	108
	12	280	0.8		15	229	1.0	78.639	GFL05-3M □□□080C13	124
	12	288	2.8		14	236	3.4	79.875	GFL07-2M □□□080C13	108
	12	292	1.5		14	239	1.8	81.000	GFL06-2M □□□080C13	108
	12	288	1.7		14	236	2.1	81.111	GFL06-3M □□□080C13	124

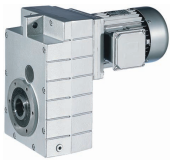

Selection tables

50 Hz, 60 Hz: P_N = 0.37 kW

n_N	950 r/min				1160 r/min			i		
f_N	50 Hz				60 Hz					
	n_2 [r/min]	M_2 [Nm]	c		n_2 [r/min]	M_2 [Nm]	c			
	11	313	1.6		13	257	1.9	88.200	GFL06-3M □□□080C13	124
	11	325	2.8		13	266	3.4	90.000	GFL07-2M □□□080C13	108
	11	320	0.9		13	262	1.2	90.123	GFL05-3M □□□080C13	124
	10	329	1.4		13	270	1.8	91.250	GFL06-2M □□□080C13	108
	10	328	2.9		12	269	3.6	92.413	GFL07-3M □□□080C13	124
	9.6	353	1.6		12	289	1.9	99.361	GFL06-3M □□□080C13	124
	9.4	361	0.9		11	296	1.1	101.547	GFL05-3M □□□080C13	124
	9.1	370	2.9		11	303	3.6	104.127	GFL07-3M □□□080C13	124
	8.4	402	2.6		10	330	3.2	113.206	GFL07-3M □□□080C13	124
	8.3	409	0.8		10	335	1.0	114.952	GFL05-3M □□□080C13	124
	8.2	414	1.3		9.9	339	1.6	116.571	GFL06-3M □□□080C13	124
	7.5	453	2.6		9.0	371	3.2	127.556	GFL07-3M □□□080C13	124
	7.2	467	1.3		8.8	382	1.6	131.323	GFL06-3M □□□080C13	124
	6.6	513	1.1		8.0	420	1.3	144.320	GFL06-3M □□□080C13	124
	6.5	524	2.2		7.8	429	2.7	147.347	GFL07-3M □□□080C13	124
	5.8	578	1.1		7.1	473	1.3	162.583	GFL06-3M □□□080C13	124
	5.7	590	2.1		6.9	483	2.6	166.025	GFL07-3M □□□080C13	124
	5.3	638	0.9		6.4	523	1.2	179.520	GFL06-3M □□□080C13	124
	5.2	651	1.9		6.3	534	2.3	183.285	GFL07-3M □□□080C13	124
	4.7	719	0.8		5.7	589	1.0	202.237	GFL06-3M □□□080C13	124
	4.6	734	1.7		5.6	601	2.1	206.519	GFL07-3M □□□080C13	124
	4.2	798	1.7		5.1	654	2.1	224.636	GFL07-3M □□□080C13	124
	4.2	799	3.0		5.1	654	3.7	224.778	GFL09-3M □□□080C13	124
	3.8	900	1.4		4.5	737	1.7	253.111	GFL07-3M □□□080C13	124
	3.8	900	3.0		4.5	737	3.7	253.321	GFL09-3M □□□080C13	124
	3.3	1033	1.3		4.0	846	1.6	290.706	GFL07-3M □□□080C13	124
	3.3	1034	2.6		4.0	847	3.1	290.889	GFL09-3M □□□080C13	124
	2.9	1164	1.1		3.5	953	1.3	327.556	GFL07-3M □□□080C13	124
	2.9	1165	2.6		3.5	954	3.1	327.827	GFL09-3M □□□080C13	124
	2.7	1254	1.1		3.3	1027	1.3	352.811	GFL07-3M □□□080C13	124
	2.7	1255	2.2		3.3	1028	2.7	353.033	GFL09-3M □□□080C13	124
	2.4	1413	0.9		2.9	1157	1.1	397.533	GFL07-3M □□□080C13	124
	2.4	1414	2.2		2.9	1158	2.7	397.863	GFL09-3M □□□080C13	124
	2.2	1508	1.8		2.7	1235	2.2	424.247	GFL09-3M □□□080C13	124
	2.2	1529	0.8		2.7	1252	1.0	430.222	GFL07-3M □□□080C13	124
	1.9	1830	1.5		2.2	1499	1.8	514.881	GFL09-3M □□□080C13	124
	1.8	1856	3.2		2.2	1520	3.9	522.133	GFL11-3M □□□080C13	124
	1.7	1971	1.1		2.1	1614	1.3	554.470	GFL09-3M □□□080C13	124
	1.7	1999	2.7		2.0	1637	3.2	562.391	GFL11-3M □□□080C13	124
	1.5	2221	1.0		1.8	1819	1.2	624.879	GFL09-3M □□□080C13	124

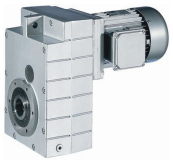

Selection tables

50 Hz, 60 Hz: P_N = 0.37 kW

n_N	950 r/min				1160 r/min			i		
f_N	50 Hz				60 Hz					
	n_2 [r/min]	M_2 [Nm]	c		n_2 [r/min]	M_2 [Nm]	c			
	1.5	2252	2.6		1.8	1845	3.2	633.680	GFL11-3M □□□080C13	124
	1.4	2491	0.8		1.6	2040	1.0	700.875	GFL09-3M □□□080C13	124
	1.3	2527	2.1		1.6	2069	2.6	710.888	GFL11-3M □□□080C13	124
	1.2	2807	0.8		1.5	2299	1.0	789.875	GFL09-3M □□□080C13	124
	1.2	2847	2.1		1.4	2332	2.5	801.000	GFL11-3M □□□080C13	124

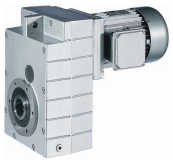

Selection tables

50 Hz, 60 Hz: P_N = 0.55 kW

n_N	2630 r/min				3240 r/min			i		
f_N	50 Hz				60 Hz					
	n_2 [r/min]	M_2 [Nm]	c		n_2 [r/min]	M_2 [Nm]	c			
	719	7.1	4.1		883	5.8	4.7	3.659	GFL04-2M □□□071C31	108
	524	9.7	4.1		644	7.9	4.7	5.018	GFL04-2M □□□071C31	108
	451	11	4.1		554	9.2	4.7	5.833	GFL04-2M □□□071C31	108
	411	12	4.1					6.400	GFL05-2M □□□071C31	108
					505	10	5.4	6.422	GFL04-2M □□□071C31	108
	374	14	4.7		460	11	5.4	7.025	GFL04-2M □□□071C31	108
	314	16	4.1		386	13	4.7	8.379	GFL04-2M □□□071C31	108
	282	18	4.1		346	15	4.7	9.333	GFL04-2M □□□071C31	108
	257	20	4.7		316	16	5.4	10.238	GFL04-2M □□□071C31	108
	229	22	4.1		281	18	4.7	11.491	GFL04-2M □□□071C31	108
	206	25	4.1		252	20	4.7	12.800	GFL04-2M □□□071C31	108
	179	28	4.7		220	23	5.4	14.706	GFL04-2M □□□071C31	108
	165	31	4.1					15.904	GFL05-2M □□□071C31	108
					201	25	5.4	16.087	GFL04-2M □□□071C31	108
	147	35	4.0		180	28	4.6	17.920	GFL04-2M □□□071C31	108
	128	40	3.8		157	32	4.4	20.519	GFL04-2M □□□071C31	108
	115	44	3.1		141	36	3.6	22.857	GFL04-2M □□□071C31	108
	105	49	3.5		129	40	4.1	25.136	GFL04-2M □□□071C31	108
	94	54	2.9		115	44	3.4	28.000	GFL04-2M □□□071C31	108
	83	61	2.8		102	50	3.3	31.600	GFL04-2M □□□071C31	108
	75	68	2.3		92	55	2.7	35.200	GFL04-2M □□□071C31	108
	65	79	2.2		79	64	2.6	40.697	GFL04-2M □□□071C31	108
	58	88	1.8		71	71	2.1	45.333	GFL04-2M □□□071C31	108
	51	100	1.8		63	81	2.1	51.579	GFL04-2M □□□071C31	108
	51	101	2.9		62	82	3.3	52.067	GFL05-2M □□□071C31	108
	46	111	1.5		56	90	1.7	57.455	GFL04-2M □□□071C31	108
	45	114	2.7		55	92	3.1	58.667	GFL05-2M □□□071C31	108
	43	118	1.7		52	96	1.9	61.653	GFL05-3M □□□071C31	124
	42	122	2.2		51	99	2.5	63.190	GFL05-2M □□□071C31	108
	41	125	1.2		50	102	1.4	64.636	GFL04-2M □□□071C31	108
	37	138	2.2		45	112	2.7	71.200	GFL05-2M □□□071C31	108
	37	140	1.3		45	113	1.5	72.000	GFL04-2M □□□071C31	108
	33	150	1.5		41	122	1.8	78.639	GFL05-3M □□□071C31	124
	33	156	1.4		40	127	1.7	80.763	GFL05-2M □□□071C31	108
	33	157	2.8		40	127	3.3	81.000	GFL06-2M □□□071C31	108
	32	155	3.2		40	126	3.9	81.111	GFL06-3M □□□071C31	124
	30	168	2.9		37	137	3.5	88.200	GFL06-3M □□□071C31	124
	29	172	1.8		36	140	2.1	90.123	GFL05-3M □□□071C31	124
	29	176	1.3		36	143	1.6	91.000	GFL05-2M □□□071C31	108
	29	177	2.7		35	144	3.2	91.250	GFL06-2M □□□071C31	108

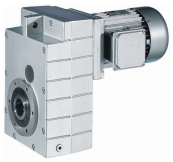

Selection tables

50 Hz, 60 Hz: P_N = 0.55 kW

n_N	2630 r/min				3240 r/min			i		
f_N	50 Hz				60 Hz					
	n_2 [r/min]	M_2 [Nm]	c		n_2 [r/min]	M_2 [Nm]	c			
	27	190	2.9		33	154	3.5	99.361	GFL06-3M □□□071C31	124
	26	194	1.7		32	157	2.0	101.547	GFL05-3M □□□071C31	124
	23	219	1.5		28	178	1.8	114.952	GFL05-3M □□□071C31	124
	23	222	2.4		28	181	2.9	116.571	GFL06-3M □□□071C31	124
	20	247	1.3		25	201	1.6	129.524	GFL05-3M □□□071C31	124
	20	251	2.4		25	203	2.9	131.323	GFL06-3M □□□071C31	124
	19	269	1.3		23	218	1.5	140.817	GFL05-3M □□□071C31	124
	18	275	2.0		22	224	2.4	144.320	GFL06-3M □□□071C31	124
	17	303	1.1		20	246	1.3	158.667	GFL05-3M □□□071C31	124
	16	310	2.0		20	252	2.4	162.583	GFL06-3M □□□071C31	124
	15	338	1.0		18	274	1.2	177.027	GFL05-3M □□□071C31	124
	15	343	1.8		18	278	2.1	179.520	GFL06-3M □□□071C31	124
	13	381	0.9		16	309	1.0	199.467	GFL05-3M □□□071C31	124
	13	386	1.6		16	313	1.9	202.237	GFL06-3M □□□071C31	124
	13	394	3.2		16	320	3.8	206.519	GFL07-3M □□□071C31	124
	12	429	3.1		14	348	3.8	224.636	GFL07-3M □□□071C31	124
	11	441	1.4		14	358	1.7	231.200	GFL06-3M □□□071C31	124
	10	483	2.6		13	392	3.1	253.111	GFL07-3M □□□071C31	124
	10	497	1.2		12	403	1.5	260.457	GFL06-3M □□□071C31	124
	9.1	555	2.5		11	450	3.0	290.706	GFL07-3M □□□071C31	124
	9.0	559	1.2		11	454	1.4	293.018	GFL06-3M □□□071C31	124
	8.8	571	1.1		11	464	1.3	299.200	GFL06-3M □□□071C31	124
	8.0	625	2.0		9.9	507	2.4	327.556	GFL07-3M □□□071C31	124
	7.5	673	2.0		9.2	547	2.5	352.811	GFL07-3M □□□071C31	124
	7.2	701	0.9		8.8	569	1.1	367.200	GFL06-3M □□□071C31	124
	6.6	759	1.7		8.1	616	2.0	397.533	GFL07-3M □□□071C31	124
	6.1	821	1.5		7.5	666	1.9	430.222	GFL07-3M □□□071C31	124
	5.1	983	2.8		6.3	798	3.3	514.881	GFL09-3M □□□071C31	124
	5.0	996	1.3		6.2	809	1.5	522.133	GFL07-3M □□□071C31	124
	4.7	1058	2.0		5.8	859	2.4	554.470	GFL09-3M □□□071C31	124
	4.7	1073	1.1		5.7	871	1.3	562.391	GFL07-3M □□□071C31	124
	4.2	1193	1.9		5.2	968	2.3	624.879	GFL09-3M □□□071C31	124
	4.2	1209	1.0		5.1	982	1.2	633.680	GFL07-3M □□□071C31	124
	3.8	1338	1.6		4.6	1086	1.9	700.875	GFL09-3M □□□071C31	124
	3.7	1372	0.8		4.5	1114	1.0	718.786	GFL07-3M □□□071C31	124
	3.3	1507	1.5		4.1	1224	1.8	789.875	GFL09-3M □□□071C31	124

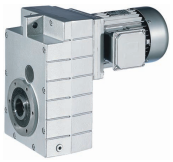

Selection tables

50 Hz, 60 Hz: P_N = 0.55 kW

n_N	1405 r/min				1720 r/min			i		
f_N	50 Hz				60 Hz					
	n_2 [r/min]	M_2 [Nm]	c		n_2 [r/min]	M_2 [Nm]	c			
	384	13	4.5		466	11	5.3	3.659	GFL04-2M □□□071C42	108
	280	18	4.5		340	15	5.3	5.018	GFL04-2M □□□071C42	108
	241	21	4.5		292	17	5.3	5.833	GFL04-2M □□□071C42	108
	219	23	4.2		266	19	4.9	6.422	GFL04-2M □□□071C42	108
	200	25	4.2		243	21	4.9	7.025	GFL04-2M □□□071C42	108
	168	30	4.5		204	25	5.3	8.379	GFL04-2M □□□071C42	108
	156	33	4.5		189	27	5.3	9.010	GFL05-2M □□□071C42	108
					184	28	5.3	9.333	GFL04-2M □□□071C42	108
	137	37	4.2		167	30	4.9	10.238	GFL04-2M □□□071C42	108
	122	42	4.3		148	34	5.1	11.491	GFL04-2M □□□071C42	108
	110	46	3.6		133	38	4.2	12.800	GFL04-2M □□□071C42	108
	96	53	3.4		116	44	4.0	14.706	GFL04-2M □□□071C42	108
	87	58	3.1		106	48	3.6	16.087	GFL04-2M □□□071C42	108
	78	65	2.6		95	53	3.0	17.920	GFL04-2M □□□071C42	108
	69	74	2.5		83	61	2.9	20.519	GFL04-2M □□□071C42	108
	62	83	2.0		75	68	2.4	22.857	GFL04-2M □□□071C42	108
	56	91	2.0		68	74	2.5	25.136	GFL04-2M □□□071C42	108
	50	102	1.7		61	83	2.0	28.000	GFL04-2M □□□071C42	108
	50	102	3.1		61	83	3.8	28.000	GFL05-2M □□□071C42	108
	45	115	1.6		54	94	2.0	31.600	GFL04-2M □□□071C42	108
	43	117	2.9		53	96	3.6	32.344	GFL05-2M □□□071C42	108
	40	128	1.3		48	104	1.6	35.200	GFL04-2M □□□071C42	108
	39	132	2.4		47	108	2.9	36.444	GFL05-2M □□□071C42	108
	35	146	2.4		42	119	2.9	40.233	GFL05-2M □□□071C42	108
	35	148	1.3		42	121	1.6	40.697	GFL04-2M □□□071C42	108
	34	148	3.2		42	121	3.9	40.800	GFL06-2M □□□071C42	108
	31	164	1.0		38	134	1.3	45.333	GFL04-2M □□□071C42	108
	31	164	1.9		38	134	2.4	45.333	GFL05-2M □□□071C42	108
	31	167	3.2		37	136	3.9	45.963	GFL06-2M □□□071C42	108
	27	189	1.6		33	154	2.0	52.067	GFL05-2M □□□071C42	108
	27	191	2.9		32	156	3.5	52.800	GFL06-2M □□□071C42	108
	24	213	1.5		29	174	1.9	58.667	GFL05-2M □□□071C42	108
	24	216	2.9		29	176	3.5	59.481	GFL06-2M □□□071C42	108
	23	220	0.9		28	180	1.2	61.653	GFL05-3M □□□071C42	124
	22	229	1.2		27	187	1.5	63.190	GFL05-2M □□□071C42	108
	22	232	2.4		27	190	2.9	64.080	GFL06-2M □□□071C42	108
	21	237	2.1		26	193	2.6	66.213	GFL06-3M □□□071C42	124
	20	258	1.2		24	211	1.4	71.200	GFL05-2M □□□071C42	108
	20	257	1.9		24	210	2.4	72.000	GFL06-3M □□□071C42	124
	20	262	2.4		24	214	2.9	72.189	GFL06-2M □□□071C42	108

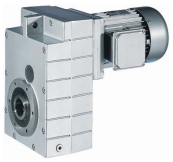

Selection tables

50 Hz, 60 Hz: P_N = 0.55 kW

n_N	1405 r/min				1720 r/min			i		
f_N	50 Hz				60 Hz					
	n_2 [r/min]	M_2 [Nm]	c		n_2 [r/min]	M_2 [Nm]	c			
	18	281	0.8		22	229	1.0	78.639	GFL05-3M □□□071C42	124
	17	294	1.4		21	240	1.7	81.000	GFL06-2M □□□071C42	108
	17	290	1.7		21	237	2.1	81.111	GFL06-3M □□□071C42	124
	16	315	1.5		19	257	1.9	88.200	GFL06-3M □□□071C42	124
	16	322	0.9		19	263	1.2	90.123	GFL05-3M □□□071C42	124
	15	331	1.4		19	270	1.7	91.250	GFL06-2M □□□071C42	108
	15	330	2.9		18	270	3.6	92.413	GFL07-3M □□□071C42	124
	14	355	1.5		17	290	1.9	99.361	GFL06-3M □□□071C42	124
	14	363	0.9		17	296	1.1	101.547	GFL05-3M □□□071C42	124
	14	372	2.9		16	304	3.6	104.127	GFL07-3M □□□071C42	124
	12	404	2.6		15	330	3.1	113.206	GFL07-3M □□□071C42	124
	12	411	0.8		15	335	1.0	114.952	GFL05-3M □□□071C42	124
	12	416	1.3		15	340	1.6	116.571	GFL06-3M □□□071C42	124
	11	456	2.6		13	372	3.1	127.556	GFL07-3M □□□071C42	124
	11	469	1.3		13	383	1.6	131.323	GFL06-3M □□□071C42	124
	9.7	516	1.1		12	421	1.3	144.320	GFL06-3M □□□071C42	124
	9.5	526	2.2		12	430	2.7	147.347	GFL07-3M □□□071C42	124
	8.6	581	1.1		11	474	1.3	162.583	GFL06-3M □□□071C42	124
	8.5	593	2.1		10	484	2.6	166.025	GFL07-3M □□□071C42	124
	7.8	641	0.9		9.5	524	1.2	179.520	GFL06-3M □□□071C42	124
	7.7	655	1.9		9.3	535	2.3	183.285	GFL07-3M □□□071C42	124
	7.6	661	3.2		9.2	540	3.9	185.111	GFL09-3M □□□071C42	124
	7.0	722	0.8		8.4	590	1.0	202.237	GFL06-3M □□□071C42	124
	6.8	738	1.7		8.3	603	2.1	206.519	GFL07-3M □□□071C42	124
	6.7	745	3.2		8.2	609	3.9	208.617	GFL09-3M □□□071C42	124
	6.3	803	1.7		7.6	656	2.0	224.636	GFL07-3M □□□071C42	124
	6.3	803	3.0		7.6	656	3.7	224.778	GFL09-3M □□□071C42	124
	5.6	904	1.4		6.7	739	1.7	253.111	GFL07-3M □□□071C42	124
	5.6	905	3.0		6.7	739	3.7	253.321	GFL09-3M □□□071C42	124
	4.8	1039	1.3		5.9	848	1.6	290.706	GFL07-3M □□□071C42	124
	4.8	1039	2.5		5.9	849	3.1	290.889	GFL09-3M □□□071C42	124
	4.3	1170	1.1		5.2	956	1.3	327.556	GFL07-3M □□□071C42	124
	4.3	1171	2.5		5.2	957	3.1	327.827	GFL09-3M □□□071C42	124
	4.0	1260	1.1		4.8	1030	1.3	352.811	GFL07-3M □□□071C42	124
	4.0	1261	2.2		4.8	1030	2.7	353.033	GFL09-3M □□□071C42	124
	3.5	1420	0.9		4.3	1160	1.1	397.533	GFL07-3M □□□071C42	124
	3.5	1421	2.2		4.3	1161	2.7	397.863	GFL09-3M □□□071C42	124
	3.3	1516	1.8		4.0	1238	2.2	424.247	GFL09-3M □□□071C42	124
	3.3	1537	0.8		4.0	1255	1.0	430.222	GFL07-3M □□□071C42	124
	2.7	1839	1.5		3.3	1503	1.8	514.881	GFL09-3M □□□071C42	124

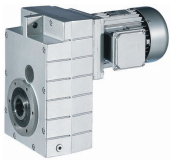

Selection tables

50 Hz, 60 Hz: P_N = 0.55 kW

n_N	1405 r/min				1720 r/min			i		
f_N	50 Hz				60 Hz					
	n_2 [r/min]	M_2 [Nm]	c		n_2 [r/min]	M_2 [Nm]	c			
	2.5	1981	1.1		3.1	1618	1.3	554.470	GFL09-3M □□□071C42	124
	2.3	2232	1.0		2.7	1824	1.2	624.879	GFL09-3M □□□071C42	124
	2.0	2504	0.8		2.4	2045	1.0	700.875	GFL09-3M □□□071C42	124
	1.8	2822	0.8		2.2	2305	1.0	789.875	GFL09-3M □□□071C42	124

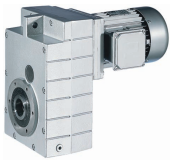

Selection tables

50 Hz, 60 Hz: P_N = 0.55 kW

n_N	930 r/min				1140 r/min			i		
f_N	50 Hz				60 Hz					
	n_2 [r/min]	M_2 [Nm]	c		n_2 [r/min]	M_2 [Nm]	c			
	254	20	3.7		309	16	4.6	3.659	GFL04-2M □□□080C33	108
	185	27	3.7		225	22	4.6	5.018	GFL04-2M □□□080C33	108
	159	32	3.7		194	26	4.6	5.833	GFL04-2M □□□080C33	108
	145	35	3.2		176	29	3.9	6.422	GFL04-2M □□□080C33	108
	132	38	2.9		161	31	3.6	7.025	GFL04-2M □□□080C33	108
	111	46	3.7		135	37	4.6	8.379	GFL04-2M □□□080C33	108
	100	51	3.2		121	42	4.0	9.333	GFL04-2M □□□080C33	108
	91	56	2.8		110	46	3.5	10.238	GFL04-2M □□□080C33	108
	81	63	2.9		98	51	3.5	11.491	GFL04-2M □□□080C33	108
	73	70	2.4		88	57	2.9	12.800	GFL04-2M □□□080C33	108
	63	81	2.3		77	66	2.8	14.706	GFL04-2M □□□080C33	108
	58	88	2.1		70	72	2.5	16.087	GFL04-2M □□□080C33	108
	52	98	1.7		63	80	2.1	17.920	GFL04-2M □□□080C33	108
	52	98	3.2		63	80	3.9	17.920	GFL05-2M □□□080C33	108
	46	111	3.0		56	91	3.7	20.286	GFL05-2M □□□080C33	108
	45	112	1.6		55	92	2.0	20.519	GFL04-2M □□□080C33	108
	41	125	1.3		49	102	1.6	22.857	GFL04-2M □□□080C33	108
	41	125	2.5		49	102	3.1	22.857	GFL05-2M □□□080C33	108
	37	136	2.5		46	111	3.1	24.850	GFL05-2M □□□080C33	108
	37	138	1.3		45	112	1.6	25.136	GFL04-2M □□□080C33	108
	33	153	1.1		40	125	1.3	28.000	GFL04-2M □□□080C33	108
	33	153	2.0		40	125	2.5	28.000	GFL05-2M □□□080C33	108
	29	173	1.1		36	141	1.3	31.600	GFL04-2M □□□080C33	108
	29	177	1.9		35	145	2.4	32.344	GFL05-2M □□□080C33	108
	28	180	3.1		35	147	3.8	32.800	GFL06-2M □□□080C33	108
	26	193	0.9		32	157	1.1	35.200	GFL04-2M □□□080C33	108
	26	200	1.6		31	163	1.9	36.444	GFL05-2M □□□080C33	108
	25	202	3.0		31	165	3.7	36.951	GFL06-2M □□□080C33	108
	23	220	1.6		28	180	1.9	40.233	GFL05-2M □□□080C33	108
	23	223	0.8		28	182	1.0	40.697	GFL04-2M □□□080C33	108
	23	224	2.6		28	182	3.2	40.800	GFL06-2M □□□080C33	108
	21	248	1.3		25	203	1.6	45.333	GFL05-2M □□□080C33	108
	20	252	2.4		25	205	3.0	45.963	GFL06-2M □□□080C33	108
	18	285	1.1		22	233	1.3	52.067	GFL05-2M □□□080C33	108
	18	285	2.6		22	233	3.2	52.067	GFL07-2M □□□080C33	108
	18	289	2.3		21	236	2.8	52.800	GFL06-2M □□□080C33	108
	16	321	1.0		19	262	1.2	58.667	GFL05-2M □□□080C33	108
	16	321	2.6		19	262	3.2	58.667	GFL07-2M □□□080C33	108
	16	326	1.9		19	266	2.3	59.481	GFL06-2M □□□080C33	108
	15	346	0.8		18	282	1.0	63.190	GFL05-2M □□□080C33	108

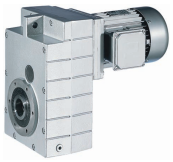

Selection tables

50 Hz, 60 Hz: P_N = 0.55 kW

n_N	930 r/min				1140 r/min			i		
f_N	50 Hz				60 Hz					
	n_2 [r/min]	M_2 [Nm]	c		n_2 [r/min]	M_2 [Nm]	c			
	15	346	2.3		18	282	2.8	63.190	GFL07-2M □□□080C33	108
	15	351	1.6		18	286	2.0	64.080	GFL06-2M □□□080C33	108
	14	352	2.5		17	288	3.1	65.306	GFL07-3M □□□080C33	124
	14	357	1.4		17	292	1.7	66.213	GFL06-3M □□□080C33	124
	13	390	2.3		16	318	2.8	71.200	GFL07-2M □□□080C33	108
	13	389	1.3		16	317	1.6	72.000	GFL06-3M □□□080C33	124
	13	396	1.6		16	323	1.9	72.189	GFL06-2M □□□080C33	108
	13	391	2.2		16	319	2.7	72.452	GFL07-3M □□□080C33	124
	12	438	1.8		14	357	2.2	79.875	GFL07-2M □□□080C33	108
	12	444	1.0		14	362	1.2	81.000	GFL06-2M □□□080C33	108
	12	438	1.1		14	357	1.4	81.111	GFL06-3M □□□080C33	124
	11	441	2.2		14	359	2.7	81.636	GFL07-3M □□□080C33	124
	11	476	1.0		13	388	1.3	88.200	GFL06-3M □□□080C33	124
	10	493	1.8		13	402	2.2	90.000	GFL07-2M □□□080C33	108
	10	500	1.0		12	408	1.2	91.250	GFL06-2M □□□080C33	108
	10	499	1.9		12	407	2.4	92.413	GFL07-3M □□□080C33	124
	9.4	536	1.0		11	437	1.3	99.361	GFL06-3M □□□080C33	124
	8.9	562	1.9		11	458	2.4	104.127	GFL07-3M □□□080C33	124
	8.2	611	1.7		10	498	2.1	113.206	GFL07-3M □□□080C33	124
	8.0	629	0.8		9.7	513	1.0	116.571	GFL06-3M □□□080C33	124
	7.3	688	1.7		8.9	562	2.1	127.556	GFL07-3M □□□080C33	124
	7.1	709	0.8		8.6	578	1.0	131.323	GFL06-3M □□□080C33	124
	6.3	795	1.4		7.7	649	1.8	147.347	GFL07-3M □□□080C33	124
	6.3	803	2.6		7.6	655	3.1	148.815	GFL09-3M □□□080C33	124
	5.6	896	1.4		6.8	731	1.7	166.025	GFL07-3M □□□080C33	124
	5.6	905	2.6		6.7	738	3.1	167.712	GFL09-3M □□□080C33	124
	5.1	989	1.2		6.2	807	1.5	183.285	GFL07-3M □□□080C33	124
	5.0	999	2.2		6.1	815	2.7	185.111	GFL09-3M □□□080C33	124
	4.5	1115	1.1		5.5	909	1.4	206.519	GFL07-3M □□□080C33	124
	4.5	1126	2.2		5.4	919	2.7	208.617	GFL09-3M □□□080C33	124
	4.1	1212	1.1		5.0	989	1.4	224.636	GFL07-3M □□□080C33	124
	4.1	1213	2.0		5.0	990	2.4	224.778	GFL09-3M □□□080C33	124
	3.7	1366	0.9		4.5	1114	1.1	253.111	GFL07-3M □□□080C33	124
	3.7	1367	2.0		4.5	1115	2.4	253.321	GFL09-3M □□□080C33	124
	3.2	1569	0.9		3.9	1280	1.1	290.706	GFL07-3M □□□080C33	124
	3.2	1570	1.7		3.9	1281	2.1	290.889	GFL09-3M □□□080C33	124
	2.8	1769	1.7		3.5	1443	2.1	327.827	GFL09-3M □□□080C33	124
	2.6	1905	1.5		3.2	1554	1.8	353.033	GFL09-3M □□□080C33	124
	2.6	1933	2.3		3.2	1577	2.8	358.077	GFL11-3M □□□080C33	124
	2.3	2147	1.5		2.8	1752	1.8	397.863	GFL09-3M □□□080C33	124

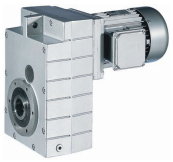

Selection tables

50 Hz, 60 Hz: P_N = 0.55 kW

n_N	930 r/min				1140 r/min			i		
f_N	50 Hz				60 Hz					
	n_2 [r/min]	M_2 [Nm]	c		n_2 [r/min]	M_2 [Nm]	c			
	2.3	2178	2.3		2.8	1776	2.8	403.467	GFL11-3M □□□080C33	124
	2.2	2290	1.2		2.7	1868	1.5	424.247	GFL09-3M □□□080C33	124
	2.2	2322	2.6		2.6	1894	3.1	430.222	GFL11-3M □□□080C33	124
	1.8	2779	1.0		2.2	2267	1.2	514.881	GFL09-3M □□□080C33	124
	1.8	2818	2.1		2.2	2299	2.6	522.133	GFL11-3M □□□080C33	124
	1.7	3035	1.8		2.0	2476	2.1	562.391	GFL11-3M □□□080C33	124
	1.5	3420	1.7		1.8	2790	2.1	633.680	GFL11-3M □□□080C33	124
	1.3	3837	1.4		1.6	3130	1.7	710.888	GFL11-3M □□□080C33	124
	1.2	4323	1.4		1.4	3527	1.7	801.000	GFL11-3M □□□080C33	124

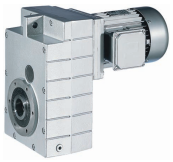

Selection tables

50 Hz, 60 Hz: P_N = 0.75 kW

n_N	1410 r/min				1720 r/min			i		
f_N	50 Hz				60 Hz					
	n_2 [r/min]	M_2 [Nm]	c		n_2 [r/min]	M_2 [Nm]	c			
	385	18	4.2		467	15	4.8	3.659	GFL04-2M □□□080C32	110
	281	25	4.2		341	20	4.8	5.018	GFL04-2M □□□080C32	110
	242	29	4.2		293	24	4.8	5.833	GFL04-2M □□□080C32	110
	220	32	3.6		266	26	4.1	6.422	GFL04-2M □□□080C32	110
	201	35	3.3		243	28	3.8	7.025	GFL04-2M □□□080C32	110
	168	41	4.2		204	34	4.8	8.379	GFL04-2M □□□080C32	110
	151	46	3.6		183	38	4.2	9.333	GFL04-2M □□□080C32	110
	138	50	3.2		167	41	3.7	10.238	GFL04-2M □□□080C32	110
	123	57	3.2		149	46	3.7	11.491	GFL04-2M □□□080C32	110
	110	63	2.6		134	52	3.1	12.800	GFL04-2M □□□080C32	110
	96	72	2.5		116	59	2.9	14.706	GFL04-2M □□□080C32	110
	88	79	2.3		106	65	2.7	16.087	GFL04-2M □□□080C32	110
	79	88	1.9		95	72	2.2	17.920	GFL04-2M □□□080C32	110
	69	101	1.8		83	83	2.1	20.519	GFL04-2M □□□080C32	110
	62	113	1.5		75	92	1.7	22.857	GFL04-2M □□□080C32	110
	62	113	2.8		75	92	3.2	22.857	GFL05-2M □□□080C32	110
	57	122	2.8		69	100	3.4	24.850	GFL05-2M □□□080C32	110
	56	124	1.5		68	102	1.8	25.136	GFL04-2M □□□080C32	110
	50	138	1.2		61	113	1.5	28.000	GFL04-2M □□□080C32	110
	50	138	2.3		61	113	2.8	28.000	GFL05-2M □□□080C32	110
	45	156	1.2		54	128	1.4	31.600	GFL04-2M □□□080C32	110
	44	159	2.2		53	131	2.6	32.344	GFL05-2M □□□080C32	110
	40	173	1.0		49	142	1.2	35.200	GFL04-2M □□□080C32	110
	39	180	1.8		47	147	2.1	36.444	GFL05-2M □□□080C32	110
	35	198	1.7		43	163	2.1	40.233	GFL05-2M □□□080C32	110
	35	201	0.9		42	164	1.1	40.697	GFL04-2M □□□080C32	110
	35	201	2.9		42	165	3.5	40.800	GFL06-2M □□□080C32	110
	31	223	1.4		38	183	1.7	45.333	GFL05-2M □□□080C32	110
	31	227	2.7		37	186	3.3	45.963	GFL06-2M □□□080C32	110
	27	257	1.2		33	210	1.5	52.067	GFL05-2M □□□080C32	110
	27	257	2.9		33	210	3.5	52.067	GFL07-2M □□□080C32	110
	27	260	2.5		32	213	3.1	52.800	GFL06-2M □□□080C32	110
	24	289	1.1		29	237	1.4	58.667	GFL05-2M □□□080C32	110
	24	289	2.9		29	237	3.5	58.667	GFL07-2M □□□080C32	110
	24	293	2.1		29	240	2.6	59.481	GFL06-2M □□□080C32	110
	22	311	0.9		27	255	1.1	63.190	GFL05-2M □□□080C32	110
	22	311	2.5		27	255	3.1	63.190	GFL07-2M □□□080C32	110
	22	316	1.8		27	259	2.2	64.080	GFL06-2M □□□080C32	110
	22	317	2.8		26	260	3.4	65.306	GFL07-3M □□□080C32	126
	21	321	1.5		26	263	1.9	66.213	GFL06-3M □□□080C32	126

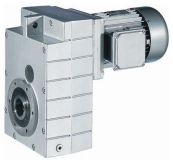

Selection tables

50 Hz, 60 Hz: P_N = 0.75 kW

n_N	1410 r/min				1720 r/min			i		
f_N	50 Hz				60 Hz					
	n_2 [r/min]	M_2 [Nm]	c		n_2 [r/min]	M_2 [Nm]	c			
	20	351	0.9		24	288	1.1	71.200	GFL05-2M □□□080C32	110
	20	351	2.5		24	288	3.1	71.200	GFL07-2M □□□080C32	110
	20	350	1.4		24	287	1.7	72.000	GFL06-3M □□□080C32	126
	20	356	1.7		24	292	2.1	72.189	GFL06-2M □□□080C32	110
	20	352	2.5		24	288	3.0	72.452	GFL07-3M □□□080C32	126
	18	394	2.0		21	323	2.5	79.875	GFL07-2M □□□080C32	110
	17	399	1.1		21	327	1.3	81.000	GFL06-2M □□□080C32	110
	17	394	1.3		21	323	1.5	81.111	GFL06-3M □□□080C32	126
	17	396	2.5		21	325	3.0	81.636	GFL07-3M □□□080C32	126
	16	428	1.1		19	351	1.4	88.200	GFL06-3M □□□080C32	126
	16	444	2.0		19	364	2.5	90.000	GFL07-2M □□□080C32	110
	16	450	1.1		19	369	1.3	91.250	GFL06-2M □□□080C32	110
	15	449	2.1		19	368	2.6	92.413	GFL07-3M □□□080C32	126
	14	482	1.1		17	395	1.4	99.361	GFL06-3M □□□080C32	126
	14	505	2.1		16	414	2.6	104.127	GFL07-3M □□□080C32	126
	13	550	1.9		15	450	2.3	113.206	GFL07-3M □□□080C32	126
	12	566	0.9		15	464	1.1	116.571	GFL06-3M □□□080C32	126
	11	619	1.9		13	508	2.3	127.556	GFL07-3M □□□080C32	126
	11	637	0.9		13	523	1.1	131.323	GFL06-3M □□□080C32	126
	9.6	715	1.6		12	586	1.9	147.347	GFL07-3M □□□080C32	126
	9.5	722	2.8		12	592	3.5	148.815	GFL09-3M □□□080C32	126
	8.5	806	1.5		10	661	1.9	166.025	GFL07-3M □□□080C32	126
	8.4	814	2.8		10	667	3.5	167.712	GFL09-3M □□□080C32	126
	7.7	890	1.4		9.3	729	1.7	183.285	GFL07-3M □□□080C32	126
	7.6	899	2.5		9.2	737	3.0	185.111	GFL09-3M □□□080C32	126
	6.8	1002	1.2		8.3	822	1.5	206.519	GFL07-3M □□□080C32	126
	6.8	1013	2.5		8.2	830	3.0	208.617	GFL09-3M □□□080C32	126
	6.3	1090	1.2		7.6	894	1.5	224.636	GFL07-3M □□□080C32	126
	6.3	1091	2.2		7.6	894	2.7	224.778	GFL09-3M □□□080C32	126
	5.6	1229	1.0		6.8	1007	1.2	253.111	GFL07-3M □□□080C32	126
	5.6	1230	2.2		6.8	1008	2.7	253.321	GFL09-3M □□□080C32	126
	4.9	1411	1.0		5.9	1157	1.2	290.706	GFL07-3M □□□080C32	126
	4.9	1412	1.9		5.9	1158	2.3	290.889	GFL09-3M □□□080C32	126
	4.3	1591	1.9		5.2	1305	2.3	327.827	GFL09-3M □□□080C32	126
	4.0	1713	0.8		4.9	1404	1.0	352.811	GFL07-3M □□□080C32	126
	4.0	1714	1.6		4.8	1405	2.0	353.033	GFL09-3M □□□080C32	126
	3.9	1738	2.5		4.8	1425	3.1	358.077	GFL11-3M □□□080C32	126
	3.5	1931	1.6		4.3	1583	2.0	397.863	GFL09-3M □□□080C32	126
	3.5	1959	2.5		4.2	1606	3.1	403.467	GFL11-3M □□□080C32	126
	3.3	2059	1.3		4.0	1688	1.6	424.247	GFL09-3M □□□080C32	126

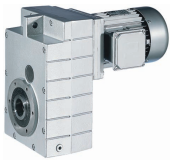

Selection tables

50 Hz, 60 Hz: P_N = 0.75 kW

n_N	1410 r/min				1720 r/min			i		
f_N	50 Hz				60 Hz					
	n_2 [r/min]	M_2 [Nm]	c		n_2 [r/min]	M_2 [Nm]	c			
	3.3	2088	2.8		4.0	1712	3.5	430.222	GFL11-3M □□□080C32	126
	2.7	2499	1.1		3.3	2049	1.3	514.881	GFL09-3M □□□080C32	126
	2.7	2535	2.3		3.3	2078	2.9	522.133	GFL11-3M □□□080C32	126
	2.5	2730	1.9		3.0	2238	2.4	562.391	GFL11-3M □□□080C32	126
	2.2	3076	1.9		2.7	2522	2.3	633.680	GFL11-3M □□□080C32	126
	2.0	3451	1.5		2.4	2829	1.9	710.888	GFL11-3M □□□080C32	126
	1.8	3888	1.5		2.1	3187	1.8	801.000	GFL11-3M □□□080C32	126

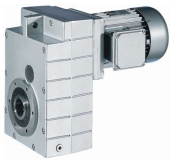

Selection tables

50 Hz, 60 Hz: P_N = 1.1 kW

n_N	1430 r/min				1740 r/min			i		
f_N	50 Hz				60 Hz					
	n_2 [r/min]	M_2 [Nm]	c		n_2 [r/min]	M_2 [Nm]	c			
	391	26	4.2		473	21	4.8	3.659	GFL04-2M □□□090C12	118
	313	33	5.2		378	27	6.0	4.571	GFL05-2M □□□090C12	110
	285	36	3.1		345	29	3.6	5.018	GFL04-2M □□□090C12	118
	245	42	3.7		297	34	4.3	5.833	GFL04-2M □□□090C12	118
	223	46	2.5		269	38	2.8	6.422	GFL04-2M □□□090C12	118
	204	50	2.3		246	41	2.6	7.025	GFL04-2M □□□090C12	118
	171	60	3.0		207	49	3.5	8.379	GFL04-2M □□□090C12	118
	153	67	2.5		185	55	2.9	9.333	GFL04-2M □□□090C12	118
	140	73	2.2		169	60	2.5	10.238	GFL04-2M □□□090C12	118
	124	82	2.2		151	67	2.6	11.491	GFL04-2M □□□090C12	118
	112	91	1.8		135	75	2.1	12.800	GFL04-2M □□□090C12	118
	112	91	3.1		135	75	3.6	12.800	GFL05-2M □□□090C12	110
	98	104	2.9		119	85	3.4	14.538	GFL05-2M □□□090C12	110
	97	105	1.7		118	86	2.0	14.706	GFL04-2M □□□090C12	118
	90	113	2.7		109	93	3.2	15.904	GFL05-2M □□□090C12	110
	89	115	1.6		108	94	1.8	16.087	GFL04-2M □□□090C12	118
	80	128	1.3		97	105	1.5	17.920	GFL04-2M □□□090C12	118
	80	128	2.4		97	105	2.8	17.920	GFL05-2M □□□090C12	110
	71	145	2.3		85	119	2.7	20.286	GFL05-2M □□□090C12	110
	70	146	1.3		84	120	1.4	20.519	GFL04-2M □□□090C12	118
	63	163	1.0		76	134	1.2	22.857	GFL04-2M □□□090C12	118
	63	163	1.9		76	134	2.2	22.857	GFL05-2M □□□090C12	110
	58	177	1.9		70	146	2.4	24.850	GFL05-2M □□□090C12	110
	57	179	1.0		69	147	1.2	25.136	GFL04-2M □□□090C12	118
	51	200	0.8		62	164	1.0	28.000	GFL04-2M □□□090C12	118
	51	200	1.6		62	164	1.9	28.000	GFL05-2M □□□090C12	110
	50	202	3.0		61	166	3.7	28.389	GFL06-2M □□□090C12	110
	44	231	1.5		54	189	1.8	32.344	GFL05-2M □□□090C12	110
	44	234	2.7		53	192	3.3	32.800	GFL06-2M □□□090C12	110
	39	260	1.2		48	213	1.5	36.444	GFL05-2M □□□090C12	110
	39	263	2.3		47	216	2.8	36.951	GFL06-2M □□□090C12	110
	36	287	1.2		43	236	1.5	40.233	GFL05-2M □□□090C12	110
	35	291	2.3		42	239	2.7	40.800	GFL06-2M □□□090C12	110
	32	323	1.0		38	266	1.2	45.333	GFL05-2M □□□090C12	110
	31	328	1.9		38	269	2.3	45.963	GFL06-2M □□□090C12	110
	27	376	1.8		33	309	2.1	52.800	GFL06-2M □□□090C12	110
	24	418	3.0		30	344	3.7	58.667	GFL07-2M □□□090C12	110
	24	424	1.5		29	348	1.8	59.481	GFL06-2M □□□090C12	110
	23	450	2.8		27	370	3.4	63.190	GFL07-2M □□□090C12	110
	22	457	1.3		27	375	1.5	64.080	GFL06-2M □□□090C12	110

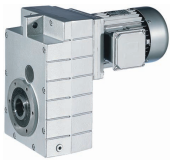

Selection tables

50 Hz, 60 Hz: P_N = 1.1 kW

n_N	1430 r/min				1740 r/min			i		
f_N	50 Hz				60 Hz					
	n_2 [r/min]	M_2 [Nm]	c		n_2 [r/min]	M_2 [Nm]	c			
	22	458	1.9		27	377	2.3	65.306	GFL07-3M □□□090C12	126
	22	465	1.1		26	382	1.3	66.213	GFL06-3M □□□090C12	126
	20	507	2.5		24	417	3.1	71.200	GFL07-2M □□□090C12	110
	20	505	1.0		24	415	1.2	72.000	GFL06-3M □□□090C12	126
	20	514	1.2		24	423	1.5	72.189	GFL06-2M □□□090C12	110
	20	509	1.7		24	418	2.1	72.452	GFL07-3M □□□090C12	126
	20	514	3.0		24	422	3.6	73.173	GFL09-3M □□□090C12	126
	18	561	2.7		22	461	3.3	78.750	GFL09-2M □□□090C12	110
	18	569	1.5		22	468	1.8	79.875	GFL07-2M □□□090C12	110
	18	569	0.9		21	468	1.1	81.111	GFL06-3M □□□090C12	126
	18	573	1.7		21	471	2.1	81.636	GFL07-3M □□□090C12	126
	17	579	3.0		21	476	3.6	82.465	GFL09-3M □□□090C12	126
	16	633	2.7		20	520	3.3	88.750	GFL09-2M □□□090C12	110
	16	641	1.5		19	527	1.8	90.000	GFL07-2M □□□090C12	110
	16	649	1.5		19	533	1.8	92.413	GFL07-3M □□□090C12	126
	15	655	2.6		19	538	3.1	93.333	GFL09-3M □□□090C12	126
	14	731	1.5		17	601	1.8	104.127	GFL07-3M □□□090C12	126
	14	738	2.6		16	607	3.1	105.185	GFL09-3M □□□090C12	126
	13	795	1.3		15	653	1.6	113.206	GFL07-3M □□□090C12	126
	13	803	2.3		15	660	2.8	114.333	GFL09-3M □□□090C12	126
	11	895	1.3		14	736	1.6	127.556	GFL07-3M □□□090C12	126
	11	905	2.3		13	743	2.8	128.852	GFL09-3M □□□090C12	126
	9.7	1034	1.1		12	850	1.3	147.347	GFL07-3M □□□090C12	126
	9.6	1045	2.0		12	859	2.4	148.815	GFL09-3M □□□090C12	126
	8.6	1165	1.1		10	958	1.3	166.025	GFL07-3M □□□090C12	126
	8.5	1177	2.0		10	968	2.4	167.712	GFL09-3M □□□090C12	126
	7.8	1287	1.0		9.4	1057	1.2	183.285	GFL07-3M □□□090C12	126
	7.7	1299	1.7		9.4	1068	2.1	185.111	GFL09-3M □□□090C12	126
	6.9	1450	0.9		8.4	1191	1.0	206.519	GFL07-3M □□□090C12	126
	6.9	1464	1.7		8.3	1204	2.1	208.617	GFL09-3M □□□090C12	126
	6.4	1577	0.9		7.7	1296	1.0	224.636	GFL07-3M □□□090C12	126
	6.4	1577	2.9		7.7	1296	3.5	224.636	GFL11-3M □□□090C12	126
	6.4	1578	1.5		7.7	1297	1.9	224.778	GFL09-3M □□□090C12	126
	5.7	1777	2.9		6.8	1460	3.5	253.111	GFL11-3M □□□090C12	126
	5.7	1778	1.5		6.8	1461	1.9	253.321	GFL09-3M □□□090C12	126
	5.4	1876	2.7		6.5	1542	3.3	267.259	GFL11-3M □□□090C12	126
	4.9	2042	1.3		6.0	1678	1.6	290.889	GFL09-3M □□□090C12	126
	4.4	2299	2.4		5.3	1890	2.9	327.556	GFL11-3M □□□090C12	126
	4.4	2301	1.3		5.3	1891	1.6	327.827	GFL09-3M □□□090C12	126
	4.1	2478	1.1		4.9	2037	1.4	353.033	GFL09-3M □□□090C12	126

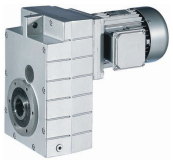

Selection tables

50 Hz, 60 Hz: P_N = 1.1 kW

n_N	1430 r/min				1740 r/min			i		
f_N	50 Hz				60 Hz					
	n_2 [r/min]	M_2 [Nm]	c		n_2 [r/min]	M_2 [Nm]	c			
	4.0	2514	2.1		4.8	2066	2.6	358.077	GFL11-3M □□□090C12	126
	3.6	2793	1.1		4.4	2295	1.4	397.863	GFL09-3M □□□090C12	126
	3.5	2832	2.1		4.3	2328	2.6	403.467	GFL11-3M □□□090C12	126
	3.4	2978	0.9		4.1	2448	1.1	424.247	GFL09-3M □□□090C12	126
	3.3	3020	2.0		4.0	2482	2.4	430.222	GFL11-3M □□□090C12	126
	2.7	3665	1.6		3.3	3012	2.0	522.133	GFL11-3M □□□090C12	126
	2.7	3665	2.9		3.3	3012	3.5	522.133	GFL14-3M □□□090C12	126
	2.5	3948	1.3		3.1	3245	1.6	562.391	GFL11-3M □□□090C12	126
	2.5	3948	2.3		3.1	3245	2.8	562.391	GFL14-3M □□□090C12	126
	2.3	4448	1.3		2.7	3656	1.6	633.680	GFL11-3M □□□090C12	126
	2.3	4448	2.2		2.7	3656	2.7	633.680	GFL14-3M □□□090C12	126
	2.0	4990	1.1		2.4	4101	1.3	710.888	GFL11-3M □□□090C12	126
	2.0	4990	1.8		2.4	4101	2.2	710.888	GFL14-3M □□□090C12	126
	1.8	5623	1.0		2.2	4621	1.3	801.000	GFL11-3M □□□090C12	126
	1.8	5623	1.7		2.2	4621	2.1	801.000	GFL14-3M □□□090C12	126

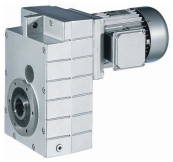

Selection tables

50 Hz, 60 Hz: P_N = 1.5 kW

n_N	1435 r/min				1745 r/min			i		
f_N	50 Hz				60 Hz					
	n_2 [r/min]	M_2 [Nm]	c		n_2 [r/min]	M_2 [Nm]	c			
	392	35	3.1		474	29	3.6	3.659	GFL04-2M □□□090C32	118
	314	44	3.8		380	36	4.4	4.571	GFL05-2M □□□090C32	110
	286	49	2.3		346	40	2.6	5.018	GFL04-2M □□□090C32	118
	246	56	2.7		297	46	3.1	5.833	GFL04-2M □□□090C32	118
	224	62	2.8		271	51	3.2	6.400	GFL05-2M □□□090C32	110
	223	62	1.8		270	51	2.1	6.422	GFL04-2M □□□090C32	118
	204	68	1.7		247	56	1.9	7.025	GFL04-2M □□□090C32	118
	171	81	2.2		207	67	2.5	8.379	GFL04-2M □□□090C32	118
	159	87	3.0		193	72	3.5	9.010	GFL05-2M □□□090C32	110
	154	90	1.8		186	74	2.1	9.333	GFL04-2M □□□090C32	118
	144	96	2.9		174	79	3.3	9.946	GFL05-2M □□□090C32	110
	140	99	1.6		170	82	1.9	10.238	GFL04-2M □□□090C32	118
	126	110	2.5		153	90	2.9	11.360	GFL05-2M □□□090C32	110
	125	111	1.6		151	92	1.9	11.491	GFL04-2M □□□090C32	118
	112	124	1.3		136	102	1.5	12.800	GFL04-2M □□□090C32	118
	112	124	2.3		136	102	2.7	12.800	GFL05-2M □□□090C32	110
	99	141	2.1		119	116	2.5	14.538	GFL05-2M □□□090C32	110
	98	142	1.3		118	117	1.5	14.706	GFL04-2M □□□090C32	118
	90	154	2.0		109	127	2.3	15.904	GFL05-2M □□□090C32	110
	89	156	1.2		108	128	1.4	16.087	GFL04-2M □□□090C32	118
	80	174	1.0		97	143	1.1	17.920	GFL04-2M □□□090C32	118
	80	174	1.8		97	143	2.1	17.920	GFL05-2M □□□090C32	110
	71	196	1.7		86	162	2.0	20.286	GFL05-2M □□□090C32	110
	70	199	0.9		85	163	1.1	20.519	GFL04-2M □□□090C32	118
	70	199	3.2		84	164	3.7	20.571	GFL06-2M □□□090C32	110
	63	221	1.4		76	182	1.6	22.857	GFL05-2M □□□090C32	110
	62	224	2.7		75	185	3.1	23.175	GFL06-2M □□□090C32	110
	58	241	1.4		70	198	1.7	24.850	GFL05-2M □□□090C32	110
	57	244	2.7		69	201	3.2	25.200	GFL06-2M □□□090C32	110
	51	271	1.2		62	223	1.4	28.000	GFL05-2M □□□090C32	110
	51	275	2.2		61	226	2.7	28.389	GFL06-2M □□□090C32	110
	44	313	1.1		54	258	1.3	32.344	GFL05-2M □□□090C32	110
	44	318	2.0		53	261	2.5	32.800	GFL06-2M □□□090C32	110
	39	353	0.9		48	290	1.1	36.444	GFL05-2M □□□090C32	110
	39	358	1.7		47	294	2.1	36.951	GFL06-2M □□□090C32	110
	36	384	2.9		44	316	3.6	39.642	GFL07-2M □□□090C32	110
	36	390	0.9		43	320	1.1	40.233	GFL05-2M □□□090C32	110
	35	395	1.7		43	325	2.0	40.800	GFL06-2M □□□090C32	110
	32	433	2.9		39	356	3.5	44.667	GFL07-2M □□□090C32	110
	31	445	1.4		38	366	1.7	45.963	GFL06-2M □□□090C32	110

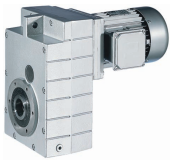

Selection tables

50 Hz, 60 Hz: P_N = 1.5 kW

n_N	1435 r/min				1745 r/min			i		
f_N	50 Hz				60 Hz					
	n_2 [r/min]	M_2 [Nm]	c		n_2 [r/min]	M_2 [Nm]	c			
	28	497	2.9		34	409	3.6	51.333	GFL09-2M □□□090C32	110
	28	504	2.4		33	415	3.0	52.067	GFL07-2M □□□090C32	110
	27	511	1.3		33	421	1.6	52.800	GFL06-2M □□□090C32	110
	25	560	2.9		30	461	3.6	57.852	GFL09-2M □□□090C32	110
	25	568	2.2		30	467	2.7	58.667	GFL07-2M □□□090C32	110
	24	576	1.1		29	474	1.3	59.481	GFL06-2M □□□090C32	110
	23	603	2.6		28	496	3.1	62.300	GFL09-2M □□□090C32	110
	23	612	2.0		28	503	2.5	63.190	GFL07-2M □□□090C32	110
	23	604	2.5		27	497	3.0	63.326	GFL09-3M □□□090C32	126
	22	621	0.9		27	510	1.1	64.080	GFL06-2M □□□090C32	110
	22	623	1.4		27	512	1.7	65.306	GFL07-3M □□□090C32	126
	20	680	2.6		25	559	3.1	70.211	GFL09-2M □□□090C32	110
	20	690	1.9		24	567	2.3	71.200	GFL07-2M □□□090C32	110
	20	699	0.9		24	575	1.1	72.189	GFL06-2M □□□090C32	110
	20	691	1.3		24	568	1.5	72.452	GFL07-3M □□□090C32	126
	20	698	2.2		24	574	2.6	73.173	GFL09-3M □□□090C32	126
	18	763	2.0		22	627	2.4	78.750	GFL09-2M □□□090C32	110
	18	774	1.1		22	636	1.3	79.875	GFL07-2M □□□090C32	110
	18	779	1.3		21	640	1.5	81.636	GFL07-3M □□□090C32	126
	17	787	2.2		21	647	2.6	82.465	GFL09-3M □□□090C32	126
	16	860	2.0		20	707	2.4	88.750	GFL09-2M □□□090C32	110
	16	872	1.1		19	717	1.3	90.000	GFL07-2M □□□090C32	110
	16	882	1.1		19	725	1.3	92.413	GFL07-3M □□□090C32	126
	15	890	1.9		19	732	2.3	93.333	GFL09-3M □□□090C32	126
	14	993	1.1		17	817	1.3	104.127	GFL07-3M □□□090C32	126
	14	1003	1.9		17	825	2.3	105.185	GFL09-3M □□□090C32	126
	13	1080	1.0		15	888	1.2	113.206	GFL07-3M □□□090C32	126
	13	1091	1.7		15	897	2.1	114.333	GFL09-3M □□□090C32	126
	11	1217	1.0		14	1001	1.2	127.556	GFL07-3M □□□090C32	126
	11	1229	1.7		14	1011	2.1	128.852	GFL09-3M □□□090C32	126
	9.7	1406	0.8		12	1156	1.0	147.347	GFL07-3M □□□090C32	126
	9.6	1420	1.4		12	1167	1.8	148.815	GFL09-3M □□□090C32	126
	9.6	1423	2.7		12	1170	3.3	149.144	GFL11-3M □□□090C32	126
	8.6	1600	1.4		10	1316	1.8	167.712	GFL09-3M □□□090C32	126
	8.5	1603	2.7		10	1318	3.3	168.049	GFL11-3M □□□090C32	126
	7.9	1744	2.4		9.5	1434	3.0	182.792	GFL11-3M □□□090C32	126
	7.8	1766	1.3		9.4	1452	1.5	185.111	GFL09-3M □□□090C32	126
	7.1	1928	2.9		8.6	1585	3.6	202.074	GFL14-3M □□□090C32	126
	7.0	1965	2.4		8.4	1616	3.0	205.963	GFL11-3M □□□090C32	126
	6.9	1990	1.3		8.3	1637	1.5	208.617	GFL09-3M □□□090C32	126

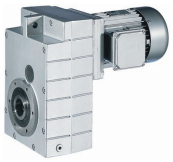

Selection tables

50 Hz, 60 Hz: P_N = 1.5 kW

n_N	1435 r/min				1745 r/min			i		
f_N	50 Hz				60 Hz					
	n_2 [r/min]	M_2 [Nm]	c		n_2 [r/min]	M_2 [Nm]	c			
	6.4	2143	2.1		7.7	1762	2.6	224.636	GFL11-3M □□□090C32	126
	6.4	2144	1.1		7.7	1763	1.4	224.778	GFL09-3M □□□090C32	126
	5.7	2415	2.1		6.9	1986	2.6	253.111	GFL11-3M □□□090C32	126
	5.7	2417	1.1		6.9	1987	1.4	253.321	GFL09-3M □□□090C32	126
	5.4	2549	2.0		6.5	2097	2.4	267.259	GFL11-3M □□□090C32	126
	4.9	2775	1.0		6.0	2282	1.2	290.889	GFL09-3M □□□090C32	126
	4.4	3125	1.8		5.3	2570	2.1	327.556	GFL11-3M □□□090C32	126
	4.4	3127	1.0		5.3	2572	1.2	327.827	GFL09-3M □□□090C32	126
	4.1	3366	2.6		4.9	2768	3.1	352.811	GFL14-3M □□□090C32	126
	4.1	3368	0.8		4.9	2769	1.0	353.033	GFL09-3M □□□090C32	126
	4.0	3416	1.5		4.9	2809	1.9	358.077	GFL11-3M □□□090C32	126
	3.6	3792	2.6		4.4	3119	3.1	397.533	GFL14-3M □□□090C32	126
	3.6	3795	0.8		4.4	3121	1.0	397.863	GFL09-3M □□□090C32	126
	3.6	3849	1.5		4.3	3165	1.9	403.467	GFL11-3M □□□090C32	126
	3.3	4104	1.4		4.0	3375	1.8	430.222	GFL11-3M □□□090C32	126
	3.3	4104	2.6		4.0	3375	3.1	430.222	GFL14-3M □□□090C32	126
	2.8	4981	1.2		3.3	4096	1.5	522.133	GFL11-3M □□□090C32	126
	2.8	4981	2.1		3.3	4096	2.6	522.133	GFL14-3M □□□090C32	126
	2.6	5365	1.0		3.1	4412	1.2	562.391	GFL11-3M □□□090C32	126
	2.6	5365	1.7		3.1	4412	2.0	562.391	GFL14-3M □□□090C32	126
	2.3	6045	1.0		2.7	4971	1.2	633.680	GFL11-3M □□□090C32	126
	2.3	6045	1.6		2.7	4971	2.0	633.680	GFL14-3M □□□090C32	126
	2.0	6781	1.3		2.5	5577	1.6	710.888	GFL14-3M □□□090C32	126
	1.8	7641	1.3		2.2	6284	1.6	801.000	GFL14-3M □□□090C32	126

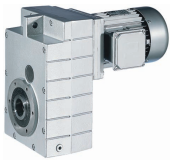

Selection tables

50 Hz, 60 Hz: P_N = 2.2 kW

n_N	1445 r/min				1750 r/min			i		
f_N	50 Hz				60 Hz					
	n_2 [r/min]	M_2 [Nm]	c		n_2 [r/min]	M_2 [Nm]	c			
	434	47	3.5		524	39	4.1	3.333	GFL05-2M □□□100C12	110
	316	64	2.6		382	53	3.0	4.571	GFL05-2M □□□100C12	110
	282	72	3.1		340	60	3.5	5.133	GFL05-2M □□□100C12	110
	255	80	2.9		308	66	3.3	5.667	GFL05-2M □□□100C12	110
	226	90	1.9		273	75	2.2	6.400	GFL05-2M □□□100C12	110
	205	99	2.5		248	82	2.9	7.040	GFL05-2M □□□100C12	110
	186	110	2.4		225	91	2.7	7.771	GFL05-2M □□□100C12	110
	160	127	2.1		194	105	2.4	9.010	GFL05-2M □□□100C12	110
	145	140	2.0		176	116	2.3	9.946	GFL05-2M □□□100C12	110
	143	142	3.2		173	118	3.7	10.092	GFL06-2M □□□100C12	110
	127	160	1.7		154	132	2.0	11.360	GFL05-2M □□□100C12	110
	113	181	1.6		136	149	1.8	12.800	GFL05-2M □□□100C12	110
	111	183	3.2		135	151	3.7	12.978	GFL06-2M □□□100C12	110
	99	205	1.5		120	169	1.7	14.538	GFL05-2M □□□100C12	110
	98	208	3.1		118	172	3.5	14.743	GFL06-2M □□□100C12	110
	91	224	1.4		110	185	1.6	15.904	GFL05-2M □□□100C12	110
	90	227	2.8		108	188	3.2	16.128	GFL06-2M □□□100C12	110
	81	253	1.2		97	209	1.4	17.920	GFL05-2M □□□100C12	110
	80	256	2.3		96	212	2.7	18.169	GFL06-2M □□□100C12	110
	71	286	1.2		86	236	1.3	20.286	GFL05-2M □□□100C12	110
	70	290	2.2		85	240	2.6	20.571	GFL06-2M □□□100C12	110
	63	322	1.0		76	266	1.1	22.857	GFL05-2M □□□100C12	110
	62	327	1.8		75	270	2.1	23.175	GFL06-2M □□□100C12	110
	58	351	1.0		70	289	1.2	24.850	GFL05-2M □□□100C12	110
	57	355	1.8		69	294	2.2	25.200	GFL06-2M □□□100C12	110
	52	395	3.1		62	326	3.8	28.000	GFL07-2M □□□100C12	110
	51	400	1.5		62	331	1.8	28.389	GFL06-2M □□□100C12	110
	45	456	3.0		54	377	3.6	32.344	GFL07-2M □□□100C12	110
	44	463	1.4		53	382	1.7	32.800	GFL06-2M □□□100C12	110
	40	514	2.4		48	424	2.9	36.444	GFL07-2M □□□100C12	110
	39	521	1.2		47	430	1.4	36.951	GFL06-2M □□□100C12	110
	37	559	2.5		44	462	3.0	39.642	GFL07-2M □□□100C12	110
	35	576	1.1		43	475	1.4	40.800	GFL06-2M □□□100C12	110
	32	630	2.0		39	520	2.4	44.667	GFL07-2M □□□100C12	110
	31	648	0.9		38	535	1.1	45.963	GFL06-2M □□□100C12	110
	28	724	2.8		34	598	3.4	51.333	GFL09-2M □□□100C12	110
	28	734	1.8		34	606	2.2	52.067	GFL07-2M □□□100C12	110
	25	816	2.8		30	674	3.4	57.852	GFL09-2M □□□100C12	110
	25	828	1.5		30	683	1.9	58.667	GFL07-2M □□□100C12	110
	23	879	2.3		28	726	2.8	62.300	GFL09-2M □□□100C12	110

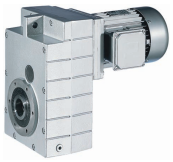

Selection tables

50 Hz, 60 Hz: P_N = 2.2 kW

n_N	1445 r/min				1750 r/min			i		
f_N	50 Hz				60 Hz					
	n_2 [r/min]	M_2 [Nm]	c		n_2 [r/min]	M_2 [Nm]	c			
	23	891	1.4		28	736	1.7	63.190	GFL07-2M □□□100C12	110
	23	891	2.9		28	736	3.5	63.190	GFL11-2M □□□100C12	110
	23	880	1.7		28	727	2.1	63.326	GFL09-3M □□□100C12	126
	22	907	1.0		27	749	1.2	65.306	GFL07-3M □□□100C12	126
	22	907	3.2		27	749	3.9	65.306	GFL11-3M □□□100C12	126
	21	990	2.3		25	818	2.8	70.211	GFL09-2M □□□100C12	110
	20	1004	1.3		25	829	1.5	71.200	GFL07-2M □□□100C12	110
	20	1004	2.9		25	829	3.5	71.200	GFL11-2M □□□100C12	110
	20	1007	0.9		24	831	1.0	72.452	GFL07-3M □□□100C12	126
	20	1017	1.5		24	839	1.8	73.173	GFL09-3M □□□100C12	126
	20	1019	2.8		24	841	3.4	73.335	GFL11-3M □□□100C12	126
	18	1111	1.5		22	917	1.8	78.750	GFL09-2M □□□100C12	110
	18	1127	2.3		22	930	2.8	79.875	GFL11-2M □□□100C12	110
	18	1134	0.9		21	937	1.0	81.636	GFL07-3M □□□100C12	126
	18	1146	1.5		21	946	1.8	82.465	GFL09-3M □□□100C12	126
	18	1148	2.8		21	948	3.4	82.631	GFL11-3M □□□100C12	126
	16	1252	1.4		20	1034	1.7	88.750	GFL09-2M □□□100C12	110
	16	1270	2.3		19	1048	2.8	90.000	GFL11-2M □□□100C12	110
	16	1297	1.3		19	1071	1.6	93.333	GFL09-3M □□□100C12	126
	15	1300	2.5		19	1073	3.0	93.540	GFL11-3M □□□100C12	126
	14	1461	1.3		17	1207	1.6	105.185	GFL09-3M □□□100C12	126
	14	1464	2.5		17	1209	3.0	105.397	GFL11-3M □□□100C12	126
	13	1589	1.2		15	1312	1.4	114.333	GFL09-3M □□□100C12	126
	13	1592	2.2		15	1315	2.7	114.586	GFL11-3M □□□100C12	126
	11	1790	1.2		14	1478	1.4	128.852	GFL09-3M □□□100C12	126
	11	1794	2.2		14	1481	2.7	129.111	GFL11-3M □□□100C12	126
	9.7	2068	1.0		12	1707	1.2	148.815	GFL09-3M □□□100C12	126
	9.7	2072	1.9		12	1711	2.3	149.144	GFL11-3M □□□100C12	126
	8.6	2330	1.0		10	1924	1.2	167.712	GFL09-3M □□□100C12	126
	8.6	2335	1.9		10	1928	2.3	168.049	GFL11-3M □□□100C12	126
	7.9	2540	1.7		9.6	2097	2.0	182.792	GFL11-3M □□□100C12	126
	7.8	2572	0.9		9.4	2124	1.1	185.111	GFL09-3M □□□100C12	126
	7.2	2808	2.8		8.6	2318	3.4	202.074	GFL14-3M □□□100C12	126
	7.0	2862	1.7		8.5	2363	2.0	205.963	GFL11-3M □□□100C12	126
	6.9	2899	0.9		8.4	2393	1.1	208.617	GFL09-3M □□□100C12	126
	6.4	3121	1.4		7.8	2577	1.8	224.636	GFL11-3M □□□100C12	126
	6.4	3121	2.8		7.8	2577	3.4	224.636	GFL14-3M □□□100C12	126
	5.7	3517	1.4		6.9	2904	1.8	253.111	GFL11-3M □□□100C12	126
	5.7	3517	2.8		6.9	2904	3.4	253.111	GFL14-3M □□□100C12	126
	5.4	3713	1.4		6.5	3066	1.7	267.259	GFL11-3M □□□100C12	126

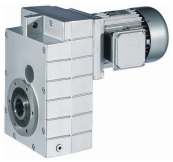

Selection tables

50 Hz, 60 Hz: P_N = 2.2 kW

n_N	1445 r/min				1750 r/min			i		
f_N	50 Hz				60 Hz					
	n_2 [r/min]	M_2 [Nm]	c		n_2 [r/min]	M_2 [Nm]	c			
	5.3	3804	2.6		6.4	3141	3.1	273.778	GFL14-3M □□□100C12	126
	4.4	4551	1.2		5.3	3758	1.5	327.556	GFL11-3M □□□100C12	126
	4.4	4619	2.3		5.3	3814	2.8	332.444	GFL14-3M □□□100C12	126
	4.1	4902	2.1		5.0	4048	2.6	352.811	GFL14-3M □□□100C12	126
	4.0	4975	1.1		4.9	4108	1.3	358.077	GFL11-3M □□□100C12	126
	3.6	5523	2.1		4.4	4561	2.5	397.533	GFL14-3M □□□100C12	126
	3.6	5606	1.1		4.3	4629	1.3	403.467	GFL11-3M □□□100C12	126
	3.4	5978	1.0		4.1	4936	1.2	430.222	GFL11-3M □□□100C12	126
	3.4	5978	1.8		4.1	4936	2.1	430.222	GFL14-3M □□□100C12	126
	2.8	7255	0.8		3.3	5990	1.0	522.133	GFL11-3M □□□100C12	126
	2.8	7255	1.5		3.3	5990	1.8	522.133	GFL14-3M □□□100C12	126
	2.6	7814	1.2		3.1	6452	1.4	562.391	GFL14-3M □□□100C12	126
	2.3	8805	1.1		2.8	7270	1.3	633.680	GFL14-3M □□□100C12	126
	2.0	9877	0.9		2.5	8156	1.1	710.888	GFL14-3M □□□100C12	126
	1.8	11129	0.9		2.2	9190	1.1	801.000	GFL14-3M □□□100C12	126

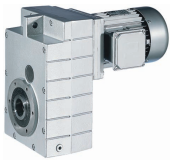

Selection tables

50 Hz, 60 Hz: P_N = 3.0 kW

n_N	1445 r/min				1755 r/min			i		
f_N	50 Hz				60 Hz					
	n_2 [r/min]	M_2 [Nm]	c		n_2 [r/min]	M_2 [Nm]	c			
	434	64	2.6		524	53	3.0	3.333	GFL05-2M □□□100C32	110
	316	88	1.9		382	72	2.2	4.571	GFL05-2M □□□100C32	110
	282	99	2.3		340	81	2.6	5.133	GFL05-2M □□□100C32	110
	255	109	2.1		308	90	2.5	5.667	GFL05-2M □□□100C32	110
	226	123	1.4		273	101	1.6	6.400	GFL05-2M □□□100C32	110
	224	124	2.8		271	102	3.3	6.450	GFL06-2M □□□100C32	110
	205	135	1.8		248	111	2.1	7.040	GFL05-2M □□□100C32	110
	202	137	3.2		244	113	3.6	7.147	GFL06-2M □□□100C32	110
	186	149	1.7		225	123	2.0	7.771	GFL05-2M □□□100C32	110
	160	173	1.5		194	143	1.8	9.010	GFL05-2M □□□100C32	110
	153	182	3.2		184	150	3.7	9.463	GFL06-2M □□□100C32	110
	145	191	1.4		176	158	1.7	9.946	GFL05-2M □□□100C32	110
	143	194	2.4		173	160	2.7	10.092	GFL06-2M □□□100C32	110
	127	219	1.3		154	180	1.5	11.360	GFL05-2M □□□100C32	110
	125	222	2.9		152	182	3.3	11.520	GFL06-2M □□□100C32	110
	113	246	1.2		136	203	1.3	12.800	GFL05-2M □□□100C32	110
	111	250	2.4		135	206	2.7	12.978	GFL06-2M □□□100C32	110
	99	280	1.1		120	230	1.2	14.538	GFL05-2M □□□100C32	110
	98	284	2.3		118	233	2.6	14.743	GFL06-2M □□□100C32	110
	91	306	1.0		110	252	1.2	15.904	GFL05-2M □□□100C32	110
	90	310	2.1		108	255	2.4	16.128	GFL06-2M □□□100C32	110
	81	345	0.9		97	284	1.0	17.920	GFL05-2M □□□100C32	110
	80	349	1.7		96	288	2.0	18.169	GFL06-2M □□□100C32	110
	71	390	0.9		86	321	1.0	20.286	GFL05-2M □□□100C32	110
	71	390	3.2		86	321	3.7	20.286	GFL07-2M □□□100C32	110
	70	396	1.6		85	326	1.9	20.571	GFL06-2M □□□100C32	110
	63	440	2.8		76	362	3.3	22.857	GFL07-2M □□□100C32	110
	62	446	1.4		75	367	1.6	23.175	GFL06-2M □□□100C32	110
	58	478	2.8		70	394	3.4	24.850	GFL07-2M □□□100C32	110
	57	485	1.3		69	399	1.6	25.200	GFL06-2M □□□100C32	110
	52	539	2.3		62	443	2.8	28.000	GFL07-2M □□□100C32	110
	51	546	1.1		62	450	1.4	28.389	GFL06-2M □□□100C32	110
	45	622	2.2		54	512	2.7	32.344	GFL07-2M □□□100C32	110
	44	628	3.0		53	517	3.6	32.667	GFL09-2M □□□100C32	110
	44	631	1.0		53	519	1.2	32.800	GFL06-2M □□□100C32	110
	40	701	1.8		48	577	2.2	36.444	GFL07-2M □□□100C32	110
	39	708	3.0		47	583	3.6	36.815	GFL09-2M □□□100C32	110
	39	711	0.9		47	585	1.0	36.951	GFL06-2M □□□100C32	110
	37	763	1.8		44	628	2.2	39.642	GFL07-2M □□□100C32	110
	36	763	2.5		44	628	3.1	39.667	GFL09-2M □□□100C32	110

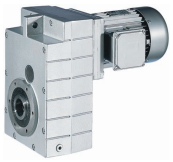

Selection tables

50 Hz, 60 Hz: P_N = 3.0 kW

n_N	1445 r/min				1755 r/min			i		
f_N	50 Hz				60 Hz					
	n_2 [r/min]	M_2 [Nm]	c		n_2 [r/min]	M_2 [Nm]	c			
	35	785	0.8		43	646	1.0	40.800	GFL06-2M □□□100C32	110
	32	859	1.5		39	707	1.8	44.667	GFL07-2M □□□100C32	110
	32	860	2.5		39	708	3.1	44.704	GFL09-2M □□□100C32	110
	28	987	2.0		34	813	2.5	51.333	GFL09-2M □□□100C32	110
	28	1002	1.3		34	825	1.6	52.067	GFL07-2M □□□100C32	110
	28	1002	2.5		34	825	3.1	52.067	GFL11-2M □□□100C32	110
	25	1113	2.0		30	916	2.5	57.852	GFL09-2M □□□100C32	110
	25	1128	1.1		30	929	1.4	58.667	GFL07-2M □□□100C32	110
	25	1128	2.5		30	929	3.1	58.667	GFL11-2M □□□100C32	110
	23	1198	1.7		28	987	2.1	62.300	GFL09-2M □□□100C32	110
	23	1215	1.0		28	1001	1.2	63.190	GFL07-2M □□□100C32	110
	23	1215	2.1		28	1001	2.6	63.190	GFL11-2M □□□100C32	110
	23	1200	1.3		28	988	1.5	63.326	GFL09-3M □□□100C32	126
	22	1237	2.3		27	1019	2.8	65.306	GFL11-3M □□□100C32	126
	21	1351	1.7		25	1112	2.1	70.211	GFL09-2M □□□100C32	110
	20	1370	0.9		25	1128	1.1	71.200	GFL07-2M □□□100C32	110
	20	1370	2.1		25	1128	2.6	71.200	GFL11-2M □□□100C32	110
	20	1386	1.1		24	1142	1.3	73.173	GFL09-3M □□□100C32	126
	20	1389	2.1		24	1144	2.5	73.335	GFL11-3M □□□100C32	126
	18	1515	1.1		22	1247	1.3	78.750	GFL09-2M □□□100C32	110
	18	1536	1.7		22	1265	2.1	79.875	GFL11-2M □□□100C32	110
	18	1562	1.1		21	1286	1.3	82.465	GFL09-3M □□□100C32	126
	18	1566	2.1		21	1289	2.5	82.631	GFL11-3M □□□100C32	126
	16	1707	1.0		20	1406	1.3	88.750	GFL09-2M □□□100C32	110
	16	1731	1.7		19	1425	2.1	90.000	GFL11-2M □□□100C32	110
	16	1768	1.0		19	1456	1.2	93.333	GFL09-3M □□□100C32	126
	15	1772	1.8		19	1459	2.2	93.540	GFL11-3M □□□100C32	126
	14	1987	3.0		17	1636	3.6	104.889	GFL14-3M □□□100C32	126
	14	1993	1.0		17	1641	1.2	105.185	GFL09-3M □□□100C32	126
	14	1997	1.8		17	1644	2.2	105.397	GFL11-3M □□□100C32	126
	13	2162	3.0		15	1780	3.6	114.126	GFL14-3M □□□100C32	126
	13	2166	0.9		15	1784	1.0	114.333	GFL09-3M □□□100C32	126
	13	2171	1.6		15	1788	2.0	114.586	GFL11-3M □□□100C32	126
	11	2436	3.0		14	2006	3.6	128.593	GFL14-3M □□□100C32	126
	11	2441	0.9		14	2010	1.0	128.852	GFL09-3M □□□100C32	126
	11	2446	1.6		14	2014	2.0	129.111	GFL11-3M □□□100C32	126
	9.7	2826	1.4		12	2327	1.7	149.144	GFL11-3M □□□100C32	126
	9.3	2958	2.5		11	2436	3.1	156.148	GFL14-3M □□□100C32	126
	8.6	3184	1.4		10	2622	1.7	168.049	GFL11-3M □□□100C32	126
	8.5	3222	2.6		10	2653	3.2	170.074	GFL14-3M □□□100C32	126

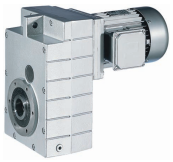

Selection tables

50 Hz, 60 Hz: P_N = 3.0 kW

n_N	1445 r/min				1755 r/min			i		
f_N	50 Hz				60 Hz					
	n_2 [r/min]	M_2 [Nm]	c		n_2 [r/min]	M_2 [Nm]	c			
	7.9	3463	1.2		9.6	2852	1.5	182.792	GFL11-3M □□□100C32	126
	7.2	3829	2.0		8.6	3152	2.5	202.074	GFL14-3M □□□100C32	126
	7.0	3902	1.2		8.5	3213	1.5	205.963	GFL11-3M □□□100C32	126
	6.4	4256	1.1		7.8	3504	1.3	224.636	GFL11-3M □□□100C32	126
	6.4	4256	2.1		7.8	3504	2.5	224.636	GFL14-3M □□□100C32	126
	5.7	4796	1.1		6.9	3949	1.3	253.111	GFL11-3M □□□100C32	126
	5.7	4796	2.1		6.9	3949	2.5	253.111	GFL14-3M □□□100C32	126
	5.4	5064	1.0		6.5	4169	1.2	267.259	GFL11-3M □□□100C32	126
	5.3	5187	1.9		6.4	4271	2.3	273.778	GFL14-3M □□□100C32	126
	4.4	6206	0.9		5.3	5110	1.1	327.556	GFL11-3M □□□100C32	126
	4.4	6299	1.7		5.3	5186	2.0	332.444	GFL14-3M □□□100C32	126
	4.1	6685	1.6		5.0	5504	1.9	352.811	GFL14-3M □□□100C32	126
	3.6	7532	1.5		4.4	6202	1.9	397.533	GFL14-3M □□□100C32	126
	3.4	8151	1.3		4.1	6711	1.6	430.222	GFL14-3M □□□100C32	126
	2.8	9893	1.1		3.3	8145	1.3	522.133	GFL14-3M □□□100C32	126
	2.6	10655	0.8		3.1	8773	1.0	562.391	GFL14-3M □□□100C32	126
	2.3	12006	0.8		2.8	9885	1.0	633.680	GFL14-3M □□□100C32	126

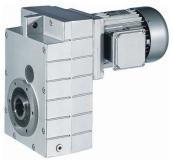

Selection tables

50 Hz, 60 Hz: P_N = 4.0 kW

n_N	1455 r/min				1760 r/min			i		
f_N	50 Hz				60 Hz					
	n_2 [r/min]	M_2 [Nm]	c		n_2 [r/min]	M_2 [Nm]	c			
	396	94	3.4		478	77	3.9	3.675	GFL06-2M □□□112C22	110
	313	118	4.2		378	98	4.8	4.643	GFL07-2M □□□112C22	110
	279	133	3.2		337	110	3.7	5.211	GFL06-2M □□□112C22	110
	253	146	3.0		305	121	3.5	5.750	GFL06-2M □□□112C22	110
	226	164	2.1		272	136	2.5	6.450	GFL06-2M □□□112C22	110
	204	182	2.4		246	150	2.7	7.147	GFL06-2M □□□112C22	110
	173	214	2.8		209	177	3.2	8.400	GFL06-2M □□□112C22	110
	154	241	2.4		186	199	2.8	9.463	GFL06-2M □□□112C22	110
	144	257	1.8		174	213	2.0	10.092	GFL06-2M □□□112C22	110
	126	293	2.2		152	243	2.5	11.520	GFL06-2M □□□112C22	110
	112	331	1.8		135	273	2.1	12.978	GFL06-2M □□□112C22	110
	103	362	3.2		124	299	3.6	14.200	GFL07-2M □□□112C22	110
	99	376	1.7		119	310	2.0	14.743	GFL06-2M □□□112C22	110
	92	405	2.9		110	335	3.3	15.904	GFL07-2M □□□112C22	110
	90	411	1.6		109	340	1.8	16.128	GFL06-2M □□□112C22	110
	81	456	2.6		98	377	3.0	17.920	GFL07-2M □□□112C22	110
	80	463	1.3		97	383	1.5	18.169	GFL06-2M □□□112C22	110
	72	517	2.4		87	427	2.8	20.286	GFL07-2M □□□112C22	110
	71	524	1.2		85	433	1.4	20.571	GFL06-2M □□□112C22	110
	64	582	2.1		77	481	2.4	22.857	GFL07-2M □□□112C22	110
	63	590	1.0		76	488	1.2	23.175	GFL06-2M □□□112C22	110
	59	633	2.1		71	523	2.6	24.850	GFL07-2M □□□112C22	110
	58	642	1.0		70	531	1.2	25.200	GFL06-2M □□□112C22	110
	52	713	1.7		63	590	2.1	28.000	GFL07-2M □□□112C22	110
	51	723	0.8		62	598	1.0	28.389	GFL06-2M □□□112C22	110
	45	824	1.7		54	681	2.0	32.344	GFL07-2M □□□112C22	110
	45	832	2.6		54	688	3.1	32.667	GFL09-2M □□□112C22	110
	40	928	1.3		48	767	1.6	36.444	GFL07-2M □□□112C22	110
	40	938	2.6		48	775	3.1	36.815	GFL09-2M □□□112C22	110
	37	1010	1.4		44	835	1.7	39.642	GFL07-2M □□□112C22	110
	37	1010	2.2		44	835	2.6	39.667	GFL09-2M □□□112C22	110
	36	1025	2.7		44	847	3.3	40.233	GFL11-2M □□□112C22	110
	33	1138	1.1		39	941	1.3	44.667	GFL07-2M □□□112C22	110
	33	1139	2.2		39	941	2.6	44.704	GFL09-2M □□□112C22	110
	32	1155	2.7		39	955	3.3	45.333	GFL11-2M □□□112C22	110
	28	1307	1.8		34	1081	2.1	51.333	GFL09-2M □□□112C22	110
	28	1326	2.2		34	1096	2.6	52.067	GFL11-2M □□□112C22	110
	28	1326	2.7		34	1096	3.3	52.067	GFL14-2M □□□112C22	110
	25	1474	1.8		30	1218	2.1	57.852	GFL09-2M □□□112C22	110
	25	1494	2.2		30	1235	2.6	58.667	GFL11-2M □□□112C22	110

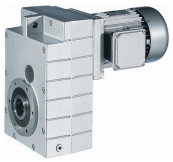

Selection tables

50 Hz, 60 Hz: P_N = 4.0 kW

n_N	1455 r/min				1760 r/min			i		
f_N	50 Hz				60 Hz					
	n_2 [r/min]	M_2 [Nm]	c		n_2 [r/min]	M_2 [Nm]	c			
	25	1494	2.7		30	1235	3.3	58.667	GFL14-2M □□□112C22	110
	23	1587	1.5		28	1312	1.8	62.300	GFL09-2M □□□112C22	110
	23	1609	1.8		28	1331	2.2	63.190	GFL11-2M □□□112C22	110
	23	1609	2.3		28	1331	2.7	63.190	GFL14-2M □□□112C22	110
	23	1589	1.0		28	1313	1.1	63.326	GFL09-3M □□□112C22	126
	22	1638	1.8		27	1355	2.1	65.306	GFL11-3M □□□112C22	126
	21	1724	3.1		26	1425	3.8	68.708	GFL14-3M □□□112C22	126
	21	1788	1.4		25	1478	1.7	70.211	GFL09-2M □□□112C22	110
	20	1814	1.8		25	1499	2.2	71.200	GFL11-2M □□□112C22	110
	20	1814	2.3		25	1499	2.7	71.200	GFL14-2M □□□112C22	110
	20	1836	0.8		24	1518	1.0	73.173	GFL09-3M □□□112C22	126
	20	1840	1.6		24	1521	1.9	73.335	GFL11-3M □□□112C22	126
	19	1942	3.1		23	1606	3.8	77.418	GFL14-3M □□□112C22	126
	18	2034	1.5		22	1682	1.8	79.875	GFL11-2M □□□112C22	110
	18	2034	1.8		22	1682	2.2	79.875	GFL14-2M □□□112C22	110
	18	2069	0.8		21	1710	1.0	82.465	GFL09-3M □□□112C22	126
	18	2073	1.6		21	1714	1.9	82.631	GFL11-3M □□□112C22	126
	17	2133	2.9		21	1764	3.6	85.037	GFL14-3M □□□112C22	126
	16	2292	1.5		20	1895	1.8	90.000	GFL11-2M □□□112C22	110
	16	2292	1.8		20	1895	2.2	90.000	GFL14-2M □□□112C22	110
	16	2347	1.4		19	1940	1.7	93.540	GFL11-3M □□□112C22	126
	14	2632	2.6		17	2175	3.1	104.889	GFL14-3M □□□112C22	126
	14	2644	1.4		17	2186	1.7	105.397	GFL11-3M □□□112C22	126
	13	2863	2.3		15	2367	2.8	114.126	GFL14-3M □□□112C22	126
	13	2875	1.2		15	2377	1.5	114.586	GFL11-3M □□□112C22	126
	11	3226	2.3		14	2667	2.8	128.593	GFL14-3M □□□112C22	126
	11	3239	1.2		14	2678	1.5	129.111	GFL11-3M □□□112C22	126
	11	3434	2.1		13	2839	2.6	136.889	GFL14-3M □□□112C22	126
	9.8	3742	1.0		12	3093	1.3	149.144	GFL11-3M □□□112C22	126
	9.3	3918	2.1		11	3239	2.5	156.148	GFL14-3M □□□112C22	126
	8.7	4216	1.0		10	3485	1.3	168.049	GFL11-3M □□□112C22	126
	8.6	4267	2.0		10	3527	2.4	170.074	GFL14-3M □□□112C22	126
	8.0	4586	0.9		9.6	3791	1.1	182.792	GFL11-3M □□□112C22	126
	7.2	5070	1.8		8.7	4191	2.1	202.074	GFL14-3M □□□112C22	126
	7.1	5167	0.9		8.5	4272	1.1	205.963	GFL11-3M □□□112C22	126
	6.5	5636	0.8		7.8	4659	1.0	224.636	GFL11-3M □□□112C22	126
	6.5	5636	1.6		7.8	4659	1.9	224.636	GFL14-3M □□□112C22	126
	5.8	6350	0.8		6.9	5250	1.0	253.111	GFL11-3M □□□112C22	126
	5.8	6350	1.6		6.9	5250	1.9	253.111	GFL14-3M □□□112C22	126
	5.3	6869	1.4		6.4	5678	1.7	273.778	GFL14-3M □□□112C22	126

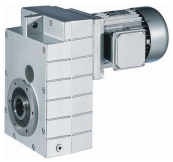

Selection tables

50 Hz, 60 Hz: P_N = 4.0 kW

n_N	1455 r/min				1760 r/min			i		
f_N	50 Hz				60 Hz					
	n_2 [r/min]	M_2 [Nm]	c		n_2 [r/min]	M_2 [Nm]	c			
	4.4	8341	1.3		5.3	6895	1.5	332.444	GFL14-3M □□□112C22	126
	4.1	8852	1.2		5.0	7318	1.4	352.811	GFL14-3M □□□112C22	126
	3.7	9974	1.2		4.4	8245	1.4	397.533	GFL14-3M □□□112C22	126
	3.4	10794	1.0		4.1	8923	1.2	430.222	GFL14-3M □□□112C22	126
	2.8	13100	0.8		3.4	10830	1.0	522.133	GFL14-3M □□□112C22	126

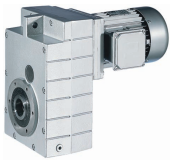

Selection tables

50 Hz, 60 Hz: P_N = 5.5 kW

n_N	1470 r/min				1775 r/min			i		
f_N	50 Hz				60 Hz					
	n_2 [r/min]	M_2 [Nm]	c		n_2 [r/min]	M_2 [Nm]	c			
	400	127	2.7		482	106	3.0	3.675	GFL06-2M□□□132C12	110
	317	161	4.1		381	133	4.6	4.643	GFL07-2M □□□132C12	110
	282	181	2.3		340	150	2.7	5.211	GFL06-2M□□□132C12	110
	256	199	2.2		308	165	2.5	5.750	GFL06-2M□□□132C12	110
	230	222	3.0		277	184	3.4	6.400	GFL07-2M □□□132C12	110
	228	224	1.6		274	185	1.8	6.450	GFL06-2M□□□132C12	110
	206	248	1.7		248	205	2.0	7.147	GFL06-2M□□□132C12	110
	175	291	2.1		211	241	2.4	8.400	GFL06-2M□□□132C12	110
	157	325	3.1		189	269	3.5	9.379	GFL07-2M □□□132C12	110
	155	328	1.8		187	272	2.0	9.463	GFL06-2M□□□132C12	110
	151	337	2.9		182	279	3.3	9.714	GFL07-2M □□□132C12	110
	146	350	1.3		175	290	1.5	10.092	GFL06-2M□□□132C12	110
	128	399	1.6		154	331	1.8	11.520	GFL06-2M□□□132C12	110
	127	400	2.7		154	331	3.1	11.537	GFL07-2M □□□132C12	110
	113	450	1.3		136	373	1.5	12.978	GFL06-2M□□□132C12	110
	113	451	2.4		136	373	2.8	13.000	GFL07-2M □□□132C12	110
	104	492	2.3		125	408	2.7	14.200	GFL07-2M □□□132C12	110
	100	511	1.3		120	423	1.4	14.743	GFL06-2M□□□132C12	110
	92	551	2.1		111	457	2.4	15.904	GFL07-2M □□□132C12	110
	91	559	1.1		110	463	1.3	16.128	GFL06-2M□□□132C12	110
	82	621	1.9		99	514	2.2	17.920	GFL07-2M □□□132C12	110
	81	630	1.0		97	522	1.1	18.169	GFL06-2M□□□132C12	110
	73	703	1.8		87	582	2.0	20.286	GFL07-2M □□□132C12	110
	72	713	0.9		86	591	1.0	20.571	GFL06-2M□□□132C12	110
	64	792	1.6		77	656	1.8	22.857	GFL07-2M □□□132C12	110
	59	861	1.6		71	713	1.9	24.850	GFL07-2M □□□132C12	110
	54	942	2.9		65	780	3.5	27.173	GFL09-2M □□□132C12	110
	53	971	1.3		63	804	1.5	28.000	GFL07-2M □□□132C12	110
	45	1121	1.2		55	929	1.5	32.344	GFL07-2M □□□132C12	110
	45	1132	2.6		54	938	3.2	32.667	GFL09-2M □□□132C12	110
	40	1263	1.0		49	1046	1.2	36.444	GFL07-2M □□□132C12	110
	40	1276	2.4		48	1057	2.9	36.815	GFL09-2M □□□132C12	110
	37	1375	2.3		45	1139	2.7	39.667	GFL09-2M □□□132C12	110
	33	1550	2.0		40	1283	2.4	44.704	GFL09-2M □□□132C12	110
	32	1571	3.1		39	1301	3.8	45.333	GFL11-2M □□□132C12	110
	28	1805	2.9		34	1495	3.5	52.067	GFL11-2M □□□132C12	110
	25	2034	2.6		30	1684	3.1	58.667	GFL11-2M □□□132C12	110
	23	2190	2.5		28	1814	3.1	63.190	GFL11-2M □□□132C12	110
	23	2195	2.6		28	1818	3.1	64.296	GFL14-3M □□□132C12	126
	23	2230	1.3		27	1847	1.6	65.306	GFL11-3M □□□132C12	126

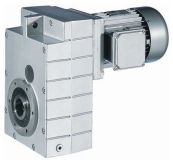

Selection tables

50 Hz, 60 Hz: P_N = 5.5 kW

n_N	1470 r/min				1775 r/min			i		
f_N	50 Hz				60 Hz					
	n_2 [r/min]	M_2 [Nm]	c		n_2 [r/min]	M_2 [Nm]	c			
	21	2346	2.3		26	1943	2.8	68.708	GFL14-3M □□□132C12	126
	21	2468	2.3		25	2044	2.7	71.200	GFL11-2M □□□132C12	110
	20	2504	1.1		24	2074	1.4	73.335	GFL11-3M □□□132C12	126
	19	2643	2.3		23	2189	2.8	77.418	GFL14-3M □□□132C12	126
	18	2769	2.5		22	2293	3.1	79.875	GFL14-2M □□□132C12	110
	18	2821	1.1		21	2337	1.4	82.631	GFL11-3M □□□132C12	126
	17	2904	2.2		21	2405	2.6	85.037	GFL14-3M □□□132C12	126
	16	3120	2.5		20	2584	3.1	90.000	GFL14-2M □□□132C12	110
	16	3194	1.0		19	2645	1.2	93.540	GFL11-3M □□□132C12	126
	14	3581	1.9		17	2966	2.3	104.889	GFL14-3M □□□132C12	126
	14	3599	1.0		17	2980	1.2	105.397	GFL11-3M □□□132C12	126
	13	3897	1.7		16	3227	2.1	114.126	GFL14-3M □□□132C12	126
	13	3913	0.9		15	3240	1.1	114.586	GFL11-3M □□□132C12	126
	11	4391	1.7		14	3636	2.1	128.593	GFL14-3M □□□132C12	126
	11	4408	0.9		14	3651	1.1	129.111	GFL11-3M □□□132C12	126
	11	4674	1.6		13	3871	1.9	136.889	GFL14-3M □□□132C12	126
	9.4	5332	1.5		11	4416	1.9	156.148	GFL14-3M □□□132C12	126
	8.6	5807	1.4		10	4809	1.7	170.074	GFL14-3M □□□132C12	126
	6.5	7670	1.1		7.9	6352	1.4	224.636	GFL14-3M □□□132C12	126
	5.8	8642	1.1		7.0	7157	1.4	253.111	GFL14-3M □□□132C12	126
	5.4	9348	1.0		6.5	7742	1.3	273.778	GFL14-3M □□□132C12	126
	4.4	11351	0.9		5.3	9401	1.1	332.444	GFL14-3M □□□132C12	126

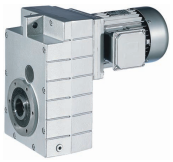

Selection tables

50 Hz, 60 Hz: P_N = 7.5 kW

n_N	1460 r/min				1765 r/min			i		
f_N	50 Hz				60 Hz					
	n_2 [r/min]	M_2 [Nm]	c		n_2 [r/min]	M_2 [Nm]	c			
	397	175	1.9		479	145	2.2	3.675	GFL06-2M□□□132C22	110
	315	221	3.0		379	183	3.4	4.643	GFL07-2M □□□132C22	110
	280	248	1.7		338	205	2.0	5.211	GFL06-2M□□□132C22	110
	254	274	1.6		306	226	1.8	5.750	GFL06-2M□□□132C22	110
	228	305	2.2		275	252	2.5	6.400	GFL07-2M □□□132C22	110
	226	307	1.1		273	254	1.3	6.450	GFL06-2M□□□132C22	110
	204	340	1.3		246	281	1.5	7.147	GFL06-2M□□□132C22	110
	204	340	2.7		246	281	3.1	7.150	GFL07-2M □□□132C22	110
	175	396	2.5		211	328	2.9	8.324	GFL07-2M □□□132C22	110
	174	400	1.5		210	331	1.7	8.400	GFL06-2M□□□132C22	110
	156	446	2.2		188	369	2.6	9.379	GFL07-2M □□□132C22	110
	154	450	1.3		186	373	1.5	9.463	GFL06-2M□□□132C22	110
	150	462	2.1		181	382	2.4	9.714	GFL07-2M □□□132C22	110
	145	480	1.0		174	397	1.1	10.092	GFL06-2M□□□132C22	110
	127	548	1.2		153	454	1.3	11.520	GFL06-2M□□□132C22	110
	127	549	2.0		153	454	2.3	11.537	GFL07-2M □□□132C22	110
	113	618	1.0		136	511	1.1	12.978	GFL06-2M□□□132C22	110
	112	619	1.8		135	512	2.0	13.000	GFL07-2M □□□132C22	110
	103	676	1.7		124	559	1.9	14.200	GFL07-2M □□□132C22	110
	99	702	0.9		119	580	1.0	14.743	GFL06-2M□□□132C22	110
	92	757	1.6		111	626	1.8	15.904	GFL07-2M □□□132C22	110
	91	768	0.8		109	635	1.0	16.128	GFL06-2M□□□132C22	110
	89	777	3.2		108	643	3.6	16.333	GFL09-2M □□□132C22	110
	82	853	1.4		98	706	1.6	17.920	GFL07-2M □□□132C22	110
	79	876	2.8		96	725	3.2	18.407	GFL09-2M □□□132C22	110
	74	936	2.7		90	774	3.1	19.667	GFL09-2M □□□132C22	110
	72	965	1.3		87	799	1.5	20.286	GFL07-2M □□□132C22	110
	66	1055	2.5		79	873	2.8	22.164	GFL09-2M □□□132C22	110
	64	1088	1.1		77	900	1.3	22.857	GFL07-2M □□□132C22	110
	61	1148	2.4		73	949	2.9	24.111	GFL09-2M □□□132C22	110
	59	1183	1.1		71	978	1.4	24.850	GFL07-2M □□□132C22	110
	54	1293	2.1		65	1070	2.6	27.173	GFL09-2M □□□132C22	110
	52	1333	0.9		63	1102	1.1	28.000	GFL07-2M □□□132C22	110
	52	1333	3.2		63	1102	3.9	28.000	GFL11-2M □□□132C22	110
	45	1539	0.9		55	1273	1.1	32.344	GFL07-2M □□□132C22	110
	45	1555	1.9		54	1286	2.3	32.667	GFL09-2M □□□132C22	110
	45	1558	3.0		54	1289	3.6	32.739	GFL11-2M □□□132C22	110
	40	1752	1.7		48	1449	2.1	36.815	GFL09-2M □□□132C22	110
	40	1756	2.6		48	1452	3.2	36.889	GFL11-2M □□□132C22	110
	37	1888	1.6		44	1562	2.0	39.667	GFL09-2M □□□132C22	110

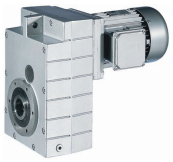

Selection tables

50 Hz, 60 Hz: P_N = 7.5 kW

n_N	1460 r/min				1765 r/min			i		
f_N	50 Hz				60 Hz					
	n_2 [r/min]	M_2 [Nm]	c		n_2 [r/min]	M_2 [Nm]	c			
	36	1915	2.5		44	1584	3.1	40.233	GFL11-2M □□□132C22	110
	33	2128	1.4		39	1760	1.7	44.704	GFL09-2M □□□132C22	110
	32	2158	2.3		39	1785	2.7	45.333	GFL11-2M □□□132C22	110
	28	2478	2.1		34	2050	2.6	52.067	GFL11-2M □□□132C22	110
	28	2478	3.1		34	2050	3.7	52.067	GFL14-2M □□□132C22	110
	25	2792	1.9		30	2310	2.3	58.667	GFL11-2M □□□132C22	110
	25	2792	3.1		30	2310	3.7	58.667	GFL14-2M □□□132C22	110
	23	3007	1.8		28	2488	2.2	63.190	GFL11-2M □□□132C22	110
	23	3007	2.6		28	2488	3.1	63.190	GFL14-2M □□□132C22	110
	23	3014	1.9		27	2493	2.2	64.296	GFL14-3M □□□132C22	126
	22	3062	0.9		27	2533	1.1	65.306	GFL11-3M □□□132C22	126
	21	3221	1.7		26	2664	2.0	68.708	GFL14-3M □□□132C22	126
	21	3389	1.6		25	2803	2.0	71.200	GFL11-2M □□□132C22	110
	21	3389	2.6		25	2803	3.1	71.200	GFL14-2M □□□132C22	110
	20	3438	0.8		24	2844	1.0	73.335	GFL11-3M □□□132C22	126
	19	3629	1.7		23	3002	2.0	77.418	GFL14-3M □□□132C22	126
	18	3802	1.8		22	3145	2.2	79.875	GFL14-2M □□□132C22	110
	18	3874	0.8		21	3204	1.0	82.631	GFL11-3M □□□132C22	126
	17	3987	1.6		21	3298	1.9	85.037	GFL14-3M □□□132C22	126
	16	4283	1.8		20	3543	2.2	90.000	GFL14-2M □□□132C22	110
	14	4917	1.4		17	4067	1.7	104.889	GFL14-3M □□□132C22	126
	13	5350	1.3		15	4426	1.5	114.126	GFL14-3M □□□132C22	126
	11	6028	1.3		14	4987	1.5	128.593	GFL14-3M □□□132C22	126
	11	6417	1.1		13	5308	1.4	136.889	GFL14-3M □□□132C22	126
	9.4	7320	1.1		11	6055	1.4	156.148	GFL14-3M □□□132C22	126
	8.6	7973	1.1		10	6595	1.3	170.074	GFL14-3M □□□132C22	126
	6.5	10531	0.8		7.8	8711	1.0	224.636	GFL14-3M □□□132C22	126
	5.8	11866	0.8		7.0	9815	1.0	253.111	GFL14-3M □□□132C22	126

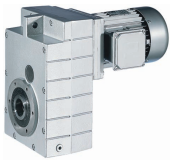

Selection tables

50 Hz, 60 Hz: P_N = 11.0 kW

n_N	1470 r/min				1775 r/min			i		
f_N	50 Hz				60 Hz					
	n_2 [r/min]	M_2 [Nm]	c		n_2 [r/min]	M_2 [Nm]	c			
	439	232	2.8		528	192	3.1	3.350	GFL07-2M □□□160C22	110
	317	322	2.0		381	267	2.3	4.643	GFL07-2M □□□160C22	110
	285	358	2.4		343	296	2.7	5.159	GFL07-2M □□□160C22	110
	258	395	2.3		311	327	2.6	5.695	GFL07-2M □□□160C22	110
	230	444	1.5		277	367	1.7	6.400	GFL07-2M □□□160C22	110
	206	496	1.9		248	411	2.1	7.150	GFL07-2M □□□160C22	110
	177	577	1.7		213	478	2.0	8.324	GFL07-2M □□□160C22	110
	157	650	1.5		189	539	1.8	9.379	GFL07-2M □□□160C22	110
	151	673	1.4		182	558	1.6	9.714	GFL07-2M □□□160C22	110
	132	774	3.0		159	641	3.4	11.167	GFL09-2M □□□160C22	110
	127	800	1.4		154	662	1.5	11.537	GFL07-2M □□□160C22	110
	119	853	2.6		144	707	3.0	12.307	GFL09-2M □□□160C22	110
	113	901	1.2		136	746	1.4	13.000	GFL07-2M □□□160C22	110
	104	984	1.2		125	815	1.3	14.200	GFL07-2M □□□160C22	110
	103	994	2.4		124	823	2.7	14.333	GFL09-2M □□□160C22	110
	92	1103	1.1		111	913	1.2	15.904	GFL07-2M □□□160C22	110
	90	1132	2.2		108	938	2.5	16.333	GFL09-2M □□□160C22	110
	82	1242	1.0		99	1029	1.1	17.920	GFL07-2M □□□160C22	110
	82	1242	3.0		99	1029	3.5	17.920	GFL11-2M □□□160C22	110
	80	1276	1.9		96	1057	2.2	18.407	GFL09-2M □□□160C22	110
	75	1363	1.9		90	1129	2.1	19.667	GFL09-2M □□□160C22	110
	73	1406	2.9		87	1165	3.3	20.286	GFL11-2M □□□160C22	110
	66	1537	1.7		80	1273	1.9	22.164	GFL09-2M □□□160C22	110
	64	1585	2.5		77	1312	2.9	22.857	GFL11-2M □□□160C22	110
	61	1672	1.6		73	1384	2.0	24.111	GFL09-2M □□□160C22	110
	59	1723	2.5		71	1427	3.0	24.850	GFL11-2M □□□160C22	110
	54	1884	1.5		65	1560	1.8	27.173	GFL09-2M □□□160C22	110
	53	1941	2.2		63	1608	2.7	28.000	GFL11-2M □□□160C22	110
	45	2270	2.0		54	1880	2.4	32.739	GFL11-2M □□□160C22	110
	40	2557	1.8		48	2118	2.2	36.889	GFL11-2M □□□160C22	110
	37	2789	1.8		44	2310	2.1	40.233	GFL11-2M □□□160C22	110
	32	3143	1.6		39	2603	1.9	45.333	GFL11-2M □□□160C22	110
	28	3610	2.8		34	2989	3.4	52.067	GFL14-2M □□□160C22	110
	25	4067	2.8		30	3368	3.4	58.667	GFL14-2M □□□160C22	110
	23	4381	2.3		28	3628	2.7	63.190	GFL14-2M □□□160C22	110
	23	4391	1.3		28	3636	1.5	64.296	GFL14-3M □□□160C22	126
	21	4692	1.2		26	3886	1.4	68.708	GFL14-3M □□□160C22	126
	21	4936	2.2		25	4088	2.6	71.200	GFL14-2M □□□160C22	110
	19	5287	1.2		23	4378	1.4	77.418	GFL14-3M □□□160C22	126
	17	5807	1.1		21	4809	1.3	85.037	GFL14-3M □□□160C22	126

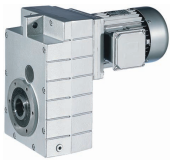

Selection tables

50 Hz, 60 Hz: P_N = 15.0 kW

n_N	1470 r/min				1775 r/min			i		
f_N	50 Hz				60 Hz					
	n_2 [r/min]	M_2 [Nm]	c		n_2 [r/min]	M_2 [Nm]	c			
	439	317	2.0		528	262	2.3	3.350	GFL07-2M □□□160C32	110
	317	439	1.5		381	364	1.7	4.643	GFL07-2M □□□160C32	110
	285	488	1.7		343	404	2.0	5.159	GFL07-2M □□□160C32	110
	258	538	1.7		311	446	1.9	5.695	GFL07-2M □□□160C32	110
	230	605	1.1		277	501	1.2	6.400	GFL07-2M □□□160C32	110
	214	649	3.2		258	537	3.7	6.864	GFL09-2M □□□160C32	110
	206	676	1.4		248	560	1.6	7.150	GFL07-2M □□□160C32	110
	197	706	3.1		237	585	3.5	7.466	GFL09-2M □□□160C32	110
	177	787	1.3		213	652	1.4	8.324	GFL07-2M □□□160C32	110
	163	852	2.6		197	705	3.0	9.010	GFL09-2M □□□160C32	110
	157	887	1.1		189	734	1.3	9.379	GFL07-2M □□□160C32	110
	151	918	1.1		182	761	1.2	9.714	GFL07-2M □□□160C32	110
	150	926	2.5		181	767	2.8	9.799	GFL09-2M □□□160C32	110
	132	1056	2.2		159	874	2.5	11.167	GFL09-2M □□□160C32	110
	127	1091	1.0		154	903	1.1	11.537	GFL07-2M □□□160C32	110
	119	1163	1.9		144	964	2.2	12.307	GFL09-2M □□□160C32	110
	118	1180	2.9		142	977	3.4	12.480	GFL11-2M □□□160C32	110
	113	1229	0.9		136	1018	1.0	13.000	GFL07-2M □□□160C32	110
	104	1342	0.9		125	1112	1.0	14.200	GFL07-2M □□□160C32	110
	103	1355	1.8		124	1122	2.0	14.333	GFL09-2M □□□160C32	110
	101	1374	2.7		122	1138	3.1	14.538	GFL11-2M □□□160C32	110
	92	1504	2.5		111	1245	2.9	15.904	GFL11-2M □□□160C32	110
	90	1544	1.6		108	1279	1.8	16.333	GFL09-2M □□□160C32	110
	82	1694	2.2		99	1403	2.6	17.920	GFL11-2M □□□160C32	110
	80	1740	1.4		96	1441	1.6	18.407	GFL09-2M □□□160C32	110
	75	1859	1.4		90	1540	1.6	19.667	GFL09-2M □□□160C32	110
	73	1918	2.1		87	1588	2.4	20.286	GFL11-2M □□□160C32	110
	66	2095	1.2		80	1735	1.4	22.164	GFL09-2M □□□160C32	110
	64	2161	1.9		77	1790	2.1	22.857	GFL11-2M □□□160C32	110
	61	2279	1.2		73	1888	1.4	24.111	GFL09-2M □□□160C32	110
	59	2349	1.8		71	1946	2.2	24.850	GFL11-2M □□□160C32	110
	54	2569	1.1		65	2128	1.3	27.173	GFL09-2M □□□160C32	110
	53	2647	1.6		63	2192	1.9	28.000	GFL11-2M □□□160C32	110
	45	3058	3.1		55	2532	3.7	32.344	GFL14-2M □□□160C32	110
	45	3095	1.5		54	2563	1.8	32.739	GFL11-2M □□□160C32	110
	40	3445	3.1		49	2853	3.7	36.444	GFL14-2M □□□160C32	110
	40	3487	1.3		48	2888	1.6	36.889	GFL11-2M □□□160C32	110
	37	3748	2.6		45	3104	3.1	39.642	GFL14-2M □□□160C32	110
	37	3804	1.3		44	3150	1.5	40.233	GFL11-2M □□□160C32	110
	33	4223	2.6		40	3497	3.1	44.667	GFL14-2M □□□160C32	110

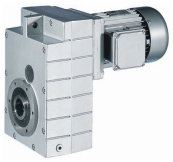

Selection tables

50 Hz, 60 Hz: P_N = 15.0 kW

n_N	1470 r/min				1775 r/min			i		
f_N	50 Hz				60 Hz					
	n_2 [r/min]	M_2 [Nm]	c		n_2 [r/min]	M_2 [Nm]	c			
	32	4286	1.1		39	3549	1.4	45.333	GFL11-2M □□□160C32	110
	28	4922	2.0		34	4077	2.5	52.067	GFL14-2M □□□160C32	110
	25	5546	2.0		30	4593	2.5	58.667	GFL14-2M □□□160C32	110
	23	5974	1.7		28	4947	2.0	63.190	GFL14-2M □□□160C32	110
	23	5987	0.9		28	4959	1.1	64.296	GFL14-3M □□□160C32	126
	21	6398	0.8		26	5299	1.0	68.708	GFL14-3M □□□160C32	126
	21	6731	1.6		25	5575	1.9	71.200	GFL14-2M □□□160C32	110
	19	7209	0.8		23	5971	1.0	77.418	GFL14-3M □□□160C32	126

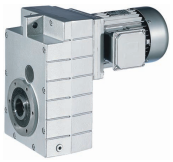

Selection tables

50 Hz, 60 Hz: P_N = 18.5 kW

n_N	1475 r/min				1775 r/min			i		
f_N	50 Hz				60 Hz					
	n_2 [r/min]	M_2 [Nm]	c		n_2 [r/min]	M_2 [Nm]	c			
	215	798	2.6		259	663	3.0	6.864	GFL09-2M □□□180C12	110
	198	868	2.5		238	721	2.8	7.466	GFL09-2M □□□180C12	110
	164	1047	2.1		197	870	2.4	9.010	GFL09-2M □□□180C12	110
	151	1139	2.0		181	946	2.3	9.799	GFL09-2M □□□180C12	110
	138	1246	3.1		166	1035	3.5	10.720	GFL11-2M □□□180C12	110
	132	1298	1.8		159	1078	2.0	11.167	GFL09-2M □□□180C12	110
	120	1430	1.6		144	1188	1.8	12.307	GFL09-2M □□□180C12	110
	118	1450	2.4		142	1205	2.7	12.480	GFL11-2M □□□180C12	110
	103	1666	1.4		124	1384	1.6	14.333	GFL09-2M □□□180C12	110
	102	1689	2.2		122	1404	2.5	14.538	GFL11-2M □□□180C12	110
	93	1848	2.1		112	1536	2.3	15.904	GFL11-2M □□□180C12	110
	90	1898	1.3		109	1577	1.5	16.333	GFL09-2M □□□180C12	110
	82	2082	1.8		99	1730	2.1	17.920	GFL11-2M □□□180C12	110
	80	2139	1.2		96	1778	1.3	18.407	GFL09-2M □□□180C12	110
	75	2285	1.1		90	1899	1.3	19.667	GFL09-2M □□□180C12	110
	73	2357	1.7		88	1959	2.0	20.286	GFL11-2M □□□180C12	110
	67	2576	1.0		80	2140	1.2	22.164	GFL09-2M □□□180C12	110
	65	2656	1.5		78	2207	1.7	22.857	GFL11-2M □□□180C12	110
	61	2802	1.0		74	2328	1.2	24.111	GFL09-2M □□□180C12	110
	60	2842	3.1		73	2362	3.8	24.456	GFL14-2M □□□180C12	110
	59	2888	1.5		71	2400	1.8	24.850	GFL11-2M □□□180C12	110
	54	3158	0.9		65	2624	1.1	27.173	GFL09-2M □□□180C12	110
	54	3202	3.1		64	2661	3.8	27.556	GFL14-2M □□□180C12	110
	53	3254	1.3		63	2704	1.6	28.000	GFL11-2M □□□180C12	110
	46	3759	2.5		55	3123	3.0	32.344	GFL14-2M □□□180C12	110
	45	3804	1.2		54	3161	1.5	32.739	GFL11-2M □□□180C12	110
	41	4235	2.5		49	3519	3.0	36.444	GFL14-2M □□□180C12	110
	40	4287	1.1		48	3562	1.3	36.889	GFL11-2M □□□180C12	110
	37	4607	2.1		45	3828	2.6	39.642	GFL14-2M □□□180C12	110
	37	4675	1.0		44	3885	1.3	40.233	GFL11-2M □□□180C12	110
	33	5190	2.1		40	4313	2.6	44.667	GFL14-2M □□□180C12	110
	33	5268	0.9		39	4378	1.1	45.333	GFL11-2M □□□180C12	110
	28	6050	1.7		34	5028	2.0	52.067	GFL14-2M □□□180C12	110
	25	6817	1.7		30	5665	2.0	58.667	GFL14-2M □□□180C12	110
	23	7343	1.4		28	6102	1.6	63.190	GFL14-2M □□□180C12	110
	21	8274	1.3		25	6875	1.5	71.200	GFL14-2M □□□180C12	110

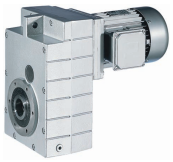

Selection tables

50 Hz, 60 Hz: P_N = 22.0 kW

n_N	1470 r/min				1775 r/min			i		
f_N	50 Hz				60 Hz					
	n_2 [r/min]	M_2 [Nm]	c		n_2 [r/min]	M_2 [Nm]	c			
	214	952	2.2		258	788	2.5	6.864	GFL09-2M □□□180C32	110
	214	952	3.1		258	788	3.5	6.864	GFL11-2M □□□180C32	110
	197	1035	2.1		237	857	2.4	7.466	GFL09-2M □□□180C32	110
	197	1035	3.1		237	857	3.5	7.466	GFL11-2M □□□180C32	110
	167	1220	3.2		201	1011	3.6	8.800	GFL14-2M □□□180C32	110
	163	1249	1.8		197	1035	2.0	9.010	GFL09-2M □□□180C32	110
	163	1249	2.9		197	1035	3.3	9.010	GFL11-2M □□□180C32	110
	154	1327	3.2		185	1099	3.6	9.571	GFL14-2M □□□180C32	110
	150	1359	1.7		181	1125	1.9	9.799	GFL09-2M □□□180C32	110
	150	1359	2.8		181	1125	3.2	9.799	GFL11-2M □□□180C32	110
	137	1486	2.6		165	1231	2.9	10.720	GFL11-2M □□□180C32	110
	132	1548	1.5		159	1282	1.7	11.167	GFL09-2M □□□180C32	110
	119	1706	1.3		144	1413	1.5	12.307	GFL09-2M □□□180C32	110
	118	1730	2.0		142	1433	2.3	12.480	GFL11-2M □□□180C32	110
	104	1969	3.2		125	1631	3.6	14.200	GFL14-2M □□□180C32	110
	103	1987	1.2		124	1646	1.4	14.333	GFL09-2M □□□180C32	110
	101	2016	1.8		122	1669	2.1	14.538	GFL11-2M □□□180C32	110
	94	2166	3.1		113	1794	3.5	15.620	GFL14-2M □□□180C32	110
	92	2205	1.7		111	1826	2.0	15.904	GFL11-2M □□□180C32	110
	90	2265	1.1		108	1876	1.2	16.333	GFL09-2M □□□180C32	110
	84	2440	3.1		101	2021	3.5	17.600	GFL14-2M □□□180C32	110
	82	2485	1.5		99	2058	1.7	17.920	GFL11-2M □□□180C32	110
	80	2552	1.0		96	2114	1.1	18.407	GFL09-2M □□□180C32	110
	75	2727	0.9		90	2258	1.1	19.667	GFL09-2M □□□180C32	110
	74	2766	2.9		89	2291	3.3	19.948	GFL14-2M □□□180C32	110
	73	2813	1.4		87	2329	1.6	20.286	GFL11-2M □□□180C32	110
	66	3073	0.8		80	2545	1.0	22.164	GFL09-2M □□□180C32	110
	65	3117	2.9		79	2581	3.3	22.476	GFL14-2M □□□180C32	110
	64	3169	1.3		77	2625	1.5	22.857	GFL11-2M □□□180C32	110
	61	3343	0.8		73	2769	1.0	24.111	GFL09-2M □□□180C32	110
	60	3391	2.6		72	2808	3.2	24.456	GFL14-2M □□□180C32	110
	59	3446	1.2		71	2854	1.5	24.850	GFL11-2M □□□180C32	110
	53	3821	2.6		64	3164	3.2	27.556	GFL14-2M □□□180C32	110
	53	3882	1.1		63	3215	1.3	28.000	GFL11-2M □□□180C32	110
	45	4485	2.1		55	3714	2.5	32.344	GFL14-2M □□□180C32	110
	45	4540	1.0		54	3760	1.2	32.739	GFL11-2M □□□180C32	110
	40	5053	2.1		49	4185	2.5	36.444	GFL14-2M □□□180C32	110
	40	5115	0.9		48	4236	1.1	36.889	GFL11-2M □□□180C32	110
	37	5497	1.8		45	4552	2.1	39.642	GFL14-2M □□□180C32	110
	37	5579	0.9		44	4620	1.1	40.233	GFL11-2M □□□180C32	110

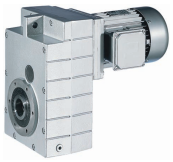

Selection tables

50 Hz, 60 Hz: P_N = 22.0 kW

n_N	1470 r/min				1775 r/min			i		
f_N	50 Hz				60 Hz					
	n_2 [r/min]	M_2 [Nm]	c		n_2 [r/min]	M_2 [Nm]	c			
	33	6193	1.8		40	5129	2.1	44.667	GFL14-2M □□□180C32	110
	28	7220	1.4		34	5979	1.7	52.067	GFL14-2M □□□180C32	110
	25	8135	1.4		30	6737	1.7	58.667	GFL14-2M □□□180C32	110
	23	8762	1.1		28	7256	1.4	63.190	GFL14-2M □□□180C32	110
	21	9873	1.1		25	8176	1.3	71.200	GFL14-2M □□□180C32	110

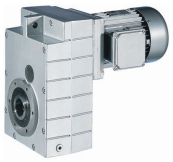

Selection tables

50 Hz, 60 Hz: P_N = 30.0 kW

n_N	1465 r/min				1770 r/min			i		
f_N	50 Hz				60 Hz					
	n_2 [r/min]	M_2 [Nm]	c		n_2 [r/min]	M_2 [Nm]	c			
	213	1302	1.6		257	1078	1.8	6.864	GFL09-2M □□□180C42	110
	213	1302	2.3		257	1078	2.6	6.864	GFL11-2M □□□180C42	110
	196	1416	1.5		236	1172	1.7	7.466	GFL09-2M □□□180C42	110
	196	1416	2.3		236	1172	2.6	7.466	GFL11-2M □□□180C42	110
	167	1670	2.3		201	1382	2.6	8.800	GFL14-2M □□□180C42	110
	163	1709	1.3		196	1415	1.5	9.010	GFL09-2M □□□180C42	110
	163	1709	2.1		196	1415	2.4	9.010	GFL11-2M □□□180C42	110
	153	1816	2.3		184	1503	2.6	9.571	GFL14-2M □□□180C42	110
	150	1859	1.2		180	1539	1.4	9.799	GFL09-2M □□□180C42	110
	150	1859	2.0		180	1539	2.3	9.799	GFL11-2M □□□180C42	110
	137	2034	1.9		165	1683	2.1	10.720	GFL11-2M □□□180C42	110
	131	2119	1.1		158	1754	1.2	11.167	GFL09-2M □□□180C42	110
	119	2335	1.0		143	1933	1.1	12.307	GFL09-2M □□□180C42	110
	117	2368	1.5		141	1960	1.7	12.480	GFL11-2M □□□180C42	110
	103	2694	2.3		124	2230	2.6	14.200	GFL14-2M □□□180C42	110
	102	2719	0.9		123	2251	1.0	14.333	GFL09-2M □□□180C42	110
	101	2758	1.3		121	2283	1.5	14.538	GFL11-2M □□□180C42	110
	94	2964	2.3		113	2453	2.6	15.620	GFL14-2M □□□180C42	110
	92	3017	1.3		111	2497	1.4	15.904	GFL11-2M □□□180C42	110
	83	3339	2.3		100	2764	2.6	17.600	GFL14-2M □□□180C42	110
	82	3400	1.1		99	2814	1.3	17.920	GFL11-2M □□□180C42	110
	73	3785	2.1		89	3132	2.4	19.948	GFL14-2M □□□180C42	110
	72	3849	1.1		87	3186	1.2	20.286	GFL11-2M □□□180C42	110
	65	4264	2.1		79	3530	2.4	22.476	GFL14-2M □□□180C42	110
	64	4337	0.9		77	3589	1.1	22.857	GFL11-2M □□□180C42	110
	60	4640	1.9		72	3840	2.3	24.456	GFL14-2M □□□180C42	110
	59	4715	0.9		71	3902	1.1	24.850	GFL11-2M □□□180C42	110
	53	5228	1.9		64	4327	2.3	27.556	GFL14-2M □□□180C42	110
	52	5312	0.8		63	4397	1.0	28.000	GFL11-2M □□□180C42	110
	45	6137	1.5		55	5079	1.8	32.344	GFL14-2M □□□180C42	110
	40	6914	1.5		48	5723	1.8	36.444	GFL14-2M □□□180C42	110
	37	7521	1.3		45	6225	1.6	39.642	GFL14-2M □□□180C42	110
	33	8474	1.3		40	7014	1.6	44.667	GFL14-2M □□□180C42	110
	28	9878	1.0		34	8176	1.2	52.067	GFL14-2M □□□180C42	110
	25	11131	1.0		30	9213	1.2	58.667	GFL14-2M □□□180C42	110
	23	11989	0.8		28	9923	1.0	63.190	GFL14-2M □□□180C42	110

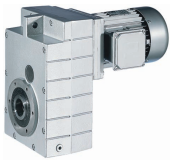

Selection tables

50 Hz, 60 Hz: P_N = 37.0 kW

n_N	1483 r/min				1787 r/min			i		
f_N	50 Hz				60 Hz					
	n_2 [r/min]	M_2 [Nm]	c		n_2 [r/min]	M_2 [Nm]	c			
	216	1587	2.1		260	1317	2.4	6.864	GFL11-2M □□□225C12	110
	199	1726	2.0		239	1432	2.3	7.466	GFL11-2M □□□225C12	110
	169	2034	3.2		203	1688	3.6	8.800	GFL14-2M □□□225C12	110
	165	2083	1.8		198	1728	2.0	9.010	GFL11-2M □□□225C12	110
	155	2212	3.2		186	1836	3.6	9.571	GFL14-2M □□□225C12	110
	151	2265	1.7		182	1880	1.9	9.799	GFL11-2M □□□225C12	110
	138	2478	1.5		166	2056	1.8	10.720	GFL11-2M □□□225C12	110
	129	2667	3.1		155	2213	3.5	11.537	GFL14-2M □□□225C12	110
	119	2885	1.2		143	2394	1.4	12.480	GFL11-2M □□□225C12	110
	114	3005	2.8		137	2494	3.2	13.000	GFL14-2M □□□225C12	110
	104	3282	2.7		126	2724	3.1	14.200	GFL14-2M □□□225C12	110
	102	3361	1.1		123	2789	1.3	14.538	GFL11-2M □□□225C12	110
	95	3611	2.5		114	2996	2.9	15.620	GFL14-2M □□□225C12	110
	93	3676	1.0		112	3051	1.2	15.904	GFL11-2M □□□225C12	110
	84	4068	2.3		101	3376	2.6	17.600	GFL14-2M □□□225C12	110
	83	4142	0.9		100	3438	1.0	17.920	GFL11-2M □□□225C12	110
	74	4611	2.1		89	3827	2.4	19.948	GFL14-2M □□□225C12	110
	73	4689	0.9		88	3891	1.0	20.286	GFL11-2M □□□225C12	110
	66	5195	1.9		79	4312	2.2	22.476	GFL14-2M □□□225C12	110
	61	5653	1.8		73	4691	2.2	24.456	GFL14-2M □□□225C12	110
	54	6370	1.6		65	5286	2.0	27.556	GFL14-2M □□□225C12	110
	46	7477	1.5		55	6205	1.8	32.344	GFL14-2M □□□225C12	110
	41	8424	1.3		49	6991	1.6	36.444	GFL14-2M □□□225C12	110

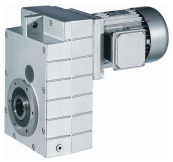

Selection tables

50 Hz, 60 Hz: P_N = 45.0 kW

n_N	1480 r/min				1784 r/min			i		
f_N	50 Hz				60 Hz					
	n_2 [r/min]	M_2 [Nm]	c		n_2 [r/min]	M_2 [Nm]	c			
	216	1934	1.7		259	1604	2.0	6.864	GFL11-2M □□□225C22	110
	207	2014	2.7		249	1671	3.1	7.150	GFL14-2M □□□225C22	110
	198	2103	1.7		238	1745	1.9	7.466	GFL11-2M □□□225C22	110
	190	2191	2.7		229	1817	3.1	7.777	GFL14-2M □□□225C22	110
	168	2479	2.6		202	2057	3.0	8.800	GFL14-2M □□□225C22	110
	164	2538	1.5		198	2106	1.7	9.010	GFL11-2M □□□225C22	110
	155	2696	2.6		186	2237	3.0	9.571	GFL14-2M □□□225C22	110
	151	2761	1.4		182	2290	1.6	9.799	GFL11-2M □□□225C22	110
	138	3020	1.3		166	2505	1.4	10.720	GFL11-2M □□□225C22	110
	128	3250	2.5		155	2696	2.9	11.537	GFL14-2M □□□225C22	110
	119	3516	1.0		143	2917	1.1	12.480	GFL11-2M □□□225C22	110
	114	3662	2.3		137	3038	2.6	13.000	GFL14-2M □□□225C22	110
	104	4000	2.2		125	3319	2.5	14.200	GFL14-2M □□□225C22	110
	102	4095	0.9		122	3398	1.0	14.538	GFL11-2M □□□225C22	110
	95	4400	2.1		114	3650	2.4	15.620	GFL14-2M □□□225C22	110
	93	4480	0.8		112	3717	1.0	15.904	GFL11-2M □□□225C22	110
	84	4958	1.9		101	4113	2.1	17.600	GFL14-2M □□□225C22	110
	74	5619	1.7		89	4662	2.0	19.948	GFL14-2M □□□225C22	110
	66	6332	1.6		79	5253	1.8	22.476	GFL14-2M □□□225C22	110
	61	6889	1.5		73	5715	1.8	24.456	GFL14-2M □□□225C22	110
	54	7763	1.4		65	6440	1.6	27.556	GFL14-2M □□□225C22	110
	46	9112	1.2		55	7559	1.5	32.344	GFL14-2M □□□225C22	110
	41	10267	1.1		49	8517	1.3	36.444	GFL14-2M □□□225C22	110

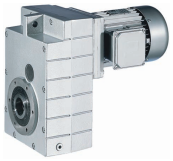

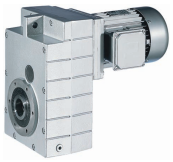

Dimensions

GFL□□-2M H□R

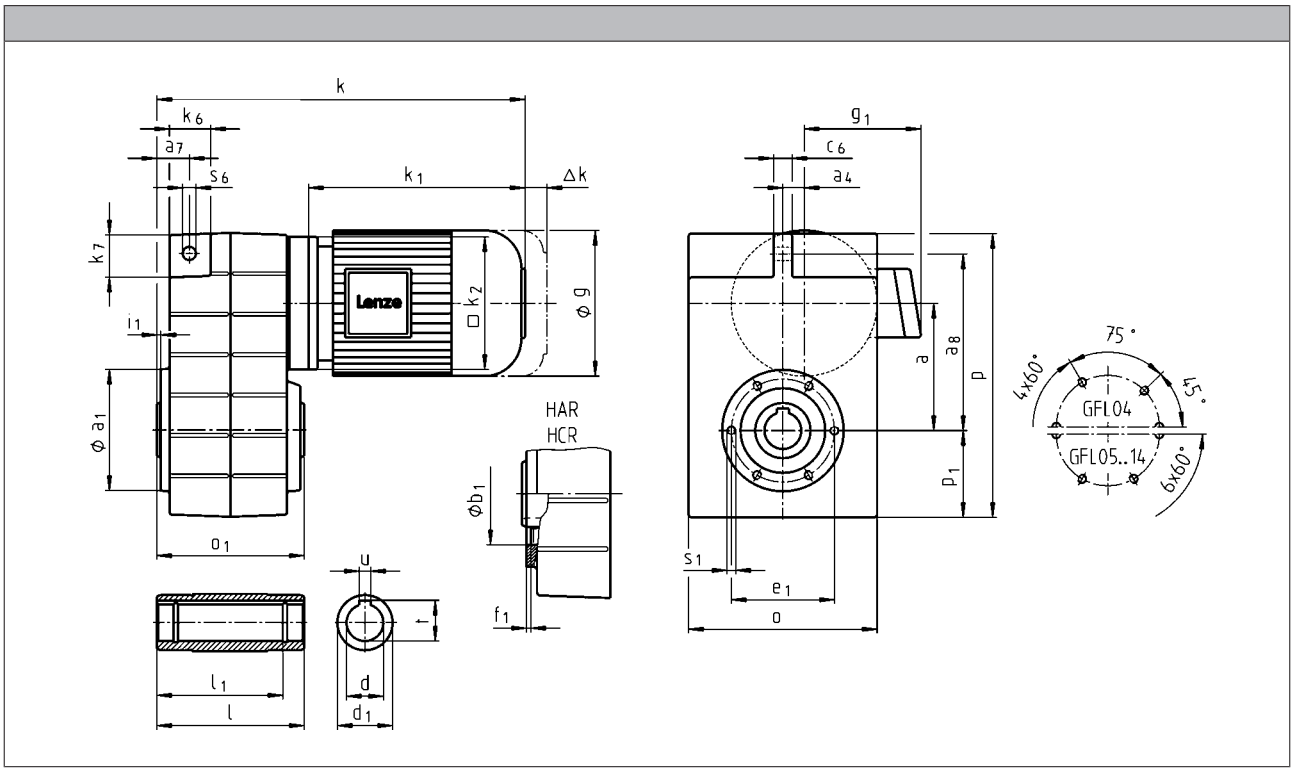

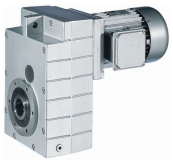

		063C11 063C12 063C31 063C32	063C42	071C11	071C13 071C31 071C32 071C33 071C42	080C13 080C33
g		123		139		156
g_1	MDEMAXX	100		109		150
	MDEMABR	107		118		132
k_1	MDEMAXX	187		207		224.5
k_2		120				145
Δ k	MDEMABR	40		52		73
	MDFMAXX	128				
	MDFMABR	170		165		183
		k				
GFL04		312		332		354
GFL05			333	353		376
GFL06			346		366	389
GFL07						422

	a	a_4	a_7	a_8	c_6	k_6	k_7	o[1)]	p[1)]	p_1	s_6
GFL04	90.5	12.5	22.5	128	14	32	35	148	214	69	12.5
GFL05	112.5	18.5	29	155	16	35	38	165	252	78	14
GFL06	140	22	35	195	20	46	46	206	315	98	14
GFL07	173	29	44	240	25	56	56	256	386	118	18

	d[2)]	d_1	l	l_1	u	t	i_1	o_1	a_1	b_1	e_1	f_1	s_1
	H7				JS9	+0,2				H7			
GFL04	25 30	45 45	115 115	100 100	8 8	28.3 33.3	2.5 2.5	115 115	110	75	90	3	M6x12
GFL05	30 35	50 50	140 140	124 124	8 10	33.3 38.3	4 4	140 140	118	80	100	4	M8x14
GFL06	40 45	65 65	160 160	140 140	12 14	43.3 48.8	5 5	160 160	140	100	120	4	M10x16
GFL07	50 55	75 75	200 200	175 175	14 16	53.8 59.3	5 5	200 200	165	115	140	5	M12x18

[1)] k_2 !

[2)] Not suitable for through machine shaft at motor end:
GFL04-2M H□□ 080C□□; d=30
GFL05-2M H□□ 100C□□; d=35
GFL06-2M H□□ 132C□□; d=40/45
GFL07-2M H□□ 160C□□; d=50/55
GFL11-2M H□□ 225C□□; d=80

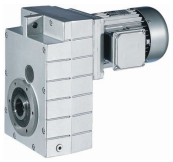

Dimensions

GFL□□-2M H□R

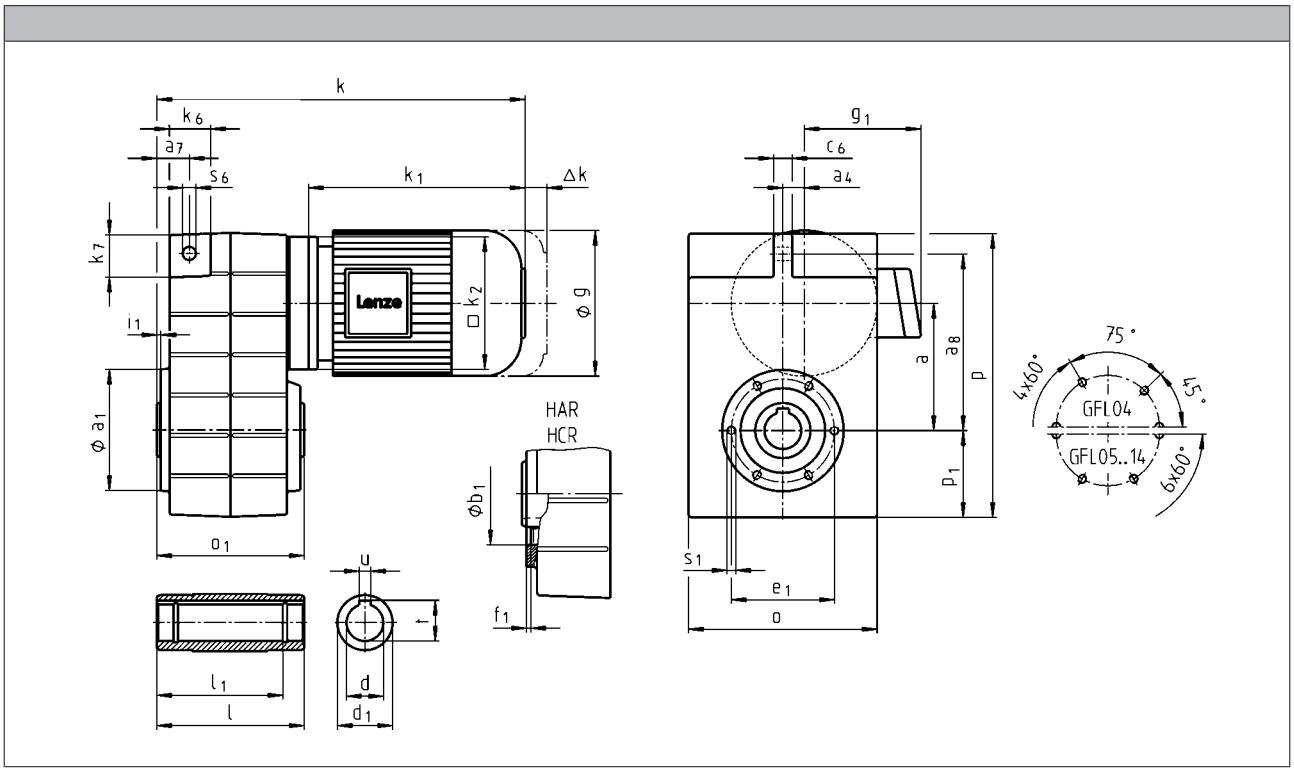

		080C32	090C12	090C32	100C12	100C32	112C22
g		156	176		194		218
g_1	MHEMAXX	150	152	157	166		176
	MHEMABR	132	137		147		158
k_1	MHEMAXX	224.5	274		309	324	363
k_2		145	180				222
Δ k	MHEMABR	73	68		76		90
	MHFMAXX		128		109		102
	MHFMABR	183	181		170		183
		k					
GFL04		354					
GFL05		376	435		470	485	
GFL06		389	448		483	498	543
GFL07		422	481		516	531	576
GFL09			515		550	565	610
GFL11					591	606	651
GFL14							696

GFL shaft-mounted helical gearboxes

Technical data

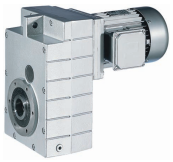

		132C12 132C22	160C22	160C32	180C12 180C32	180C42	225C12 225C22
g		258	310		348		447
g_1	MHEMAXX	195	210		230		346
	MHEMABR	187	210		230		346
k_1	MHEMAXX	403	457.5	501.5	561	618	848
k_2		265	300				
Δ k	MHEMABR	109.5	105		113		
	MHFMAXX	115	149			155	213
	MHFMABR	201.5	179		215		213
		k					
	GFL06	591					
	GFL07	624	684	728			
	GFL09	658	718	762	821	878	
	GFL11	699	759	803	862	919	1149
	GFL14	744	804	848	907	964	1194

	a	a_4	a_7	a_8	c_6	k_6	k_7	o[1)]	p[1)]	p_1	s_6
GFL04	90.5	12.5	22.5	128	14	32	35	148	214	69	12.5
GFL05	112.5	18.5	29	155	16	35	38	165	252	78	14
GFL06	140	22	35	195	20	46	46	206	315	98	14
GFL07	173	29	44	240	25	56	56	256	386	118	18
GFL09	220	37.5	50	300	32	70	70	318	486	149	22
GFL11	276.5	50	65	375	40	84	90	395	600	181	26
GFL14	339	65	80	455	50	100	114	490	740	228	32

	d[2)]	d_1	l	l_1	u	t	i_1	o_1	a_1	b_1	e_1	f_1	s_1
	H7				JS9	+0,2				H7			
GFL04	25 30	45 45	115 115	100 100	8 8	28.3 33.3	2.5 2.5	115 115	110	75	90	3	M6x12
GFL05	30 35	50 50	140 140	124 124	8 10	33.3 38.3	4 4	140 140	118	80	100	4	M8x14
GFL06	40 45	65 65	160 160	140 140	12 14	43.3 48.8	5 5	160 160	140	100	120	4	M10x16
GFL07	50 55	75 75	200 200	175 175	14 16	53.8 59.3	5 5	200 200	165	115	140	5	M12x18
GFL09	60 70	95 95	240 240	210 210	18 20	64.4 74.9	5 5	240 240	205	145	175	6	M16x24
GFL11	70 80	108 108	290 290	250 250	20 22	74.9 85.4	6 6	290 290	240	170	205	4	M20x32
GFL14	100	135	350	305	28	106.4	7	350	290	170	250	6	M24x35

[1)] k_2 !

[2)] Not suitable for through machine shaft at motor end:
GFL04-2M H□□ 080C□□; d=30
GFL05-2M H□□ 100C□□; d=35
GFL06-2M H□□ 132C□□; d=40/45
GFL07-2M H□□ 160C□□; d=50/55
GFL11-2M H□□ 225C□□; d=80

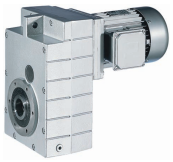

Dimensions

GFL□□-2M HCK

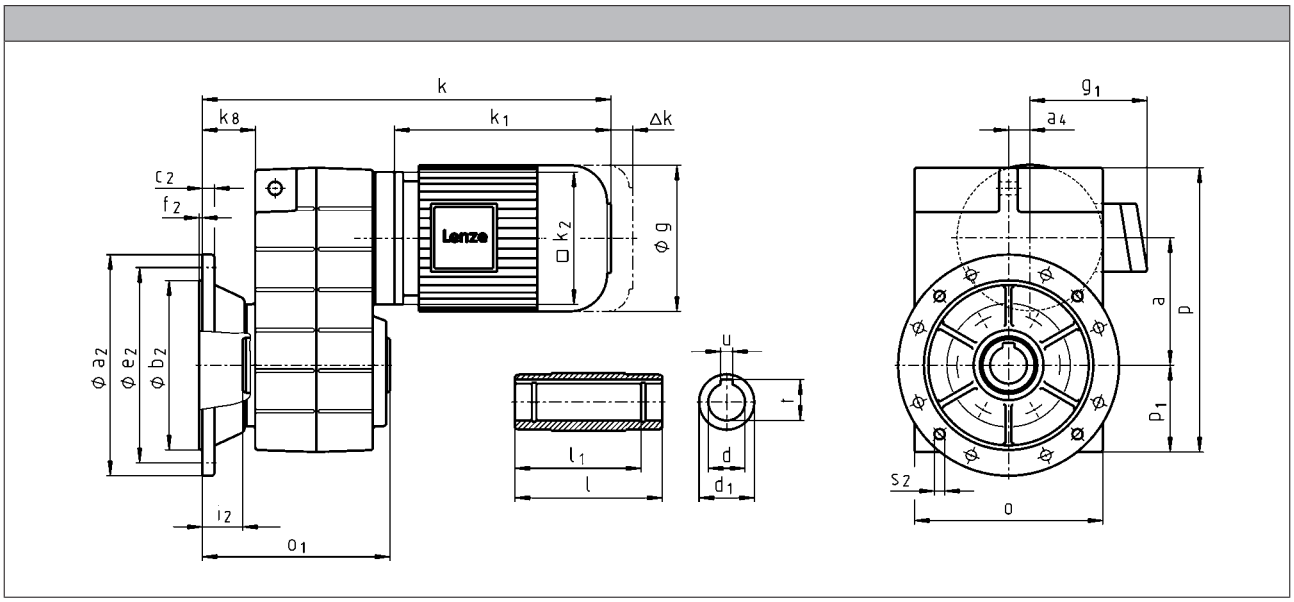

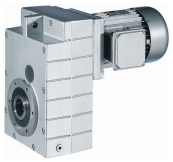

		063C11 063C12 063C31 063C32	063C42	071C11	071C13 071C31 071C32 071C33 071C42	080C13 080C33
g		123		139		156
g_1	MDEMAXX	100		109		150
	MDEMABR	107		118		132
k_1	MDEMAXX	187		207		224.5
k_2		120				145
Δ k	MDEMABR	40		52		73
	MDFMAXX	128				
	MDFMABR	170		165		183
		k				
GFL04		345		365		387
GFL05			366	386		409
GFL06			387		407	430
GFL07						477

	a	a_4	k_8	o[1)]	p[1)]	p_1
GFL04	90.5	12.5	41.8	148	214	69
GFL05	112.5	18.5	46	165	252	78
GFL06	140	22	55.5	206	315	98
GFL07	173	29	72.5	256	386	118

	d[2)]	d_1	l	l_1	u	t	i_2	o_1	a_2	b_2	c_2	e_2	f_2	s_2
	H7				JS9	+0,2				j7				
GFL04	25 30	45 45	115 115	100 100	8 8	28.3 33.3	33.5 33.5	148 148	160	110	10	130	3.5	4 x 9
GFL05	30 35	50 50	140 140	124 124	8 10	33.3 38.3	33 33	173 173	200	130	12	165	4	4 x 11
GFL06	40 45	65 65	160 160	140 140	12 14	43.3 48.8	42 41	201 201	250	180	15	215	4	4 x 14
GFL07	50 55	75 75	200 200	175 175	14 16	53.8 59.3	55 55	255 255	250 300	180 230	15 17	215 265	4 4	4 x 14 4 x 14

[1)] k_2 !

[2)] Not suitable for through machine shaft at motor end:
GFL04-2M H□□ 080C□□; d=30
GFL05-2M H□□ 100C□□; d=35
GFL06-2M H□□ 132C□□; d=40/45
GFL07-2M H□□ 160C□□; d=50/55
GFL11-2M H□□ 225C□□; d=80

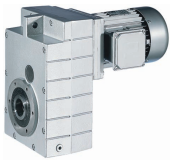

Dimensions

GFL□□-2M HCK

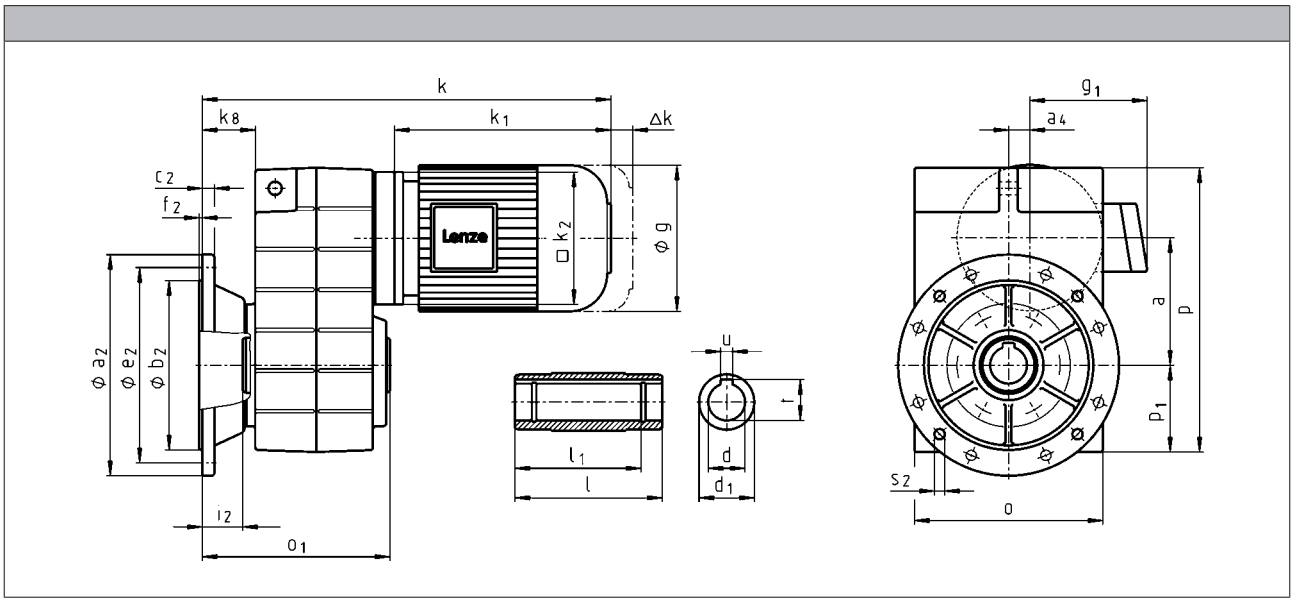

		080C32	090C12	090C32	100C12	100C32	112C22
g		156	176		194		218
g_1	MHEMAXX	150	152	157	166		176
	MHEMABR	132	137		147		158
k_1	MHEMAXX	224.5	274		309	324	363
k_2		145	180				222
Δ k	MHEMABR	73	68		76		90
	MHFMAXX		128		109		102
	MHFMABR	183	181		170		183
		k					
	GFL04	387					
	GFL05	409	468		503	518	
	GFL06	430	489		524	539	584
	GFL07	477	536		571	586	631
	GFL09		575		610	625	670
	GFL11				651	666	711
	GFL14						756

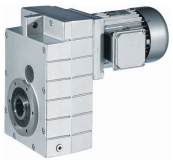

		132C12 132C22	160C22	160C32	180C12 180C32	180C42	225C12 225C22
g		258	310		348		447
g_1	MHEMAXX	195	210		230		346
	MHEMABR	187	210		230		346
k_1	MHEMAXX	403	457.5	501.5	561	618	848
k_2		265	300				
Δ k	MHEMABR	109.5	105		113		
	MHFMAXX	115	149			155	213
	MHFMABR	201.5	179		215		213
		k					
	GFL06	632					
	GFL07	679	739	783			
	GFL09	718	778	822	881	938	
	GFL11	759	819	863	922	979	1209
	GFL14	804	864	908	967	1024	1254

	a	a_4	k_8	o[1)]	p[1)]	p_1
GFL04	90.5	12.5	41.8	148	214	69
GFL05	112.5	18.5	46	165	252	78
GFL06	140	22	55.5	206	315	98
GFL07	173	29	72.5	256	386	118
GFL09	220	37.5	77.5	318	486	149
GFL11	276.5	50	85.5	395	600	181
GFL14	339	65	89.5	490	740	228

	d[2)]	d_1	l	l_1	u	t	i_2	o_1	a_2	b_2	c_2	e_2	f_2	s_2
	H7				JS9	+0,2				j7				
GFL04	25 30	45 45	115 115	100 100	8 8	28.3 33.3	33.5 33.5	148 148	160	110	10	130	3.5	4 x 9
GFL05	30 35	50 50	140 140	124 124	8 10	33.3 38.3	33 33	173 173	200	130	12	165	4	4 x 11
GFL06	40 45	65 65	160 160	140 140	12 14	43.3 48.8	42 41	201 201	250	180	15	215	4	4 x 14
GFL07	50 55	75 75	200 200	175 175	14 16	53.8 59.3	55 55	255 255	250 300	180 230	15 17	215 265	4 4	4 x 14 4 x 14
GFL09	60 70	95 95	240 240	210 210	18 20	64.4 74.9	60 60	300 300	350	250	18	300	4	4 x 17.5
GFL11	70 80	108 108	290 290	250 250	20 22	74.9 85.4	60 60	350 350	400 450	300 350	20 22	350 400	5 5	4 x 17.5 8 x 17.5
GFL14	100	135	350	305	28	106.4	60	410	450	350	22	400	5	8 x 17.5

[1)] k_2 !

[2)] Not suitable for through machine shaft at motor end:
GFL04-2M H□□ 080C□□; d=30
GFL05-2M H□□ 100C□□; d=35
GFL06-2M H□□ 132C□□; d=40/45
GFL07-2M H□□ 160C□□; d=50/55
GFL11-2M H□□ 225C□□; d=80

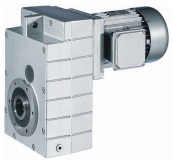

Dimensions

GFL□□-2M V□R

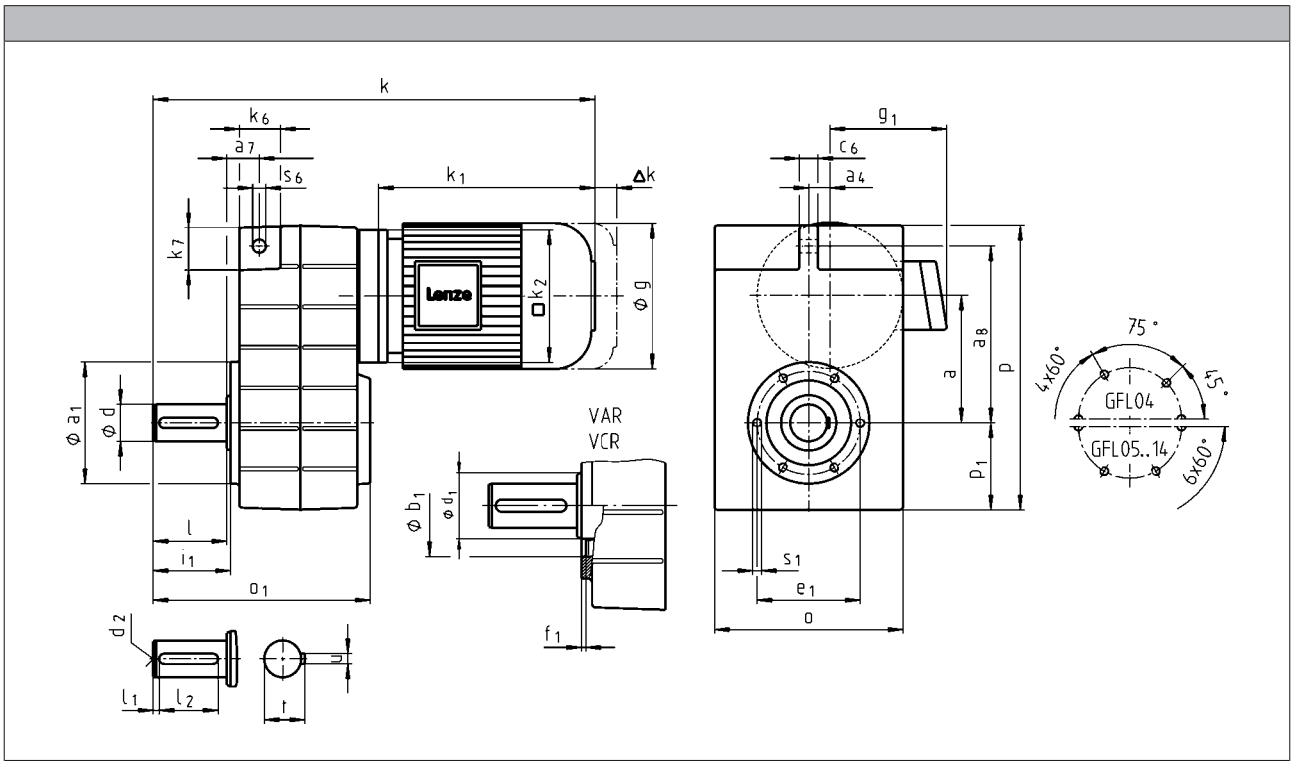

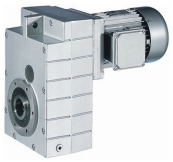

		063C11 063C12 063C31 063C32	063C42	071C11	071C13 071C31 071C32 071C33 071C42	080C13 080C33
g		123		139		156
g_1	MDEMAXX	100		109		150
	MDEMABR	107		118		132
k_1	MDEMAXX	187		207		224.5
k_2		120				145
Δ k	MDEMABR	40		52		73
	MDFMAXX	128				
	MDFMABR	170		165		183
		k				
GFL04		362		382		404
GFL05			393	413		436
GFL06			426		446	469
GFL07						522

	a	a_4	a_7	a_8	c_6	k_6	k_7	$o^{1)}$	$p^{1)}$	p_1	s_6
GFL04	90.5	12.5	22.5	128	14	32	35	148	214	69	12.5
GFL05	112.5	18.5	29	155	16	35	38	165	252	78	14
GFL06	140	22	35	195	20	46	46	206	315	98	14
GFL07	173	29	44	240	25	56	56	256	386	118	18

	d	d_1	d_2	l	l_1	l_2	u	t	o_1	a_1	b_1	e_1	f_1	s_1
	k6										H7			
GFL04	25	45	M10	50	6	40	8	28	162.5	110	75	90	3	M6x12
GFL05	30	45	M10	60	6	45	8	33	196.5	118	80	100	4	M8x14
GFL06	40	65	M16	80	7	63	12	43	235.5	140	100	120	4	M10x16
GFL07	50	75	M16	100	8	80	14	53.5	295.5	165	115	140	5	M12x18

[1)] k_2 !

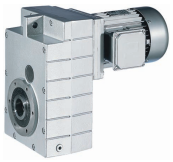

Dimensions

GFL□□-2M V□R

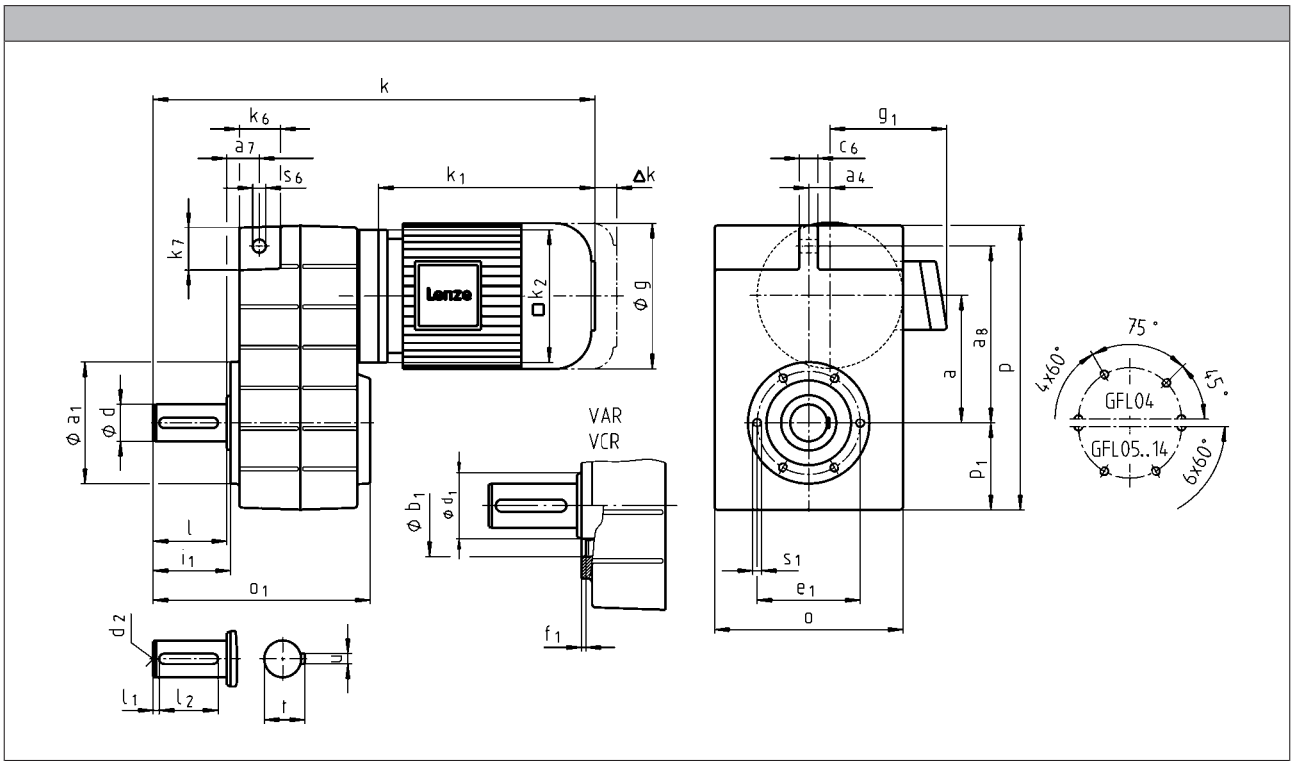

		080C32	090C12	090C32	100C12	100C32	112C22
g		156	176		194		218
g_1	MHEMAXX	150	152	157	166		176
	MHEMABR	132	137		147		158
k_1	MHEMAXX	224.5	274		309	324	363
k_2		145	180				222
Δ k	MHEMABR	73	68		76		90
	MHFMAXX		128		109		102
	MHFMABR	183	181		170		183
		k					
	GFL04	404	464				
	GFL05	436	495		530	545	
	GFL06	469	528		563	578	623
	GFL07	522	581		616	631	676
	GFL09		635		670	685	730
	GFL11				751	766	811
	GFL14						896

GFL shaft-mounted helical gearboxes

Technical data

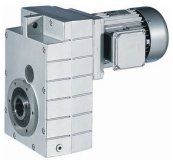

		132C12 132C22	160C22	160C32	180C12 180C32	180C42	225C12 225C22
g		258	310		348		447
g_1	MHEMAXX	195	210		230		346
	MHEMABR	187	210		230		346
k_1	MHEMAXX	403	457.5	501.5	561	618	848
k_2		265	300				
Δ k	MHEMABR	109.5	105		113		
	MHFMAXX	115	149			155	213
	MHFMABR	201.5	179		215		213
		k					
	GFL06	671					
	GFL07	724	784	828			
	GFL09	778	838	882	941	998	
	GFL11	859	919	963	1022	1079	1309
	GFL14	944	1004	1048	1107	1164	1394

	a	a_4	a_7	a_8	c_6	k_6	k_7	o[1)]	p[1)]	p_1	s_6
GFL04	90.5	12.5	22.5	128	14	32	35	148	214	69	12.5
GFL05	112.5	18.5	29	155	16	35	38	165	252	78	14
GFL06	140	22	35	195	20	46	46	206	315	98	14
GFL07	173	29	44	240	25	56	56	256	386	118	18
GFL09	220	37.5	50	300	32	70	70	318	486	149	22
GFL11	276.5	50	65	375	40	84	90	395	600	181	26
GFL14	339	65	80	455	50	100	114	490	740	228	32

	d	d	d_1	d_2	l	l_1	l_2	u	t	o_1	a_1	b_1	e_1	f_1	s_1
	k6	m6										H7			
GFL04	25		45	M10	50	6	40	8	28	162.5	110	75	90	3	M6x12
GFL05	30		45	M10	60	6	45	8	33	196.5	118	80	100	4	M8x14
GFL06	40		65	M16	80	7	63	12	43	235.5	140	100	120	4	M10x16
GFL07	50		75	M16	100	8	80	14	53.5	295.5	165	115	140	5	M12x18
GFL09		60	95	M20	120	8	100	18	64	355.5	205	145	175	6	M16x24
GFL11		80	108	M20	160	15	125	22	85	444.5	240	170	205	4	M20x32
GFL14		100	135	M24	200	18	160	28	106	543.5	290	170	250	6	M24x35

[1)] k_2 !

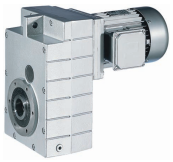

Dimensions

GFL□□-2M VCK

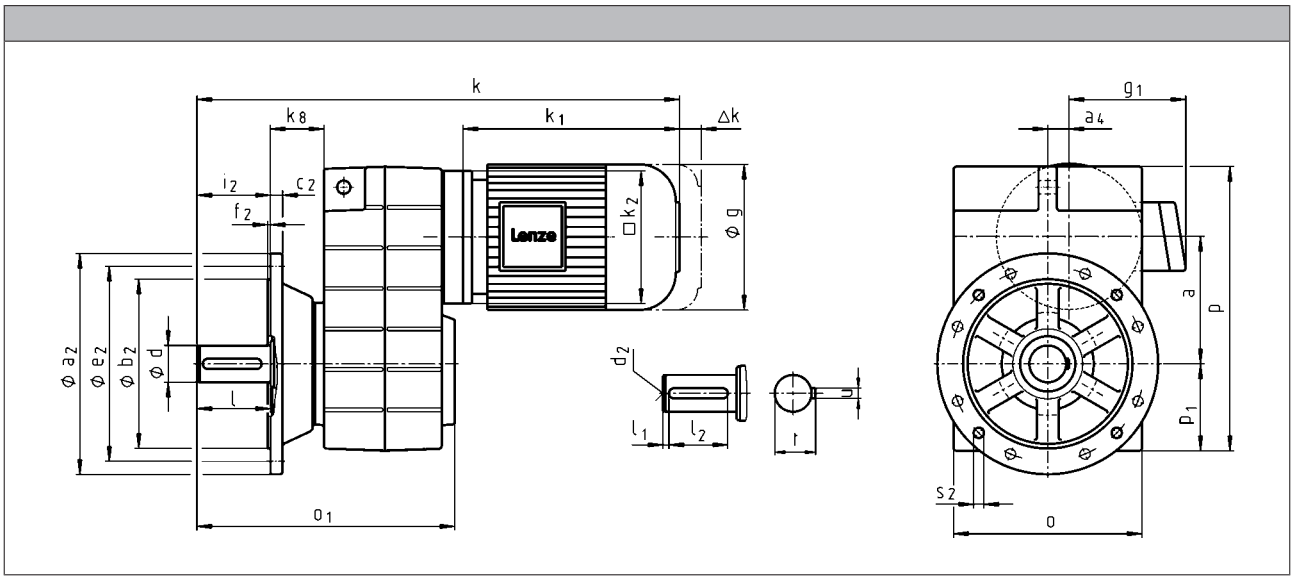

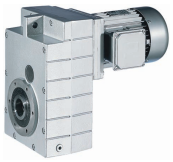

		063C11 063C12 063C31 063C32	063C42	071C11	071C13 071C31 071C32 071C33 071C42	080C13 080C33
g		123		139		156
g_1	MDEMAXX	100		109		150
	MDEMABR	107		118		132
k_1	MDEMAXX	187		207		224.5
k_2		120				145
Δ k	MDEMABR	40		52		73
	MDFMAXX	128				
	MDFMABR	170		165		183
		k				
GFL04		395		415		437
GFL05			426	446		469
GFL06			467		487	510
GFL07						577

	a	a_4	k_8	o[1)]	p[1)]	p_1
GFL04	90.5	12.5	41.8	148	214	69
GFL05	112.5	18.5	46	165	252	78
GFL06	140	22	55.5	206	315	98
GFL07	173	29	72.5	256	386	118

	d	d_1	d_2	l	l_1	l_2	u	t	i_2	o_1	a_2	b_2	c_2	e_2	f_2	s_2
	k6											j7				
GFL04	25	45	M10	50	6	40	8	28	50	195.5	160	110	10	130	3.5	4 x 9
GFL05	30	45	M10	60	6	45	8	33	60	229.5	200	130	12	165	4	4 x 11
GFL06	40	65	M16	80	7	63	12	43	80	276.5	250	180	15	215	4	4 x 14
GFL07	50	75	M16	100	8	80	14	53.5	100	350.5	250 300	180 230	15 17	215 265	4 4	4 x 14 4 x 14

[1)] k_2 !

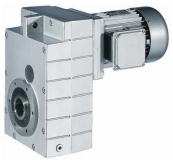

Dimensions

GFL□□-2M VCK

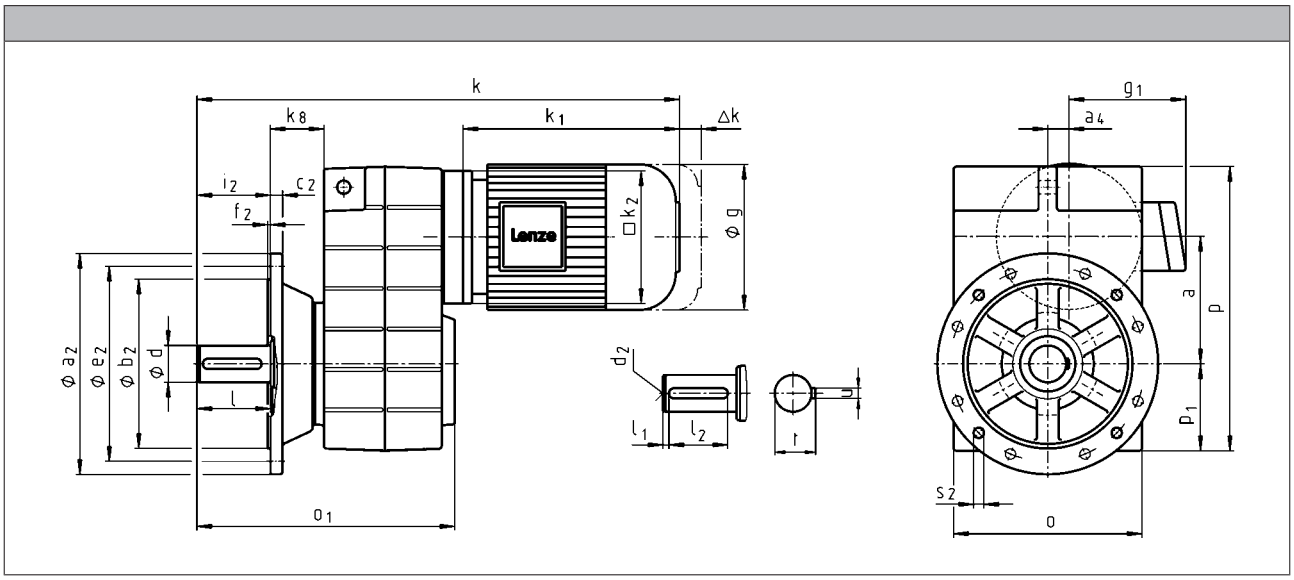

		080C32	090C12	090C32	100C12	100C32	112C22
g		156	176		194		218
g_1	MHEMAXX	150	152	157	166		176
	MHEMABR	132	137		147		158
k_1	MHEMAXX	224.5	274		309	324	363
k_2		145	180				222
Δ k	MHEMABR	73	68		76		90
	MHFMAXX		128		109		102
	MHFMABR	183	181		170		183
		k					
GFL04		437	497				
GFL05		469	528		563	578	
GFL06		510	569		604	619	664
GFL07		577	636		671	686	731
GFL09			695		730	745	790
GFL11					811	826	871
GFL14							956

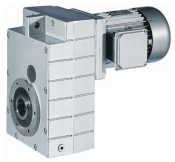

		132C12 132C22	160C22	160C32	180C12 180C32	180C42	225C12 225C22
g		258	310		348		447
g_1	MHEMAXX	195	210		230		346
	MHEMABR	187	210		230		346
k_1	MHEMAXX	403	457.5	501.5	561	618	848
k_2		265	300				
Δ k	MHEMABR	109.5	105		113		
	MHFMAXX	115	149			155	213
	MHFMABR	201.5	179		215		213
		k					
	GFL06	712					
	GFL07	779	839	883			
	GFL09	838	898	942	1001	1058	
	GFL11	919	979	1023	1082	1139	1369
	GFL14	1004	1064	1108	1167	1224	1454

	a	a_4	k_8	o[1)]	p[1)]	p_1
GFL04	90.5	12.5	41.8	148	214	69
GFL05	112.5	18.5	46	165	252	78
GFL06	140	22	55.5	206	315	98
GFL07	173	29	72.5	256	386	118
GFL09	220	37.5	77.5	318	486	149
GFL11	276.5	50	85.5	395	600	181
GFL14	339	65	89.5	490	740	228

	d	d	d_1	d_2	l	l_1	l_2	u	t	i_2	o_1	a_2	b_2	c_2	e_2	f_2	s_2
	k6	m6											j7				
GFL04	25		45	M10	50	6	40	8	28	50	195.5	160	110	10	130	3.5	4 x 9
GFL05	30		45	M10	60	6	45	8	33	60	229.5	200	130	12	165	4	4 x 11
GFL06	40		65	M16	80	7	63	12	43	80	276.5	250	180	15	215	4	4 x 14
GFL07	50		75	M16	100	8	80	14	53.5	100	350.5	250 300	180 230	15 17	215 265	4 4	4 x 14 4 x 14
GFL09		60	95	M20	120	8	100	18	64	120	415.5	350	250	18	300	4	4 x 17.5
GFL11		80	108	M20	160	15	125	22	85	160	504.5	400 450	300 350	20 22	350 400	5 5	4 x 17.5 8 x 17.5
GFL14		100	135	M24	200	18	160	28	106	200	603.5	450	350	22	400	5	8 x 17.5

[1)] k_2 !

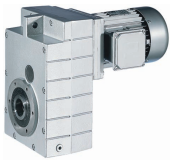

Dimensions

GFL□□-3M H□R

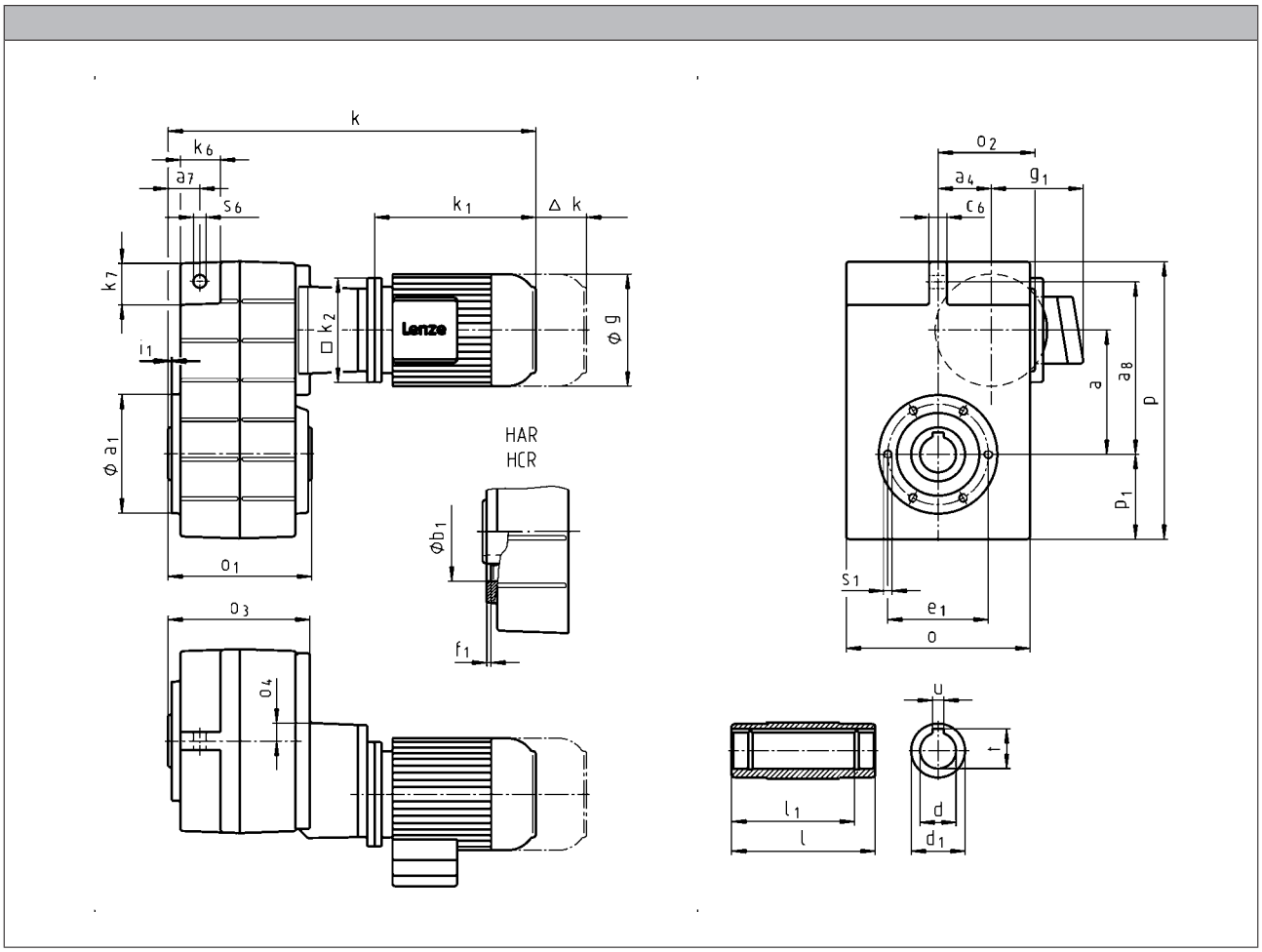

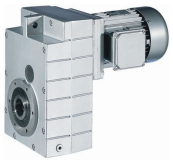

		063C11 063C12 063C31 063C32	063C42	071C11 071C13 071C31 071C32 071C33 071C42	080C13	080C33
g		123		139	156	
g_1	MDEMAXX	100		109	150	
	MDEMABR	107		118	132	
k_1	MDEMAXX	187		207	224.5	
k_2		120			145	
Δ k	MDEMABR	40		52	73	
	MDFMAXX			128		
	MDFMABR	170		165	183	
		k				
GFL05		410		430	452	
GFL06		440		460	482	
GFL07			484	504	526	
GFL09			536	556	578	
GFL11					638	

	a	a_4	a_7	a_8	c_6	k_6	k_7	$o^{1)}$	o_2	o_3	o_4	$p^{1)}$	p_1	s_6
GFL05	112.5	54.5	29	155	16	35	38	165	106.5	140.5	22.6	252	78	14
GFL06	140	58	35	195	20	46	46	206	111	159.5	20.2	315	98	14
GFL07	173	74	44	240	25	56	56	256	135	199	24	386	118	18
GFL09	220	93.5	50	300	32	70	70	318	170	237.5	27	486	149	22
GFL11	276.5	120	65	375	40	84	90	395	216	284.5	33.5	600	181	26

	d	d_1	l	l_1	u	t	i_1	o_1	a_1	b_1	e_1	f_1	s_1
	H7				JS9	+0,2				H7			
GFL05	30 35	50 50	140 140	124 124	8 10	33.3 38.3	4 4	140 140	118	80	100	4	M8x14
GFL06	40 45	65 65	160 160	140 140	12 14	43.3 48.8	5 5	160 160	140	100	120	4	M10x16
GFL07	50 55	75 75	200 200	175 175	14 16	53.8 59.3	5 5	200 200	165	115	140	5	M12x18
GFL09	60 70	95 95	240 240	210 210	18 20	64.4 74.9	5 5	240 240	205	145	175	6	M16x24
GFL11	70 80	108 108	290 290	250 250	20 22	74.9 85.4	6 6	290 290	240	170	205	4	M20x32

[1)] k_2 !

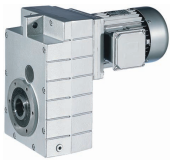

Dimensions

GFL□□-3M H□R

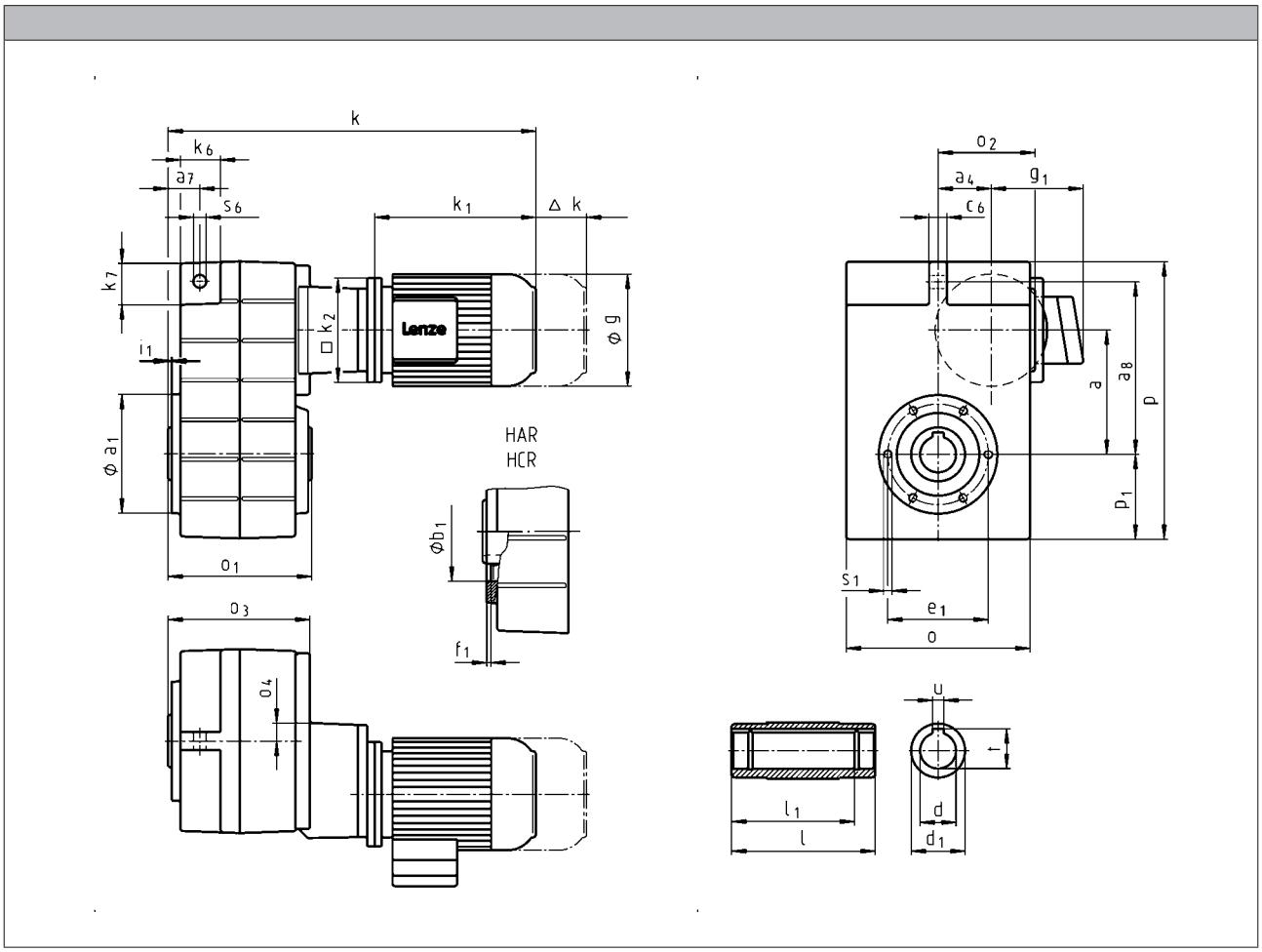

		080C32	090C12	090C32	100C12
g		156	176		194
g_1	MHEMAXX	150	152	157	166
	MHEMABR	132	137		147
k_1	MHEMAXX	224.5	274		309
k_2		145	180		
Δ k	MHEMABR	73	68		76
	MHFMAXX		128		109
	MHFMABR	183	181		170
		k			
	GFL06	482	542		
	GFL07	526	586		621
	GFL09	578	638		673
	GFL11	638	698		733
	GFL14		777		812

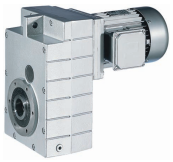

		100C32	112C22	132C12 132C22	160C22	160C32
g		194	218	258	310	
g_1	MHEMAXX	166	176	195	210	
	MHEMABR	147	158	187	210	
k_1	MHEMAXX	324	363	403	457.5	501.5
k_2		180	222	265	300	
Δ k	MHEMABR	76	90	109.5	105	
	MHFMAXX	109	102	115	149	
	MHFMABR	170	183	201.5	179	
		k				
	GFL09	688	733			
	GFL11	748	793	841		
	GFL14	827	872	920	979	1023

	a	a_4	a_7	a_8	c_6	k_6	k_7	$o^{1)}$	o_2	o_3	o_4	$p^{1)}$	p_1	s_6
GFL06	140	58	35	195	20	46	46	206	111	159.5	20.2	315	98	14
GFL07	173	74	44	240	25	56	56	256	135	199	24	386	118	18
GFL09	220	93.5	50	300	32	70	70	318	170	237.5	27	486	149	22
GFL11	276.5	120	65	375	40	84	90	395	216	284.5	33.5	600	181	26
GFL14	339	154	80	455	50	100	114	490	271	339.5	38	740	228	32

	d H7	d_1	l	l_1	u JS9	t +0,2	i_1	o_1	a_1	b_1 H7	e_1	f_1	s_1
GFL06	40 45	65 65	160 160	140 140	12 14	43.3 48.8	5 5	160 160	140	100	120	4	M10x16
GFL07	50 55	75 75	200 200	175 175	14 16	53.8 59.3	5 5	200 200	165	115	140	5	M12x18
GFL09	60 70	95 95	240 240	210 210	18 20	64.4 74.9	5 5	240 240	205	145	175	6	M16x24
GFL11	70 80	108 108	290 290	250 250	20 22	74.9 85.4	6 6	290 290	240	170	205	4	M20x32
GFL14	100	135	350	305	28	106.4	7	350	290	170	250	6	M24x35

[1)] k_2 !

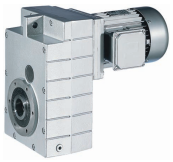

Dimensions

GFL□□-3M HCK

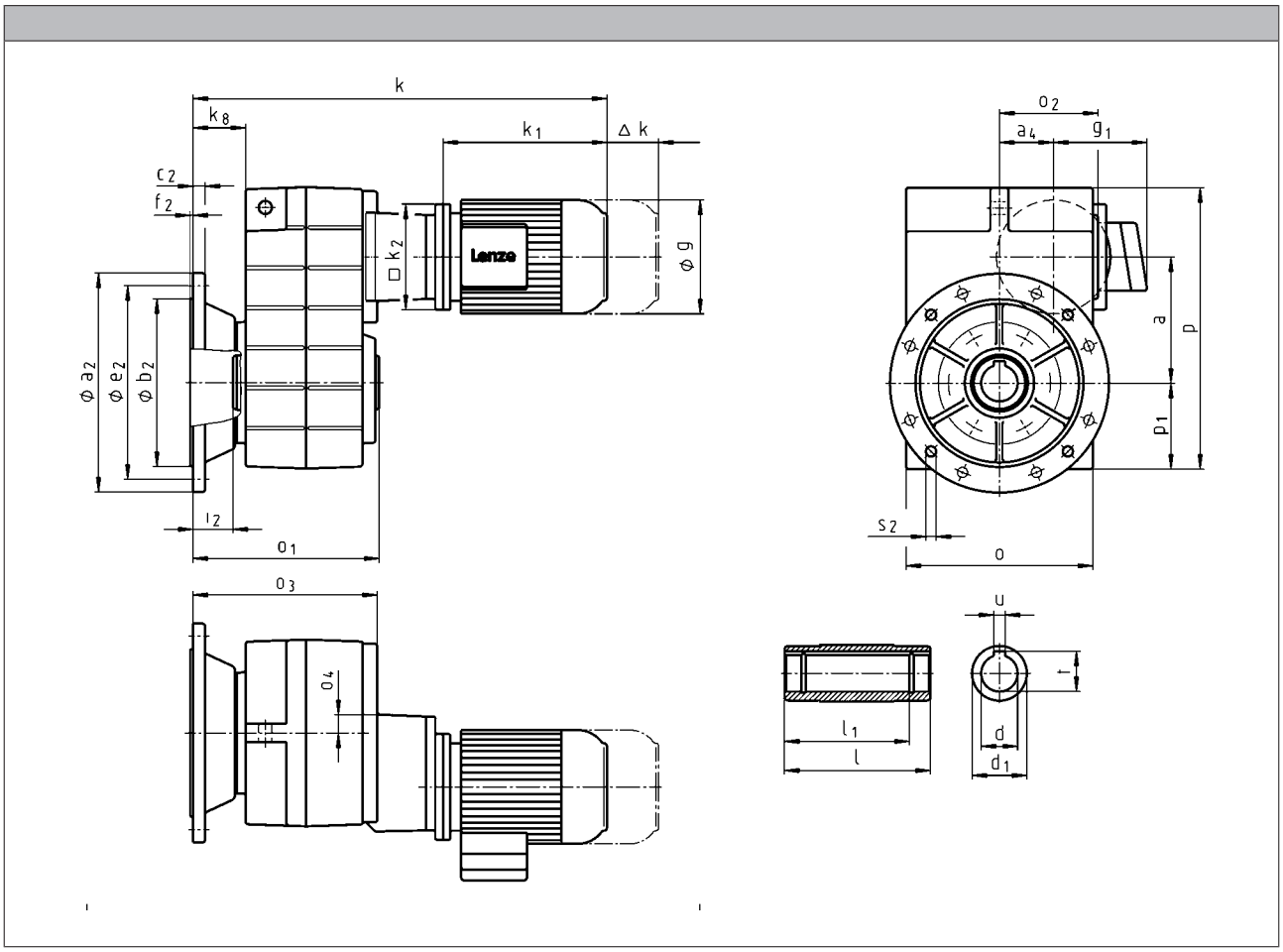

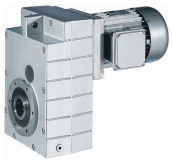

		063C11 063C12 063C31 063C32	063C42	071C11 071C13 071C31 071C32 071C33 071C42	080C13	080C33
g		123		139	156	
g_1	MDEMAXX	100		109	150	
	MDEMABR	107		118	132	
k_1	MDEMAXX	187		207	224.5	
k_2		120			145	
Δ k	MDEMABR	40		52	73	
	MDFMAXX	128				
	MDFMABR	170		165	183	
		k				
GFL05		443		463	485	
GFL06		481		501	523	
GFL07			539	559	581	
GFL09			596	616	638	
GFL11					698	

	a	a_4	k_8	o[1)]	o_2	o_3	o_4	p[1)]	p_1
GFL05	112.5	54.5	46	165	106.5	173.5	22.6	252	78
GFL06	140	58	55.5	206	111	200.5	20.2	315	98
GFL07	173	74	72.5	256	135	254	24	386	118
GFL09	220	93.5	77.5	318	170	297.5	27	486	149
GFL11	276.5	120	85.5	395	216	344.5	33.5	600	181

	d	d_1	l	l_1	u	t	i_2	o_1	a_2	b_2	c_2	e_2	f_2	s_2
	H7				JS9	+0,2				j7				
GFL05	30 35	50 50	140 140	124 124	8 10	33.3 38.3	33 33	173 173	200	130	12	165	4	4 x 11
GFL06	40 45	65 65	160 160	140 140	12 14	43.3 48.8	42 41	201 201	250	180	15	215	4	4 x 14
GFL07	50 55	75 75	200 200	175 175	14 16	53.8 59.3	55 55	255 255	250 300	180 230	15 17	215 265	4 4	4 x 14 4 x 14
GFL09	60 70	95 95	240 240	210 210	18 20	64.4 74.9	60 60	300 300	350	250	18	300	4	4 x 17.5
GFL11	70 80	108 108	290 290	250 250	20 22	74.9 85.4	60 60	350 350	400 450	300 350	20 22	350 400	5 5	4 x 17.5 8 x 17.5

[1)] k_2 !

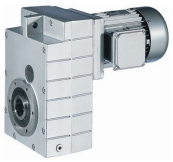

Dimensions

GFL□□-3M HCK

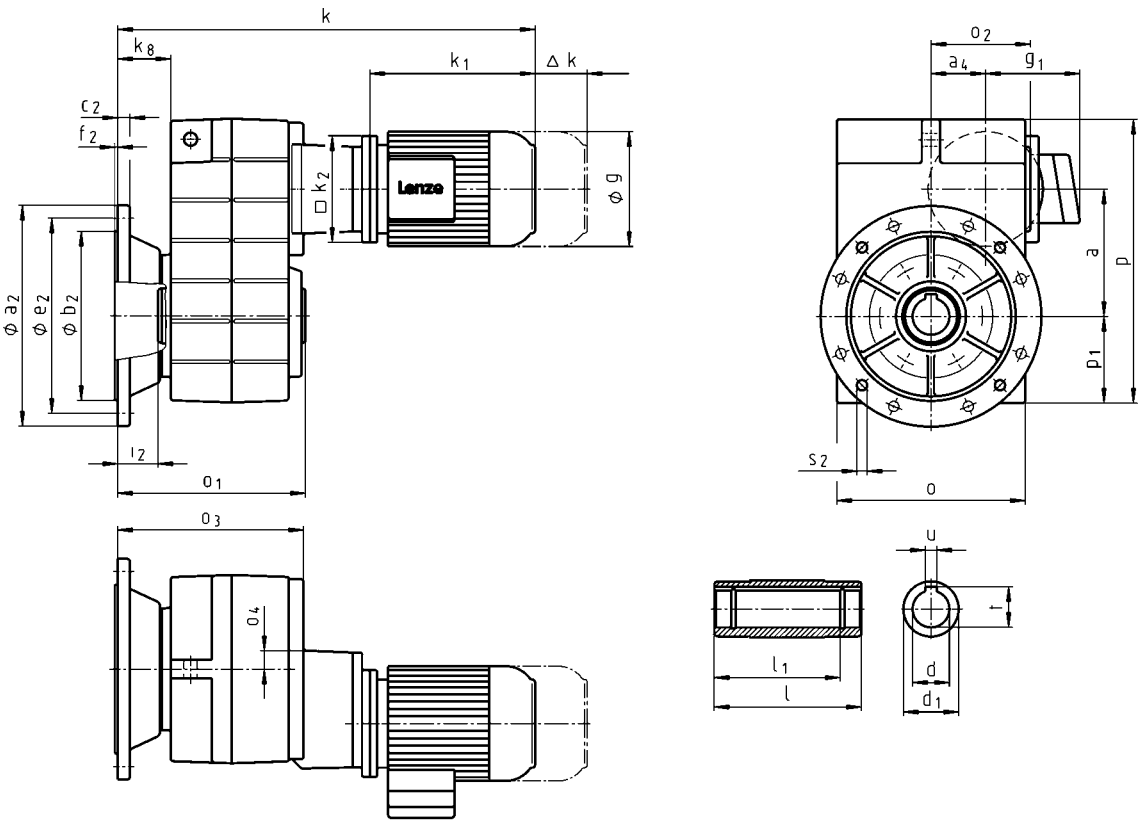

		080C32	090C12	090C32	100C12
g		156	176		194
g_1	MHEMAXX	150	152	157	166
	MHEMABR	132	137		147
k_1	MHEMAXX	224.5	274		309
k_2		145	180		
Δ k	MHEMABR	73	68		76
	MHFMAXX		128		109
	MHFMABR	183	181		170
		k			
GFL06		523	583		
GFL07		581	641		676
GFL09		638	698		733
GFL11		698	758		793
GFL14			837		872

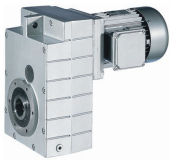

		100C32	112C22	132C12 132C22	160C22	160C32
g		194	218	258	310	
g_1	MHEMAXX	166	176	195	210	
	MHEMABR	147	158	187	210	
k_1	MHEMAXX	324	363	403	457.5	501.5
k_2		180	222	265	300	
Δ k	MHEMABR	76	90	109.5	105	
	MHFMAXX	109	102	115	149	
	MHFMABR	170	183	201.5	179	
		k				
	GFL09	748	793			
	GFL11	808	853	901		
	GFL14	887	932	980	1039	1083

	a	a_4	k_8	o[1)]	o_2	o_3	o_4	p[1)]	p_1
GFL06	140	58	55.5	206	111	200.5	20.2	315	98
GFL07	173	74	72.5	256	135	254	24	386	118
GFL09	220	93.5	77.5	318	170	297.5	27	486	149
GFL11	276.5	120	85.5	395	216	344.5	33.5	600	181
GFL14	339	154	89.5	490	271	399.5	38	740	228

	d	d_1	l	l_1	u	t	i_2	o_1	a_2	b_2	c_2	e_2	f_2	s_2
	H7				JS9	+0,2				j7				
GFL06	40 45	65 65	160 160	140 140	12 14	43.3 48.8	42 41	201 201	250	180	15	215	4	4 x 14
GFL07	50 55	75 75	200 200	175 175	14 16	53.8 59.3	55 55	255 255	250 300	180 230	15 17	215 265	4 4	4 x 14 4 x 14
GFL09	60 70	95 95	240 240	210 210	18 20	64.4 74.9	60 60	300 300	350	250	18	300	4	4 x 17.5
GFL11	70 80	108 108	290 290	250 250	20 22	74.9 85.4	60 60	350 350	400 450	300 350	20 22	350 400	5 5	4 x 17.5 8 x 17.5
GFL14	100	135	350	305	28	106.4	60	410	450	350	22	400	5	8 x 17.5

[1)] k_2 !

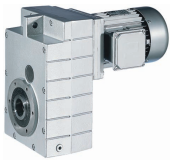

Dimensions

GFL□□-3M V□R

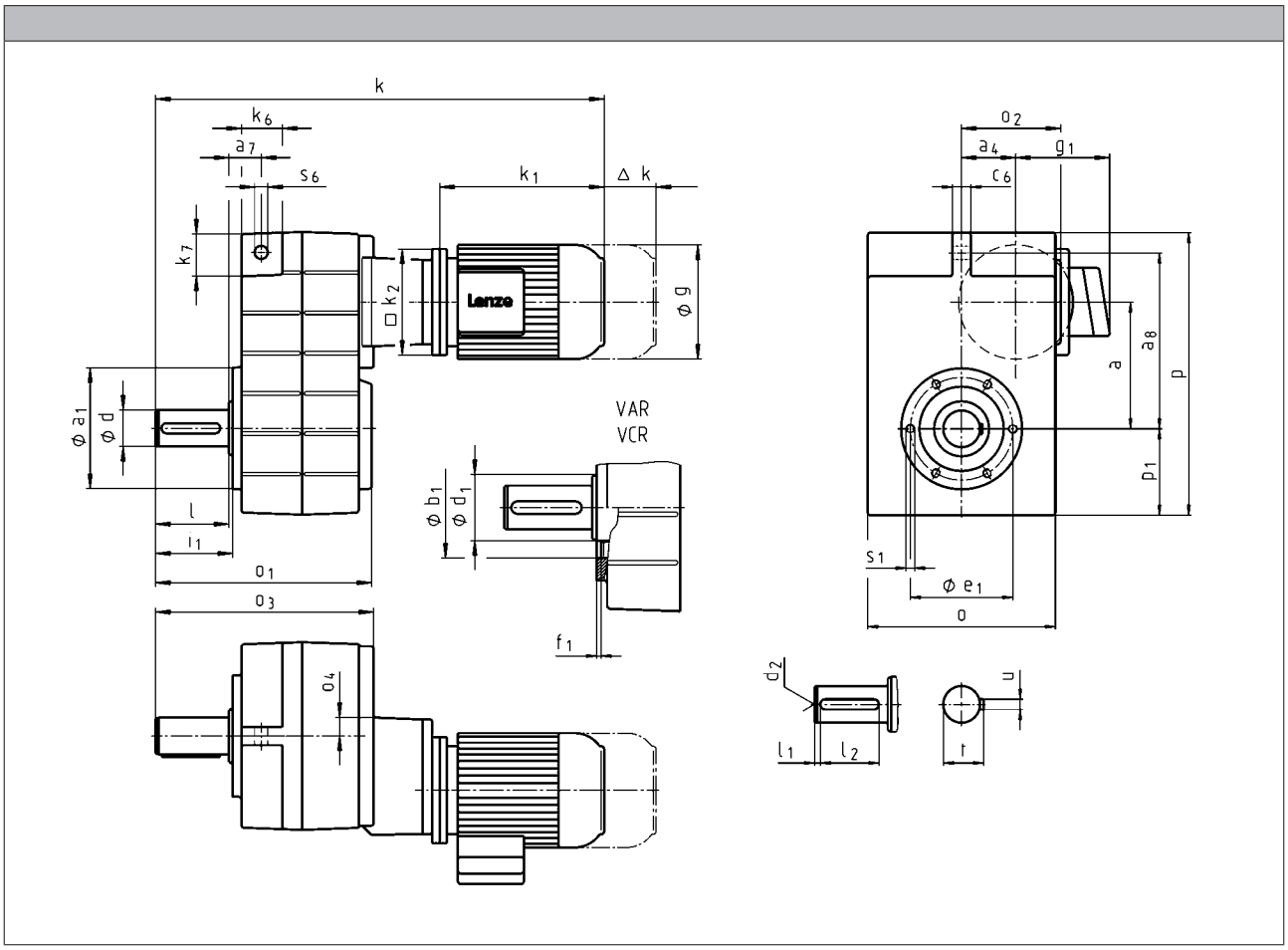

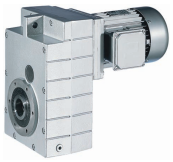

		063C11 063C12 063C31 063C32	063C42	071C11 071C13 071C31 071C32 071C33 071C42	080C13	080C33
g		123		139	156	
g_1	MDEMAXX	100		109	150	
	MDEMABR	107		118	132	
k_1	MDEMAXX	187		207	224.5	
k_2		120			145	
Δ k	MDEMABR	40		52	73	
	MDFMAXX	128				
	MDFMABR	170		165	183	
		k				
GFL05		470		490	512	
GFL06		520		540	562	
GFL07			584	604	626	
GFL09			656	676	698	
GFL11					798	

	a	a_4	a_7	a_8	c_6	k_6	k_7	o[1)]	o_2	o_3	o_4	p[1)]	p_1	s_6
GFL05	112.5	54.5	29	155	16	35	38	165	106.5	200.5	22.6	252	78	14
GFL06	140	58	35	195	20	46	46	206	111	239.5	20.2	315	98	14
GFL07	173	74	44	240	25	56	56	256	135	299	24	386	118	18
GFL09	220	93.5	50	300	32	70	70	318	170	357.5	27	486	149	22
GFL11	276.5	120	65	375	40	84	90	395	216	444.5	33.5	600	181	26

	d	d	d_1	d_2	l	l_1	l_2	u	t	o_1	a_1	b_1	e_1	f_1	s_1
	k6	m6										H7			
GFL05	30		45	M10	60	6	45	8	33	196.5	118	80	100	4	M8x14
GFL06	40		65	M16	80	7	63	12	43	235.5	140	100	120	4	M10x16
GFL07	50		75	M16	100	8	80	14	53.5	295.5	165	115	140	5	M12x18
GFL09		60	95	M20	120	8	100	18	64	355.5	205	145	175	6	M16x24
GFL11		80	108	M20	160	15	125	22	85	444.5	240	170	205	4	M20x32

[1)] k_2 !

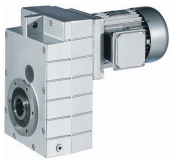

Dimensions

GFL□□-3M V□R

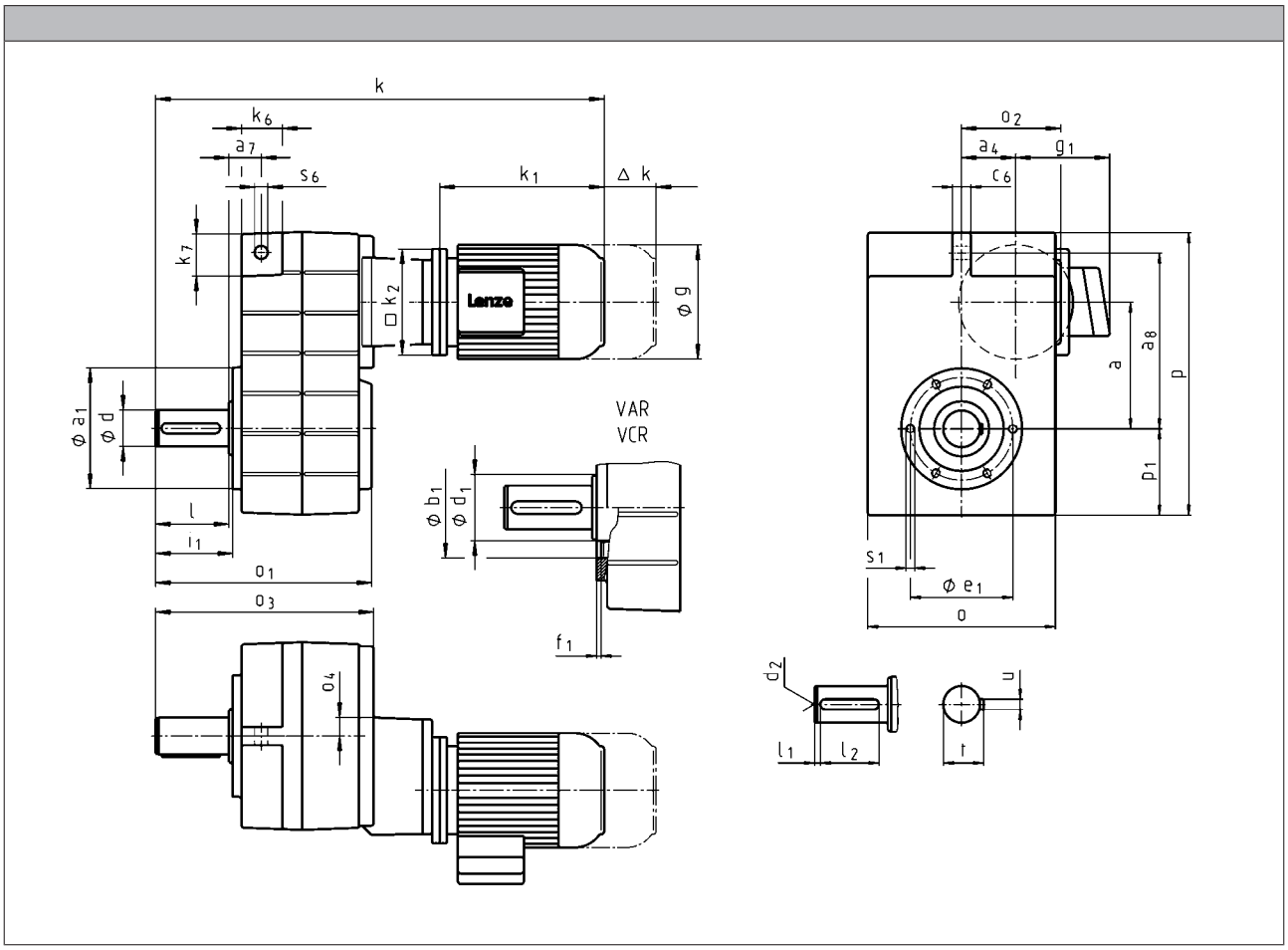

		080C32	090C12	090C32	100C12
g		156	176		194
g_1	MHEMAXX	150	152	157	166
	MHEMABR	132	137		147
k_1	MHEMAXX	224.5	274		309
k_2		145	180		
Δ k	MHEMABR	73	68		76
	MHFMAXX		128		109
	MHFMABR	183	181		170
		k			
GFL06		562	622		
GFL07		626	686		721
GFL09		698	758		793
GFL11		798	858		893
GFL14			977		1012

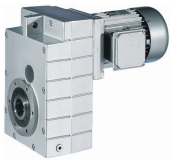

		100C32	112C22	132C12 132C22	160C22	160C32
g		194	218	258	310	
g_1	MHEMAXX	166	176	195	210	
	MHEMABR	147	158	187	210	
k_1	MHEMAXX	324	363	403	457.5	501.5
k_2		180	222	265	300	
Δ k	MHEMABR	76	90	109.5	105	
	MHFMAXX	109	102	115	149	
	MHFMABR	170	183	201.5	179	
		k				
	GFL09	808	853			
	GFL11	908	953	1001		
	GFL14	1027	1072	1120	1179	1223

	a	a_4	a_7	a_8	c_6	k_6	k_7	o[1)]	o_2	o_3	o_4	p[1)]	p_1	s_6
GFL06	140	58	35	195	20	46	46	206	111	239.5	20.2	315	98	14
GFL07	173	74	44	240	25	56	56	256	135	299	24	386	118	18
GFL09	220	93.5	50	300	32	70	70	318	170	357.5	27	486	149	22
GFL11	276.5	120	65	375	40	84	90	395	216	444.5	33.5	600	181	26
GFL14	339	154	80	455	50	100	114	490	271	539.5	38	740	228	32

	d	d	d_1	d_2	l	l_1	l_2	u	t	o_1	a_1	b_1	e_1	f_1	s_1
	k6	m6										H7			
GFL06	40		65	M16	80	7	63	12	43	235.5	140	100	120	4	M10x16
GFL07	50		75	M16	100	8	80	14	53.5	295.5	165	115	140	5	M12x18
GFL09		60	95	M20	120	8	100	18	64	355.5	205	145	175	6	M16x24
GFL11		80	108	M20	160	15	125	22	85	444.5	240	170	205	4	M20x32
GFL14		100	135	M24	200	18	160	28	106	543.5	290	170	250	6	M24x35

[1)] k_2 !

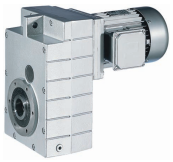

Dimensions

GFL□□-3M VCK

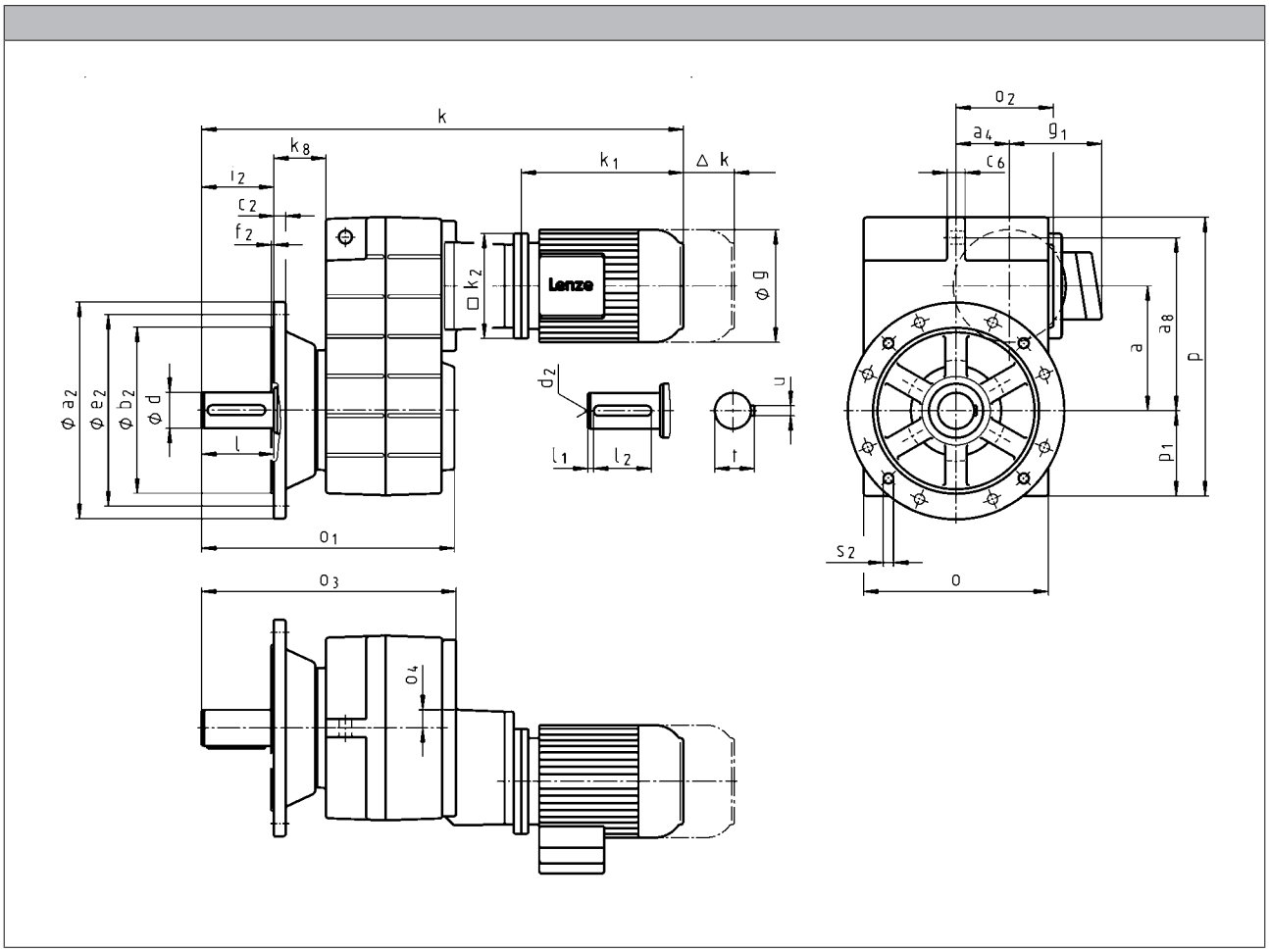

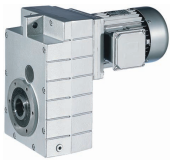

		063C11 063C12 063C31 063C32	063C42	071C11 071C13 071C31 071C32 071C33 071C42	080C13	080C33
g		123		139	156	
g_1	MDEMAXX	100		109	150	
	MDEMABR	107		118	132	
k_1	MDEMAXX	187		207	224.5	
k_2		120			145	
Δ k	MDEMABR	40		52	73	
	MDFMAXX	128				
	MDFMABR	170		165	183	
		k				
GFL05		503		523	545	
GFL06		561		581	603	
GFL07			639	659	681	
GFL09			716	736	758	
GFL11					858	

	a	a_4	k_8	o[1)]	o_2	o_3	o_4	p[1)]	p_1
GFL05	112.5	54.5	46	165	106.5	233.5	22.6	252	78
GFL06	140	58	55.5	206	111	280.5	20.2	315	98
GFL07	173	74	72.5	256	135	354	24	386	118
GFL09	220	93.5	77.5	318	170	417.5	27	486	149
GFL11	276.5	120	85.5	395	216	504.5	33.5	600	181

	d	d	d_1	d_2	l	l_1	l_2	u	t	i_2	o_1	a_2	b_2	c_2	e_2	f_2	s_2
	k6	m6											j7				
GFL05	30		45	M10	60	6	45	8	33	60	229.5	200	130	12	165	4	4 x 11
GFL06	40		65	M16	80	7	63	12	43	80	276.5	250	180	15	215	4	4 x 14
GFL07	50		75	M16	100	8	80	14	53.5	100	350.5	250 300	180 230	15 17	215 265	4 4	4 x 14 4 x 14
GFL09		60	95	M20	120	8	100	18	64	120	415.5	350	250	18	300	4	4 x 17.5
GFL11		80	108	M20	160	15	125	22	85	160	504.5	400 450	300 350	20 22	350 400	5 5	4 x 17.5 8 x 17.5

[1)] k_2 !

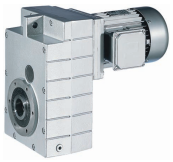

Dimensions

GFL□□-3M VCK

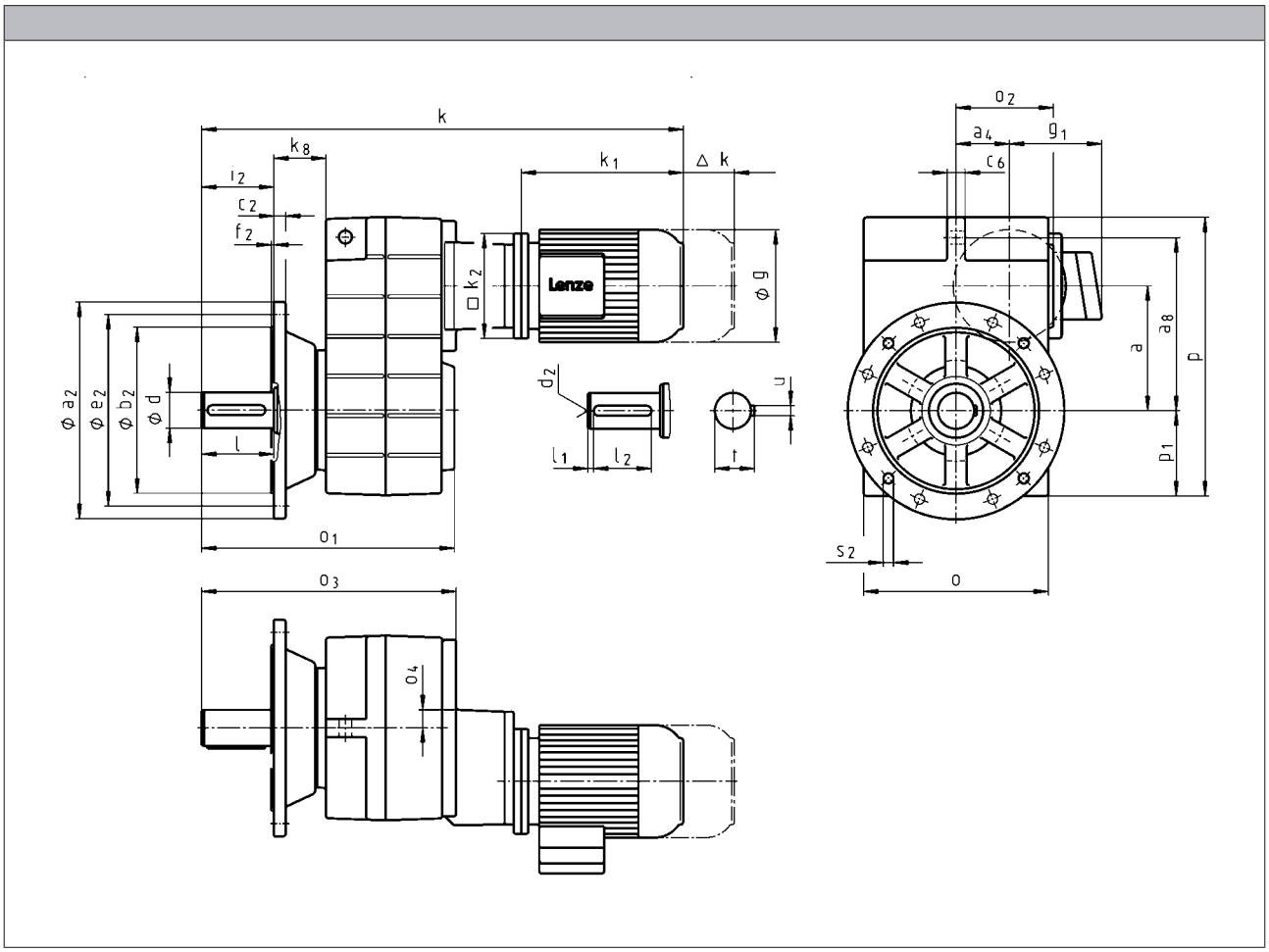

		080C32	090C12	090C32	100C12
g		156	176		194
g_1	MHEMAXX	150	152	157	166
	MHEMABR	132	137		147
k_1	MHEMAXX	224.5	274		309
k_2		145	180		
Δ k	MHEMABR	73	68		76
	MHFMAXX		128		109
	MHFMABR	183	181		170
		k			
GFL06		603	663		
GFL07		681	741		776
GFL09		758	818		853
GFL11		858	918		953
GFL14			1037		1072

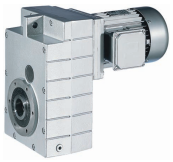

		100C32	112C22	132C12 132C22	160C22	160C32
g		194	218	258	310	
g_1	MHEMAXX	166	176	195	210	
	MHEMABR	147	158	187	210	
k_1	MHEMAXX	324	363	403	457.5	501.5
k_2		180	222	265	300	
Δ k	MHEMABR	76	90	109.5	105	
	MHFMAXX	109	102	115	149	
	MHFMABR	170	183	201.5	179	
		k				
	GFL09	868	913			
	GFL11	968	1013	1061		
	GFL14	1087	1132	1180	1239	1283

	a	**a_4**	**k_8**	**o**[1)]	**o_2**	**o_3**	**o_4**	**p**[1)]	**p_1**
GFL06	140	58	55.5	206	111	280.5	20.2	315	98
GFL07	173	74	72.5	256	135	354	24	386	118
GFL09	220	93.5	77.5	318	170	417.5	27	486	149
GFL11	276.5	120	85.5	395	216	504.5	33.5	600	181
GFL14	339	154	89.5	490	271	599.5	38	740	228

	d	**d**	**d_1**	**d_2**	**l**	**l_1**	**l_2**	**u**	**t**	**i_2**	**o_1**	**a_2**	**b_2**	**c_2**	**e_2**	**f_2**	**s_2**
	k6	m6											j7				
GFL06	40		65	M16	80	7	63	12	43	80	276.5	250	180	15	215	4	4 x 14
GFL07	50		75	M16	100	8	80	14	53.5	100	350.5	250 300	180 230	15 17	215 265	4 4	4 x 14 4 x 14
GFL09		60	95	M20	120	8	100	18	64	120	415.5	350	250	18	300	4	4 x 17.5
GFL11		80	108	M20	160	15	125	22	85	160	504.5	400 450	300 350	20 22	350 400	5 5	4 x 17.5 8 x 17.5
GFL14		100	135	M24	200	18	160	28	106	200	603.5	450	350	22	400	5	8 x 17.5

[1)] k_2 !

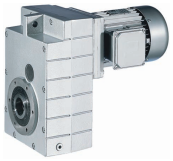

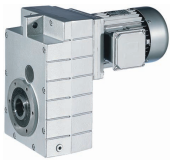

Hollow shaft with shrink disc

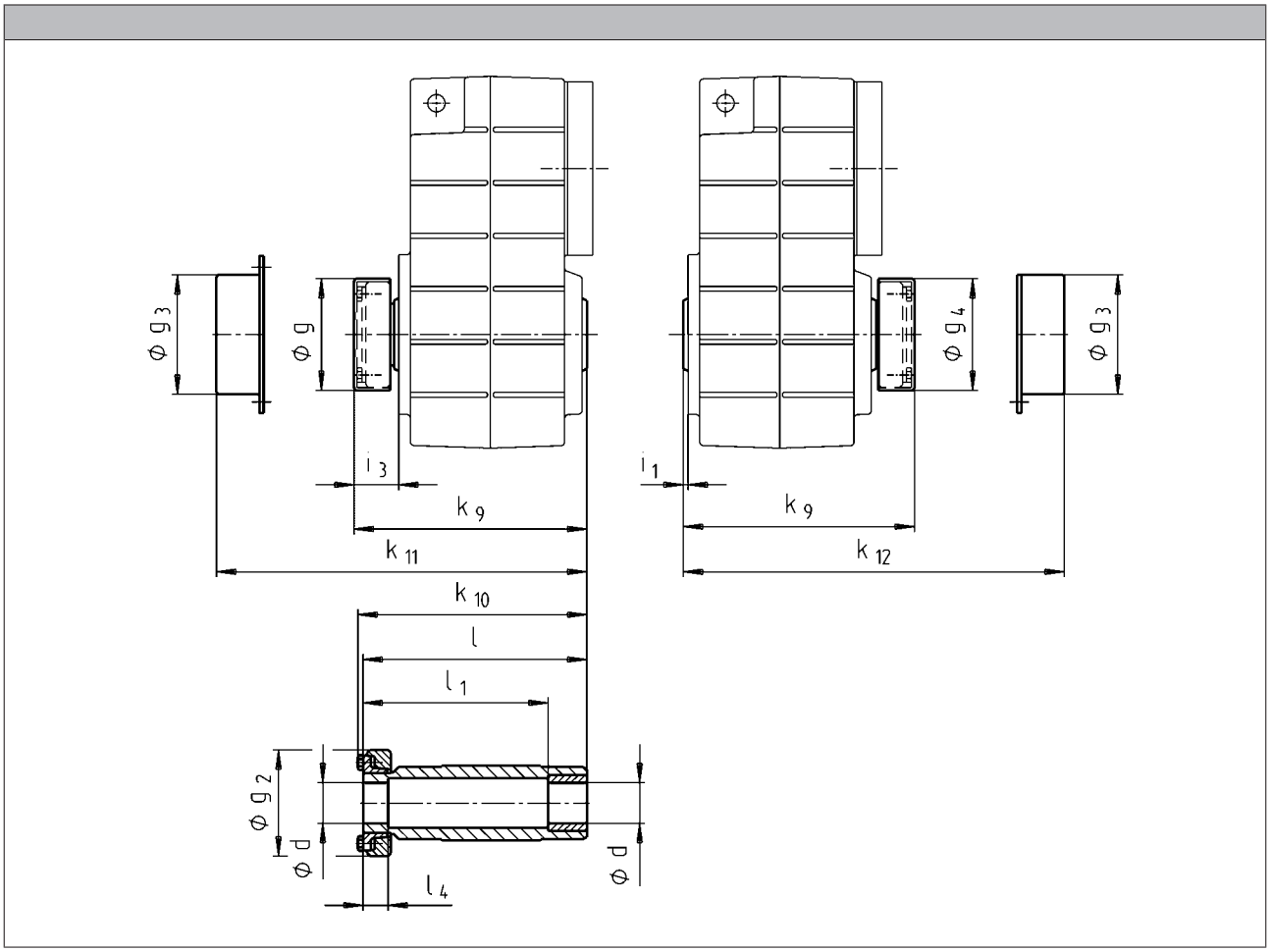

	d [1]	g_2	g_3	g_4	i_1	k_9	k_{10}	k_{11}	k_{12}	l	l_1	l_4
	h6											
GFL04	25 30	72	79	76	2.5	150	148	154	154	142	122	26
GFL04	25 30	72	79	76	2.5	150	148	154	154	142	122	26
GFL05	35	80	90	84	4.0	176	174	179	180	168	148	28
GFL06	40	90	100	94	5.0	202	200	204	205	194	164	30
GFL07	50	110	124	116	5.0	241	238	244	245	232	192	26
GFL09	65	141	159	147	5.0	288	285	287	288	278	228	30
GFL11	80	170	191	176	6.0	347	344	349	350	338	238	42
GFL14	100	215	253	221	7.0	418	415	421	422	407	307	55

[1] Machine shaft design.

► Output flange and hollow shaft with shrink disc (design S□K) is only possible with shrink disc in position 1.

► Not suitable for through machine shaft at motor end:
GFL04-2M S□□ 080C□□; d=30
GFL05-2M S□□ 100C□□; d=35
GFL06-2M S□□ 132C□□; d=40
GFL07-2M S□□ 160C□□; d=50
GFL11-2M S□□ 225C□□; d=80

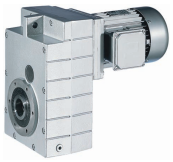

Hollow shaft with shrink disc

► Ensure that the strength of the machine shaft material is adequate in shrink disc designs.
When using typical steels, e.g. C45, 42CrMo4, the torques listed in the selection tables can be used without restriction.
Please consult us if you wish to use material that is considerably weaker. Medium surface roughness Rz must not exceed 15 µm (turning is sufficient).

Combination options with shrink disc in position 1 (drive end)

GFL□□-2M

Gearbox	Motor frame size
GFL04	
GFL05	063 [1)] 071 [1)]
GFL06	063 071 080 090 [1)] 100 [1)]
GFL07	080 090 100 112 [1)]
GFL09	090 100 112 132
GFL11	100 112 132 160 180 225
GFL14	112 132 160 180 225

[1)] Only possible without cover

► For geared motors GFL□□-2M/E S... with shrink disc position 1: terminal box position / motec position 4 not possible!

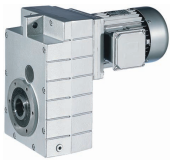

Mounting set for hollow shaft circlip:
Proposed design for auxiliary tools

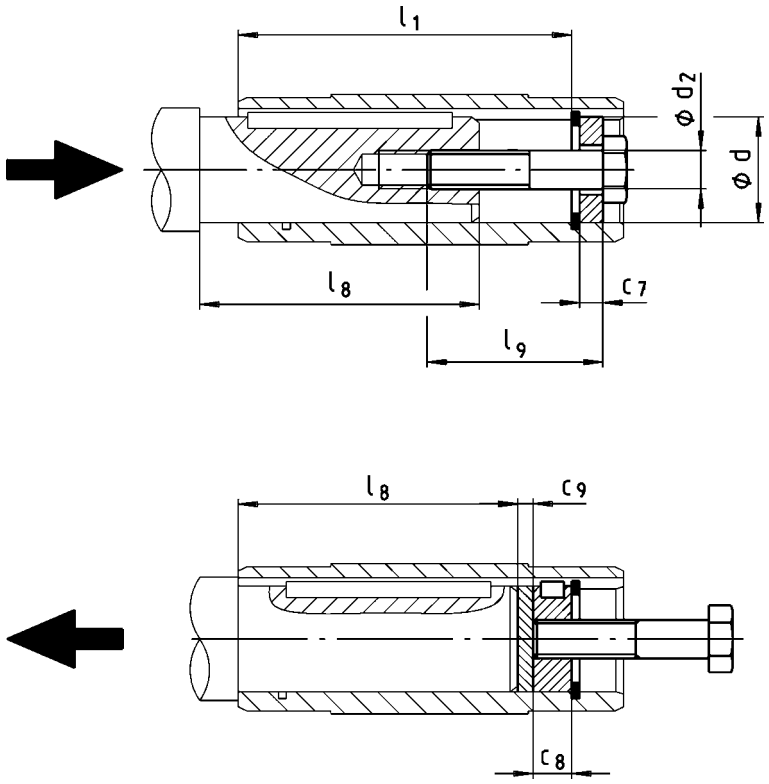

	d	l_1	d_2	l_9	c_7	c_8	c_9	$l_{8,\,max}$
	H7							
GFL04	25 30	100	M10	40	5	10	3	85
					6			
GFL05	30 35	124						107
			M12	50	7	12		
GFL06	40 45	140	M16	60	8	16	4	118
					9			
GFL07	50 55	175			10		5	148
			M20	80	11	20		
GFL09	60 70	210			13			182
					14			
GFL11	70 80	250					6	221
					16			
GFL14	100	305	M24	100	20	24	8	270

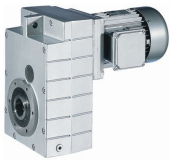

Foot mounting in position 3

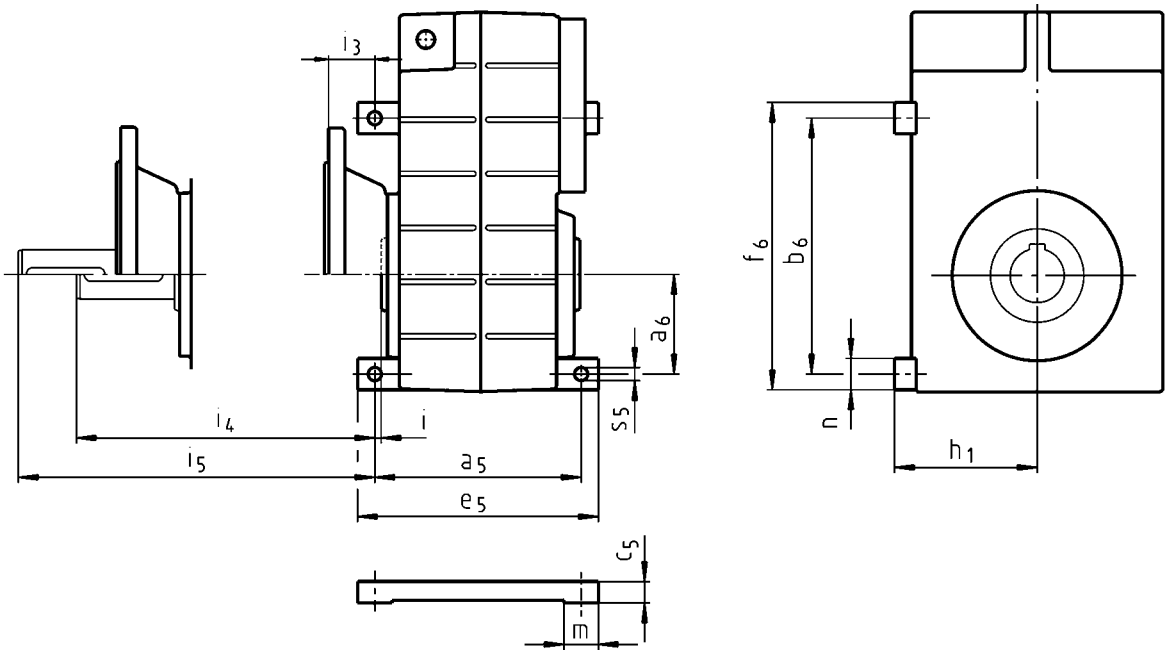

	a_5	a_6	b_6	c_5	e_5	f_6	h_1	i	i_3	i_4	i_5	m	n	s_5
GFL04	130	47	115	18	152	140	90	4.5	28.5	45.5	78.5	22	25	6.6
GFL05	160	65	167	21	185	192	100	2.0	31.0	58.0	91.0	25		9.0
GFL06	175	80	205	27	205	233	125		39.0	78.0	119	30	28	11.0
GFL07	220	100	260	31	255	292	155	3.0	52.0	97.0	152	35	32	13.5
GFL09	260	125	335	36	300	375	190		57.0	117	177	40	40	17.5
GFL11	315	155	435	48	365	485	240			157	217	50	50	22.0
GFL14	375	200	540	57	430	600	295			197	257	55	60	26.0

Foot design is not available for the following combinations:
- GFL04: Motor frame size 090
- GFL05: Motor frame size 090
- GFL05: Motor frame size 100
- GFL06: Motor frame size 112
- GFL06: Motor frame size 132
- GFL07: Motor frame size 160

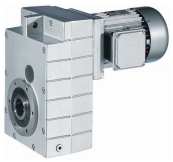

Foot mounting in position 4

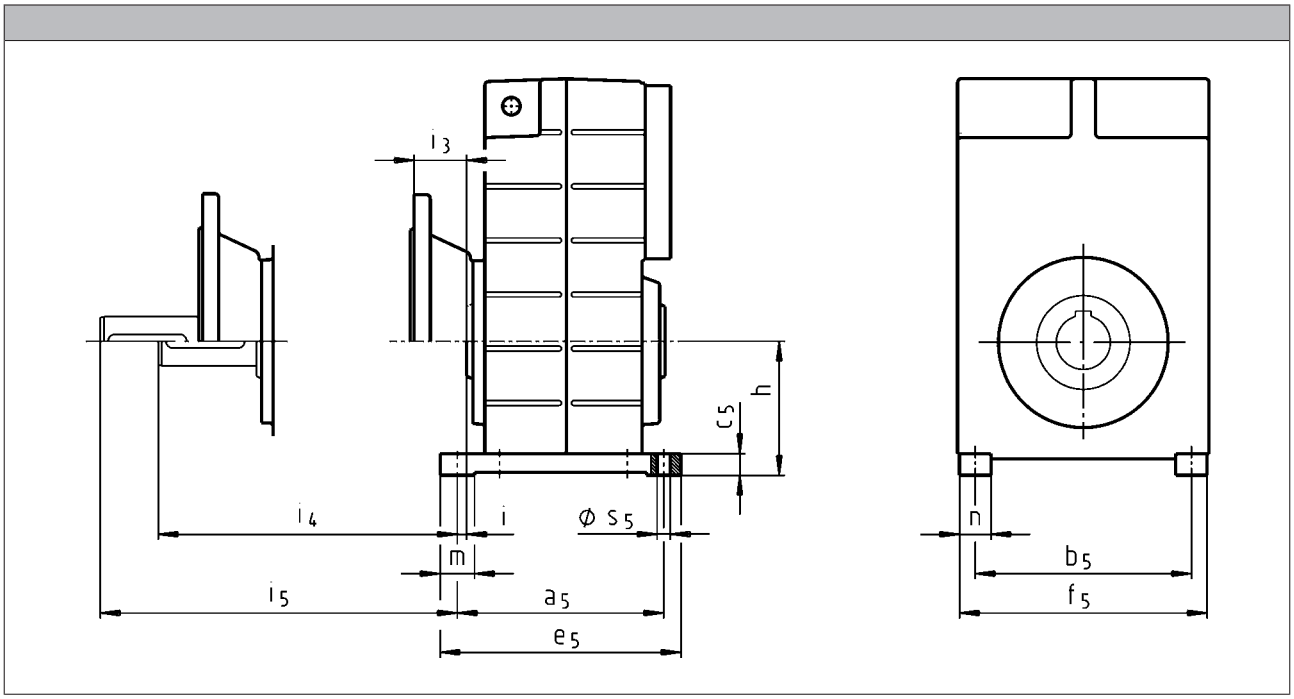

	a_5	b_5	c_5	e_5	f_5	h	i	i_3	i_4	i_5	m	n	s_5
GFL04	130	108	18	152	133.0	85	4.5	28.5	45.5	78.5	22	25	6.6
GFL05	160	140	21	185	165.0	95	2.0	31.0	58.0	91.0	25		9.0
GFL06	175	175	27	205	203.0	120		39.0	78.0	119	30	28	11.0
GFL07	220	220	31	255	252.0	145	3.0	52.0	97.0	152	35	32	13.5
GFL09	260	275	36	300	315.0	180		57.0	117	177	40	40	17.5
GFL11	315	340	48	365	390.0	224			157	217	50	50	22.0
GFL14	375	425	57	430	485.0	278			197	257	55	60	26.0

► In mounting positions E and F, the oil check bore hole/oil-sight glass are located between the feet in position 4!

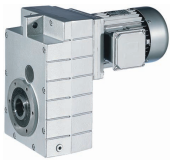

Rubber buffer for torque plate

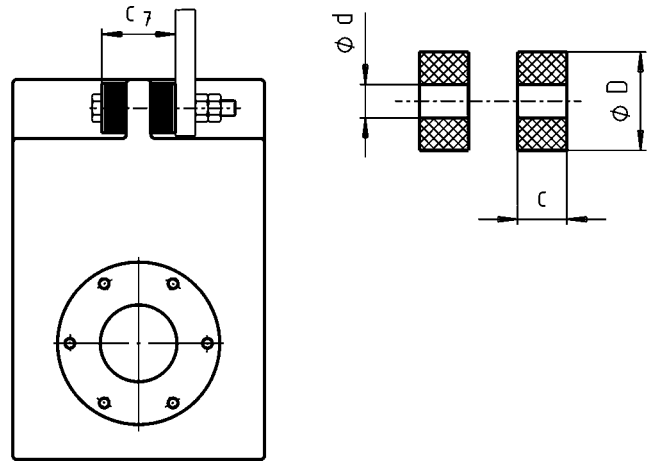

	d	D	c	c_7
GFL04	11	30	14.5	43
GFL05	11	30	14.5	45
GFL06	13	40	15.0	50
GFL07	17	50	27.0	79
GFL09	21	60	28.0	88
GFL11	26	72	29.0	98
GFL14	33	92	30.0	110

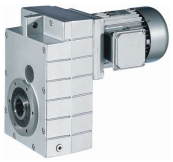

Ventilations

Position of ventilation, sealing elements and oil level check

GFL05...14-2

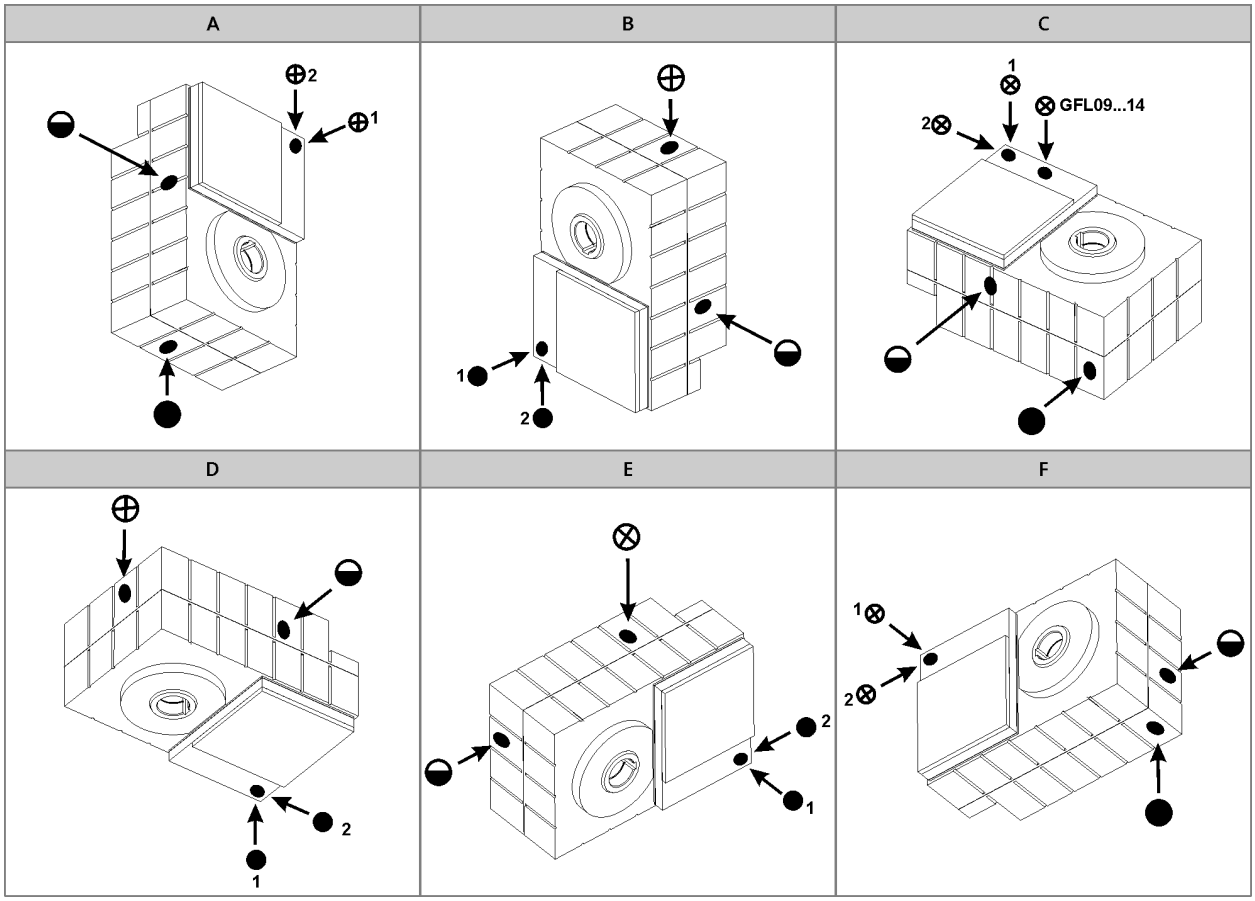

A to F Mounting position
⊗ Ventilation / Oil filler plug
● Oil drain plug
◒ Oil control plug
* On both sides
** On opposite side

Item 1 standard
Item 2 only with:
- GFL05-2M □□□ 090C□□
- GFL05-2M □□□ 100C□□
- GFL06-2M □□□ 112C□□
- GFL07-2M □□□ 160C□□

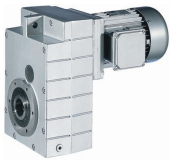

Ventilations

Position of ventilation, sealing elements and oil level check

GFL05...14-3

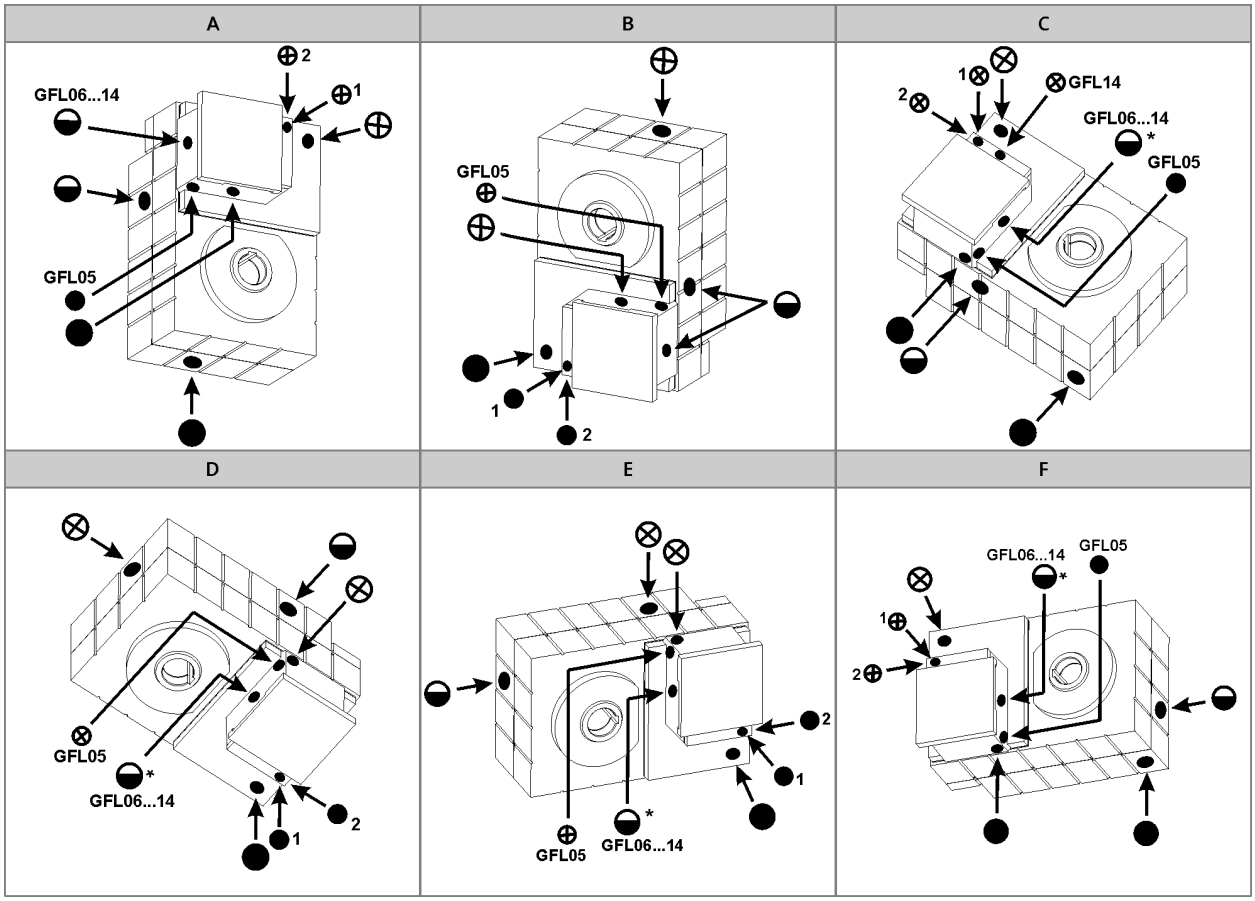

A to F Mounting position
⊗ Ventilation / Oil filler plug
● Oil drain plug
◒ Oil control plug
* On both sides
** On opposite side

Item 1 standard
Item 2 only with:
- GFL07-3M □□□ 090C□□
- GFL07-3M □□□ 100C□□
- GFL09-3M □□□ 112C□□

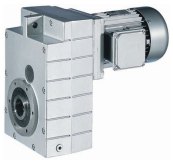

Ventilations

Compensation reservoir for mounting position C

GFL□□-2

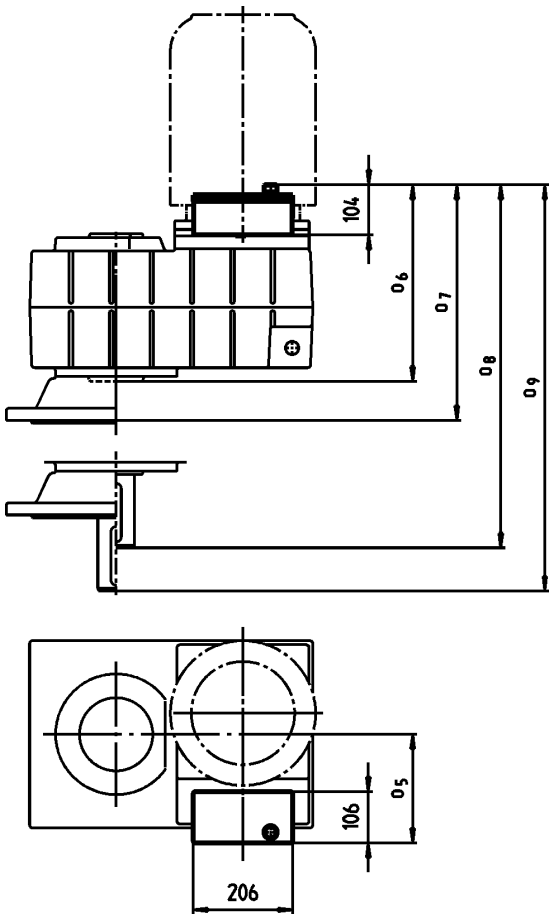

Motor	090 100					112				
	o_5	o_6	o_7	o_8	o_9	o_5	o_6	o_7	o_8	o_9
	[mm]	[mm]	[mm]	[mm]	[mm]	[mm]	[mm]	[mm]	[mm]	[mm]
GFL09	165	344	405	464	525	187	344	405	464	525
GFL11	154	387	448	547	608	176	391	452	551	612
GFL14						181	446	507	646	707

Motor	132					160 180 225				
	o_5	o_6	o_7	o_8	o_9	o_5	o_6	o_7	o_8	o_9
	[mm]	[mm]	[mm]	[mm]	[mm]	[mm]	[mm]	[mm]	[mm]	[mm]
GFL09	204	344	405	464	525	219	344	405	464	525
GFL11	200	391	452	551	612	214	391	452	551	612
GFL14	211	446	507	646	707	211	446	507	646	707

- Terminal box position 3 not permitted.
- Foot in position 3 not permitted.

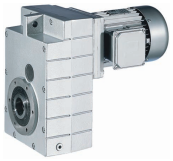

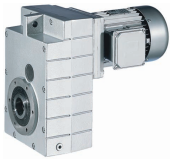

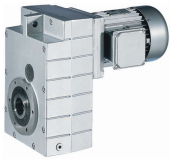

MD/MH three-phase AC motors

0.06 to 0.55 kW
0.75 to 45 kW (IE2)

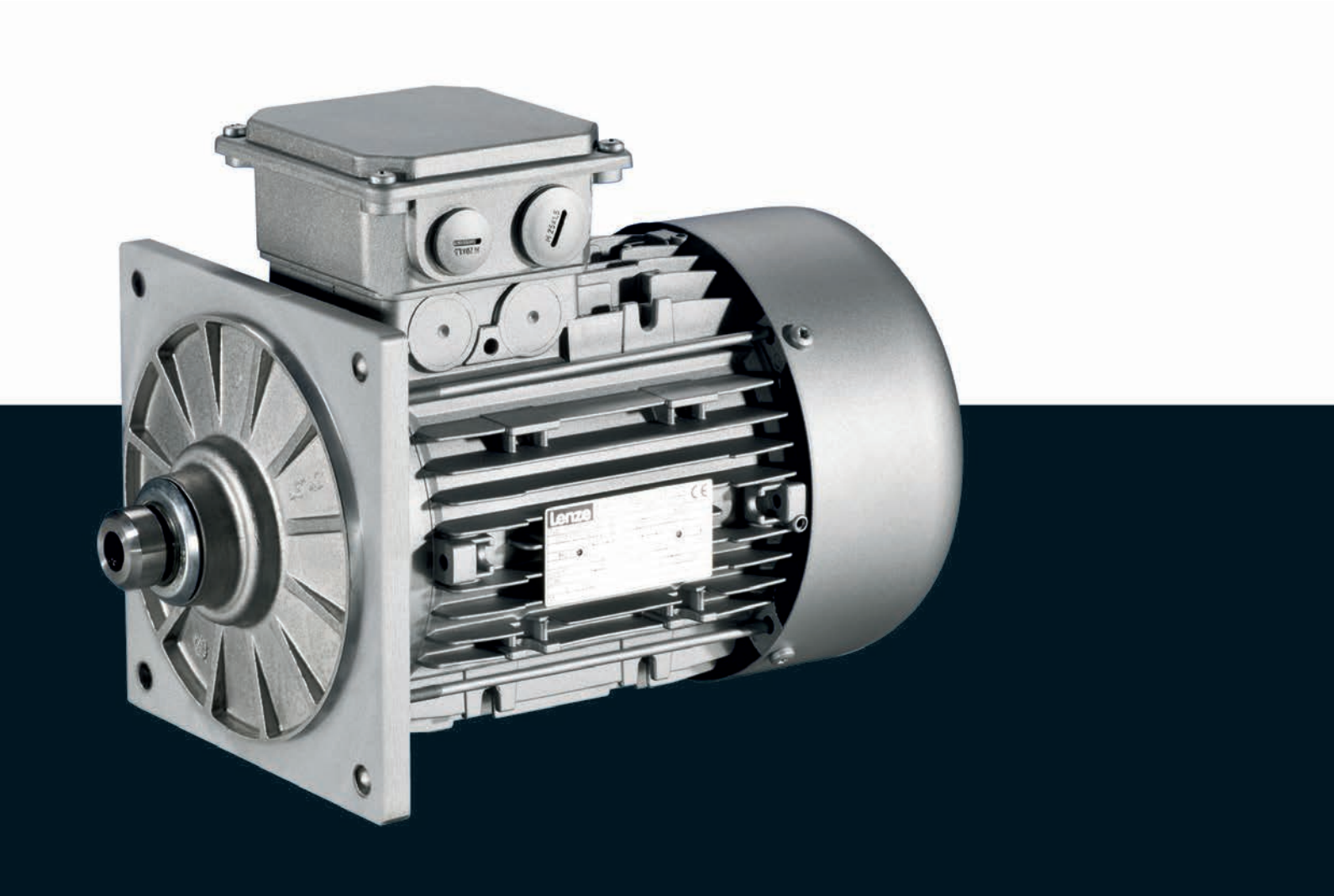

MD/MH three-phase AC motors

Contents

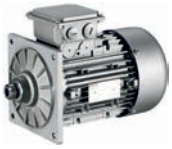

General information	List of abbreviations	6.11 - 4
	Product key	6.11 - 5
	Product information	6.11 - 6
	Functions and features	6.11 - 7
	Motor – inverter assignment	6.11 - 12
	Dimensioning	6.11 - 14
Technical data	Standards and operating conditions	6.11 - 15
	Rated data for 50 Hz	6.11 - 16
	Rated data for 60 Hz	6.11 - 19
	Rated data for 87 Hz	6.11 - 22
	Dimensions, self-ventilated (2-pole)	6.11 - 23
	Dimensions, self-ventilated (4-pole)	6.11 - 24
	Dimensions, self-ventilated (6-pole)	6.11 - 26
	Dimensions, forced ventilated (2-pole)	6.11 - 27
	Dimensions, forced ventilated (4-pole)	6.11 - 28
	Dimensions, forced ventilated (6-pole)	6.11 - 30
	Dimensions, 8400 motec inverter	6.11 - 31
Accessories	Spring-applied brake	6.11 - 33
	Resolver	6.11 - 47
	Incremental encoder and SinCos absolute value encoder	6.11 - 48
	Blowers	6.11 - 49
	Temperature monitoring	6.11 - 51
	Terminal box	6.11 - 53
	Plug connectors	6.11 - 60
	ICN connector	6.11 - 60
	M12 connector	6.11 - 71
	HAN connector	6.11 - 72
	Handwheel	6.11 - 78
	Centrifugal mass	6.11 - 80
	2nd shaft end	6.11 - 81
	Protection cover	6.11 - 83

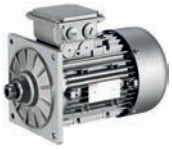

List of abbreviations

$\eta_{100\,\%}$	[%]	Efficiency
$\eta_{75\,\%}$	[%]	Efficiency
$\eta_{50\,\%}$	[%]	Efficiency
cos ϕ		Power factor
I_N	[A]	Rated current
I_{max}	[A]	Max. current consumption
J	[kgcm²]	Moment of inertia
m	[kg]	Mass
M_a	[Nm]	Starting torque
M_b	[Nm]	Stalling torque
M_{max}	[Nm]	Max. torque
M_N	[Nm]	Rated torque
n_N	[r/min]	Rated speed
P_N	[kW]	Rated power
P_{max}	[kW]	Max. power input

U_{max}	[V]	Max. mains voltage
U_{min}	[V]	Min. mains voltage
$U_{N,\Delta}$	[V]	Rated voltage
$U_{N,Y}$	[V]	Rated voltage

CE	Communauté Européenne
CSA	Canadian Standards Association
DIN	Deutsches Institut für Normung e.V.
EMC	Electromagnetic compatibility
EN	European standard
IEC	International Electrotechnical Commission
IM	International Mounting Code
IP	International Protection Code
NEMA	National Electrical Manufacturers Association
UL	Underwriters Laboratory Listed Product
UR	Underwriters Laboratory Recognized Product
VDE	Verband deutscher Elektrotechniker (Association of German Electrical Engineers)
CCC	China Compulsory Certificate
GOST	Certificate for Russian Federation
cURus	Combined certification marks of UL for the USA and Canada
UkrSEPRO	Certificate for Ukraine



Product key

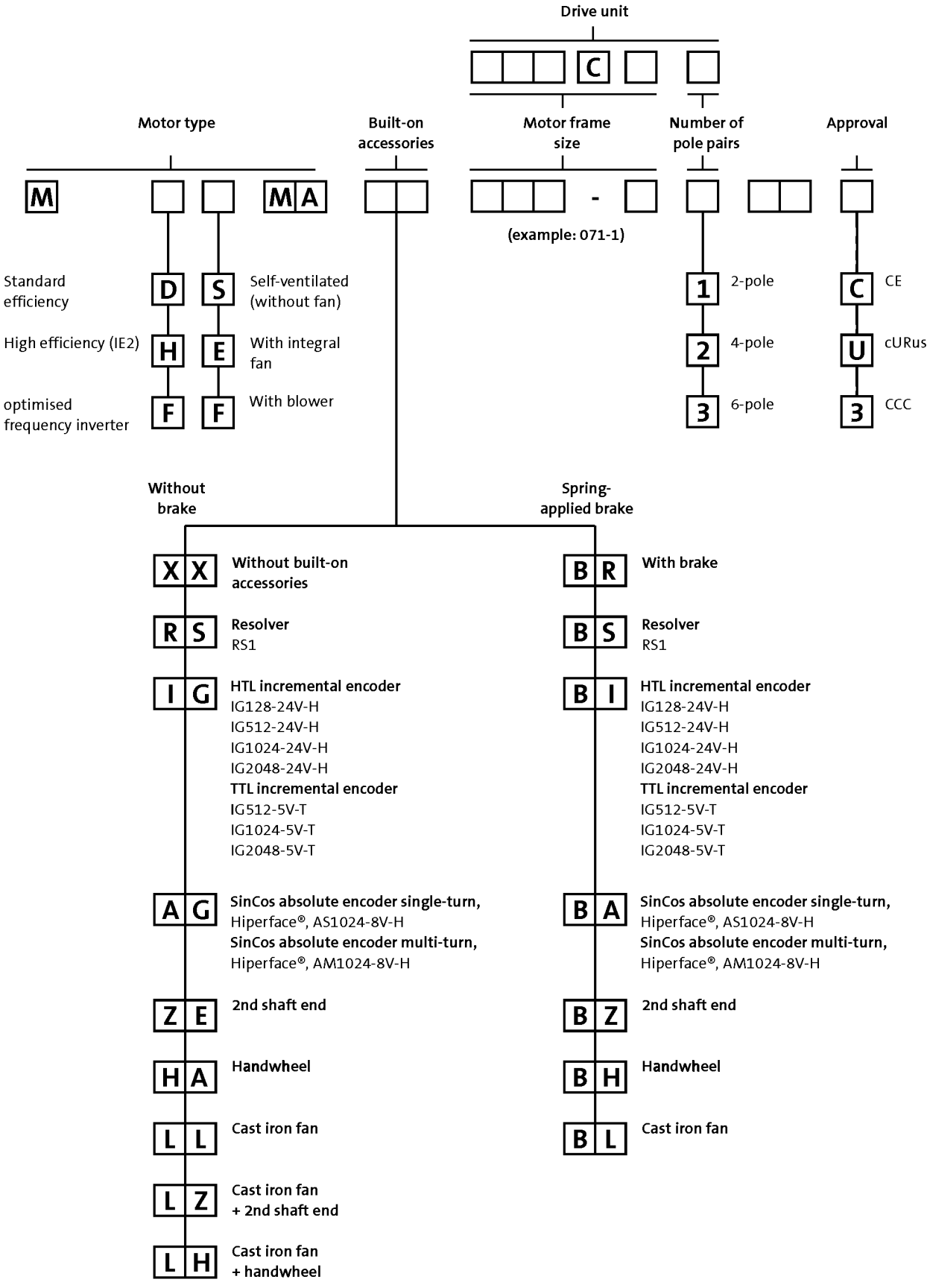
Drive unit
C
Motor type
Built-on accessories
Motor frame size
Number of pole pairs
Approval
M
M A
-
(example: 071-1)
Standard efficiency
D
S
Self-ventilated (without fan)
High efficiency (IE2)
H
E
With integral fan
optimised frequency inverter
F
F
With blower
1
2-pole
2
4-pole
3
6-pole
C
CE
U
cURus
3
CCC
Without brake
Spring-applied brake
X X
Without built-on accessories
B R
With brake
R S
Resolver
RS1
B S
Resolver
RS1
I G
HTL incremental encoder
IG128-24V-H
IG512-24V-H
IG1024-24V-H
IG2048-24V-H
TTL incremental encoder
IG512-5V-T
IG1024-5V-T
IG2048-5V-T
B I
HTL incremental encoder
IG128-24V-H
IG512-24V-H
IG1024-24V-H
IG2048-24V-H
TTL incremental encoder
IG512-5V-T
IG1024-5V-T
IG2048-5V-T
A G
SinCos absolute encoder single-turn,
Hiperface®, AS1024-8V-H
SinCos absolute encoder multi-turn,
Hiperface®, AM1024-8V-H
B A
SinCos absolute encoder single-turn,
Hiperface®, AS1024-8V-H
SinCos absolute encoder multi-turn,
Hiperface®, AM1024-8V-H
Z E
2nd shaft end
B Z
2nd shaft end
H A
Handwheel
B H
Handwheel
L L
Cast iron fan
B L
Cast iron fan
L Z
Cast iron fan
+ 2nd shaft end
L H
Cast iron fan
+ handwheel

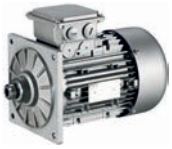

Product information

Special motors have been designed for direct attachment to Lenze gearboxes.

These motors are attached to the gearbox without the use of a clutch. Torque transmission between the toothing and the motor shaft is friction-locked via a tapered connection here.
This motor design means that the geared motors only require a small installation space.

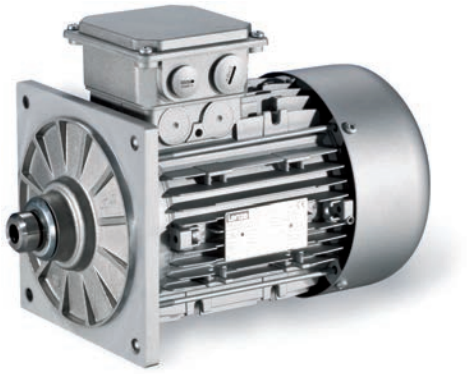

MD/MH L-force three-phase AC motors are available in a power range from 0.06 to 45 kW. From 0.75 kW, they comply with efficiency class IE2 (high efficiency) as per IEC 60034-30.
Since almost all IE2 motors are designed with the same dimensions as the standard efficiency motors, it is easy to switch between the two.
The energy efficiency of the L-force MH three-phase AC motors has been approved by Underwriters Laboratories (UL) as an independent third-party.

Basic versions
- The thermal sensors integrated as standard allow for permanent temperature monitoring and are coordinated to the motor winding's temperature class F (155°C).
- The motors of the basic version are adapted to ambient conditions by enclosure IP55.
- In tough operating conditions, the surface and corrosion protection system is provided to reliably protect the motor from corrosive media.

Options
- Various brake sizes – each available with several braking torques – can be combined with the three-phase AC motors.
- The LongLife version of the brake can easily reach 10 x 10^6 switching cycles.
- A resolver and various incremental and absolute value encoders can be fitted for speed and position detection.
- For fast commissioning, the motors are also available with connectors for the power connection, brake, blower and feedback.
- Instead of an integral fan, the motor can optionally be equipped with a blower. No torque reduction is then necessary, even at speeds below 20 Hz.
- For drive tasks in decentralised applications, the motor can be ordered with the motec inverter connected to the terminal box.
- The motors are available with cURus, GOST-R, CCC and UkrSepro approval.
- Smooth start/braking is possible by increasing the motor's centrifugal mass with a cast iron fan.
- The motor can be equipped with a handwheel for manual setup or emergency operations.
- To protect the fan from falling objects, the fan cover can be equipped with a protection cover.
- A 2nd shaft end is available for further modifications.



Functions and features

Size		
Motor	063	071
Spring-applied brake		
Design	Standard or LongLife design Reduced or standard braking torque With rectifier With manual release lever Low noise	
Feedback		
Design	Resolver Incremental encoder Absolute value encoder (multi-turn)	
Thermal sensor		
Thermal contact	TKO	
Thermal detector	KTY83-110 KTY84-130	
PTC thermistor	PTC	
Motor connection		
Power connection	Terminal box ICN connector HAN10E connector HAN modular connector	
Brake connection	Terminal box ICN connector HAN modular connector HAN10E connector	
Blower connection	Terminal box ICN connector	
Feedback connection	Terminal box ICN connector	
Temperature sensor connection	Terminal box TKO or PTC at connector in the power connection KTY at connector in the feedback connection	
Shaft bearings		
Position of the locating bearing	Standard motors (B3, B5, B14): side B Motors for gearbox direct mounting: side A	
Bearing type	Deep-groove ball bearing with high-temperature resistant grease, 2 sealing discs or cover plates	
Colour		
	Not coated Primed Paint in various corrosion-protection designs in accordance with RAL colours	
Further options		
	Protection cover	Protection cover Increased centrifugal mass Handwheel 2nd shaft end

[1] With 2-pole motors not available.

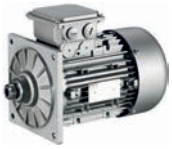

Functions and features

Size			
Motor	080	090	100
Spring-applied brake			
Design	Standard or LongLife design Reduced, standard or increased braking torque With rectifier With manual release lever Low noise		
Feedback			
Design	Resolver Incremental encoder Absolute value encoder (multi-turn)		
Thermal sensor			
Thermal contact	TKO		
Thermal detector	KTY83-110 KTY84-130		
PTC thermistor	PTC		
Motor connection			
Power connection	Terminal box ICN connector HAN10E connector HAN modular connector		
Brake connection	Terminal box ICN connector HAN modular connector HAN10E connector		
Blower connection	Terminal box ICN connector		
Feedback connection	Terminal box ICN connector		
Temperature sensor connection	Terminal box TKO or PTC at connector in the power connection KTY at connector in the feedback connection		
Shaft bearings			
Position of the locating bearing	Standard motors (B3, B5, B14): side B Motors for gearbox direct mounting: side A		
Bearing type	Deep-groove ball bearing with high-temperature resistant grease, 2 sealing discs or cover plates		
Colour			
	Not coated Primed Paint in various corrosion-protection designs in accordance with RAL colours		
Further options			
	Protection cover Increased centrifugal mass Handwheel 2nd shaft end		



Functions and features

Size			
Motor	112	132	160
Spring-applied brake			
Design	Standard design Reduced, standard or increased braking torque With rectifier With manual release lever Low noise		
Feedback			
Design	Resolver Incremental encoder Absolute value encoder (multi-turn)		
Thermal sensor			
Thermal contact	TKO		
Thermal detector	KTY83-110 KTY84-130		
PTC thermistor	PTC		
Motor connection			
Power connection	Terminal box ICN connector HAN10E connector HAN modular connector	Terminal box ICN connector HAN modular connector	Terminal box HAN modular connector
Brake connection	Terminal box ICN connector HAN modular connector HAN10E connector	Terminal box ICN connector HAN modular connector	Terminal box HAN modular connector
Blower connection	Terminal box ICN connector		
Feedback connection	Terminal box ICN connector		
Temperature sensor connection	Terminal box TKO or PTC at connector in the power connection KTY at connector in the feedback connection		
Shaft bearings			
Position of the locating bearing	Standard motors (B3, B5, B14): side B Motors for gearbox direct mounting: side A		
Bearing type	Deep-groove ball bearing with high-temperature resistant grease, 2 sealing discs or cover plates		
Colour			
	Not coated Primed Paint in various corrosion-protection designs in accordance with RAL colours		
Further options			
	Protection cover Increased centrifugal mass Handwheel 2nd shaft end		Protection cover

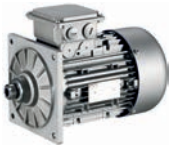

Functions and features

Size			
Motor	180	200	225
Spring-applied brake			
Design	Standard design Reduced, standard or increased braking torque With rectifier With manual release lever Low noise		
Feedback			
Design	Resolver Incremental encoder Absolute value encoder (multi-turn)		
Thermal sensor			
Thermal contact	TKO		
Thermal detector	KTY83-110 KTY84-130		
PTC thermistor	PTC		
Motor connection			
Power connection	Terminal box		
Brake connection	Terminal box		
Blower connection	Terminal box ICN connector		
Feedback connection	Terminal box ICN connector		
Temperature sensor connection	Terminal box		
Shaft bearings			
Position of the locating bearing	Standard motors (B3, B5, B14): side B Motors for gearbox direct mounting: side A		Drive end
Bearing type	Deep-groove ball bearing with high-temperature resistant grease, 2 sealing discs or cover plates		
Colour			
	Not coated Primed Paint in various corrosion-protection designs in accordance with RAL colours		
Further options			



Functions and features

Surface and corrosion protection

For optimum protection of three-phase AC motors against ambient conditions, the surface and corrosion protection system (OKS) offers tailor-made solutions.

Various surface coatings ensure that the motors operate reliably even at high air humidity, in outdoor installation or in the presence of atmospheric impurities. Any colour from the RAL Classic collection can be chosen for the top coat. The three-phase AC motors are also available unpainted (no surface and corrosion protection).

Surface and corrosion protection system	Applications	Measures
OKS-G (primed)	• Dependent on subsequent top coat applied	• 2K PUR priming coat (grey)
OKS-S (small)	• Standard applications • Internal installation in heated buildings • Air humidity up to 90%	• Surface coating as per corrosivity category C1 (in line with EN 12944-2)
OKS-M (medium)	• Internal installation in non-heated buildings • Covered, protected external installation • Air humidity up to 95%	• Surface coating as per corrosivity category C2 (in line with EN 12944-2)
OKS-L (high)	• External installation • Air humidity above 95% • Chemical industry plants • Food industry	• Surface coating as per corrosivity category C3 (in line with EN 12944-2) • Blower cover and B end shield additionally primed • Screws zinc-coated • Cable glands with gaskets • Corrosion-resistant brake with cover ring, stainless friction plate, and chrome-plated armature plate (on request) Optional measures: • Motor recesses sealed off (on request)

Structure of surface coating

Surface and corrosion protection system	Corrosivity category	Surface coating	Colour
	DIN EN ISO 12944-2	Structure	
Without OKS (uncoated)			
OKS-G (primed)		2K PUR priming coat	
OKS-S (small)	C1	2K-PUR top coat	Standard: RAL 7012 Optional: RAL Classic
OKS-M (medium)	C2	2K PUR priming coat 2K-PUR top coat	
OKS-L (high)	C3		

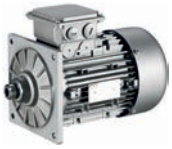

Motor – inverter assignment

Rated frequency 50/60 Hz

- ► Decentralised inverter 8400 motec (E84DVB)
- ► Inverter Drives 8400 (E84AV)

Rated power	Product key		
	Motor	Inverter	
P_N			
[kW]			
0.12	MD□□□□□063-12		
0.18	MD□□□□□063-32		
0.25	MD□□□□□063-42 MD□□□□□071-12		
0.37	MD□□□□□071-32	E84DVB□3714S□□□2□	
0.55	MD□□□□□071-42 MD□□□□□080-12	E84DVB□5514S□□□2□	
0.75	MH□□□□□080-32	E84DVB□7514S□□□2□	
1.10	MH□□□□□090-12	E84DVB□1124S□□□2□	
1.50	MH□□□□□090-32	E84DVB□1524S□□□2□	
2.20	MH□□□□□100-12	E84DVB□2224S□□□2□	
3.00	MH□□□□□100-32	E84DVB□3024S□□□2□	
4.00	MH□□□□□112-22	E84DVB□4024S□□□2□	
5.50	MH□□□□□132-12	E84DVB□5524S□□□2□	
7.50	MH□□□□□132-22	E84DVB□7524S□□□2□	
11.0	MH□□□□□160-22		
15.0	MH□□□□□160-32		
18.5	MH□□□□□180-12		
22.0	MH□□□□□180-32		
30.0	MH□□□□□200-32		
37.0	MH□□□□□225-12		
45.0	MH□□□□□225-22		

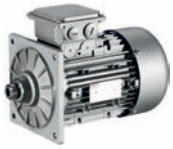

Motor – inverter assignment

Rated frequency 87 Hz

- Decentralised inverter 8400 motec (E84DVB)
- Inverter Drives 8400 (E84AV)

Rated power	Product key		
	Motor	Inverter	
P_N			
[kW]			
0.21	MD□□□□□063-12	E84DVB□5514S□□□2□	
0.33	MD□□□□□063-32		
0.45	MD□□□□□063-42 MD□□□□□071-12		
0.66	MD□□□□□071-32	E84DVB□7514S□□□2□	
1.00	MD□□□□□071-42 MD□□□□□080-12	E84DVB□1124S□□□2□	
1.35	MH□□□□□080-32	E84DVB□1524S□□□2□	
2.00	MH□□□□□090-12	E84DVB□2224S□□□2□	
2.70	MH□□□□□090-32	E84DVB□3024S□□□2□	
3.90	MH□□□□□100-12	E84DVB□4024S□□□2□	
5.40	MH□□□□□100-32	E84DVB□5524S□□□2□	
7.10	MH□□□□□112-22	E84DVB□7524S□□□2□	
9.70	MH□□□□□132-12		
13.2	MH□□□□□132-22		
19.4	MH□□□□□160-22		
26.4	MH□□□□□160-32		
32.5	MH□□□□□180-12		

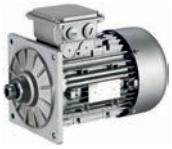

Dimensioning

Torque derating at low motor frequencies

Motor size-dependent torque reduction, taking into account the thermal response during operation on the inverter.

Torque characteristics

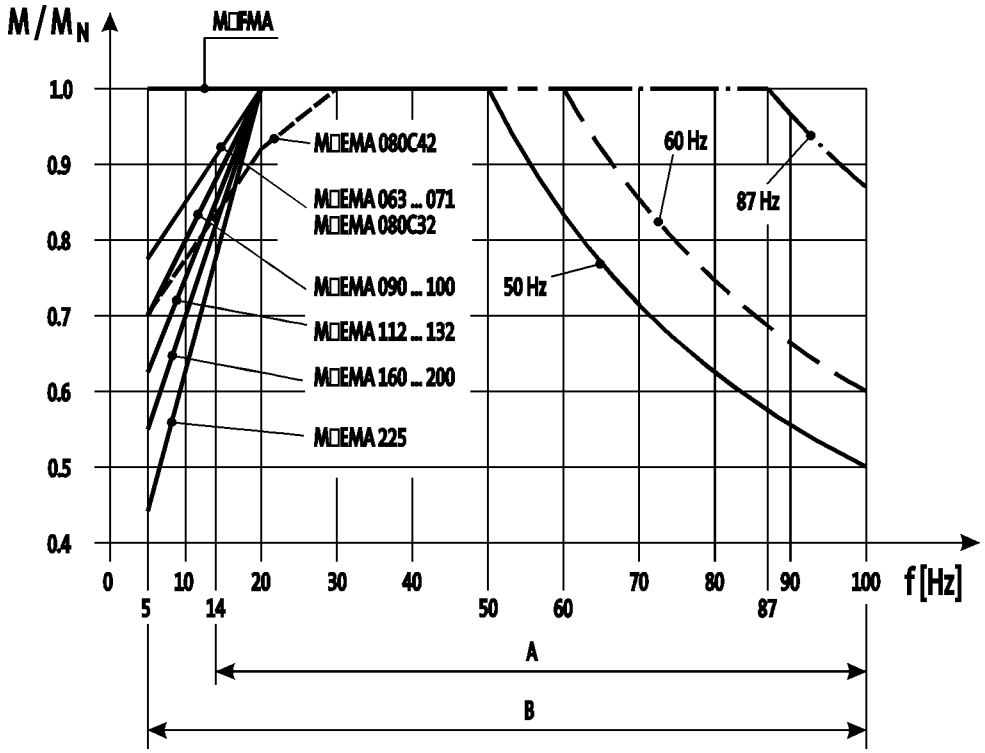

A = Operation with integral fan and brake
B = Operation with integral fan and brake control "Holding current reduction"

► The motor specifications stated in this catalogue for inverter operation apply to operation with a Lenze inverter. If you are uncertain, get in touch with the manufacturer of the inverter to ask whether the device is capable of driving the motor with the stated specifications (e.g. setting range, base frequency).

You can use the Drive Solution Designer for precise drive dimensioning.

The Drive Solution Designer helps you to carry out a fast and high-quality drive dimensioning.
The software includes well-founded and proven knowledge on drive applications and electro-mechanical drive components.

Please contact your Lenze sales office.



Standards and operating conditions

Enclosure			
EN 60529			IP55
Energy efficiency class			
IEC 60034-30			IE2
IEC 60034-2-1			Methodology for measuring efficiency
Approval			
Class			cURus/UL Energy-verified [1)] CCC GOST-R UkrSepro
Temperature class			
IEC/EN 60034-1; utilisation			B
IEC/EN 60034-1; insulation system (enamel-insulated wire)			F
Min. ambient operating temperature			
	$T_{opr,min}$	[°C]	-20
Max. ambient operating temperature			
	$T_{opr,max}$	[°C]	40
With power reduction	$T_{opr,max}$	[°C]	60
Site altitude			
Amsl	H_{max}	[m]	4000
Max. speed			
	n_{max}	[r/min]	4500

[1)] Motor frame size 225, in preparation.

► In the European Union, the ErP Directive stipulates minimum efficiency levels for three-phase AC motors. Geared three-phase AC motors that do not conform with this Directive do not meet CE requirements and must not be marketed in the European Economic Area. For further information about the ErP Directive and the Lenze products to which it relates, please refer to the brochure entitled "International efficiency directives for three-phase AC motors".

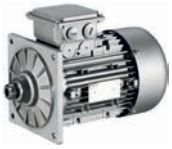

Rated data for 50 Hz

2-pole motors

	P_N	n_N	$U_{N,\Delta}$	$I_{N,\Delta}$	$U_{N,Y}$	$I_{N,Y}$	I_a/I_N
			± 10 %		± 10 %		
	[kW]	[r/min]	[V]	[A]	[V]	[A]	
MD□□□□□063-11	0.18	2740	230	0.80	400	0.46	4.30
MD□□□□□063-31	0.25	2710	230	1.10	400	0.60	3.70
MD□□□□□071-11	0.37	2720	230	1.50	400	0.90	4.40
MD□□□□□071-31	0.55	2630	230	2.40	400	1.40	3.80

	M_N	M_a	M_b	cos ϕ	$\eta_{75\,\%}$	$\eta_{100\,\%}$	J [1]	m [1]
	[Nm]	[Nm]	[Nm]		[%]	[%]	[kgcm²]	[kg]
MD□□□□□063-11	0.63	1.50	1.50	0.88	66.5	66.0	1.70	3.90
MD□□□□□063-31	0.90	1.90	2.00	0.89	67.0	66.0	1.70	3.80
MD□□□□□071-11	1.29	3.10	2.90	0.92	71.0	69.0	5.10	6.00
MD□□□□□071-31	2.00	3.80	4.20	0.93	70.0	63.0	5.10	6.50

4-pole motors

	P_N	n_N	$U_{N,\Delta}$ [2]	$I_{N,\Delta}$	$U_{N,Y}$	$I_{N,Y}$	I_a/I_N
			± 10 %		± 10 %		
	[kW]	[r/min]	[V]	[A]	[V]	[A]	
MD□□□□□063-02	0.060	1425	230	0.42	400	0.24	3.50
MD□□□□□063-22	0.090	1375	230	0.48	400	0.28	2.90
MD□□□□□063-12	0.12	1425	230	0.85	400	0.49	3.10
MD□□□□□063-32	0.18	1365	230	1.00	400	0.58	2.70
MD□□□□□063-42	0.25	1370	230	1.40	400	0.82	2.90
MD□□□□□071-32	0.37	1410	230	1.60	400	0.95	3.30
MD□□□□□071-42	0.55	1405	230	2.40	400	1.40	3.50

	M_N	M_a	M_b	cos ϕ	$\eta_{75\,\%}$	$\eta_{100\,\%}$	J [1]	m [1]
	[Nm]	[Nm]	[Nm]		[%]	[%]	[kgcm²]	[kg]
MD□□□□□063-02	0.40	1.30	1.36	0.57	59.0	63.0	3.30	3.90
MD□□□□□063-22	0.63	1.30	1.39	0.71	63.0	65.0	3.30	3.90
MD□□□□□063-12	0.80	2.50	2.64	0.56	58.0	63.0	3.30	4.10
MD□□□□□063-32	1.26	2.50	2.61	0.70	63.0	64.0	3.30	4.10
MD□□□□□063-42	1.74	3.80	4.10	0.67	65.0	66.0	3.70	4.40
MD□□□□□071-32	2.51	4.76	5.81	0.77	73.0	73.0	10.7	5.80
MD□□□□□071-42	3.74	7.85	9.12	0.77	74.0	74.0	12.8	6.40

[1] Without accessories

[2] Operation at 87 Hz is possible with 4-pole motors whose rated data at 50 Hz displays the voltage values Δ 230 V.
With motor frame sizes 132-12 to 225-22, the required voltage must also be specified in your order.



Rated data for 50 Hz

4-pole motors

	P_N	n_N	$U_{N,\Delta}$ [2]	$I_{N,\Delta}$	$U_{N,Y}$	$I_{N,Y}$	I_a/I_N
			± 10 %		± 10 %		
	[kW]	[r/min]	[V]	[A]	[V]	[A]	
MH□□□□□080-32	0.75	1410	230	3.10	400	1.80	5.00
MH□□□□□090-12	1.10	1430	230	4.60	400	2.70	5.40
MH□□□□□090-32	1.50	1435	230	5.80	400	3.30	6.30
MH□□□□□100-12	2.20	1445	230	8.60	400	5.00	6.00
MH□□□□□100-32	3.00	1445	230	12.1	400	7.00	6.50
MH□□□□□112-22	4.00	1455	230	14.5	400	8.40	6.00
MH□□□□□132-12	5.50	1470	230 400 [3]	20.6 11.9	400	11.9	6.10
MH□□□□□132-22	7.50	1460	230 400 [3]	27.0 15.6	400	15.6	8.50
MH□□□□□160-22	11.0	1470	230 400 [3]	37.7 21.8	400	21.8	8.00
MH□□□□□160-32	15.0	1470	230 400 [3]	50.3 29.1	400	29.1	8.20
MH□□□□□180-12	18.5	1475	230 400 [3]	58.8 34.0	400	34.0	8.40
MH□□□□□180-32	22.0	1470	230 400 [3]	68.9 39.8	400	39.8	7.80
MH□□□□□180-42	30.0	1465	230 400 [3]	93.8 53.9	400	53.9	7.00
MH□□□□□225-12	37.0	1483	230 400 [3]	113 65.0	400	65.0	7.50
MH□□□□□225-22	45.0	1480	230 400 [3]	137 79.0	400	79.0	7.60

	M_N	M_a	M_b	cos ϕ	$\eta_{50\,\%}$	$\eta_{75\,\%}$	$\eta_{100\,\%}$	J [1]	m [1]
	[Nm]	[Nm]	[Nm]		[%]	[%]	[%]	[kgcm²]	[kg]
MH□□□□□080-32	5.08	12.0	12.1	0.84	74.9	79.6	79.6	28.0	11.0
MH□□□□□090-12	7.35	20.3	24.2	0.76	77.4	81.6	82.0	32.0	16.0
MH□□□□□090-32	10.0	33.0	34.0	0.76	82.2	83.4	82.8	36.0	18.0
MH□□□□□100-12	14.5	48.0	55.0	0.80	85.4	86.7	86.3	61.0	24.0
MH□□□□□100-32	19.8	67.0	76.0	0.73	83.8	85.6	85.5	66.0	26.5
MH□□□□□112-22	26.3	81.0	100	0.80	86.3	88.2	88.3	135	38.0
MH□□□□□132-12	35.7	90.0	108	0.77	88.2	89.3	89.2	290	59.0
MH□□□□□132-22	49.1	110	175	0.79	87.6	88.9	88.7	336	66.0
MH□□□□□160-22	71.5	164	243	0.82	89.4	90.0	89.8	570	109
MH□□□□□160-32	97.4	224	292	0.82	90.2	90.8	90.6	760	124
MH□□□□□180-12	120	359	371	0.86	90.8	91.4	91.2	1390	175
MH□□□□□180-32	143	400	372	0.87	91.4	92.0	91.6	1440	180
MH□□□□□180-42	196	469	528	0.87	91.9	92.5	92.3	1850	200
MH□□□□□225-12	238	620	620	0.87	94.0	94.6	94.3	4610	395
MH□□□□□225-22	290	698	669	0.88	93.7	94.5	94.3	5300	415

[1] Without accessories
[2] Operation at 87 Hz is possible with 4-pole motors whose rated data at 50 Hz displays the voltage values Δ 230 V.
With motor frame sizes 132-12 to 225-22, the required voltage must also be specified in your order.
[3] Star/delta start-up possible at 400 V.

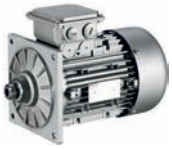

Rated data for 50 Hz

6-pole motors

	P_N	n_N	$U_{N,\Delta}$	$I_{N,\Delta}$	$U_{N,Y}$	$I_{N,Y}$	I_a/I_N
			± 10 %		± 10 %		
	[kW]	[r/min]	[V]	[A]	[V]	[A]	
MD□□□□□071-13	0.18	930	230	1.10	400	0.60	3.90
MD□□□□□071-33	0.25	930	230	1.80	400	1.10	2.80
MD□□□□□080-13	0.37	950	230	2.20	400	1.30	4.00
MD□□□□□080-33	0.55	930	230	2.90	400	1.70	3.50

	M_N	M_a	M_b	cos ϕ	$\eta_{75\,\%}$	$\eta_{100\,\%}$	J [1]	m [1]
	[Nm]	[Nm]	[Nm]		[%]	[%]	[kgcm²]	[kg]
MD□□□□□071-13	1.80	5.00	5.00	0.66	67.0	69.0	12.5	6.50
MD□□□□□071-33	2.50	6.60	6.60	0.66	67.0	68.0	12.5	6.50
MD□□□□□080-13	3.70	10.1	10.7	0.63	68.0	69.0	26.0	11.0
MD□□□□□080-33	5.60	12.2	12.8	0.70	68.0	68.0	26.0	11.0

[1] Without accessories



Rated data for 60 Hz

- The motors are designed for an operation at 265/460 V but are also able to be operated at 230 V, 60 Hz. The same technical data apply, the starting torque is a bit lower.
- The motors have a service factor of 1.15 at 60 Hz. The service factor indicates the permissible overload during operation within the mains voltage fluctuations.

2-pole motors

	P_N	n_N	$U_{N,\Delta}$	$I_{N,\Delta}$	$U_{N,Y}$	$I_{N,Y}$	I_a/I_N
			± 10 %		± 10 %		
	[kW]	[r/min]	[V]	[A]	[V]	[A]	
MD□□□□□063-11	0.18	3370	265	0.72	460	0.41	5.50
MD□□□□□063-31	0.25	3390	265	0.88	460	0.51	4.80
MD□□□□□071-11	0.37	3360	265	1.30	460	0.76	5.50
MD□□□□□071-31	0.55	3240	265	2.10	460	1.20	4.80

	M_N	M_a	M_b	cos ϕ	$\eta_{75\,\%}$	$\eta_{100\,\%}$	J [1]	m [1]
	[Nm]	[Nm]	[Nm]		[%]	[%]	[kgcm²]	[kg]
MD□□□□□063-11	0.51	1.38	1.38	0.84	68.3	67.8	1.70	3.90
MD□□□□□063-31	0.72	1.74	1.84	0.86	71.1	70.0	1.70	3.80
MD□□□□□071-11	1.05	2.85	2.66	0.91	74.4	72.3	5.10	6.00
MD□□□□□071-31	1.62	3.49	3.86	0.90	73.6	66.3	5.10	6.50

4-pole motors

	P_N	n_N	$U_{N,\Delta}$ [2]	$I_{N,\Delta}$	$U_{N,Y}$	$I_{N,Y}$	I_a/I_N
			± 10 %		± 10 %		
	[kW]	[r/min]	[V]	[A]	[V]	[A]	
MD□□□□□063-02	0.060	1735	265	0.37	460	0.21	4.40
MD□□□□□063-22	0.090	1695	265	0.43	460	0.25	4.20
MD□□□□□063-12	0.12	1735	265	0.69	460	0.40	4.00
MD□□□□□063-32	0.18	1695	265	0.80	460	0.46	3.60
MD□□□□□063-42	0.25	1680	265	1.30	460	0.75	3.80
MD□□□□□071-32	0.37	1720	265	1.50	460	0.84	3.90
MD□□□□□071-42	0.55	1720	265	2.10	460	1.20	4.10

	M_N	M_a	M_b	cos ϕ	$\eta_{75\,\%}$	$\eta_{100\,\%}$	J [1]	m [1]
	[Nm]	[Nm]	[Nm]		[%]	[%]	[kgcm²]	[kg]
MD□□□□□063-02	0.33	1.10	1.36	0.54	60.0	63.0	3.30	3.90
MD□□□□□063-22	0.51	1.10	1.40	0.67	64.9	67.0	3.30	3.90
MD□□□□□063-12	0.66	2.25	2.64	0.55	58.0	63.0	3.30	4.10
MD□□□□□063-32	1.00	2.21	2.56	0.68	65.0	66.0	3.30	4.10
MD□□□□□063-42	1.40	3.71	4.20	0.60	64.0	66.0	3.70	4.40
MD□□□□□071-32	2.05	4.40	5.80	0.74	74.0	75.0	10.7	5.80
MD□□□□□071-42	3.05	7.00	9.00	0.73	76.0	77.0	12.8	6.40

[1] Without accessories
[2] Operation at 87 Hz is possible with 4-pole motors whose rated data at 60 Hz displays the voltage values Δ 265 V.
With motor frame sizes 132-12 to 225-22, the required voltage must also be specified in your order.



Rated data for 60 Hz

4-pole motors

- The motors are designed for an operation at 265/460 V but are also able to be operated at 230 V, 60 Hz. The same technical data apply, the starting torque is a bit lower.
- The motors have a service factor of 1.15 at 60 Hz. The service factor indicates the permissible overload during operation within the mains voltage fluctuations.

	P_N	n_N	$U_{N,\Delta}$ [2]	$I_{N,\Delta}$	$U_{N,Y}$	$I_{N,Y}$	I_a/I_N
			± 10 %		± 10 %		
	[kW]	[r/min]	[V]	[A]	[V]	[A]	
MH□□□□□080-32	0.75	1720	265	2.80	460	1.60	5.80
MH□□□□□090-12	1.10	1740	265	4.00	460	2.30	6.50
MH□□□□□090-32	1.50	1745	265	5.10	460	3.00	7.20
MH□□□□□100-12	2.20	1750	265	7.70	460	4.40	6.90
MH□□□□□100-32	3.00	1755	265	10.6	460	6.10	7.70
MH□□□□□112-22	4.00	1760	265	12.8	460	7.40	7.00
MH□□□□□132-12	5.50	1775	265 460 [3]	18.0 10.4	460	10.4	7.10
MH□□□□□132-22	7.50	1765	265 460 [3]	24.2 14.0	460	14.0	9.70
MH□□□□□160-22	11.0	1775	265 460 [3]	32.5 18.7	460	18.7	9.40
MH□□□□□160-32	15.0	1775	265 460 [3]	44.1 24.5	460	24.5	9.80
MH□□□□□180-12	18.5	1775	265 460 [3]	51.1 29.4	460	29.4	9.70
MH□□□□□180-32	22.0	1775	265 460 [3]	59.7 34.4	460	34.4	9.00
MH□□□□□180-42	30.0	1770	265 460 [3]	80.7 46.5	460	46.5	8.10
MH□□□□□225-12	37.0	1787	265 460 [3]	92.5 53.4	460	53.4	8.70
MH□□□□□225-22	45.0	1784	265 460 [3]	111 64.2	460	64.2	8.80

	M_N	M_a	M_b	cos ϕ	$\eta_{50\,\%}$	$\eta_{75\,\%}$	$\eta_{100\,\%}$	J [1]	m [1]
	[Nm]	[Nm]	[Nm]		[%]	[%]	[%]	[kgcm²]	[kg]
MH□□□□□080-32	4.16	9.37	9.89	0.82	77.9	81.5	82.5	28.0	11.0
MH□□□□□090-12	6.04	17.0	20.0	0.71	79.3	83.0	84.0	32.0	16.0
MH□□□□□090-32	8.21	27.0	28.0	0.75	79.3	83.0	84.0	36.0	18.0
MH□□□□□100-12	12.0	40.0	47.0	0.78	82.6	86.5	87.5	61.0	24.0
MH□□□□□100-32	16.3	55.0	64.0	0.71	84.2	86.6	87.5	66.0	26.5
MH□□□□□112-22	21.7	69.0	84.0	0.79	84.2	86.6	87.5	135	38.0
MH□□□□□132-12	29.6	74.0	92.0	0.77	86.1	88.6	89.5	290	59.0
MH□□□□□132-22	40.6	92.0	147	0.79	86.1	88.6	89.5	336	66.0
MH□□□□□160-22	59.2	148	231	0.81	89.3	90.9	91.0	570	109
MH□□□□□160-32	80.7	210	274	0.81	89.3	90.9	91.0	760	124
MH□□□□□180-12	99.5	338	348	0.86	90.6	92.3	92.4	1390	175
MH□□□□□180-32	118	379	355	0.87	90.6	92.3	92.4	1440	180
MH□□□□□180-42	162	440	505	0.87	92.0	92.9	93.0	1850	200
MH□□□□□225-12	198	590	590	0.87	92.0	92.9	93.0	4610	395
MH□□□□□225-22	241	660	635	0.88	92.6	93.5	93.6	5300	415

[1] Without accessories

[2] Operation at 87 Hz is possible with 4-pole motors whose rated data at 60 Hz displays the voltage values Δ 265 V.
With motor frame sizes 132-12 to 225-22, the required voltage must also be specified in your order.

[3] Star/delta start-up possible at 460 V.



Rated data for 60 Hz

6-pole motors

- The motors are designed for an operation at 265/460 V but are also able to be operated at 230 V, 60 Hz. The same technical data apply, the starting torque is a bit lower.
- The motors have a service factor of 1.15 at 60 Hz. The service factor indicates the permissible overload during operation within the mains voltage fluctuations.

	P_N	n_N	$U_{N,\Delta}$	$I_{N,\Delta}$	$U_{N,Y}$	$I_{N,Y}$	I_a/I_N
			± 10 %		± 10 %		
	[kW]	[r/min]	[V]	[A]	[V]	[A]	
MD□□□□□071-13	0.18	1140	265	0.95	460	0.55	4.60
MD□□□□□071-33	0.25	1140	265	1.70	460	1.00	3.40
MD□□□□□080-13	0.37	1160	265	2.00	460	1.20	4.60
MD□□□□□080-33	0.55	1140	265	2.60	460	1.50	4.10

	M_N	M_a	M_b	cos ϕ	$\eta_{75\,\%}$	$\eta_{100\,\%}$	J [1]	m [1]
	[Nm]	[Nm]	[Nm]		[%]	[%]	[kgcm²]	[kg]
MD□□□□□071-13	1.47	4.59	4.59	0.62	68.4	70.5	12.5	6.50
MD□□□□□071-33	2.04	6.06	6.06	0.61	69.1	70.1	12.5	6.50
MD□□□□□080-13	3.03	9.28	9.83	0.59	69.5	70.5	26.0	11.0
MD□□□□□080-33	4.56	11.2	11.8	0.66	70.7	70.7	26.0	11.0

[1] Without accessories



Rated data for 87 Hz

4-pole motors

	P_N	n_N	M_N	M_{max}	$U_{N,\Delta}$	$I_{N,\Delta}$	cos ϕ	$\eta_{50\,\%}$	$\eta_{75\,\%}$	$\eta_{100\,\%}$	J [1]	m [1]
					± 10 %							
	[kW]	[r/min]	[Nm]	[Nm]	[V]	[A]		[%]	[%]	[%]	[kgcm²]	[kg]
MD□□□□□063-02	0.11	2535	0.40	1.60	400	0.42	0.55		62.0	67.0	3.30	3.90
MD□□□□□063-22	0.16	2485	0.63	2.50	400	0.48	0.67		66.0	70.0	3.30	3.90
MD□□□□□063-12	0.21	2535	0.80	3.20	400	0.85	0.52		61.0	66.0	3.30	4.10
MD□□□□□063-32	0.33	2475	1.26	5.00	400	1.00	0.65		68.0	71.0	3.30	4.10
MD□□□□□063-42	0.45	2480	1.74	7.00	400	1.40	0.63		66.0	73.0	3.70	4.40
MD□□□□□071-32	0.66	2520	2.51	10.0	400	1.60	0.72		76.0	78.0	10.7	5.80
MD□□□□□071-42	1.00	2515	3.74	15.0	400	2.40	0.74		79.0	80.0	12.8	6.40
MH□□□□□080-32	1.35	2520	5.12	20.0	400	3.10	0.84	77.3	81.6	83.5	28.0	11.0
MH□□□□□090-12	2.00	2540	7.52	30.0	400	4.60	0.78	80.4	84.9	86.5	32.0	16.0
MH□□□□□090-32	2.70	2545	10.1	40.0	400	5.80	0.76	82.3	85.5	86.0	36.0	18.0
MH□□□□□100-12	3.90	2555	14.6	60.0	400	8.60	0.83	85.7	89.6	90.0	61.0	24.0
MH□□□□□100-32	5.40	2555	20.2	80.0	400	12.1	0.76	84.7	87.9	88.5	66.0	26.5
MH□□□□□112-22	7.10	2565	26.4	106	400	14.5	0.83	87.4	90.2	90.9	135	38.0
MH□□□□□132-12	9.70	2580	35.9	144	400	20.6	0.82	88.2	91.4	91.8	290	59.0
MH□□□□□132-22	13.2	2570	49.1	196	400	27.0	0.82	88.2	90.1	90.7	336	66.0
MH□□□□□160-22	19.4	2580	71.8	287	400	37.7	0.81	90.6	91.0	91.6	570	109
MH□□□□□160-32	26.4	2580	97.7	391	400	50.3	0.81	91.4	91.0	91.6	760	124
MH□□□□□180-12	32.5	2585	120	480	400	58.8	0.86	92.0	92.2	92.8	1390	175
MH□□□□□180-32	38.7	2580	143	573	400	68.9	0.87	92.1	92.9	93.4	1440	180
MH□□□□□180-42	52.7	2575	196	782	400	92.6	0.87	92.6	92.7	93.2	1850	200
MH□□□□□225-12	64.0	2593	236	920	400	113	0.87	93.0	94.4	94.8	4610	395
MH□□□□□225-22	78.0	2590	288	1150	400	137	0.85	93.5	94.3	94.7	5300	415

[1] Without accessories

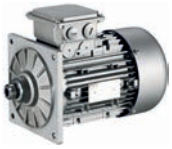

Dimensions, self-ventilated (2-pole)

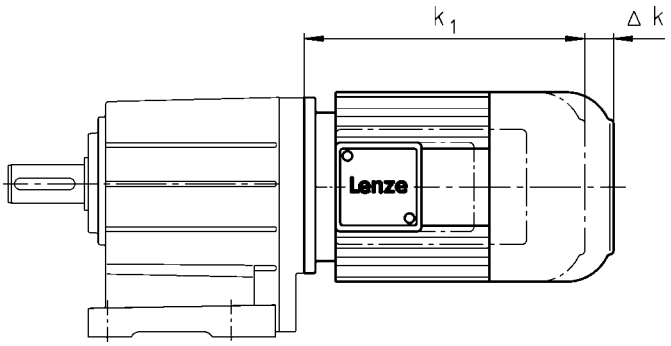

	Motor type			
	MDEMAXX	MDEMABR	MDEMABL	MDEMALL

Motor frame size				
	Δ k	Δ k	Δ k	Δ k
	[mm]	[mm]	[mm]	[mm]
063-11 063-31	0	40		
071-11 071-31		52	52	0



Dimensions, self-ventilated (4-pole)

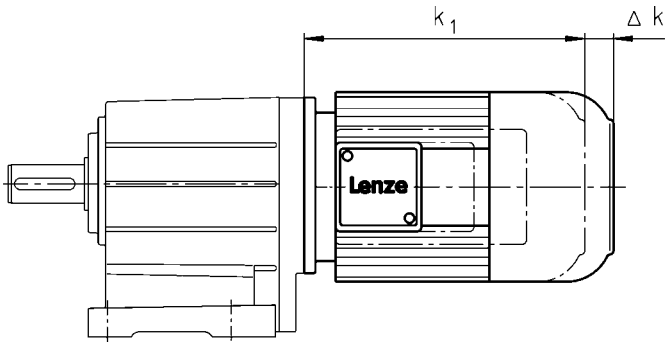

	Motor type					
	MDEMAXX	MDEMABR	MDEMABS MDEMABI MDEMABA	MDEMABL	MDEMARS MDEMAIG MDEMAAG	MDEMALL
Motor frame size						
	Δ k	Δ k	Δ k	Δ k	Δ k	Δ k
	[mm]	[mm]	[mm]	[mm]	[mm]	[mm]
063-02 063-22	0	71	135		71	
063-12 063-32 063-42		40	103		56	
071-32 071-42		52	96	52	52	0



Dimensions, self-ventilated (4-pole)

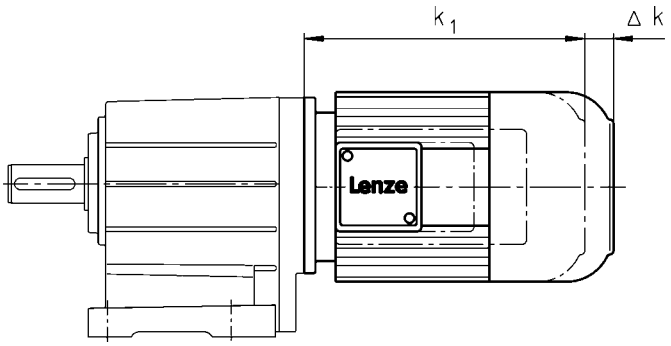

	Motor type			
	MHEMAXX	MHEMABR	MHEMABS MHEMABI MHEMABA	MHEMALL MHEMARS MHEMAIG MHEMAAG
Motor frame size				
	Δ k	Δ k	Δ k	Δ k
	[mm]	[mm]	[mm]	[mm]
080-32	0	73	111	111
090-12 090-32		68	105	87
100-12 100-32		76	101	81
112-22		90	120	80
132-12 132-22		110	125	103
160-22 160-32		105	191	83
180-12 180-32		113	192	79
180-42				
225-12 225-22			193	80



Dimensions, self-ventilated (6-pole)

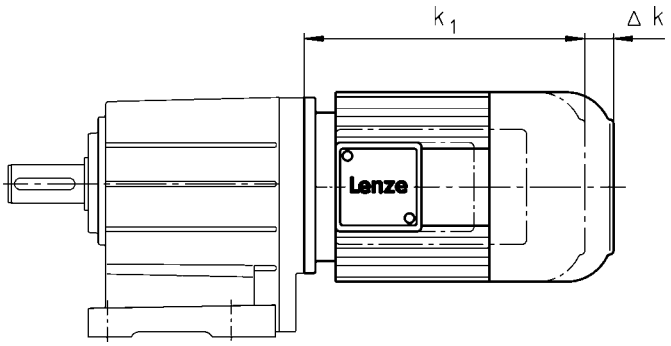

	Motor type					
	MDEMAXX	MDEMABR	MDEMABS MDEMABI MDEMABA	MDEMABL	MDEMARS MDEMAIG MDEMAAG	MDEMALL

Motor frame size						
	Δ k	Δ k	Δ k	Δ k	Δ k	Δ k
	[mm]	[mm]	[mm]	[mm]	[mm]	[mm]
071-13 071-33	0	52	96	52	52	0
080-13 080-33		73	111	73	111	4



Dimensions, forced ventilated (2-pole)

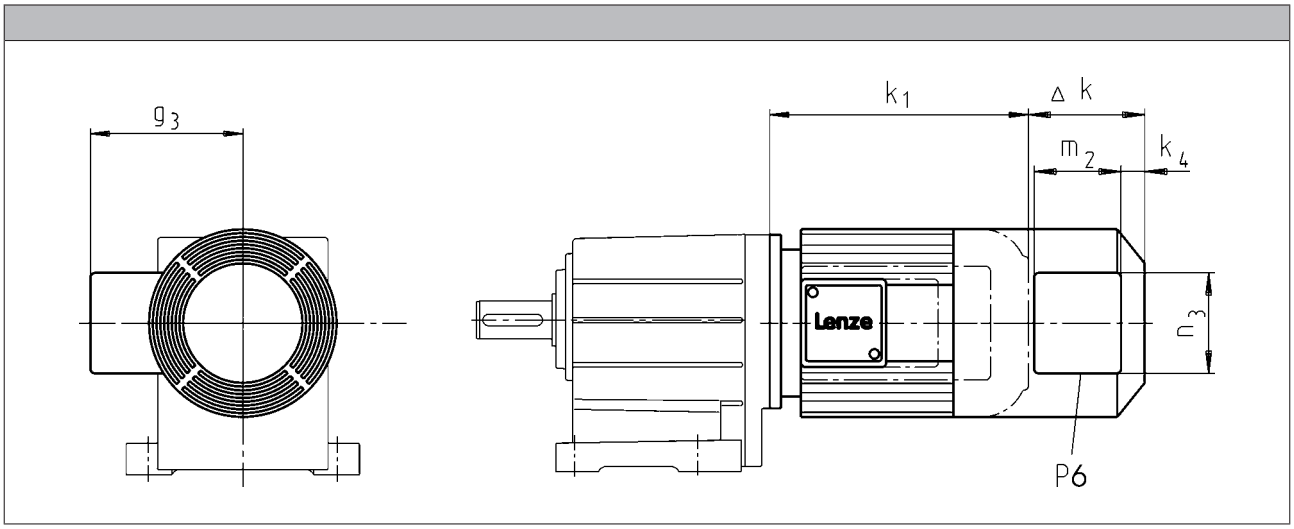

Motor type							
	MDFMAXX	MDFMABR					

Motor frame size							
	Δ k	Δ k	k_4	g_3	m_2	n_3	P_6
	[mm]	[mm]	[mm]	[mm]	[mm]	[mm]	[mm]
063-11 063-31	128	170	12	115	95	105	1x M16x1.5
071-11 071-31		165		122			

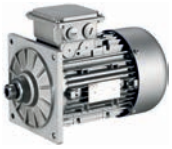

Dimensions, forced ventilated (4-pole)

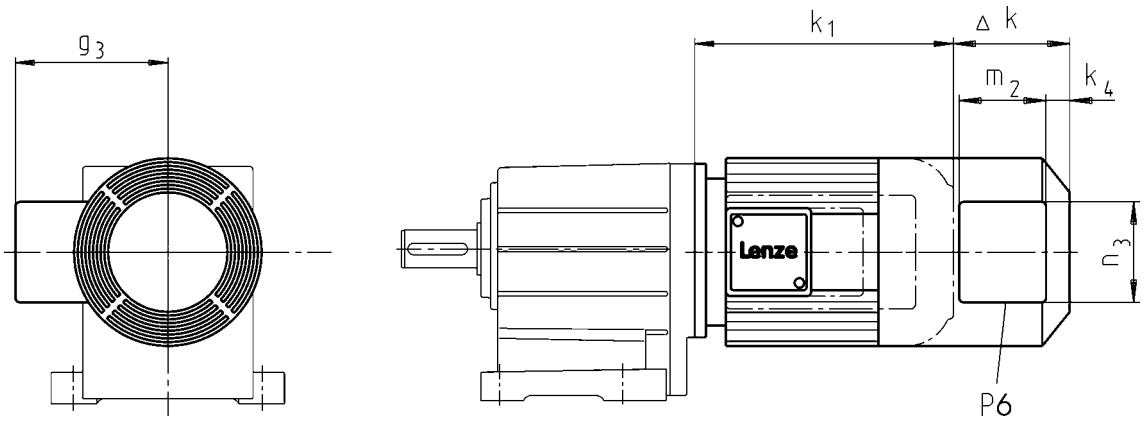

Motor type									
	MDFMAXX	MDFMABR	MDFMABS MDFMABI MDFMABA	MDFMARS MDFMAIG MDFMAAG					

Motor frame size									
	Δ k	Δ k	Δ k	Δ k	k_4	g_3	m_2	n_3	P_6
	[mm]	[mm]	[mm]	[mm]	[mm]	[mm]	[mm]	[mm]	[mm]
063-12 063-32 063-42	128	170	170	128	12	115	95	105	1x M16x1.5
071-32 071-42		165	165			122			



Dimensions, forced ventilated (4-pole)

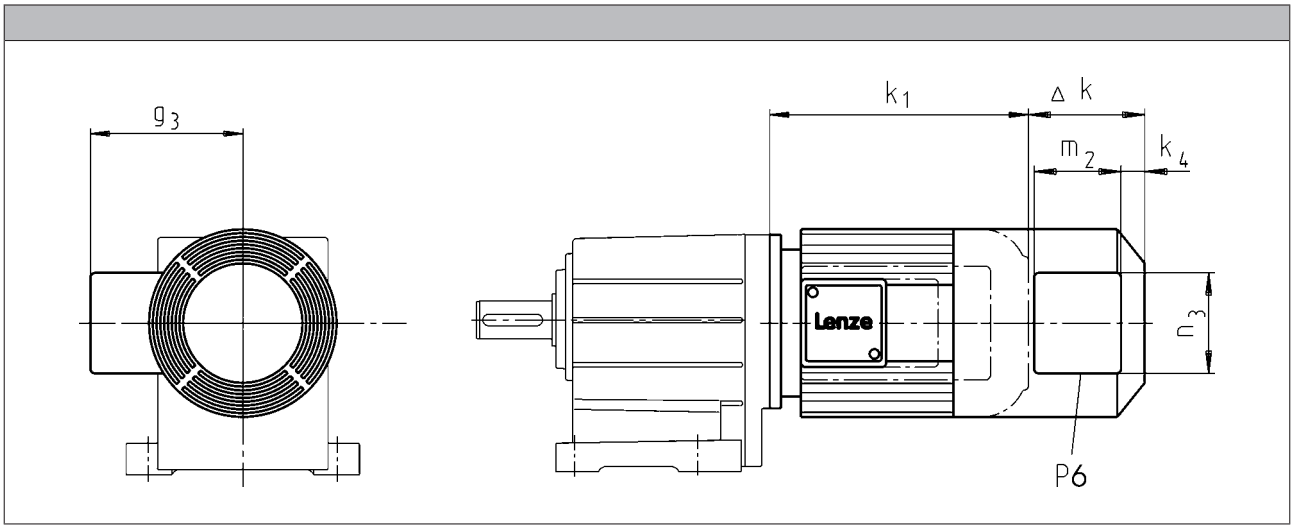

Motor type									
	MHFMAXX	MHFMABR	MHFMABS MHFMABI MHFMABA	MHFMARS MHFMAIG MHFMAAG					

Motor frame size									
	Δ k	Δ k	Δ k	Δ k	k_4	g_3	m_2	n_3	P_6
	[mm]	[mm]	[mm]	[mm]	[mm]	[mm]	[mm]	[mm]	[mm]
080-32	128	183	183	128	13	132	96	106	1x M16x1.5
090-12 090-32		181	181		22	141	95	105	
100-12 100-32	109	170	170	109		150			
112-22	102	183	183	183		162			
132-12 132-22	115	202	202	202	32	182			
160-22 160-32	149	179	237	224	31	209	96	106	
180-12 180-32		215	275	215					
180-42	155		260						
225-12 225-22	213	213	213	213					

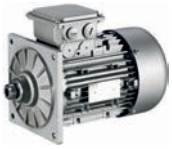

Dimensions, forced ventilated (6-pole)

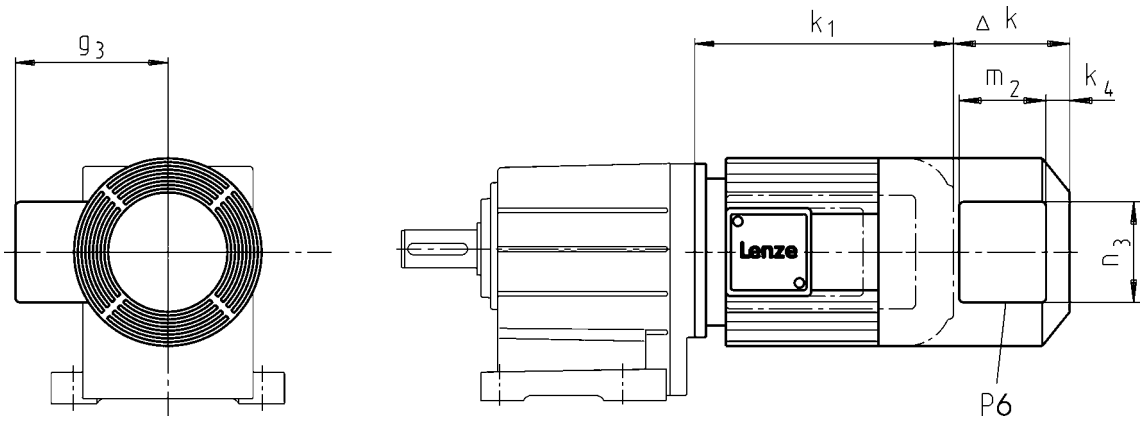

Motor type									
	MDFMAXX	MDFMABR	MDFMABS MDFMABI MDFMABA	MDFMARS MDFMAIG MDFMAAG					

Motor frame size									
	Δ k	Δ k	Δ k	Δ k	k_4	g_3	m_2	n_3	P_6
	[mm]	[mm]	[mm]	[mm]	[mm]	[mm]	[mm]	[mm]	[mm]
071-13 071-33	128	165	165	128	12	122	95	105	1x M16x1.5
080-13 080-33		183	183		13	132	96	106	



Dimensions, 8400 motec inverter

Rated frequency 50/60 Hz

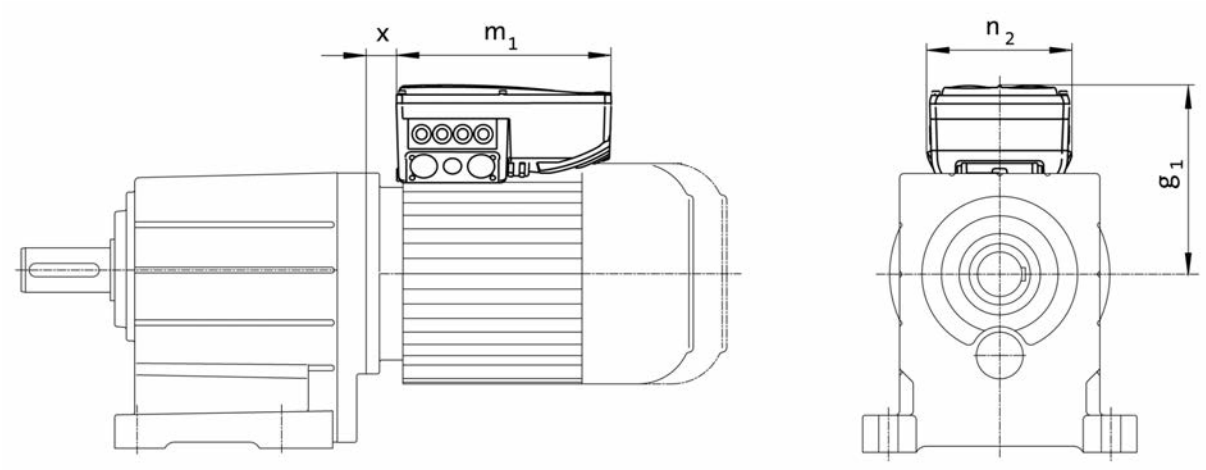

Product key					
Motor	Inverter				
		$g_{1,\ 50Hz}$	$m_{1,\ 50Hz}$	$n_{2,\ 50Hz}$	x_{50Hz}
		[mm]	[mm]	[mm]	[mm]
MD□□□□□071-32	E84DVB□3714S□□□2□	163	241	161	21.0
MD□□□□□071-42	E84DVB□5514S□□□2□				
MH□□□□□080-32	E84DVB□7514S□□□2□	172			25.5
MH□□□□□090-12	E84DVB□1124S□□□2□	177			28.8
MH□□□□□090-32	E84DVB□1524S□□□2□				
MH□□□□□100-12	E84DVB□2224S□□□2□	217	260	176	29.6
MH□□□□□100-32	E84DVB□3024S□□□2□				
MH□□□□□112-22	E84DVB□4024S□□□2□	282	325	195	19.0
MH□□□□□132-12	E84DVB□5524S□□□2□	301			34.5
MH□□□□□132-22	E84DVB□7524S□□□2□				

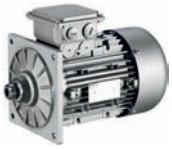

Dimensions, 8400 motec inverter

Rated frequency 87 Hz

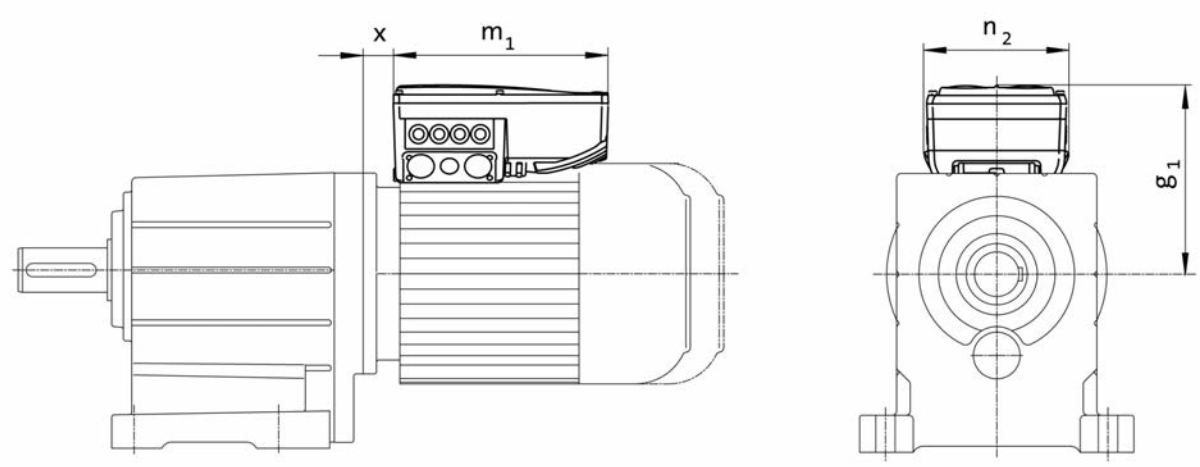

Product key					
Motor	Inverter				
		$g_{1,\ 87Hz}$	$m_{1,\ 87Hz}$	$n_{2,\ 87Hz}$	x_{87Hz}
		[mm]	[mm]	[mm]	[mm]
MD□□□□□063-32	E84DVB□3714S□□□2□	154	241	161	18.8
MD□□□□□063-42	E84DVB□5514S□□□2□				
MD□□□□□071-32	E84DVB□7514S□□□2□	163			21.0
MD□□□□□071-42	E84DVB□1124S□□□2□				
MH□□□□□080-32	E84DVB□1524S□□□2□	172			25.5
MH□□□□□090-12	E84DVB□2224S□□□2□	206	260	176	27.8
MH□□□□□090-32	E84DVB□3024S□□□2□				
MH□□□□□100-12	E84DVB□4024S□□□2□	272	325	195	17.1
MH□□□□□100-32	E84DVB□5524S□□□2□				
MH□□□□□112-22	E84DVB□7524S□□□2□	282			19.0



Spring-applied brake

Three-phase AC motors can be fitted with a spring-applied brake. This is activated after the supply voltage is switched off (closed-circuit principle). For optimum adjustment of the brake motor to the application, a range of braking torques and control modes is available for every motor frame size. For applications with very high operating frequencies the brake is also available in a LongLife version, with reinforced mechanical brake components.

Features

Versions
- **Standard**
  - 1 x 10^6 repeating switching cycles
  - 1 x 10^6 reversing switching cycles
- **LongLife**
  - 10 x 10^6 repeating switching cycles
  - 15 x 10^6 reversing switching cycles

Control
- DC supply
- AC supply via rectifier in the terminal box

Enclosure
- Without manual release IP55
- With manual release IP54

Friction lining
- Non-asbestos, low wearing

Options
- Manual release
- UL/CSA approval
- Noise-reduced

Assignment of 2-pole motors and brakes

Design	Standard		LongLife	
Motor frame size	Size	Rated torque	Size	Rated torque
	Brake		Brake	
		M_k		M_k
		[Nm]		[Nm]
063-11	06	2.50	06	2.50
063-31	06	4.00	06	4.00
071-11	06	2.50	06	4.00
071-31	06	4.00	08	3.50
	08	3.50		

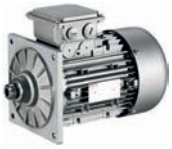

Spring-applied brake

Assignment of 4-pole motors and brakes

Design	Standard		LongLife	
Motor frame size	**Size**	**Rated torque**	**Size**	**Rated torque**
	Brake		Brake	
		M_k		M_k
		[Nm]		[Nm]
063-02 063-12 063-22 063-32 063-42	06 06	2.50 4.00	06	4.00
071-12 071-32	06 06 08	2.50 4.00 3.50	06 08	4.00 3.50
071-42	06 06 08 08	2.50 4.00 3.50 8.00	06 08 08	4.00 3.50 8.00
080-32	08 08 10	3.50 8.00 7.00	08 10	8.00 7.00
090-12 090-32	08 08 10 10 10	3.50 8.00 7.00 16.0 23.0	08 10 10	8.00 7.00 16.0
100-12	10 10 12 12	7.00 16.0 14.0 32.0	10 12 12	16.0 14.0 32.0
100-32	10 10 12 12 12	7.00 16.0 14.0 32.0 46.0		



Spring-applied brake

Assignment of 4-pole motors and brakes

Design	Standard		LongLife	
Motor frame size	**Size**	**Rated torque**	**Size**	**Rated torque**
	Brake		Brake	
		M_k		M_k
		[Nm]		[Nm]
112-22	12 12 14 14	14.0 32.0 35.0 60.0		
132-12	14 14 16 16	35.0 60.0 60.0 80.0		
132-22	14 14 16 16 16	35.0 60.0 60.0 80.0 100		
160-22	16 16 18 18	60.0 80.0 80.0 150		
160-32	18 18 18	80.0 150 200		
180-12	18 18 20 20	80.0 150 145 260		
180-32	18 18 20 20 20	80.0 150 145 260 315		
200-32	18 18 20 20 20 20	80.0 150 145 260 315 400		
225-12	25 25 25	265 400 490		
225-22	25 25 25 25	265 400 490 600		

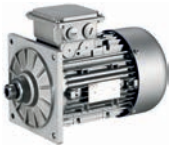

Spring-applied brake

Assignment of 6-pole motors and brakes

Design	Standard		LongLife	
Motor frame size	**Size**	**Rated torque**	**Size**	**Rated torque**
	Brake		Brake	
		M_k		M_k
		[Nm]		[Nm]
071-13 071-33	06 06 08	2.50 4.00 3.50	06 08	4.00 3.50
080-13 080-33	08 08 10	3.50 8.00 7.00	08 08 10	3.50 8.00 7.00



Spring-applied brake

Direct connection without rectifier

If the brake is activated directly without a rectifier, a freewheeling diode or a spark suppressor is required to protect against induction peaks.

- Supply voltages
  DC 24 V
  DC 180 V
  DC 205 V

Connection via mains voltage with brake rectifier

If the brake is not directly supplied with DC voltage, a rectifier is required. This is included in the scope of supply and is located in the terminal box of the motor. The rectifier converts the AC voltage of the connection into DC voltage. The following rectifiers are available:

Half-wave rectifier, 6-pole

- Ratio of supply voltage to brake coil voltage = 2.22
- Approved by UL/CSA
- Supply voltages
  AC 230 V
  AC 400 V
  AC 460 V



Bridge rectifier, 6-pole

- Ratio of supply voltage to brake coil voltage = 1.11
- Supply voltage
  AC 230 V



Bridge/half-wave rectifier, 6-pole

- Ratio of supply voltage to brake coil voltage
  up to overexcitation time = 1.11
  beyond overexcitation time = 2.22



Supply voltages:

- AC 230 V
- AC 400 V

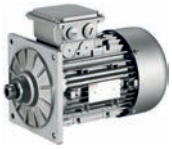

Spring-applied brake

Connection via mains voltage with brake rectifier

Bridge/half-wave rectifier, 6-pole
- Ratio of supply voltage to brake coil voltage
  up to overexcitation time = 1.11
  beyond overexcitation time = 2.22



Supply voltages:
- AC 230 V
- AC 400 V

During the switching operation the bridge/half-wave rectifier functions as a bridge rectifier for the overexcitation time $t_{ü}$ and then as a half-wave rectifier. This combination optimises the performance of the brake – depending on the assignment of brake coil voltage and supply voltage:

- **Short-time overexcitation of the brake coil**
  Activating the brake coil for the overexcitation time $t_{ü}$ with twice the rated voltage allows the disengagement time to be reduced. The brake opens more quickly and wear on the friction lining is reduced.
  These features make this activation version particularly suitable for lifting applications. It is therefore only available in combination with a brake with increased braking torque.
- **Holding current reduction (cold brake)**
  By reducing the holding current, the bridge/half-wave rectifier is able to reduce the power input to the open brake. As the brake heats up less, this type of activation is known as "cold brake".



Spring-applied brake

Permissible friction energy

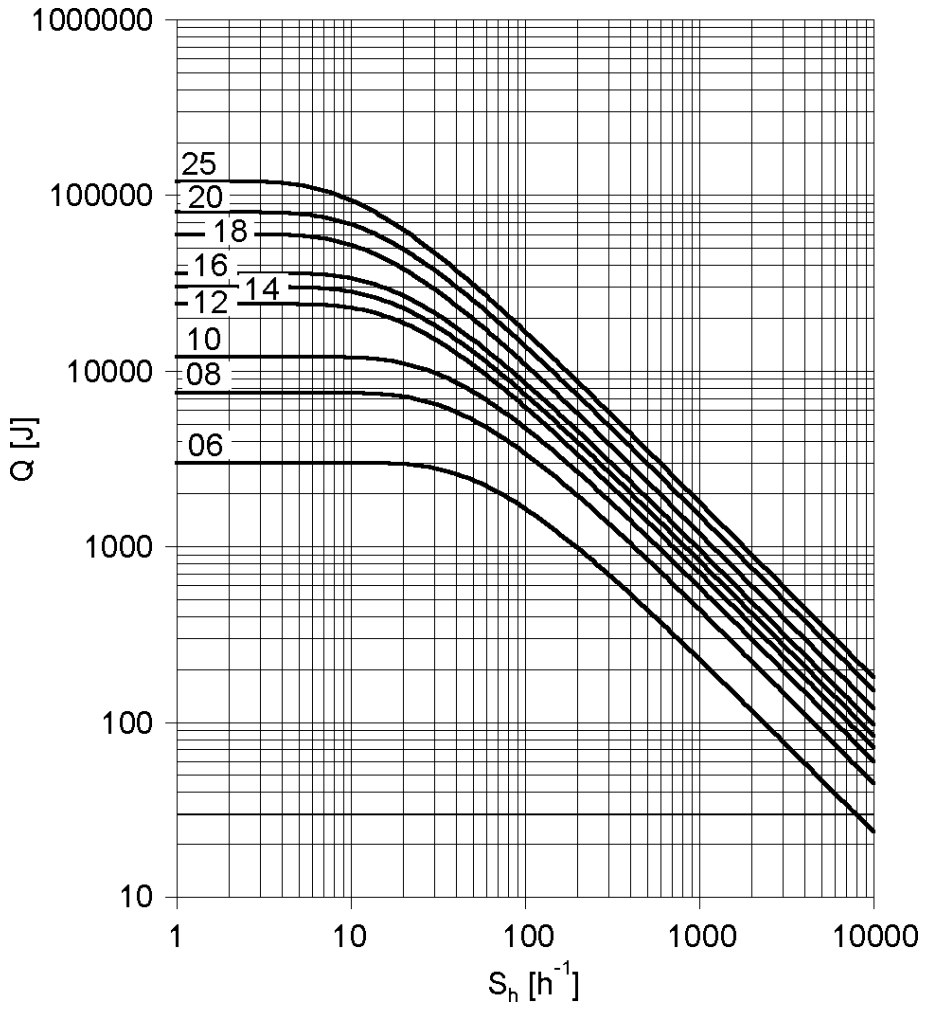

Q =Switching energy per switching cycle
S_h =Operating frequency
Brake size = 06 to 25

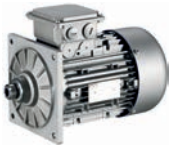

Spring-applied brake

Rated data with reduced braking torque

► Please enquire for braking torques and maximum switching work values not listed here.

Size			06	08	10	12	14	16	18	20	25
Power input											
	P_{in}	[kW]	0.020	0.025	0.030	0.040	0.050	0.055	0.085	0.10	0.11
Braking torque											
100	M_B	[Nm]	2.50	3.50	7.00	14.0	35.0	60.0	80.0	145	265
1000	M_B	[Nm]	2.30	3.10	6.10	12.0	30.0	50.0	65.0	115	203
1200	M_B	[Nm]	2.30	3.10	6.00	12.0	29.0	48.0	63.0	112	199
1500	M_B	[Nm]	2.20	3.00	5.80	11.0	28.0	47.0	61.0	109 [1)]	193 [1)]
1800	M_B	[Nm]	2.10	2.90	5.70	11.0	28.0	46.0	60.0 [1)]		
3000	M_B	[Nm]	2.00	2.80	5.30	10.0	26.0 [1)]	43.0 [1)]			
3600	M_B	[Nm]	2.00	2.70	5.20	10.0 [1)]					
Maximum switching energy											
100	Q_E	[KJ]	3.00	7.50	12.0	24.0	30.0	36.0	60.0	80.0	120
1000	Q_E	[KJ]	3.00	7.50	12.0	24.0	30.0	36.0	60.0	80.0	120
1200	Q_E	[KJ]	3.00	7.50	12.0	24.0	30.0	36.0	60.0	80.0	120
1500	Q_E	[KJ]	3.00	7.50	12.0	24.0	30.0	36.0	60.0	24.0 [1)]	36.0 [1)]
1800	Q_E	[KJ]	3.00	7.50	12.0	24.0	30.0	36.0	36.0 [1)]		
3000	Q_E	[KJ]	3.00	7.50	12.0	24.0	18.0 [1)]	11.0 [1)]			
3600	Q_E	[KJ]	3.00	7.50	12.0	7.00 [1)]					
Transition operating frequency											
	$S_{hü}$	[1/h]	79.0	50.0	40.0	30.0	28.0	27.0	20.0	19.0	15.0
Moment of inertia											
	J	[kgcm²]	0.015	0.061	0.20	0.45	0.63	1.50	2.90	7.30	20.0
Mass											
	m	[kg]	0.90	1.50	2.60	4.20	5.80	8.70	12.6	19.5	31.0

[1)] In the region of the load limit the value for friction energy Q_{BW} can be reduced to 40 %.

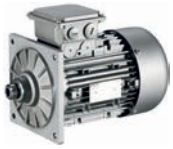

Spring-applied brake

Rated data with reduced braking torque

► Activation via half-wave or bridge rectifier

Size			06	08	10	12	14	16	18	20	25
Friction energy											
	Q_{BW}	[MJ]	113	210	264	706	761	966	1542	2322	3522
Delay time											
Engaging	t_{11}	[ms]	11.0	14.0	20.0	21.0	37.0	53.0	32.0	47.0	264
Rise time											
Braking torque	t_{12}	[ms]	13.0	10.0	17.0	19.0	22.0	30.0	20.0	100	120
Engagement time											
	t_1	[ms]	24.0		37.0	40.0	59.0	83.0	52.0	147	384
Disengagement time											
	t_2	[ms]	35.0	37.0	57.0	65.0	148	169	230	207	269

► Activation via bridge/half-wave rectifier

Design			Holding current reduction (cold brake)								
Size			06	08	10	12	14	16	18	20	25
Friction energy											
	Q_{BW}	[MJ]	113	210	264	706	761	966	1542	2322	3522
Overexcitation time											
	$t_ü$	[ms]	300				1300				
Min. rest time											
	t	[ms]	900				3900				
Delay time											
Engaging	t_{11}	[ms]	12.0	22.0	35.0	49.0	61.0	114	83.0	126	304
Rise time											
Braking torque	t_{12}	[ms]	14.0	16.0	30.0	45.0	37.0	65.0	52.0	269	138
Engagement time											
	t_1	[ms]	26.0	38.0	66.0	93.0	97.0	180	134	395	443
Disengagement time											
	t_2	[ms]	35.0	37.0	57.0	65.0	148	169	230	207	269

► The brake response and application times are guide values. The engagement time is 10 times longer with AC-side switching. With the maximum air gap the disengagement time t_2 – depending on the brake and control – is up to 4 times longer than the disengagement time with the rated air gap.

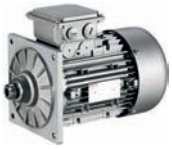

Spring-applied brake

Rated data with standard braking torque

► Please enquire for braking torques and maximum switching work values not listed here.

Size			06	08	10	12	14	16	18	20	25
Power input											
	P_{in}	[kW]	0.020	0.025	0.030	0.040	0.050	0.055	0.085	0.10	0.11
Braking torque											
100	M_B	[Nm]	4.00	8.00	16.0	32.0	60.0	80.0	150	260	400
1000	M_B	[Nm]	3.70	7.20	14.0	27.0	51.0	66.0	121	206	307
1200	M_B	[Nm]	3.60	7.00	14.0	27.0	50.0	65.0	118	201	300
1500	M_B	[Nm]	3.50	6.80	13.0	26.0	48.0	63.0	115	195 [1)]	291 [1)]
1800	M_B	[Nm]	3.40	6.70	13.0	26.0	47.0	61.0	112 [1)]		
3000	M_B	[Nm]	3.20	6.30	12.0	24.0	44.0 [1)]	57.0 [1)]			
3600	M_B	[Nm]	3.20	6.10	12.0	23.0 [1)]					
Maximum switching energy											
100	Q_E	[KJ]	3.00	7.50	12.0	24.0	30.0	36.0	60.0	80.0	120
1000	Q_E	[KJ]	3.00	7.50	12.0	24.0	30.0	36.0	60.0	80.0	120
1200	Q_E	[KJ]	3.00	7.50	12.0	24.0	30.0	36.0	60.0	80.0	120
1500	Q_E	[KJ]	3.00	7.50	12.0	24.0	30.0	36.0	60.0	24.0 [1)]	36.0 [1)]
1800	Q_E	[KJ]	3.00	7.50	12.0	24.0	30.0	36.0	36.0 [1)]		
3000	Q_E	[KJ]	3.00	7.50	12.0	24.0	18.0 [1)]	11.0 [1)]			
3600	Q_E	[KJ]	3.00	7.50	12.0	7.00 [1)]					
Transition operating frequency											
	$S_{hü}$	[1/h]	79.0	50.0	40.0	30.0	28.0	27.0	20.0	19.0	15.0
Moment of inertia											
	J	[kgcm²]	0.015	0.061	0.20	0.45	0.63	1.50	2.90	7.30	20.0
Mass											
	m	[kg]	0.90	1.50	2.60	4.20	5.80	8.70	12.6	19.5	31.0

[1)] In the region of the load limit the value for friction energy Q_{BW} can be reduced to 40 %.



Spring-applied brake

Rated data with standard braking torque

► Activation via half-wave or bridge rectifier

Size			06	08	10	12	14	16	18	20	25
Friction energy											
	Q_{BW}	[MJ]	85.0	158	264	530	571	966	1542	2322	3522
Delay time											
Engaging	t_{11}	[ms]	15.0		28.0		17.0	27.0	33.0	65.0	110
Rise time											
Braking torque	t_{12}	[ms]	13.0	16.0	19.0	25.0		30.0	45.0	100	120
Engagement time											
	t_1	[ms]	28.0	31.0	47.0	53.0	42.0	57.0	78.0	165	230
Disengagement time											
	t_2	[ms]	45.0	57.0	76.0	115	210	220	270	340	390

► Activation via bridge/half-wave rectifier

Design			Holding current reduction (cold brake)								
Size			06	08	10	12	14	16	18	20	25
Friction energy											
	Q_{BW}	[MJ]	85.0	158	264	530	571	966	1542	2322	3522
Overexcitation time											
	$t_{ü}$	[ms]	300				1300				
Min. rest time											
	t	[ms]	900				3900				
Delay time											
Engaging	t_{11}	[ms]	16.0	25.0	31.0	48.0	33.0	58.0	80.0	102	154
Rise time											
Braking torque	t_{12}	[ms]	14.0	27.0	21.0	43.0	49.0	64.0	109	157	168
Engagement time											
	t_1	[ms]	30.0	52.0		90.0	82.0	122	189	259	322
Disengagement time											
	t_2	[ms]	45.0	57.0	76.0	115	210	220	270	340	390

► The brake response and application times are guide values. The engagement time is 10 times longer with AC-side switching. With the maximum air gap the disengagement time t_2 – depending on the brake and control – is up to 4 times longer than the disengagement time with the rated air gap.

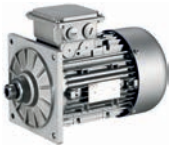

Spring-applied brake

Rated data with increased braking torque

► Please enquire for braking torques and maximum switching work values not listed here.

Size			10	12	14	16	16	18	20	20	25	25
Power input												
	P_{in}	[kW]	0.030	0.040	0.050	0.055	0.055	0.085	0.10	0.10	0.11	0.11
Braking torque												
100	M_B	[Nm]	23.0	46.0	75.0	100	125	200	315	400	490	600
1000	M_B	[Nm]	20.0	39.0	64.0	83.0	103	162	249	317	376	461
1200	M_B	[Nm]	20.0	39.0	62.0	81.0	101	158	244	309	367	449
1500	M_B	[Nm]	19.0	38.0	60.0	78.0	98.0	153	237 [1]	300 [1]	356 [1]	436 [1]
1800	M_B	[Nm]	19.0	37.0	59.0	77.0	96.0	150 [1]				
3000	M_B	[Nm]	17.0	34.0	55.0 [1]	71.0 [1]	89.0 [1]					
3600	M_B	[Nm]	17.0	33.0 [1]								
Maximum switching energy												
100	Q_E	[KJ]	12.0	24.0	30.0	36.0	36.0	60.0	80.0	80.0	120	120
1000	Q_E	[KJ]	12.0	24.0	30.0	36.0	36.0	60.0	80.0	80.0	120	120
1200	Q_E	[KJ]	12.0	24.0	30.0	36.0	36.0	60.0	80.0	80.0	120	120
1500	Q_E	[KJ]	12.0	24.0	30.0	36.0	36.0	60.0	24.0 [1]	24.0 [1]	36.0 [1]	36.0 [1]
1800	Q_E	[KJ]	12.0	24.0	30.0	36.0	36.0	36.0 [1]				
3000	Q_E	[KJ]	12.0	24.0	18.0 [1]	11.0 [1]	11.0 [1]					
3600	Q_E	[KJ]	12.0	7.00 [1]								
Transition operating frequency												
	$S_{hü}$	[1/h]	40.0	30.0	28.0	27.0	27.0	20.0	19.0	19.0	15.0	15.0
Moment of inertia												
	J	[kgcm²]	0.20	0.45	0.63	1.50	1.50	2.90	7.30	7.30	20.0	20.0
Mass												
	m	[kg]	2.60	4.20	5.80	8.70	8.70	12.6	19.5	19.5	31.0	31.0

[1] In the region of the load limit the value for friction energy Q_{BW} can be reduced to 40 %.

► Activation via half-wave or bridge rectifier

Size			10	12	14	16		18	20		25	
Friction energy												
	Q_{BW}	[MJ]	198	353	253	563	241	578	1596	580	2465	1409
Delay time												
Engaging	t_{11}	[ms]	10.0	16.0	11.0	22.0	17.0	24.0	46.0	17.0	77.0	38.0
Rise time												
Braking torque	t_{12}	[ms]	19.0	25.0		30.0		45.0	100		120	
Engagement time												
	t_1	[ms]	29.0	41.0	36.0	52.0	47.0	69.0	146	117	197	158
Disengagement time												
	t_2	[ms]	109	193	308	297	435	356	378	470	451	532



Spring-applied brake

Rated data with increased braking torque

► Activation via bridge/half-wave rectifier

Design			Holding current reduction (cold brake)									
Size			10	12	14	16		18	20		25	
Friction energy												
	Q_{BW}	[MJ]	198	353	253	563	241	578	1596	580	2465	1409
Overexcitation time												
	$t_ü$	[ms]	300			1300						
Min. rest time												
	t	[ms]	900			3900						
Delay time												
Engaging	t_{11}	[ms]	24.0	27.0	17.0	41.0	21.0	60.0	69.0	17.0	123	85.0
Rise time												
Braking torque	t_{12}	[ms]	44.0	43.0	37.0	55.0	37.0	113	148	100	190	270
Engagement time												
	t_1	[ms]	68.0	70.0	54.0	97.0	57.0	173	217	334	313	355
Disengagement time												
	t_2	[ms]	109	193	308	297	435	356	378	470	451	532

Design			Over-excitation									
Size			10	12	14	16		18	20		25	
Friction energy												
	Q_{BW}	[MJ]	264	706	761	966		1542	2322		3522	
Overexcitation time												
	$t_ü$	[ms]	300			1300						
Min. rest time												
	t	[ms]	900			3900						
Delay time												
Engaging	t_{11}	[ms]	29.0	54.0	31.0	70.0	46.0	86.0	103	55.0	171	135
Rise time												
Braking torque	t_{12}	[ms]	53.0	87.0	68.0	93.0	83.0	160	222	319	266	430
Engagement time												
	t_1	[ms]	82.0	141	99.0	163	129	246	325	374	437	565
Disengagement time												
	t_2	[ms]	53.0	81.0	117	141	168	151	160	167	184	204

► The brake response and application times are guide values. The engagement time is 10 times longer with AC-side switching. With the maximum air gap the disengagement time t_2 – depending on the brake and control – is up to 4 times longer than the disengagement time with the rated air gap.

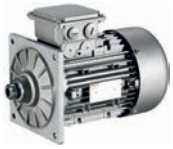

Spring-applied brake

Manual release lever

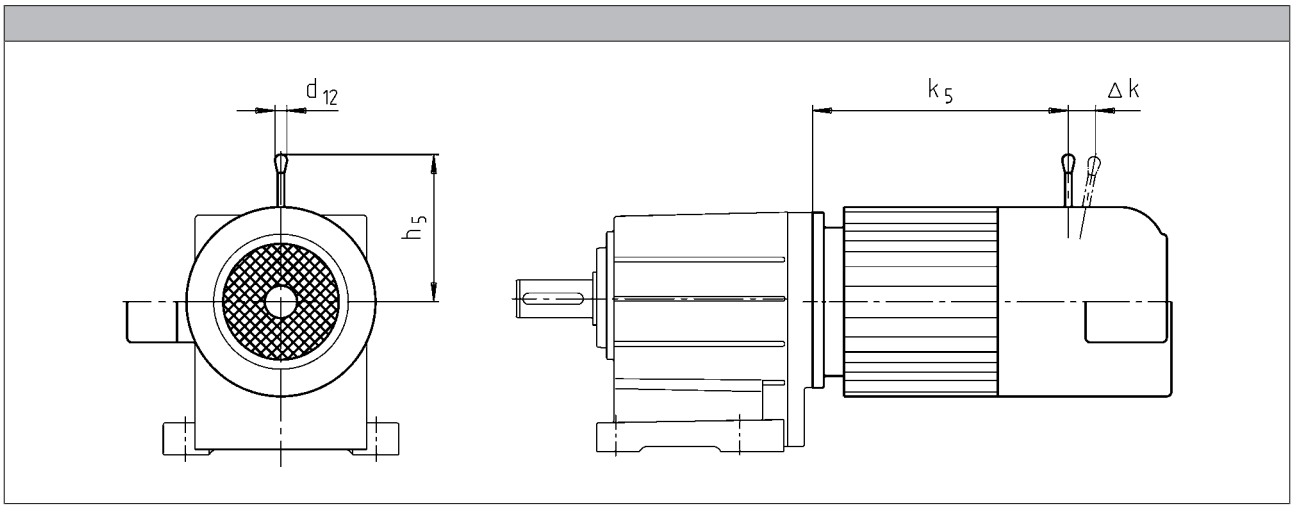

Motor frame size			Size				
			Brake				
				k_5	Δ k	h_5	d_{12}
				[mm]	[mm]	[mm]	[mm]
	063-02 063-22		06	185	29	107	13.0
063-11 063-31	063-12 063-32 063-42		06	173	29	107	13.0
071-11 071-31	071-32 071-42	071-13 071-33	06 08	186 187	29 27	107 116	13.0 13.0
	080-32	080-13 080-33	06 08	207 218	29 27	107 116	13.0 13.0
	090-12 090-32		08 10	245 256	27 28	116 132	13.0 13.0
	100-12		10 12	279 281	28 37	132 161	13.0 13.0
	100-32		10 12	294 296	28 37	132 161	13.0 13.0
	112-22		12 14	292 296	37 41	161 195	13.0 24.0
	132-12 132-22		14 16	373 373	41 55	195 240	24.0 24.0
	160-22		16 18	420 423	59 55	279 240	24.0 24.0
	160-32		16 18	464 467	55 59	240 279	24.0 24.0
	180-12 180-32		18 20	539 546	59 74	279 319	24.0 24.0
	180-42		18 20	596 603	59 74	279 319	24.0 24.0
	225-12 225-22		25 25	785 785	103 103	445 445	24.0 24.0

The following combinations with manual release lever and motor connection in the same position are not possible:
- HAN connector with connection in position 1
- Inverter motec
- Terminal box of motor sizes 071, 080, 090 for brake and retracting (M□□MA BR/BS/BA/BI)

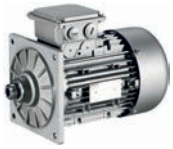

Resolver

Stator-fed resolver with two stator windings offset by 90° and one rotor winding with transformer winding.

► The three-phase AC motors with resolver cannot be used for speed-dependent safety functions in connection with the SM 301 safety module.

Product key				
				RS1
Accuracy				
			[']	-10 ... 10
Absolute positioning				
				1 revolution
Max. input voltage				
DC	$U_{in,max}$		[V]	10.0
Max. input frequency				
	$f_{in,max}$		[kHz]	4.00
Ratio				
Stator / rotor		± 5 %		0.30
Rotor impedance				
	Z_{ro}		[Ω]	51 + j90
Stator impedance				
	Z_{so}		[Ω]	102 + j150
Impedance				
	Z_{rs}		[Ω]	44 + j76
Min. insulation resistance				
At DC 500 V	R		[MΩ]	10.0
Number of pole pairs				
				1

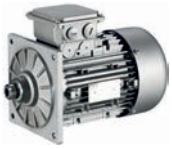

Incremental encoder and SinCos absolute value encoder

► The three-phase AC motors with incremental encoders or SinCos absolute value encoders cannot be used for speed-dependent safety functions in connection with the SM 301 safety module.

Encoder type			HTL incremental				TTL incremental			SinCos absolute value
Product key			IG128-24V-H	IG512-24V-H	IG1024-24V-H	IG2048-24V-H	IG512-5V-T	IG1024-5V-T	IG2048-5V-T	AM1024-8V-H
Encoder type										Multi-turn
Pulses			128	512	1024	2048	512	1024	2048	1024
Output signals			HTL				TTL			1 Vss
Interfaces			A, B track	A, B, N track and inverted						Hiperface
Absolute revolutions			0							4096
Accuracy		[']	-22.5 ... 22.5	-2 ... 2						-0.8 ... 0.8
Min. input voltage										
DC	$U_{in,min}$	[V]	8.00				4.75			7.00
Max. input voltage										
DC	$U_{in,max}$	[V]	26.0	30.0			5.25			12.0
Max. current consumption										
	I_{max}	[A]	0.040	0.15						0.080
Limit frequency										
	f_{max}	[kHz]	30.0	160			300			200
Inverter assignment			E84AVSC E84AVHC	E84AVHC			E84AVTC E94A ECS EVS93			

Inverters
- Inverter Drives 8400 StateLine (E84AVSC)
- Inverter Drives 8400 HighLine (E84AVHC)
- Inverter Drives 8400 TopLine (E84AVTC)

Servo-Inverters
- Servo Drives 9400 (E94A)
- 9300 servo inverters (EVS93)
- Servo Drives ECS



Blowers

► The use of a blower enables operation below 20 Hz without torque derating.

Rated data for 50 Hz

Size	Number of phases	Connection method					
Motor							
			U_{min}	U_{max}	P_{max}	I_{max}	m
			[V]	[V]	[kW]	[A]	[kg]
063	1		230	277	0.027	0.11	2.00
	3	Δ	200	303	0.028	0.12	
		Y	346	525		0.070	
071	1		230	277	0.027	0.10	2.10
	3	Δ	200	303	0.031	0.11	
		Y	346	525		0.060	
080	1		230	277	0.029	0.11	2.30
	3	Δ	200	303	0.031		
		Y	346	525		0.060	
090	1		220	277	0.065	0.29	2.70
	3	Δ	200	303	0.091	0.38	
		Y	346	525		0.22	
100	1		220	277	0.066	0.28	3.00
	3	Δ	200	303	0.091	0.37	
		Y	346	525		0.22	
112	1		220	277	0.071	0.28	3.10
	3	Δ	200	303	0.097	0.35	
		Y	346	525		0.20	
132	1		230	277	0.098	0.40	4.20
	3	Δ	200	303	0.12	0.58	
		Y	346	525		0.33	
160	1		230	277	0.25	0.97	6.20
	3	Δ	200	303		0.87	
		Y	346	525		0.50	
180	1		230	277		0.97	8.00
	3	Δ	200	303		0.87	
		Y	346	525		0.50	

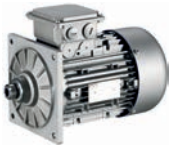

Blowers

Rated data for 50 Hz

Size	Number of phases	Connection method					
Motor							
			U_{min}	U_{max}	P_{max}	I_{max}	m
			[V]	[V]	[kW]	[A]	[kg]
200	1		230	277	0.25	0.97	8.00
	3	Δ	200	303		0.87	
		Y	346	525		0.50	
225		Δ	200	400	0.28	1.10	15.0
		Y	346	525	0.17	0.35	

Rated data for 60 Hz

Size	Number of phases	Connection method					
Motor							
			U_{min}	U_{max}	P_{max}	I_{max}	m
			[V]	[V]	[kW]	[A]	[kg]
063	1		230	277	0.032	0.12	2.00
	3	Δ	220	332	0.028	0.10	
		Y	380	575		0.060	
071	1		230	277	0.033	0.12	2.10
	3	Δ	220	332	0.029	0.10	
		Y	380	575		0.060	
080	1		230	277	0.037	0.14	2.30
	3	Δ	220	332	0.034	0.10	
		Y	380	575		0.060	
090	1		220	277	0.065	0.25	2.70
	3	Δ		332	0.077	0.33	
		Y	380	575		0.19	
100	1		220	277	0.075	0.30	3.00
	3	Δ		332	0.087	0.31	
		Y	380	575		0.18	
112	1		220	277	0.094	0.37	3.10
	3	Δ		332	0.10	0.31	
		Y	380	575		0.18	
132	1		230	277	0.15	0.57	4.20
	3	Δ	220	332		0.44	
		Y	380	575		0.25	
160		Δ	220	332	0.36	0.93	6.20
		Y	380	575		0.56	
180		Δ	220	332		0.93	8.00
		Y	380	575		0.56	
200		Δ	220	332		0.93	
		Y	380	575		0.56	
225		Δ	220	400	0.28	0.76	15.0
		Y	380	575	0.26	0.43	



Temperature monitoring

► The thermal sensors are integrated in the windings. The use of an additional motor protection switch is recommended.

TKO thermal contacts

Function	Operating temperature	Min. reset temperature	Max. reset temperature	Max. input current	Max. input voltage
					AC
	T	T_{min}	T_{max}	$I_{in,max}$	$U_{in,max}$
	-5 ... 5				
	[°C]	[°C]	[°C]	[A]	[V]
NC contact	150	90.0	135	2.50	250

PTC thermistor

Function	Operating temperature	Rated resistance			Standard
		155 °C	-20 °C	140 °C	
	T	R_N	R_N	R_N	
	-5 ... 5				
	[°C]	[Ω]	[Ω]	[Ω]	
Sudden change in resistance	150	550	30.0	250	DIN 44080 DIN VDE 0660 Part 303

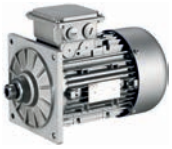

Temperature monitoring

KTY temperature sensor

	Function	Rated resistance			Max. input current	
		25 °C	150 °C	170 °C	25 °C	170 °C
		R_N	R_N	R_N	$I_{in,max}$	$I_{in,max}$
		[Ω]	[Ω]	[Ω]	[A]	[A]
KTY83-110	Continuous resistance change	1000	2225	2471	0.010	0.002
KTY84-130	Continuous resistance change	603	1334	1482	0.010	0.002

Variation of resistance

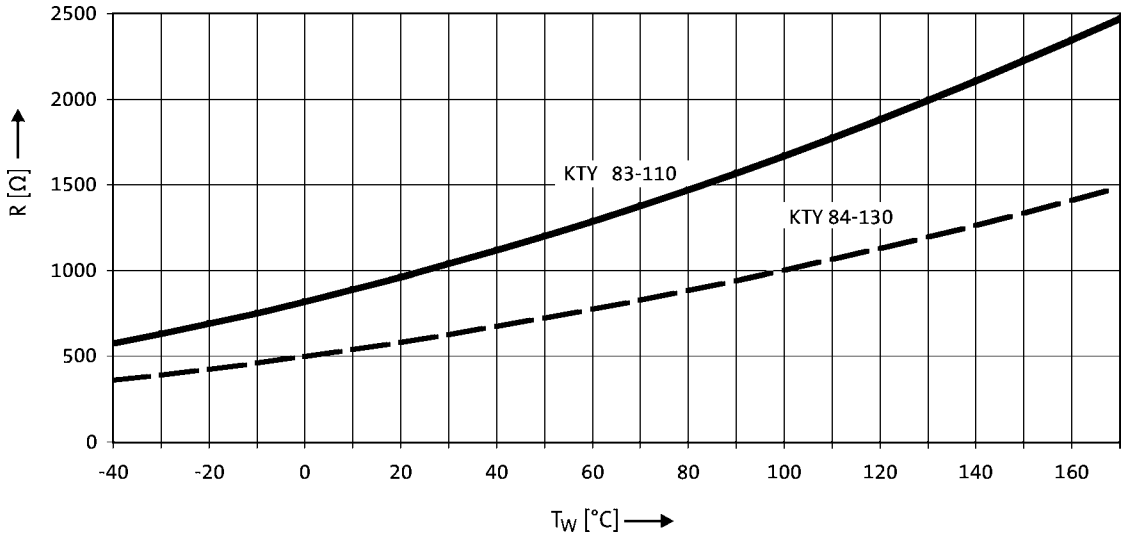

► If the detector is supplied with a measured current of 1 mA, the above relationship between the temperature and the resistance applies.



Terminal box

The three-phase AC motors are designed for operation at a constant mains frequency and with an inverter.
For 50 Hz operation, the motors are operated in Δconfiguration at 230 V or in star configuration at 400 V.
For inverter operation, the base frequency has been specified as 87 Hz at a rated voltage of 400 V in Δconfiguration.

In the standard version, the motors are connected in the terminal box. As an option, the motors are also available with the connectors described on the following pages as long as the permissible ratings are not exceeded.

Motor terminal box - built-on accessories assignment: 4-pole / 6-pole motors

Motor type	M□□MAXX	M□□MARS M□□MAIG M□□MAAG	M□□MAZE M□□MAHA	M□□MALL	M□□MALZ M□□MALH
Motor frame size					
	Terminal box				
063-02 063-22	KK1	KK2			
063-12 063-32 063-42	KK1	KK2			
071-32 071-42 071-13 071-33	KK1	KK2	KK2	KK1	KK1
080-13 080-32 080-33 080-42	KK1	KK2	KK2	KK1	KK1
090-12 090-32	KK1	KK2	KK2	KK1	KK1
100-12 100-32	KK1	KK2	KK2	KK2	KK2
112-22 112-32	KK1	KK2	KK2	KK1	KK1
132-12 132-22 132-32	KK1	KK3	KK3	KK1	KK1
160-22 160-32	KK3	KK3			
180-12 180-32 180-42 180-42	KK3	KK3			
225-12 225-22	KK3	KK3			

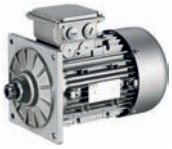

Terminal box

Motor terminal box - built-on accessories assignment: 4-pole / 6-pole motors

Motor type	M□□MABR	M□□MABS M□□MABI M□□MABA	M□□MABZ M□□MABH	M□□MABL
Motor frame size				
	Terminal box			
063-02 063-22	KK2	KK3		
063-12 063-32 063-42	KK2	KK3		
071-32 071-42 071-13 071-33	KK2	KK3	KK2	KK2
080-13 080-32 080-33 080-42	KK2	KK3	KK2	KK2
090-12 090-32	KK2	KK3	KK2	KK2
100-12 100-32	KK2	KK3	KK2	KK2
112-22 112-32	KK2	KK3	KK2	KK2
132-12 132-22 132-32	KK3	KK3	KK3	KK3
160-22 160-32	KK3	KK3		
180-12 180-32 180-42	KK3	KK3		
225-12 225-22	KK3	KK3		



Terminal box

Motor terminal box - built-on accessories assignment: 2-pole motors

Motor type	M□□MAXX	M□□MAZE	M□□MALL	M□□MALZ
Motor frame size				
	Terminal box			
063-11 063-31	KK1			
071-11 071-31	KK1	KK2	KK1	KK2
080-11 080-31	KK1	KK2	KK1	KK2
090-31 090-11	KK1	KK2	KK1	KK2
100-31 100-41	KK1	KK2	KK1	KK2
112-31 112-41	KK1	KK2	KK1	KK2
132-21	KK1	KK3	KK1	KK3

Motor type	MD□MABR	MD□MABZ	MD□MABL
Motor frame size			
	Terminal box		
063-11 063-31	KK2		
071-11 071-31	KK2	KK2	
080-11 080-31	KK2	KK2	KK2
090-31 090-11	KK2	KK2	KK2
100-31 100-41	KK2	KK2	KK2
112-31 112-41	KK2	KK2	KK2
132-21	KK3	KK3	KK3

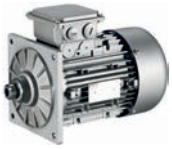

Terminal box

Dimensions of KK1

- ► For motors with motor terminal box KK1, the connector position can be selected in accordance with the terminal box position.
- ► If preferred positions are not specified in the order, the cable entry will be positioned as circled on the diagram below.

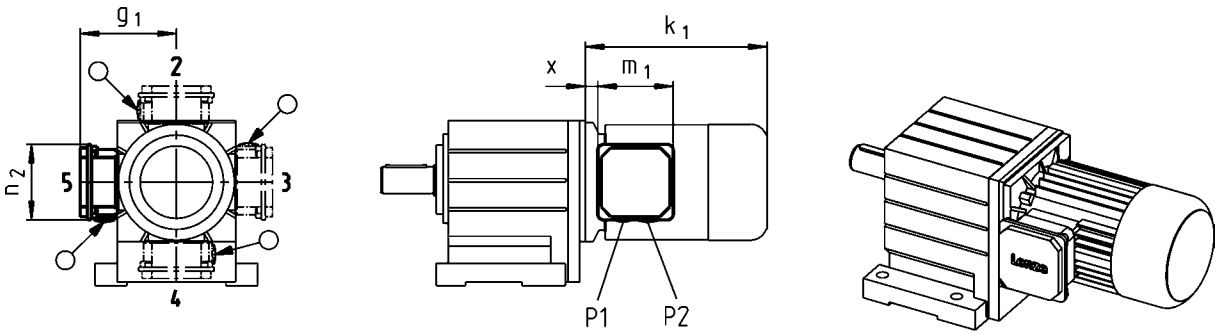

Size						
Motor						
	x	g_1	m_1	n_2	P_1	P_2
	[mm]	[mm]	[mm]	[mm]	[mm]	[mm]
063	21 12 [1)]	100 117 [1)]	75.0 93.0 [1)]	75.0 93.0 [1)]	M16x1.5 M20x1.5 [1)]	M20x1.5 M20x1.5
071	24 15 [1)]	109 126 [1)]				
080	14	150	115	115	M20x1.5	M25x1.5
090	19	157				
100	20	166				
112	22	176				
132	33	195	122	122	M32x1.5	M32x1.5

[1)] UL/CSA approval: cURus

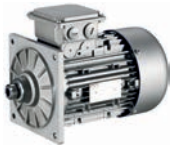

Terminal box

Cable entry position when using KK1

Terminal box in position 2

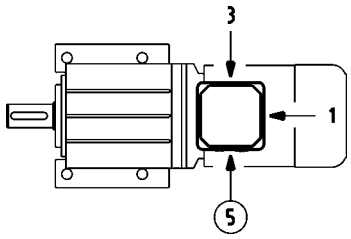

Terminal box in position 3

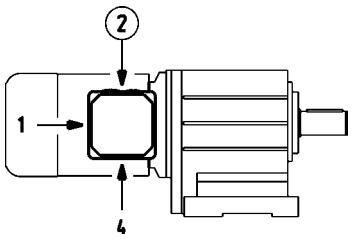

Terminal box in position 4

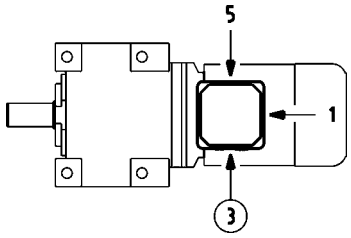

Terminal box in position 5

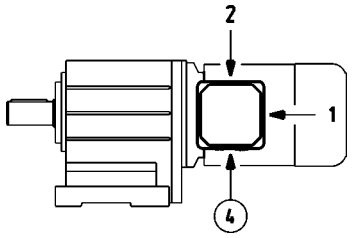

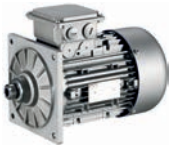

Terminal box

Dimensions of KK2

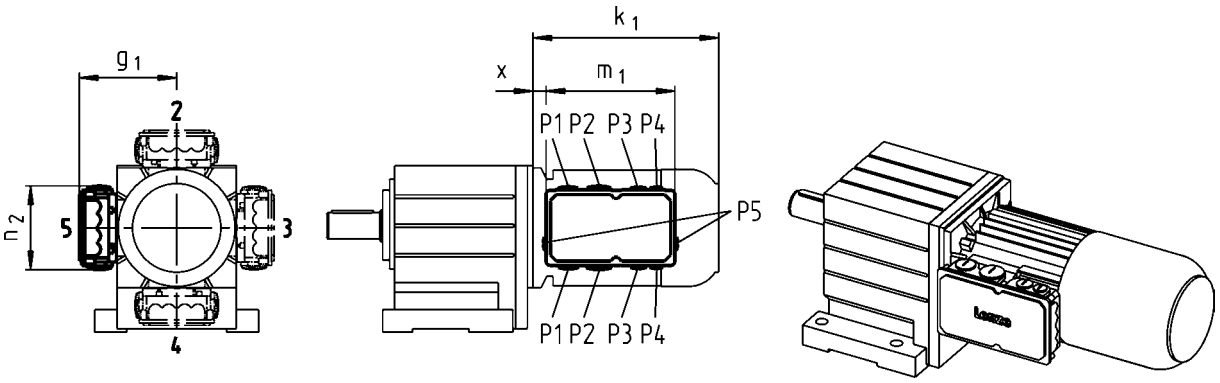

Size						
Motor						
	x	g_1	m_1	n_2	P_1	P_2
	[mm]	[mm]	[mm]	[mm]	[mm]	[mm]
063	13	107	136	103	M16x1.5	M20x1.5
071	15	118				
080	17	132	152	121	M20x1.5	M25x1.5
090	22	137				
100	23	147				
112	25	158				



Terminal box

Dimensions of KK3

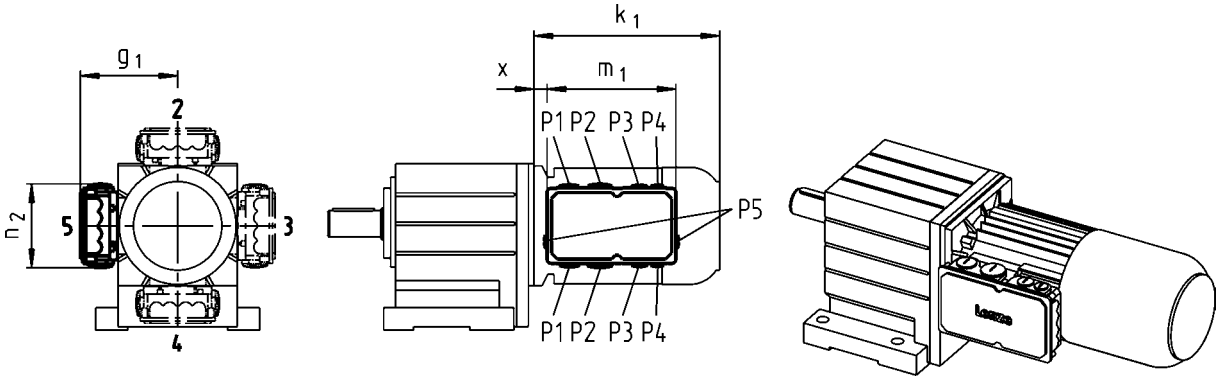

Size									
Motor									
	x	g_1	m_1	n_2	P_1	P_2	P_3	P_4	P_5
	[mm]	[mm]	[mm]	[mm]	[mm]	[mm]	[mm]	[mm]	[mm]
063	2	124	195	125	M25x1.5	M32x1.5	M20x1.5	M20x1.5	
071	5	133							
080	15	142							
090	20	147							
100	21	158							
112	23	168							
132	38	187							
160	35	210	226	127	M50x1.5	M16x1.5		M16x1.5	
180	73	230							
225	95	346	354	205		M63x1.5 [1)]	M50x1.5 [1)]		M16x1.5

[1)] Cable entry only possible at one position.
Terminal box position 2: cable entry at position 5.
Terminal box position 3: cable entry at position 2.
Terminal box position 4: cable entry at position 3.
Terminal box position 5: cable entry at position 4.

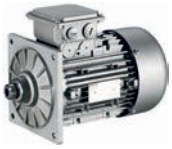

Plug connectors

ICN, HAN and M12 connectors (only for IG128-24V-H incremental encoder) are available for the three-phase AC motors.

ICN connector

A connector is used for power, brake and temperature monitoring. The connections to the feedback system and the blower each employ a separate connector.

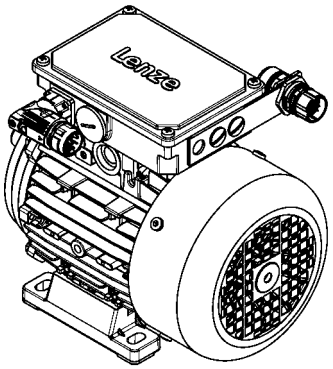

Connection for power, brake and temperature monitoring

The connectors can be rotated through 270° and are fitted with a bayonet catch for SpeedTec connectors. As this connector is also compatible with conventional union nuts, existing mating connectors can continue to be used without difficulty. The motor connection is determined in the terminal box and must be checked before commissioning.

► ICN 6-pole

Pin assignment			
Contact	Designation	Meaning	
1	BD1 / BA1	Brake +/AC	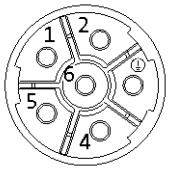
2	BD2 / BA2	Brake /AC	
PE	PE	PE conductor	
4	U	Phase U power	
5	V	Phase V power	
6	W	Phase W power	

► ICN 8-pole

Pin assignment			
Contact	Designation	Meaning	
1	U	Phase U power	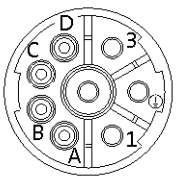
PE	PE	PE conductor	
3	V	Phase V power	
4	W	Phase W power	
A	TB1 / TP1 / R1	Thermal sensor: TKO/PTC/ +KTY	
B	TB2 / TP2 / R2	Thermal sensor: TKO/PTC/-KTY	
C	BD1 / BA1	Brake +/AC	
D	BD2 / BA2	Brake /AC	

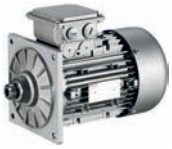

ICN connector

Feedback connection

All encoder systems (apart from IG128-24V-H) are also available with an ICN connector fixed to the motor terminal box for exceptionally fast commissioning. The connectors are fitted with a bayonet fixing, which is also compatible with conventional union nuts. Existing mating connectors can therefore continue to be used without difficulty.

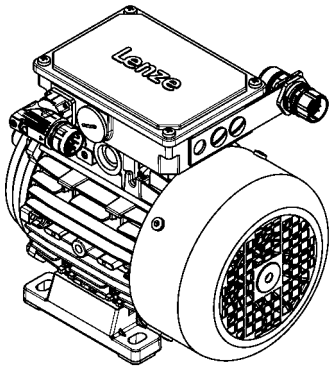

► Resolver

Pin assignment			
Contact	Designation	Meaning	
1	+Ref	Transformer windings	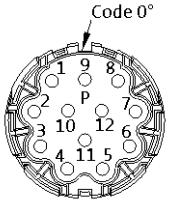
2	-Ref		
3	+VCC ETS	Supply: Electronic nameplate	
4	+COS	Cosine stator windings	
5	-COS		
6	+SIN	Sine stator windings	
7	-SIN		
8		Not assigned	
9			
10			
11	+KTY	KTY temperature sensor	
12	-KTY		

► Hiperface incremental encoder and SinCos absolute value encoder

Pin assignment			
Contact	Designation	Meaning	
1	B	Track B/+SIN	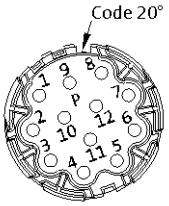
2	A^-	Track A inverse/-COS	
3	A	Track A/+COS	
4	$+U_B$	Supply +	
5	GND	Mass	
6	Z^-	Zero track inverse/-RS485	
7	Z	Zero track/+RS485	
8		Not assigned	
9	B^-	Track B inverse/-SIN	
10		Not assigned	
11	+KTY	KTY temperature sensor	
12	-KTY		

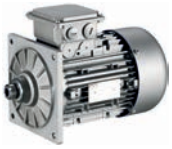

ICN connector

Motor terminal box with ICN connectors - built-on accessories assignment: 2-pole motors

Motor type	M□□MAXX	M□□MAZE	M□□MALL	M□□MALZ
Motor frame size				
	Terminal box with ICN connector			
063-11 063-31	KK1			
071-11 071-31	KK1	KK2	KK1	KK2
080-11 080-31	KK1	KK2	KK1	KK2
090-31 090-11	KK1	KK2	KK1	KK2
100-31 100-41	KK1	KK2	KK1	KK2
112-31 112-41	KK1	KK2	KK1	KK2
132-21	KK1	KK3	KK1	KK3

Motor type	M□□MABR	M□□MABZ	M□□MABL
Motor frame size			
	Terminal box with ICN connector		
063-11 063-31	KK2		
071-11 071-31	KK2	KK2	
080-11 080-31	KK2	KK2	KK2
090-31 090-11	KK2	KK2	KK2
100-31 100-41	KK2	KK2	KK2
112-31 112-41	KK2	KK2	KK2
132-21	KK3	KK3	KK3



ICN connector

Motor terminal box with ICN connectors - built-on accessories assignment: 4-pole / 6-pole motors

Motor type	M□□MAXX	M□□MARS M□□MAIG M□□MAAG	M□□MAZE M□□MAHA	M□□MALL	M□□MALZ M□□MALH
Motor frame size	Terminal box with ICN connector				
063-02 063-22	KK1	KK2			
063-12 063-32 063-42	KK1	KK2			
071-32 071-42 071-13 071-33	KK1	KK2	KK2	KK1	KK1
080-13 080-32 080-33 080-42	KK1	KK2	KK2	KK1	KK1
090-12 090-32	KK1	KK2	KK2	KK1	KK1
100-12 100-32	KK1	KK2	KK2	KK2	KK2
112-22 112-32	KK1	KK2	KK2	KK1	KK1
132-12 132-22 132-32	KK1	KK3	KK3	KK1	KK1

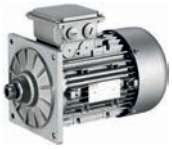

ICN connector

Motor terminal box with ICN connectors - built-on accessories assignment: 4-pole / 6-pole motors

Motor type	M□□MABR	M□□MABS M□□MABI M□□MABA	M□□MABZ M□□MABH	M□□MABL
Motor frame size	Terminal box with ICN connector			
063-02 063-22	KK2	KK2		
063-12 063-32 063-42	KK2	KK2		
071-32 071-42 071-13 071-33	KK2	KK2	KK2	KK2
080-13 080-32 080-33 080-42	KK2	KK2	KK2	KK2
090-12 090-32	KK2	KK2	KK2	KK2
100-12 100-32	KK2	KK2	KK2	KK2
112-22 112-32	KK2	KK2	KK2	KK2
132-12 132-22 132-32	KK3	KK3	KK3	KK3



ICN connector

Dimensions of KK1

- ► For motors with connectors, the connector position can be selected in accordance with the terminal box position.
- ► If preferred positions are not specified in the order, the connector will be positioned as circled on the diagram below.

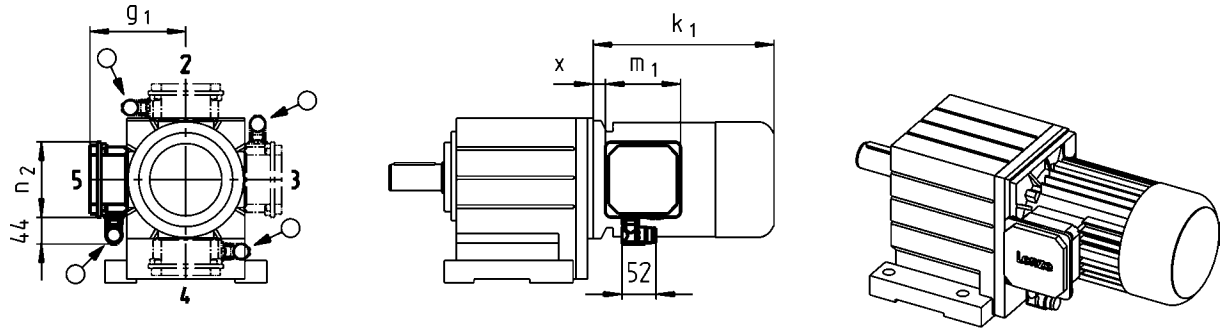

Size				
Motor				
	x	g_1	m_1	n_2
	[mm]	[mm]	[mm]	[mm]
063	12	117	93.0	93.0
071	15	126		
080	14	150	115	115
090	19	157		
100	20	166		
112	22	176		
132	33	195	122	122

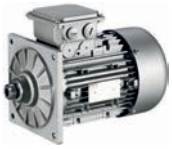

ICN connector

Connector position when using KK1

Terminal box in position 2

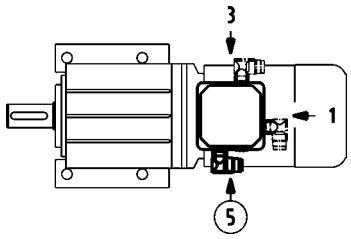

Terminal box in position 3

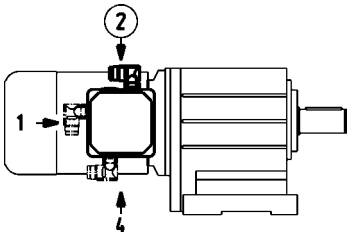

Terminal box in position 4

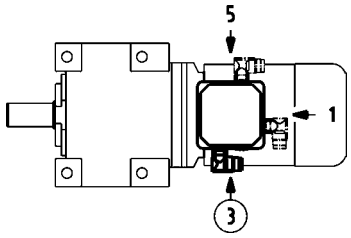

Terminal box in position 5

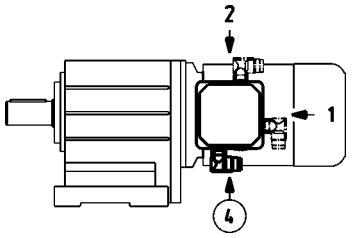



ICN connector

Dimensions of KK2/KK3

- For motors with connectors, the connector position can be selected in accordance with the terminal box position.
- If preferred positions are not specified in the order, the connector will be positioned as circled on the diagram below.

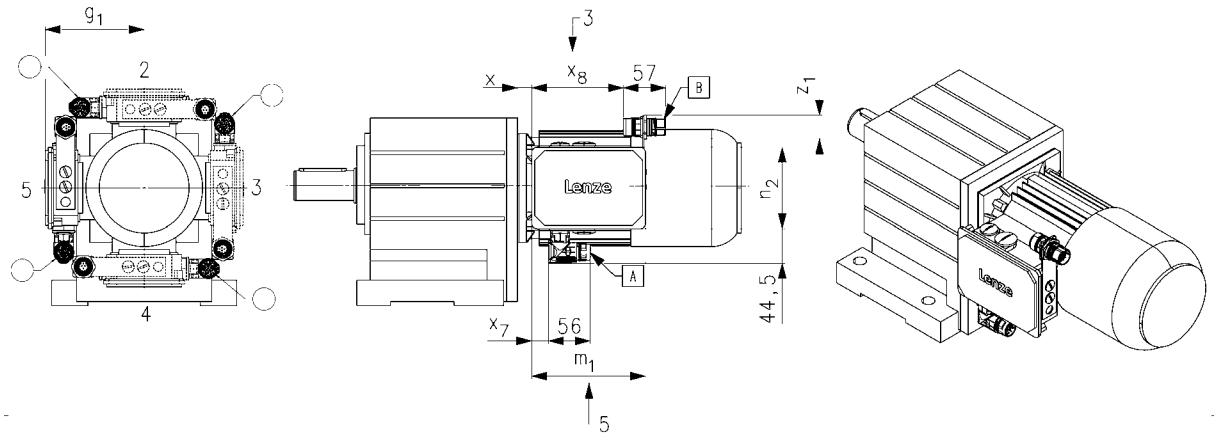

Size							
Motor							
	x	g_1	m_1	n_2	x_7	x_8	$z_{1, max}$
	[mm]	[mm]	[mm]	[mm]	[mm]	[mm]	[mm]
063	13	107	136	103	16	109	43
071	15	118					
080	17	132	152	121	23	125	41
090	22	137					
100	23	147					
112	25	158					
132	38	187	195	125	27	166	71



ICN connector

Connector position when using KK2/KK3

Terminal box in position 2

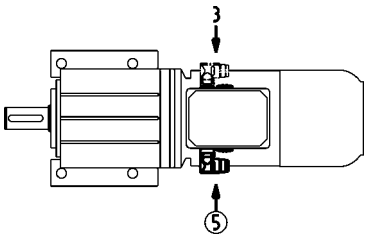

Terminal box in position 3

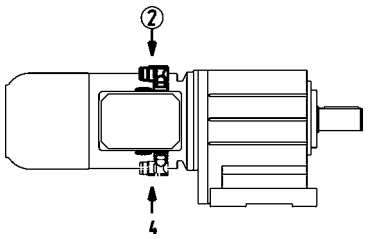

Terminal box in position 4

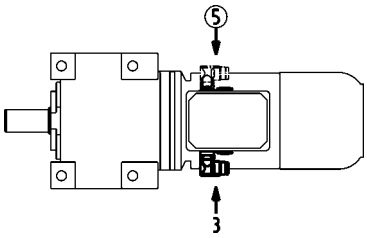

Terminal box in position 5

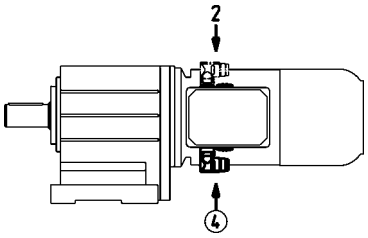

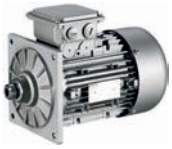

ICN connector

Blower connection

The blower is also optionally available with an ICN connector fixed to the terminal box of the blower for exceptionally fast commissioning. The connectors are fitted with a bayonet fixing, which is also compatible with conventional union nuts. Existing counter plugs can therefore continue to be used without difficulty.

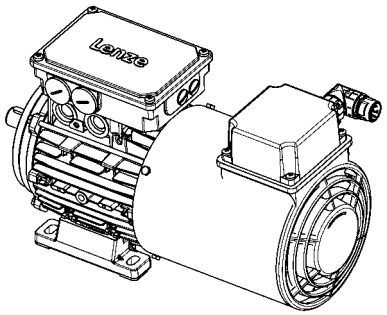

► Blower 1-ph

Pin assignment			
Contact	Designation	Meaning	
PE	PE	PE conductor	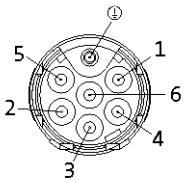
1	U1	Fan	
2	U2		
3		Not assigned	
4			
5			
6			

► Blower 3-ph

Pin assignment			
Contact	Designation	Meaning	
PE	PE	PE conductor	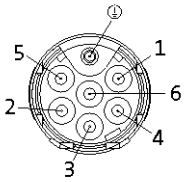
1	U	Phase U power	
2		Not assigned	
3	V	Phase V power	
4		Not assigned	
5			
6	W	Phase W power	

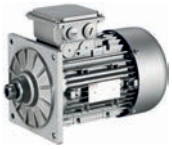

ICN connector

Dimensions of blower

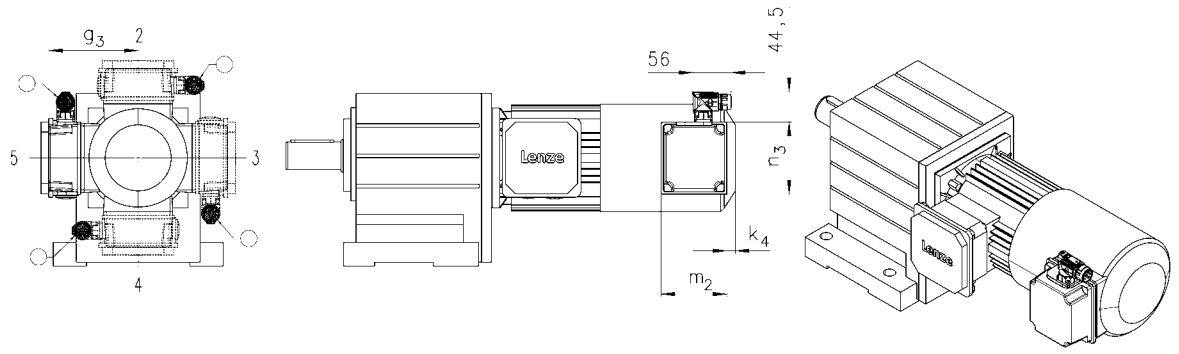

Size				
Motor				
	k_4	g_3	m_2	n_3
	[mm]	[mm]	[mm]	[mm]
063	12	115	95	105
071		122		
080	13	132	96	106
090	22	141	95	105
100		150		
112		162		
132	32	182		
160	31	209	96	106
180				
225				

► In addition, the cover of the blower terminal box (including connectors) can be rotated progressively through 90° if necessary.

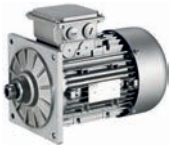

M12 connector

IG128-24V-H incremental encoder connection

As a standard this incremental encoder is equipped with a connection cable of about 0.5 m length and with a common industry standard M12 connector at its end.

Pin assignment			
Contact	Designation	Meaning	
1	$+U_B$	Supply +	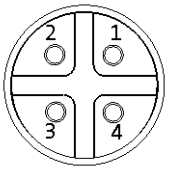
2	B	Track B	
3	GND	Mass	
4	A	Track A	

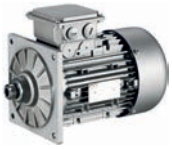

HAN connector

10E

In the case of the rectangular HAN-10E connectors, all six ends of the three winding phases are taken out to the power contacts. The motor circuit is therefore determined in the mating connector.

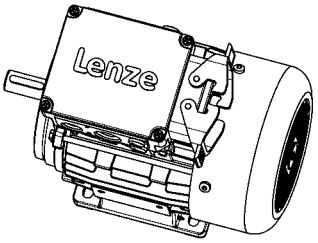

Pin assignment	
Contact	Meaning
1	Terminal board: U1
2	Terminal board: V1
3	Terminal board: W1
4	Brake +/AC
5	Brake -/AC
6	Terminal board: W2
7	Terminal board: U2
8	Terminal board: V2
9	Thermal sensor: +KTY/PTC/TKO
10	Thermal sensor: KTY/PTC/TKO

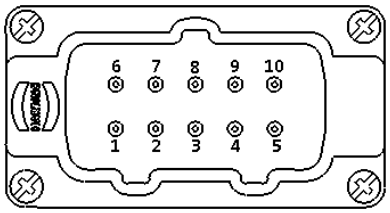



HAN connector

Modular

The connector is available with two different power modules (16 A or 40 A), depending on the rated motor current. The motor connection is determined in the terminal box and must be checked before commissioning.

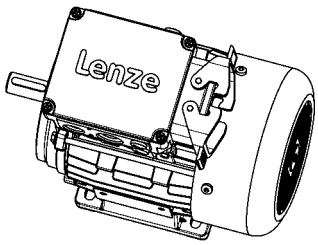

► HAN modular 16 A

Pin assignment			
Module	Contact	Meaning	
B		Dummy module	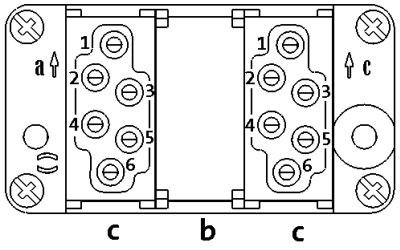
C	1	Thermal sensor: +KTY/PTC/TKO	
	2	Brake +/AC	
	3	Brake -/AC	
	4	Rectifier: Switching contact	
	5		
	6	Thermal sensor: KTY/PTC/TKO	

► HAN modular 40 A

Pin assignment			
Module	Contact	Meaning	
A	1	Terminal board: U1	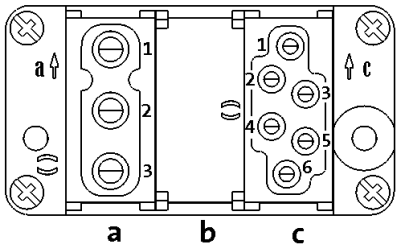
	2	Terminal board: V1	
	3	Terminal board: W1	
B		Dummy module	
C	1	Thermal sensor: +KTY/PTC/TKO	
	2	Brake +/AC	
	3	Brake -/AC	
	4	Rectifier: Switching contact	
	5		
	6	Thermal sensor: KTY/PTC/TKO	

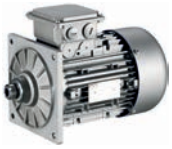

HAN connector

Motor terminal box with HAN connectors - built-on accessories assignment: 2-pole motors

Motor type	M□□MAXX M□□MABR	M□□MAZE M□□MABZ	M□□MALL M□□MABL	M□□MALZ
Motor frame size				
	Terminal box with HAN connector			
063-11 063-31	HAN-10E HAN modular			
071-11 071-31	HAN-10E HAN modular	HAN-10E HAN modular	HAN-10E HAN modular	HAN-10E HAN modular
080-11 080-31	HAN-10E HAN modular	HAN-10E HAN modular	HAN-10E HAN modular	HAN-10E HAN modular
090-31 090-11	HAN-10E HAN modular	HAN-10E HAN modular	HAN-10E HAN modular	HAN-10E HAN modular
100-31 100-41	HAN-10E HAN modular	HAN-10E HAN modular	HAN-10E HAN modular	HAN-10E HAN modular
112-31 112-41	HAN-10E HAN modular	HAN-10E HAN modular	HAN-10E HAN modular	HAN-10E HAN modular
132-21	HAN modular	HAN modular	HAN modular	HAN modular



HAN connector

Motor terminal box with HAN connectors - built-on accessories assignment: 4-pole / 6-pole motors

Motor type	M□□MAXX M□□MABR	M□□MAZE M□□MAHA M□□MABZ M□□MABH	M□□MALL M□□MABL	M□□MALZ M□□MALH
Motor frame size				
	Terminal box with HAN connector			
063-02 063-22	HAN-10E HAN modular			
063-12 063-32 063-42	HAN-10E HAN modular			
071-32 071-42 071-13 071-33	HAN-10E HAN modular	HAN-10E HAN modular	HAN-10E HAN modular	HAN-10E HAN modular
080-13 080-32 080-33 080-42	HAN-10E HAN modular	HAN-10E HAN modular	HAN-10E HAN modular	HAN-10E HAN modular
090-12 090-32	HAN-10E HAN modular	HAN-10E HAN modular	HAN-10E HAN modular	HAN-10E HAN modular
100-12 100-32	HAN-10E HAN modular	HAN-10E HAN modular	HAN-10E HAN modular	HAN-10E HAN modular
112-22 112-32	HAN-10E HAN modular	HAN-10E HAN modular	HAN-10E HAN modular	HAN-10E HAN modular
132-12 132-22 132-32	HAN modular	HAN modular	HAN modular	HAN modular
160-22 160-32	HAN modular			

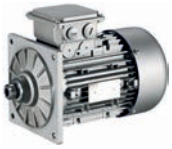

HAN connector

Dimensions

- For motors with connectors, the connector position can be selected in accordance with the terminal box position.
- Unless the connector position is specified, it will be supplied in position 1.

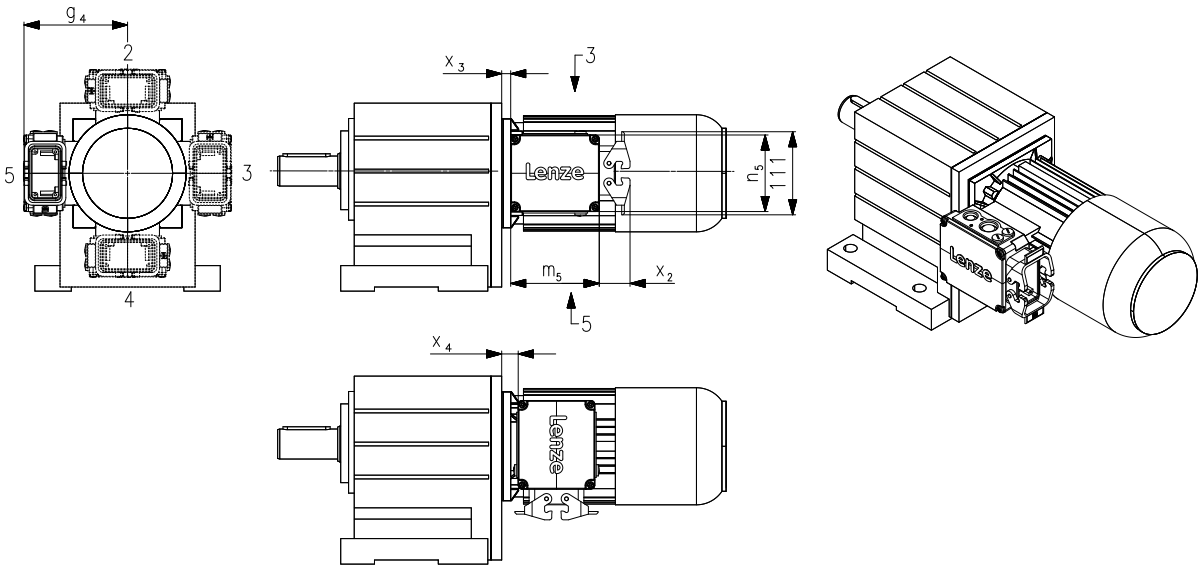

Size			
Motor			
	g_4	x_3	x_4
	[mm]	[mm]	[mm]
063	120	5.00	6.00
071	129	7.00	8.00
080	138	11.0	19.0
090	143	15.0	23.0
100	154	16.0	24.0
112	164	13.5	21.5
132	233	34.5	4.50
160	248	39.0	9.00

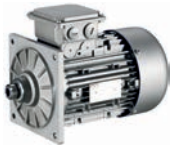

HAN connector

Position of connector

Connector in position 2

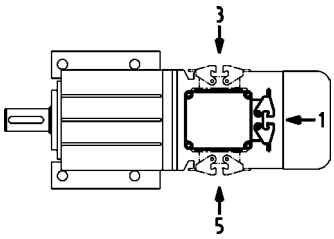

Connector in position 3

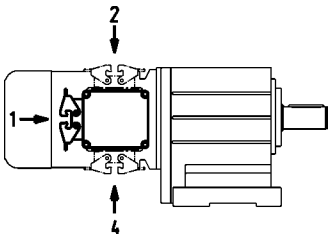

Connector in position 4

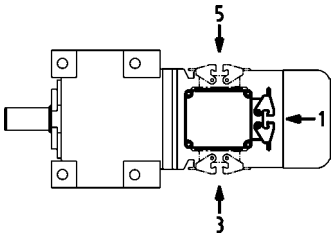

Connector in position 5

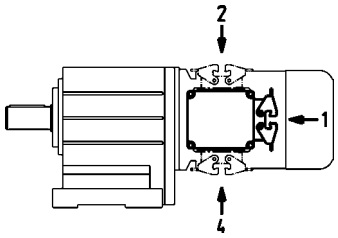

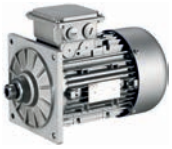

Handwheel

Design	Handwheel made from alloy, smooth wheel surface
Function	Manual operation: • Emergency operation • Setting-up operation for machines/systems
Note	The increased moment of inertia must be taken into account during project planning! For frequent switching operations, in particular if the direction of rotation changes: Please contact Lenze.

Size	Moment of inertia	Mass
Motor	Additional	Additional
	J	m
	[kgcm²]	[kg]
071	16.0	0.60
080	16.0	0.60
090	16.0	0.60
100	16.0	0.60
112	16.0	0.60
132	139	1.80



Handwheel

Dimensions, self-ventilated (4/6-pole)

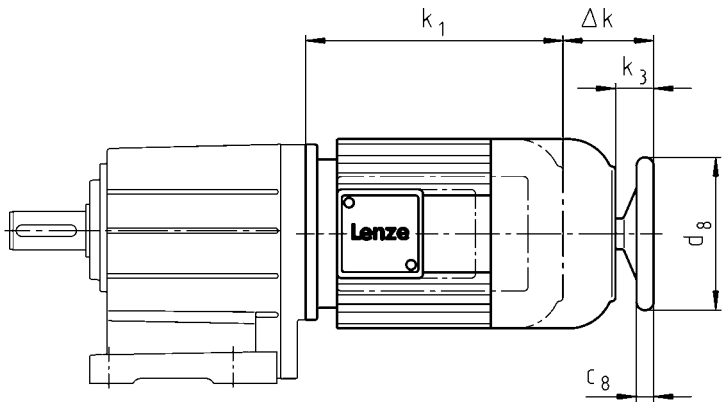

Motor type	
Built-on accessories	M□□MAHA M□□MABH M□□MALH

Motor frame size				
	Δ k	k_3	c_8	d_8
	[mm]	[mm]	[mm]	[mm]
071-32 071-42 071-13 071-33	70	34.0	18.0	160
080-32 080-42 080-13 080-33	91	34.0	18.0	160
090-12 090-32	80	32.0	18.0	160
100-12 100-32	94	42.0	18.0	160
112-22 112-32	107	39.0	18.0	160
132-12 132-22 132-32	126	50.0	26.0	250

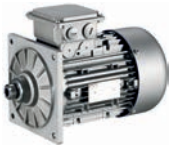

Centrifugal mass

Note	The increased moment of inertia must be taken into account during project planning! For frequent switching operations, in particular if the direction of rotation changes: Please contact Lenze.
Function	Increased motor centrifugal mass for smooth starting/braking
Design	Integral fan made from cast iron

	Moment of inertia	**Mass**
Motor frame size	Additional	Additional
	J	m
	[kgcm²]	[kg]
071	18.0	1.20
080	29.0	1.40
090-□1	83.0	2.80
090-□2	55.0	2.00
100	77.0	2.50
112	153	3.80
132	356	6.00



2nd shaft end

Dimensions, self-ventilated (2-pole)

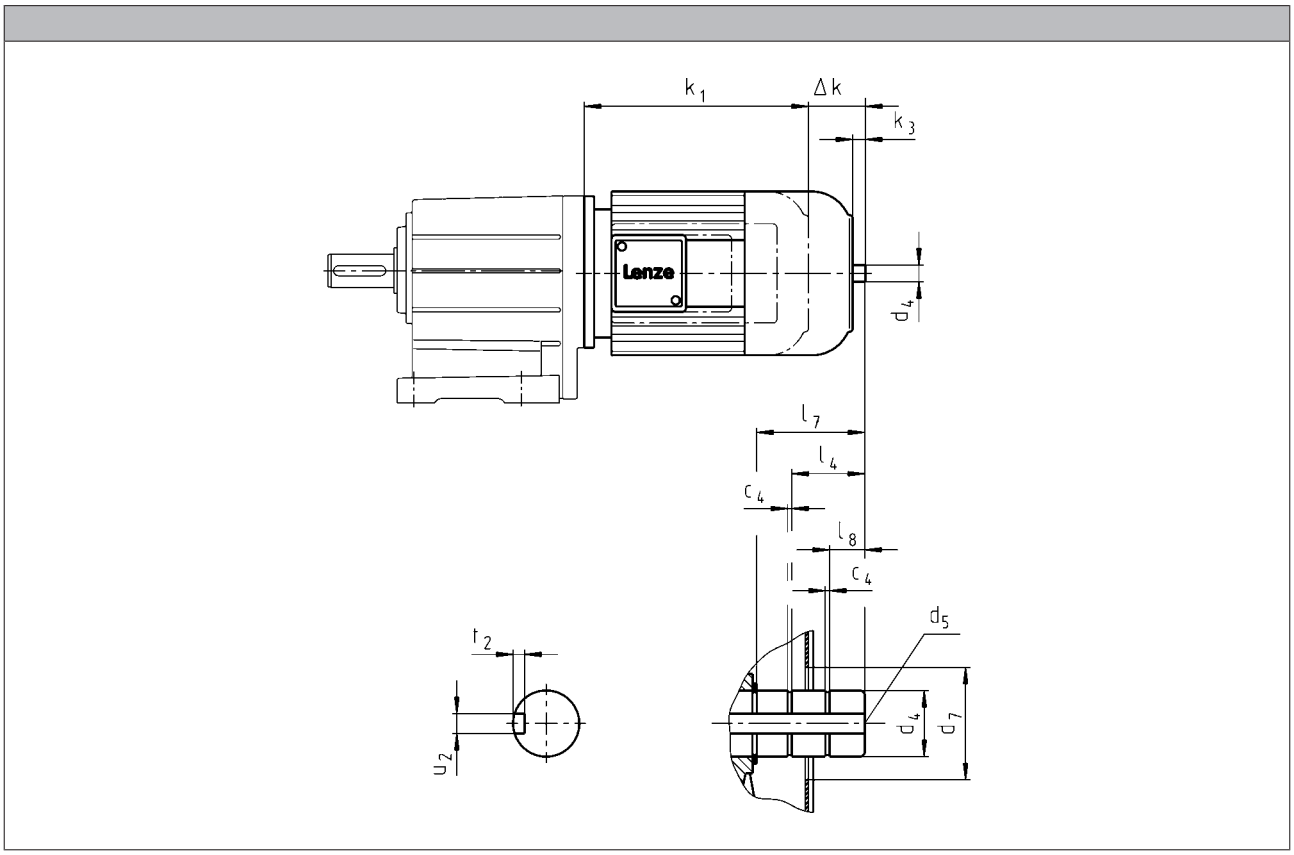

Motor type	
Built-on accessories	M□□MAZE M□□MABZ M□□MALZ

Motor frame size												
	Δk	k_3	c_4	d_4	d_4	d_5	d_7 [1]	l_4	l_7	l_8	u_2	t_2
				h6	j6							
	[mm]	[mm]	[mm]	[mm]	[mm]	[mm]	[mm]	[mm]	[mm]	[mm]	[mm]	[mm]
071-11 071-31	47	11.0	1.10	14.0		M5	34.0		19.0	3.00	5.00	3.00
080-11 080-31	68	9.00	1.30	19.0		M6	34.0		19.0	4.50	6.00	3.20
090-11 090-31	57	9.00	1.30		20.0	M6	34.0		19.5	5.50	6.00	3.50
100-31 100-41	71	18.5	1.30		25.0	M10	34.0	17.0	32.5	10.5	8.00	4.00
112-31 112-41	84	16.0	1.30		25.0	M10	34.0	17.0	28.5	7.00	8.00	4.00
132-21	101	24.5	1.60		30.0	M10	48.0	24.5	42.0	8.50	8.00	4.00

[1] During operation, appropriate measures must be taken to make fan cover opening safe.



2nd shaft end

Dimensions, self-ventilated (4/6-pole)

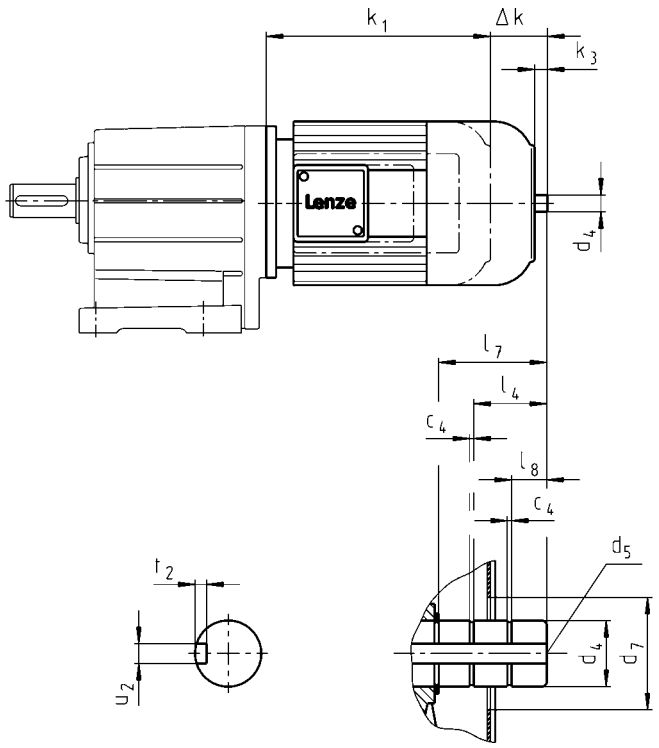

Motor type	
Built-on accessories	M□□MAZE M□□MABZ M□□MALZ

Motor frame size												
	Δk	k_3	c_4	d_4	d_4	d_5	d_7 [1]	l_4	l_7	l_8	u_2	t_2
				h6	j6							
	[mm]	[mm]	[mm]	[mm]	[mm]	[mm]	[mm]	[mm]	[mm]	[mm]	[mm]	[mm]
071-32 071-42 071-13 071-33	47	11.0	1.10	14.0		M5	34.0		19.0	3.00	5.00	3.00
080-32 080-42 080-13 080-33	68	9.00	1.10	14.0		M5	34.0		19.0	4.50	5.00	3.00
090-12 090-32	57	9.00	1.10	14.0		M5	34.0		19.0	5.00	5.00	3.00
100-12 100-32	71	18.5	1.30		20.0	M6	34.0	17.0	32.5	10.5	6.00	3.50
112-22 112-32	84	16.0	1.30		20.0	M6	34.0	17.0	28.5	7.00	6.00	3.50
132-12 132-22 132-32	101	24.5	1.60		30.0	M10	46.0	24.5	42.0	8.50	8.00	4.00

[1] During operation, appropriate measures must be taken to make fan cover opening safe.



Protection cover

Dimensions, self-ventilated (2-pole)

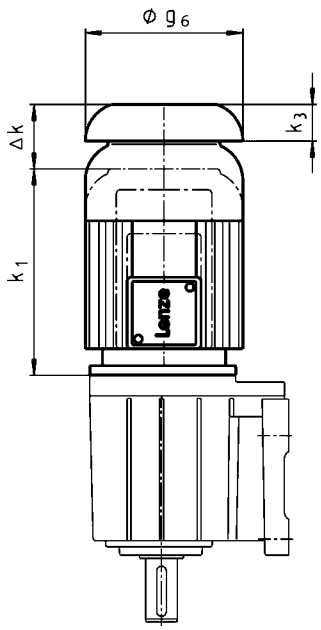

	Motor type					
	M□□MAXX	M□□MABR	M□□MABL	M□□MALL		

Motor frame size						
	Δ k	Δ k	Δ k	Δ k	k_3	g_6
	[mm]	[mm]	[mm]	[mm]	[mm]	[mm]
063-11 063-31	26	66			11.0	123
071-11 071-31	26	78	78	26	12.0	138
080-11 080-31	26	99	99	30	16.0	156
090-11 090-31	26	94	94	26	15.0	176
100-31 100-41	31	107	107	107	17.0	194
112-31 112-41	31	121	121	31	18.0	218
132-21	31	141	141	31	20.0	257



Protection cover

Dimensions, self-ventilated (4/6-pole)

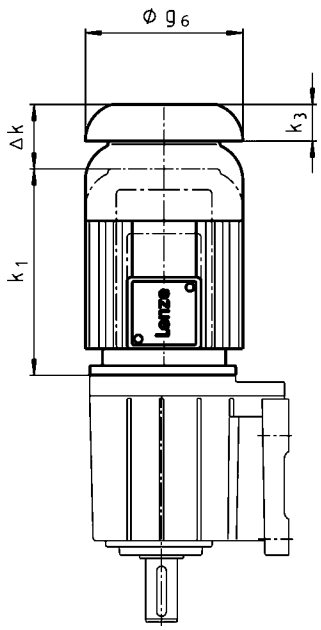

	Motor type							
	M□□MAXX	M□□MABR	M□□MABS M□□MABI M□□MABA	M□□MABL	M□□MARS M□□MAIG M□□MAAG	M□□MALL		

Motor frame size								
	Δ k	Δ k	Δ k	Δ k	Δ k	Δ k	k_3	g_6
	[mm]	[mm]	[mm]	[mm]	[mm]	[mm]	[mm]	[mm]
063-02 063-22		97	160		97		11.0	123
063-12 063-32 063-42	26	66	129		82		11.0	123
071-32 071-42 071-13 071-33	26	78	122	78	78	26	12.0	138
080-32 080-42 080-13 080-33	26	99	137	99	127	30	16.0	156
090-12 090-32	26	94	131	94	113	26	15.0	176
100-12 100-32	31	107	132	107	112	107	17.0	194
112-22 112-32	31	121	151	121	111	31	18.0	218
132-12 132-22 132-32	31	141	156	141	134	31	20.0	257
160-22 160-32	37	142	228		120		25.0	310



Protection cover

Dimensions, forced ventilated (2-pole)

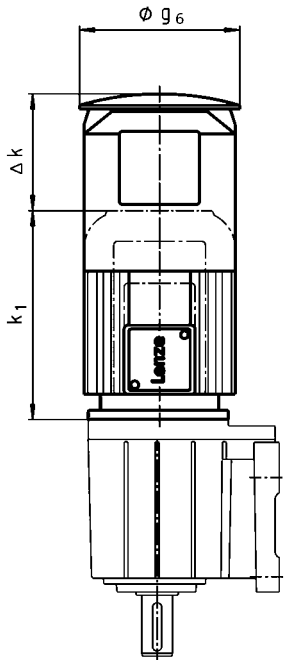

	Motor type		
	M□□MAXX	M□□MABR	

Motor frame size			
	Δ k	Δ k	g_6
	[mm]	[mm]	[mm]
063-11 063-31	169	209	133
071-11 071-31	165	202	150
080-11 080-31	168	224	170
090-11 090-31	157		
100-31 100-41	137	198	210
112-31 112-41	135	216	249
132-21	140	226	300

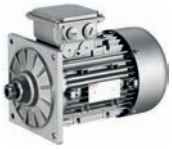

Protection cover

Dimensions, forced ventilated (4/6-pole)

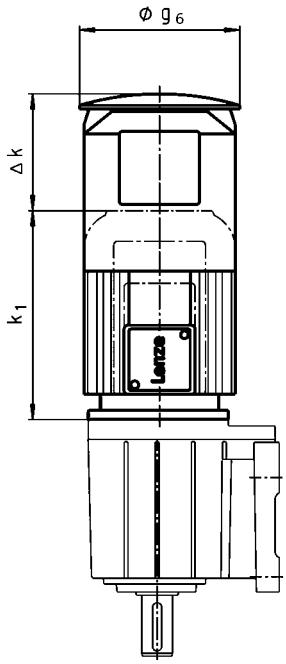

	Motor type			
	M□□MAXX	M□□MABR M□□MABS M□□MABI M□□MABA	M□□MARS M□□MAIG M□□MAAG	

Motor frame size				
	Δ k	Δ k	Δ k	g_6
	[mm]	[mm]	[mm]	[mm]
063-12 063-32 063-42	169	209	209	133
071-32 071-42 071-13 071-33	165	202	202	150
080-32 080-42 080-13 080-33	168	224	224	170
090-12 090-32	157	210	210	188
100-12 100-32	137	198	198	210
112-22 112-32	135	216	216	249
132-12 132-22 132-32	140	226	226	300
160-22 160-32	155	267	267	338

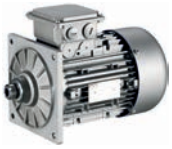

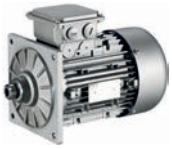

15628582

Lenze SE
Hans-Lenze-Straße 1
D-31855 Aerzen
Phone: +49 (0)5154 82-0
Telefax: +49 (0)5154 82 28 00

www.Lenze.com