L-force catalogue

Automation systems
Drive solutions

Controls
Inverters
Motors
Gearboxes
Engineering Tools

Inverters: Servo Drives 9400 HighLine

Lenze
As easy as that.

Contents of the L-force catalogue

About Lenze		Lenze makes many things easy for you.	
		A matter of principle: the right products for every application.	
		L-force product portfolio	
Automation systems		Controller-based Automation	1.1
		Drive-based automation	1.2
Drive solutions		HighLine tasks	2.1
		StateLine tasks	2.2
		BaseLine tasks	2.3
Controls	Cabinet Controller	Controller 3200 C	3.1
		Controller c300	3.2
	Panel Controller	Controller p500	3.3
		Controller p300	3.4
	'	I/O system 1000	3.5
		Monitor Panel	3.6
Inverters	Decentralised	Inverter Drives 8400 protec	4.1
		Inverter Drives 8400 motec	4.2
	Cabinet	Servo Drives 9400 HighLine	4.4
		Inverter Drives 8400 TopLine	4.5
		Servo Inverters i700	4.6
		Inverter Drives 8400 HighLine	4.7
		Inverter Drives 8400 StateLine	4.8
		Inverter Drives 8400 BaseLine	4.10
Motors	Servo motors	MCS synchronous servo motors	5.1
		MD□KS synchronous servo motors	5.2
		MQA asynchronous servo motors	5.3
		MCA asynchronous servo motors	5.4
	Three-phase AC motors	MF three-phase AC motors	5.5
		MH three-phase AC motors	5.6
		MD three-phase AC motors	5.7
		m300 Lenze Smart Motor	5.8
		MD/MH basic three-phase AC motors	5.9
Gearboxes	Axial gearbox	g700-P planetary gearbox	6.1
		MPR/MPG planetary gearboxes	6.2
		g500-H helical gearbox	6.3
		GST helical gearboxes	6.4
		g500-S shaft-mounted helical gearbox	6.5
		GFL shaft-mounted helical gearboxes	6.6
	Right-angle gearbox	g500-B bevel gearbox	6.7
		GKR bevel gearboxes	6.8
		GKS helical-bevel gearboxes	6.9
		GSS helical-worm gearboxes	6.10
	Motor data	Assignment see above	6.11
Engineering Tools		Navigator	7.1
		Drive Solution Designer	7.2
		Drive Solution Catalogue	7.3
		Engineer	7.4
		PLC Designer	7.5
		VisiWinNET®	7.6
		EASY Starter	7.7

Selected portfolio

Additional portfolio

Lenze makes many things easy for you.

With our motivated and committed approach, we work together with you to create the best possible solution and set your ideas in motion - whether you are looking to optimise an existing machine or develop a new one. We always strive to make things easy and seek perfection therein. This is anchored in our thinking, in our services and in every detail of our products. It's as easy as that!

1

Developing ideas

Are you looking to build the best machine possible and already have some initial ideas? Then get these down on paper together with us, starting with small innovative details and stretching all the way to completely new machines. Working together, we will develop an intelligent and sustainable concept that is perfectly aligned with your specific requirements.

2

Drafting concepts

We see welcome challenges in your machine tasks, supporting you with our comprehensive expertise and providing valuable impetus for your innovations. We take a holistic view of the individual motion and control functions here and draw up consistent, end-to-end drive and automation solutions for you - keeping everything as easy as possible and as extensive as necessary.

3

Implementing solutions

Our easy formula for satisfied customers is to establish an active partnership with fast decision-making processes and an individually tailored offer. We have been using this simple principle to meet the ever more specialised customer requirements in the field of mechanical engineering for many years.

4

Manufacturing machines

Functional diversity in perfect harmony: as one of the few full-range providers in the market, we can provide you with precisely those products that you actually need for any machine task – no more and no less. Our L-force product portfolio, a consistent platform for implementing drive and automation tasks, is invaluable in this regard.

5

Ensuring productivity

Productivity, reliability and new performance peaks on a daily basis – these are our key success factors for your machine. After delivery, we offer you cleverly devised service concepts to ensure continued safe operation. The primary focus here is on technical support, based on the excellent application expertise of our highly-skilled and knowledgeable after-sales team.

A matter of principle: the right products for every application.

Lenze's extensive L-force product portfolio follows a very simple principle. The functions of our finely scaled products are assigned to the three lines Base-Line, State-Line or High-Line.

But what does this mean for you? It allows you to quickly recognise which products represent the best solution for your own specific requirements.

Powerful products with a major impact:
- Easy handling
- High quality and durability
- Reliable technologies in tune with the latest developments

Lenze products undergo the most stringent testing in our own laboratory. This allows us to ensure that you will receive consistently high quality and a long service life. In addition to this, five logistics centres ensure that the Lenze products you select are available for quick delivery anywhere across the globe. It's as easy as that!

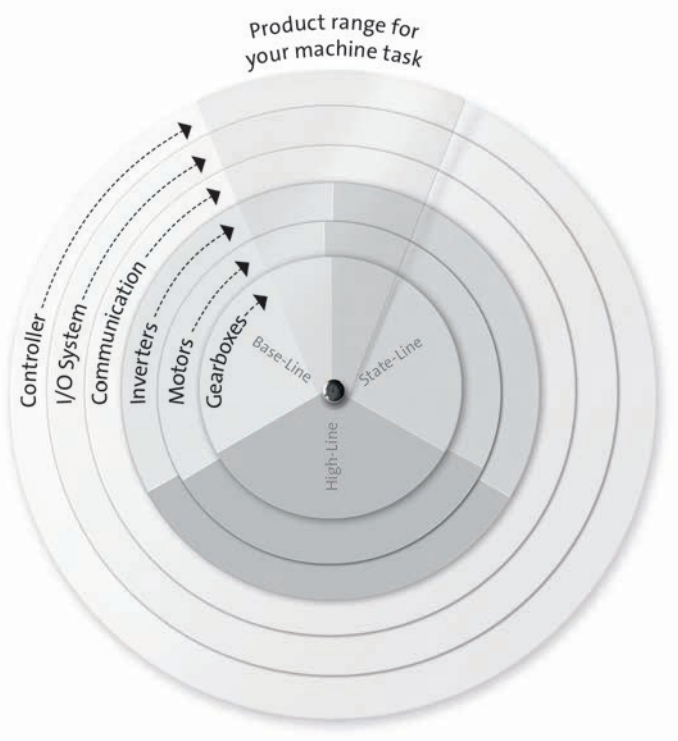

L-force product portfolio

Controls

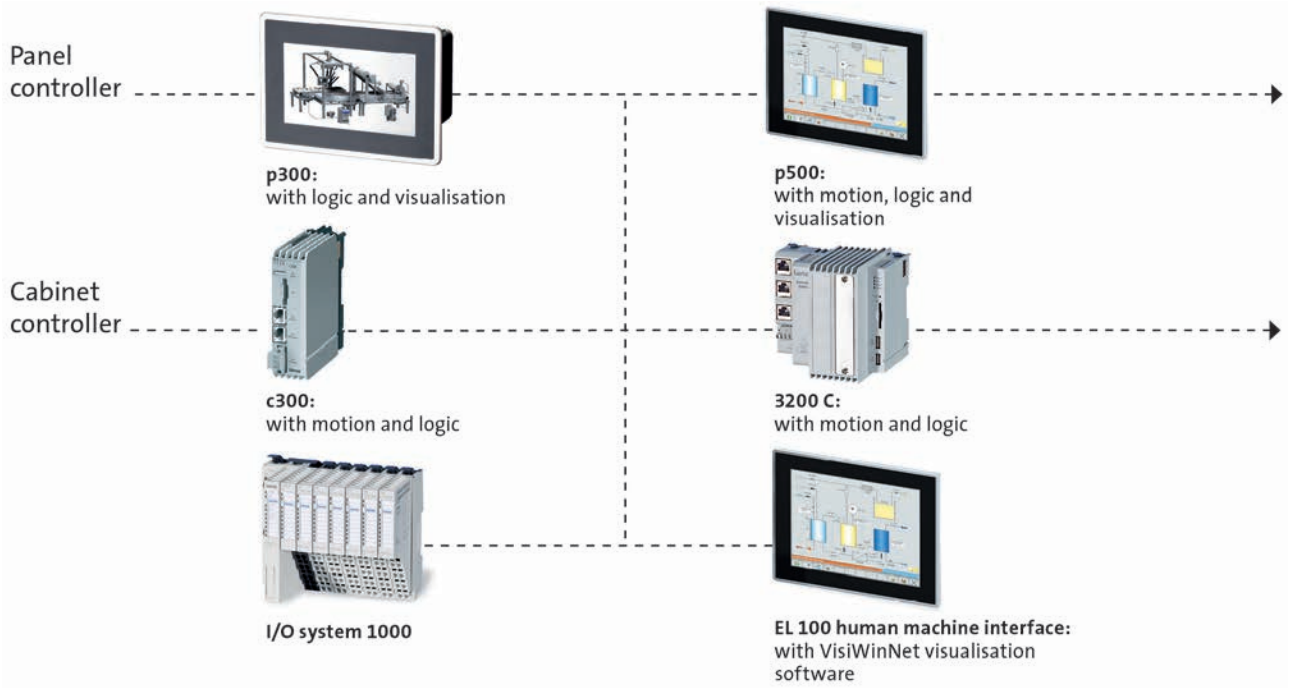

Engineering Tools

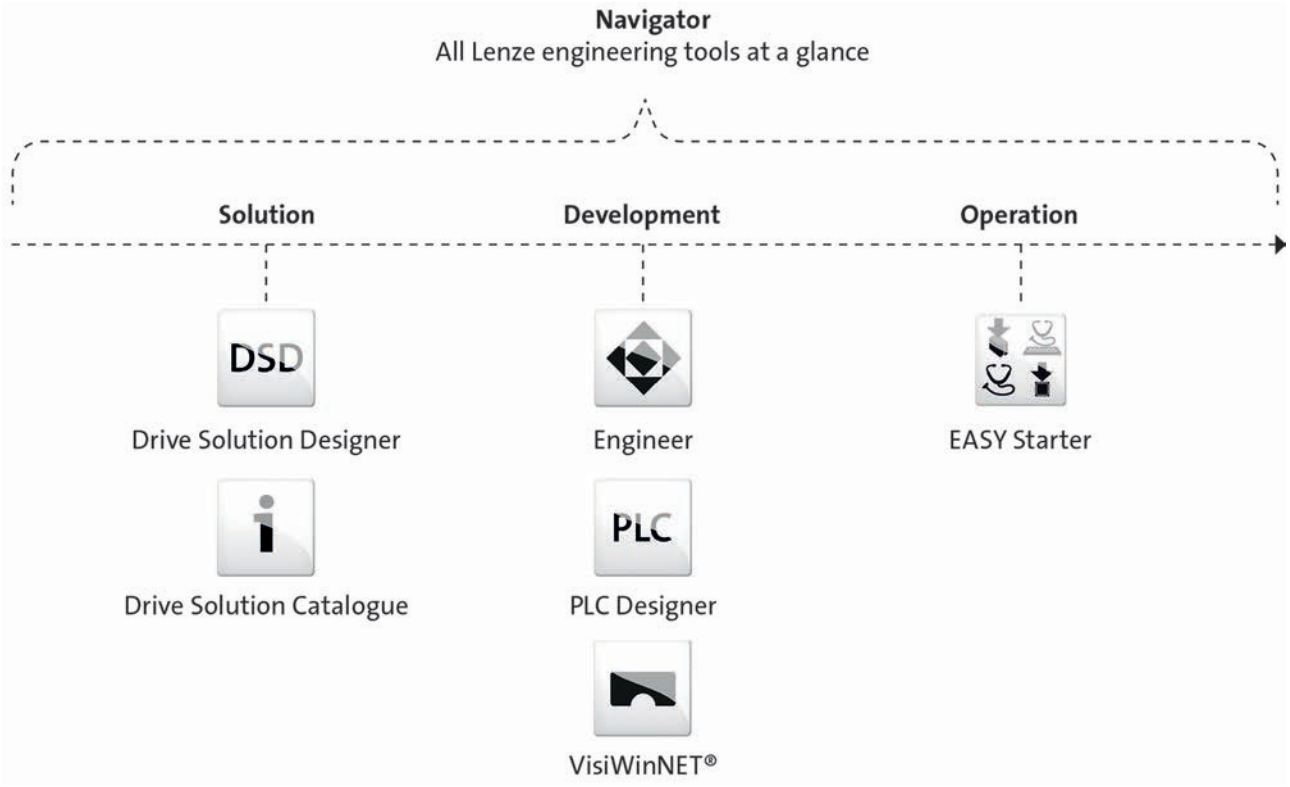

L-force product portfolio

Inverters

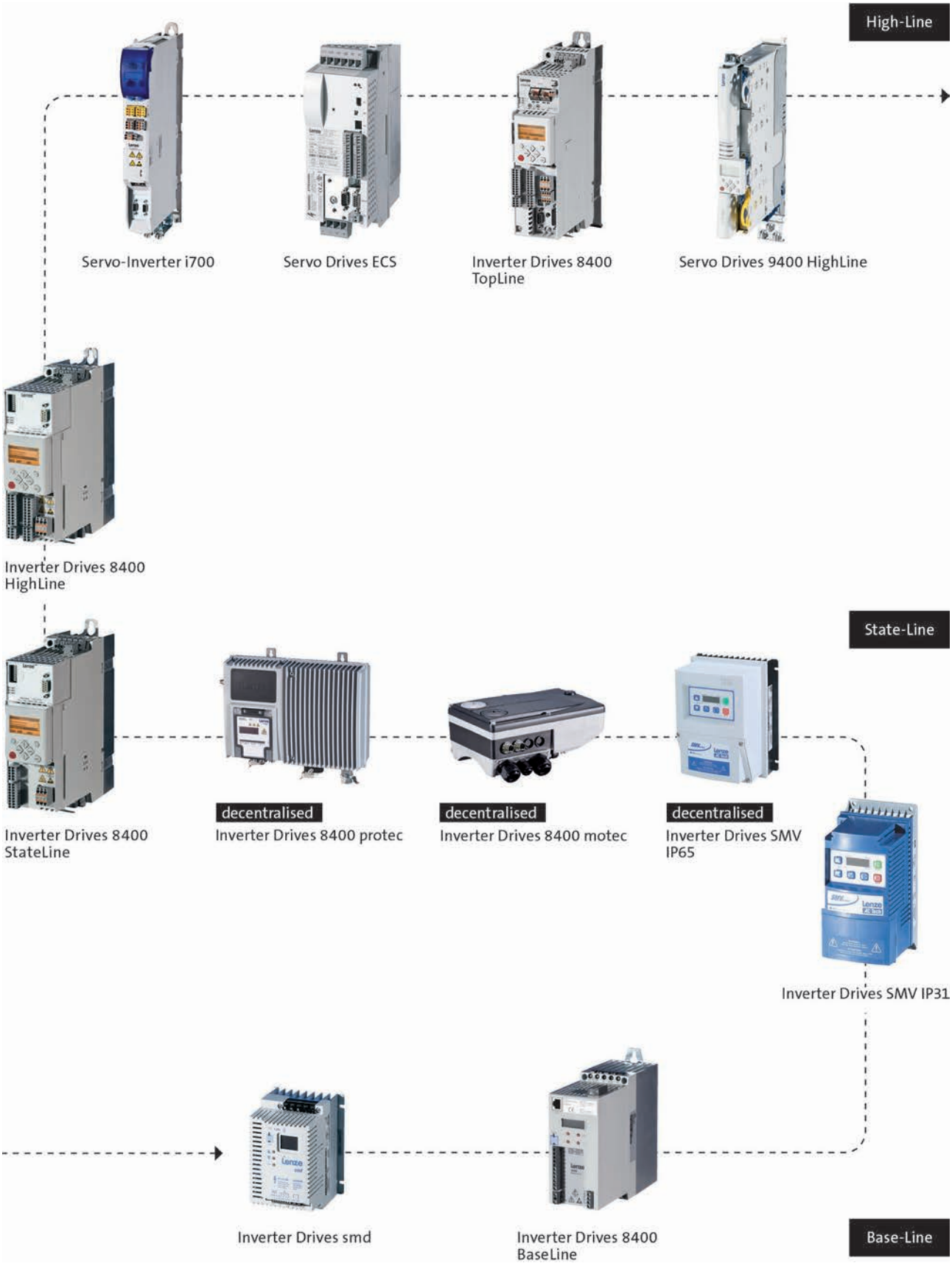

L-force product portfolio

Motors

High-Line

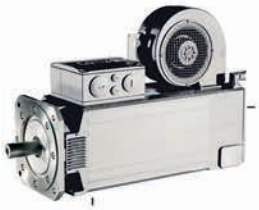

MQA asynchronous servo motors



SDSGS synchronous servo motors



MDXKS synchronous servo motors



Synchronous servo motors MCS



Asynchronous servo motors MCA



Asynchronous servo motors SDSGA

State-Line



MF three-phase AC motors



MH three-phase AC motors



MD three-phase AC motors



Basic MD/MH three-phase AC motors

Base-Line

L-force product portfolio

Gearboxes

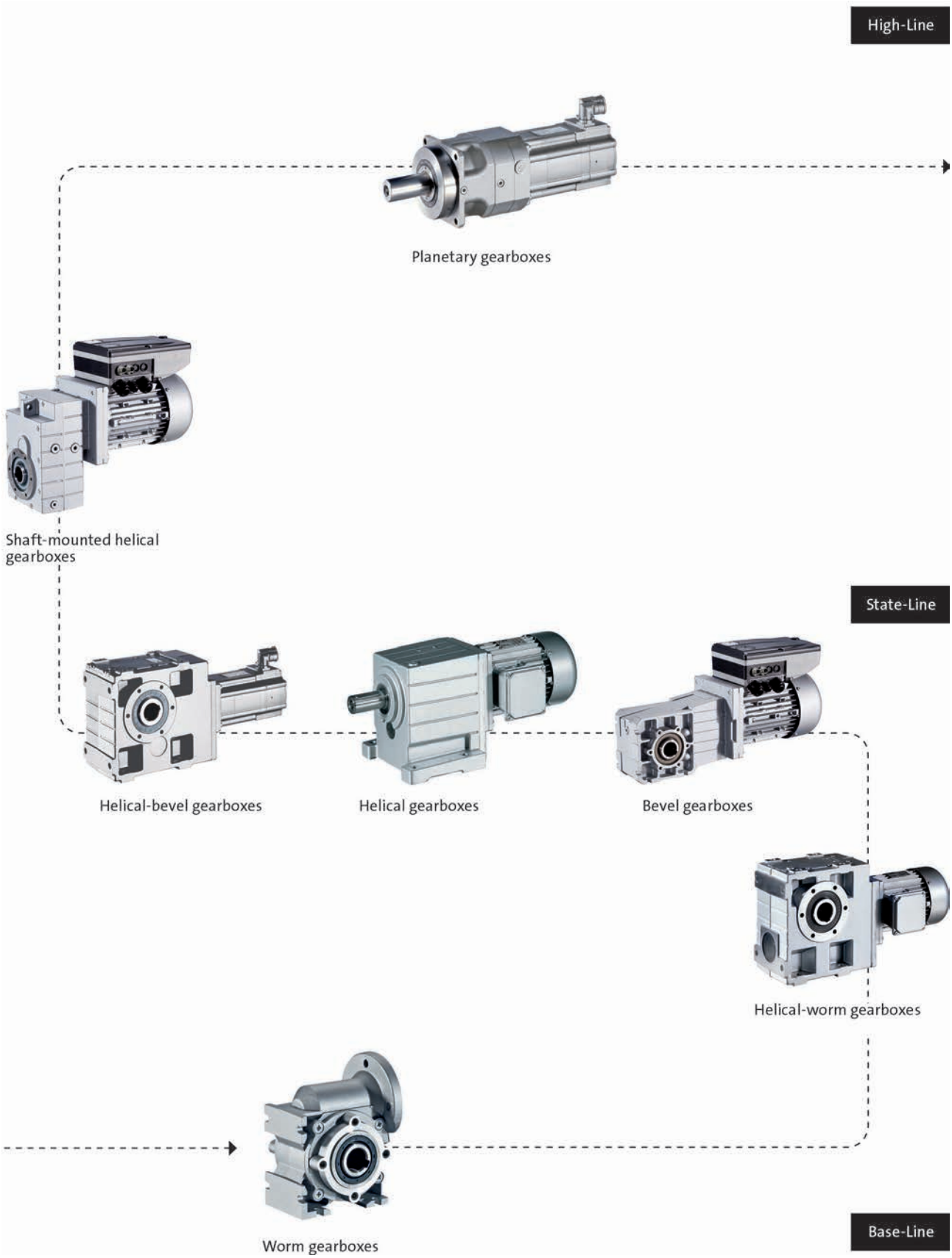

Servo Drives 9400 HighLine

0.37 to 370 kW



Servo Drives 9400 HighLine



Contents

General information		Product key	4.4 - 4
		Product key for power supply modules and regenerative power supply modules	4.4 - 6
		List of abbreviations	4.4 - 7
		Servo Drives 9400 Single Drive and Multi Drive	4.4 - 8
		Functions and features	4.4 - 9
		Basic dimensioning of axis modules	4.4 - 10
		Dimensioning for DC-bus operation	4.4 - 11
Technical data		Standards and operating conditions	4.4 - 13
		Rated data for Single Drive	4.4 - 14
		Rated data for Multi Drive	4.4 - 30
Interfaces		Mains connection	4.4 - 36
		Motor connection	4.4 - 38
		Connection diagrams	4.4 - 39
		Control connections	4.4 - 40
		Overview of modules	4.4 - 42
		Memory module	4.4 - 46
		Safety modules	4.4 - 48
		Extension module: digital frequency	4.4 - 50
		Communication module: CANopen	4.4 - 52
		DeviceNet communication module	4.4 - 54
		EtherCAT® communication module	4.4 - 56
		EtherNet/IP communication module	4.4 - 58
		POWERLINK communication module	4.4 - 60
		PROFIBUS communication module	4.4 - 62
		PROFINET communication module	4.4 - 64
Accessories		Installation backplane	4.4 - 66
		Brake modules	4.4 - 68
		Brake resistors	4.4 - 70
		Mains chokes	4.4 - 72
		RFI and mains filters	4.4 - 74
		Sinusoidal filters	4.4 - 76
	Regenerative power supply modules	Rated data for power supply modules	4.4 - 78
		Rated data for regenerative power supply modules	4.4 - 80
		Control connections	4.4 - 82
		Brake resistors of the regenerative power supply modules	4.4 - 83
		Interference suppression of the regenerative power supply modules	4.4 - 84
	'	DC input module	4.4 - 86
		DC-bus connection	4.4 - 87
		24 V power supply unit	4.4 - 90
		CAN bus connector	4.4 - 90
		USB diagnostic adapter	4.4 - 91
		X400 keypad	4.4 - 92
		X400 diagnosis terminal	4.4 - 92
		Shield connection kits for motor cable	4.4 - 93
		Other accessories	4.4 - 94



Product key

E94A S H E 002 4 A 33 EN PM –

Version
S – Single Drive
M – Multi Drive

Series
S – StateLine
H – HighLine

Design
E – Installation

Rated current [A]
(rounded)

002	032	245
003	047	292
004	059	366
007	086	460
009	104	572
013	145	635
017	172	695
024	202	

Voltage class of drive
4 – 3 x 400 V

MSI
A – SM0
B – SM100
D – SM300
E – SM301

MMI
11 – MM110
22 – MM220
33 – MM330
43 – MM430

MXI 2
LF
CA
DN
ET
EN
EP
EC
PM
ER
NN

MXI 1
LF
CA
DN
ET
EN
EP
EC
PM
ER
NN



LF – Digital frequency
CA – CANopen
DN – DeviceNet
ET – EtherCAT
EN – Ethernet
EP – ETHERNET Powerlink MN/CN
EC – ETHERNET Powerlink CN
PM – PROFIBUS
ER – PROFINET
NN – no module

MXI 1 – Slot for extension module 1
MXI 2 – Slot for extension module 2
MMI – Slot for memory module
MSI – Slot for safety module



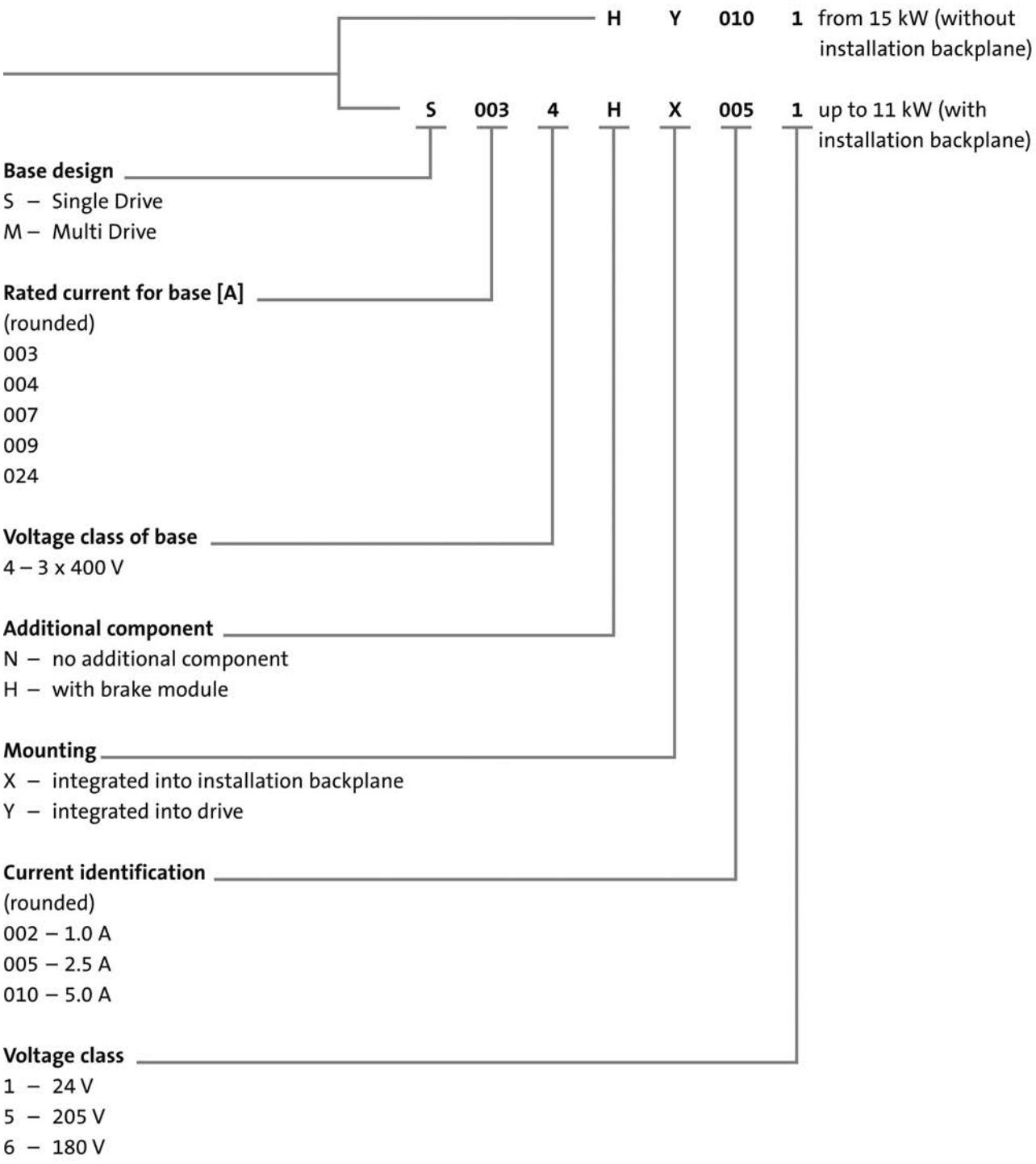
H Y 010 1 from 15 kW (without installation backplane)
S 003 4 H X 005 1 up to 11 kW (with installation backplane)
Base design
S – Single Drive
M – Multi Drive
Rated current for base [A]
(rounded)
003
004
007
009
024
Voltage class of base
4 – 3 x 400 V
Additional component
N – no additional component
H – with brake module
Mounting
X – integrated into installation backplane
Y – integrated into drive
Current identification
(rounded)
002 – 1.0 A
005 – 2.5 A
010 – 5.0 A
Voltage class
1 – 24 V
5 – 205 V
6 – 180 V



Product key for power supply modules and regenerative power supply modules

E94A	P	N	E	036	4					P	036	(from 36.2 kW without installation backplane)
E94A	R	N	E	024	4	A	22	EN	PM	P	036	

Version
P – Power supply module
R – Regenerative power supply module

Design
E – Installation

Rated current [A] (rounded)
Power supply module
010
036
100
245
Regenerative power supply module (data for regenerative feedback)
013
024

Voltage class of drive
4 – 3 x 400 V

MSI
A – SM0

MMI
22 – MM220

MXI 2
CA
EN
PM
NN

MXI 1
CA
EN
PM
NN

Base design
P - Power suply module

Rated current for base [A]
010
036



CA – CANopen
EN – Ethernet
PM – PROFIBUS
NN – no module

MXI 1 – Slot for extension module 1
MXI 2 – Slot for extension module 2
MMI – Slot for memory module
MSI – Slot for safety module



List of abbreviations

b	[mm]	Dimensions
C_{th}	[KWs]	Thermal capacity
f_{ch}	[kHz]	Rated switching frequency
h	[mm]	Dimensions
i		Ratio
$I_{N, out}$	[A]	Rated output current
$I_{N, AC}$	[A]	Rated mains current
$I_{N, DC}$	[A]	Rated DC-bus current
$I_{red, out}$	[A]	Reduced output current
$I_{red, DC}$	[A]	Reduced DC-bus current
m	[kg]	Mass
n_{max}	[r/min]	Max. speed
P	[kW]	Typical motor power
P_N	[kW]	Rated power
$P_{max, 1}$	[kW]	Max. output power
$P_{max, 2}$	[kW]	Max. short-time output power
P_V	[kW]	Power loss
R_N	[Ω]	Rated resistance
R_{min}	[Ω]	Min. brake resistance
t	[mm]	Dimensions
U	[V]	Voltage drop
U_{AC}	[V]	Mains voltage
U_{DC}	[V]	DC supply
$U_{N, AC}$	[V]	Rated voltage
$U_{N, DC}$	[V]	Rated voltage
U_{out}	[V]	Output voltage

DIAG	Slot for diagnostic adapter
DIN	Deutsches Institut für Normung e.V.
EN	European standard
EN 60529	Degrees of protection provided by enclosures (IP code)
EN 60721-3	Classification of environmental conditions; Part 3: Classes of environmental parameters and their limit values
EN 61800-3	Electrical variable speed drives Part 3: EMC requirements including special test methods
IEC 61131-2	Programmable logic controllers Part 2: Equipment and tests
IEC	International Electrotechnical Commission
IEC 61508	Functional safety of electrical/electronic/programmable electronic safety-related systems
IM	International Mounting Code
IP	International Protection Code
MMI	Modular memory interface (memory module)
MSI	Modular safety interface (safety module)
NEMA	National Electrical Manufacturers Association
UL	Underwriters Laboratory Listed Product
UR	Underwriters Laboratory Recognized Product
VDE	Verband deutscher Elektrotechniker (Association of German Electrical Engineers)



Servo Drives 9400 Single Drive and Multi Drive

Many technical advances make our day-to-day life easier.
A simply click is all that is needed and

- the lights come on
- a safety belt is engaged
- you can surf the Internet
- you can take a snapshot of your family.

The Servo Drives 9400 will revolutionise your servo technology – with simple clicks.

Single drive
Our single-axis devices combine mains supply, DC bus and inverter in a single unit. The filter elements and the brake chopper are integrated in the servo inverter and allow autonomous use in distributed control cabinet installations. By using corresponding footprint filters (up to 55 kW), greater interference suppression can be achieved without additional mounting area.

Multi Drive
Our multi-axis drives are particularly suitable for centralised, compact multi-axis installations. The energy exchange via the DC bus reduces the power requirement on the mains side. The axes share the same mains supply, brake chopper and EMC filter. The parts requirements and installation work are thus significantly reduced. The integrated DC busbar system provides for compact installations for drives rated up to 15 kW.

HighLine - for decentralised control concepts
The Servo Drives 9400 HighLine feature intelligence in the drive and are therefore designed for decentralised motion control applications as well as for centralised control topologies.
Lenze provides pre-programmed technology applications, e.g. table positioning, electronic gearbox and synchronism with mark registration for solving various applications simply by parameter setting. The function block editor integrated into the L-force Engineer HighLevel (PC setup tool) enables you to adapt the functions in an easy and flexible manner.
The HighLine Servo Drive comes with the CANopen fieldbus, conventional I/Os, diagnostic LEDs, a diagnostic interface, a resolver and a universal encoder input on board.
In addition, the HighLine is equipped with two extension slots for communication or extension modules as well as one slot each for a memory module and a safety module, so that the drive can be optimally adapted to your requirements.

4.4

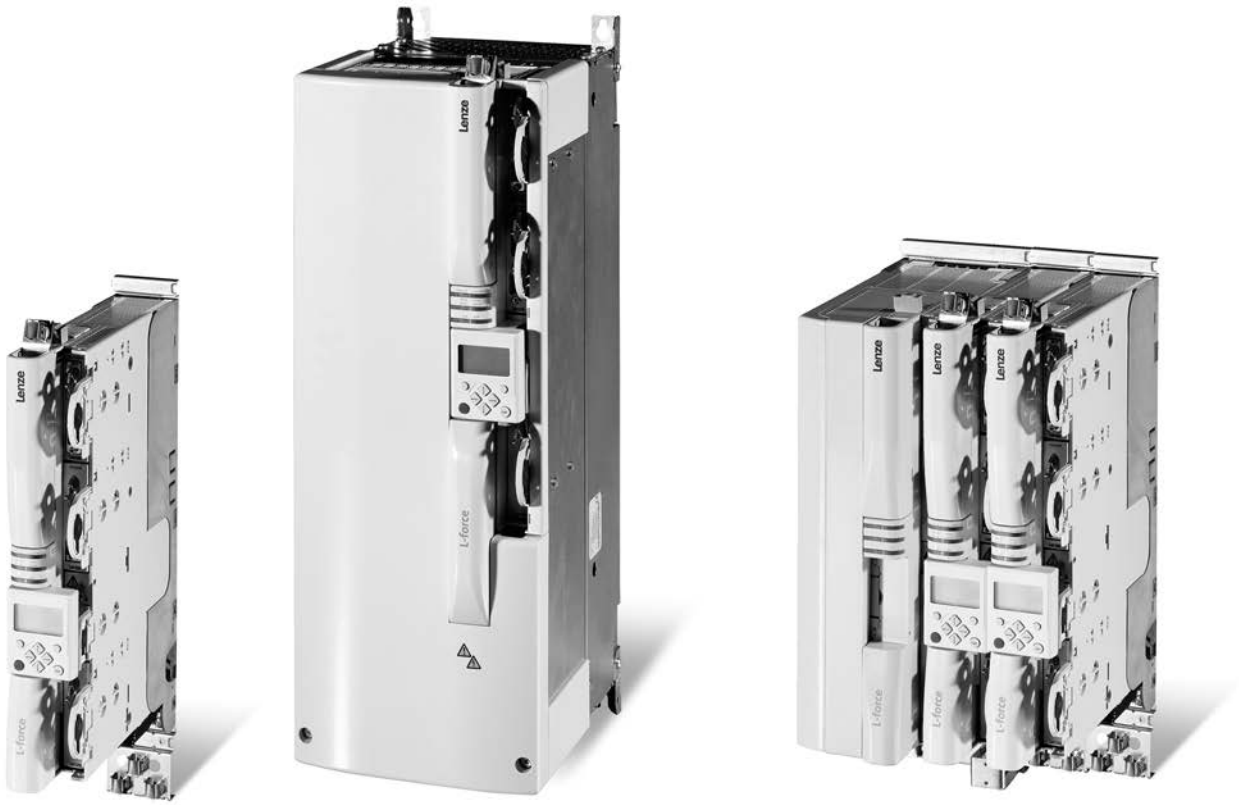

Servo Drives 9400 Single Drive and Servo Drives 9400 Multi Drive



Functions and features

Mode	
	Servo Drives 9400 HighLine
Conrol types, motor control	
Field-oriented servo control (SC)	For synchronous servo motors, asynchronous servo motors and three-phase asynchronous motors
Sensorless control (SLPSM)	For synchronous servo motors
V/f control (VFCplus)	For three-phase AC motors and asynchronous servo motor (linear or square-law)
Basic functions	
	Freely assignable user menu Free function block interconnection with extensive function library Parameter change-over DC brake function Brake management for brake control with low rate of wear Flying restart circuit S-shaped ramps for smooth acceleration PID controller
Operating modes to CiA 402	- Homing mode Interpolated position mode Cyclic synchronous position (csp) - cyclic position setpoint Cyclic synchronous velocity (csv) - cyclic velocity setpoint Cyclic synchronous torque (cst) - cyclic torque setpoint
Evaluation of ENP (ETS)	For Lenze servo motors
Technology applications	
	Speed actuating drive Torque actuating drive Electronic gearbox Synchronism with mark registration Table positioning Positioning sequence control
Advanced functions	Function blocks for cam function
Monitoring and protective measures	
	Short circuit Earth fault Overvoltage Undervoltage Motor phase failure Overcurrent $I^2 x$ t-Motor monitoring Overtemperature Motor overtemperature Brake chopper, brake resistance Fan Motor stalling
Diagnostics	
	Data logger, logbook, oscilloscope functions
Status display	6 LEDs
Diagnostic interface	Integrated For USB diagnostic adapter or keypad (diagnosis terminal)
Braking operation	
Brake chopper	Integrated in Single Drives
Brake resistor	External



Basic dimensioning of axis modules

The most important steps for dimensioning Single Drive and Multi Drive axis modules are listed here:

- **Motor power required**
  First, the maximum torque required M_{max}, the maximum speed n_{max}, the effective torque M_{eff} and - for geared motors - the transmission ratio i are determined from the system data.

- **Motor selection**
  Based on these values, the appropriate servo motor can be selected from the MCS (synchronous motors), MCA, MQA or MDFQA (asynchronous motors) ranges.

- **Selecting the axis module**
  The axis modules are selected on the basis of the maximum currents and power required.
  Depending on the drive, the 9400 Servo Drives and the power supply modules can be operated for overload time t_{ol} with maximum output current I_{max}, provided that the drive is then operated for recovery time t_{re} with a reduced output current.
  The switching frequency is automatically adapted to the rate of utilisation.

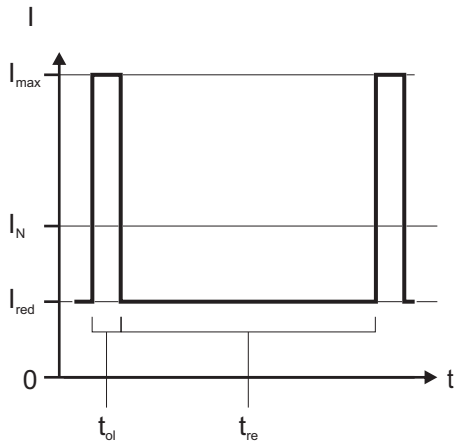

Maximum output current cycle

- **Braking operation**

If high moments of inertia are to be braked or if extended operation in generator mode is to be executed, braking energy can be transferred to an external brake resistor or converted into heat with Single Drive axis modules or with power supply modules via the integrated brake chopper.
The brake chopper can dissipate the continuous braking power P_N on a continual basis (case A) or the peak braking power P_{max} for the running time t_{on} followed by the recovery time t_{re} (case B).

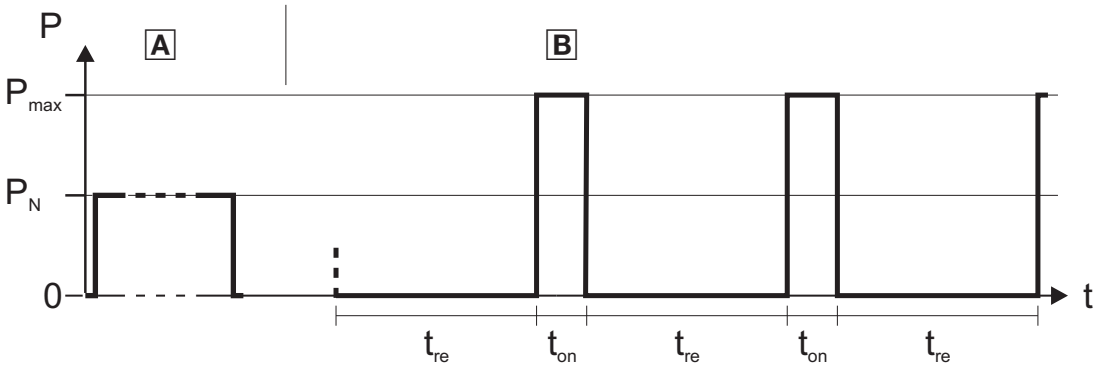

Brake chopper output power



Dimensioning for DC-bus operation

Dimensioning of DC-bus operation for axis modules

The most effective way of determining the correct power supply module for a multi-axis application is if the time/power diagrams for the complete machine cycle are available for all axis modules. Adding together the simultaneous individual power levels gives the required overall power and thereby the minimum power of the power supply module. The necessary braking power or regenerative power can be determined in the same way.

► The axis modules in the network can be easily dimensioned using the DSC. Including energy analysis and Energy Performance Certificate.

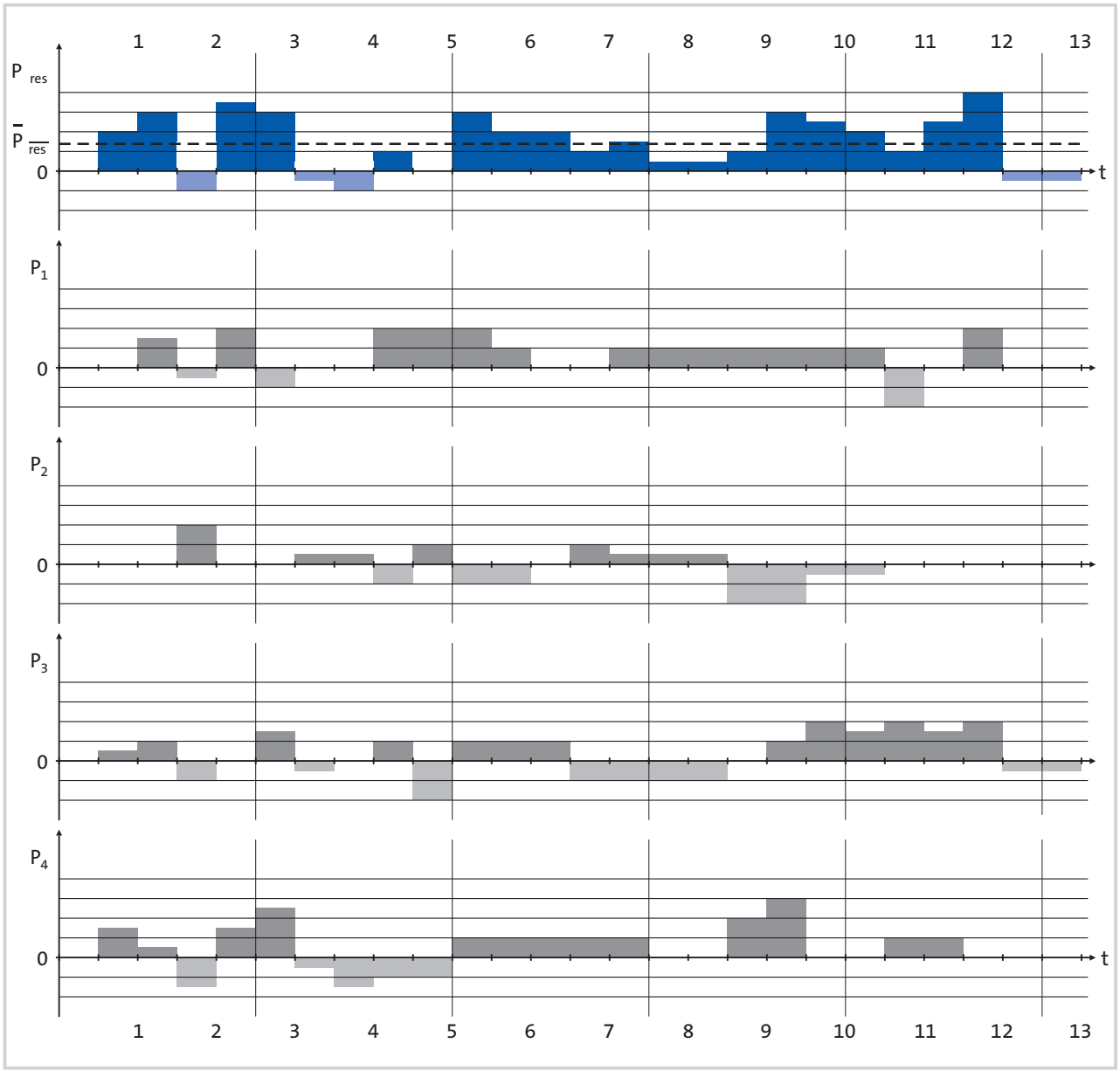

Time/power diagram of a multi-axis servo system
P_{1}...P_{4} = individual power of axis 1...axis 4
P_{res} = addition of individual powers
$P_{res\ 1\text{-}4}$ = mean value of individual powers





Standards and operating conditions

Conformity			
CE			Low-Voltage Directive
			2006/95/EC
EAC			TP TC 004/2011 (TR CU 004/2011) TP TC 020/2011 (TR CU 020/2011)
Approval			
UL 508C			Power Conversion Equipment (file no. E132659) [1]
Enclosure			
EN 60529			IP20 [2]
NEMA 250			Type 1
Climatic conditions			
Storage (EN 60721-3-1)			1K3 (temperature: -25 °C ... +60 °C)
Transport (EN 60721-3-2)			2K3 (temperature: -25 °C ... +70 °C)
Operation (EN 60721-3-3)			3K3 (temperature: -10°C ... +55°C)
Site altitude			
Amsl	H_{max}	[m]	4000
Vibration resistance			
Transport (EN 60721-3-2)			2M2
Operation (Germanischer Lloyd)			5 Hz ≤ f ≤ 13.2 Hz: ± 1 mm amplitude 13.2 Hz ≤ f ≤ 100 Hz: 0.7 g

[1] In preparation for the products: sinusoidal filters EZS3-180A200 to EZS3-480A200 and mains filters for regenerative power supply modules.
[2] Not in the wire range of the on the motor-side terminals

Supply form			
			Systems with earthed star point (TN and TT systems) Systems with high-resistance or isolated star point (IT systems)
Discharge current to PE			
EN 61800-5-1	I	[mA]	> 3.5 mA, fixed installation required, PE must be reinforced
Noise emission			
EN 61800-3			Cable-guided disturbance: Max. shielded motor cable lengths for compliance with EMC protection requirement C2 without external filters E94AS□E0024 to E94AS□E0244: 10 m E94AS□E0324 to E94AS□E1044: 50 m E94AS□E1454 to E94AS□E6954: 150 m
Noise immunity			
EN 61800-3			Category C3
Insulation resistance			
EN 61800-5-1			Overvoltage category III Above 2000 m amsl overvoltage category II
Degree of pollution			
EN 61800-5-1			2
Protective insulation of control circuits			
EN 61800-5-1			for digital inputs and outputs Safe mains isolation: double/reinforced insulation



Rated data for Single Drive

- ► The data is valid for operation at 3/PE AC 400 V or DC 565 V.
- ► Unless otherwise specified, the data refers to the default setting.
- ► Rated data for operation at 3/PE/AC 500 V
  DS_9400_0001
  Available for download at www.lenze.de/dsc

						
Typical motor power						
4-pole asynchronous motor	P	[kW]	0.37	0.75	1.50	3.00
Product key [2]						
Single Drive			E94AS□E0024	E94AS□E0034	E94AS□E0044	E94AS□E0074
Mains voltage range						
	U_{AC}	[V]	3/PE AC 180 V-0 % ... 550 V+0 %, 45 Hz-0 % ... 65 Hz+0 %			
Rated mains current						
With mains choke	$I_{N, AC}$	[A]	1.5	2.5	3.9	7.0
Without mains choke	$I_{N, AC}$	[A]	2.1	3.5	5.5	9.9
Rated output current						
	$I_{N, out}$	[A]	1.5	2.5	4.0	7.0
Rated switching frequency						
	f_{ch}	[kHz]	8			
Output current						
2 kHz	I_{out}	[A]	1.9 [3]	3.1 [3]	5.0 [3]	8.8 [3]
4 kHz	I_{out}	[A]	1.9 [3]	3.1 [3]	5.0 [3]	8.8 [3]
8 kHz	I_{out}	[A]	1.5	2.5	4.0	7.0
16 kHz	I_{out}	[A]	1.1	1.9	3.0	5.3

Data for 60 s overload

Max. output current [1, 4]						
	$I_{max, out}$	[A]	2.8	4.7	7.5	13.1
Reduced output current [1, 4]						
	$I_{red, out}$	[A]	1.40	2.30	3.80	6.60
Overload time [1, 4]						
	t_{ol}	[s]	60.0			
Recovery time [1, 4]						
	t_{re}	[s]	120.0			

Data for 0.5 s overload

Max. short-time output current [1, 4]						
	$I_{max, out}$	[A]	6.0	10.0	16.0	21.0
Reduced output current [1, 4]						
	$I_{red, out}$	[A]	1.40	2.30	3.80	6.60
Overload time [1, 4]						
	t_{ol}	[s]	0.5			
Recovery time [1, 4]						
	t_{re}	[s]	4.5			

[2] 1 - Please refer to the Product key section

[1] 10 - See diagram

[3] Operation only permitted with mains choke or mains filter
[4] Mains filter necessary. Without a mains filter, the indicated values for I_{max} and I_{red} decrease



Rated data for Single Drive

- ► The data is valid for operation at 3/PE AC 400 V or DC 565 V.
- ► Unless otherwise specified, the data refers to the default setting.

- ► Rated data for operation at 3/PE/AC 500 V
  DS_9400_0001
  Available for download at www.lenze.de/dsc

						
Typical motor power						
4-pole asynchronous motor	P	[kW]	0.37	0.75	1.50	3.00
Product key [2]						
Single Drive			E94AS□E0024	E94AS□E0034	E94AS□E0044	E94AS□E0074
DC supply						
	U_{DC}	[V]	DC 260 V -0 % ... 775 V +0 %			
Rated DC-bus current						
	$I_{N, DC}$	[A]	2.6	4.3	6.7	12.1
Power loss						
	P_V	[W]	110	130	160	210
Dimensions						
Height	h	[mm]	350			
Height, including fastening	h	[mm]	481			
Width	b	[mm]	60		90	
Depth	t	[mm]	288			
Mass						
	m	[kg]	4.0		5.3	
Max. cable length						
shielded C1 with external measures	I_{max}	[m]	25			
shielded C2 without external measures	I_{max}	[m]	10			
shielded C2 with external measures	I_{max}	[m]	50		100	

Brake chopper rated data

Rated power, Brake chopper [1]					
	P_N	[kW]	1.3	1.9	2.6
Max. output power, Brake chopper [1]					
	$P_{max, 1}$	[kW]	6.4	11.2	
Running time [1]					
	t_{on}	[s]	1.0		
Recovery time [1]					
	t_{re}	[s]	4.3	4.4	4.2
Min. brake resistance [1]					
	R_{min}	[Ω]	82.0	47.0	

[2] 1 - Please refer to the Product key section

[1] 10 - See diagram



Rated data for Single Drive

- ► The data is valid for operation at 3/PE AC 400 V or DC 565 V.
- ► Unless otherwise specified, the data refers to the default setting.

- ► Rated data for operation at 3/PE/AC 500 V
  DS_9400_0001
  Available for download at www.lenze.de/dsc



Typical motor power					
4-pole asynchronous motor	P	[kW]	5.50	7.50	11.0
Product key [1]					
Single Drive			E94AS□E0134	E94AS□E0174	E94AS□E0244
Mains voltage range					
	U_{AC}	[V]	3/PE AC 180 V-0 % ... 550 V+0 %, 45 Hz-0 % ... 65 Hz+0 %		
Rated mains current					
With mains choke	$I_{N, AC}$	[A]	11.8	15.0	20.5
Without mains choke	$I_{N, AC}$	[A]	16.8	21.0	29.0
Rated output current					
	$I_{N, out}$	[A]	13.0	16.5	23.5
Rated switching frequency					
	f_{ch}	[kHz]	8		
Output current					
2 kHz	I_{out}	[A]	16.3 [3]	20.6 [3]	29.4 [3]
4 kHz	I_{out}	[A]	16.3 [3]	20.6 [3]	29.4 [3]
8 kHz	I_{out}	[A]	13.0	16.5	23.5
16 kHz	I_{out}	[A]	9.8	12.4	17.6

Data for 60 s overload

Max. output current [2, 4]					
	$I_{max, out}$	[A]	24.4	30.9	44.1
Reduced output current [2, 4]					
	$I_{red, out}$	[A]	12.2	15.5	22.1
Overload time [2, 4]					
	t_{ol}	[s]	60.0		
Recovery time [2, 4]					
	t_{re}	[s]	120.0		

Data for 0.5 s overload

Max. short-time output current [2, 4]					
	$I_{max, out}$	[A]	39.0	49.5	58.8
Reduced output current [2, 4]					
	$I_{red, out}$	[A]	12.2	15.5	22.1
Overload time [2, 4]					
	t_{ol}	[s]	0.5		
Recovery time [2, 4]					
	t_{re}	[s]	4.5		

[1] 1 - Please refer to the Product key section

[2] 10 - See diagram

[3] Operation only permitted with mains choke or mains filter

[4] Mains filter necessary. Without a mains filter, the indicated values for I_{max} and I_{red} decrease



Rated data for Single Drive

- ► The data is valid for operation at 3/PE AC 400 V or DC 565 V.
- ► Unless otherwise specified, the data refers to the default setting.

- ► Rated data for operation at 3/PE/AC 500 V
  DS_9400_0001
  Available for download at www.lenze.de/dsc

					
Typical motor power					
4-pole asynchronous motor	P	[kW]	5.50	7.50	11.0
Product key [2]					
Single Drive			E94AS□E0134	E94AS□E0174	E94AS□E0244
DC supply					
	U_{DC}	[V]	DC 260 V -0 % ... 775 V +0 %		
Rated DC-bus current					
	$I_{N, DC}$	[A]	20.6	25.7	35.5
Power loss					
	P_V	[W]	320	380	500
Dimensions					
Height	h	[mm]	350		
Height, including fastening	h	[mm]	481		
Width	b	[mm]	120		
Depth	t	[mm]	288		
Mass					
	m	[kg]	8.1		
Max. cable length					
shielded C1 with external measures	I_{max}	[m]	25		
shielded C2 without external measures	I_{max}	[m]	10		
shielded C2 with external measures	I_{max}	[m]	100		

Brake chopper rated data

Rated power, Brake chopper [1]					
	P_N	[kW]	4.7	6.4	9.3
Max. output power, Brake chopper [1]					
	$P_{max, 1}$	[kW]	19.5	29.2	
Running time [1]					
	t_{on}	[s]	1.0		
Recovery time [1]					
	t_{re}	[s]	4.2	4.3	3.9
Min. brake resistance [1]					
	R_{min}	[Ω]	27.0	18.0	

[2] 1 - Please refer to the Product key section

[1] 10 - See diagram



Rated data for Single Drive

- ► The data is valid for operation at 3/PE AC 400 V or DC 565 V.
- ► Unless otherwise specified, the data refers to the default setting.
- ► Rated data for operation at 3/PE/AC 500 V
  DS_9400_0001
  Available for download at www.lenze.de/dsc



Typical motor power					
4-pole asynchronous motor	P	[kW]	15.0	22.0	30.0
Product key [1]					
Single Drive			E94AS□E0324	E94AS□E0474	E94AS□E0594
Mains voltage range					
	U_{AC}	[V]	3/PE AC 180 V-0 % ... 550 V+0 %, 45 Hz-0 % ... 65 Hz+0 %		
Rated mains current					
With mains choke	$I_{N, AC}$	[A]	29.0	43.0	54.0
Without mains choke	$I_{N, AC}$	[A]	29.0	43.0	54.0
Rated output current					
	$I_{N, out}$	[A]	32.0	47.0	59.0
Rated switching frequency					
	f_{ch}	[kHz]	8	4	
Output current					
2 kHz	I_{out}	[A]	38.4	47.0	59.0
4 kHz	I_{out}	[A]	38.4	47.0	59.0
8 kHz	I_{out}	[A]	32.0	41.0	
16 kHz	I_{out}	[A]	16.8	21.5	

Data for 60 s overload

Max. output current [2]					
	$I_{max, out}$	[A]	57.6	70.5	88.5
Reduced output current [2]					
	$I_{red, out}$	[A]	28.8	35.3	44.3
Overload time [2]					
	t_{ol}	[s]	60.0		
Recovery time [2]					
	t_{re}	[s]	120.0		

Data for 0.5 s overload

Max. short-time output current [2]					
	$I_{max, out}$	[A]	76.8	94.0	118.0
Reduced output current [2]					
	$I_{red, out}$	[A]	28.8	35.3	44.3
Overload time [2]					
	t_{ol}	[s]	0.5		
Recovery time [2]					
	t_{re}	[s]	4.5		

[1] 1 - Please refer to the Product key section

[2] 10 - See diagram



Rated data for Single Drive

- ► The data is valid for operation at 3/PE AC 400 V or DC 565 V.
- ► Unless otherwise specified, the data refers to the default setting.

- ► Rated data for operation at 3/PE/AC 500 V
  DS_9400_0001
  Available for download at www.lenze.de/dsc

					
Typical motor power					
4-pole asynchronous motor	P	[kW]	15.0	22.0	30.0
Product key [2]					
Single Drive			E94AS□E0324	E94AS□E0474	E94AS□E0594
DC supply					
	U_{DC}	[V]	DC 260 V -0 % ... 775 V +0 %		
Rated DC-bus current					
	$I_{N, DC}$	[A]	36.0	53.0	66.0
Power loss					
	P_V	[W]	700	1050	1122
Dimensions					
Height	h	[mm]	556		
Height, including fastening	h	[mm]	606		
Width	b	[mm]	206		
Depth	t	[mm]	294		
Mass					
	m	[kg]	26.5		
Max. cable length					
shielded C1 with external measures	l_{max}	[m]	50		
shielded C2 without external measures	l_{max}	[m]	50		
shielded C2 with external measures	l_{max}	[m]	100		

Brake chopper rated data

Rated power, Brake chopper [1]					
	P_N	[kW]	12.6	18.6	25.3
Max. output power, Brake chopper [1]					
	$P_{max, 1}$	[kW]	29.2	35.0	
Running time [1]					
	t_{on}	[s]	260.0	320.0	430.0
Recovery time [1]					
	t_{re}	[s]	340.0	280.0	170.0
Min. brake resistance [1]					
	R_{min}	[Ω]	18.0	15.0	

[2] 1 - Please refer to the Product key section

[1] 10 - See diagram



Rated data for Single Drive

- ► The data is valid for operation at 3/PE AC 400 V or DC 565 V.
- ► Unless otherwise specified, the data refers to the default setting.

- ► Rated data for operation at 3/PE/AC 500 V
  DS_9400_0001
  Available for download at www.lenze.de/dsc

				
Typical motor power				
4-pole asynchronous motor	P	[kW]	45.0	55.0
Product key [1]				
Single Drive			E94AS□E0864	E94AS□E1044
Mains voltage range				
	U_{AC}	[V]	3/PE AC 180 V-0 % ... 550 V+0 %, 45 Hz-0 % ... 65 Hz+0 %	
Rated mains current				
With mains choke	$I_{N, AC}$	[A]	79.0	95.0
Without mains choke	$I_{N, AC}$	[A]	79.0	95.0
Rated output current				
	$I_{N, out}$	[A]	86.0	104.0
Rated switching frequency				
	f_{ch}	[kHz]	4	
Output current				
2 kHz	I_{out}	[A]	86.0	104.0
4 kHz	I_{out}	[A]	86.0	104.0
8 kHz	I_{out}	[A]	73.0	78.0
16 kHz	I_{out}	[A]	38.3	41.0

Data for 60 s overload

Max. output current [2]				
	$I_{max, out}$	[A]	129.0	156.0
Reduced output current [2]				
	$I_{red, out}$	[A]	64.5	78.0
Overload time [2]				
	t_{ol}	[s]	60.0	
Recovery time [2]				
	t_{re}	[s]	120.0	

Data for 0.5 s overload

Max. short-time output current [2]				
	$I_{max, out}$	[A]	172.0	208.0
Reduced output current [2]				
	$I_{red, out}$	[A]	64.5	78.0
Overload time [2]				
	t_{ol}	[s]	0.5	
Recovery time [2]				
	t_{re}	[s]	4.5	

[1] 1 - Please refer to the Product key section

[2] 10 - See diagram



Rated data for Single Drive

- ► The data is valid for operation at 3/PE AC 400 V or DC 565 V.
- ► Unless otherwise specified, the data refers to the default setting.

- ► Rated data for operation at 3/PE/AC 500 V
  DS_9400_0001
  Available for download at www.lenze.de/dsc

				
Typical motor power				
4-pole asynchronous motor	P	[kW]	45.0	55.0
Product key [2]				
Single Drive			E94AS□E0864	E94AS□E1044
Rated DC-bus current				
	$I_{N, DC}$	[A]	96.8	116.4
Power loss				
	P_V	[W]	1500	1800
Dimensions				
Height	h	[mm]	655	
Height, including fastening	h	[mm]	706	
Width	b	[mm]	266	
Depth	t	[mm]	370	
Mass				
	m	[kg]	42.0	
Max. cable length				
shielded C2 without external measures	l_{max}	[m]	50	
shielded C2 with external measures	l_{max}	[m]	100	

Brake chopper rated data

Rated power, Brake chopper [1]				
	P_N	[kW]	37.9	46.3
Max. output power, Brake chopper [1]				
	$P_{max, 1}$	[kW]	70.1	
Running time [1]				
	t_{on}	[s]	320.0	400.0
Recovery time [1]				
	t_{re}	[s]	280.0	200.0
Min. brake resistance [1]				
	R_{min}	[Ω]	7.5	

[2] 1 - Please refer to the Product key section

[1] 10 - See diagram



Rated data for Single Drive

- ► The data is valid for operation at 3/PE AC 400 V or DC 565 V.
- ► Unless otherwise specified, the data refers to the default setting.
- ► Rated data for operation at 3/PE/AC 500 V
  DS_9400_0001
  Available for download at www.lenze.de/dsc

Typical motor power											
4-pole asynchronous motor	P	[kW]	75.0	85.0 [3]	95.0 [4]	90.0	105 [3]	110 [4]	105	125 [3]	135 [4]
Product key [1]											
Single Drive			E94AS□E1454			E94AS□E1724			E94AS□E2024		
Mains voltage range											
	U_{AC}	[V]	3/PE AC 342 V-0 % ... 550 V+0 %, 48 Hz-0 % ... 65 Hz+0 %								
Rated mains current											
With mains choke	$I_{N, AC}$	[A]	140.0			166.0			195.0		
Without mains choke	$I_{N, AC}$	[A]	140.0			166.0			195.0		
Rated output current											
	$I_{N, out}$	[A]	145.0			172.0			202.0		
Rated switching frequency											
	f_{ch}	[kHz]	4								
Output current											
2 kHz	I_{out}	[A]	145.0	160.0	177.0	172.0	195.0	212.0	202.0	240.0	260.0
4 kHz	I_{out}	[A]	145.0			172.0			202.0		
8 kHz	I_{out}	[A]	102.0			120.0			131.0		
16 kHz	I_{out}	[A]									

Data for 60 s overload

Max. output current [2]											
	$I_{max, out}$	[A]	218.0		195.0	258.0		233.0	303.0		286.0
Reduced output current [2]											
	$I_{red, out}$	[A]	109	145	168	129	180	201	152	226	247
Overload time [2]											
	t_{ol}	[s]	60.0								
Recovery time [2]											
	t_{re}	[s]	120.0								

Data for 10 s overload

Max. short-time output current [2]											
	$I_{max, out}$	[A]	261.0	218.0	195.0	310.0	258.0	233.0	364.0	303.0	286.0
Reduced output current [2]											
	$I_{red, out}$	[A]	109	145	168	129	180	201	152	226	247

[1] 1 - Please refer to the Product key section

[2] 10 - See diagram

[3] This column applies to an ambient temperature of 40 °C and a fixed switching frequency of 2 kHz.

[4] The column is valid at an ambient temperature of 40 degrees Celsius, with a fixed switching frequency of 2 kHz and a max. mains voltage of AC 440 V.



Rated data for Single Drive

- ► The data is valid for operation at 3/PE AC 400 V or DC 565 V.
- ► Unless otherwise specified, the data refers to the default setting.
- ► Rated data for operation at 3/PE/AC 500 V
  DS_9400_0001
  Available for download at www.lenze.de/dsc

Typical motor power											
4-pole asynchronous motor	P	[kW]	75.0	85.0	95.0	90.0	105	110	105	125	135
Product key [2]											
Single Drive			E94AS□E1454			E94AS□E1724			E94AS□E2024		
Rated DC-bus current											
	$I_{N, DC}$	[A]	171.0			203.0			239.0		
Power loss											
	P_V	[W]	2100			2200			2600		
Dimensions											
Height	h	[mm]	897			1166					
Height, including fastening	h	[mm]	930			1199					
Width	b	[mm]	407								
Depth	t	[mm]	427								
Mass											
	m	[kg]	95.0			107.0			109.0		
Max. cable length											
shielded C2 without external measures	I_{max}	[m]	150								
shielded C2 with external measures	I_{max}	[m]	150								

Brake chopper rated data

Rated power, Brake chopper [1]					
	P_N	[kW]	31.5	36.7	45.1
Max. output power, Brake chopper [1]					
	$P_{max, 1}$	[kW]	105.1	122.2	150.2
Running time [1]					
	t_{on}	[s]	60.0		
Recovery time [1]					
	t_{re}	[s]	540.0		
Min. brake resistance [1]					
	R_{min}	[Ω]	5.0	4.3	3.5

[2] 1 - Please refer to the Product key section

[1] 10 - See diagram



Rated data for Single Drive

- ► The data is valid for operation at 3/PE AC 400 V or DC 565 V.
- ► Unless otherwise specified, the data refers to the default setting.
- ► Rated data for operation at 3/PE/AC 500 V
  DS_9400_0001
  Available for download at www.lenze.de/dsc



Typical motor power											
4-pole asynchronous motor	P	[kW]	130	160 [3]	165 [4]	150	190 [3]	210 [4]	190	235 [3]	250 [4]
Product key [1]											
Single Drive			E94AS□E2454			E94AS□E2924			E94AS□E3664		
Mains voltage range											
	U_{AC}	[V]	3/PE AC 342 V-0 % ... 550 V+0 %, 48 Hz-0 % ... 65 Hz+0 %								
Rated mains current											
With mains choke	$I_{N, AC}$	[A]	237.0			280.0			354.0		
Without mains choke	$I_{N, AC}$	[A]	237.0			280.0			354.0		
Rated output current											
	$I_{N, out}$	[A]	315.0			395.0			443.0		
Rated switching frequency											
	f_{ch}	[kHz]	2								
Output current											
2 kHz	I_{out}	[A]	245.0	302.0	315.0	292.0	361.0	395.0	366.0	443.0	480.0
4 kHz	I_{out}	[A]	209.0			250.0			313.0		
8 kHz	I_{out}	[A]	160.0			191.0			240.0		
16 kHz	I_{out}	[A]									

Data for 60 s overload

Max. output current [2]											
	$I_{max, out}$	[A]	368.0		347.0	438.0		435.0	549.0		528.0
Reduced output current [2]											
	$I_{red, out}$	[A]	184	275	299	219	330	375	275	415	456
Overload time [2]											
	t_{ol}	[s]	60.0								
Recovery time [2]											
	t_{re}	[s]	120.0								

Data for 10 s overload

Max. short-time output current [2]											
	$I_{max, out}$	[A]	441.0	368.0	347.0	526.0	438.0	435.0	659.0	549.0	528.0
Reduced output current [2]											
	$I_{red, out}$	[A]	184	275	299	219	330	375	275	415	456

[1] 1 - Please refer to the Product key section

[2] 10 - See diagram

[3] This column applies to an ambient temperature of 40 °C and a fixed switching frequency of 2 kHz.

[4] The column is valid at an ambient temperature of 40 degrees Celsius, with a fixed switching frequency of 2 kHz and a max. mains voltage of AC 440 V.



Rated data for Single Drive

- ► The data is valid for operation at 3/PE AC 400 V or DC 565 V.
- ► Unless otherwise specified, the data refers to the default setting.

- ► Rated data for operation at 3/PE/AC 500 V
  DS_9400_0001
  Available for download at www.lenze.de/dsc



Typical motor power												
4-pole asynchronous motor	P	[kW]	130	160	165	150	190	210	190	235	250
Product key [2]												
Single Drive			E94AS□E2454			E94AS□E2924			E94AS□E3664		
Rated DC-bus current												
	$I_{N, DC}$	[A]	290.0			343.0			434.0		
Power loss												
	P_V	[W]	3300			4100			4900		
Dimensions												
Height	h	[mm]	1546								
Height, including fastening	h	[mm]	1580								
Width	b	[mm]	407								
Depth	t	[mm]	427								
Mass												
	m	[kg]	132.0						161.0		
Max. cable length												
shielded C2 without external measures	l_{max}	[m]	150								
shielded C2 with external measures	l_{max}	[m]	150								

Brake chopper rated data

Rated power, Brake chopper [1]												
	P_N	[kW]	56.3			68.6			90.1		
Max. output power, Brake chopper [1]												
	$P_{max, 1}$	[kW]	187.7			228.5			300.4		
Running time [1]												
	t_{on}	[s]	60.0								
Recovery time [1]												
	t_{re}	[s]	540.0								
Min. brake resistance [1]												
	R_{min}	[Ω]	2.8			2.3			1.8		

[2] 1 - Please refer to the Product key section

[1] 10 - See diagram



Rated data for Single Drive

- ► The data is valid for operation at 3/PE AC 400 V or DC 565 V.
- ► Unless otherwise specified, the data refers to the default setting.

- ► Rated data for operation at 3/PE/AC 500 V
  DS_9400_0001
  Available for download at www.lenze.de/dsc



Typical motor power								
4-pole asynchronous motor	P	[kW]	240	290 [3]	315 [4]	300	320 [3]	345 [4]
Product key [1]								
Single Drive			E94AS□E4604			E94AS□E5724		
Mains voltage range								
	U_{AC}	[V]	3/PE AC 342 V-0 % ... 550 V+0 %, 48 Hz-0 % ... 65 Hz+0 %					
Rated mains current								
With mains choke	$I_{N, AC}$	[A]	444.0			553.0		
Without mains choke	$I_{N, AC}$	[A]	444.0			553.0		
Rated output current								
	$I_{N, out}$	[A]	460.0			572.0		
Rated switching frequency								
	f_{ch}	[kHz]	2					
Output current								
2 kHz	I_{out}	[A]	460.0	550.0	600.0	572.0	610.0	658.0
4 kHz	I_{out}	[A]	386.0			458.0		
8 kHz	I_{out}	[A]	260.0			286.0		
16 kHz	I_{out}	[A]						

Data for 60 s overload

Max. output current [2]								
	$I_{max, out}$	[A]	690.0		660.0	858.0		724.0
Reduced output current [2]								
	$I_{red, out}$	[A]	345	522	570	429	550	625
Overload time [2]								
	t_{ol}	[s]	60.0					
Recovery time [2]								
	t_{re}	[s]	120.0					

Data for 10 s overload

Max. short-time output current [2]								
	$I_{max, out}$	[A]	828.0	690.0	660.0	1030.0	858.0	724.0
Reduced output current [2]								
	$I_{red, out}$	[A]	345	522	570	429	550	625

[1] 1 - Please refer to the Product key section

[2] 10 - See diagram

[3] This column applies to an ambient temperature of 40 °C and a fixed switching frequency of 2 kHz.

[4] The column is valid at an ambient temperature of 40 degrees Celsius, with a fixed switching frequency of 2 kHz and a max. mains voltage of AC 440 V.



Rated data for Single Drive

- ► The data is valid for operation at 3/PE AC 400 V or DC 565 V.
- ► Unless otherwise specified, the data refers to the default setting.

- ► Rated data for operation at 3/PE/AC 500 V
  DS_9400_0001
  Available for download at www.lenze.de/dsc



Typical motor power								
4-pole asynchronous motor	P	[kW]	240	290	315	300	320	345
Product key [2]			E94AS□E4604			E94AS□E5724		
Single Drive								
Rated DC-bus current								
	$I_{N, DC}$	[A]	544.0			677.0		
Power loss								
	P_V	[W]	6200			7200		
Dimensions								
Height	h	[mm]	1559					
Height, including fastening	h	[mm]	1547					
Width	b	[mm]	568					
Depth	t	[mm]	541					
Mass								
	m	[kg]	266.0			278.0		
Max. cable length								
shielded C2 without external measures	I_{max}	[m]	150					
shielded C2 with external measures	I_{max}	[m]	150					

Brake chopper rated data

Rated power, Brake chopper [1]				
	P_N	[kW]	99.0	
Max. output power, Brake chopper [1]				
	$P_{max, 1}$	[kW]	375.0	438.0
Running time [1]				
	t_{on}	[s]	30.0	28.0
Recovery time [1]				
	t_{re}	[s]	270.0	272.0
Min. brake resistance [1]				
	R_{min}	[Ω]	1.4	1.2

[2] 1 - Please refer to the Product key section

[1] 10 - See diagram



Rated data for Single Drive

- ► The data is valid for operation at 3/PE AC 400 V or DC 565 V.
- ► Unless otherwise specified, the data refers to the default setting.

- ► Rated data for operation at 3/PE/AC 500 V
  DS_9400_0001
  Available for download at www.lenze.de/dsc



Typical motor power								
4-pole asynchronous motor	P	[kW]	335	355 [3]	390 [4]	370	385 [3]	420 [4]
Product key [1]								
Single Drive			E94AS□E6354			E94AS□E6954		
Mains voltage range								
	U_{AC}	[V]	3/PE AC 342 V-0 % ... 550 V+0 %, 48 Hz-0 % ... 65 Hz+0 %					
Rated mains current								
With mains choke	$I_{N, AC}$	[A]	614.0			672.0		
Without mains choke	$I_{N, AC}$	[A]	614.0			672.0		
Rated output current								
	$I_{N, out}$	[A]	635.0			800.0		
Rated switching frequency								
	f_{ch}	[kHz]	2					
Output current								
2 kHz	I_{out}	[A]	635.0	678.0	745.0	695.0	730.0	800.0
4 kHz	I_{out}	[A]	508.0			556.0		
8 kHz	I_{out}	[A]	318.0			348.0		
16 kHz	I_{out}	[A]						

Data for 60 s overload

Max. output current [2]								
	$I_{max, out}$	[A]	953.0		820.0	1043.0		880.0
Reduced output current [2]								
	$I_{red, out}$	[A]	476	610	708	521	653	760
Overload time [2]								
	t_{ol}	[s]	60.0					
Recovery time [2]								
	t_{re}	[s]	120.0					

Data for 10 s overload

Max. short-time output current [2]								
	$I_{max, out}$	[A]	1143.0	953.0	820.0	1251.0	1043.0	880.0
Reduced output current [2]								
	$I_{red, out}$	[A]	476	610	708	521	653	760

[1] 1 - Please refer to the Product key section

[2] 10 - See diagram

[3] This column applies to an ambient temperature of 40 °C and a fixed switching frequency of 2 kHz.

[4] The column is valid at an ambient temperature of 40 degrees Celsius, with a fixed switching frequency of 2 kHz and a max. mains voltage of AC 440 V.



Rated data for Single Drive

- ► The data is valid for operation at 3/PE AC 400 V or DC 565 V.
- ► Unless otherwise specified, the data refers to the default setting.

- ► Rated data for operation at 3/PE/AC 500 V
  DS_9400_0001
  Available for download at www.lenze.de/dsc

Typical motor power								
4-pole asynchronous motor	P	[kW]	335	355	390	370	385	420
Product key [2]			E94AS□E6354			E94AS□E6954		
Single Drive								
Rated DC-bus current								
	$I_{N, DC}$	[A]	752.0			823.0		
Power loss								
	P_V	[W]	7700			7800		
Dimensions								
Height	h	[mm]	1559					
Height, including fastening	h	[mm]	1547					
Width	b	[mm]	568					
Depth	t	[mm]	541					
Mass								
	m	[kg]	300.0			321.0		
Max. cable length								
shielded C2 without external measures	l_{max}	[m]	150					
shielded C2 with external measures	l_{max}	[m]	150					

Brake chopper rated data

Rated power, Brake chopper [1]			
	P_N	[kW]	99.0
Max. output power, Brake chopper [1]			
	$P_{max, 1}$	[kW]	478.0
Running time [1]			
	t_{on}	[s]	25.0
Recovery time [1]			
	t_{re}	[s]	275.0
Min. brake resistance [1]			
	R_{min}	[Ω]	1.1

[2] 1 - Please refer to the Product key section

[1] 10 - See diagram



Rated data for Multi Drive

- ► The data is valid for operation at DC 565 V.
- ► Unless otherwise specified, the data refers to the default setting.

					
Typical motor power					
4-pole asynchronous motor	P	[kW]	0.37	0.75	1.50
Product key [1]					
Multi Drive			E94AM□E0024	E94AM□E0034	E94AM□E0044
DC supply					
	U_{DC}	[V]	DC 260 V -0 % ... 775 V +0 %		
Rated output current					
	$I_{N, out}$	[A]	1.5	2.5	4.0
Rated switching frequency					
	f_{ch}	[kHz]	8		
Output current					
2 kHz	I_{out}	[A]	1.9	3.1	5.0
4 kHz	I_{out}	[A]	1.9	3.1	5.0
8 kHz	I_{out}	[A]	1.5	2.5	4.0
16 kHz	I_{out}	[A]	1.1	1.9	3.0

Data for 60 s overload

Max. output current [2]					
	$I_{max, out}$	[A]	2.8	4.7	7.5
Reduced output current [2]					
	$I_{red, out}$	[A]	1.40	2.30	3.80
Overload time [2]					
	t_{ol}	[s]	60.0		
Recovery time [2]					
	t_{re}	[s]	120.0		

Data for 0.5 s overload

Max. short-time output current [2]					
	$I_{max, out}$	[A]	6.0	10.0	16.0
Reduced output current [2]					
	$I_{red, out}$	[A]	1.40	2.30	3.80
Overload time [2]					
	t_{ol}	[s]	0.5		
Recovery time [2]					
	t_{re}	[s]	4.5		

[1] 1 - Please refer to the Product key section

[2] 10 - See diagram



Rated data for Multi Drive

- ► The data is valid for operation at DC 565 V.
- ► Unless otherwise specified, the data refers to the default setting.

					
Typical motor power					
4-pole asynchronous motor	P	[kW]	0.37	0.75	1.50
Product key [1)]					
Multi Drive			E94AM□E0024	E94AM□E0034	E94AM□E0044
Rated DC-bus current					
	$I_{N, DC}$	[A]	2.6	4.3	6.7
Power loss					
	P_V	[W]	100	120	150
Dimensions					
Height	h	[mm]	350		
Height, including fastening	h	[mm]	481		
Width	b	[mm]	60		
Depth	t	[mm]	288		
Mass					
	m	[kg]	4.0		
Max. cable length					
shielded C1 with external measures	I_{max}	[m]	25		
shielded C2 without external measures	I_{max}	[m]	10		
shielded C2 with external measures	I_{max}	[m]	50		100

[1)] 1 - Please refer to the Product key section



Rated data for Multi Drive

- ► The data is valid for operation at DC 565 V.
- ► Unless otherwise specified, the data refers to the default setting.

					
Typical motor power					
4-pole asynchronous motor	P	[kW]	3.00	4.00	5.50
Product key [-1)]					
Multi Drive			E94AM□E0074	E94AM□E0094	E94AM□E0134
DC supply					
	U_{DC}	[V]	DC 260 V -0 % ... 775 V +0 %		
Rated output current					
	$I_{N, out}$	[A]	7.0	9.3	13.0
Rated switching frequency					
	f_{ch}	[kHz]	8		
Output current					
2 kHz	I_{out}	[A]	8.8	11.7	16.3
4 kHz	I_{out}	[A]	8.8	11.7	16.3
8 kHz	I_{out}	[A]	7.0	9.3	13.0
16 kHz	I_{out}	[A]	5.3	7.0	9.8

Data for 60 s overload

Max. output current [2)]					
	$I_{max, out}$	[A]	13.1	17.5	24.4
Reduced output current [2)]					
	$I_{red, out}$	[A]	6.60	8.80	12.2
Overload time [2)]					
	t_{ol}	[s]	60.0		
Recovery time [2)]					
	t_{re}	[s]	120.0		

Data for 0.5 s overload

Max. short-time output current [2)]					
	$I_{max, out}$	[A]	21.0	28.0	39.0
Reduced output current [2)]					
	$I_{red, out}$	[A]	6.60	8.80	12.2
Overload time [2)]					
	t_{ol}	[s]	0.5		
Recovery time [2)]					
	t_{re}	[s]	4.5		

[1)] 1 - Please refer to the Product key section

[2)] 10 - See diagram



Rated data for Multi Drive

- The data is valid for operation at DC 565 V.
- Unless otherwise specified, the data refers to the default setting.

					
Typical motor power					
4-pole asynchronous motor	P	[kW]	3.00	4.00	5.50
Product key [1)]					
Multi Drive			E94AM□E0074	E94AM□E0094	E94AM□E0134
Rated DC-bus current					
	$I_{N, DC}$	[A]	12.1	15.4	20.6
Power loss					
	P_V	[W]	190	230	280
Dimensions					
Height	h	[mm]	350		
Height, including fastening	h	[mm]	481		
Width	b	[mm]	90		120
Depth	t	[mm]	288		
Mass					
	m	[kg]	5.3		8.1
Max. cable length					
shielded C1 with external measures	I_{max}	[m]	25		
shielded C2 without external measures	I_{max}	[m]	10		
shielded C2 with external measures	I_{max}	[m]	100		

[1)] 1 - Please refer to the Product key section



Rated data for Multi Drive

- ► The data is valid for operation at DC 565 V.
- ► Unless otherwise specified, the data refers to the default setting.

					
Typical motor power					
4-pole asynchronous motor	P	[kW]	7.50	11.0	15.0
Product key [1]					
Multi Drive			E94AM□E0174	E94AM□E0244	E94AM□E0324
DC supply					
	U_{DC}	[V]	DC 260 V -0 % ... 775 V +0 %		
Rated output current					
	$I_{N, out}$	[A]	16.5	23.5	32.0
Rated switching frequency					
	f_{ch}	[kHz]	8		
Output current					
2 kHz	I_{out}	[A]	20.6	29.4	40.0
4 kHz	I_{out}	[A]	20.6	29.4	40.0
8 kHz	I_{out}	[A]	16.5	23.5	32.0
16 kHz	I_{out}	[A]	12.4	17.6	24.0

4.4

Data for 60 s overload

Max. output current [2]					
	$I_{max, out}$	[A]	30.9	44.1	60.0
Reduced output current [2]					
	$I_{red, out}$	[A]	15.5	22.1	30.0
Overload time [2]					
	t_{ol}	[s]	60.0		
Recovery time [2]					
	t_{re}	[s]	120.0		

Data for 0.5 s overload

Max. short-time output current [2]					
	$I_{max, out}$	[A]	49.5	70.5	76.8
Reduced output current [2]					
	$I_{red, out}$	[A]	15.5	22.1	30.0
Overload time [2]					
	t_{ol}	[s]	0.5		
Recovery time [2]					
	t_{re}	[s]	4.5		

[1] 1 - Please refer to the Product key section

[2] 10 - See diagram



Rated data for Multi Drive

- ► The data is valid for operation at DC 565 V.
- ► Unless otherwise specified, the data refers to the default setting.

					
Typical motor power					
4-pole asynchronous motor	P	[kW]	7.50	11.0	15.0
Product key [1)]					
Multi Drive			E94AM□E0174	E94AM□E0244	E94AM□E0324
Rated DC-bus current					
	$I_{N, DC}$	[A]	25.7	35.5	48.0
Power loss					
	P_V	[W]	320	420	490
Dimensions					
Height	h	[mm]	350		
Height, including fastening	h	[mm]	481		
Width	b	[mm]	120		
Depth	t	[mm]	288		
Mass					
	m	[kg]	8.1		
Max. cable length					
shielded C1 with external measures	I_{max}	[m]	25		
shielded C2 without external measures	I_{max}	[m]	10		
shielded C2 with external measures	I_{max}	[m]	100		

[1)] 1 - Please refer to the Product key section



Mains connection

- ► The mains fuse and cable cross-section specifications are for a mains connection of 1 x 230V or 3 x 400V.
- ► Class gG/gl fuses or class gRL semiconductor fuses.
- ► The cable cross-sections apply to PVC-insulated copper cables.
- ► Use for installation with UL-approved cables, fuses and brackets.

Operation with mains choke

Typical motor power	Mains voltage	Product key	Circuit breaker	Fuse		Mains connection
4-pole asynchronous motor		Single Drive		EN 60204-1	UL	Cross-section (with mains choke)
P	U_{AC}		I	I	I	q
[kW]	[V]		[A]	[A]	[A]	[mm2]
0.37	3 AC 180 ... 550	E94AS□E0024	C10	10	10	1.5
0.75		E94AS□E0034				
1.50		E94AS□E0044				
3.00		E94AS□E0074	C16	16	15	2.5
5.50		E94AS□E0134	C20	20	20	
7.50		E94AS□E0174	C25	32	25	4.0
11.0		E94AS□E0244	C32		30	10.0



Mains connection

- The mains fuse and cable cross-section specifications are for a mains connection of 1 x 230V or 3 x 400V.
- Class gG/gl fuses or class gRL semiconductor fuses.
- The cable cross-sections apply to PVC-insulated copper cables.
- Use for installation with UL-approved cables, fuses and brackets.

Operation without mains choke

Typical motor power	Mains voltage	Product key	Circuit breaker	Fuse		Mains connection
4-pole asynchronous motor		Single Drive		EN 60204-1	UL	Cross-section (without mains choke)
P	U_{AC}		I	I	I	q
[kW]	[V]		[A]	[A]	[A]	[mm2]
0.37	3 AC 180 ... 550	E94AS□E0024	C10	10	10	1.5
0.75		E94AS□E0034				
1.50		E94AS□E0044				
3.00		E94AS□E0074	C16	16	15	2.5
5.50		E94AS□E0134	C20	20	20	
7.50		E94AS□E0174	C25	32	25	4.0
11.0		E94AS□E0244	C40	50	40	10.0
15.0		E94AS□E0324				
22.0		E94AS□E0474		63	60	16.0
30.0		E94AS□E0594		80	80	25.0
45.0		E94AS□E0864		100	100	50.0
55.0		E94AS□E1044		125	125	70.0
75.0	3 AC 342 ... 550	E94AS□E1454		200	250	
90.0		E94AS□E1724		250	300	95.0
105		E94AS□E2024		315	350	150.0
130		E94AS□E2454		350	200	
150		E94AS□E2924		400	250	185.0
190		E94AS□E3664		500	300	240.0
240		E94AS□E4604		350	350	150.0
300		E94AS□E5724		400	400	185.0
335		E94AS□E6354		450		240.0
370		E94AS□E6954		500		



Motor connection

- ► Keep motor cables as short as possible, as this has a positive effect on the drive behaviour.
- ► With group drives (multiple motors on one inverter), the resulting cable length is the key factor. This can be calculated using the hardware manual.
- ► Electric strength of the motor cable: 1 kV as per VDE 250-1.

Typical motor power	Mains voltage	Product key	Max. cable length		
4-pole asynchronous motor		Single Drive	shielded C1 with external measures	shielded C2 without external measures	shielded C2 with external measures
P	U_{AC}		I_{max}	I_{max}	I_{max}
[kW]	[V]		[m]	[m]	[m]
0.37	3 AC 180 ... 550	E94AS□E0024	25	10	50
0.75		E94AS□E0034			
1.50		E94AS□E0044			100
3.00		E94AS□E0074			
5.50		E94AS□E0134			
7.50		E94AS□E0174			
11.0		E94AS□E0244			
15.0		E94AS□E0324	50	50	
22.0		E94AS□E0474			
30.0		E94AS□E0594			
45.0		E94AS□E0864			
55.0		E94AS□E1044			
75.0	3 AC 342 ... 550	E94AS□E1454	150	150	150
90.0		E94AS□E1724			
105		E94AS□E2024			
130		E94AS□E2454			
150		E94AS□E2924			
190		E94AS□E3664			
240		E94AS□E4604			
300		E94AS□E5724			
335		E94AS□E6354			
370		E94AS□E6954			



Connection diagrams

Wiring example for connecting Servo Drives 9400 HighLine to 3 x 400V

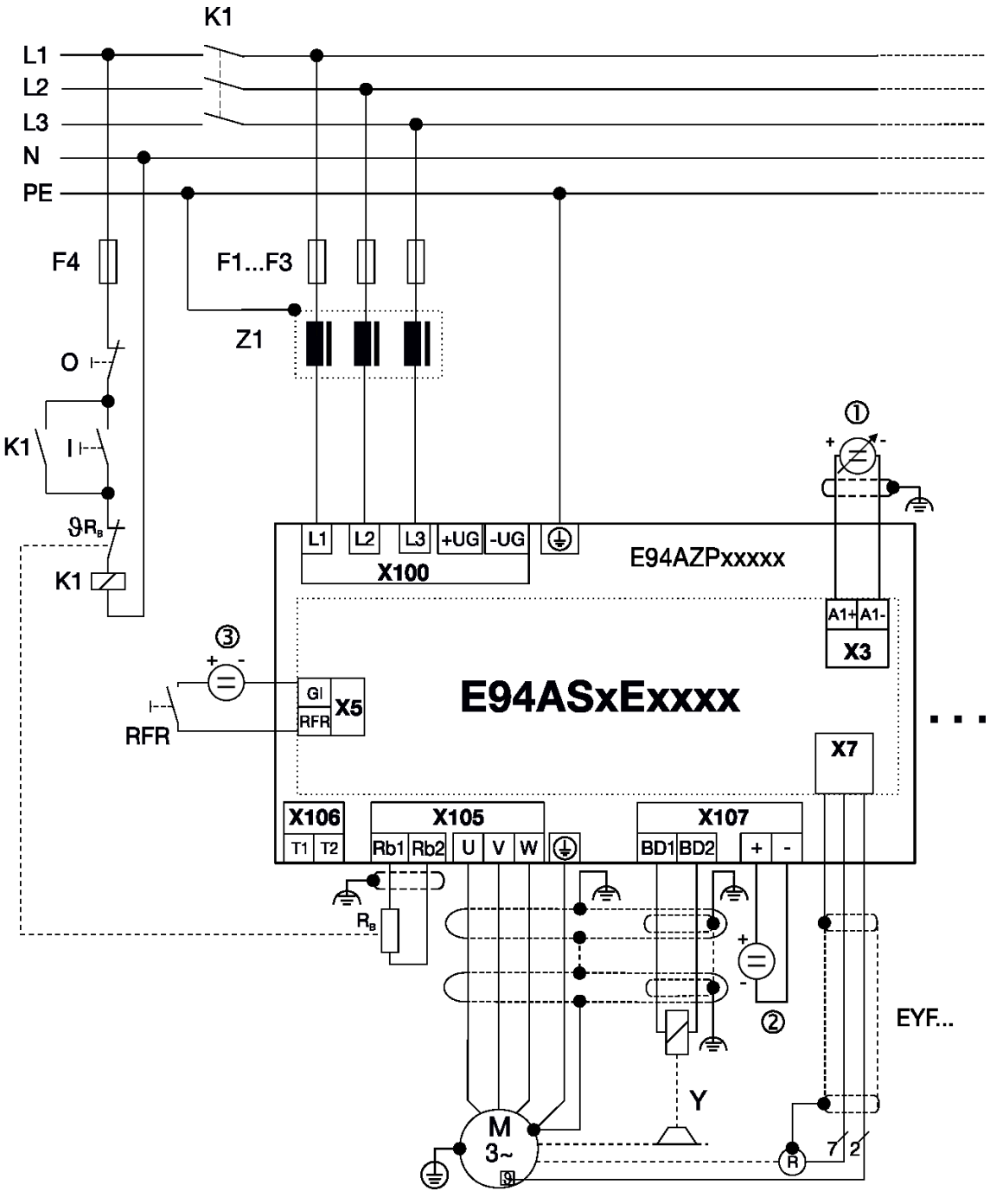



Control connections

Mode	
	Servo Drives 9400 HighLine
Analog inputs	
Number	2
Resolution	11 bits + sign
Value range	+/- 10 V 1 x switchable 20 mA
Analog outputs	
Number	2
Resolution	10 bits + sign
Value range	+/- 10 V max. 2 mA
Digital inputs	
Number	8
Touch-probe-capable	8
Switching level	PLC (IEC 61131-2)
Max. input current	8 mA
Digital outputs	
Number	4
Switching level	PLC (IEC 61131-2)
Max. output current	50 mA
Load capacity	>480 Ω at 24 V
External DC supply	
Rated voltage	24 V in accordance with IEC 61131-2
Voltage range	19.2 ... 28.8 V, max. residual ripple ± 5%
Current	Single Drive: approx. 1.2 A during operation, max. 3 A starting current for 100 ms [1)] Multi Drive: approx. 2.4 A during operation, max. 4 A starting current for 100 ms
Interfaces	
CANopen	Integrated
Extensions	Via slot MXI 2: extension 2 Via slot MXI 1: extension 1
State bus	Integrated
Memory	Slot MMI
Safety engineering	Slot MSI
Drive interface	
Resolver input	Integrated Sub-D, 9-pin
Encoder input	Sub-D, 15-pin Multiple encoder input for: SinCos/TTL incremental encoder, SinCos absolute value encoder single-turn/multi-turn (HIPERFACE® / Endat V2.1) SSI encoder with Stegmann SSI protocol as position encoder or master encoder with minimum cycle time of 1 ms
Motor temperature	Input on the device: PTC evaluation Via feedback: KTY evaluation
Motor brake	Optional, in installation backplane up to 32 A or in axis module from 32 A

[1)] The supply voltage for the control electronics comes from the mains voltage. Alternatively, it can be provided by a 24 V supply that is independent of the mains (available as an option).



Control connections

Connection of analog inputs and outputs

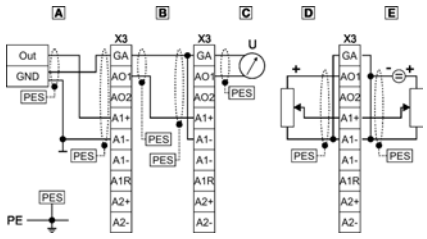

Connection of digital inputs and outputs

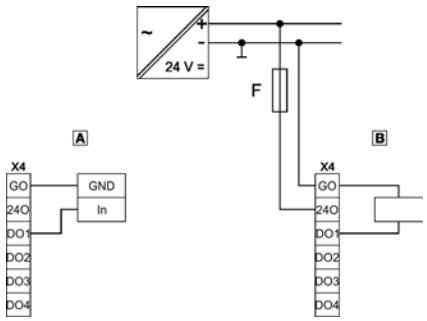

Connection of digital inputs and outputs

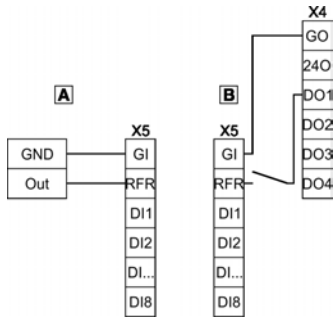

Resolver connection

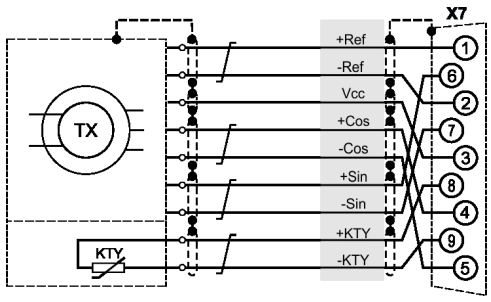

Encoder connection

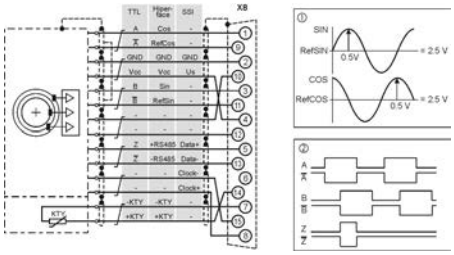



Overview of modules

For adaptation to the machine requirements, up to four different modules can be used to adjust the Servo Drives 9400 and regenerative power supply modules. The following slots are available:

- memory modules:
  (slot MMI) required for operation,
- safety modules:
  (slot MSI) required for operation
- extension modules:
  (slot MXI 1 and/or MXI 2)

The tables below show the modules available for Servo Drive 9400 and the regenerative power supply modules.



Axis module with module slots MXI, MMI and MSI

Memory module

Slot		Mode	Product key	Mode	
		Memory module		HighLine	Regen. module
MMI		Motion control HighLevel MM220	E94AYM22	Standard	Standard
MMI		Motion control TopLevel MM330	E94AYM33	Option	
MMI		Motion control TopLevel MM430	E94AYM43	Option	



Overview of modules

Safety modules

Slot		Mode	Product key	Mode	
		Safety module		HighLine	Regen. module
MSI		SM0	E94AYAA	Standard	Standard
MSI		SM100	E94AYAB	Option	
MSI		SM301	E94AYAE	Option	



Overview of modules

Extension modules

Slot		Mode	Product key	Mode	
		Extension module		HighLine	Regen. module
MXI1 MXI2		Digital frequency	E94AYFLF	Option	

Communication modules

Slot		Mode	Product key	Mode	
		Communication module		HighLine	Regen. module
MXI1 MXI2		CANopen	E94AYCCA	Option	Option
MXI1 MXI2		DeviceNet	E94AYCDN	Option	Option
MXI1 MXI2		EtherCAT	E94AYCET	Option	Option
MXI1 MXI2		EtherNet/IP EtherNet/IP STO	E94AYCEN	Option	Option
MXI1 MXI2		POWERLINK MN/CN	E94AYCEP	Option	
MXI1 MXI2		POWERLINK CN	E94AYCEC	Option	
MXI1 MXI2		PROFIBUS	E94AYCPM	Option	Option
MXI1 MXI2	 	PROFINET	E94AYCER	Option	Option



Overview of modules

Assignment of extension modules and module slots (HighLine)

Two module slots on the Servo Drives 9400 are intended for extensions. The following table lists the possible combinations.

MXI 1	E94AYFLF	E94AYCCA	E94AYCDN	E94AYCET	E94AYCEN	E94AYCEP	E94AYCEC	E94AYCPM	E94AYCER
MXI 2									
E94AYFLF		●	●	●	●	●	●	●	●
E94AYCCA	●			●	●	●	●	●	●
E94AYCDN	●				●	●	●	●	●
E94AYCET	●	●			●				●
E94AYCEN	●	●	●	●		●	●	●	●
E94AYCEP	●	●	●		●			●	●
E94AYCEC	●	●	●		●				
E94AYCPM [1)]	●	●	●		●	●			●
E94AYCER [1)]	●	●	●	●	●	●		●	

[1)] Module slot MXI 1 must be used for PROFIsafe.

Assignment of extension modules and the module slot for the regenerative power supply module

Two module slots on the regenerative power supply modules are intended for extensions. The following table lists the possible combinations.

MXI 1	E94AYCCA	E94AYCDN	E94AYCET	E94AYCEN	E94AYCPM	E94AYCER
MXI 2						
E94AYCCA			●	●	●	●
E94AYCDN				●	●	●
E94AYCET	●	●		●		
E94AYCEN	●	●	●		●	●
E94AYCPM	●	●		●		
E94AYCER	●	●	●	●		



Memory module

Various memory modules are available for the Servo Drives 9400:
- Motion Control HighLevel (MM220)
- Motion Control TopLevel (MM330 and MM430)

With these modules, the functions described below are activated.
The functions can be loaded into the drive using L-force Engineer.
In addition to the different functions of the Runtime software versions, different memory sizes or a real-time clock function (battery-backed) are available, depending on which memory module is used.



MM330 memory module

Mode		Features	Slot	Product key
Memory module				
Motion control HighLevel MM220		• Application and parameter storage • Functional range of HighLevel Motion Control with Servo Drives 9400 HighLine: - Speed actuating drive - Torque actuating drive - Electronic gearbox - Synchronism using mark synchronisation - Table positioning - Expansion/adaptation by means of function block editor In conjunction with regenerative power supply module: - operation of the regenerative power supply module - expansion/adaptation by means of function block editor • Address switch and baud rate setting for onboard system bus CANopen	MMI	E94AYM22
Motion control TopLevel MM330		• Application and parameter storage • Functional range of Motion Control TopLevel with Servo Drives 9400 HighLine: - Speed actuating drive - Torque actuating drive - Electronic gearbox - Synchronism using mark synchronisation - Table positioning - Positioning sequence control (graphical sequencer) -Expansion/adaptation by means of function block editor - Function blocks with cam functionality • Address switch and baud rate setting for onboard system bus CANopen	MMI	E94AYM33



Memory module

Mode		Features	Slot	Product key
Memory module				
Motion control TopLevel MM430		• Application and parameter storage • Functional range of Motion Control TopLevel with Servo Drives 9400 HighLine: - Speed actuating drive - Torque actuating drive - Electronic gearbox - Synchronism using mark synchronisation - Table positioning - Positioning sequence control (graphical sequencer) -Expansion/adaptation by means of function block editor - Function blocks with cam functionality • Address switch and baud rate setting for onboard system bus CANopen • Real-time clock (battery-buffered)	MMI	E94AYM43

Product key		E94AYM22	E94AYM33	E94AYM43
Mode				
Memory module		Motion control HighLevel MM220	Motion control TopLevel MM330	Motion control TopLevel MM430
Storage medium				
Flash memory	[MB]	2.00	4.00	8.00
Additional function				
Real-time clock		No		Yes
System bus addressing switch (CAN)		Yes		



Safety modules

For virtually any application, the provision of extensive safety engineering is one of the most important tasks of the plant constructor. However, this issue can only be solved with the help of complicated wiring. Thanks to the "Drive-based Safety" solution that can be integrated in servo drives 9400, this can be implemented using axis modules. The safety engineering, which can be integrated as an option, has a modular structure.
The range of functions begins with the "safe torque off" function (formerly "safe standstill") and extends as far as integration in safety bus systems. The modular approach of drive-based safety also provides the option for expanding systems in future and, at the same time, ensures flexibility.



SM301 safety module

The following modules are available with safety functions in accordance with IEC 61800-5-2:
- SM0 (necessary for the MSI slot if no safety functions are required)
- SM100
- SM301

Mode		Features	Slot	Product key
Safety module				
SM0		• No safety functions	MSI	E94AYAA
SM100		• 1 safe input for active sensors, 1 monitor (1-channel output) • Control category 4 in acc. with EN 954-1, PLe in acc. with EN ISO 13849-1, SIL3 in acc. with EN IEC 62061 • Safe torque off (STO)		E94AYAB
SM301		• 1 safe output, parameterisable • 4 safe inputs, for active or passive sensors • Safe torque off (STO) • Safe stop 1 (SS1) • Safe stop 2 (SS2) [1)] • Safe operational stop (SOS) [1)] • Safely limited speed (SLS) [1)] • Safe maximum speed (SMS) [1)] • Safe direction (SDI) of motion [1)] • Operation mode selector (OMS) with confirmation (ES) [1)] • Safe speed monitor (SSM) [1)] • Safely limited increment (SLI) [1)] • PROFIsafe safety bus via PROFIBUS DP and PROFINET I/O (optional) • Choice of 1-encoder or 2-encoder evaluation • Control category 3 in acc. with EN 954-1, PLe in acc. with EN ISO 13849-1, SIL3 in acc. with EN IEC 62061		E94AYAE

[1)] For speed-dependent safety functions, the motor-feedback system combinations listed on the following page are available.



Safety modules

Product key			E94AYAA	E94AYAB	E94AYAE
Mode					
Safety module			SM0	SM100	SM301
Certification					
EN 954-1				Category 4	Category 3
EN ISO 13849-1				PLe	PLe
Fail-safe state					
				Safe torque off	Safe torque off
Safe inputs/outputs					
Number of connectable active safety sensors				1	4, choice between active or passive
Number of connectable passive safety sensors					4, choice between active or passive
Monitor (1-channel output)				1	
Safety bus					
PROFIsafe [1]					PROFIBUS DP, PROFINET IO communication module (optional)
Diagnostics					
Status display				2 LEDs	6 LEDs
Rated voltage					
	$U_{N, DC}$	[V]		24.0	24.0

[1] Module slot MXI 1 must be used for PROFIsafe.

Speed-dependent safety functions in connection with the SM301 safety module

For the following speed-dependent safety functions, the motor-feedback system combinations listed in the following table are available:
- Safe stop 1 (SS1)
- Safe operational stop (SOS)
- Safely Limited Speed (SLS)
- Safe Maximum Speed (SMS)
- Safe direction (SDI)
- Operation mode selector (OMS) with confirmation (ES)
- Safe speed monitor (SSM)
- Safely limited increment (SLI).

	Encoder type	Encoder type	Product key		Safe speed monitoring
Synchronous servo motors (MCS, MDXKS)	SinCos absolute value	Single-turn	AS1024-8V-K2		PL d/SIL 2
		Multi-turn	AM1024-8V-K2		
	Resolver		RV03		PL e/SIL 3
				2-encoder concept	up to PL e / SIL 3

	Encoder type	Encoder type	Product key		Safe speed monitoring
Asynchronous servo motors (MCA, MQA)	SinCos incremental	Single-turn	IG1024-5V-V3		PL e/SIL 3
	Resolver		RV03		
				2-encoder concept	up to PL e / SIL 3

Please refer to the servo motors catalogue for details on the concrete assignments of the individual motor frame sizes and the corresponding technical properties.

A "2-encoder concept" is a resolver as motor feedback unit and, at the same time, an absolute value encoder (SinCos), and incremental encoder (TTL), an SSI encoder or bus encoder as position encoder at the machine



Extension module: digital frequency

Some applications require several axes to be operated in synchronism. What was formerly implemented by means of the line shaft, can now be achieved in the Servo Drives 9400 HighLine with the digital frequency extension module.
The extension module provides a digital frequency input and output. The signals of the different axes can thus be looped through and simulated.



Extension module: digital frequency

Mode		Features	Slot	Product key
Communication module				
		• Digital frequency 0 to 500 kHz • Up to three slave drives connectable • Sub-D connection for LFin and LFout	MXI1 MXI2	E94AYFLF

Standards and operating conditions

Product key			
			E94AYFLF
Mode			
Communication module			
Enclosure			
EN 60529			IP20
Vibration resistance			
			Sinusoidal vibration Amplitude/Acceleration Acceleration resistant up to 0.7 g acc. to Germanischer Lloyd 10 Hz ≤ f ≤ 57 Hz: ±0.075 mm amplitude,
Site altitude			
Amsl	H_{max}	[m]	4000
Climatic conditions			
Storage (EN 60721-3-1)			1K3 (temperature: -25 °C ... +60 °C)
Transport (EN 60721-3-2)			2K3 (temperature: -25 °C ... +70 °C)
Operation (EN 60721-3-3)			3K3 (temperature: -10°C ... +55°C)
Insulation voltage to reference earth/PE			
	U_{AC}	[V]	50.0



Extension module: digital frequency

Rated data

Product key			
			E94AYFLF
Mode			
System cables			Type: EYD
Digital frequency			
Input	f	[kHz]	0 to 500 (TTL)
Output	f	[kHz]	0 to 500 (TTL)
Feedback			
Incremental encoder type			TTL encoder
Incremental encoder signal			2 signals of 5 V offset by 90°
Sequence connections			
In parallel			3 drives
In series			For 250 kHz 20 drives For 500 kHz 10 drives
Max. cable length			
between two nodes	I_{max}	[m]	50
Rated voltage			
	$U_{N, DC}$	[V]	24.0



Communication module: CANopen

The Servo Drives 9400 HighLine and the regenerative power supply modules have a CANopen interface on board as a standard feature. It enables the axis modules to communicate with each other and with other system bus components (e.g. I/O systems or HMIs).
If a second CANopen interface is necessary for system networking, the CANopen communication module can be used for this purpose.
CANopen is a communication protocol based on CAN physics. Its specifications are determined by the CiA user group (**C**AN **i**n **A**utomation). Compatibility with the Lenze system bus (CAN) can be established by means of configuration.



Communication module: AS-Interface

Mode		Features	Slot	Product key
Communication module				
CANopen		• CANopen profile DS301, V4.02 Lenze system bus • Automatic baud rate detection • 2 LEDs for communication status display • DIP switch for selecting baud rate and address • Sub-D connection	MXI1 MXI2	E94AYCCA

4.4

Standards and operating conditions

Product key			
			E94AYCCA
Mode			
Communication module			CANopen
Enclosure			
EN 60529			IP20
Vibration resistance			
			Sinusoidal vibration Amplitude/Acceleration Acceleration resistant up to 0.7 g acc. to Germanischer Lloyd 5 Hz ≤ f ≤ 13.2 Hz ± 1 mm amplitude, 13.2 Hz ≤ f ≤ 100 Hz: 10 Hz ≤ f ≤ 57 Hz: ±0.075 mm amplitude,
Site altitude			
Amsl	H_{max}	[m]	4000
Climatic conditions			
Storage (EN 60721-3-1)			1K3 (temperature: -25 °C ... +60 °C)
Transport (EN 60721-3-2)			2K3 (temperature: -25 °C ... +70 °C)
Operation (EN 60721-3-3)			3K3 (temperature: -10°C ... +55°C)
Insulation voltage to reference earth/PE			
	U_{AC}	[V]	50.0



Communication module: CANopen

Rated data

Product key			
			E94AYCCA
Communication			
Medium			DIN ISO 11898
Communication profile			CANopen, DS301 V4.02 Lenze system bus
Baud rate			
	b	[kBit/s]	10 20 50 125 250 500 800 1000
Node			
			Slave Multi-master
Network topology			
			Line with terminating resistors (120 ohm) at both ends
Number of logical process data channels			
			4 (each with 1 - 8 bytes)
Number of logic parameter data channels			
			5
Number of bus nodes			
			127 Without repeaters: 110
Max. cable length			
between two nodes	l_{max}	[m]	100
per bus segment [1)]	l_{max}	[m]	17 for 1000 kbps 40 for 800 kbps 110 for 500 kbps 290 for 250 kbps 630 for 125 kbps 1500 for 50 kbps 3900 for 20 kbps 8000 for 10 kbps
Rated voltage			
	$U_{N, DC}$	[V]	24.0

[1)] Max. bus cable lengths also depend on the number of nodes and the cable cross-section used.



DeviceNet communication module

The American automation specialist Allan Bradley developed the DeviceNet fieldbus based on the CAN controller. This communication profile is published by the ODVA (Open DeviceNet Vendor Association) user organisation. A large number of sensors and actuators are available. Similar to CANopen, a DeviceNet master is used to control the DeviceNet.



DeviceNet communication module

Mode		Features	Slot	Product key
Communication module				
DeviceNet		• "Group 2 Only Server" functionality (slave) • DIP switch for selecting baud rate and address • 1 LED for communication status display • Push-on terminal strip with screw connection, 5-pin	MXI1 MXI2	E94AYCDN

Standards and operating conditions

Product key			
			E94AYCDN
Mode			
Communication module			DeviceNet
Enclosure			
EN 60529			IP20
Vibration resistance			
			Sinusoidal vibration Amplitude/Acceleration Acceleration resistant up to 0.7 g acc. to Germanischer Lloyd 10 Hz ≤ f ≤ 57 Hz: ±0.075 mm amplitude,
Site altitude			
Amsl	H_{max}	[m]	4000
Climatic conditions			
Storage (EN 60721-3-1)			1K3 (temperature: -25 °C ... +60 °C)
Transport (EN 60721-3-2)			2K3 (temperature: -25 °C ... +70 °C)
Operation (EN 60721-3-3)			3K3 (temperature: -10°C ... +55°C)
Insulation voltage to reference earth/PE			
	U_{AC}	[V]	50.0



DeviceNet communication module

Rated data

Product key			
			E94AYCDN
Communication			
Medium			DIN ISO 11898
Communication profile			DeviceNet
Baud rate			
	b	[kBit/s]	125 250 500
Node			
			Slave
Network topology			
			Line with terminating resistors (120 ohm) at both ends
Process data words (PZD)			
16 Bit			32
Number of bus nodes			
			Max. 64
Max. cable length			
per bus segment	I_{max}	[m]	100 for 500 kbps, Thick Cable 250 for 250 kbps, Thick Cable 500 for 125 kbps, Thick Cable 100 for 500 kbps, Thin Cable 100 for 250 kbps, Thin Cable 100 for 125 kbps, Thin Cable
Rated voltage			
	$U_{N, DC}$	[V]	24.0



EtherCAT® communication module

Physically speaking, EtherCAT® is a ring system that uses a one-total-frame protocol, where the device manipulates the data during the cycle. It has two physical variants, the E-bus and Ethernet. E-bus is only suitable for short distances within a device; only the Ethernet version offers the benefits of an Ethernet system.



EtherCAT® communication module

Mode		Features	Slot	Product key
Communication module				
EtherCAT		• CANopen over EtherCAT (CoE) • Distributed clock • 2 RJ45 connections with LEDs for link and activity • 2 LEDs for communication status display • External voltage supply possible	MXI1 MXI2	E94AYCET

4.4

Standards and operating conditions

Product key			
			E94AYCET
Mode			
Communication module			EtherCAT
Enclosure			
EN 60529			IP20
Vibration resistance			
			Sinusoidal vibration Amplitude/Acceleration Acceleration resistant up to 0.7 g acc. to Germanischer Lloyd 10 Hz ≤ f ≤ 57 Hz: ±0.075 mm amplitude,
Site altitude			
Amsl	H_{max}	[m]	4000
Climatic conditions			
Storage (EN 60721-3-1)			1K3 (temperature: -25 °C ... +60 °C)
Transport (EN 60721-3-2)			2K3 (temperature: -25 °C ... +70 °C)
Operation (EN 60721-3-3)			3K3 (temperature: -10°C ... +55°C)
Insulation voltage to reference earth/PE			
	U_{AC}	[V]	50.0



EtherCAT® communication module

Rated data

Product key			
			E94AYCET
Communication			
Medium			CAT5e S/FTP according to ISO/ICE11801 (2002)
Communication profile			CoE (CANopen over EtherCAT)
Baud rate			
	b	[MBit/s]	100
Node			
			Slave
Network topology			
			Line (internal ring)
Number of logical process data channels			
			1
Process data words (PZD)			
16 Bit			1 ... 32
Number of bus nodes			
			Max. 65535
Max. cable length			
between two nodes	l_{max}	[m]	100
Rated voltage			
	$U_{N, DC}$	[V]	24.0



EtherNet/IP communication module

Initially the EtherNet/IP network was reserved for the office, but today this communication system is also often used for system parameterisation. The Servo Drives 9400 can be expanded for this purpose using an EtherNet/IP module.
The EtherNet/IP module can be integrated into general IT infrastructures (e.g. control centres, production data acquisition) and is suitable for remote maintenance applications. It is intended for parameter setting, but not for real-time transmission of process data.



EtherNet/IP communication module

Mode		Features	Slot	Product key
Communication module				
EtherNet/IP EtherNet/IP STO		• Automatic setting of baud rate and transmission mode • 2 RJ45 connections with LEDs for link and activity • Automatic detection of wiring errors and polarity reversal • Integrated 2-port switch • Electrical isolation from the bus • Automatic switching between transmit and receive paths (auto-crossing)	MXI1 MXI2	E94AYCEN

Standards and operating conditions

Product key			
			E94AYCEN
Mode			
Communication module			EtherNet/IP EtherNet/IP STO
Enclosure			
EN 60529			IP20
Vibration resistance			
			Sinusoidal vibration Amplitude/Acceleration Acceleration resistant up to 0.7 g acc. to Germanischer Lloyd 10 Hz ≤ f ≤ 57 Hz: ±0.075 mm amplitude,
Site altitude			
Amsl	H_{max}	[m]	4000
Climatic conditions			
Storage (EN 60721-3-1)			1K3 (temperature: -25 °C ... +60 °C)
Transport (EN 60721-3-2)			2K3 (temperature: -25 °C ... +70 °C)
Operation (EN 60721-3-3)			3K3 (temperature: -10°C ... +55°C)
Insulation voltage to reference earth/PE			
	U_{AC}	[V]	50.0



EtherNet/IP communication module

Rated data

Product key			
			E94AYCEN
Communication			
Medium			Twisted Pair, CAT5e to IEEE802.3
Communication profile			GCI, based on TCP/IP
Baud rate			
	b	[MBit/s]	100
Signalling			
			Link Activity
Max. cable length			
between two nodes	l_{max}	[m]	100
Network topology			
			Star Use of hubs/switches
Transmission			
Mode			Half duplex/full duplex
Rated voltage			
	$U_{N, DC}$	[V]	24.0



POWERLINK communication module

POWERLINK is one of the Ethernet-based bus systems which also uses the tried-and-tested CANopen standards. Each CANopen device profile can also be used directly for EPL without the need to make any adjustments. POWERLINK is suitable for networking between control and inverter, both for pure PLC functionality and for motion control systems. The bus master functionality is performed by the managing node (MN), while the slaves act as controlled nodes (CN).



POWERLINK communication module

Mode		Features	Slot	Product key
Communication module				
POWERLINK MN/CN		• Managing node (MN) or controlled node (CN) • 2 RJ45 connections with LEDs for link and activity • Integrated hub • 2 LEDs for communication status display • External voltage supply possible	MXI1 MXI2	E94AYCEP
POWERLINK CN		• 2 RJ45 connections with LEDs for link and activity • Integrated hub • Controlled node (CN) • 2 LEDs for communication status display • External voltage supply possible	MXI1 MXI2	E94AYCEC

4.4

Standards and operating conditions

Product key			E94AYCEP	E94AYCEC
Mode				
Communication module			POWERLINK MN/CN	POWERLINK CN
Enclosure				
EN 60529			IP20	
Vibration resistance				
			Sinusoidal vibration Amplitude/Acceleration Acceleration resistant up to 0.7 g acc. to Germanischer Lloyd 10 Hz ≤ f ≤ 57 Hz: ±0.075 mm amplitude,	
Site altitude				
Amsl	H_{max}	[m]	4000	
Climatic conditions				
Storage (EN 60721-3-1)			1K3 (temperature: -25 °C ... +60 °C)	
Transport (EN 60721-3-2)			2K3 (temperature: -25 °C ... +70 °C)	
Operation (EN 60721-3-3)			3K3 (temperature: -10°C ... +55°C)	
Insulation voltage to reference earth/PE				
	U_{AC}	[V]	50.0	



POWERLINK communication module

Rated data

Product key				
			E94AYCEP	E94AYCEC
Communication				
Medium			CAT5e S/FTP according to ISO/ICE11801 (2002)	
Communication profile			EPL2.0	
Baud rate				
	b	[MBit/s]	100	
Node				
			Controlled node (CN) Managing node (MN)	Controlled node (CN)
Network topology				
			Star bei Verwendung von externen Hubs Line bei Verwendung der internen Hubs	
Number of logical process data channels				
Process data words (PZD)				
16 Bit				
Number of bus nodes				
			max. 239	
Max. cable length				
between two nodes	l_{max}	[m]	100	
Rated voltage				
	$U_{N, DC}$	[V]	24.0	

Ethernet POWERLINK Hub

Lenze offers an external 8-way hub, supplementing the 2-way hub integrated in the Ethernet POWERLINK interface connections. This infrastructure component corresponds to a class-II repeater as per IEEE802.3u. It automatically detects the network baud rate (10 or 100 Mbps). The hubs can be cascaded via a special uplink port.



Ethernet POWERLINK Hub

Mode		Features	Product key
Communication module			
POWERLINK hub		• DC 24 V • Automatic baud rate detection (10/100 Mbps) • 8-fold hub in industrial design • Cascadable	E94AZCEH



PROFIBUS communication module

One of the most commonly used industrial communication channels is PROFIBUS. The Servo Drives 9400 range offers the corresponding interface module for this communication.
The PROFIBUS module is a slave connection module with the PROFIBUS-DP communication profile. It is used for networking between control and inverter at fast processing speeds. This allows the inverter to be easily and conveniently integrated into the installation's entire network.



PROFIBUS communication module

Mode		Features	Slot	Product key
Communication module				
PROFIBUS		• Electrical isolation from the bus • 2 LEDs for communication status display • Address can be set via DIP switch • Compatibility switch for communication module EMF2133 IB	MXI1 MXI2	E94AYCPM

4.4

Standards and operating conditions

Product key			
			E94AYCPM
Mode			
Communication module			PROFIBUS
Enclosure			
EN 60529			IP20
Vibration resistance			
			Sinusoidal vibration Amplitude/Acceleration Acceleration resistant up to 0.7 g acc. to Germanischer Lloyd 10 Hz ≤ f ≤ 57 Hz: ±0.075 mm amplitude,
Site altitude			
Amsl	H_{max}	[m]	4000
Climatic conditions			
Storage (EN 60721-3-1)			1K3 (temperature: -25 °C ... +60 °C)
Transport (EN 60721-3-2)			2K3 (temperature: -25 °C ... +70 °C)
Operation (EN 60721-3-3)			3K3 (temperature: -10°C ... +55°C)
Insulation voltage to reference earth/PE			
	U_{AC}	[V]	50.0



PROFIBUS communication module

Rated data

Product key			
			E94AYCPM
Communication			
Medium			RS 485, shielded twisted pair
Communication profile			PROFIBUS-DP-V1 PROFIBUS-DP-V0 PROFIsafe
Device profile			Lenze device control
Baud rate			
	b	[kBit/s]	9.6 ... 12 000 (automatic detection)
Node			
			Slave
Network topology			
			Line with repeater: Line or tree without repeater:
Process data words (PZD)			
16 Bit			1 ... 32
DP user data length			
			Optional parameter channel (4 words) + process data words
Number of bus nodes			
			31 slaves + 1 master per bus segment With repeaters: 125
Max. cable length			
per bus segment	l_{max}	[m]	1200 (depending on the baud rate and the cable type used)
Rated voltage			
	$U_{N, DC}$	[V]	24.0



PROFINET communication module

The Ethernet-based PROFINET bus system, the successor to PROFIBUS, is often used. There are currently various versions of PROFINET available, which differ with regard to deterministics and thereby also possible cycle times. The most commonly used system is the RT version of PROFINET I/O, which is suitable for networking between control and inverter, although not for motion control applications.



PROFINET communication module

Mode		Features	Slot	Product key
Communication module				
PROFINET		• 2 RJ45 connections with LEDs for link and activity • Integrated 2-port switch • PROFINET I/O device • Soft Real Time (RT) • 2 LEDs for communication status display • External voltage supply possible	MXI1 MXI2	E94AYCER

Standards and operating conditions

Product key			
			E94AYCER
Mode			
Communication module			PROFINET
Enclosure			
EN 60529			IP20
Vibration resistance			
			Sinusoidal vibration Amplitude/Acceleration Acceleration resistant up to 0.7 g acc. to Germanischer Lloyd 10 Hz ≤ f ≤ 57 Hz: ±0.075 mm amplitude,
Site altitude			
Amsl	H_{max}	[m]	4000
Climatic conditions			
Storage (EN 60721-3-1)			1K3 (temperature: -25 °C ... +60 °C)
Transport (EN 60721-3-2)			2K3 (temperature: -25 °C ... +70 °C)
Operation (EN 60721-3-3)			3K3 (temperature: -10°C ... +55°C)
Insulation voltage to reference earth/PE			
	U_{AC}	[V]	50.0



PROFINET communication module

Rated data

Product key			
			E94AYCER
Communication			
Medium			CAT5e S/FTP according to ISO/ICE11801 (2002)
Communication profile			PROFINET I/O (RT) PROFIsafe in combination with SM301
Baud rate			
	b	[kBit/s]	100
Node			
			PROFINET I/O device
Network topology			
			Star Use of switches
Process data words (PZD)			
16 Bit			1 ... 32
Max. cable length			
between two nodes	l_{max}	[m]	100
Rated voltage			
	$U_{N, DC}$	[V]	24.0



Installation backplane

Up to a rated current of 23.5 A, the Servo Drives 9400 consist of an axis module and an installation backplane. The backplane can initially be mounted in the control cabinet without the axis module. This mechanical structure is also used for power supply modules up to a rated power of 17.5 kW and for regenerative power supply modules for a supply power of up to 27 kW, which simplifies installation. This also offers additional advantages in terms of reduced spare part inventories and time savings in the event of drive replacements. Further features of the installation backplane:

- A brake module for a 24 V DC, 2.5 A brake can be installed as an option
- Shields for power and control cables can be connected

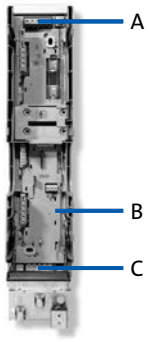

Installation backplane for Single Drive:

A: mains connection
B: brake module (optional)
C: motor connection

Assignment of Single Drive axes and backplanes

Typical motor power	Mains voltage	Product key		Mode
4-pole asynchronous motor		Single Drive	Installation backplane	Installation backplane
P	U_{AC}			
[kW]	[V]			
0.37	3 AC 180 ... 550	E94AS□E0024	E94AZPS0034N	Without brake module
			E94AZPS0034H□0051	With brake module
0.75		E94AS□E0034	E94AZPS0034N	Without brake module
			E94AZPS0034H□0051	With brake module
1.50		E94AS□E0044	E94AZPS0074N	Without brake module
			E94AZPS0074H□0051	With brake module
3.00		E94AS□E0074	E94AZPS0074N	Without brake module
			E94AZPS0074H□0051	With brake module
5.50		E94AS□E0134	E94AZPS0244N	Without brake module
			E94AZPS0244H□0051	With brake module
7.50		E94AS□E0174	E94AZPS0244N	Without brake module
			E94AZPS0244H□0051	With brake module
11.0		E94AS□E0244	E94AZPS0244N	Without brake module
			E94AZPS0244H□0051	With brake module

DC busbar set for Single Drive installation backplane

Running the Single Drive axis module in a DC-bus connection (multi-axis application) requires retrofitting the DC busbar system and using DC fuses.
Mechanical coupling is possible with the following components:

- Power supply module
- DC input module
- Single Drive axis modules
- Multi Drive axis modules

For retrofitting the DC busbar system and the DC fuse have to be installed in the axis module's installation backplane, which is provided with the appropriate fixtures.
The DC fuse required is part of the DC busbar set. Spare fuses are not contained in the scope of supply.

Product key		
Installation backplane	DC busbar mounting set	DC fuses
E94AZPS0034N	E94AZJA003	EFSAR0016ARHN
E94AZPS0034H□0051		
E94AZPS0074N	E94AZJA007	EFSAR0040ARHN
E94AZPS0074H□0051		
E94AZPS0244N	E94AZJA024	EFSAR0100ARZN
E94AZPS0244H□0051		



Installation backplane

Assignment of Multi Drive axes and backplanes

Typical motor power	Mains voltage	Product key		Mode
4-pole asynchronous motor		Multi Drive	Installation backplane	
P	U_{AC}			
[kW]	[V]			
0.37	3 AC 180 ... 550	E94AM□E0024	E94AZPM0044N	Without brake module
			E94AZPM0044H□0051	With brake module
0.75		E94AM□E0034	E94AZPM0044N	Without brake module
			E94AZPM0044H□0051	With brake module
1.50		E94AM□E0044	E94AZPM0044N	Without brake module
			E94AZPM0044H□0051	With brake module
3.00		E94AM□E0074	E94AZPM0094N	Without brake module
			E94AZPM0094H□0051	With brake module
4.00		E94AM□E0094	E94AZPM0094N	Without brake module
			E94AZPM0094H□0051	With brake module
5.50		E94AM□E0134	E94AZPM0244N	Without brake module
			E94AZPM0244H□0051	With brake module
7.50		E94AM□E0174	E94AZPM0244N	Without brake module
			E94AZPM0244H□0051	With brake module
11.0		E94AM□E0244	E94AZPM0244N	Without brake module
			E94AZPM0244H□0051	With brake module
15.0		E94AM□E0324	E94AZPM0324N	Without brake module
			E94AZPM0324H□0051	With brake module

Assignment: power supply modules /regenerative power supply modules and mounting backplane

Rated power	Mains voltage	Product key		
With mains filter/mains choke		Power supply module	Supply- / regenerative module	Installation backplane
P_N	U_{AC}			
[kW]	[V]			
4.90	3 AC 180 ... 550	E94APNE0104		E94AZPP0104
17.5		E94APNE0364		E94AZPP0364
15.0			E94ARNE0134	
27.0			E94ARNE0244	

Replacement DC fuses for Multi Drive installation backplane

If you need to replace the DC fuse in the Multi Drive installation backplane, the available types are listed in the table below.

Product key	
Installation backplane	DC fuses
E94AZPM0044N	EFSAR0016ARHN
E94AZPM0044H□0051	
E94AZPM0094N	EFSAR0040ARHN
E94AZPM0094H□0051	
E94AZPM0244N	EFSAR0100ARZN
E94AZPM0244H□0051	
E94AZPM0324N	
E94AZPM0324H□0051	



Brake modules

Internal activation

An intelligent motor brake logic system is included as standard in the axis modules' device software in the form of a function block.
The brake modules are available in numerous designs.
The optionally integrable brake modules enable a DC 24 V, DC 180 V or DC 205 V brake to be easily connected and this logic to be used.

- For axis modules up to 23.5 A, the brake module is integrated into the installation backplane.
- For axis modules above 32 A, the brake module is integrated into the axis modules.



Brake module, can be integrated into installation backplane

Mode		Features	Product key
Brake module			
24 V DC/0.3 - 2.5 A		• 24 V DC external supply voltage • Monitoring of power supply and brake cable for open circuit and short circuit • Polarity reversal protection for supply voltage • Can be integrated into the installation backplanes, up to 32 A	E94AZHX0051
24 V DC/1.0 - 5.0 A		• 24 V DC external supply voltage • Monitoring of power supply and brake cable for open circuit and short circuit • Polarity reversal protection for supply voltage • Can be integrated into the axis modules, from 32 A	E94AZHY0101
180 V DC/0.1 - 0.61 A		• 400 V AC external supply voltage • Monitoring of power supply and brake cable for open circuit and short circuit • Polarity reversal protection for supply voltage • Can be integrated into the axis modules, from 32 A	E94AZHY0026
205 V DC/0.1 - 0.75 A		• External supply voltage 230 V AC • Monitoring of power supply and brake cable for open circuit and short circuit • Polarity reversal protection for supply voltage • Can be integrated into the axis modules, from 32 A	E94AZHY0025

External activation

Due to their functional principle, the motor brake in Single Drives cannot be released if there is no mains or DC-bus voltage. Brake modules which can be activated externally are therefore provided for a 24V brake.

Mode	Features	Product key
Brake module		
24 V DC/0.3 - 2.5 A	• 24 V DC external supply voltage • Monitoring of power supply and brake cable for open circuit and short circuit • Polarity reversal protection for supply voltage • Can be integrated into the installation backplanes, up to 32 A	E94AZHA0051
24 V DC/1.0 - 5.0 A	• 24 V DC external supply voltage • Monitoring of power supply and brake cable for open circuit and short circuit • Polarity reversal protection for supply voltage • Can be integrated into the axis modules, from 32 A	E94AZHB0101



Brake modules

External brake modules

The external brake modules are provided for DIN rail installation and can be used if axis modules up to 23.5 A require brake voltages of 180 V DC and 205 V DC.

Mode		Features	Product key
Brake module			
180 V DC/0.1 - 0.75 A		• 400 V AC external supply voltage • Monitoring of power supply and brake cable for open circuit and short circuit • Polarity reversal protection for supply voltage • Preconfigured for DIN rail mounting	E94AZHN0026
205 V DC/0.1 - 0.75 A		• External supply voltage 230 V AC • Monitoring of power supply and brake cable for open circuit and short circuit • Polarity reversal protection for supply voltage • Preconfigured for DIN rail mounting	E94AZHN0025



Brake resistors

The assignment of brake resistors to the Single Drive axis modules is shown in the table below.



Brake resistor 82 ohms

Typical motor power	Mains voltage	Product key		Rated resistance	Rated power	Thermal capacity	Dimensions	Mass
4-pole asynchronous motor		Single Drive	Brake resistor					
P	U_{AC}			R_N	P_N	C_{th}	h x b x t	m
[kW]	[V]			[Ω]	[kW]	[KWs]	[mm]	[kg]
0.37	3 AC 180 ... 550 [1]	E94AS□E0024	ERBP082R200W	82.0	200.0	30.0	320 x 41 x 122	1.0
0.75		E94AS□E0034						
1.50		E94AS□E0044	ERBP047R200W	47.0				
			ERBS047R400W		400.0	60.0	400 x 110 x 105	2.3
			ERBS047R800W		800.0	120	710 x 110 x 105	3.9
3.00		E94AS□E0074	ERBP047R200W		200.0	30.0	320 x 41 x 122	1.0
			ERBS047R400W		400.0	60.0	400 x 110 x 105	2.3
			ERBS047R800W		800.0	120	710 x 110 x 105	3.9
5.50		E94AS□E0134	ERBP027R200W	27.0	200.0	30.0	320 x 41 x 122	1.0
			ERBS027R600W		600.0	90.0	550 x 110 x 105	3.1
			ERBS027R01K2		1200.0	180	1020 x 110 x 105	5.6
7.50		E94AS□E0174	ERBP018R300W	18.0	300.0	30.0	240 x 41 x 122	1.4
			ERBS018R800W		800.0	120	710 x 110 x 105	3.9
			ERBS018R02K8		2800.0	420	1110 x 200 x 105	12.0
11.0		E94AS□E0244	ERBP018R300W		300.0	30.0	240 x 41 x 122	1.4
			ERBS018R01K2		1200.0	180	1020 x 110 x 105	5.6
			ERBS018R02K8		2800.0	420	1110 x 200 x 105	12.0
15.0		E94AS□E0324	ERBS018R800W		800.0	120	710 x 110 x 105	3.9
			ERBS018R01K4		1400.0	210	1110 x 110 x 105	6.2
			ERBG018R04K3		4300.0	645	380 x 426 x 302	13.5
22.0		E94AS□E0474	ERBS015R800W	15.0	800.0	120	710 x 110 x 105	3.9
			ERBS015R02K4		2400.0	420	1020 x 200 x 105	10.0
			ERBG015R06K2		6200.0	883	380 x 526 x 302	17.0
30.0		E94AS□E0594	ERBS015R01K2		1200.0	180	1020 x 110 x 105	5.6
			ERBG015R03K3		3300.0	480	486 x 326 x 302	12.6
			ERBG015R10K0		10000.0	1440	380 x 736 x 302	22.0

[1] For 230 V mains voltage a different brake resistor assignment applies.

Data sheet on brake resistors
DS_9400_0002
Available for download at www.lenze.de/dsc



Brake resistors

The assignment of brake resistors to Single Drive axis modules is shown in the table below.

- Two resistors should be connected in parallel for the following combinations:
  E94AS□E3664 and ERBG035D03K3
  E94AS□E4604 and ERBG028D04K1
  E94AS□E5724 and ERBG023D05K6
  E94AS□E6354 and ERBG023D05K6
  E94AS□E6954 and ERBG023D05K6



3.5 ohm brake resistor

Typical motor power	Mains voltage	Product key		Rated resistance	Rated power	Thermal capacity	Dimensions	Mass
4-pole asynchronous motor		Single Drive	Brake resistor					
P	U_{AC}			R_N	P_N	C_{th}	h x b x t	m
[kW]	[V]			[Ω]	[kW]	[KWs]	[mm]	[kg]
45.0	3 AC 180 ... 550 [1]	E94AS□E0864	ERBG075D01K9	7.5	1900.0	285	486 x 236 x 302	9.5
55.0		E94AS□E1044						
75.0	3 AC 342 ... 550	E94AS□E1454	ERBG005R02K6	5.0	2600.0	390	486 x 326 x 302	12.6
90.0		E94AS□E1724	ERBG043D03K0	4.3	3000.0	450		11.8
105		E94AS□E2024	ERBG035D03K3	3.5	3300.0	495		12.6
130		E94AS□E2454	ERBG028D04K1	2.8	4100.0	615	486 x 426 x 302	12.8
150		E94AS□E2924	ERBG023D05K6	2.3	5600.0	840		15.9
190		E94AS□E3664	ERBG035D03K3	3.5	3300.0	495	486 x 326 x 302	12.6
240		E94AS□E4604	ERBG028D04K1	2.8	4100.0	615	486 x 426 x 302	12.8
300		E94AS□E5724	ERBG023D05K6	2.3	5600.0	840		15.9
335		E94AS□E6354						
370		E94AS□E6954						

[1] For 230 V mains voltage a different brake resistor assignment applies.

Data sheet on brake resistors
DS_9400_0002
Available for download at www.lenze.de/dsc



Mains chokes

A mains choke is an inductive resistor which is connected in the mains cable of the power supply module. The use of a mains choke provides the following advantages:

- **Fewer effects on the mains:**
  The wave form of the mains current is a close approximation to a sine wave.
- **Reduction in the effective mains current:**
  Reduction of mains, cable and fuse loads

Mains chokes can be used without restrictions in conjunction with RFI filters and/or sinusoidal filters.

Please note:
: The use of a mains choke slightly reduces the mains voltage at the input of the inverter - the typical voltage drop across the mains choke at the rated values is around 4%.



Mains choke

Typical motor power	Mains voltage	Product key		Rated current	Dimensions	Mass
4-pole asynchron-ous motor		Single Drive	Mains choke			
P	U_{AC}			I_N	h x b x t	m
[kW]	[V]			[A]	[mm]	[kg]
0.37	3 AC 180 ... 550	E94AS□E0024	EZAELN3002B153	2.00	56 x 77 x 100	0.5
0.75		E94AS□E0034	EZAELN3004B742	4.00	60 x 95 x 114	1.3
1.50		E94AS□E0044	EZAELN3006B492	6.00	69 x 95 x 117	1.5
3.00		E94AS□E0074	EZAELN3010B292	10.0	85 x 120 x 134	2.0
5.50		E94AS□E0134	EZAELN3020B152	20.0	95 x 155 x 162	3.8
7.50		E94AS□E0174	EZAELN3025B122	25.0	110 x 155 x 167	5.8
11.0		E94AS□E0244	EZAELN3035B841	35.0		6.0

► The mains choke is integrated in the Single Drives as of a 32 A rated current.





RFI and mains filters

RFI filters and mains filters enable compliance with the interference voltage categories of the European standard EN 61800-3. There a distinction is drawn between category C1 and category C2.
Category C1 describes the use on public supply networks.
Category C2 describes the use of drives which are intended to be used for industrial purposes in areas also comprising residential areas.



RFI filter, can be mounted beside or below the axis module

RFI filters

RFI filters are capacitive accessory components which can be connected directly upstream of the axis modules. This measure enables compliance with the corresponding conducted noise emission requirements according to EN61800-3.

Typical motor power	Mains voltage	Product key		Rated current	Power loss	Max. cable length		Dimensions	Mass
4-pole asynchronous motor		Single Drive	RFI filter			shielded C1 with external measures	shielded C2 with external measures		
P	U_{AC}			I_N	P_V	l_{max}	l_{max}	h x b x t	m
[kW]	[V]			[A]	[kW]	[m]	[m]	[mm]	[kg]
0.37	3 AC 180 ... 550	E94AS□E0024	E94AZRS0044	3.50	4.00	0	50	522 x 60 x 60	1.8
0.75		E94AS□E0034							
1.50		E94AS□E0044	E94AZRS0104	10.0	8.00			522 x 90 x 60	2.3
3.00		E94AS□E0074							
5.50		E94AS□E0134	E94AZRS0294	29.0	22.0			522 x 120 x 60	3.6
7.50		E94AS□E0174							
11.0		E94AS□E0244							
15.0		E94AS□E0324	E94AZRS0544	54.0	50.0	50	100	670 x 201 x 60	9.0
22.0		E94AS□E0474							
30.0		E94AS□E0594							
45.0		E94AS□E0864	E94AZRS0954	95.0	70.0			780 x 261 x 60	13.0
55.0		E94AS□E1044							

Data sheet on RFI filters
DS_9400_0003
Available for download at www.lenze.com/dsc



RFI and mains filters

Mains filters

A mains filter is a combination of mains choke and RFI filter in a single housing. It reduces line-bound noise emission into the mains, thus ensuring that the line-bound interference voltage is reduced to a permissible level according to EN61800-3.



Mains filter, can be mounted beside or below the axis module

Typical motor power	Mains voltage	Product key		Rated current	Voltage drop	Max. cable length		Dimensions	Mass
4-pole asynchronous motor		Single Drive	Mains filter			shielded C1 with external measures	shielded C2 with external measures		
P	U_{AC}			I_N	U	l_{max}	l_{max}	h x b x t	m
[kW]	[V]			[A]	[V]	[m]	[m]	[mm]	[kg]
0.37	3 AC 180 ... 550	E94AS□E0024	E94AZMS0034	3.20	10.0	25	50	522 x 60 x 60	3.3
0.75		E94AS□E0034							
1.50		E94AS□E0044	E94AZMS0094	9.00			100	522 x 90 x 60	3.9
3.00		E94AS□E0074							
5.50		E94AS□E0134	E94AZMS0184	18.0	7.4			522 x 120 x 60	8.4
7.50		E94AS□E0174							
11.0		E94AS□E0244	E94AZMS0314	31.0	7.3				8.8

Data sheet on mains filters
DS_9400_0004
Available for download at www.lenze.de/dsc



Sinusoidal filters

A sinusoidal filter in the motor cable limits the rate of voltage rise and the capacitive charge/discharge currents that occur during inverter operation. In combination with the specified line filter, the EMC requirements of the limit class C2 for conducted noise emissions are still met, even if longer shielded or even unshielded motor cables are used.

Application range:

- Only use a sinusoidal filter with standard 0 to 550 V asynchronous motors
- Operation only with V/f or V/f^2 characteristic control
- Set the switching frequency permanently to the specified value
- Limit the output frequency of the Servo Drives 9400 to the specified value



Sinusoidal filter

Typical motor power	Mains voltage	Product key				Rated inductance	Switching frequency	Mass
4-pole asynchronous motor		Single Drive	RFI filter	Mains filter	Sinusoidal filter			
P	U_{AC}					L_N	f_{ch}	m
[kW]	[V]					[mH]	[kHz]	[kg]
0.37	3 AC 180 ... 550	E94AS□E0024		E94AZMS0034	EZS3-004A200	11.0	4 8	4.0
0.75		E94AS□E0034						
1.50		E94AS□E0044		E94AZMS0094	EZS3-010A200	5.10		5.5
3.00		E94AS□E0074						
5.50		E94AS□E0134		E94AZMS0184	EZS3-024A200	2.50		14.5
7.50		E94AS□E0174						
11.0		E94AS□E0244		E94AZMS0314	EZS3-037A200	1.70		21.0
15.0		E94AS□E0324	E94AZRS0544		EZS3-048A200	1.20		25.5
22.0		E94AS□E0474			EZS3-061A200	1.00		33.5
30.0		E94AS□E0594			EZS3-072A200	0.95		37.0
45.0		E94AS□E0864	E94AZRS0954		EZS3-115A200	0.70	2 4	66.0
55.0		E94AS□E1044			EZS3-150A200	0.50		69.0

Data sheet on sinusoidal filters
DS_ZB_EZS3_0001
Available for download at www.lenze.de/dsc



Sinusoidal filters

Typical motor power	Mains voltage	Product key		Max. output frequency	Rated inductance	Switching frequency	Mass
4-pole asynchronous motor		Single Drive	Sinusoidal filter				
P	U_{AC}			$f_{max, 2}$	L_N	f_{ch}	m
[kW]	[V]			[Hz]	[mH]	[kHz]	[kg]
75.0	3 AC 342 ... 550	E94AS□E1454	EZS3-180A200 3)		0.40	2 4	95.0
90.0		E94AS□E1724	EZS3-250A200 3)		0.35		107.0
105		E94AS□E2024					109.0
130		E94AS□E2454	EZS3-350A200 3)		0.21		132.0
150		E94AS□E2924					
190		E94AS□E3664	EZS3-480A200 3)		0.14		161.0
240		E94AS□E4604 1)	EZS3-350A200 3)		0.21		266.0
300		E94AS□E5724 1)	EZS3-480A200 3)		0.14		278.0
335		E94AS□E6354 1)					300.0
370		E94AS□E6954 2)	EZS3-350A200 3)		0.21		321.0

1) Two sinusoidal filters must be connected in parallel
2) Three sinusoidal filters must be connected in parallel
3) If the parameters for devices over 75 kW/145 A are set for operation with "increased rated output current" (code C01199), different assignments may be necessary.

Data sheet on sinusoidal filters
DS_ZB_EZS3_0001
Available for download at www.lenze.de/dsc



Rated data for power supply modules

► The data is valid for operation at 3/PE AC 400 V.

						
Product key						
Power supply module			E94APNE0104	E94APNE0364	E94APNE1004	E94APNE2454
Rated power						
With mains filter/mains choke	P_N	[kW]	4.90	17.5	48.6	119
Without mains filter/mains choke	P_N	[kW]	3.60	13.0	36.2	88.6
Mains voltage range						
	U_{AC}	[V]	3/PE AC 180 V-0 % ... 550 V+0 %, 45 Hz-0 % ... 65 Hz+0 %			
Rated mains current						
	$I_{N, AC}$	[A]	8.0	29.0	82.0	200.0
Rated DC-bus current						
	$I_{N, DC}$	[A]	10.0	36.0	100.0	245.0

4.4

Data for 60 s overload

Max. DC-bus current						
	I_{max}	[A]	15.0	54.0	150.0	368.0
Reduced DC-bus current						
	$I_{red, DC}$	[A]	7.5	27.0	75.0	183.5
Overload time						
	t_{ol}	[s]	120.0			
Recovery time						
	t_{re}	[s]	60.0			
Max. output power [1)]						
	$P_{max, 1}$	[kW]	7.4	26.3	72.9	179.0

Data for 0.5 s overload

Max. short-time DC-bus current						
	I_{max}	[A]	40.0	108.0	200.0	368.0
Reduced DC-bus current						
	$I_{red, DC}$	[A]	7.5	27.0	75.0	183.5
Overload time						
	t_{ol}	[s]	0.5			
Recovery time						
	t_{re}	[s]	4.5			
Max. short-time output power [1)]						
	$P_{max, 2}$	[kW]	19.6	52.5	146.0	357.0

[1)] Mains filter required; if no mains filter is installed, the stated values for P_{max} decrease



Rated data for power supply modules

► The data is valid for operation at 3/PE AC 400 V.

						
Product key						
Power supply module			E94APNE0104	E94APNE0364	E94APNE1004	E94APNE2454
Rated power						
With mains filter/mains choke	P_N	[kW]	4.90	17.5	48.6	119
Without mains filter/mains choke	P_N	[kW]	3.60	13.0	36.2	88.6
Rated DC-bus current						
	$I_{N, DC}$	[A]	10.0	36.0	100.0	245.0
Power loss						
	P_V	[W]	55.0	110	230	550
Dimensions						
Height	h	[mm]	350		383	
Height, including fastening	h	[mm]	481		510	
Width	b	[mm]	60	120	210	390
Depth	t	[mm]	288			
Mass						
	m	[kg]	2.6	5.3	13.5	28.5

Brake chopper rated data

Rated power, Brake chopper						
	P_N	[kW]	2.6	8.7	17.0	30.3
Max. output power, Brake chopper						
	$P_{max, 1}$	[kW]	19.5	43.8	105.1	187.7
Running time						
	t_{on}	[s]	1.0			
Recovery time						
	t_{re}	[s]	3.8	2.5	3.1	
Min. brake resistance						
	R_{min}	[Ω]	27.0	12.0	5.0	2.8



Rated data for regenerative power supply modules

- ► The data is valid for operation at 3/PE AC 400 V.
- ► Mains filter required, please refer to the following pages

						
Product key						
Supply- / regenerative module			E94ARNE0134		E94ARNE0244	
Operating mode						
			Feed	Feedback	Feed	Feedback
Rated power						
With mains filter/mains choke	P_N	[kW]	15.0	7.50	27.0	13.5
Mains voltage range						
	U_{AC}	[V]	3/PE AC 180 V-0 % ... 550 V+0 %, 45 Hz-0 % ... 65 Hz+0 %			
Rated mains current						
	$I_{N, AC}$	[A]	26.0	13.0	47.0	23.5
Rated DC-bus current						
	$I_{N, DC}$	[A]	32.0	16.0	57.0	29.0

Data for 60 s overload

Max. DC-bus current						
	I_{max}	[A]	48.0	24.0	86.0	44.0
Reduced DC-bus current						
	$I_{red, DC}$	[A]	20.0	9.8	35.0	18.0
Overload time						
	t_{ol}	[s]	60.0			
Recovery time						
	t_{re}	[s]	120.0			
Max. output power						
	$P_{max, 1}$	[kW]	22.4	11.2	40.5	20.2

Data for 0.5 s overload

Max. short-time DC-bus current						
	I_{max}	[A]	96.0	48.0	171.0	87.0
Reduced DC-bus current						
	$I_{red, DC}$	[A]	20.0	9.8	35.0	18.0
Max. short-time output power						
	$P_{max, 2}$	[kW]	44.9	22.4	81.1	40.5
with brake chopper support	$P_{max, 2}$	[kW]		35.1		59.6



Rated data for regenerative power supply modules

- ► The data is valid for operation at 3/PE AC 400 V.
- ► Mains filter required, please refer to the following pages

						
Product key						
Supply- / regenerative module			E94ARNE0134		E94ARNE0244	
Operating mode						
			Feed	Feedback	Feed	Feedback
Rated power						
With mains filter/mains choke	P_N	[kW]	15.0	7.50	27.0	13.5
Rated DC-bus current						
	$I_{N, DC}$	[A]	32.0	16.0	57.0	29.0
Power loss						
	P_V	[W]	150	110	230	190
Dimensions						
Height	h	[mm]	350			
Height, including fastening	h	[mm]	481			
Width	b	[mm]	120			
Depth	t	[mm]	288			
Mass						
	m	[kg]	6.0			

Brake chopper rated data

Rated power, Brake chopper				
	P_N	[kW]	4.7	9.3
Max. output power, Brake chopper				
	$P_{max, 1}$	[kW]	19.5	29.2
Running time				
	t_{on}	[s]	1.0	
Recovery time				
	t_{re}	[s]	4.2	3.9
Min. brake resistance				
	R_{min}	[Ω]	27.0	18.0



Control connections

Mode	Power supply modules	Regenerative power supply modules
Analog inputs		
Number		2
Resolution		11 bits + sign
Value range		+/- 10 V 1 x switchable 20 mA
Analog outputs		
Number		2
Resolution		10 bits + sign
Value range		+/- 10 V max. 2 mA
Digital inputs		
Number	1 Permanently configured	8
Switching level	PLC (IEC 61131-2)	
Max. input current	8 mA	
Digital outputs		
Number	4 fest konfiguriert	4
Switching level	PLC (IEC 61131-2)	
Max. output current	50 mA per output	
Load capacity	>480 Ω at 24 V	
External DC supply		
Rated voltage	24 V in accordance with IEC 61131-2	
Voltage range	19.2 ... 28.8 V, max. residual ripple ± 5%	
Current	Approx. 1.4 A during operation, max. 4 A starting current for 100 ms	Approx. 1.2 A during operation, max. 3 A starting current for 100 ms [1)]
Interfaces		
CANopen		Integrated
Extensions		Via slot MXI 2: extension 2 Via slot MXI 1: extension 1
State bus		Integrated
Memory		Slot MMI
Safety engineering		Slot MSI
Drive interface		
Resolver input		Integrated (no function)
Mains synchronisation input		Integrated Sub-D, 15-pin

[1)] The supply to the control electronics comes from the mains voltage. Alternatively, it can be provided by a 24 V supply that is independent of the mains (available as an option).



Brake resistors of the regenerative power supply modules

Assignment of brake resistors to the supply and regenerative power supply modules is shown in the tables below.



Brake resistor 27 ohms

Brake resistors for power supply modules

Rated power	Mains voltage	Product key		Rated resistance	Rated power	Thermal capacity	Dimensions	Mass
Without mains filter/mains choke		Power supply module	Brake resistor					
P_N	U_{AC}			R_N	P_N	C_{th}	h x b x t	m
[kW]	[V]			[Ω]	[kW]	[KWs]	[mm]	[kg]
3.60	3 AC 180 ... 550 [1]	E94APNE0104	ERBP027R200W	27.0	200.0	30.0	320 x 41 x 122	1.0
			ERBS027R600W		600.0	90.0	550 x 110 x 105	3.1
			ERBS027R01K2		1200.0	180	1020 x 110 x 105	5.6
13.0		E94APNE0364	ERBG012R01K9	12.0	1900.0	285	486 x 236 x 302	13.0
			ERBG012R05K2		5200.0	750	486 x 426 x 302	28.0
36.2		E94APNE1004	ERBG005R02K6	5.0	2600.0	390	486 x 326 x 302	12.6
88.6		E94APNE2454	ERBG028D04K1	2.8	4100.0	615	486 x 426 x 302	12.8

[1] For 230 V mains voltage a different brake resistor assignment applies.

Brake resistors for regenerative power supply modules

Rated power	Mains voltage	Product key		Rated resistance	Rated power	Thermal capacity	Dimensions	Mass
With mains filter/mains choke		Supply- / regenerative module	Brake resistor					
P_N	U_{AC}			R_N	P_N	C_{th}	h x b x t	m
[kW]	[V]			[Ω]	[kW]	[KWs]	[mm]	[kg]
15.0	3 AC 180 ... 550 [1]	E94ARNE0134	ERBP027R200W	27.0	200.0	30.0	320 x 41 x 122	1.0
			ERBS027R600W		600.0	90.0	550 x 110 x 105	3.1
			ERBS027R01K2		1200.0	180	1020 x 110 x 105	5.6
27.0		E94ARNE0244	ERBP018R300W	18.0	300.0	30.0	240 x 41 x 122	1.4
			ERBS018R01K2		1200.0	180	1020 x 110 x 105	5.6
			ERBS018R02K8		2800.0	420	1110 x 200 x 105	12.0

[2] For 230 V mains voltage a different brake resistor assignment applies.

Data sheet on brake resistors
DS_9400_0002
Available for download at www.lenze.de/dsc



Interference suppression of the regenerative power supply modules

RFI filters and mains filters enable compliance with the interference voltage categories of the European standard EN 61800-3. There a distinction is drawn between category C1 and category C2.
Category C1 describes the use on public supply networks.
Category C2 describes the use of drives which are intended to be used for industrial purposes in areas also comprising residential areas.
For Multi Drives external filters must be used to comply with the EMC Directive.



RFI filter, can be mounted beside the power supply module

RFI filters

RFI filters are primarily capacitive accessory components which can be connected directly upstream from the power supply modules. This measure enables compliance with the corresponding conducted noise emission requirements according to EN 61800-3.

Rated power	Mains voltage	Product key		Rated current	Power loss	Max. cable length	Dimensions	Mass
Without mains filter/mains choke		Power supply module	RFI filter			Reference group C2		
P_N	U_{AC}			I_N	P_V	l_{max}	h x b x t	m
[kW]	[V]			[A]	[kW]	[m]	[mm]	[kg]
3.60	3 AC 180 ... 550	E94APNE0104	E94AZRP0084	8.00	20.0	6 axes of 10 m each	485 x 60 x 261	4.2
13.0		E94APNE0364	E94AZRP0294	29.0	50.0			4.5
36.2		E94APNE1004	E94AZRP0824	82.0	80.0		490 x 209 x 272	18.5
88.6		E94APNE2454	E94AZRP2004	200	150			20.5

Data sheet on RFI filters
DS_9400_0003
Available for download at www.lenze.com/dsc



Interference suppression of the regenerative power supply modules

Mains filters

A mains filter is a combination of mains choke and RFI filter in a single housing. It reduces line-bound noise emission into the mains, thus ensuring that the line-bound interference voltage is reduced to a permissible level according to EN61800-3.



Mains filter, can be mounted beside the power supply modules (right) or the regenerative power supply modules (left)

Mains filters for power supply modules

Rated power	Mains voltage	Product key		Rated current	Voltage drop	Max. cable length	Dimensions	Mass
With mains filter/mains choke		Power supply module	Mains filter			Reference group C2		
P_N	U_{AC}			I_N	U	l_{max}	h x b x t	m
[kW]	[V]			[A]	[V]	[m]	[mm]	[kg]
4.90	3 AC 180 ... 550	E94APNE0104	E94AZMP0084	8.00	10.0	10 axes of 50 m each	485 x 90 x 261	8.6
17.5		E94APNE0364	E94AZMP0294	29.0	7.3		485 x 120 x 261	16.5
48.6		E94APNE1004	E94AZMP0824 [1]	82.0	6.4		490 x 270 x 272	29.0
119		E94APNE2454	E94AZMP2004 [1]	200	6.3		490 x 330 x 272	52.0

[1] External 24 V supply from a safely separated power supply unit (SELV/PELV) required for integrated fan.

Mains filters for regenerative power supply modules

Rated power	Mains voltage	Product key		Rated current	Voltage drop	Max. cable length	Dimensions	Mass
With mains filter/mains choke		Supply- / regenerative module	Mains filter			Reference group C2		
P_N	U_{AC}			I_N	U	l_{max}	h x b x t	m
[kW]	[V]			[A]	[V]	[m]	[mm]	[kg]
15.0	3 AC 180 ... 550	E94ARNE0134	E94AZMR0264SDB [2]	26.0	6.3	6 axes of 10 m each	485 x 149 x 272	25.0
			E94AZMR0264LDB [2]			10 axes of 50 m each		26.0
27.0		E94ARNE0244	E94AZMR0474SDB [2]	47.0	6.2	6 axes of 10 m each	485 x 209 x 272	36.0
			E94AZMR0474LDB [2]			10 axes of 50 m each		37.0

[2] External 24 V supply through safely separated power supply unit (SELV/PELV) required for integrated mains voltage recording.

Data sheet on mains filters
DS_9400_0004
Available for download at www.lenze.de/dsc



DC input module

Via a DC input module, an axis module interconnection can be supplied with power from a central DC source (power supply module, Single Drive axis modules, Multi Drive axis modules). This is required for example if a drive system with a multi-level structure installed in a control cabinet is to be supplied via a central DC power supply unit. The rated current of the DC input module is defined to be 100 A (DC). The DC input module can be connected at the top or bottom, offering great flexibility with regard to integration into the system wiring. This provides an ideal way of connecting multi-row axis modules in particular.



DC input module 100 A

Mode	Product key	Dimensions	Mass
	Input module		
		h x b x t	m
		[mm]	[kg]
DC input module 100 A	E94AZEX100	422 x 60 x 95	0.9

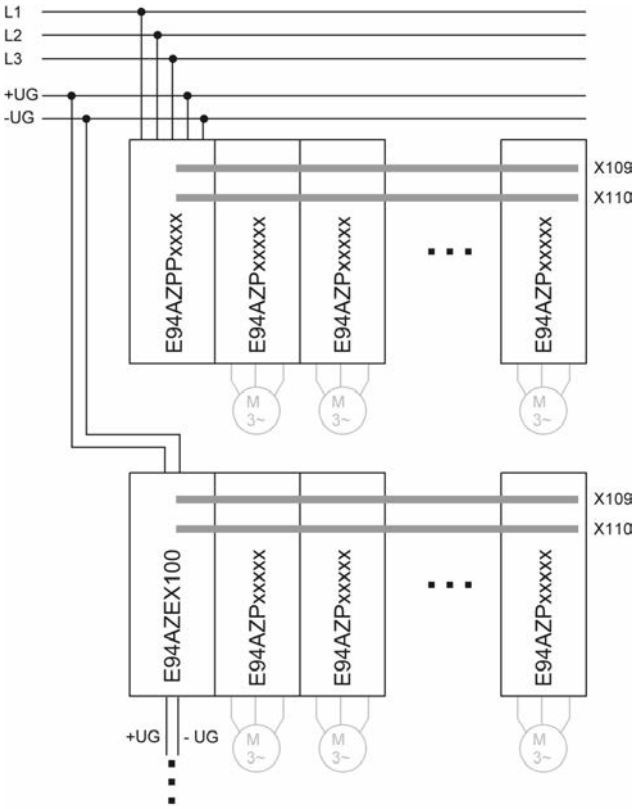

Wiring example for multi-row mounting of axis modules



DC-bus connection

The Servo Drives 9400 HighLine can be operated in a DC-bus connection. The 400 V devices have a direct connection for this.
The components listed here are used to interconnect the individual devices for operation with or without a regenerative power supply module. With a DC-bus connection, energy can be exchanged between the individual devices. This makes particular sense with cyclic operation of multiple devices.
The design of a DC-bus connection requires extremely precise dimensioning of the devices' energy requirements among one another. Lenze Sales is happy to advise you here to ensure the most energy-efficient drive dimensioning. The components listed here form the basis for this.

- Two DC fuses are always required.
- The fuse holders EFH10005 and EFH10004 are single-pole, while the holders EFH20005 and EFH20007 are 2-pole.
- The DC fuses are not UL-approved
- Please consult Lenze Sales to ensure the right dimensioning.

Components for DC-bus connection

Product key	Rated current	Design
DC fuses		
	I_N	
	[A]	
EFSGR0060AYHN	6.00	14x51 without indicator
EFSGR0100AYHN	10.0	
EFSGR0160AYHN	16.0	
EFSGR0200AYHN	20.0	
EFSGR0250AYHN	25.0	
EFSGR0320AYHN	32.0	
EFSGR0400AYHN	40.0	
EFSGR0060AYHK	6.00	14x51 with indicator
EFSGR0100AYHK	10.0	
EFSGR0160AYHK	16.0	
EFSGR0200AYHK	20.0	
EFSGR0250AYHK	25.0	
EFSGR0320AYHK	32.0	
EFSGR0400AYHK	40.0	
EFSGR1000ANVN	100	NH1
EFSGR2000ANVN	200	
EFSGR2500ANVN	250	NH2
EFSGR3500ANVN	350	
EFSGR4000ANVN	400	
EFSGR5000ANVN	500	

Product key	Rated current	Design
DC fuses		
	I_N	
	[A]	
EFSGR0120AYIN	12.0	22x58 without indicator
EFSGR0160AYIN	16.0	
EFSGR0200AYIN	20.0	
EFSGR0250AYIN	25.0	
EFSGR0320AYIN	32.0	
EFSGR0400AYIN	40.0	
EFSGR0500AYIN	50.0	
EFSGR0630AYIN	63.0	
EFSGR0800AYIN	80.0	
EFSGR1000AYIN	100	
EFSGR0120AYIK	12.0	22x58 with indicator
EFSGR0160AYIK	16.0	
EFSGR0200AYIK	20.0	
EFSGR0250AYIK	25.0	
EFSGR0320AYIK	32.0	
EFSGR0400AYIK	40.0	
EFSGR0500AYIK	50.0	
EFSGR0630AYIK	63.0	
EFSGR0800AYIK	80.0	
EFSGR1000AYIK	100	

Mode	Features	Product key
DC busbar	• Busbar system 14 x 51 • DC busbar length 1m, cross-section 25 mm ^{2}	EWZ0036
	• Busbar system 22 x 58 • DC busbar length 1m, cross-section 25 mm ^{2}	EWZ0037
End cap	• End caps for DC busbar (packaging unit 10 pcs)	EWZ0038
Terminal	• Single-pole terminal for internal supply	EWZ0039



DC-bus connection

DC fuses size 14 x 51 mm

Typical motor power	Mains voltage	Product key					
4-pole asynchron-ous motor		Single Drive	Multi Drive	DC fuses			
P	U_{AC}						
[kW]	[V]						
0.37	3 AC 180 ... 550	E94AS□E0024		EFSGR0200AYHN	EFH20005	EFSGR0200AYHK	EFH10005
			E94AM□E0024				
0.75		E94AS□E0034					
			E94AM□E0034				
1.50		E94AS□E0044		EFSGR0320AYHN		EFSGR0320AYHK	
			E94AM□E0044	EFSGR0200AYHN		EFSGR0200AYHK	
3.00		E94AS□E0074		EFSGR0320AYHN		EFSGR0320AYHK	
			E94AM□E0074				
4.00			E94AM□E0094				

DC fuses size 22 x 58 mm

Typical motor power	Mains voltage	Product key					
4-pole asynchron-ous motor		Single Drive	Multi Drive	DC fuses			
P	U_{AC}						
[kW]	[V]						
0.37	3 AC 180 ... 550	E94AS□E0024		EFSGR0200AYIN	EFH20007	EFSGR0200AYIK	EFH10004
			E94AM□E0024				
0.75		E94AS□E0034					
			E94AM□E0034				
1.50		E94AS□E0044		EFSGR0320AYIN		EFSGR0320AYIK	
			E94AM□E0044	EFSGR0200AYIN		EFSGR0200AYIK	
3.00		E94AS□E0074		EFSGR0320AYIN		EFSGR0320AYIK	
			E94AM□E0074				
4.00			E94AM□E0094				
5.50		E94AS□E0134		EFSGR0630AYIN		EFSGR0630AYIK	
			E94AM□E0134				
7.50		E94AS□E0174					
			E94AM□E0174				
11.0		E94AS□E0244		EFSGR1000AYIN		EFSGR1000AYIK	
			E94AM□E0244				
15.0		E94AS□E0324					
			E94AM□E0324				
22.0		E94AS□E0474					



DC-bus connection

NH1 and NH2 DC fuses

Typical motor power	Mains voltage	Product key					
4-pole asynchron-ous motor		Single Drive	Multi Drive	DC fuses			
P	U_{AC}						
[kW]	[V]						
11.0	3 AC 180 ... 550	E94AS□E0244		EFSGR1000ANVN			
15.0		E94AS□E0324					
22.0		E94AS□E0474					
30.0		E94AS□E0594		EFSGR2000ANVN			
45.0		E94AS□E0864					
55.0		E94AS□E1044		EFSGR2500ANVN			
75.0	3 AC 342 ... 550	E94AS□E1454		EFSGR3500ANVN			
90.0		E94AS□E1724		EFSGR4000ANVN			
105		E94AS□E2024					
130		E94AS□E2454		EFSGR5000ANVN			
150		E94AS□E2924		EFSGR3500ANVN			
190		E94AS□E3664		EFSGR4000ANVN			
240		E94AS□E4604		EFSGR5000ANVN			
300		E94AS□E5724		EFSGR4000ANVN			
335		E94AS□E6354		EFSGR5000ANVN			
370		E94AS□E6954					

► Two DC fuses must be connected in parallel on the E94AS□E2924, E94AS□E3664, E94AS□E4604 inverters.
► Three DC fuses must be connected in parallel on the E94AS□E5724, E94AS□E6354, E94AS□E6954 inverters.



24 V power supply unit

Multi-axis applications with Multi Drive axis modules require an external power supply unit to feed the control electronics. Depending on the number of axis modules, power supply units with a rated current of 5, 10 or 20 A can be selected with a voltage supply of 1 x 230 V AC or 3 x 400 V AC.
Single Drive axis modules generally do not require the use of the power supply unit. If, however, separate power supplies are needed for the control electronics and power section in a single-axis application, the same power supply units can be used.



24 V power supply unit

Rated data

Product key			EZV1200-000	EZV2400-000	EZV4800-000	EZV1200-001	EZV2400-001	EZV4800-001
Rated voltage								
	$U_{N, AC}$	[V]	230			400		
Rated mains current								
	$I_{N, AC}$	[A]	0.8	1.2	2.3	0.3	0.6	1.0
Output voltage								
	U_{out}	[V]	DC 22.5 ...28.5					
Rated current								
	I_N	[A]	5.00	10.0	20.0	5.00	10.0	20.0
Dimensions								
Height	h	[mm]	130					
Width	b	[mm]	55	85	157	73	85	160
Depth	t	[mm]	125					
Mass								
	m	[kg]	0.8	1.2	2.5	1.0	1.1	1.9

CAN bus connector

The connector is used to connect the CAN to inverters which are provided with a Sub-D connection for the CAN bus. An integrated CAN terminating resistor can be switched on/off. Internal spring terminals make the use of special mounting tools superfluous. The switch setting can be read from two sides.



CAN bus connector

Mode	Product key
CAN bus connector: Switch	EWZ0046



USB diagnostic adapter

The operation, parameter setting and diagnostics of the Inverter Drives 8400 and the Servo Drives 9400 via the L-force diagnostics is made with the keypad X400 or a PC. The connection of a PC can be made via a USB interface and the USB diagnostic adapter.

For connecting the USB diagnostic adapter with the L-force diagnostics interface (DIAG) tat the inverter, three different connecting cables are separately available in the lengths 2.5 m, 5 m and 10 m. The connection can be established during operation. The engineering tools EASY Starter or Engineer can be used to carry out the operation, parameter setting or diagnostics of the inverters. Both tools have simple intuitive surfaces. This enables a quick and easy commissioning.

Optionally to the USB diagnostic adapter, the PC system bus adapter can be used. For this purpose, a CANopen interface must be available at the inverter.



USB diagnostic adapter incl. connecting cable to the PC

► The engineering tools EASY Starter or Engineer are used for operation, parameter setting and diagnostics of the inverters.

Mode		Features	Product key
USB diagnostic adapter		• Input-side voltage supply via USB connection on PC • Output-side voltage supply via inverter's diagnostic interface • Diagnostic LEDs • Electrical isolation of PC and inverter • Hot-pluggable	E94AZCUS

Connecting cables for USB diagnostic adapter

Mode	Features	Product key
Connecting cable for USB diagnostic adapter	• Length: 2.5 m	EWL0070
	• Length: 5 m	EWL0071
	• Length: 10 m	EWL0072



X400 keypad

As an alternative to the PC, the X400 keypad can be used for local operation, parameter setting or diagnostics.
The X400 keypad plugs into the L-force diagnostics interface (DIAG) on the front of the inverter.



X400 keypad

Mode		Features	Slot	Product key
X400 keypad		• Menu navigation • Graphics display with background lightning for clear presentation of information • 4 navigation keys, 2 context-sensitive keys • Adjustable RUN/STOP function	DIAG	EZAEBK1001

4.4

X400 diagnosis terminal

Mode		Features	Slot	Product key
X400 diagnosis terminal		• X400 keypad in a robust housing • Also suitable for installation in the control cabinet door • incl. 2.5 m cable • IP20 enclosure, IP65 for control cabinet installation on front face	DIAG	EZAEBK2001



Shield connection kits for motor cable

The motor cable shielding can be connected to the shield plates of the installation backplanes or axis modules. To simplify the wiring, additional shield supports can be fitted to the shield plates. The shield support can easily be attached to a fixture on the shield plate and the connection cable just has to be passed through. For larger axis modules the shield support is part of the shield plate.

Mode	Features	Product key
Wire clamp	• Cable diameter: 4...15 mm • Packaging unit: 10 items	EZAMBHXM006/M
	• Cable diameter: 10...20 mm • Packaging unit: 10 items	EZAMBHXM003/M
	• Cable diameter: 15...28 mm • Packaging unit: 10 items	EZAMBHXM004/M

Other accessories

Lenze offers a number of other automation components for the Servo Drives 9400. They do not form part of this product catalogue, but can be found in the Controller-based Automation and PC-based Automation catalogues. More specifically, this relates to the following components:

- Controllers
- Industrial PCs
- Remote maintenance components
- IO systems
- Human Machine Interfaces
- System bus adapters







15593804

Lenze SE
Hans-Lenze-Straße 1
D-31855 Aerzen
Phone: +49 (0)5154 82-0
Telefax: +49 (0)5154 82 28 00

www.Lenze.com