L-force catalogue

Automation systems
Drive solutions

Controls
Inverter
Motors
Gearboxes
Engineering Tools

Motors: Inverter opt. three-phase AC motors MF, IE2 MH three-phase AC motors, IE1 MD three-phase AC motors

Lenze
As easy as that.

Contents of the L-force catalogue

About Lenze		Lenze makes many things easy for you.	
		A matter of principle: the right products for every application.	
		L-force product portfolio	
Automation systems		Controller-based Automation	1.1
		Drive-based automation	1.2
Drive solutions		HighLine tasks	2.1
		StateLine tasks	2.2
		BaseLine tasks	2.3
Controls	Visualisation	Panel PC v800	3.1
		Monitor v200	3.2
	Cabinet Controllers	Controller 3200 C	3.3
		Controller c300	3.4
	Panel Controllers	Controller p500	3.5
		Controller p300	3.6
		I/O System 1000	3.7
Inverter	Decentralised	Inverter Drives 8400 protec	4.1
		Inverter Drives 8400 motec	4.2
	Cabinet	Servo Drives 9400 HighLine	4.3
		Inverter Drives 8400 TopLine	4.4
		Servo-Inverter i700	4.5
		Inverter Drives 8400 HighLine	4.6
		Inverter Drives 8400 StateLine	4.7
		Inverter Drives 8400 BaseLine	4.8
Motors	Servo motors	MCS synchronous servo motors	5.1
		MCM synchronous servo motors	5.2
		MD□KS synchronous servo motors	5.3
		MQA asynchronous servo motors	5.4
		MCA asynchronous servo motors	5.5
	Three-phase AC motors	IE3 three-phase AC motors m500	5.6
		Inverter opt. three-phase AC motors MF	5.7
		IE2 MH three-phase AC motors	5.8
		IE1 MD three-phase AC motors	5.9
		Lenze Smart Motor m300	5.10
		IE3 three-phase AC motors m200	5.11
		IE1/2 three-phase AC motors Basic MD/MH	5.12
Gearboxes	Axial gearboxes	g700-P planetary gearbox	6.1
		MPR/MPG planetary gearboxes	6.2
		g500-H helical gearboxes	6.3
		g500-S shaft-mounted helical gearbox	6.4
	Right-angle gearboxes	g500-B bevel gearbox	6.5
	Motor data	Assignment see above	6.6
Engineering Tools		Navigator	7.1
		Drive Solution Designer	7.2
		Drive Solution Catalogue	7.3
		Engineer	7.4
		PLC Designer	7.5
		VisiWinNET®	7.6
		EASY Starter	7.7

Selected portfolio

Additional portfolio

Lenze makes many things easy for you.

With our motivated and committed approach, we work together with you to create the best possible solution and set your ideas in motion - whether you are looking to optimise an existing machine or develop a new one. We always strive to make things easy and seek perfection therein. This is anchored in our thinking, in our services and in every detail of our products. It's as easy as that!

1

Developing ideas

Are you looking to build the best machine possible and already have some initial ideas? Then get these down on paper together with us, starting with small innovative details and stretching all the way to completely new machines. Working together, we will develop an intelligent and sustainable concept that is perfectly aligned with your specific requirements.

2

Drafting concepts

We see welcome challenges in your machine tasks, supporting you with our comprehensive expertise and providing valuable impetus for your innovations. We take a holistic view of the individual motion and control functions here and draw up consistent, end-to-end drive and automation solutions for you - keeping everything as easy as possible and as extensive as necessary.

3

Implementing solutions

Our easy formula for satisfied customers is to establish an active partnership with fast decision making processes and an individually tailored offer. We have been using this principle to meet the ever more specialised customer requirements in the field of machine engineering for many years.

4

Manufacturing machines

Functional diversity in perfect harmony: as one of the few full-range providers in the market, we can provide you with precisely those products that you actually need for any machine task – no more and no less. Our L-force product portfolio, a consistent platform for implementing drive and automation tasks, is invaluable in this regard.

5

Ensuring productivity

Productivity, reliability and new performance peaks on a daily basis – these are our key success factors for your machine. After delivery, we offer you cleverly devised service concepts to ensure continued safe operation. The primary focus here is on technical support, based on the excellent application expertise of our highly-skilled and knowledgeable after-sales team.

A matter of principle: the right products for every application.

Lenze's extensive L-force product portfolio follows a very simple principle. The functions of our finely scaled products are assigned to the three lines Base-Line, State-Line or High-Line.

But what does this mean for you? It allows you to quickly recognise which products represent the best solution for your own specific requirements.

Powerful products with a major impact:
- Easy handling
- High quality and durability
- Reliable technologies in tune with the latest developments

Lenze products undergo the most stringent testing in our own laboratory. This allows us to ensure that you will receive consistently high quality and a long service life. In addition to this, five logistics centres ensure that the Lenze products you select are available for quick delivery anywhere across the globe. It's as easy as that!

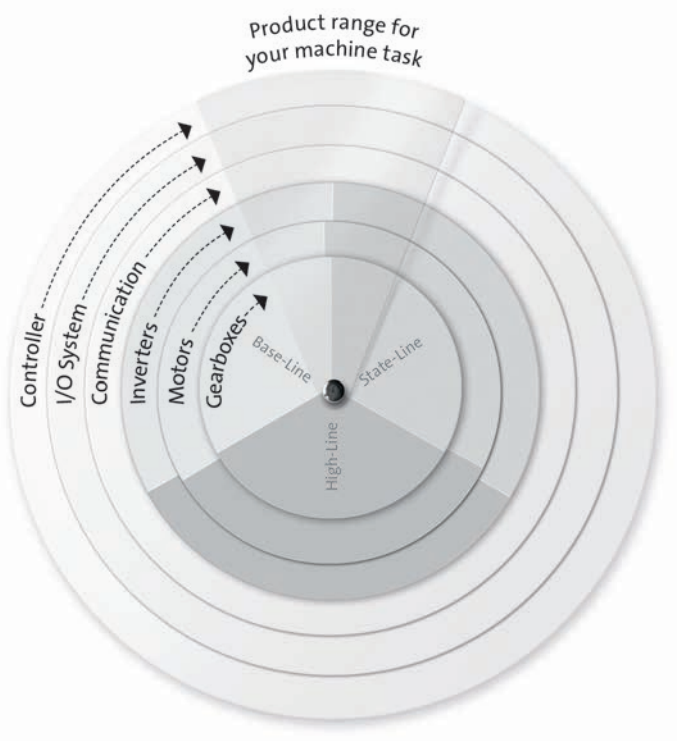

L-force product portfolio

Controls

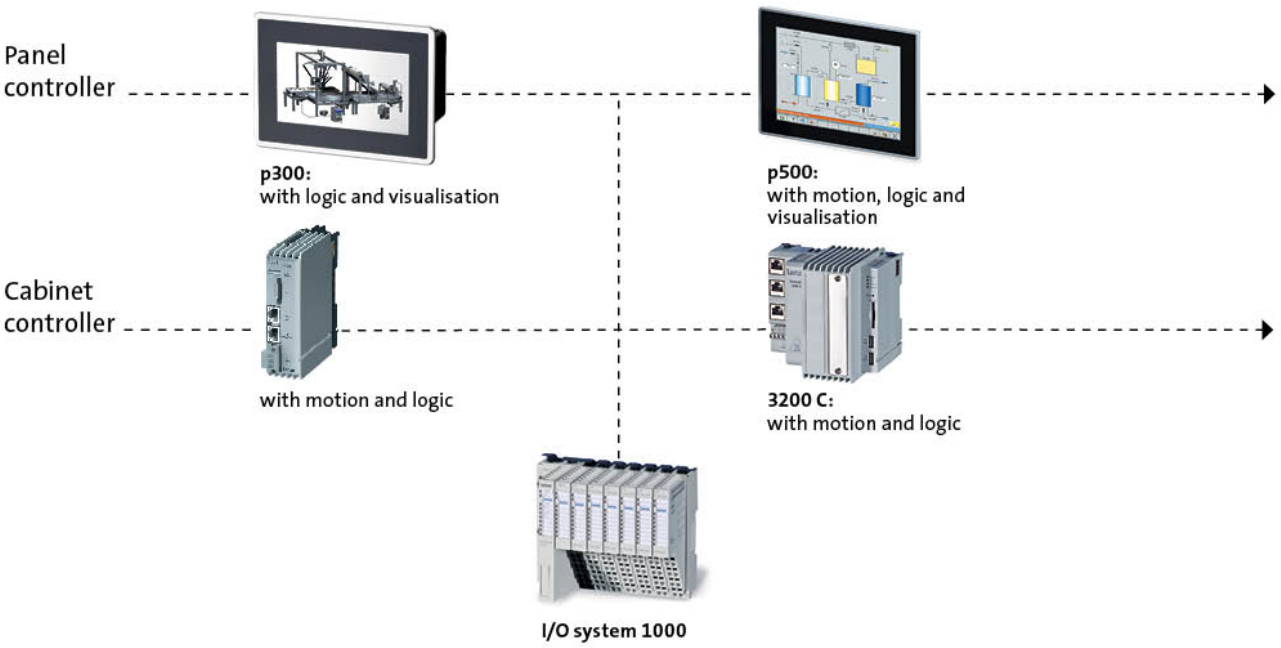

Engineering Tools

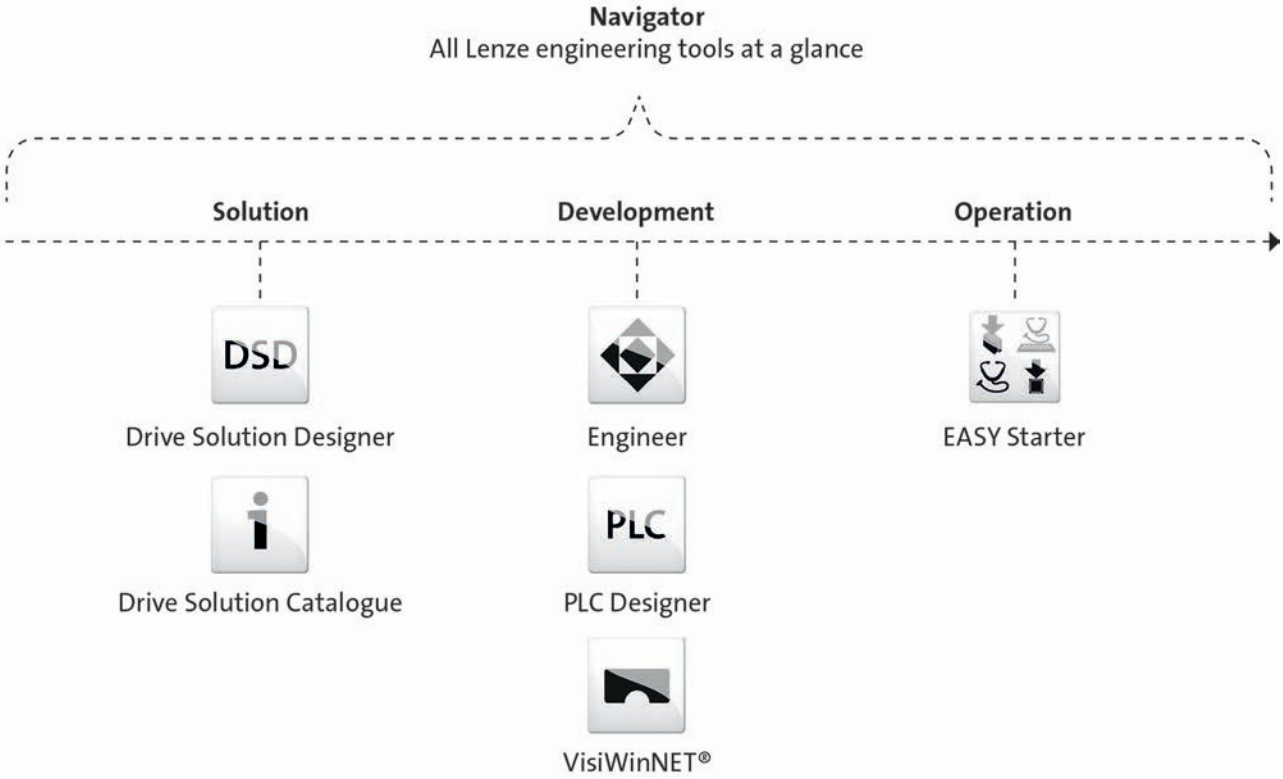

L-force product portfolio

Inverter

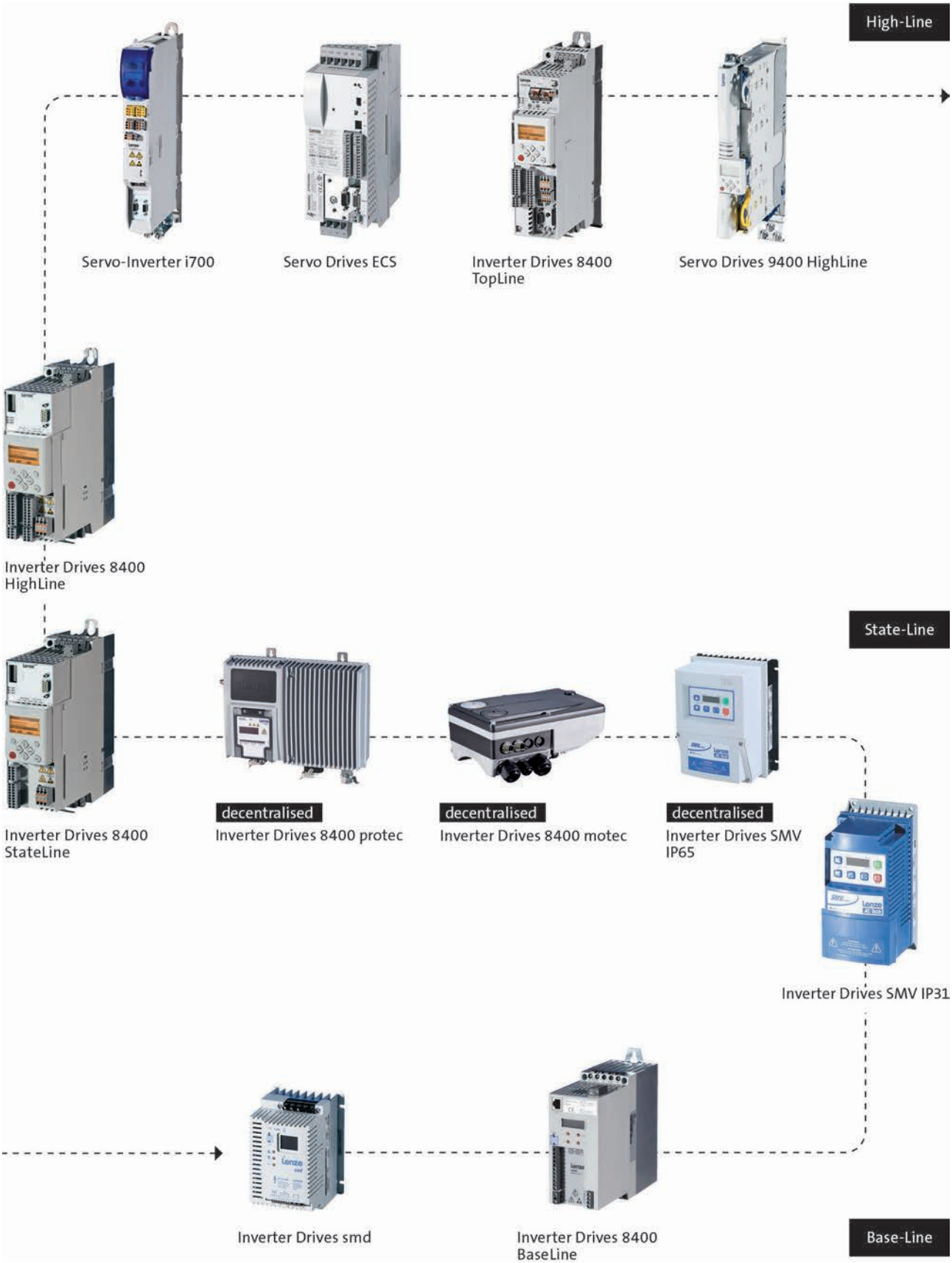

L-force product portfolio

Motors

High-Line

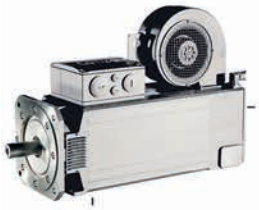

MQA asynchronous servo motors



SDSGS synchronous servo motors



MDXKS synchronous servo motors



Synchronous servo motors MCS



Asynchronous servo motors MCA



Asynchronous servo motors SDSGA

State-Line



MF three-phase AC motors



MH three-phase AC motors



MD three-phase AC motors



Basic MD/MH three-phase AC motors

Base-Line

L-force product portfolio

Gearboxes

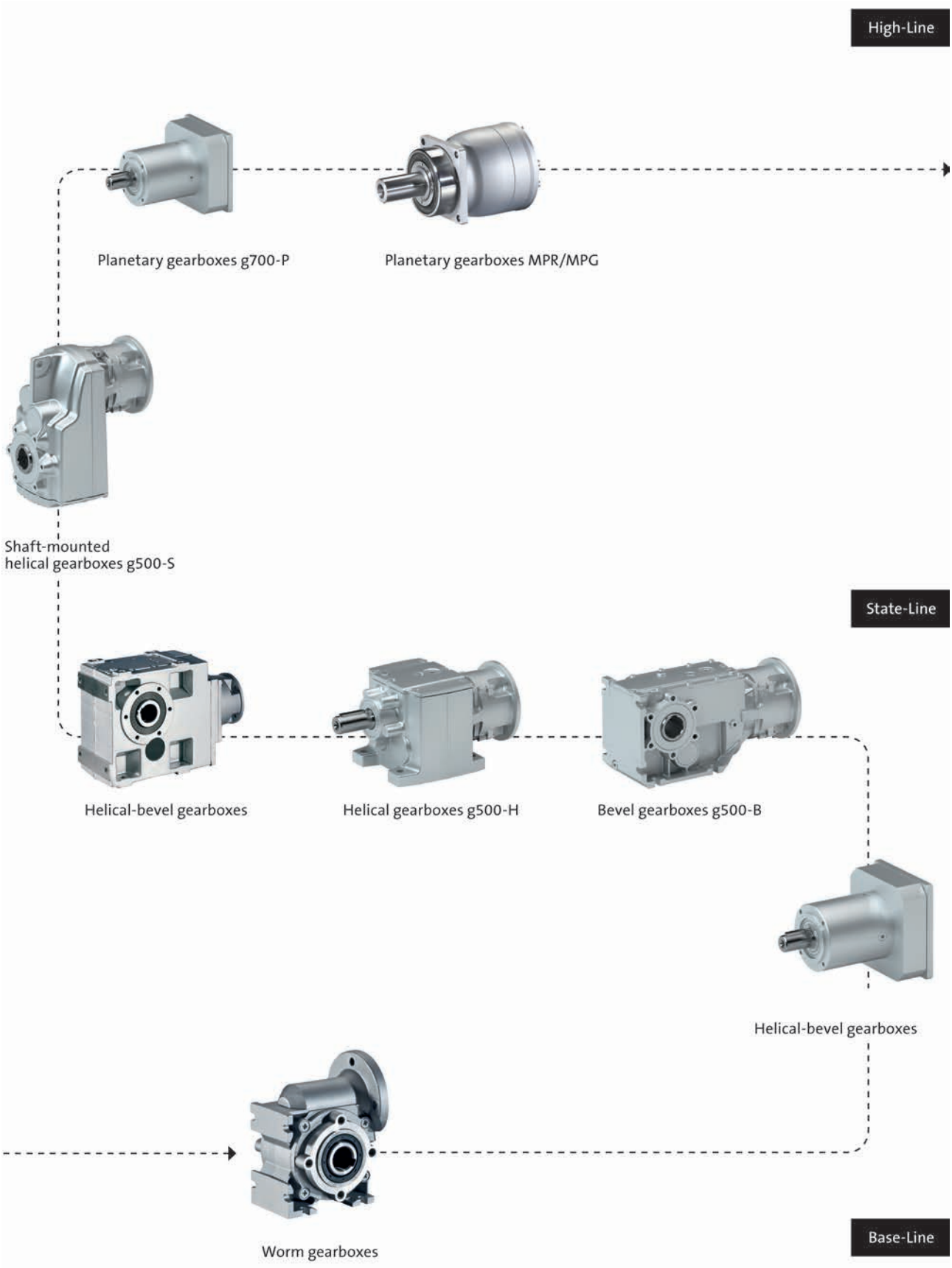

Inverter opt. three-phase AC motors MF

0.55 to 22 kW

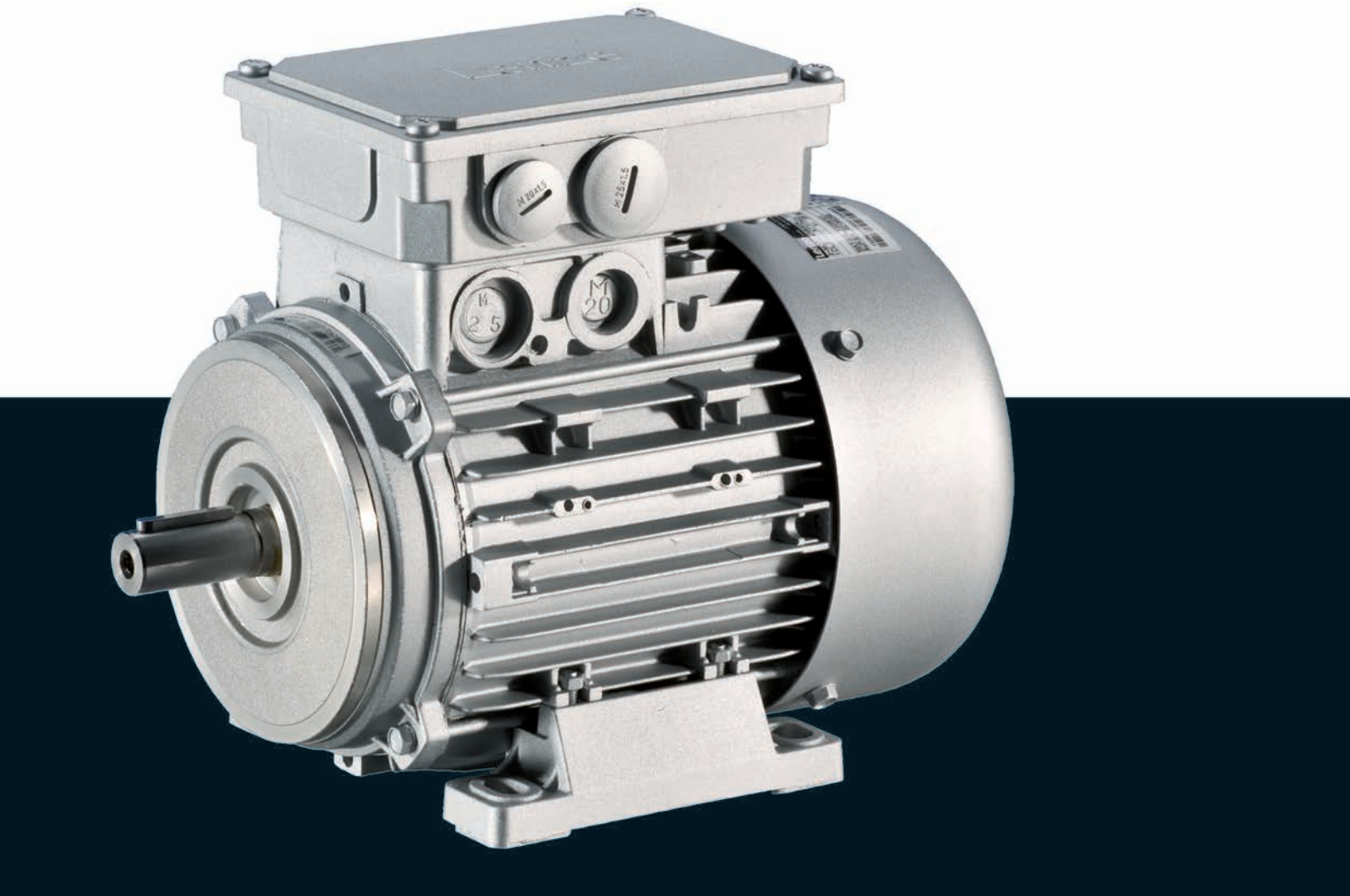

Inverter opt. three-phase AC motors MF

Contents

General information	List of abbreviations	5.7 - 4
	Product key	5.7 - 5
	Product information	5.7 - 6
	Functions and features	5.7 - 7
	Motor – inverter assignment	5.7 - 10
	Dimensioning	5.7 - 11
Technical data	Standards and operating conditions	5.7 - 13
	Permissible radial and axial forces	5.7 - 14
	Rated data for 120 Hz	5.7 - 17
	Dimensions, self-ventilated (4-pole)	5.7 - 18
	Dimensions, forced ventilated (4-pole)	5.7 - 24
	Dimensions, 8400 motec inverter	5.7 - 30
Accessories	Spring-applied brake	5.7 - 31
	Resolver	5.7 - 43
	Incremental encoder and SinCos absolute value encoder	5.7 - 44
	Blower	5.7 - 45
	Temperature monitoring	5.7 - 47
	Terminal box	5.7 - 49
	Plug connectors	5.7 - 50
	ICN connector	5.7 - 50
	M12 connector	5.7 - 55
	HAN connector	5.7 - 56



List of abbreviations

$\eta_{100\,\%}$	[%]	Efficiency
$\eta_{75\,\%}$	[%]	Efficiency
$\eta_{50\,\%}$	[%]	Efficiency
cos ϕ		Power factor
I_N	[A]	Rated current
I_{max}	[A]	Max. current consumption
J	[kgcm²]	Moment of inertia
m	[kg]	Mass
M_a	[Nm]	Starting torque
M_b	[Nm]	Stalling torque
M_{max}	[Nm]	Max. torque
M_N	[Nm]	Rated torque
n_N	[r/min]	Rated speed
P_N	[kW]	Rated power
P_{max}	[kW]	Max. power input

U_{max}	[V]	Max. mains voltage
U_{min}	[V]	Min. mains voltage
$U_{N,\Delta}$	[V]	Rated voltage
$U_{N,Y}$	[V]	Rated voltage

CE	Communauté Européenne
CSA	Canadian Standards Association
DIN	Deutsches Institut für Normung e.V.
EMC	Electromagnetic compatibility
EN	European standard
IEC	International Electrotechnical Commission
IM	International Mounting Code
IP	International Protection Code
NEMA	National Electrical Manufacturers Association
UL	Underwriters Laboratory Listed Product
UR	Underwriters Laboratory Recognized Product
VDE	Verband deutscher Elektrotechniker (Association of German Electrical Engineers)
CCC	China Compulsory Certificate
EAC	Customs union Russia / Belarus / Kazakhstan certificate
cURus	Combined certification marks of UL for the USA and Canada
UkrSEPRO	Certificate for Ukraine



Product key

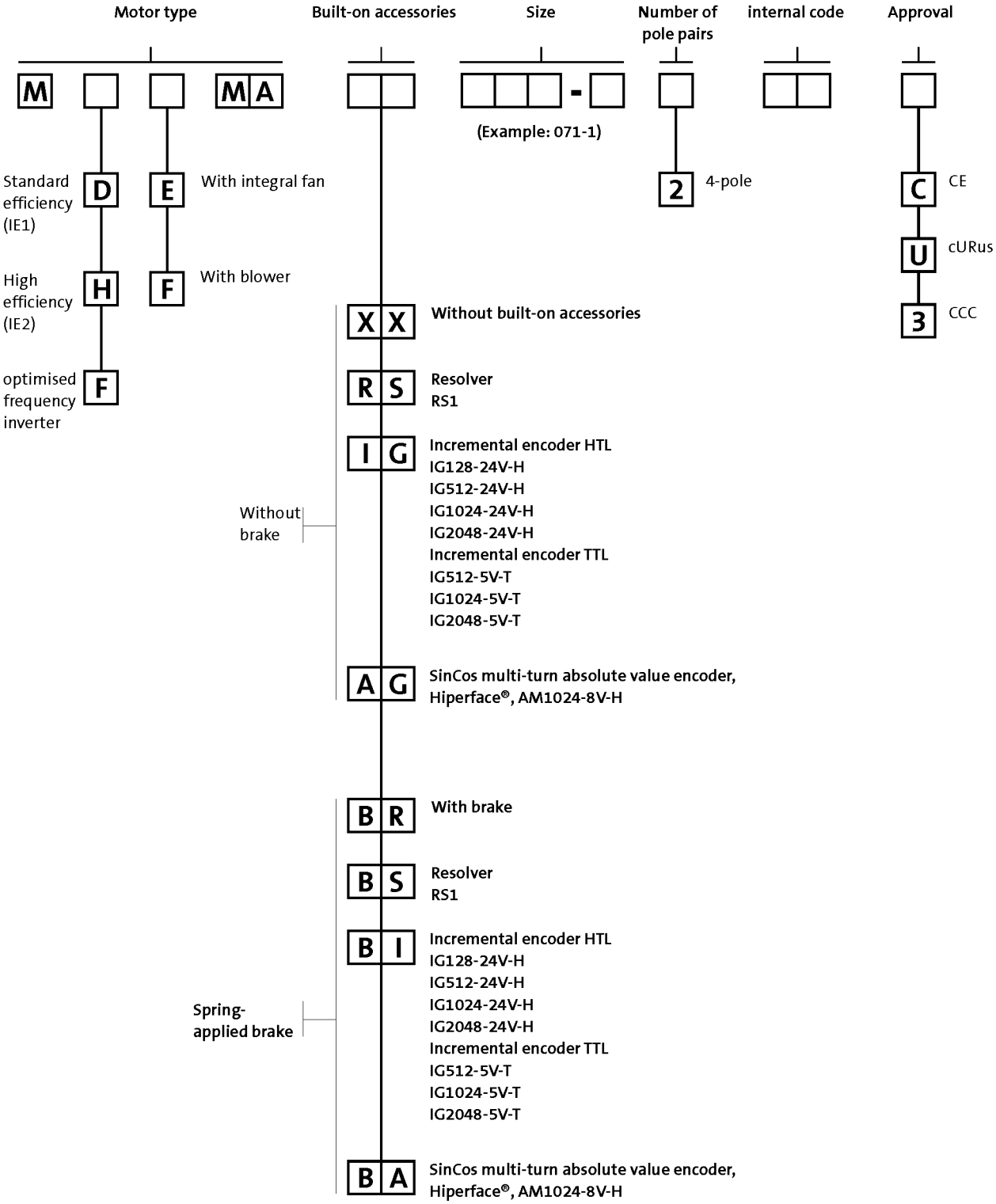
Motor type
Built-on accessories
Size
Number of pole pairs
internal code
Approval
M
MA
(Example: 071-1)
Standard efficiency (IE1)
D
E
With integral fan
High efficiency (IE2)
H
F
With blower
optimised frequency inverter
F
2
4-pole
C
CE
U
cURus
3
CCC
X X
Without built-on accessories
R S
Resolver
RS1
I G
Incremental encoder HTL
IG128-24V-H
IG512-24V-H
IG1024-24V-H
IG2048-24V-H
Incremental encoder TTL
IG512-5V-T
IG1024-5V-T
IG2048-5V-T
Without brake
A G
SinCos multi-turn absolute value encoder, Hiperface®, AM1024-8V-H
B R
With brake
B S
Resolver
RS1
B I
Incremental encoder HTL
IG128-24V-H
IG512-24V-H
IG1024-24V-H
IG2048-24V-H
Incremental encoder TTL
IG512-5V-T
IG1024-5V-T
IG2048-5V-T
Spring-applied brake
B A
SinCos multi-turn absolute value encoder, Hiperface®, AM1024-8V-H



Product information

For a long time now, three-phase AC motors from Lenze have been established in virtually all industrial sectors. Based on our many years of experience in the field of drive and automation technology, we have developed motors, which will ensure that your demands in terms of productivity, quality and availability are perfectly met.
Three-phase AC motors from the L-force series are primarily characterised by their comprehensive modularity. The wide variety of options allows you to precisely adjust the drive characteristics in line with your application. We call this Rightsizing.

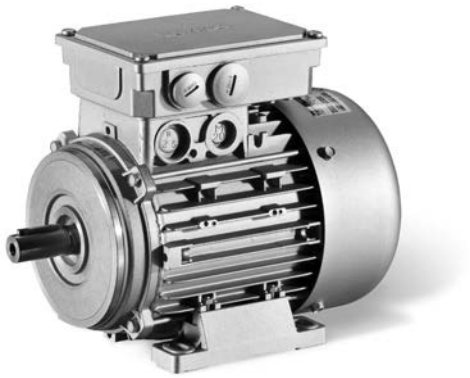

L-force MF three-phase AC motors are available in a power range from 0.55 to 22 kW and have been fully optimised for inverter operation.

The benefits for you:
- Up to sizes smaller than standard three-phase AC motors
- The motors exceed the minimum efficiency levels of efficiency class IE2
- Large speed setting range: 1:24 (without field weakening)
- Dynamic thanks to a low moment of inertia

Basic versions
- The motors feature B3, B5 and B14 designs and dimensions standardised in line with IEC 60072-1 and/or DIN EN 50347 which makes then suitable for universal use.
- The thermal sensors integrated as standard allow for permanent temperature monitoring and are coordinated to the motor winding's temperature class F (155 °C).
- The motors of the basic version are adapted to ambient conditions by IP55 degree of protection .
- In tough operating conditions, the surface and corrosion protection system is provided to reliably protect the motor from aggresive media.

Options
- Various brake sizes – each available with several braking torques – can be combined with the three-phase AC motors.
- The LongLife version of the brake can easily reach 10 x 10^6 switching cycles.
- A resolver and various incremental and absolute value encoders can be fitted for speed and position detection.
- For fast commissioning, the motors are also available with connectors for the power connection, brake, blower and feedback.
- Instead of an integral fan, the motor can optionally be equipped with a blower. No torque reduction is then necessary, even at speeds below 20 Hz.
- For drive tasks in decentralised applications, the motor can be ordered with the motec inverter connected to the terminal box.
- The motors are available with cURus, GOST-R, CCC and UkrSepro approval.



Functions and features

Size					
Motor		063	071	080	090
Design		B3 B5 B14			
Shaft journal					
d x l	[mm]	11 x 23	14 x 30	19 x 40	24 x 50
Spring-applied brake					
Design		Standard or LongLife design Reduced or standard braking torque With rectifier With manual release lever Low noise		Standard or LongLife design Reduced, standard or increased braking torque With rectifier With manual release lever Low noise	
Feedback					
Design		Resolver Incremental encoder Absolute value encoder (multi-turn)			
Temperature sensor					
Thermal contact		TKO			
Thermal detector		KTY83-110 KTY84-130			
PTC thermistor		PTC			
Motor connection					
Power connection		Terminal box ICN connector HAN10E connector HAN modular connector			
Brake connection		Terminal box ICN connector HAN modular connector HAN10E connector			
Blower connection		Terminal box ICN connector			
Feedback connection		Terminal box ICN connector			
Temperature sensor connection		Terminal box TKO or PTC at connector in the power connection KTY at connector in the feedback connection			
Shaft bearings					
Position of the locating bearing		Standard motors (B3, B5, B14): side B Motors for gearbox direct mounting: side A			
Bearing type		Deep-groove ball bearing with high-temperature resistant grease, 2 sealing discs or cover plates			
Colour					
		Not coated Primed Paint in various corrosion-protection designs in accordance with RAL colours			



Functions and features

Size				
Motor		100	112	132
Design				
		B3 B5 B14		B3 B5
Shaft journal				
d x l	[mm]	28 x 60		38 x 80
Spring-applied brake				
Design		Standard or LongLife design Reduced, standard or increased braking torque With rectifier With manual release lever Low noise	Standard design Reduced, standard or increased braking torque With rectifier With manual release lever Low noise	
Feedback				
Design		Resolver Incremental encoder Absolute value encoder (multi-turn)		
Temperature sensor				
Thermal contact		TKO		
Thermal detector		KTY83-110 KTY84-130		
PTC thermistor		PTC		
Motor connection				
Power connection		Terminal box ICN connector HAN10E connector HAN modular connector	Terminal box	Terminal box HAN modular connector
Brake connection		Terminal box ICN connector HAN modular connector HAN10E connector	Terminal box	Terminal box HAN modular connector
Blower connection		Terminal box ICN connector		
Feedback connection		Terminal box ICN connector		
Temperature sensor connection		Terminal box TKO or PTC at connector in the power connection KTY at connector in the feedback connection	Terminal box KTY at connector in the feedback connection	
Shaft bearings				
Position of the locating bearing		Standard motors (B3, B5, B14): side B Motors for gearbox direct mounting: side A		
Bearing type		Deep-groove ball bearing with high-temperature resistant grease, 2 sealing discs or cover plates		
Colour				
		Not coated Primed Paint in various corrosion-protection designs in accordance with RAL colours		



Functions and features

Surface and corrosion protection

For optimum protection of three-phase AC motors against ambient conditions, the surface and corrosion protection system (OKS) offers tailor-made solutions.

Various surface coatings ensure that the motors operate reliably even at high air humidity, in outdoor installation or in the presence of atmospheric impurities. Any colour from the RAL Classic collection can be chosen for the top coat. The three-phase AC motors are also available unpainted (no surface and corrosion protection).

Surface and corrosion protection system	Applications	Measures
OKS-G (primed)	• Dependent on subsequent top coat applied	• 2K PUR priming coat (grey)
OKS-S (small)	• Standard applications • Internal installation in heated buildings • Air humidity up to 90%	• Surface coating corresponding to corrosivity category C1 (subject to EN 12944-2)
OKS-M (medium)	• Internal installation in non-heated buildings • Covered, protected external installation • Air humidity up to 95%	• Surface coating corresponding to corrosivity category C2 (subject to EN 12944-2)
OKS-L (high) OKS-XL (extra Large)	• External installation • Air humidity above 95% • Chemical industry plants • Food industry	• Surface coating corresponding to corrosivity category C3 (subject to EN 12944-2) • Blower cover and B end shield additionally primed • Screws zinc-coated • Cable glands with gaskets • Corrosion-resistant brake with cover ring, stainless friction plate, and chrome-plated armature plate (on request) Optional measures: • Motor recesses sealed off (on request)

Structure of surface coating

Surface and corrosion protection system	Corrosivity category	Surface coating	Colour
	DIN EN ISO 12944-2	Structure	
Without OKS (uncoated)			
OKS-G (primed)		2K PUR priming coat	
OKS-S (small)	Comparable to C1	2K-PUR top coat	Standard: RAL 7012 Optional: RAL Classic
OKS-M (medium)	Comparable to C2	2K PUR priming coat 2K-PUR top coat	
OKS-L (high) OKS-XL (extra Large)	Comparable to C3		



Motor – inverter assignment

Rated frequency 120 Hz

- ► Decentralised inverter 8400 motec (E84DVB)
- ► Inverter Drives 8400 (E84AV)

Rated power	Product key		
	Motor	Inverter	
P_N			
[kW]			
0.55	MF□□□□□063-32	E84DVB□5514S□□□2□	E84AV□□□5514□□0
0.75	MF□□□□□063-42	E84DVB□7514S□□□2□	E84AV□□□7514□□0
1.10	MF□□□□□071-32	E84DVB□1124S□□□2□	E84AV□□□1124□□0
1.50	MF□□□□□071-42	E84DVB□1524S□□□2□	E84AV□□□1524□□0
2.20	MF□□□□□080-32	E84DVB□2224S□□□2□	E84AV□□□2224□□0
3.00	MF□□□□□080-42	E84DVB□3024S□□□2□	E84AV□□□3024□□0
4.00	MF□□□□□090-32	E84DVB□4024S□□□2□	E84AV□□□4024□□0
5.50	MF□□□□□100-12	E84DVB□5524S□□□2□	E84AV□□□5524□□0
7.50	MF□□□□□100-32	E84DVB□7524S□□□2□	E84AV□□□7524□□0
11.0	MF□□□□□112-22		E84AV□□□1134□□0
15.0	MF□□□□□132-12		E84AV□□□1534□□0
18.5	MF□□□□□132-22		E84AV□□□1834□□0
22.0	MF□□□□□132-32		E84AV□□□2234□□0



Dimensioning

Torque derating at low motor frequencies

The diagram shows the motor frame size-dependent torque reduction for self-ventilated motors, taking the thermal behaviour during actuation of the inverter into consideration.

Torque characteristics

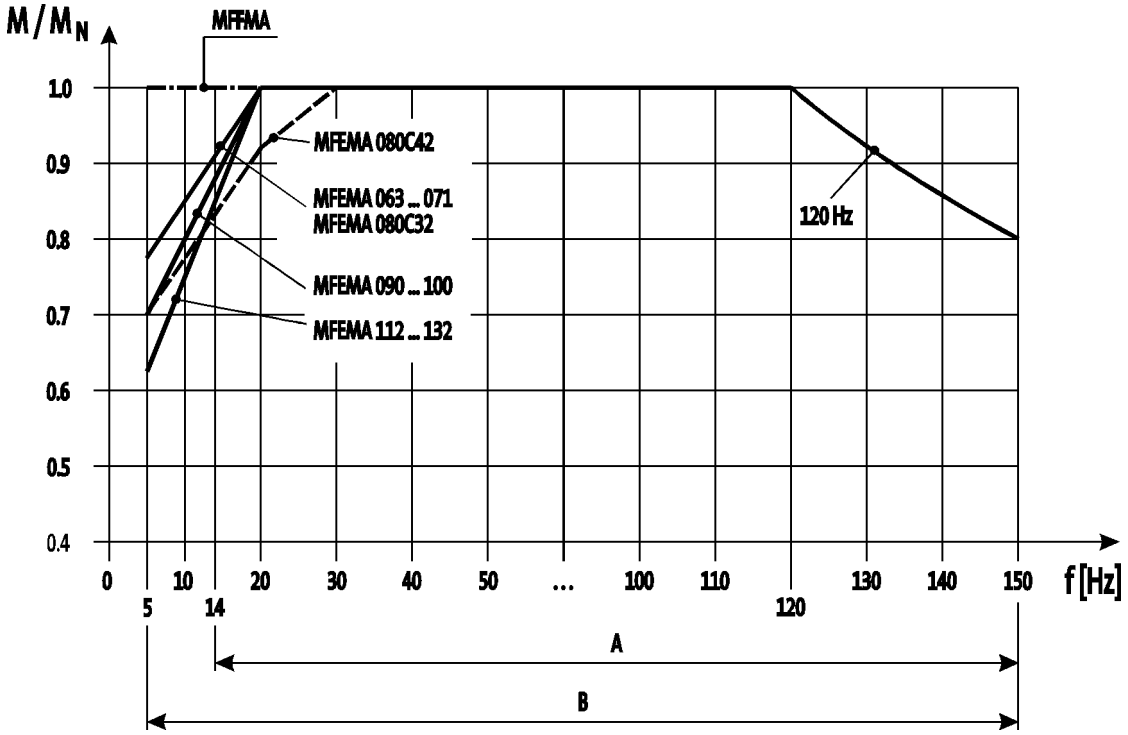

A = Operation with integral fan and brake
B = Operation with integral fan and brake control "Holding current reduction"

► The motor specifications stated in this catalogue for inverter operation apply to operation with a Lenze inverter. If you are uncertain, get in touch with the manufacturer of the inverter to ask whether the device is capable of driving the motor with the stated specifications (e.g. setting range, base frequency).

You can use the Drive Solution Designer for precise drive dimensioning.

The Drive Solution Designer helps you to carry out a fast and high-quality drive dimensioning.
The software includes well-founded and proven knowledge on drive applications and electro-mechanical drive components.

Please contact your Lenze sales office.





Standards and operating conditions

Degree of protection			
EN 60529			IP55 [1)] IP65 [1)] IP66 [1)]
Conformity			
CE			Low-Voltage Directive
			2006/95/EC
EAC			TP TC 004/2011 (TR CU 004/2011)
Approval			
			UkrSEPRO
CCC			GB Standard 12350-2009
CSA			CSA 22.2 No. 100
cURus			UL 1004-1 UL 1004-8 Power Conversion Equipment (File-No. E210321)
Temperature class			
IEC/EN 60034-1; utilisation			B
IEC/EN 60034-1; insulation system (enamel-insulated wire)			F
Min. ambient operating temperature			
	$T_{opr,min}$	[°C]	-20
Max. ambient temperature for operation			
	$T_{opr,max}$	[°C]	40
With power reduction	$T_{opr,max}$	[°C]	60
Site altitude			
Amsl	H_{max}	[m]	4000
Max. speed			
	n_{max}	[r/min]	4500

[1)] Designs with different degrees of protection:
IP55 with brake (IP54 with manual release lever).
IP54 with resolver RS1.
IP54 with HTL incremental encoder IG128-24V-H.



Permissible radial and axial forces

► Forces at medium speed 2000 r/min.

Application of forces

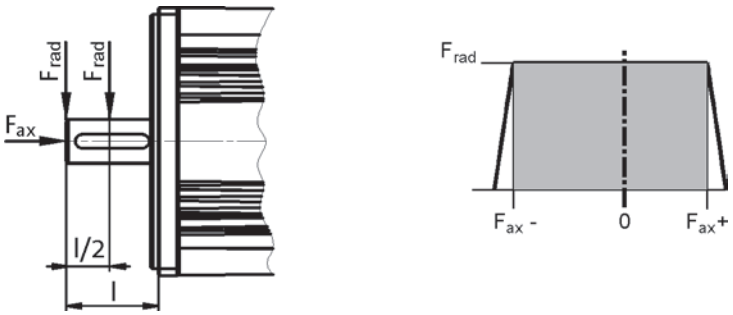

Application of force at l/2

Bearing service life L_{10}												
	10000 h			20000 h			30000 h			50000 h		
	F_{rad} [N]	$F_{ax,-}$ [N]	$F_{ax,+}$ [N]	F_{rad} [N]	$F_{ax,-}$ [N]	$F_{ax,+}$ [N]	F_{rad} [N]	$F_{ax,-}$ [N]	$F_{ax,+}$ [N]	F_{rad} [N]	$F_{ax,-}$ [N]	$F_{ax,+}$ [N]
063	600	-600	300	470	-480	180	410	-430	120	350	-370	70
071	740	-800	470	590	-630	300	510	-550	220	430	-470	140
080	960	-1090	580	770	-860	350	670	-760	250	570	-650	140
090	1050	-1160	630	840	-920	390	730	-800	280	620	-690	160
100	1490	-1490	910	1190	-1160	580	1050	-1010	430	890	-860	270
112	2250	-2330	1340	1790	-1830	840	1570	-1600	610	1330	-1360	370
132	3300	-2150	1190	2640	-1670	710	2320	-1440	480	1970	-1210	250
160	3750	-2700	1520	3000	-2130	950	2640	-1830	670	2250	-1440	360
180	5620	-3270	1790	4500	-2580	1120	3960	-2210	790	3375	-1750	420
200	5620	-3270	1790	4500	-2580	1120	3960	-2210	790	3375	-1750	420
225	5200	-3100	3900	3900	-2100	2900	3300	-1300	2100	2650	-1000	1800

► The values for the bearing service life L_{10} refer to an average speed of 2000 r/min. Depending on the ambient temperatures, the service life of the bearings is also reduced by the grease life-time.
► Data for axial forces relate to the maximum radial force with the corresponding bearing service life.



Permissible radial and axial forces

► Forces at medium speed 2000 r/min.

Application of force at l

	Bearing service life L_{10}											
	10000 h			20000 h			30000 h			50000 h		
	F_{rad} [N]	$F_{ax,-}$ [N]	$F_{ax,+}$ [N]	F_{rad} [N]	$F_{ax,-}$ [N]	$F_{ax,+}$ [N]	F_{rad} [N]	$F_{ax,-}$ [N]	$F_{ax,+}$ [N]	F_{rad} [N]	$F_{ax,-}$ [N]	$F_{ax,+}$ [N]
063	400	-600	300	370	-480	180	320	-430	120	300	-370	70
071	680	-800	470	540	-630	300	470	-550	220	400	-470	140
080	880	-1090	580	700	-860	350	610	-760	250	520	-650	140
090	940	-1160	630	750	-920	390	660	-800	280	560	-690	160
100	1350	-1490	910	1080	-1160	580	940	-1010	430	800	-860	270
112	2040	-2330	1340	1620	-1830	840	1420	-1600	610	1210	-1360	370
132	3020	-2150	1190	2420	-1670	710	2120	-1440	480	1800	-1210	250
160	3410	-2700	1520	2730	-2130	950	2400	-1830	670	2050	-1440	360
180	4550	-3270	1790	3640	-2580	1120	3200	-2210	790	2730	-1750	420
200	4550	-3270	1790	3640	-2580	1120	3200	-2210	790	2730	-1750	420
225	4800	-3100	3900	3600	-2100	2900	3000	-1300	2100	2400	-1000	1800

► The values for the bearing service life L_{10} refer to an average speed of 2000 r/min. Depending on the ambient temperatures, the service life of the bearings is also reduced by the grease lifetime.
► Data for axial forces relate to the maximum radial force with the corresponding bearing service life.



Permissible radial and axial forces

► Forces at medium speed 3500 r/min.

Application of forces

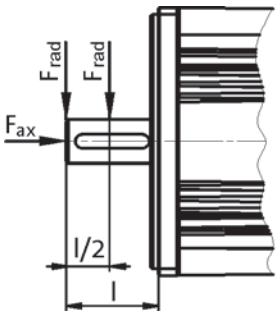

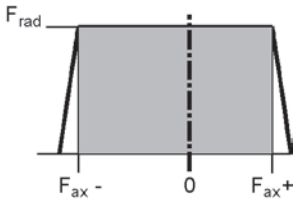

Application of force at l/2

Bearing service life L_{10}												
	10000 h			20000 h			30000 h			50000 h		
	F_{rad}	$F_{ax,-}$	$F_{ax,+}$	F_{rad}	$F_{ax,-}$	$F_{ax,+}$	F_{rad}	$F_{ax,-}$	$F_{ax,+}$	F_{rad}	$F_{ax,-}$	$F_{ax,+}$
	[N]	[N]	[N]	[N]	[N]	[N]	[N]	[N]	[N]	[N]	[N]	[N]
063	500	-430	270	400	-330	180	350	-290	140	290	-240	90
071	610	-580	250	490	-490	130	430	-430	80	360	-360	30
080	800	-790	280	640	-640	130	560	-570	60	480	-500	0
090	880	-830	310	700	-670	150	610	-600	70	520	-520	0
100	1250	-1060	480	1000	-840	250	870	-740	150	740	-630	50
112	1870	-1680	700	1500	-1500	360	1310	-1190	200	1110	-1030	40
132	2750	-1400	440	2200	-1100	130	1700	-980	20			

5.7

Application of force at l

Bearing service life L_{10}												
	10000 h			20000 h			30000 h			50000 h		
	F_{rad}	$F_{ax,-}$	$F_{ax,+}$	F_{rad}	$F_{ax,-}$	$F_{ax,+}$	F_{rad}	$F_{ax,-}$	$F_{ax,+}$	F_{rad}	$F_{ax,-}$	$F_{ax,+}$
	[N]	[N]	[N]	[N]	[N]	[N]	[N]	[N]	[N]	[N]	[N]	[N]
063	460	-410	260	370	-320	170	320	-280	130	270	-240	80
071	570	-560	230	450	-450	120	400	-400	70	330	-350	20
080	730	-750	250	580	-610	100	510	-550	40			
090	790	-790	270	630	-640	120	550	-570	50			
100	1120	-1000	420	900	-800	210	790	-700	120	670	-600	20
112	1690	-1600	610	1350	-1280	300	1190	-1140	150	1000	-1000	0
132	2520	-1300	330	2020	-1020	60	1300	-960	0			

► The values for the bearing service life L_{10} refer to an average speed of 3500 r/min. Depending on the ambient temperatures, the service life of the bearings is also reduced by the grease lifetime.
► Data for axial forces relate to the maximum radial force with the corresponding bearing service life.



Rated data for 120 Hz

4-pole motors

	P_N	n_N	$U_{N,\Delta}$	$I_{N,\Delta}$	$U_{N,Y}$	$I_{N,Y}$
			± 10 %		± 10 %	
	[kW]	[r/min]	[V]	[A]	[V]	[A]
MF□□□□□063-32	0.55	3440	200	3.20	345	1.80
MF□□□□□063-42	0.75	3400	210	4.00	370	2.30
MF□□□□□071-32	1.10	3490	200	5.50	345	3.20
MF□□□□□071-42	1.50	3450	205	6.80	360	3.90
MF□□□□□080-32	2.20	3500	200	9.10	345	5.30
MF□□□□□080-42	3.00	3480	210	11.4	370	6.60
MF□□□□□090-32	4.00	3480			370	8.50
MF□□□□□100-12	5.50	3525			340	12.9
MF□□□□□100-32	7.50	3515			375	15.9
MF□□□□□112-22	11.0	3530			370	23.5
MF□□□□□132-12	15.0	3560			370	31.2
MF□□□□□132-22	18.5	3560			360	39.0
MF□□□□□132-32	22.0	3550			380	44.5

	M_N	M_{max}	cos ϕ	$\eta_{75\,\%}$	$\eta_{100\,\%}$	J [1)]	m [1)]
	[Nm]	[Nm]		[%]	[%]	[kgcm²]	[kg]
MF□□□□□063-32	1.53	6.00	0.68	75.0	75.0	3.70	4.40
MF□□□□□063-42	2.11	8.00	0.69	79.6	79.6	3.70	4.40
MF□□□□□071-32	3.01	12.0	0.77	81.4	81.4	12.8	6.40
MF□□□□□071-42	4.15	16.0	0.80	82.8	82.8	12.8	6.40
MF□□□□□080-32	6.00	24.0	0.86	84.3	84.3	28.0	11.0
MF□□□□□080-42	8.20	32.0	0.86	85.5	85.5	28.0	11.0
MF□□□□□090-32	10.9	44.0	0.85	87.0	86.6	32.0	18.0
MF□□□□□100-12	14.9	60.0	0.81	87.9	87.7	61.0	26.5
MF□□□□□100-32	20.3	80.0	0.81	88.9	88.7	61.0	26.5
MF□□□□□112-22	29.7	120	0.78	89.8	89.8	107	38.0
MF□□□□□132-12	40.3	160	0.84	88.9	90.6	336	66.0
MF□□□□□132-22	49.6	200	0.84	89.9	91.2	336	66.0
MF□□□□□132-32	59.2	240	0.83	90.5	91.6	336	66.0

[1)] Without accessories



Dimensions, self-ventilated (4-pole)

Design B3

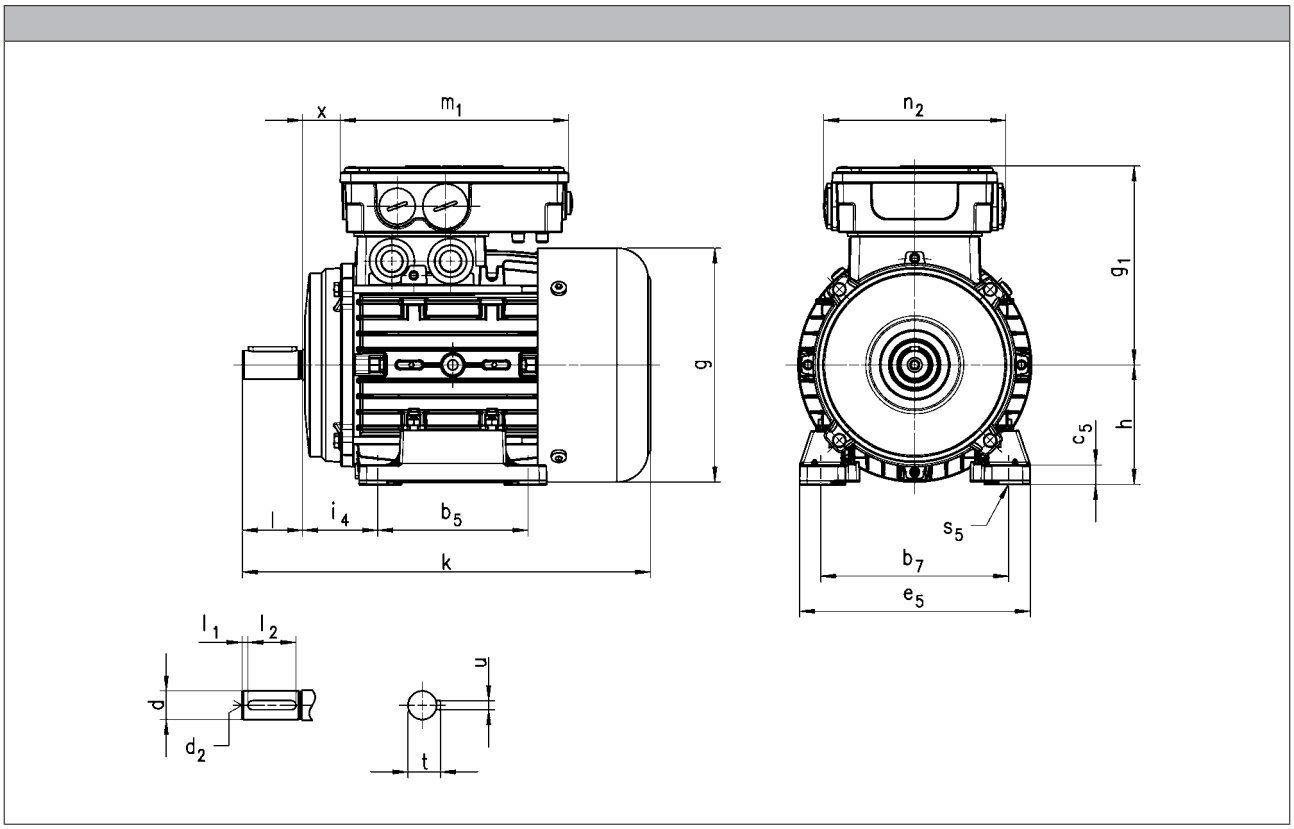

Motor type	MFEMAXX						MFEMABR					
	k	g	g_1	x	m_1	n_2	k	g	g_1	x	m_1	n_2
	[mm]	[mm]	[mm]	[mm]	[mm]	[mm]	[mm]	[mm]	[mm]	[mm]	[mm]	[mm]
063	215	123	109	17	136	103	271	123	109	17	136	103
071	246	139	118	24			297	139	118	24		
080	272	156	132	25	152	121	345	154	132	25	152	121
090	327	176	137	29			399	176	137	29		
100	382	194	147	36			458	194	147	36		
112	392	218	158	38			479	218	158	38		
132	497	258	187	51	194	125	576	258	187	51	194	125



Dimensions, self-ventilated (4-pole)

Design B3

Motor type	MFEMARS MFEMAIG MFEMAAG						MFEMABS MFEMABI MFEMABA					
	k	g	g_1	x	m_1	n_2	k	g	g_1	x	m_1	n_2
	[mm]	[mm]	[mm]	[mm]	[mm]	[mm]	[mm]	[mm]	[mm]	[mm]	[mm]	[mm]
063	271	123	109	17	136	103	318	123	109	17	136	103
071	297	139	118	24			338	139	133	13	194	125
080	369	156	132	25	152	121	383	156	142	24		
090	418	178	137	29			436	176	147	28		
100	463	196	147	36			479	194	158	35		
112	472	220	158	38			509	218	168	37		
132	599	261	187	51	194	125	621	258	187	51		

	d	d	d_2	l	l_1	l_2	t	u
	j6	k6						
	[mm]	[mm]	[mm]	[mm]	[mm]	[mm]	[mm]	[mm]
063	11		M4	23	3.5	16	12.5	4.0
071	14		M5	30	4.0	22	16.0	5.0
080	19		M6	40		32	21.5	6.0
090	24		M8	50	5.0	40	27.0	8.0
100	28		M10	60		50	31.0	
112								
132		38	M12	80		70	41.0	10.0

	b_7	i_4	b_5	e_5	h	c_5	s_5
	[mm]	[mm]	[mm]	[mm]	[mm]	[mm]	[mm]
063	100	40	80	120	63	10	7.0
071	112	45	90	134	71	11	
080	125	50	100	154	80	13	10.0
090	140	56	125	174	90		
100	160	63	140	194	100	15	12.0
112	190	70		223	112	14	
132	216	89	178	260	132	18	



Dimensions, self-ventilated (4-pole)

Design B5

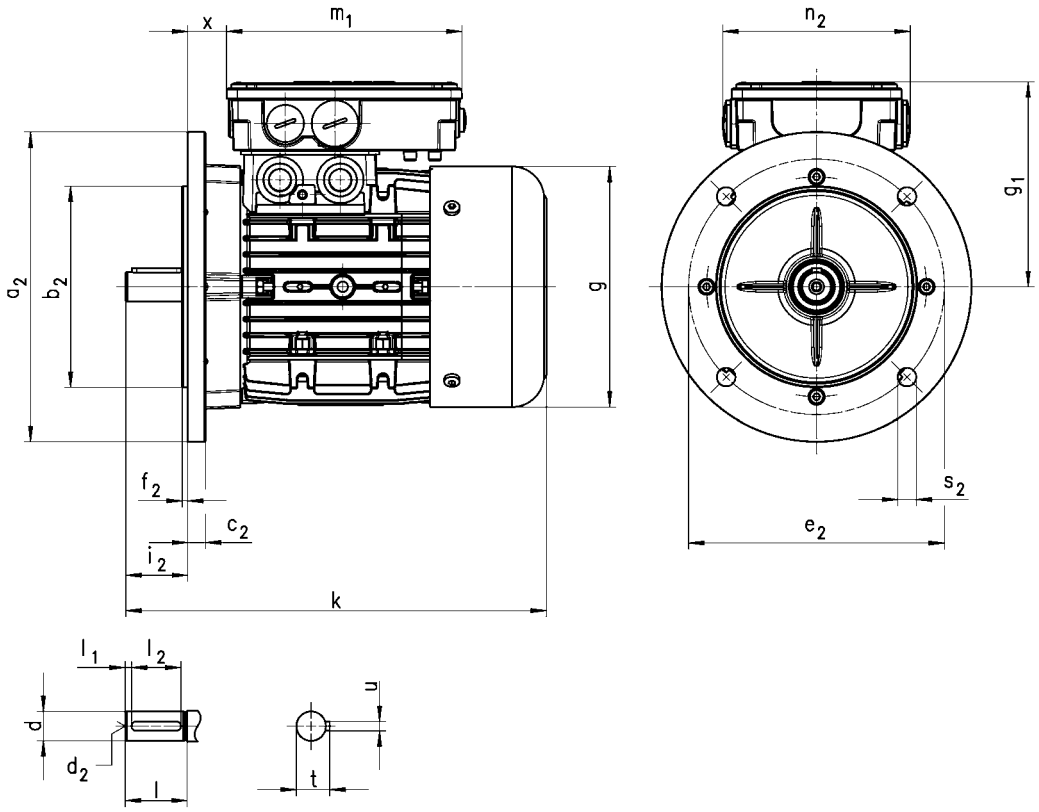

5.7

Motor type	MFEMAXX						MFEMABR					
	k	g	g_1	x	m_1	n_2	k	g	g_1	x	m_1	n_2
	[mm]	[mm]	[mm]	[mm]	[mm]	[mm]	[mm]	[mm]	[mm]	[mm]	[mm]	[mm]
063	215	123	109	17	136	103	271	123	109	17	136	103
071	246	139	118	24			297	139	118	24		
080	272	156	132	25	152	121	345	154	132	25	152	121
090	327	176	137	29			399	176	137	29		
100	382	194	147	36			458	194	147	36		
112	392	218	158	38			479	218	158	38		
132	497	258	187	51	194	125	576	258	187	51	194	125



Dimensions, self-ventilated (4-pole)

Design B5

Motor type	MFEMARS MFEMAIG MFEMAAG						MFEMABS MFEMABI MFEMABA					
	k	g	g_1	x	m_1	n_2	k	g	g_1	x	m_1	n_2
	[mm]	[mm]	[mm]	[mm]	[mm]	[mm]	[mm]	[mm]	[mm]	[mm]	[mm]	[mm]
063	271	123	109	17	136	103	318	123	109	17	136	103
071	297	139	118	24			338	139	133	13	194	125
080	369	156	132	25	152	121	383	156	142	24		
090	418	178	137	29			436	176	147	28		
100	463	196	147	36			479	194	158	35		
112	472	220	158	38			509	218	168	37		
132	599	261	187	51	194	125	621	258	187	51		

	d	d	d_2	l	l_1	l_2	t	u
	j6	k6						
	[mm]	[mm]	[mm]	[mm]	[mm]	[mm]	[mm]	[mm]
063	11		M4	23	3.5	16	12.5	4.0
071	14		M5	30	4.0	22	16.0	5.0
080	19		M6	40		32	21.5	6.0
090	24		M8	50	5.0	40	27.0	8.0
100	28		M10	60		50	31.0	
112								
132		38	M12	80		70	41.0	10.0

	Flange size							
		a_2	b_2	c_2	e_2	f_2	s_2	i_2
			j6					-0.6 ... 0.5
		[mm]	[mm]	[mm]	[mm]	[mm]	[mm]	[mm]
063	FF115	140	95	10	115	3.0	10.0	23.0
071	FF130	160	110		130	3.5		30.0
080	FF165	200	130	11	165		12.0	40.0
090								50.0
100	FF215	250	180	15	215	4.0	14.5	60.0
112								
132	FF265	300	230	20	265			80.0



Dimensions, self-ventilated (4-pole)

Design B14

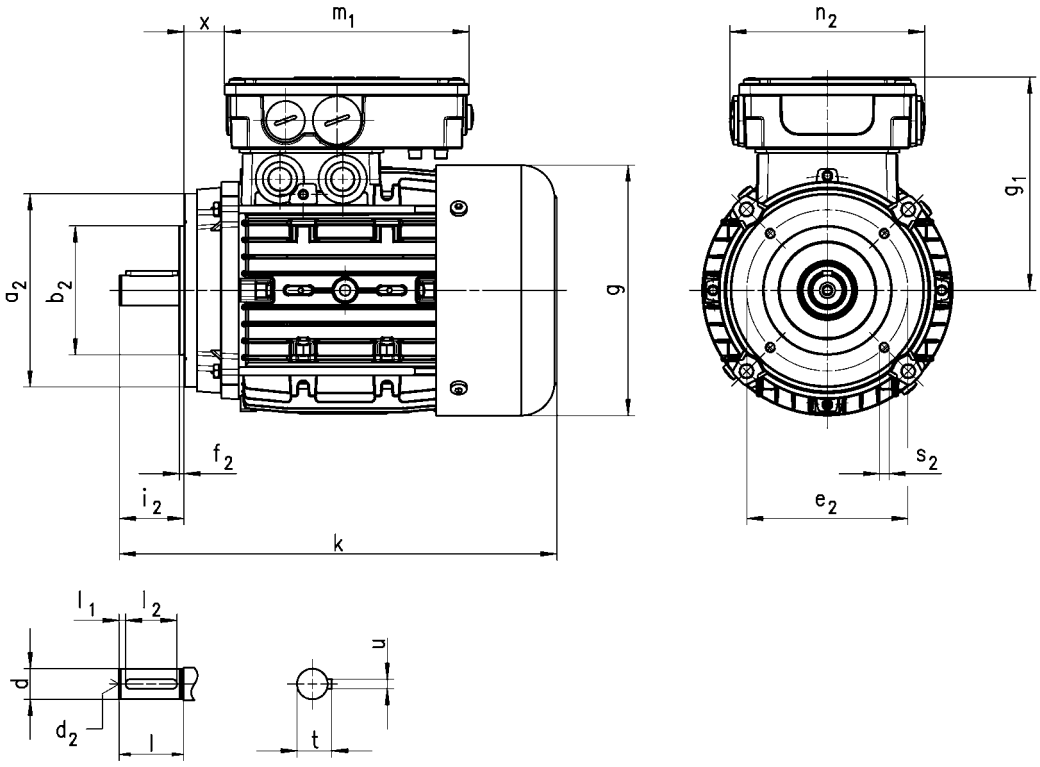

5.7

Motor type	MFEMAXX						MFEMABR					
	k	g	g_1	x	m_1	n_2	k	g	g_1	x	m_1	n_2
	[mm]	[mm]	[mm]	[mm]	[mm]	[mm]	[mm]	[mm]	[mm]	[mm]	[mm]	[mm]
063	215	123	109	17	136	103	271	123	109	17	136	103
071	246	139	118	24			297	139	118	24		
080	272	156	132	25	152	121	345	154	132	25	152	121
090	327	176	137	29			399	176	137	29		
100	382	194	147	36			458	194	147	36		
112	392	218	158	38			479	218	158	38		



Dimensions, self-ventilated (4-pole)

Design B14

Motor type	MFEMARS MFEMAIG MFEMAAG	MFEMABS MFEMABI MFEMABA

	k	g	g_1	x	m_1	n_2	k	g	g_1	x	m_1	n_2
	[mm]	[mm]	[mm]	[mm]	[mm]	[mm]	[mm]	[mm]	[mm]	[mm]	[mm]	[mm]
063	271	123	109	17	136	103	318	123	109	17	136	103
071	297	139	118	24			338	139	133	13	194	125
080	369	156	132	25	152	121	383	156	142	24		
090	418	178	137	29			436	176	147	28		
100	463	196	147	36			479	194	158	35		
112	472	220	158	38			509	218	168	37		

	d	d	d_2	l	l_1	l_2	t	u
	j6	k6						
	[mm]	[mm]	[mm]	[mm]	[mm]	[mm]	[mm]	[mm]
063	11		M4	23	3.5	16	12.5	4.0
071	14		M5	30	4.0	22	16.0	5.0
080	19		M6	40		32	21.5	6.0
090	24		M8	50	5.0	40	27.0	8.0
100	28		M10	60		50	31.0	
112								

	Flange size						
		a_2	b_2	e_2	f_2	s_2	i_2
			j6				-0.6 ... 0.5
		[mm]	[mm]	[mm]	[mm]	[mm]	[mm]
063	FT75	90	60	75	2.5	M5x10	23.0
071	FT85	105	70	85		M6x10	30.0
080	FT100	120	80	100	3.0	M6x12	40.0
	FT130	160	110	130	3.5	M8x14	
090	FT115	140	95	115	3.0	M8x16	50.0
	FT130	160	110	130	3.5		
100						M8x14	60.0
112						M8x16	



Dimensions, forced ventilated (4-pole)

Design B3

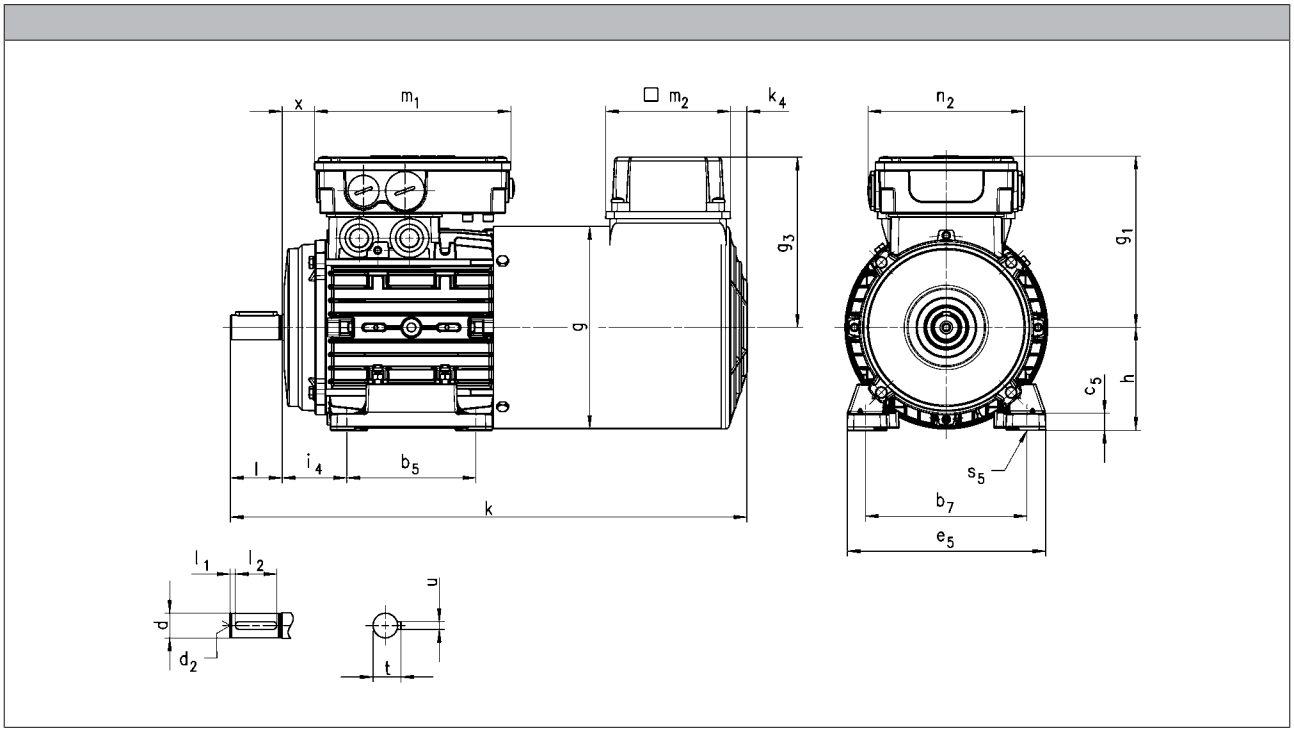

Motor type	MFFMAXX									MFFMABR								
	k	g	g_1	x	m_1	n_2	g_3	k_4	m_2	k	g	g_1	x	m_1	n_2	g_3	k_4	m_2
	[mm]	[mm]	[mm]	[mm]	[mm]	[mm]	[mm]	[mm]	[mm]	[mm]	[mm]	[mm]	[mm]	[mm]	[mm]	[mm]	[mm]	[mm]
063	345	123	109	17	136	103	115	12	95	385	123	109	17	136	103	115	12	95
071	373	138	118	24			122			410	138	118	24			122		
080	400	156	132	25	152	121	132	13	96	455	156	132	25	152	121	132	13	96
090	460	176	137	29			141	22	95	513	176	137	29			141	22	95
100	491	194	147	36			150			552	194	147	36			150		
112	494	218	158	38			162			575	218	158	38			162		
132	612	257	187	51	194	125	182	32		698	257	187	51	194	125	182	32	



Dimensions, forced ventilated (4-pole)

Design B3

Motor type	MFFMARS MFFMAIG MFFMAAG									MFFMABS MFFMABI MFFMABA								
	k	g	g_1	x	m_1	n_2	g_3	k_4	m_2	k	g	g_1	x	m_1	n_2	g_3	k_4	m_2
	[mm]	[mm]	[mm]	[mm]	[mm]	[mm]	[mm]	[mm]	[mm]	[mm]	[mm]	[mm]	[mm]	[mm]	[mm]	[mm]	[mm]	[mm]
063	345	123	109	17	136	103	115	12	95	385	123	109	17	136	103	115	12	95
071	373	138	118	24			122			410	138	133	13	194	125	122		
080	400	156	132	25	152	121	132	13	96	455	156	142	24			132	13	96
090	460	176	137	29			141	22	95	513	176	147	28			141	22	95
100	491	194	147	36			150			552	194	158	35			150		
112	575	218	158	38			162			575	218	168	37			162		
132	698	257	187	51	194	125	182	32		698	257	187	51			182	32	

	d	d	d_2	l	l_1	l_2	t	u
	j6	k6						
	[mm]	[mm]	[mm]	[mm]	[mm]	[mm]	[mm]	[mm]
063	11		M4	23	3.5	16	12.5	4.0
071	14		M5	30	4.0	22	16.0	5.0
080	19		M6	40		32	21.5	6.0
090	24		M8	50	5.0	40	27.0	8.0
100	28		M10	60		50	31.0	
112								
132		38	M12	80		70	41.0	10.0

	b_7	i_4	b_5	e_5	h	c_5	s_5
	[mm]	[mm]	[mm]	[mm]	[mm]	[mm]	[mm]
063	100	40	80	120	63	10	7.0
071	112	45	90	134	71	11	
080	125	50	100	154	80	13	10.0
090	140	56	125	174	90		
100	160	63	140	194	100	15	12.0
112	190	70		223	112	14	
132	216	89	178	260	132	18	



Dimensions, forced ventilated (4-pole)

Design B5

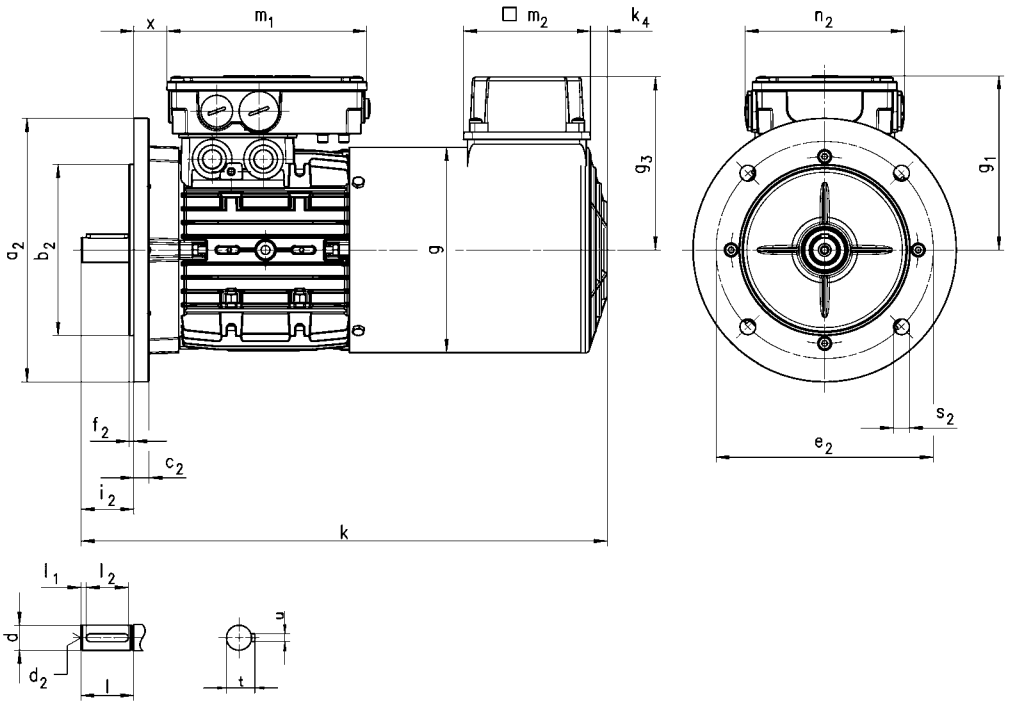

Motor type	MFFMAXX									MFFMABR								
	k	g	g_1	x	m_1	n_2	g_3	k_4	m_2	k	g	g_1	x	m_1	n_2	g_3	k_4	m_2
	[mm]	[mm]	[mm]	[mm]	[mm]	[mm]	[mm]	[mm]	[mm]	[mm]	[mm]	[mm]	[mm]	[mm]	[mm]	[mm]	[mm]	[mm]
063	345	123	109	17	136	103	115	12	95	385	123	109	17	136	103	115	12	95
071	373	138	118	24			122			410	138	118	24			122		
080	400	156	132	25	152	121	132	13	96	455	156	132	25	152	121	132	13	96
090	460	176	137	29			141	22	95	513	176	137	29			141	22	95
100	491	194	147	36			150			552	194	147	36			150		
112	494	218	158	38			162			575	218	158	38			162		
132	612	257	187	51	194	125	182	32		698	257	187	51	194	125	182	32	



Dimensions, forced ventilated (4-pole)

Design B5

Motor type	MFFMARS MFFMAIG MFFMAAG									MFFMABS MFFMABI MFFMABA								
	k	g	g_1	x	m_1	n_2	g_3	k_4	m_2	k	g	g_1	x	m_1	n_2	g_3	k_4	m_2
	[mm]	[mm]	[mm]	[mm]	[mm]	[mm]	[mm]	[mm]	[mm]	[mm]	[mm]	[mm]	[mm]	[mm]	[mm]	[mm]	[mm]	[mm]
063	345	123	109	17	136	103	115	12	95	385	123	109	17	136	103	115	12	95
071	373	138	118	24			122			410	138	133	13	194	125	122		
080	400	156	132	25	152	121	132	13	96	455	156	142	24			132	13	96
090	460	176	137	29			141	22	95	513	176	147	28			141	22	95
100	491	194	147	36			150			552	194	158	35			150		
112	575	218	158	38			162			575	218	168	37			162		
132	698	257	187	51	194	125	182	32		698	257	187	51			182	32	

	d	d	d_2	l	l_1	l_2	t	u
	j6	k6						
	[mm]	[mm]	[mm]	[mm]	[mm]	[mm]	[mm]	[mm]
063	11		M4	23	3.5	16	12.5	4.0
071	14		M5	30	4.0	22	16.0	5.0
080	19		M6	40		32	21.5	6.0
090	24		M8	50	5.0	40	27.0	8.0
100	28		M10	60		50	31.0	
112								
132		38	M12	80		70	41.0	10.0

	Flange size							
		a_2	b_2	c_2	e_2	f_2	s_2	i_2
			j6					-0.6 ... 0.5
		[mm]	[mm]	[mm]	[mm]	[mm]	[mm]	[mm]
063	FF115	140	95	10	115	3.0	10.0	23.0
071	FF130	160	110		130	3.5		30.0
080	FF165	200	130	11	165		12.0	40.0
090								50.0
100	FF215	250	180	15	215	4.0	14.5	60.0
112								
132	FF265	300	230	20	265			80.0



Dimensions, forced ventilated (4-pole)

Design B14

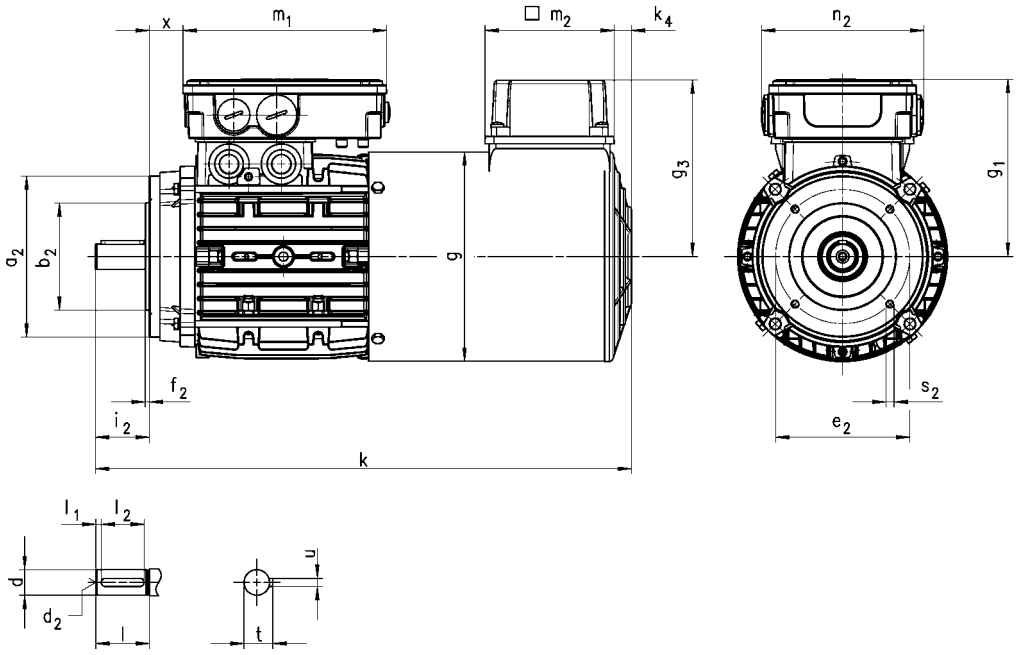

Motor type	MFFMAXX									MFFMABR								
	k	g	g_1	x	m_1	n_2	g_3	k_4	m_2	k	g	g_1	x	m_1	n_2	g_3	k_4	m_2
	[mm]	[mm]	[mm]	[mm]	[mm]	[mm]	[mm]	[mm]	[mm]	[mm]	[mm]	[mm]	[mm]	[mm]	[mm]	[mm]	[mm]	[mm]
063	345	123	109	17	136	103	115	12	95	385	123	109	17	136	103	115	12	95
071	373	138	118	24			122			410	138	118	24			122		
080	400	156	132	25	152	121	132	13	96	455	156	132	25	152	121	132	13	96
090	460	176	137	29			141	22	95	513	176	137	29			141	22	95
100	491	194	147	36			150			552	194	147	36			150		
112	494	218	158	38			162			575	218	158	38			162		



Dimensions, forced ventilated (4-pole)

Design B14

Motor type	MFFMARS MFFMAIG MFFMAAG									MFFMABS MFFMABI MFFMABA								
	k	g	g_1	x	m_1	n_2	g_3	k_4	m_2	k	g	g_1	x	m_1	n_2	g_3	k_4	m_2
	[mm]	[mm]	[mm]	[mm]	[mm]	[mm]	[mm]	[mm]	[mm]	[mm]	[mm]	[mm]	[mm]	[mm]	[mm]	[mm]	[mm]	[mm]
063	345	123	109	17	136	103	115	12	95	385	123	109	17	136	103	115	12	95
071	373	138	118	24			122			410	138	133	13	194	125	122		
080	400	156	132	25	152	121	132	13	96	455	156	142	24			132	13	96
090	460	176	137	29			141	22	95	513	176	147	28			141	22	95
100	491	194	147	36			150			552	194	158	35			150		
112	575	218	158	38			162			575	218	168	37			162		

	d	d	d_2	l	l_1	l_2	t	u
	j6	k6						
	[mm]	[mm]	[mm]	[mm]	[mm]	[mm]	[mm]	[mm]
063	11		M4	23	3.5	16	12.5	4.0
071	14		M5	30	4.0	22	16.0	5.0
080	19		M6	40		32	21.5	6.0
090	24		M8	50	5.0	40	27.0	8.0
100	28		M10	60		50	31.0	
112								

	Flange size						
		a_2	b_2	e_2	f_2	s_2	i_2
			j6				-0.6 ... 0.5
		[mm]	[mm]	[mm]	[mm]	[mm]	[mm]
063	FT75	90	60	75	2.5	M5x10	23.0
071	FT85	105	70	85		M6x10	30.0
080	FT100	120	80	100	3.0	M6x12	40.0
	FT130	160	110	130	3.5	M8x14	
090	FT115	140	95	115	3.0	M8x16	50.0
	FT130	160	110	130	3.5		
100						M8x14	60.0
112						M8x16	



Dimensions, 8400 motec inverter

Rated frequency 120 Hz

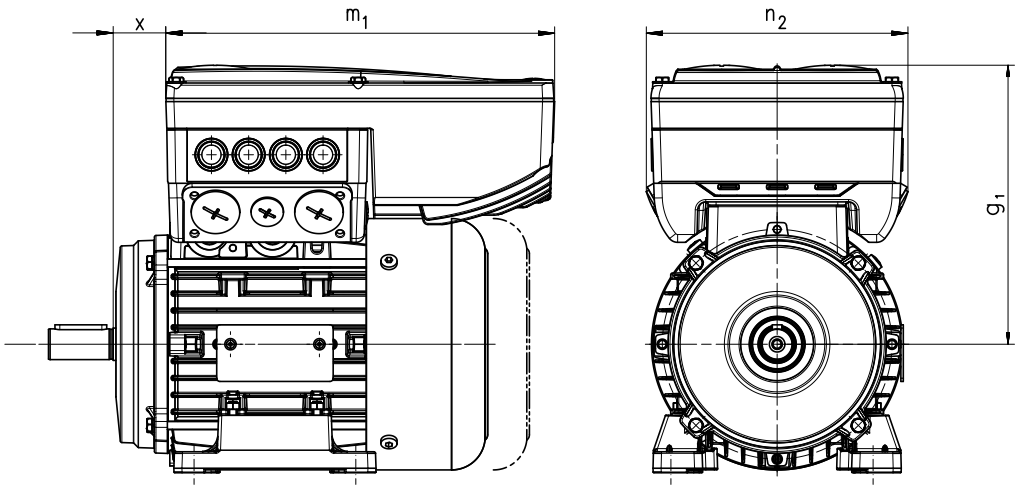

Product key					
Motor	Inverter				
		$g_{1,\ 120Hz}$	$m_{1,\ 120Hz}$	$n_{2,\ 120Hz}$	x_{120Hz}
		[mm]	[mm]	[mm]	[mm]
MF□□□□□063-32	E84DVB□5514S□□□2□	154	241	161	23.5
MF□□□□□063-42	E84DVB□7514S□□□2□				
MF□□□□□071-32	E84DVB□1124S□□□2□	163			29.5
MF□□□□□071-42	E84DVB□1524S□□□2□				21.0
MF□□□□□080-32	E84DVB□2224S□□□2□	201	260	176	31.5
MF□□□□□080-42	E84DVB□3024S□□□2□				
MF□□□□□090-32	E84DVB□4024S□□□2□	261	325	195	23.3
MF□□□□□100-12	E84DVB□5524S□□□2□	272			29.9
MF□□□□□100-32	E84DVB□7524S□□□2□				



Spring-applied brake

Three-phase AC motors can be fitted with a spring-applied brake. This is activated after the supply voltage is switched off (closed-circuit principle). For optimum adjustment of the brake motor to the application, a range of braking torques and control modes is available for every motor frame size. For applications with very high operating frequencies the brake is also available in a LongLife version, with reinforced mechanical brake components.

Features

Versions
- **Standard**
  - 1 x 10^6 repeating switching cycles
  - 1 x 10^6 reversing switching cycles
- **LongLife**
  - 10 x 10^6 repeating switching cycles
  - 15 x 10^6 reversing switching cycles

Control
- DC supply
- AC supply via rectifier in the terminal box

Degree of protection
- Without manual release IP55
- With manual release IP54

Friction lining
- Non-asbestos, low wearing

Options
- Manual release
- UL/CSA approval
- Noise-reduced

Motor – brake assignment

Design	Standard		LongLife	
Motor frame size	**Size**	**Rated torque**	**Size**	**Rated torque**
	Brake		Brake	
		M_k		M_k
		[Nm]		[Nm]
063-32 063-42	06 06	2.50 4.00	06	4.00
071-32	06 06 08	2.50 4.00 3.50	06 08	4.00 3.50
071-42	06 06 08 08	2.50 4.00 3.50 8.00	06 08 08	4.00 3.50 8.00
080-32	08 08 10	3.50 8.00 7.00	08 10	8.00 7.00
080-42	08 08 10 10	3.50 8.00 7.00 16.0	08 10 10	8.00 7.00 16.0



Spring-applied brake

Motor – brake assignment

Design	Standard	LongLife

Motor frame size	Size	Rated torque	Size	Rated torque
	Brake		Brake	
		M_k		M_k
		[Nm]		[Nm]
090-32	08 08 10 10 10	3.50 8.00 7.00 16.0 23.0	08 10 10	8.00 7.00 16.0
100-12	10 10 12 12	7.00 16.0 14.0 32.0	10 12 12	16.0 14.0 32.0
100-32	10 10 12 12 12	7.00 16.0 14.0 32.0 46.0		
112-22	12 12 14 14	14.0 32.0 35.0 60.0		
132-12	14 14 16 16	35.0 60.0 60.0 80.0		
132-22 132-32	14 14 16 16 16	35.0 60.0 60.0 80.0 100		

5.7



Spring-applied brake

Direct connection without rectifier

If the brake is activated directly without a rectifier, a freewheeling diode or a spark suppressor is required to protect against induction peaks.

- Supply voltages
  DC 24 V
  DC 180 V
  DC 205 V

Connection via mains voltage with brake rectifier

If the brake is not directly supplied with DC voltage, a rectifier is required. This is included in the scope of supply and is located in the terminal box of the motor. The rectifier converts the AC voltage of the connection into DC voltage. The following rectifiers are available:

Half-wave rectifier, 6-pole

- Ratio of supply voltage to brake coil voltage = 2.22
- Approved by UL/CSA
- Supply voltages
  AC 230 V
  AC 400 V
  AC 460 V



Bridge rectifier, 6-pole

- Ratio of supply voltage to brake coil voltage = 1.11
- Supply voltage
  AC 230 V



Bridge/half-wave rectifier, 6-pole

- Supply voltage / brake coil voltage ratio
  up to the overexcitation time = 1.11
  From the overexcitation time = 2.22
- Supply voltages
  AC 230 V
  AC 400 V





Spring-applied brake

Connection via mains voltage with brake rectifier

Bridge/half-wave rectifier, 6-pole
- Supply voltage / brake coil voltage ratio
  up to the overexcitation time = 1.11
  From the overexcitation time = 2.22
- Supply voltages
  AC 230 V
  AC 400 V



During the switching operation the bridge/half-wave rectifier functions as a bridge rectifier for the overexcitation time $t_{ü}$ and then as a half-wave rectifier. This combination optimises the performance of the brake – depending on the assignment of brake coil voltage and supply voltage:

- **Short-time overexcitation of the brake coil**
  Activating the brake coil for the overexcitation time $t_{ü}$ with twice the rated voltage allows the disengagement time to be reduced. The brake opens more quickly and wear on the friction lining is reduced.
  These features make this activation version particularly suitable for lifting applications. It is therefore only available in combination with a brake with increased braking torque.
- **Holding current reduction (cold brake)**
  By reducing the holding current, the bridge/half-wave rectifier is able to reduce the power input to the open brake. As the brake heats up less, this type of activation is known as "cold brake".



Spring-applied brake

Permissible friction energy

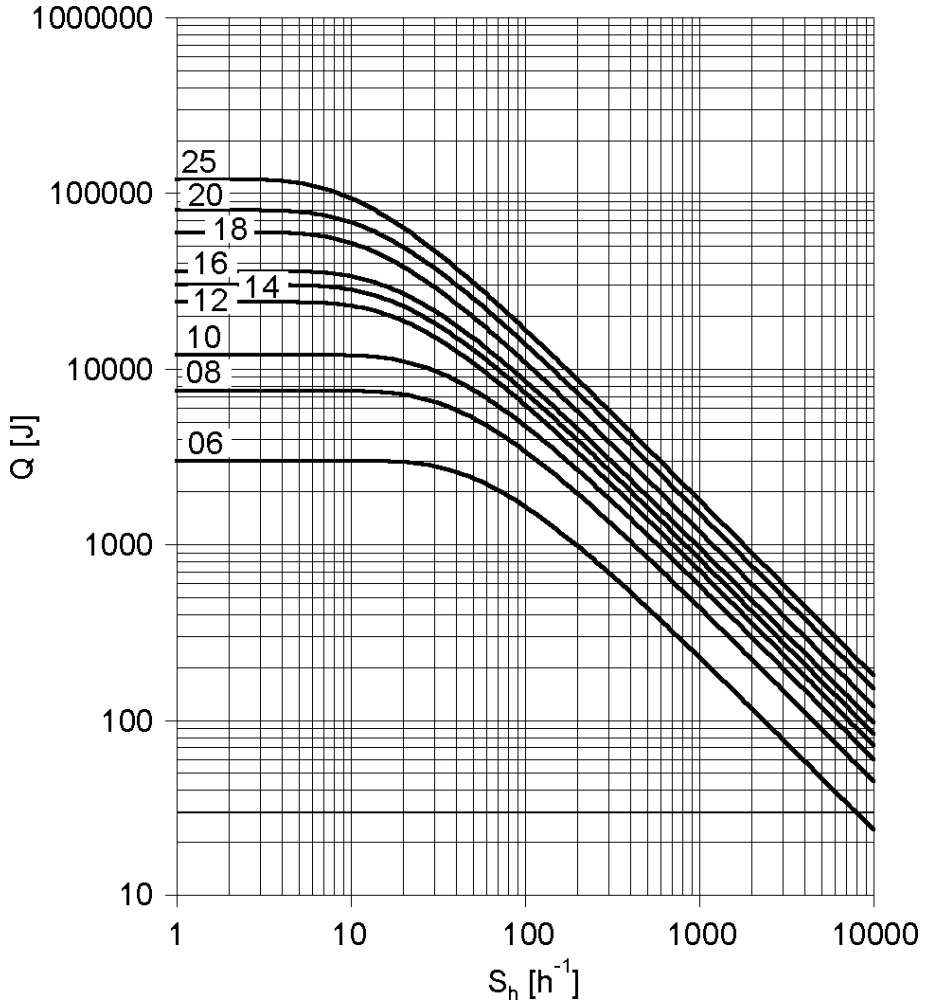

Q =Switching energy per switching cycle
S_h =Operating frequency
Brake size = 06 to 25



Spring-applied brake

Rated data with reduced braking torque

► Please enquire for braking torques and maximum switching work values not listed here.

Size			06	08	10	12	14	16	18	20	25
Power input											
	P_{in}	[kW]	0.020	0.025	0.030	0.040	0.050	0.055	0.085	0.10	0.11
Braking torque											
100	M_B	[Nm]	2.50	3.50	7.00	14.0	35.0	60.0	80.0	145	265
1000	M_B	[Nm]	2.30	3.10	6.10	12.0	30.0	50.0	65.0	115	203
1200	M_B	[Nm]	2.30	3.10	6.00	12.0	29.0	48.0	63.0	112	199
1500	M_B	[Nm]	2.20	3.00	5.80	11.0	28.0	47.0	61.0	109 [1)]	193 [1)]
1800	M_B	[Nm]	2.10	2.90	5.70	11.0	28.0	46.0	60.0 [1)]		
3000	M_B	[Nm]	2.00	2.80	5.30	10.0	26.0 [1)]	43.0 [1)]			
3600	M_B	[Nm]	2.00	2.70	5.20	10.0 [1)]					
Maximum switching energy											
100	Q_E	[KJ]	3.00	7.50	12.0	24.0	30.0	36.0	60.0	80.0	120
1000	Q_E	[KJ]	3.00	7.50	12.0	24.0	30.0	36.0	60.0	80.0	120
1200	Q_E	[KJ]	3.00	7.50	12.0	24.0	30.0	36.0	60.0	80.0	120
1500	Q_E	[KJ]	3.00	7.50	12.0	24.0	30.0	36.0	60.0	24.0 [1)]	36.0 [1)]
1800	Q_E	[KJ]	3.00	7.50	12.0	24.0	30.0	36.0	36.0 [1)]		
3000	Q_E	[KJ]	3.00	7.50	12.0	24.0	18.0 [1)]	11.0 [1)]			
3600	Q_E	[KJ]	3.00	7.50	12.0	7.00 [1)]					
Transition operating frequency											
	$S_{hü}$	[1/h]	79.0	50.0	40.0	30.0	28.0	27.0	20.0	19.0	15.0
Moment of inertia											
	J	[kgcm²]	0.015	0.061	0.20	0.45	0.63	1.50	2.90	7.30	20.0
Mass											
	m	[kg]	0.90	1.50	2.60	4.20	5.80	8.70	12.6	19.5	31.0

[1)] In the region of the load limit the value for friction energy Q_{BW} can be reduced to 40 %.



Spring-applied brake

Rated data with reduced braking torque

► Activation via half-wave or bridge rectifier

Size										
			06	08	10	12	14	16	18	20	25
Friction energy											
	Q_{BW}	[MJ]	113	210	264	706	761	966	1542	2322	3522
Delay time											
Engaging	t_{11}	[ms]	11.0	14.0	20.0	21.0	37.0	53.0	32.0	47.0	264
Rise time											
Braking torque	t_{12}	[ms]	13.0	10.0	17.0	19.0	22.0	30.0	20.0	100	120
Engagement time											
	t_1	[ms]	24.0		37.0	40.0	59.0	83.0	52.0	147	384
Disengagement time											
	t_2	[ms]	35.0	37.0	57.0	65.0	148	169	230	207	269

► Activation via bridge/half-wave rectifier

Design										
			Holding current reduction (cold brake)								
Size										
			06	08	10	12	14	16	18	20	25
Friction energy											
	Q_{BW}	[MJ]	113	210	264	706	761	966	1542	2322	3522
Overexcitation time											
	$t_{ü}$	[ms]	300				1300				
Min. rest time											
	t	[ms]	900				3900				
Delay time											
Engaging	t_{11}	[ms]	12.0	22.0	35.0	49.0	61.0	114	83.0	126	304
Rise time											
Braking torque	t_{12}	[ms]	14.0	16.0	30.0	45.0	37.0	65.0	52.0	269	138
Engagement time											
	t_1	[ms]	26.0	38.0	66.0	93.0	97.0	180	134	395	443
Disengagement time											
	t_2	[ms]	35.0	37.0	57.0	65.0	148	169	230	207	269

► The brake response and application times are guide values. The engagement time is 10 times longer with AC-side switching. With the maximum air gap the disengagement time t_2 – depending on the brake and control – is up to 4 times longer than the disengagement time with the rated air gap.



Spring-applied brake

Rated data with standard braking torque

► Please enquire for braking torques and maximum switching work values not listed here.

Size			06	08	10	12	14	16	18	20	25
Power input											
	P_{in}	[kW]	0.020	0.025	0.030	0.040	0.050	0.055	0.085	0.10	0.11
Braking torque											
100	M_B	[Nm]	4.00	8.00	16.0	32.0	60.0	80.0	150	260	400
1000	M_B	[Nm]	3.70	7.20	14.0	27.0	51.0	66.0	121	206	307
1200	M_B	[Nm]	3.60	7.00	14.0	27.0	50.0	65.0	118	201	300
1500	M_B	[Nm]	3.50	6.80	13.0	26.0	48.0	63.0	115	195 [1)]	291 [1)]
1800	M_B	[Nm]	3.40	6.70	13.0	26.0	47.0	61.0	112 [1)]		
3000	M_B	[Nm]	3.20	6.30	12.0	24.0	44.0 [1)]	57.0 [1)]			
3600	M_B	[Nm]	3.20	6.10	12.0	23.0 [1)]					
Maximum switching energy											
100	Q_E	[KJ]	3.00	7.50	12.0	24.0	30.0	36.0	60.0	80.0	120
1000	Q_E	[KJ]	3.00	7.50	12.0	24.0	30.0	36.0	60.0	80.0	120
1200	Q_E	[KJ]	3.00	7.50	12.0	24.0	30.0	36.0	60.0	80.0	120
1500	Q_E	[KJ]	3.00	7.50	12.0	24.0	30.0	36.0	60.0	24.0 [1)]	36.0 [1)]
1800	Q_E	[KJ]	3.00	7.50	12.0	24.0	30.0	36.0	36.0 [1)]		
3000	Q_E	[KJ]	3.00	7.50	12.0	24.0	18.0 [1)]	11.0 [1)]			
3600	Q_E	[KJ]	3.00	7.50	12.0	7.00 [1)]					
Transition operating frequency											
	$S_{hü}$	[1/h]	79.0	50.0	40.0	30.0	28.0	27.0	20.0	19.0	15.0
Moment of inertia											
	J	[kgcm²]	0.015	0.061	0.20	0.45	0.63	1.50	2.90	7.30	20.0
Mass											
	m	[kg]	0.90	1.50	2.60	4.20	5.80	8.70	12.6	19.5	31.0

[1)] In the region of the load limit the value for friction energy Q_{BW} can be reduced to 40 %.



Spring-applied brake

Rated data with standard braking torque

► Activation via half-wave or bridge rectifier

Size			06	08	10	12	14	16	18	20	25
Friction energy											
	Q_{BW}	[MJ]	85.0	158	264	530	571	966	1542	2322	3522
Delay time											
Engaging	t_{11}	[ms]	15.0		28.0		17.0	27.0	33.0	65.0	110
Rise time											
Braking torque	t_{12}	[ms]	13.0	16.0	19.0	25.0		30.0	45.0	100	120
Engagement time											
	t_1	[ms]	28.0	31.0	47.0	53.0	42.0	57.0	78.0	165	230
Disengagement time											
	t_2	[ms]	45.0	57.0	76.0	115	210	220	270	340	390

► Activation via bridge/half-wave rectifier

Design			Holding current reduction (cold brake)								
Size			06	08	10	12	14	16	18	20	25
Friction energy											
	Q_{BW}	[MJ]	85.0	158	264	530	571	966	1542	2322	3522
Overexcitation time											
	$t_{ü}$	[ms]	300				1300				
Min. rest time											
	t	[ms]	900				3900				
Delay time											
Engaging	t_{11}	[ms]	16.0	25.0	31.0	48.0	33.0	58.0	80.0	102	154
Rise time											
Braking torque	t_{12}	[ms]	14.0	27.0	21.0	43.0	49.0	64.0	109	157	168
Engagement time											
	t_1	[ms]	30.0	52.0		90.0	82.0	122	189	259	322
Disengagement time											
	t_2	[ms]	45.0	57.0	76.0	115	210	220	270	340	390

► The brake response and application times are guide values. The engagement time is 10 times longer with AC-side switching. With the maximum air gap the disengagement time t_2 – depending on the brake and control – is up to 4 times longer than the disengagement time with the rated air gap.



Spring-applied brake

Rated data with increased braking torque

► Please enquire for braking torques and maximum switching work values not listed here.

Size			10	12	14	16	16	18	20	20	25	25
Power input												
	P_{in}	[kW]	0.030	0.040	0.050	0.055	0.055	0.085	0.10	0.10	0.11	0.11
Braking torque												
100	M_B	[Nm]	23.0	46.0	75.0	100	125	200	315	400	490	600
1000	M_B	[Nm]	20.0	39.0	64.0	83.0	103	162	249	317	376	461
1200	M_B	[Nm]	20.0	39.0	62.0	81.0	101	158	244	309	367	449
1500	M_B	[Nm]	19.0	38.0	60.0	78.0	98.0	153	237 [1)]	300 [1)]	356 [1)]	436 [1)]
1800	M_B	[Nm]	19.0	37.0	59.0	77.0	96.0	150 [1)]				
3000	M_B	[Nm]	17.0	34.0	55.0 [1)]	71.0 [1)]	89.0 [1)]					
3600	M_B	[Nm]	17.0	33.0 [1)]								
Maximum switching energy												
100	Q_E	[KJ]	12.0	24.0	30.0	36.0	36.0	60.0	80.0	80.0	120	120
1000	Q_E	[KJ]	12.0	24.0	30.0	36.0	36.0	60.0	80.0	80.0	120	120
1200	Q_E	[KJ]	12.0	24.0	30.0	36.0	36.0	60.0	80.0	80.0	120	120
1500	Q_E	[KJ]	12.0	24.0	30.0	36.0	36.0	60.0	24.0 [1)]	24.0 [1)]	36.0 [1)]	36.0 [1)]
1800	Q_E	[KJ]	12.0	24.0	30.0	36.0	36.0	36.0 [1)]				
3000	Q_E	[KJ]	12.0	24.0	18.0 [1)]	11.0 [1)]	11.0 [1)]					
3600	Q_E	[KJ]	12.0	7.00 [1)]								
Transition operating frequency												
	$S_{hü}$	[1/h]	40.0	30.0	28.0	27.0	27.0	20.0	19.0	19.0	15.0	15.0
Moment of inertia												
	J	[kgcm²]	0.20	0.45	0.63	1.50	1.50	2.90	7.30	7.30	20.0	20.0
Mass												
	m	[kg]	2.60	4.20	5.80	8.70	8.70	12.6	19.5	19.5	31.0	31.0

5.7

[1)] In the region of the load limit the value for friction energy Q_{BW} can be reduced to 40 %.

► Activation via half-wave or bridge rectifier

Size			10	12	14	16		18	20		25	
Friction energy												
	Q_{BW}	[MJ]	198	353	253	563	241	578	1596	580	2465	1409
Delay time												
Engaging	t_{11}	[ms]	10.0	16.0	11.0	22.0	17.0	24.0	46.0	17.0	77.0	38.0
Rise time												
Braking torque	t_{12}	[ms]	19.0	25.0		30.0		45.0	100		120	
Engagement time												
	t_1	[ms]	29.0	41.0	36.0	52.0	47.0	69.0	146	117	197	158
Disengagement time												
	t_2	[ms]	109	193	308	297	435	356	378	470	451	532



Spring-applied brake

Rated data with increased braking torque

► Activation via bridge/half-wave rectifier

Design			Holding current reduction (cold brake)									
Size			10	12	14	16		18	20		25	
Friction energy												
	Q_{BW}	[MJ]	198	353	253	563	241	578	1596	580	2465	1409
Overexcitation time												
	$t_{ü}$	[ms]	300			1300						
Min. rest time												
	t	[ms]	900			3900						
Delay time												
Engaging	t_{11}	[ms]	24.0	27.0	17.0	41.0	21.0	60.0	69.0	17.0	123	85.0
Rise time												
Braking torque	t_{12}	[ms]	44.0	43.0	37.0	55.0	37.0	113	148	100	190	270
Engagement time												
	t_1	[ms]	68.0	70.0	54.0	97.0	57.0	173	217	334	313	355
Disengagement time												
	t_2	[ms]	109	193	308	297	435	356	378	470	451	532

Design			Over-excitation									
Size			10	12	14	16		18	20		25	
Friction energy												
	Q_{BW}	[MJ]	264	706	761	966		1542	2322		3522	
Overexcitation time												
	$t_{ü}$	[ms]	300			1300						
Min. rest time												
	t	[ms]	900			3900						
Delay time												
Engaging	t_{11}	[ms]	29.0	54.0	31.0	70.0	46.0	86.0	103	55.0	171	135
Rise time												
Braking torque	t_{12}	[ms]	53.0	87.0	68.0	93.0	83.0	160	222	319	266	430
Engagement time												
	t_1	[ms]	82.0	141	99.0	163	129	246	325	374	437	565
Disengagement time												
	t_2	[ms]	53.0	81.0	117	141	168	151	160	167	184	204

► The brake response and application times are guide values. The engagement time is 10 times longer with AC-side switching. With the maximum air gap the disengagement time t_2 – depending on the brake and control – is up to 4 times longer than the disengagement time with the rated air gap.



Spring-applied brake

Manual release lever

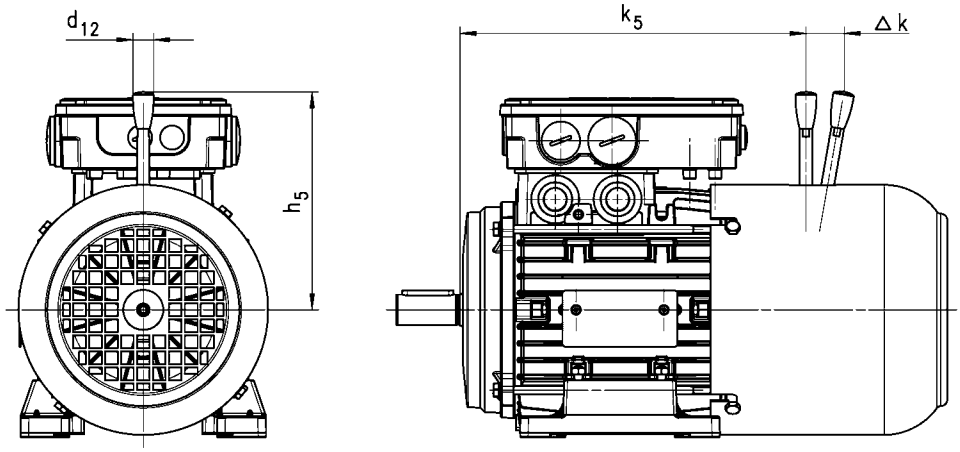

	Brake				
		k_5	Δ k	h_5	d_{12}
		[mm]	[mm]	[mm]	[mm]
063	06	178	29	107	13.0
071	06 08	205 206	29 27	107 116	13.0 13.0
080	08 10	224 239	27 28	116 132	13.0 13.0
090	08 10	264 277	27 28	116 132	13.0 13.0
100	10 12	305 307	28 37	132 161	13.0 13.0
112	12 14	320 323	37 41	161 195	13.0 24.0
132	14 16	400 406	41 55	195 240	24.0 24.0

The following combinations with manual release lever and motor connection in the same position are not possible:
- HAN connector with connection in position 1
- Inverter motec
- Terminal box of motor sizes 071, 080, 090 for brake and retracting (M□□MA BR/BS/BA/BI)



Resolver

Stator-fed resolver with two stator windings offset by 90° and one rotor winding with transformer winding.

► The three-phase AC motors with resolver cannot be used for speed-dependent safety functions in connection with the SM 301 safety module.

Product key				
				RS1
Accuracy				
			[']	-10 ... 10
Absolute positioning				
				1 revolution
Max. input voltage				
DC	$U_{in,max}$		[V]	10.0
Max. input frequency				
	$f_{in,max}$		[kHz]	4.00
Ratio				
Stator / rotor		± 5 %		0.30
Rotor impedance				
	Z_{ro}		[Ω]	51 + j90
Stator impedance				
	Z_{so}		[Ω]	102 + j150
Impedance				
	Z_{rs}		[Ω]	44 + j76
Min. insulation resistance				
At DC 500 V	R		[MΩ]	10.0
Number of pole pairs				
				1



Incremental encoder and SinCos absolute value encoder

► The three-phase AC motors with incremental encoders or SinCos absolute value encoders cannot be used for speed-dependent safety functions in connection with the SM 301 safety module.

Encoder type			HTL incremental				TTL incremental			SinCos absolute value
Product key			IG128-24V-H	IG512-24V-H	IG1024-24V-H	IG2048-24V-H	IG512-5V-T	IG1024-5V-T	IG2048-5V-T	AM1024-8V-H
Encoder type										Multi-turn
Pulses			128	512	1024	2048	512	1024	2048	1024
Output signals			HTL				TTL			1 Vss
Interfaces			A, B track	A, B, N track and inverted						Hiperface
Absolute revolutions			0							4096
Accuracy		[']	-22.5 ... 22.5	-2 ... 2						-0.8 ... 0.8
Min. input voltage										
DC	$U_{in,min}$	[V]	8.00				4.75			7.00
Max. input voltage										
DC	$U_{in,max}$	[V]	26.0	30.0			5.25			12.0
Max. current consumption										
	I_{max}	[A]	0.040	0.15						0.080
Limit frequency										
	f_{max}	[kHz]	30.0	160			300			200
Inverter assignment			E84AVSC E84AVHC	E84AVHC			E84AVTC E94A ECS EVS93			

Inverters
- Inverter Drives 8400 StateLine (E84AVSC)
- Inverter Drives 8400 HighLine (E84AVHC)
- Inverter Drives 8400 TopLine (E84AVTC)

Servo-Inverters
- Servo Drives 9400 (E94A)
- 9300 servo inverters (EVS93)
- Servo Drives ECS



Blower

► The blower terminal box is available in positions 2, 3 or 5.

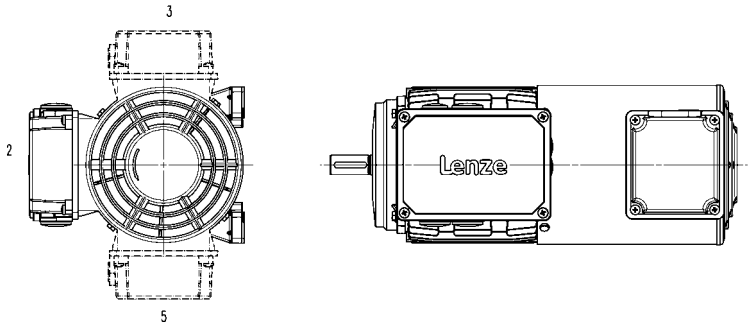

Rated data for 50 Hz

Size	Number of phases	Connection method					
Motor							
			U_{min}	U_{max}	P_{max}	I_{max}	m
			[V]	[V]	[kW]	[A]	[kg]
063	1		230	277	0.027	0.11	2.00
	3	Δ	200	303	0.028	0.12	
		Y	346	525		0.070	
071	1		230	277	0.027	0.10	2.10
	3	Δ	200	303	0.031	0.11	
		Y	346	525		0.060	
080	1		230	277	0.029	0.11	2.30
	3	Δ	200	303	0.031		
		Y	346	525		0.060	
090	1		220	277	0.065	0.29	2.70
	3	Δ	200	303	0.091	0.38	
		Y	346	525		0.22	
100	1		220	277	0.066	0.28	3.00
	3	Δ	200	303	0.091	0.37	
		Y	346	525		0.22	
112	1		220	277	0.071	0.28	3.10
	3	Δ	200	303	0.097	0.35	
		Y	346	525		0.20	
132	1		230	277	0.098	0.40	4.20
	3	Δ	200	303	0.12	0.58	
		Y	346	525		0.33	
160	1		230	277	0.25	0.97	6.20
	3	Δ	200	303		0.87	
		Y	346	525		0.50	
180	1		230	277		0.97	8.00
	3	Δ	200	303		0.87	
		Y	346	525		0.50	

5.7



Blower

Rated data for 50 Hz

Size	Number of phases	Connection method					
Motor							
			U_{min}	U_{max}	P_{max}	I_{max}	m
			[V]	[V]	[kW]	[A]	[kg]
200	1		230	277	0.25	0.97	8.00
	3	Δ	200	303		0.87	
		Y	346	525		0.50	
225		Δ	200	400	0.28	1.10	15.0
		Y	346	525	0.17	0.35	

Rated data for 60 Hz

Size	Number of phases	Connection method					
Motor							
			U_{min}	U_{max}	P_{max}	I_{max}	m
			[V]	[V]	[kW]	[A]	[kg]
063	1		230	277	0.032	0.12	2.00
	3	Δ	220	332	0.028	0.10	
		Y	380	575		0.060	
071	1		230	277	0.033	0.12	2.10
	3	Δ	220	332	0.029	0.10	
		Y	380	575		0.060	
080	1		230	277	0.037	0.14	2.30
	3	Δ	220	332	0.034	0.10	
		Y	380	575		0.060	
090	1		220	277	0.065	0.25	2.70
	3	Δ		332	0.077	0.33	
		Y	380	575		0.19	
100	1		220	277	0.075	0.30	3.00
	3	Δ		332	0.087	0.31	
		Y	380	575		0.18	
112	1		220	277	0.094	0.37	3.10
	3	Δ		332	0.10	0.31	
		Y	380	575		0.18	
132	1		230	277	0.15	0.57	4.20
	3	Δ	220	332		0.44	
		Y	380	575		0.25	
160		Δ	220	332	0.36	0.93	6.20
		Y	380	575		0.56	
180		Δ	220	332		0.93	8.00
		Y	380	575		0.56	
200		Δ	220	332		0.93	
		Y	380	575		0.56	
225		Δ	220	400	0.28	0.76	15.0
		Y	380	575	0.26	0.43	



Temperature monitoring

► The thermal sensors are integrated in the windings. The use of an additional motor protection switch is recommended.

TKO thermal contacts

Function	Operating temperature	Min. reset temperature	Max. reset temperature	Max. input current	Max. input voltage
					AC
	T	T_{min}	T_{max}	$I_{in,max}$	$U_{in,max}$
	-5 ... 5				
	[°C]	[°C]	[°C]	[A]	[V]
NC contact	150	90.0	135	2.50	250

PTC thermistor

Function	Operating temperature	Rated resistance			Standard
		155 °C	-20 °C	140 °C	
	T	R_N	R_N	R_N	
	-5 ... 5				
	[°C]	[Ω]	[Ω]	[Ω]	
Sudden change in resistance	150	550	30.0	250	DIN 44080 DIN VDE 0660 Part 303



Temperature monitoring

KTY temperature sensor

	Function	Rated resistance			Max. input current	
		25 °C	150 °C	170 °C	25 °C	170 °C
		R_N	R_N	R_N	$I_{in,max}$	$I_{in,max}$
		[Ω]	[Ω]	[Ω]	[A]	[A]
KTY83-110	Continuous resistance change	1000	2225	2471	0.010	0.002
KTY84-130	Continuous resistance change	603	1334	1482	0.010	0.002

Variation of resistance

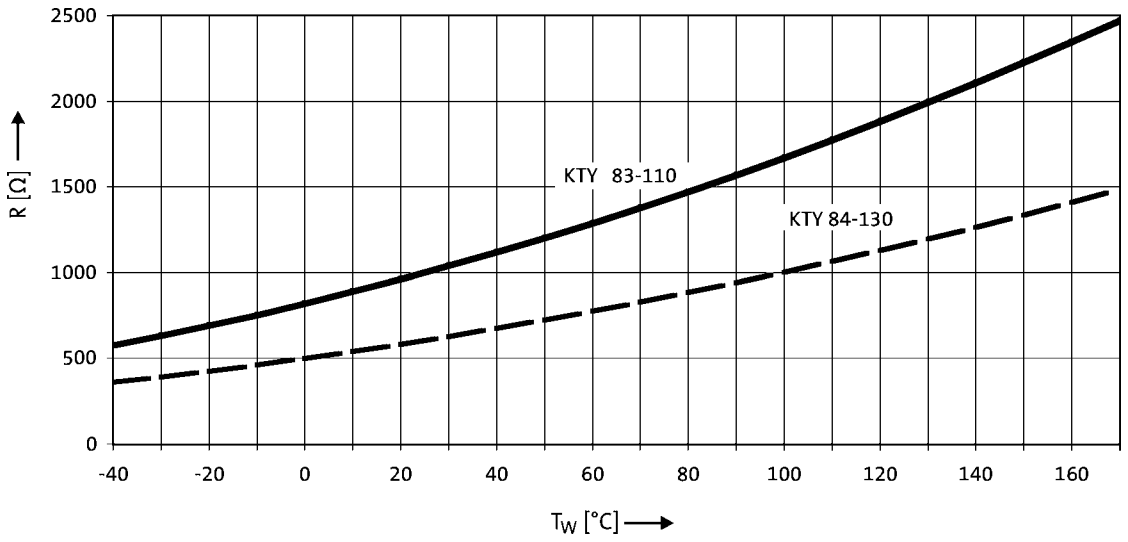

► If the thermal sensor is supplied with a measurement current of 1 mA, the above relationship between the temperature and the resistance applies.

5.7



Terminal box

In the standard version, the motors are connected in the terminal box. As an option, the motors are also available with the connectors described on the following pages as long as the permissible ratings are not exceeded.

Connections

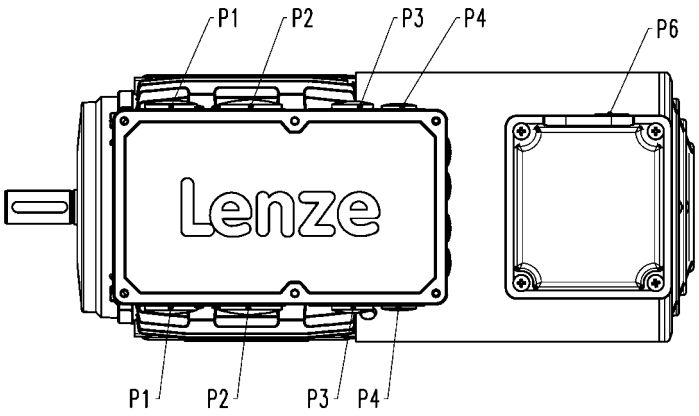

Motor type		
Built-on accessories	M□□MAXX M□□MABR M□□MARS M□□MAIG M□□MAAG	M□□MABS M□□MABI M□□MABA

	P_1	P_2	P_3	P_4	P_6	P_1	P_2	P_3	P_4	P_6
	[mm]	[mm]	[mm]	[mm]	[mm]	[mm]	[mm]	[mm]	[mm]	[mm]
063	M16x1.5	M20x1.5			M16x1.5	M25x1.5	M32x1.5	M20x1.5	M16x1.5	M16x1.5
071										
080	M20x1.5	M25x1.5								
090										
100										
112										
132	M25x1.5	M32x1.5	M20x1.5	M16x1.5						

[1] The cable glands P1 to P4 are only arranged at the bottom.



Plug connectors

ICN, HAN and M12 connectors (only for IG128-24V-H incremental encoder) are available for the three-phase AC motors.

ICN connector

A connector is used for the power connection, connection of the brake, and the temperature monitoring connection.
The feedback and blower connections are implemented via a separate connector in each case.

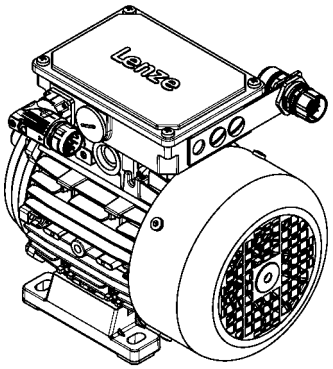

Connection for power, brake and temperature monitoring

The connectors can be rotated by 270° and are equipped with a bayonet catch for SpeedTec connectors. As the connector fixing is also compatible with conventional box nuts, existing mating connectors can still be used without difficulty. The motor connection is determined in the terminal box.

► ICN 6-pole

No connection of temperature monitoring possible!

Pin assignment			
Contact	Designation	Meaning	
1	BD1 / BA1	Brake +/AC	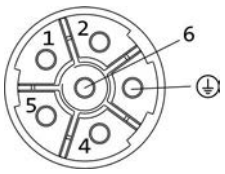
2	BD2 / BA2	Brake -/AC	
PE	PE	PE conductor	
4	U	Phase U power	
5	V	Phase V power	
6	W	Phase W power	

► ICN 8-pole

Pin assignment			
Contact	Designation	Meaning	
1	U	Phase U power	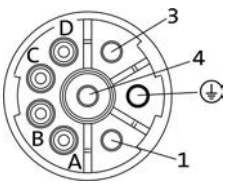
PE	PE	PE conductor	
3	W	Phase W power	
4	V	Phase V power	
A	TB1 / TP1 / R1	Thermal sensor: TKO/PTC/ +KTY	
B	TB2 / TP2 / R2	Thermal sensor: TKO/PTC/-KTY	
C	BD1 / BA1	Brake +/AC	
D	BD2 / BA2	Brake -/AC	



ICN connector

Feedback connection

All encoder systems (apart from IG128-24V-H) are also available with an ICN connector fixed to the motor terminal box for exceptionally fast commissioning. The connectors are fitted with a bayonet fixing, which is also compatible with conventional union nuts. Existing mating connectors can therefore continue to be used without difficulty.

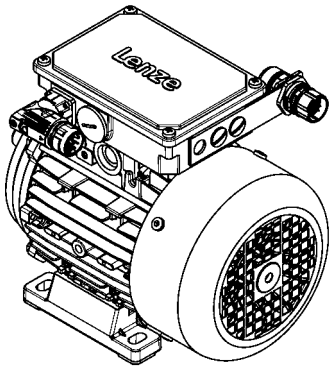

► Resolver

Pin assignment			
Contact	Designation	Meaning	
1	+Ref	Transformer windings	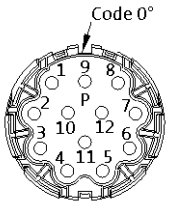
2	-Ref		
3	+VCC ETS	Supply: Electronic nameplate	
4	+COS	Cosine stator windings	
5	-COS		
6	+SIN	Sine stator windings	
7	-SIN		
8		Not assigned	
9			
10			
11	+KTY	KTY temperature sensor	
12	-KTY		

► Hiperface incremental encoder and SinCos absolute value encoder

Pin assignment			
Contact	Designation	Meaning	
1	B	Track B/+SIN	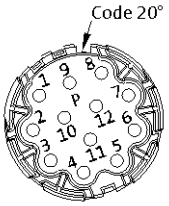
2	A^-	Track A inverse/-COS	
3	A	Track A/+COS	
4	$+U_B$	Supply +	
5	GND	Mass	
6	Z^-	Zero track inverse/-RS485	
7	Z	Zero track/+RS485	
8		Not assigned	
9	B^-	Track B inverse/-SIN	
10		Not assigned	
11	+KTY	KTY temperature sensor	
12	-KTY		



ICN connector

Dimensions of the connectors on the terminal box

The following connector positions are possible:
- power connection (A) in position 5 and feedback connection (B) in position 3
- power connection (A) in position 3 and feedback connection (B) in position 5

With the following motors, the feedback connection (B) is only available in position 3 or 5:
- motor frame size 132 to 180

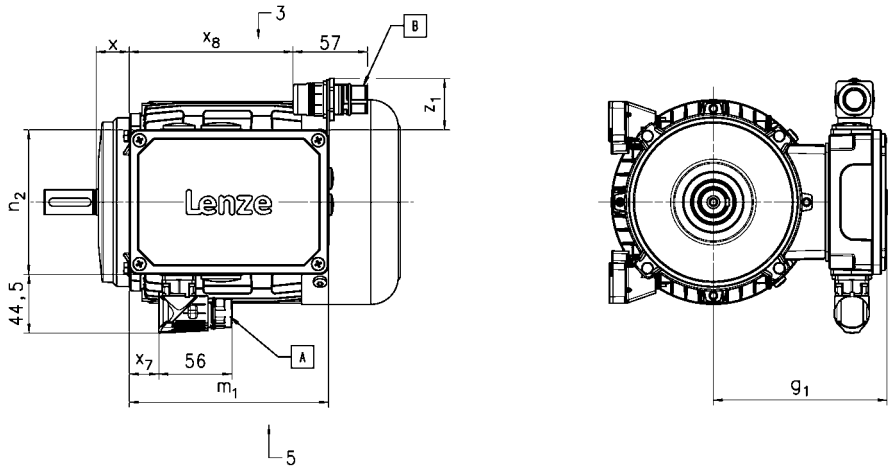

Motor type	M□□MAXX M□□MARS M□□MAIG M□□MAAG	M□□MABR M□□MABS M□□MABI M□□MABA

	g_1	x	m_1	n_2	x_7	x_8	$z_{1, max}$
	[mm]	[mm]	[mm]	[mm]	[mm]	[mm]	[mm]
063	109	17	136	103	16	109	43
071	118	24					
080	132	25	152	121	23	125	41
090	137	29					
100	147	36					
112	158	38					
132	187	51	194	125	27	166	71
160	220	69	253	152		200	65
180	239	75					
200		77					
225	348	68	354	204		328	51



ICN connector

Blower connection

The blower is also optionally available with an ICN connector fixed to the terminal box of the blower for exceptionally fast commissioning. The connectors are fitted with a bayonet fixing, which is also compatible with conventional union nuts. Existing counter plugs can therefore continue to be used without difficulty.

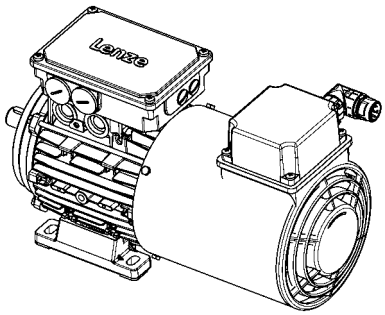

► Blower 1-ph

Pin assignment			
Contact	Designation	Meaning	
PE	PE	PE conductor	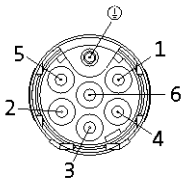
1	U1	Fan	
2	U2		
3		Not assigned	
4			
5			
6			

► Blower 3-ph

Pin assignment			
Contact	Designation	Meaning	
PE	PE	PE conductor	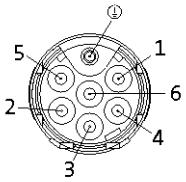
1	U	Phase U power	
2		Not assigned	
3	V	Phase V power	
4		Not assigned	
5			
6	W	Phase W power	



ICN connector

Blower connection

- The blower terminal box is available in positions 2, 3 or 5.
- In addition, the cover of the blower terminal box (including connectors) can be rotated progressively through 90° if necessary.

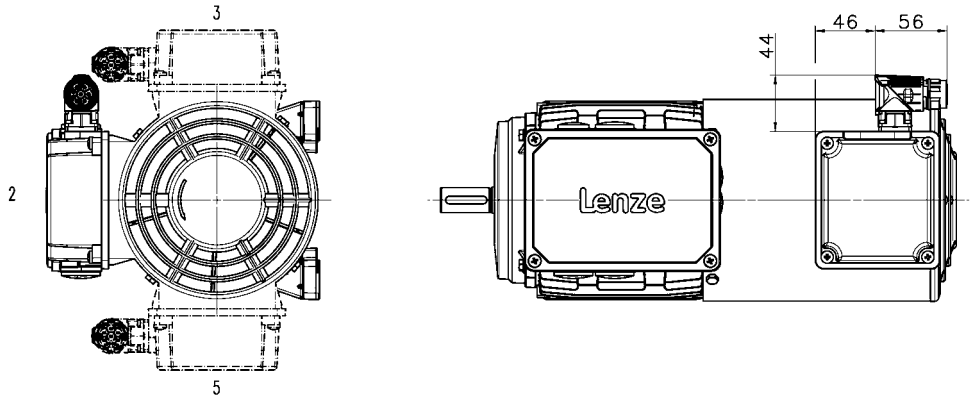



M12 connector

IG128-24V-H incremental encoder connection

As a standard this incremental encoder is equipped with a connection cable of about 0.5 m length and with a common industry standard M12 connector at its end.

Pin assignment			
Contact	Designation	Meaning	
1	$+U_B$	Supply +	
2	B	Track B	
3	GND	Mass	
4	A	Track A	



HAN connector

10E

In the case of the rectangular HAN-10E connectors, all six ends of the three winding phases are taken out to the power contacts. The motor circuit is therefore determined in the mating connector.

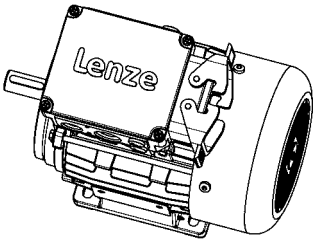

Pin assignment	
Contact	Meaning
1	Terminal board: U1
2	Terminal board: V1
3	Terminal board: W1
4	Brake +/AC
5	Brake -/AC
6	Terminal board: W2
7	Terminal board: U2
8	Terminal board: V2
9	Thermal sensor: +KTY/PTC/TKO
10	Thermal sensor: KTY/PTC/TKO

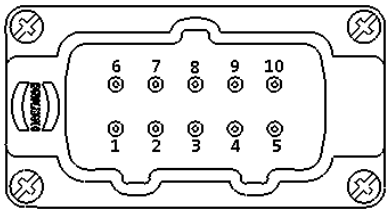



HAN connector

HAN modular

The connector is available with two different power modules (16 A or 40 A), depending on the rated motor current. The motor connection is determined in the terminal box and must be checked before commissioning.

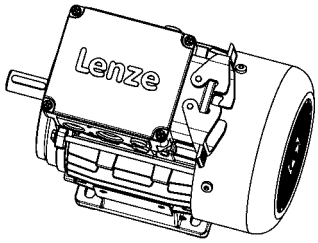

► HAN modular 16 A

Pin assignment			
Module	Contact	Meaning	
A	1	Terminal board: U1	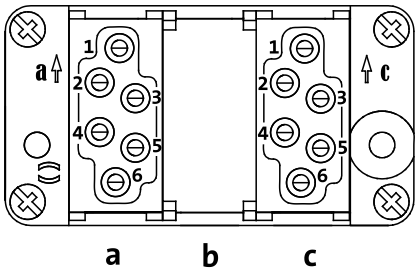
	2	Terminal board: V1	
	3	Terminal board: W1	
B		Dummy module	
C	1	Thermal sensor: +KTY/PTC/TKO	
	2	Brake +/AC	
	3	Brake -/AC	
	4	Rectifier: Switching contact	
	5		
	6	Thermal sensor: KTY/PTC/TKO	

► HAN modular 40 A

Pin assignment			
Module	Contact	Meaning	
A	1	Terminal board: U1	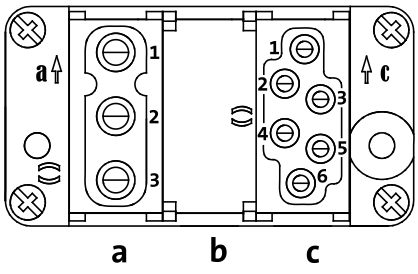
	2	Terminal board: V1	
	3	Terminal board: W1	
B		Dummy module	
C	1	Thermal sensor: +KTY/PTC/TKO	
	2	Brake +/AC	
	3	Brake -/AC	
	4	Rectifier: Switching contact	
	5		
	6	Thermal sensor: KTY/PTC/TKO	



HAN connector

► The connection position for the connector is shown in position 1. Positions 3 and 5 are also possible.

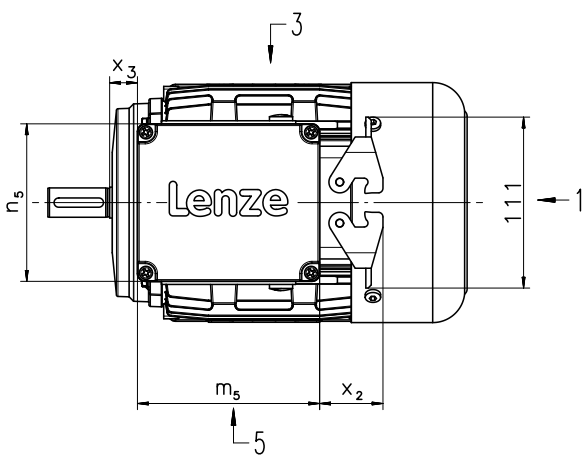

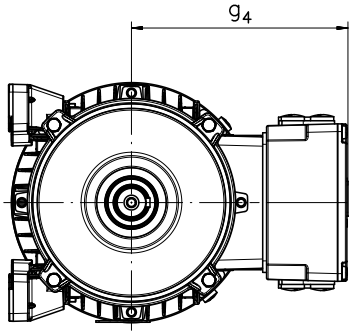

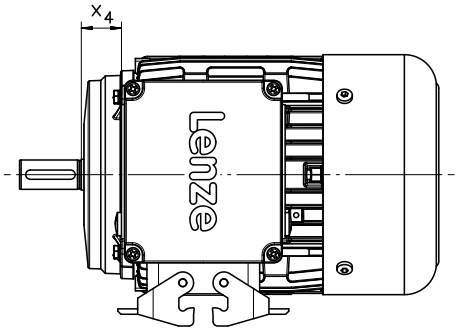

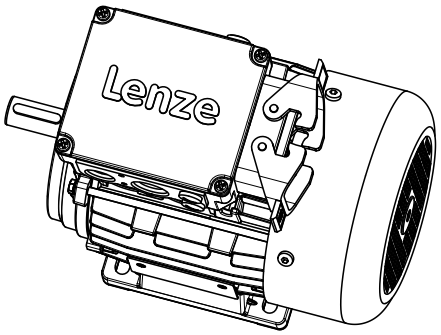

Motor type	M□□MAXX M□□MABR					
	g_4	m_5	n_5	x_2	x_3	x_4
	[mm]	[mm]	[mm]	[mm]	[mm]	[mm]
063	120	118	102	41	11	12
071	129				16	17
080	138				18	26
090	143				22	30
100	154				29	37
112	164				28	36
132 [1)]	233	120	180	47	48	18
160	248				72	42

[1)] In the case of the B5 design motors, it is not possible to connect the connector at position 3 or 5.





IE2 MH three-phase AC motors

0.75 to 45 kW

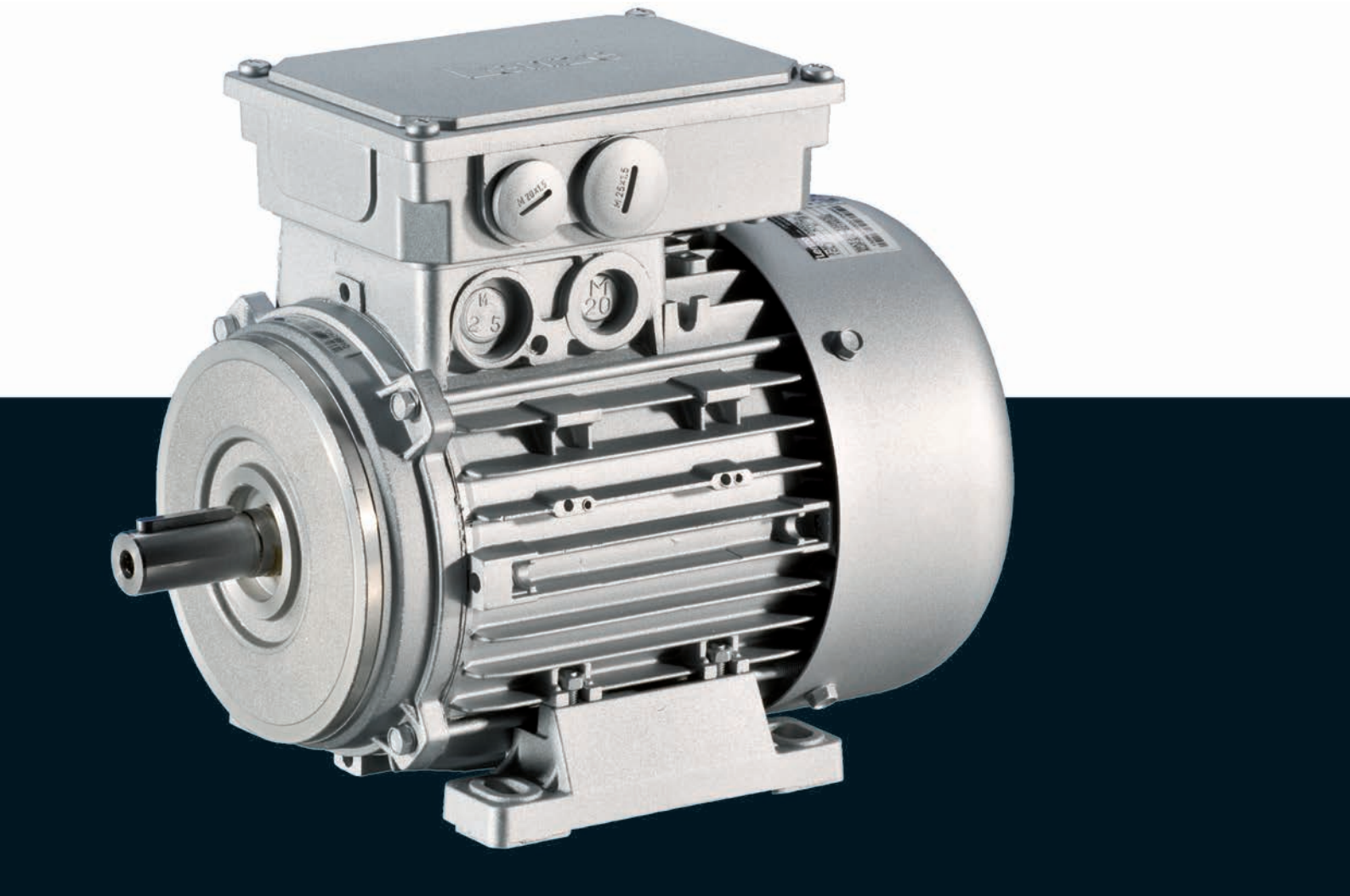

IE2 MH three-phase AC motors

Contents



General information	List of abbreviations	5.8 - 4
	Product key	5.8 - 5
	Product information	5.8 - 6
	Functions and features	5.8 - 7
	Motor – inverter assignment	5.8 - 11
	Dimensioning	5.8 - 13
Technical data	Standards and operating conditions	5.8 - 15
	Permissible radial and axial forces	5.8 - 16
	Rated data for 50 Hz	5.8 - 18
	Rated data for 60 Hz	5.8 - 19
	Rated data for 87 Hz	5.8 - 20
	Dimensions, self-ventilated (4-pole)	5.8 - 22
	Dimensions, forced ventilated (4-pole)	5.8 - 28
	Dimensions, 8400 motec inverter	5.8 - 34
Accessories	Spring-applied brake	5.8 - 37
	Resolver	5.8 - 49
	Incremental encoder and SinCos absolute value encoder	5.8 - 50
	Blower	5.8 - 51
	Temperature monitoring	5.8 - 53
	Terminal box	5.8 - 55
	Plug connectors	5.8 - 56
	ICN connector	5.8 - 56
	M12 connector	5.8 - 61
	HAN connector	5.8 - 62



List of abbreviations

$\eta_{100\,\%}$	[%]	Efficiency
$\eta_{75\,\%}$	[%]	Efficiency
$\eta_{50\,\%}$	[%]	Efficiency
cos ϕ		Power factor
I_N	[A]	Rated current
I_{max}	[A]	Max. current consumption
J	[kgcm²]	Moment of inertia
m	[kg]	Mass
M_a	[Nm]	Starting torque
M_b	[Nm]	Stalling torque
M_{max}	[Nm]	Max. torque
M_N	[Nm]	Rated torque
n_N	[r/min]	Rated speed
P_N	[kW]	Rated power
P_{max}	[kW]	Max. power input

U_{max}	[V]	Max. mains voltage
U_{min}	[V]	Min. mains voltage
$U_{N,\Delta}$	[V]	Rated voltage
$U_{N,Y}$	[V]	Rated voltage

CE	Communauté Européenne
CSA	Canadian Standards Association
DIN	Deutsches Institut für Normung e.V.
EMC	Electromagnetic compatibility
EN	European standard
IEC	International Electrotechnical Commission
IM	International Mounting Code
IP	International Protection Code
NEMA	National Electrical Manufacturers Association
UL	Underwriters Laboratory Listed Product
UR	Underwriters Laboratory Recognized Product
VDE	Verband deutscher Elektrotechniker (Association of German Electrical Engineers)
CCC	China Compulsory Certificate
EAC	Customs union Russia / Belarus / Kazakhstan certificate
cURus	Combined certification marks of UL for the USA and Canada
UkrSEPRO	Certificate for Ukraine



Product key

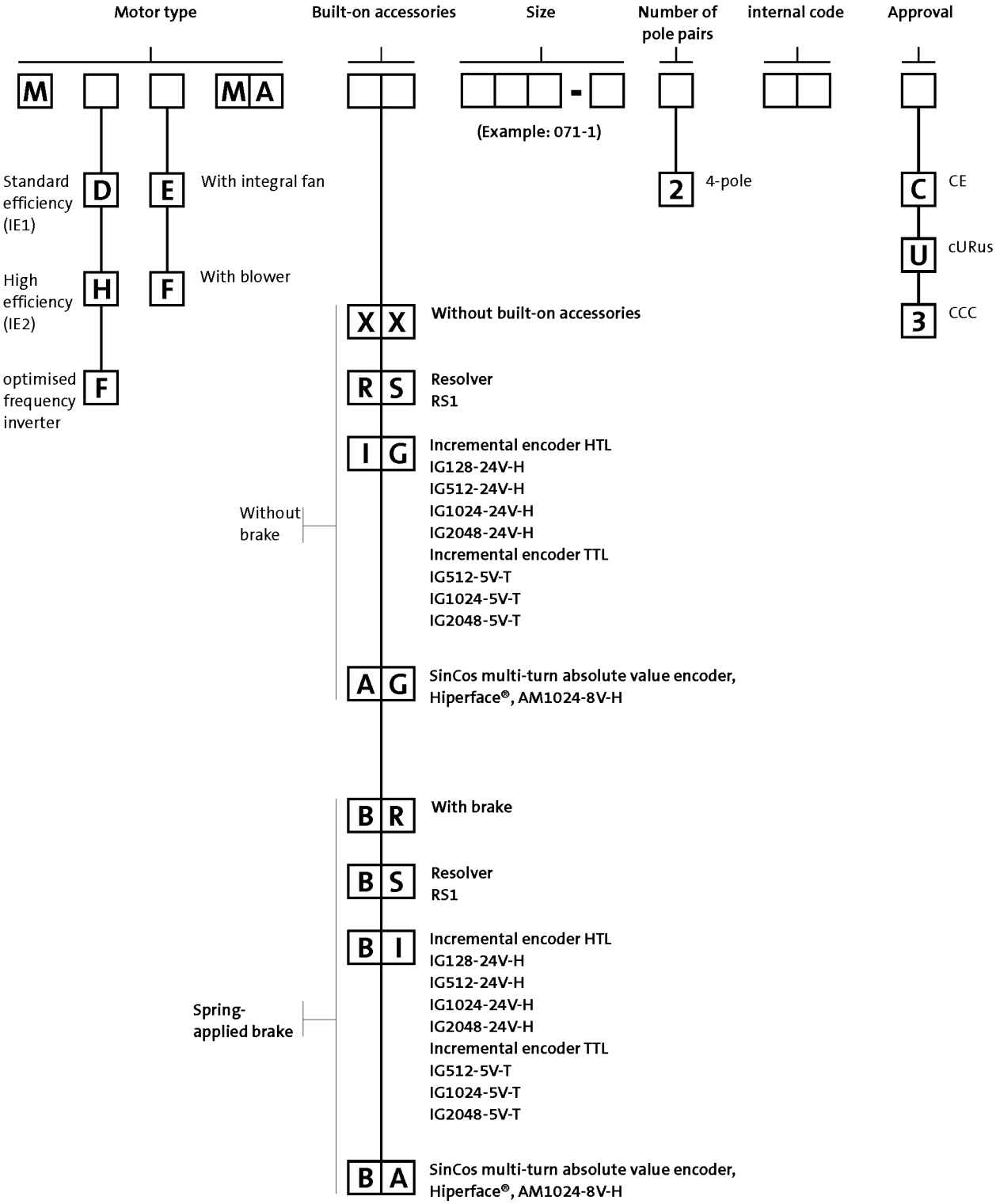
Motor type
Built-on accessories
Size
Number of pole pairs
internal code
Approval
M
MA
(Example: 071-1)
Standard efficiency (IE1)
D
E
With integral fan
High efficiency (IE2)
H
F
With blower
optimised frequency inverter
F
2
4-pole
C
CE
U
cURus
3
CCC
X X
Without built-on accessories
R S
Resolver
RS1
I G
Incremental encoder HTL
IG128-24V-H
IG512-24V-H
IG1024-24V-H
IG2048-24V-H
Incremental encoder TTL
IG512-5V-T
IG1024-5V-T
IG2048-5V-T
Without brake
A G
SinCos multi-turn absolute value encoder, Hiperface®, AM1024-8V-H
B R
With brake
B S
Resolver
RS1
B I
Incremental encoder HTL
IG128-24V-H
IG512-24V-H
IG1024-24V-H
IG2048-24V-H
Incremental encoder TTL
IG512-5V-T
IG1024-5V-T
IG2048-5V-T
Spring-applied brake
B A
SinCos multi-turn absolute value encoder, Hiperface®, AM1024-8V-H



Product information

For a long time now, three-phase AC motors from Lenze have been established in virtually all industrial sectors. Based on our many years of experience in the field of drive and automation technology, we have developed motors, which will ensure that your demands in terms of productivity, quality and availability are perfectly met.
Three-phase AC motors from the L-force series are primarily characterised by their comprehensive modularity. The wide variety of options allows you to precisely adjust the drive characteristics in line with your application. We call this Rightsizing.

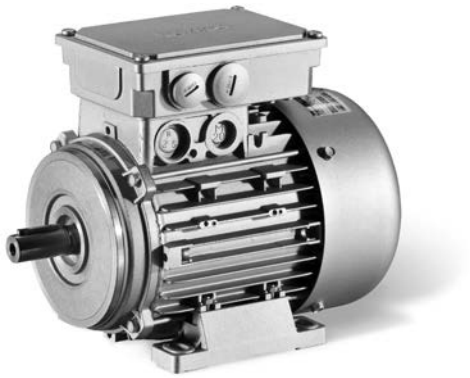

L-force MH three-phase AC motors are available in a power range from 0.75 to 45 kW and comply with efficiency class IE2 (high efficiency) as per IEC 60034-30.
Since almost all IE2 motors are designed with the same dimensions as the standard efficiency motors, it is easy to switch between the two.
The energy efficiency of the L-force MH three-phase AC motors has been approved by Underwriters Laboratories (UL) as an independent third-party.

Basic versions
- The motors feature B3, B5 and B14 designs and dimensions standardised in line with IEC 60072-1 and/or DIN EN 50347 which makes then suitable for universal use.
- The thermal sensors integrated as standard allow for permanent temperature monitoring and are coordinated to the motor winding's temperature class F (155 °C).
- The motors of the basic version are adapted to ambient conditions by IP55 degree of protection .
- In tough operating conditions, the surface and corrosion protection system is provided to reliably protect the motor from aggresive media.

Options
- Various brake sizes – each available with several braking torques – can be combined with the three-phase AC motors.
- The LongLife version of the brake can easily reach 10 x 10^6 switching cycles.
- A resolver and various incremental and absolute value encoders can be fitted for speed and position detection.
- For fast commissioning, the motors are also available with connectors for the power connection, brake, blower and feedback.
- Instead of an integral fan, the motor can optionally be equipped with a blower. No torque reduction is then necessary, even at speeds below 20 Hz.
- For drive tasks in decentralised applications, the motor can be ordered with the motec inverter connected to the terminal box.
- The motors are available with cURus, GOST-R, CCC and UkrSepro approval.



Functions and features

Size				
Motor		080	090	100
Design				
		B3 B5 B14		
Shaft journal				
d x l	[mm]	19 x 40	24 x 50	28 x 60
Spring-applied brake				
Design		Standard or LongLife design Reduced, standard or increased braking torque With rectifier With manual release lever Low noise		
Feedback				
Design		Resolver Incremental encoder Absolute value encoder (multi-turn)		
Temperature sensor				
Thermal contact		TKO		
Thermal detector		KTY83-110 KTY84-130		
PTC thermistor		PTC		
Motor connection				
Power connection		Terminal box ICN connector HAN10E connector HAN modular connector		
Brake connection		Terminal box ICN connector HAN modular connector HAN10E connector		
Blower connection		Terminal box ICN connector		
Feedback connection		Terminal box ICN connector		
Temperature sensor connection		Terminal box TKO or PTC at connector in the power connection KTY at connector in the feedback connection		
Shaft bearings				
Position of the locating bearing		Standard motors (B3, B5, B14): side B Motors for gearbox direct mounting: side A		
Bearing type		Deep-groove ball bearing with high-temperature resistant grease, 2 sealing discs or cover plates		
Colour				
		Not coated Primed Paint in various corrosion-protection designs in accordance with RAL colours		



Functions and features

Size				
Motor		112	132	160
Design				
		B3 B5 B14	B3 B5	
Shaft journal				
d x l	[mm]	28 x 60	38 x 80	42 x 110
Spring-applied brake				
Design		Standard design Reduced, standard or increased braking torque With rectifier With manual release lever Low noise		
Feedback				
Design		Resolver Incremental encoder Absolute value encoder (multi-turn)		
Temperature sensor				
Thermal contact		TKO		
Thermal detector		KTY83-110 KTY84-130		
PTC thermistor		PTC		
Motor connection				
Power connection		Terminal box ICN connector HAN10E connector HAN modular connector	Terminal box ICN connector HAN modular connector	Terminal box HAN modular connector
Brake connection		Terminal box ICN connector HAN modular connector HAN10E connector	Terminal box ICN connector HAN modular connector	Terminal box HAN modular connector
Blower connection		Terminal box ICN connector		
Feedback connection		Terminal box ICN connector		
Temperature sensor connection		Terminal box TKO or PTC at connector in the power connection KTY at connector in the feedback connection		
Shaft bearings				
Position of the locating bearing		Standard motors (B3, B5, B14): side B Motors for gearbox direct mounting: side A		
Bearing type		Deep-groove ball bearing with high-temperature resistant grease, 2 sealing discs or cover plates		
Colour				
		Not coated Primed Paint in various corrosion-protection designs in accordance with RAL colours		



Functions and features

Size				
Motor		180	200	225
Design				
		B3 B5		
Shaft journal				
d x l	[mm]	48 x 110	55 x 110	60 x 140
Spring-applied brake				
Design		Standard design Reduced, standard or increased braking torque With rectifier With manual release lever Low noise		
Feedback				
Design		Resolver Incremental encoder Absolute value encoder (multi-turn)		
Temperature sensor				
Thermal contact		TKO		
Thermal detector		KTY83-110 KTY84-130		
PTC thermistor		PTC		
Motor connection				
Power connection		Terminal box		
Brake connection		Terminal box		
Blower connection		Terminal box ICN connector		
Feedback connection		Terminal box ICN connector		
Temperature sensor connection		Terminal box		
Shaft bearings				
Position of the locating bearing		Standard motors (B3, B5, B14): side B Motors for gearbox direct mounting: side A		Drive end
Bearing type		Deep-groove ball bearing with high-temperature resistant grease, 2 sealing discs or cover plates		
Colour				
		Not coated Primed Paint in various corrosion-protection designs in accordance with RAL colours		



Functions and features

Surface and corrosion protection

For optimum protection of three-phase AC motors against ambient conditions, the surface and corrosion protection system (OKS) offers tailor-made solutions.

Various surface coatings ensure that the motors operate reliably even at high air humidity, in outdoor installation or in the presence of atmospheric impurities. Any colour from the RAL Classic collection can be chosen for the top coat. The three-phase AC motors are also available unpainted (no surface and corrosion protection).

Surface and corrosion protection system	Applications	Measures
OKS-G (primed)	• Dependent on subsequent top coat applied	• 2K PUR priming coat (grey)
OKS-S (small)	• Standard applications • Internal installation in heated buildings • Air humidity up to 90%	• Surface coating corresponding to corrosivity category C1 (subject to EN 12944-2)
OKS-M (medium)	• Internal installation in non-heated buildings • Covered, protected external installation • Air humidity up to 95%	• Surface coating corresponding to corrosivity category C2 (subject to EN 12944-2)
OKS-L (high) OKS-XL (extra Large)	• External installation • Air humidity above 95% • Chemical industry plants • Food industry	• Surface coating corresponding to corrosivity category C3 (subject to EN 12944-2) • Blower cover and B end shield additionally primed • Screws zinc-coated • Cable glands with gaskets • Corrosion-resistant brake with cover ring, stainless friction plate, and chrome-plated armature plate (on request) Optional measures: • Motor recesses sealed off (on request)

Structure of surface coating

Surface and corrosion protection system	Corrosivity category	Surface coating	Colour
	DIN EN ISO 12944-2	Structure	
Without OKS (uncoated)			
OKS-G (primed)		2K PUR priming coat	
OKS-S (small)	Comparable to C1	2K-PUR top coat	Standard: RAL 7012 Optional: RAL Classic
OKS-M (medium)	Comparable to C2	2K PUR priming coat 2K-PUR top coat	
OKS-L (high) OKS-XL (extra Large)	Comparable to C3		



Motor – inverter assignment

Rated frequency 50/60 Hz

- Decentralised inverter 8400 motec (E84DVB)
- Inverter Drives 8400 (E84AV)

Rated power	Product key		
	Motor	Inverter	
P_N			
[kW]			
0.75	MH□□□□□080-32	E84DVB□7514S□□□2□	E84AV□□□7514□□0
1.10	MH□□□□□090-12	E84DVB□1124S□□□2□	E84AV□□□1124□□0
1.50	MH□□□□□090-32	E84DVB□1524S□□□2□	E84AV□□□1524□□0
2.20	MH□□□□□100-12	E84DVB□2224S□□□2□	E84AV□□□2224□□0
3.00	MH□□□□□100-32	E84DVB□3024S□□□2□	E84AV□□□3024□□0
4.00	MH□□□□□112-22	E84DVB□4024S□□□2□	E84AV□□□4024□□0
5.50	MH□□□□□132-12	E84DVB□5524S□□□2□	E84AV□□□5524□□0
7.50	MH□□□□□132-22	E84DVB□7524S□□□2□	E84AV□□□7524□□0
11.0	MH□□□□□160-22		E84AV□□□1134□□0
15.0	MH□□□□□160-32		E84AV□□□1534□□0
18.5	MH□□□□□180-12		E84AV□□□1834□□0
22.0	MH□□□□□180-32		E84AV□□□2234□□0
30.0	MH□□□□□200-32		E84AV□□□3034□□0
37.0	MH□□□□□225-12		E84AV□□□3734□□0
45.0	MH□□□□□225-22		E84AV□□□4534□□0



Motor – inverter assignment

Rated frequency 87 Hz

- Decentralised inverter 8400 motec (E84DVB)
- Inverter Drives 8400 (E84AV)

Rated power	Product key		
	Motor	Inverter	
P_N			
[kW]			
1.35	MH□□□□□080-32	E84DVB□1524S□□□2□	E84AV□□□1524□□0
2.00	MH□□□□□090-12	E84DVB□2224S□□□2□	E84AV□□□2224□□0
2.70	MH□□□□□090-32	E84DVB□3024S□□□2□	E84AV□□□3024□□0
3.90	MH□□□□□100-12	E84DVB□4024S□□□2□	E84AV□□□4024□□0
5.40	MH□□□□□100-32	E84DVB□5524S□□□2□	E84AV□□□5524□□0
7.10	MH□□□□□112-22	E84DVB□7524S□□□2□	E84AV□□□7524□□0
9.70	MH□□□□□132-12		E84AV□□□1134□□0
13.2	MH□□□□□132-22		E84AV□□□1534□□0
19.4	MH□□□□□160-22		E84AV□□□2234□□0
26.4	MH□□□□□160-32		E84AV□□□3034□□0
32.5	MH□□□□□180-12		E84AV□□□3734□□0



Dimensioning

Torque derating at low motor frequencies

The diagram shows the motor frame size-dependent torque reduction for self-ventilated motors, taking the thermal behaviour during actuation of the inverter into consideration.

Torque characteristics

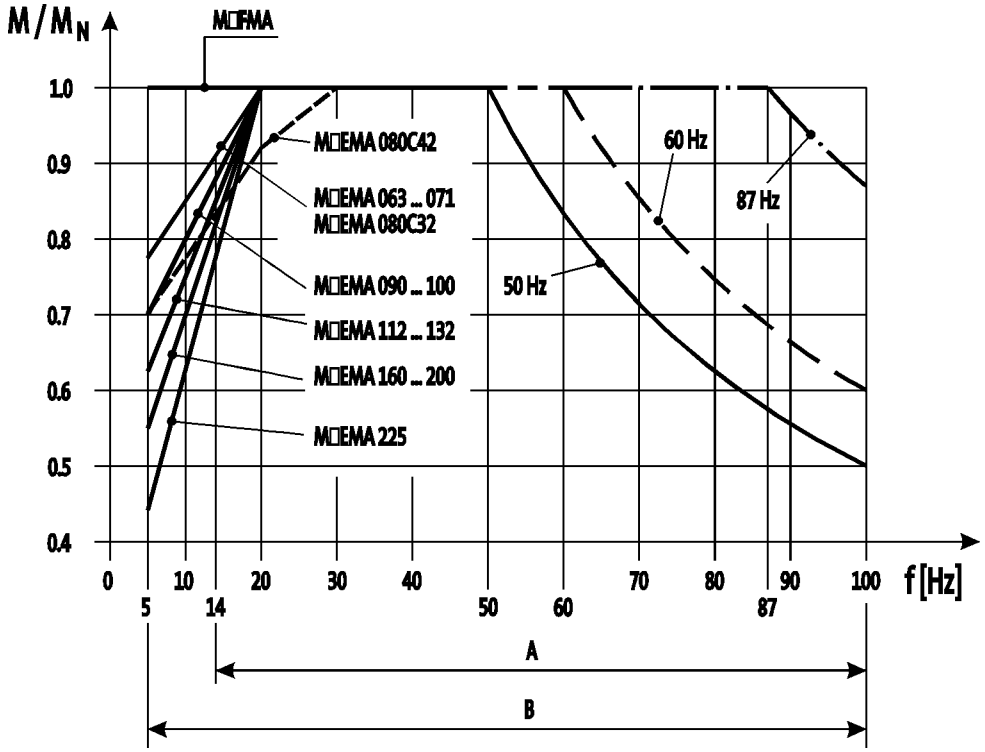

A = Operation with integral fan and brake
B = Operation with integral fan and brake control "Holding current reduction"

5.8

► The motor specifications stated in this catalogue for inverter operation apply to operation with a Lenze inverter. If you are uncertain, get in touch with the manufacturer of the inverter to ask whether the device is capable of driving the motor with the stated specifications (e.g. setting range, base frequency).

You can use the Drive Solution Designer for precise drive dimensioning.

The Drive Solution Designer helps you to carry out a fast and high-quality drive dimensioning.
The software includes well-founded and proven knowledge on drive applications and electro-mechanical drive components.

Please contact your Lenze sales office.





Standards and operating conditions

Degree of protection			
EN 60529			IP55 [1] IP65 [1] IP66 [1]
Energy efficiency class			
IEC 60034-30			IE2
IEC 60034-2-1			Methodology for measuring efficiency
Conformity			
CE			Low-Voltage Directive
			2006/95/EC
EAC			TP TC 004/2011 (TR CU 004/2011)
Approval			
			UkrSEPRO
CCC			GB Standard 12350-2009
CSA			CSA 22.2 No. 100 CSA C390-10
cURus [2]			UL 1004-1 UL 1004-8 Power Conversion Equipment (File-No. E210321)
Temperature class			
IEC/EN 60034-1; utilisation			B
IEC/EN 60034-1; insulation system (enamel-insulated wire)			F
Min. ambient operating temperature			
	$T_{opr,min}$	[°C]	-20
Max. ambient temperature for operation			
	$T_{opr,max}$	[°C]	40
With power reduction	$T_{opr,max}$	[°C]	60
Site altitude			
Amsl	H_{max}	[m]	4000
Max. speed			
	n_{max}	[r/min]	4500

[1] Designs with different degrees of protection:
IP55 with brake (IP54 with manual release lever).
IP54 with resolver RS1.
IP54 with HTL incremental encoder IG128-24V-H.
[2] Motor frame size 225, in preparation.

► In the European Union, the ErP Directive stipulates minimum efficiency levels for three-phase AC motors. Geared three-phase AC motors that do not conform with this Directive do not meet CE requirements and must not be marketed in the European Economic Area. For further information about the ErP Directive and the Lenze products to which it relates, please refer to the brochure entitled "International efficiency directives for three-phase AC motors".



Permissible radial and axial forces

► Forces at medium speed 2000 r/min.

Application of forces

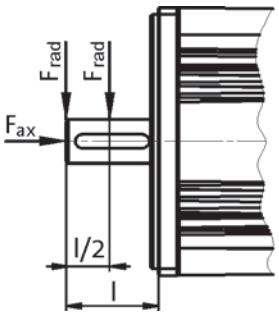

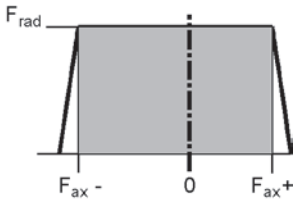

Application of force at l/2

Bearing service life L_{10}												
	10000 h			20000 h			30000 h			50000 h		
	F_{rad} [N]	$F_{ax,-}$ [N]	$F_{ax,+}$ [N]	F_{rad} [N]	$F_{ax,-}$ [N]	$F_{ax,+}$ [N]	F_{rad} [N]	$F_{ax,-}$ [N]	$F_{ax,+}$ [N]	F_{rad} [N]	$F_{ax,-}$ [N]	$F_{ax,+}$ [N]
063	600	-600	300	470	-480	180	410	-430	120	350	-370	70
071	740	-800	470	590	-630	300	510	-550	220	430	-470	140
080	960	-1090	580	770	-860	350	670	-760	250	570	-650	140
090	1050	-1160	630	840	-920	390	730	-800	280	620	-690	160
100	1490	-1490	910	1190	-1160	580	1050	-1010	430	890	-860	270
112	2250	-2330	1340	1790	-1830	840	1570	-1600	610	1330	-1360	370
132	3300	-2150	1190	2640	-1670	710	2320	-1440	480	1970	-1210	250
160	3750	-2700	1520	3000	-2130	950	2640	-1830	670	2250	-1440	360
180	5620	-3270	1790	4500	-2580	1120	3960	-2210	790	3375	-1750	420
200	5620	-3270	1790	4500	-2580	1120	3960	-2210	790	3375	-1750	420
225	5200	-3100	3900	3900	-2100	2900	3300	-1300	2100	2650	-1000	1800

► The values for the bearing service life L_{10} refer to an average speed of 2000 r/min. Depending on the ambient temperatures, the service life of the bearings is also reduced by the grease lifetime.
► Data for axial forces relate to the maximum radial force with the corresponding bearing service life.



Permissible radial and axial forces

► Forces at medium speed 2000 r/min.

Application of force at l

Bearing service life L_{10}												
	10000 h			20000 h			30000 h			50000 h		
	F_{rad} [N]	$F_{ax,-}$ [N]	$F_{ax,+}$ [N]	F_{rad} [N]	$F_{ax,-}$ [N]	$F_{ax,+}$ [N]	F_{rad} [N]	$F_{ax,-}$ [N]	$F_{ax,+}$ [N]	F_{rad} [N]	$F_{ax,-}$ [N]	$F_{ax,+}$ [N]
063	400	-600	300	370	-480	180	320	-430	120	300	-370	70
071	680	-800	470	540	-630	300	470	-550	220	400	-470	140
080	880	-1090	580	700	-860	350	610	-760	250	520	-650	140
090	940	-1160	630	750	-920	390	660	-800	280	560	-690	160
100	1350	-1490	910	1080	-1160	580	940	-1010	430	800	-860	270
112	2040	-2330	1340	1620	-1830	840	1420	-1600	610	1210	-1360	370
132	3020	-2150	1190	2420	-1670	710	2120	-1440	480	1800	-1210	250
160	3410	-2700	1520	2730	-2130	950	2400	-1830	670	2050	-1440	360
180	4550	-3270	1790	3640	-2580	1120	3200	-2210	790	2730	-1750	420
200	4550	-3270	1790	3640	-2580	1120	3200	-2210	790	2730	-1750	420
225	4800	-3100	3900	3600	-2100	2900	3000	-1300	2100	2400	-1000	1800

► The values for the bearing service life L_{10} refer to an average speed of 2000 r/min. Depending on the ambient temperatures, the service life of the bearings is also reduced by the grease lifetime.
► Data for axial forces relate to the maximum radial force with the corresponding bearing service life.



Rated data for 50 Hz

4-pole motors

	P_N	n_N	$U_{N,\Delta}$ [2]	$I_{N,\Delta}$	$U_{N,Y}$	$I_{N,Y}$	I_a/I_N
			± 10 %		± 10 %		
	[kW]	[r/min]	[V]	[A]	[V]	[A]	
MH□□□□□080-32	0.75	1410	230	3.10	400	1.80	5.00
MH□□□□□090-12	1.10	1430	230	4.60	400	2.70	5.40
MH□□□□□090-32	1.50	1435	230	5.80	400	3.30	6.30
MH□□□□□100-12	2.20	1445	230	8.60	400	5.00	6.00
MH□□□□□100-32	3.00	1445	230	12.1	400	7.00	6.50
MH□□□□□112-22	4.00	1455	230	14.5	400	8.40	6.00
MH□□□□□132-12	5.50	1470	230 400 [3]	20.6 11.9	400	11.9	6.10
MH□□□□□132-22	7.50	1460	230 400 [3]	27.0 15.6	400	15.6	8.50
MH□□□□□160-22	11.0	1470	230 400 [3]	37.7 21.8	400	21.8	8.00
MH□□□□□160-32	15.0	1470	230 400 [3]	50.3 29.1	400	29.1	8.20
MH□□□□□180-12	18.5	1475	230 400 [3]	58.8 34.0	400	34.0	8.40
MH□□□□□180-32	22.0	1470	230 400 [3]	68.9 39.8	400	39.8	7.80
MH□□□□□200-32	30.0	1465	230 400 [3]	93.8 53.9	400	53.9	7.00
MH□□□□□225-12	37.0	1483	230 400 [3]	113 65.0	400	65.0	7.50
MH□□□□□225-22	45.0	1480	230 400 [3]	137 79.0	400	79.0	7.60

	M_N	M_a	M_b	cos ϕ	$\eta_{50\,\%}$	$\eta_{75\,\%}$	$\eta_{100\,\%}$	J [1]	m [1]
	[Nm]	[Nm]	[Nm]		[%]	[%]	[%]	[kgcm²]	[kg]
MH□□□□□080-32	5.08	12.0	12.1	0.84	74.9	79.6	79.6	28.0	11.0
MH□□□□□090-12	7.35	20.3	24.2	0.76	77.4	81.6	82.0	32.0	16.0
MH□□□□□090-32	10.0	33.0	34.0	0.76	82.2	83.4	82.8	36.0	18.0
MH□□□□□100-12	14.5	48.0	55.0	0.80	85.4	86.7	86.3	61.0	24.0
MH□□□□□100-32	19.8	67.0	76.0	0.73	83.8	85.6	85.5	66.0	26.5
MH□□□□□112-22	26.3	81.0	100	0.80	86.3	88.2	88.3	135	38.0
MH□□□□□132-12	35.7	90.0	108	0.77	88.2	89.3	89.2	290	59.0
MH□□□□□132-22	49.1	110	175	0.79	87.6	88.9	88.7	336	66.0
MH□□□□□160-22	71.5	164	243	0.82	89.4	90.0	89.8	570	109
MH□□□□□160-32	97.4	224	292	0.82	90.2	90.8	90.6	760	124
MH□□□□□180-12	120	359	371	0.86	90.8	91.4	91.2	1390	175
MH□□□□□180-32	143	400	372	0.87	91.4	92.0	91.6	1440	180
MH□□□□□200-32	196	469	528	0.87	91.9	92.5	92.3	1850	315
MH□□□□□225-12	238	620	620	0.87	94.0	94.6	94.3	4610	395
MH□□□□□225-22	290	698	669	0.88	93.7	94.5	94.3	5300	415

[1] Without accessories
[2] Operation at 87 Hz is possible with 4-pole motors whose rated data at 50 Hz displays the voltage values Δ 230 V.
With motor frame sizes 132-12 to 225-22, the required voltage must also be specified in your order.
[3] Star/delta start-up possible at 400 V.



Rated data for 60 Hz

4-pole motors

	P_N	n_N	$U_{N,\Delta}$ [2]	$I_{N,\Delta}$	$U_{N,Y}$	$I_{N,Y}$	I_a/I_N
			± 10 %		± 10 %		
	[kW]	[r/min]	[V]	[A]	[V]	[A]	
MH□□□□□080-32	0.75	1720	265	2.80	460	1.60	5.80
MH□□□□□090-12	1.10	1740	265	4.00	460	2.30	6.50
MH□□□□□090-32	1.50	1745	265	5.10	460	3.00	7.20
MH□□□□□100-12	2.20	1750	265	7.70	460	4.40	6.90
MH□□□□□100-32	3.00	1755	265	10.6	460	6.10	7.70
MH□□□□□112-22	4.00	1760	265	12.8	460	7.40	7.00
MH□□□□□132-12	5.50	1775	265 460 [3]	18.0 10.4	460	10.4	7.10
MH□□□□□132-22	7.50	1765	265 460 [3]	24.2 14.0	460	14.0	9.70
MH□□□□□160-22	11.0	1775	265 460 [3]	32.5 18.7	460	18.7	9.40
MH□□□□□160-32	15.0	1775	265 460 [3]	44.1 24.5	460	24.5	9.80
MH□□□□□180-12	18.5	1775	265 460 [3]	51.1 29.4	460	29.4	9.70
MH□□□□□180-32	22.0	1775	265 460 [3]	59.7 34.4	460	34.4	9.00
MH□□□□□200-32	30.0	1770	265 460 [3]	80.7 46.5	460	46.5	8.10
MH□□□□□225-12	37.0	1787	265 460 [3]	92.5 53.4	460	53.4	8.70
MH□□□□□225-22	45.0	1784	265 460 [3]	111 64.2	460	64.2	8.80

	M_N	M_a	M_b	cos ϕ	$\eta_{50\,\%}$	$\eta_{75\,\%}$	$\eta_{100\,\%}$	J [1]	m [1]
	[Nm]	[Nm]	[Nm]		[%]	[%]	[%]	[kgcm²]	[kg]
MH□□□□□080-32	4.16	9.37	9.89	0.82	77.9	81.5	82.5	28.0	11.0
MH□□□□□090-12	6.04	17.0	20.0	0.71	79.3	83.0	84.0	32.0	16.0
MH□□□□□090-32	8.21	27.0	28.0	0.75	79.3	83.0	84.0	36.0	18.0
MH□□□□□100-12	12.0	40.0	47.0	0.78	82.6	86.5	87.5	61.0	24.0
MH□□□□□100-32	16.3	55.0	64.0	0.71	84.2	86.6	87.5	66.0	26.5
MH□□□□□112-22	21.7	69.0	84.0	0.79	84.2	86.6	87.5	135	38.0
MH□□□□□132-12	29.6	74.0	92.0	0.77	86.1	88.6	89.5	290	59.0
MH□□□□□132-22	40.6	92.0	147	0.79	86.1	88.6	89.5	336	66.0
MH□□□□□160-22	59.2	148	231	0.81	89.3	90.9	91.0	570	109
MH□□□□□160-32	80.7	210	274	0.81	89.3	90.9	91.0	760	124
MH□□□□□180-12	99.5	338	348	0.86	90.6	92.3	92.4	1390	175
MH□□□□□180-32	118	379	355	0.87	90.6	92.3	92.4	1440	180
MH□□□□□200-32	162	440	505	0.87	92.0	92.9	93.0	1850	315
MH□□□□□225-12	198	590	590	0.87	92.0	92.9	93.0	4610	395
MH□□□□□225-22	241	660	635	0.88	92.6	93.5	93.6	5300	415

[1] Without accessories
[2] Operation at 87 Hz is possible with 4-pole motors whose rated data at 60 Hz displays the voltage values Δ 265 V.
With motor frame sizes 132-12 to 225-22, the required voltage must also be specified in your order.
[3] Star/delta start-up possible at 460 V.



Rated data for 87 Hz

4-pole motors

	P_N	n_N	M_N	M_{max}	$U_{N,\Delta}$	$I_{N,\Delta}$	cos ϕ	$\eta_{50\,\%}$	$\eta_{75\,\%}$	$\eta_{100\,\%}$	J [1]	m [1]
					± 10 %							
	[kW]	[r/min]	[Nm]	[Nm]	[V]	[A]		[%]	[%]	[%]	[kgcm²]	[kg]
MH□□□□□080-32	1.35	2520	5.12	20.0	400	3.10	0.84	77.3	81.6	83.5	28.0	11.0
MH□□□□□090-12	2.00	2540	7.52	30.0	400	4.60	0.78	80.4	84.9	86.5	32.0	16.0
MH□□□□□090-32	2.70	2545	10.1	40.0	400	5.80	0.76	82.3	85.5	86.0	36.0	18.0
MH□□□□□100-12	3.90	2555	14.6	60.0	400	8.60	0.83	85.7	89.6	90.0	61.0	24.0
MH□□□□□100-32	5.40	2555	20.2	80.0	400	12.1	0.76	84.7	87.9	88.5	66.0	26.5
MH□□□□□112-22	7.10	2565	26.4	106	400	14.5	0.83	87.4	90.2	90.9	135	38.0
MH□□□□□132-12	9.70	2580	35.9	144	400	20.6	0.82	88.2	91.4	91.8	290	59.0
MH□□□□□132-22	13.2	2570	49.1	196	400	27.0	0.82	88.2	90.1	90.7	336	66.0
MH□□□□□160-22	19.4	2580	71.8	287	400	37.7	0.81	90.6	91.0	91.6	570	109
MH□□□□□160-32	26.4	2580	97.7	391	400	50.3	0.81	91.4	91.0	91.6	760	124
MH□□□□□180-12	32.5	2585	120	480	400	58.8	0.86	92.0	92.2	92.8	1390	175
MH□□□□□180-32	38.7	2580	143	573	400	68.9	0.87	92.1	92.9	93.4	1440	180
MH□□□□□200-32	52.7	2575	196	782	400	92.6	0.87	92.6	92.7	93.2	1850	315
MH□□□□□225-12	64.0	2593	236	920	400	113	0.87	93.0	94.4	94.8	4610	395
MH□□□□□225-22	78.0	2590	288	1150	400	137	0.85	93.5	94.3	94.7	5300	415

[1] Without accessories





Dimensions, self-ventilated (4-pole)

Design B3

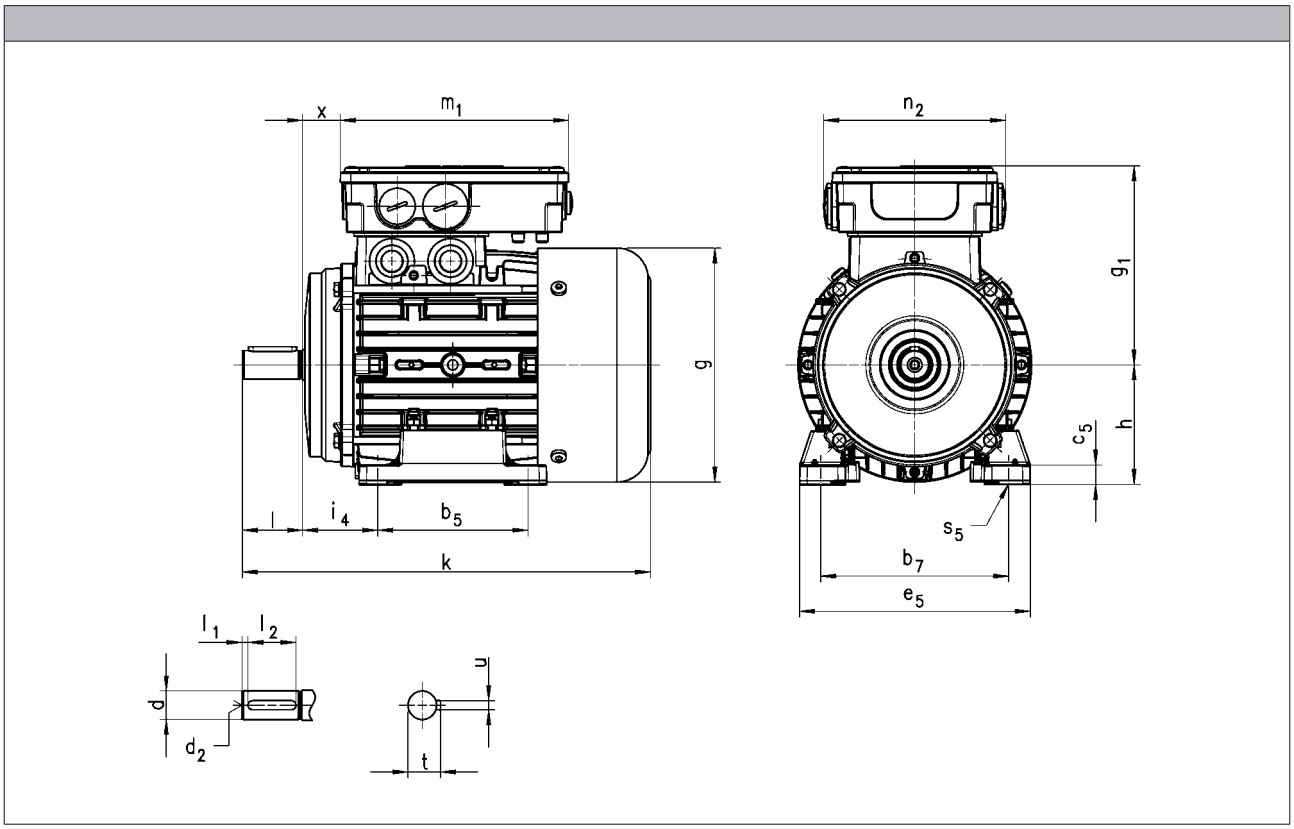

Motor type	MHEMAXX						MHEMABR					
	k	g	g_1	x	m_1	n_2	k	g	g_1	x	m_1	n_2
	[mm]	[mm]	[mm]	[mm]	[mm]	[mm]	[mm]	[mm]	[mm]	[mm]	[mm]	[mm]
080	272	156	132	25	152	121	345	154	132	25	152	121
090	331	176	137	29			399	176	137	29		
100	382 [1]	194	147	36			463 [1]	194	147	36		
	397 [2]						489 [2]					
112	436	218	158	38			526	218	158	38		
132	497	258	187	51	194	125	576	258	187	51	194	125
160	598 [3]	310	220	69	253	152	703 [3]	313	220	69	253	152
	642 [4]						747 [4]					
180	671	348	239	75			784	351	239	75		
200	728	351		77			841			77		
225	961	447	348	68	354	204	1074	447	348	68	354	204

[1] 100-12
[2] 100-32
[3] 160-22
[4] 160-32



Dimensions, self-ventilated (4-pole)

Design B3

Motor type	MHEMARS MHEMAIG MHEMAAG						MHEMABS MHEMABI MHEMABA					
	k	g	g_1	x	m_1	n_2	k	g	g_1	x	m_1	n_2
	[mm]	[mm]	[mm]	[mm]	[mm]	[mm]	[mm]	[mm]	[mm]	[mm]	[mm]	[mm]
080	369	156	132	25	152	121	383	156	142	24	194	125
090	418	178	137	29			436	176	147	28		
100	463 [1]	196	147	36			479 [1]	194	158	35		
	478 [2]						494 [2]					
112	516	220	158	38			556	218	168	37		
132	599	261	187	51	194	125	621	258	187	51		
160	681 [3]	313	220	69	253	152	789 [3]	313	220	69	253	152
	725 [4]						833 [4]					
180	750	351	239	75			863	351	239	75		
200	807			77			920			77		
225	1040	447	348	68	354	204	1153	447	348	68	354	204

	d	d	d	d_2	l	l_1	l_2	t	u
	j6	k6	m6						
	[mm]	[mm]	[mm]	[mm]	[mm]	[mm]	[mm]	[mm]	[mm]
080	19			M6	40	4.0	32	21.5	6.0
090	24			M8	50	5.0	40	27.0	8.0
100	28			M10	60		50	31.0	
112									
132		38		M12	80		70	41.0	10.0
160		42		M16	110		100	45.0	12.0
180		48						51.5	14.0
200			55	M20				59.0	16.0
225			60		140		130	64.0	18.0

	b_7	i_4	b_5	e_5	h	c_5	s_5
	[mm]	[mm]	[mm]	[mm]	[mm]	[mm]	[mm]
080	125	50	100	154	80	13	10.0
090	140	56	125	174	90		
100	160	63	140	194	100	15	12.0
112	190	70		223	112	14	
132	216	89	178	260	132	18	
160	254	108	210 [3]	305	160	22	14.5
			254 [4]				
180	279	121	241 [5]	350	180	23	
			279 [6]				
200	318	133	305	400	200	32	18.5
225	356	149	286 [7]	440	225	34	
			311 [8]				

[1] 100-12
[2] 100-32
[3] 160-22
[4] 160-32
[5] 180-12
[6] 180-32
[7] 225-12
[8] 225-22



Dimensions, self-ventilated (4-pole)

Design B5

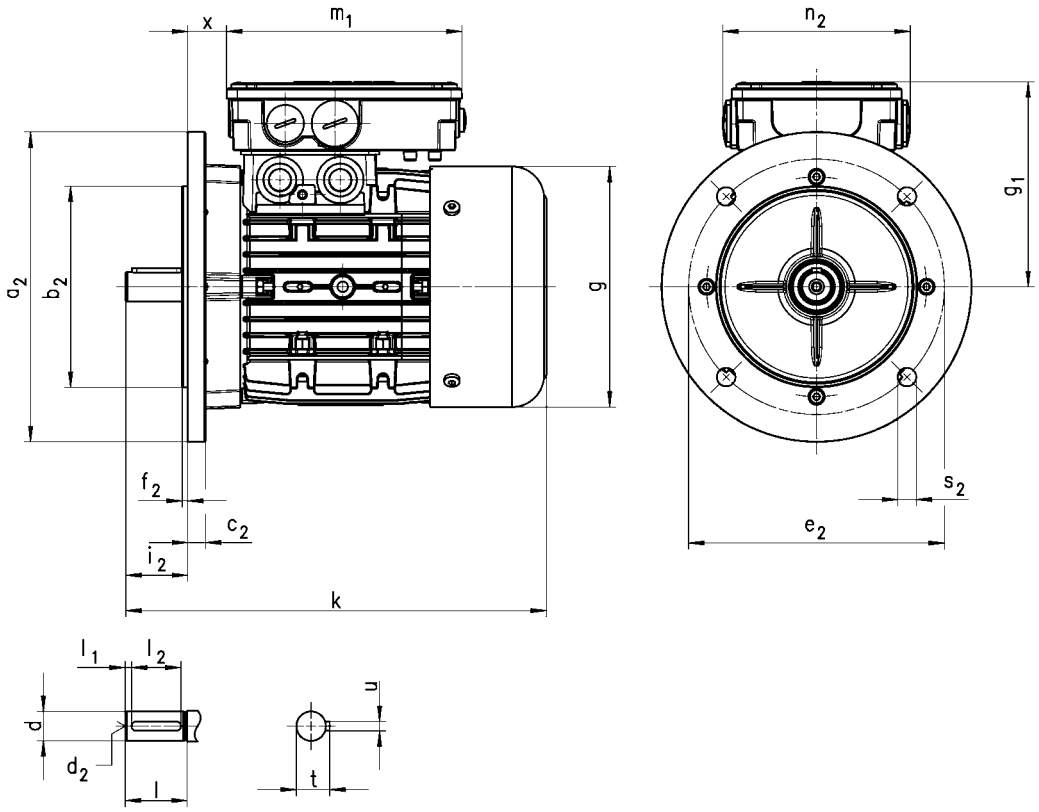

5.8

Motor type	MHEMAXX						MHEMABR					
	k	g	g_1	x	m_1	n_2	k	g	g_1	x	m_1	n_2
	[mm]	[mm]	[mm]	[mm]	[mm]	[mm]	[mm]	[mm]	[mm]	[mm]	[mm]	[mm]
080	272	156	132	25	152	121	345	154	132	25	152	121
090	331	176	137	29			399	176	137	29		
100	382 [1]	194	147	36			463 [1]	194	147	36		
	397 [2]						489 [2]					
112	436	218	158	38			526	218	158	38		
132	497	258	187	51	194	125	576	258	187	51	194	125
160	598 [3]	310	220	69	253	152	703 [3]	313	220	69	253	152
	642 [4]						747 [4]					
180	671	348	239	75			784	351	239	75		
200	728	351		77			841			77		
225	961	447	348	68	354	204	1074	447	348	68	354	204

[1] 100-12
[2] 100-32
[3] 160-22
[4] 160-32



Dimensions, self-ventilated (4-pole)

Design B5

Motor type	MHEMARS MHEMAIG MHEMAAG						MHEMABS MHEMABI MHEMABA					
	k	g	g_1	x	m_1	n_2	k	g	g_1	x	m_1	n_2
	[mm]	[mm]	[mm]	[mm]	[mm]	[mm]	[mm]	[mm]	[mm]	[mm]	[mm]	[mm]
080	369	156	132	25	152	121	383	156	142	24	194	125
090	418	178	137	29			436	176	147	28		
100	463 [1]	196	147	36			479 [1]	194	158	35		
	478 [2]						494 [2]					
112	516	220	158	38			556	218	168	37		
132	599	261	187	51	194	125	621	258	187	51		
160	681 [3]	313	220	69	253	152	789 [3]	313	220	69	253	152
	725 [4]						833 [4]					
180	750	351	239	75			863	351	239	75		
200	807			77			920			77		
225	1040	447	348	68	354	204	1153	447	348	68	354	204

[1] 100-12
[2] 100-32
[3] 160-22
[4] 160-32

	d	d	d	d_2	l	l_1	l_2	t	u
	j6	k6	m6						
	[mm]	[mm]	[mm]	[mm]	[mm]	[mm]	[mm]	[mm]	[mm]
080	19			M6	40	4.0	32	21.5	6.0
090	24			M8	50	5.0	40	27.0	8.0
100	28			M10	60		50	31.0	
112									
132		38		M12	80		70	41.0	10.0
160		42		M16	110		100	45.0	12.0
180		48						51.5	14.0
200			55	M20				59.0	16.0
225			60		140		130	64.0	18.0

	Flange size								
		a_2	b_2	b_2	c_2	e_2	f_2	s_2	i_2
			j6	h6					-0.6 ... 0.5
		[mm]	[mm]	[mm]	[mm]	[mm]	[mm]	[mm]	[mm]
080		200	130		11	165	3.5		40.0
090									50.0
100		250	180		15	215	4.0		60.0
112									
132		300	230		20	265			80.0
160		350	250		13	300	5.0		110
180									
200		400		300	17	350			
225		450		350	18	400			140



Dimensions, self-ventilated (4-pole)

Design B14

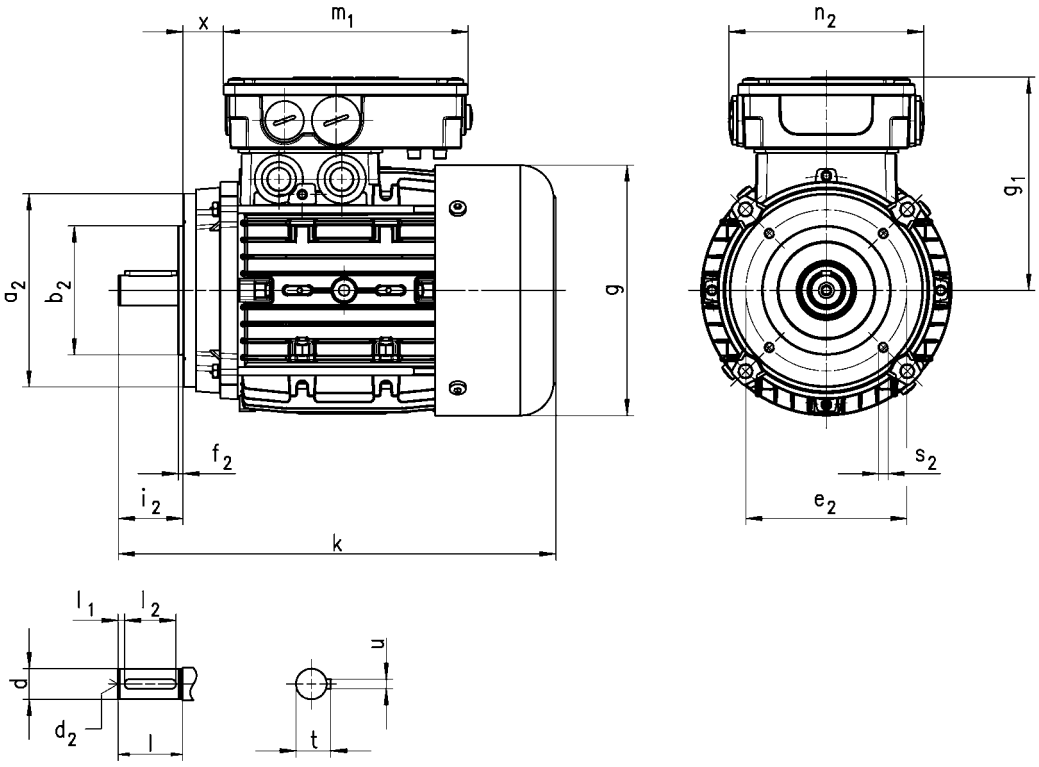

5.8

Motor type	MHEMAXX						MHEMABR					
	k	g	g_1	x	m_1	n_2	k	g	g_1	x	m_1	n_2
	[mm]	[mm]	[mm]	[mm]	[mm]	[mm]	[mm]	[mm]	[mm]	[mm]	[mm]	[mm]
080	272	156	132	25	152	121	345	154	132	25	152	121
090	331	176	137	29			399	176	137	29		
100	382 [1]	194	147	36			463 [1]	194	147	36		
	397 [2]						489 [2]					
112	436	218	158	38			526	218	158	38		

[1] 100-12
[2] 100-32



Dimensions, self-ventilated (4-pole)

Design B14

Motor type	MHEMARS MHEMAIG MHEMAAG						MHEMABS MHEMABI MHEMABA					
	k	g	g_1	x	m_1	n_2	k	g	g_1	x	m_1	n_2
	[mm]	[mm]	[mm]	[mm]	[mm]	[mm]	[mm]	[mm]	[mm]	[mm]	[mm]	[mm]
080	369	156	132	25	152	121	383	156	142	24	194	125
090	418	178	137	29			436	176	147	28		
100	463 [1]	196	147	36			479 [1]	194	158	35		
	478 [2]						494 [2]					
112	516	220	158	38			556	218	168	37		

[1] 100-12
[2] 100-32

	d	d	d_2	l	l_1	l_2	t	u
	j6	k6						
	[mm]	[mm]	[mm]	[mm]	[mm]	[mm]	[mm]	[mm]
080	19		M6	40	4.0	32	21.5	6.0
090	24		M8	50	5.0	40	27.0	8.0
100	28		M10	60		50	31.0	
112								

	Flange size						
		a_2	b_2	e_2	f_2	s_2	i_2
			j6				-0.6 ... 0.5
		[mm]	[mm]	[mm]	[mm]	[mm]	[mm]
080	FT100	120	80	100	3.0	M6x12	40.0
	FT130	160	110	130	3.5	M8x14	
090	FT115	140	95	115	3.0	M8x16	50.0
	FT130	160	110	130	3.5		
100						M8x14	60.0
112						M8x16	



Dimensions, forced ventilated (4-pole)

Design B3

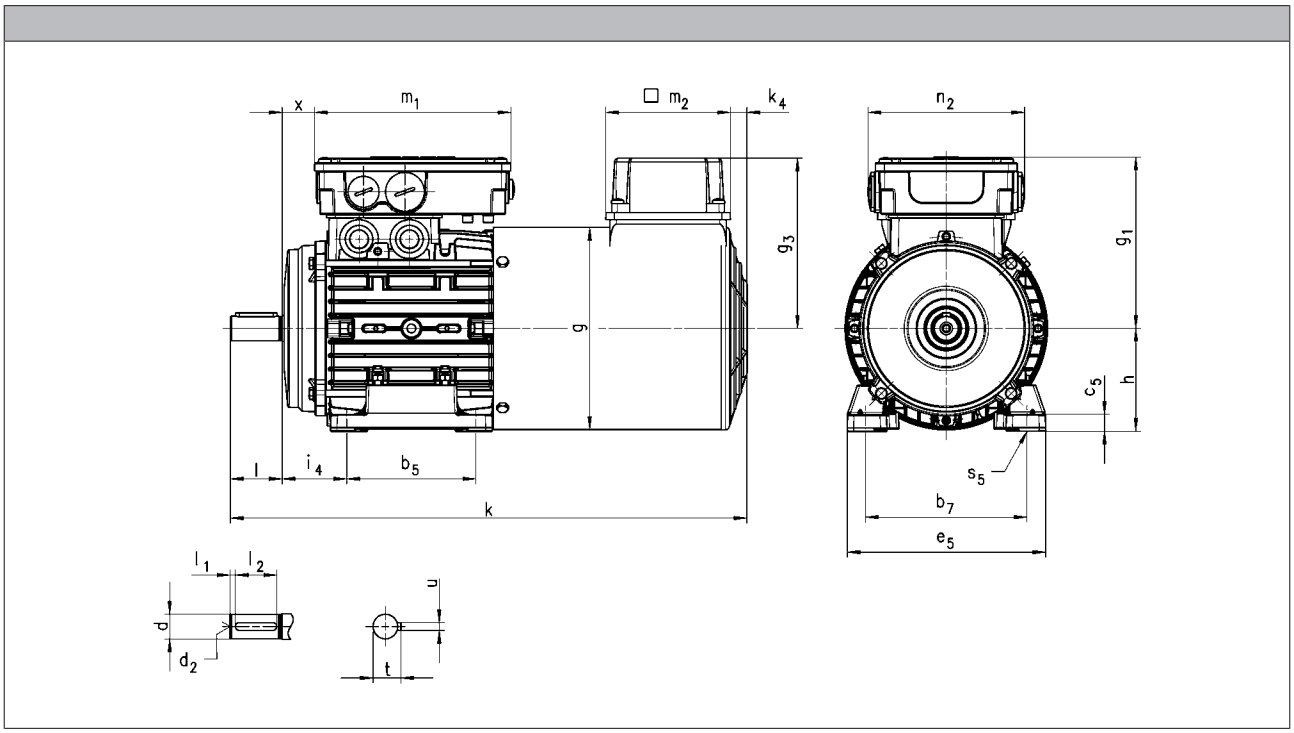

Motor type	MHFMAXX									MHFMABR								
	k	g	g_1	x	m_1	n_2	g_3	k_4	m_2	k	g	g_1	x	m_1	n_2	g_3	k_4	m_2
	[mm]	[mm]	[mm]	[mm]	[mm]	[mm]	[mm]	[mm]	[mm]	[mm]	[mm]	[mm]	[mm]	[mm]	[mm]	[mm]	[mm]	[mm]
080	400	156	132	25	152	121	132	13	96	455	156	132	25	152	121	132	13	96
090	460	176	137	29			141	22	95	513	176	137	29			141	22	95
100	491 [1]	194	147	36			150			552 [1]	194	147	36			150		
	506 [2]									567 [2]								
112	538	218	158	38			162			619	218	158	38			162		
132	612	257	187	51	194	125	182	32		698	257	187	51	194	125	182	32	
160	747 [3]	309	220	69	253	152	209	31	96	777 [3]	309	220	69	253	152	209	31	96
	791 [4]									821 [4]								
180	820	348	239	75						886	348	239	75					
200	883	351		77					106	943	351		77					106
225	1175	447	348	68	354	204			96	1175	447	348	68	354	204			96

[1] 100-12
[2] 100-32
[3] 160-22
[4] 160-32



Dimensions, forced ventilated (4-pole)

Design B3

Motor type	MHFMARS MHFMAIG MHFMAAG									MHFMABS MHFMABI MHFMABA								
	k	g	g_1	x	m_1	n_2	g_3	k_4	m_2	k	g	g_1	x	m_1	n_2	g_3	k_4	m_2
	[mm]	[mm]	[mm]	[mm]	[mm]	[mm]	[mm]	[mm]	[mm]	[mm]	[mm]	[mm]	[mm]	[mm]	[mm]	[mm]	[mm]	[mm]
080	400	156	132	25	152	121	132	13	96	455	156	142	24	194	125	132	13	96
090	460	176	137	29			141	22	95	513	176	147	28			141	22	95
100	491 [1]	194	147	36			150			552 [1]	194	158	35			150		
	506 [2]									567 [2]								
112	619	218	158	38			162			619	218	168	37			162		
132	698	257	187	51	194	125	182	32		698	257	187	51			182	32	
160	822 [3]	309	220	69	253	152	209	31	96	835 [3]	309	220	69	253	152	209	31	96
	866 [4]									877 [4]								
180	886	348	239	75						946	348	239	75					
200	943	351		77					106	1003	351		77					106
225	1175	447	348	68	354	204			96	1175	447	348	68	354	204			96

	d	d	d	d_2	l	l_1	l_2	t	u
	j6	k6	m6						
	[mm]	[mm]	[mm]	[mm]	[mm]	[mm]	[mm]	[mm]	[mm]
080	19			M6	40	4.0	32	21.5	6.0
090	24			M8	50	5.0	40	27.0	8.0
100	28			M10	60		50	31.0	
112									
132		38		M12	80		70	41.0	10.0
160		42		M16	110		100	45.0	12.0
180		48						51.5	14.0
200			55	M20				59.0	16.0
225			60		140		130	64.0	18.0

	b_7	i_4	b_5	e_5	h	c_5	s_5
	[mm]	[mm]	[mm]	[mm]	[mm]	[mm]	[mm]
080	125	50	100	154	80	13	10.0
090	140	56	125	174	90		
100	160	63	140	194	100	15	12.0
112	190	70		223	112	14	
132	216	89	178	260	132	18	
160	254	108	210 [3]	305	160	22	14.5
			254 [4]				
180	279	121	241 [5]	350	180	23	
			279 [6]				
200	318	133	305	400	200	32	18.5
225	356	149	286 [7]	440	225	34	
			311 [8]				

[1] 100-12
[2] 100-32
[3] 160-22
[4] 160-32
[5] 180-12
[6] 180-32
[7] 225-12
[8] 225-22



Dimensions, forced ventilated (4-pole)

Design B5

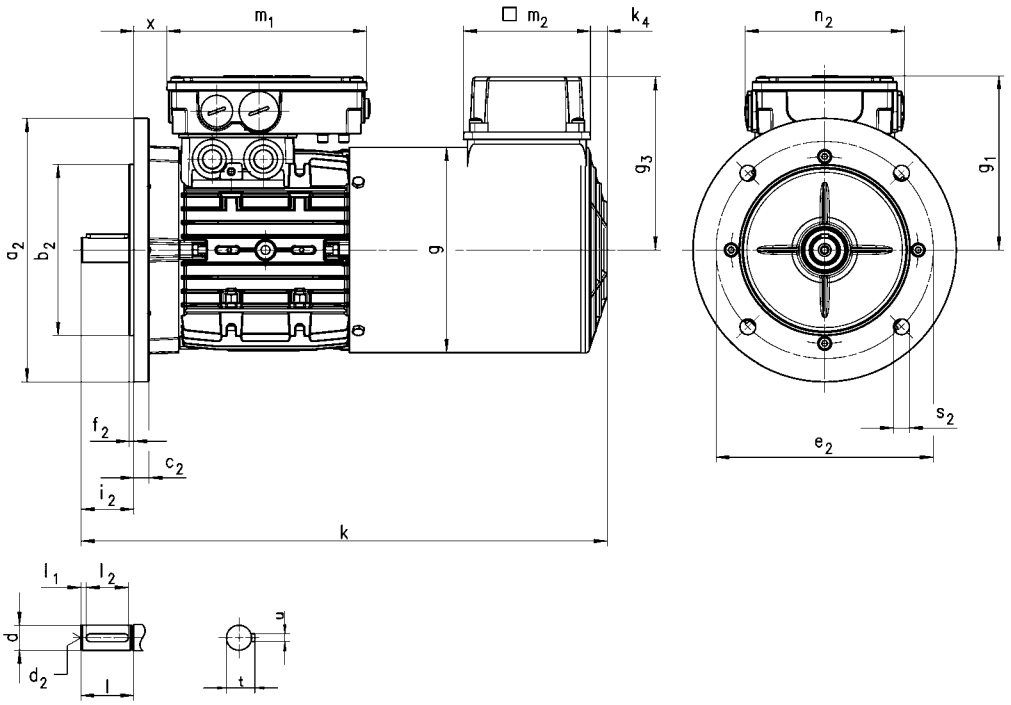

Motor type	MHFMAXX									MHFMABR								
	k	g	g_1	x	m_1	n_2	g_3	k_4	m_2	k	g	g_1	x	m_1	n_2	g_3	k_4	m_2
	[mm]	[mm]	[mm]	[mm]	[mm]	[mm]	[mm]	[mm]	[mm]	[mm]	[mm]	[mm]	[mm]	[mm]	[mm]	[mm]	[mm]	[mm]
080	400	156	132	25	152	121	132	13	96	455	156	132	25	152	121	132	13	96
090	460	176	137	29			141	22	95	513	176	137	29			141	22	95
100	491 [1]	194	147	36			150			552 [1]	194	147	36			150		
	506 [2]									567 [2]								
112	538	218	158	38			162			619	218	158	38			162		
132	612	257	187	51	194	125	182	32		698	257	187	51	194	125	182	32	
160	747 [3]	309	220	69	253	152	209	31	96	777 [3]	309	220	69	253	152	209	31	96
	791 [4]									821 [4]								
180	820	348	239	75						886	348	239	75					
200	883	351		77					106	943	351		77					106
225	1175	447	348	68	354	204			96	1175	447	348	68	354	204			96

[1] 100-12
[2] 100-32
[3] 160-22
[4] 160-32



Dimensions, forced ventilated (4-pole)

Design B5

Motor type	MHFMARS MHFMAIG MHFMAAG									MHFMABS MHFMABI MHFMABA								
	k	g	g_1	x	m_1	n_2	g_3	k_4	m_2	k	g	g_1	x	m_1	n_2	g_3	k_4	m_2
	[mm]	[mm]	[mm]	[mm]	[mm]	[mm]	[mm]	[mm]	[mm]	[mm]	[mm]	[mm]	[mm]	[mm]	[mm]	[mm]	[mm]	[mm]
080	400	156	132	25	152	121	132	13	96	455	156	142	24	194	125	132	13	96
090	460	176	137	29			141	22	95	513	176	147	28			141	22	95
100	491 [1]	194	147	36			150			552 [1]	194	158	35			150		
	506 [2]									567 [2]								
112	619	218	158	38			162			619	218	168	37			162		
132	698	257	187	51	194	125	182	32		698	257	187	51			182	32	
160	822 [3]	309	220	69	253	152	209	31	96	835 [3]	309	220	69	253	152	209	31	96
	866 [4]									877 [4]								
180	886	348	239	75						946	348	239	75					
200	943	351		77					106	1003	351		77					106
225	1175	447	348	68	354	204			96	1175	447	348	68	354	204			96

[1] 100-12
[2] 100-32
[3] 160-22
[4] 160-32

	d	d	d	d_2	l	l_1	l_2	t	u
	j6	k6	m6						
	[mm]	[mm]	[mm]	[mm]	[mm]	[mm]	[mm]	[mm]	[mm]
080	19			M6	40	4.0	32	21.5	6.0
090	24			M8	50	5.0	40	27.0	8.0
100	28			M10	60		50	31.0	
112									
132		38		M12	80		70	41.0	10.0
160		42		M16	110		100	45.0	12.0
180		48						51.5	14.0
200			55	M20				59.0	16.0
225			60		140		130	64.0	18.0

	Flange size								
		a_2	b_2	b_2	c_2	e_2	f_2	s_2	i_2
			j6	h6					-0.6 ... 0.5
		[mm]	[mm]	[mm]	[mm]	[mm]	[mm]	[mm]	[mm]
080		200	130		11	165	3.5		40.0
090									50.0
100		250	180		15	215	4.0		60.0
112									
132		300	230		20	265			80.0
160		350	250		13	300	5.0		110
180									
200		400		300	17	350			
225		450		350	18	400			140



Dimensions, forced ventilated (4-pole)

Design B14

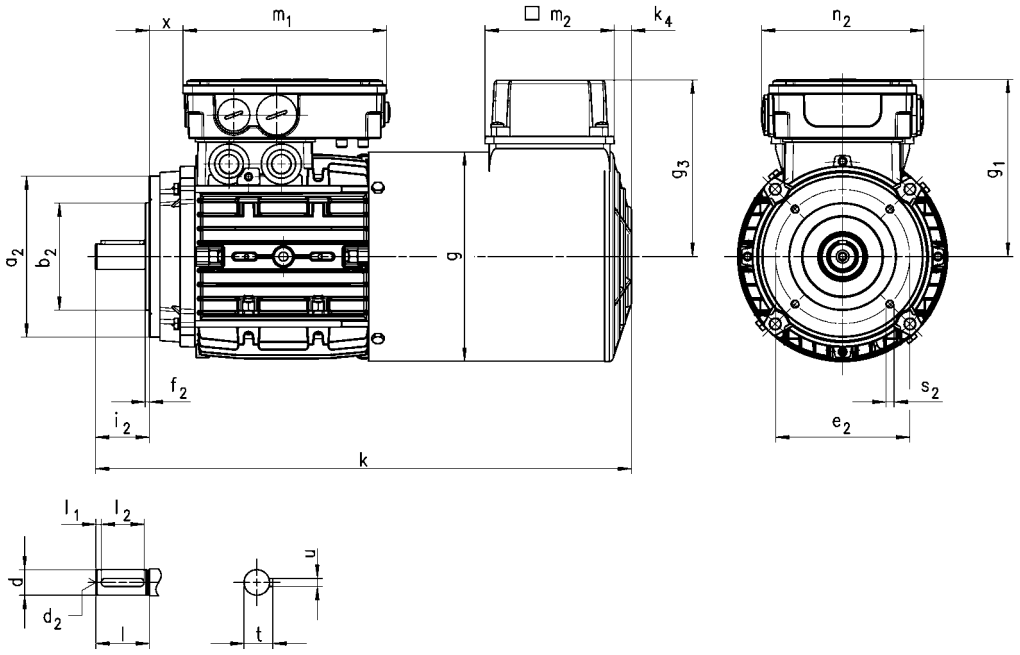

Motor type	MHFMAXX									MHFMABR								
	k	g	g_1	x	m_1	n_2	g_3	k_4	m_2	k	g	g_1	x	m_1	n_2	g_3	k_4	m_2
	[mm]	[mm]	[mm]	[mm]	[mm]	[mm]	[mm]	[mm]	[mm]	[mm]	[mm]	[mm]	[mm]	[mm]	[mm]	[mm]	[mm]	[mm]
080	400	156	132	25	152	121	132	13	96	455	156	132	25	152	121	132	13	96
090	460	176	137	29			141	22	95	513	176	137	29			141	22	95
100	491 [1]	194	147	36			150			552 [1]	194	147	36			150		
	506 [2]									567 [2]								
112	538	218	158	38			162			619	218	158	38			162		

[1] 100-12
[2] 100-32



Dimensions, forced ventilated (4-pole)

Design B14

Motor type	MHFMARS MHFMAIG MHFMAAG	MHFMABS MHFMABI MHFMABA

	k	g	g_1	x	m_1	n_2	g_3	k_4	m_2	k	g	g_1	x	m_1	n_2	g_3	k_4	m_2
	[mm]	[mm]	[mm]	[mm]	[mm]	[mm]	[mm]	[mm]	[mm]	[mm]	[mm]	[mm]	[mm]	[mm]	[mm]	[mm]	[mm]	[mm]
080	400	156	132	25	152	121	132	13	96	455	156	142	24	194	125	132	13	96
090	460	176	137	29			141	22	95	513	176	147	28			141	22	95
100	491 [1]	194	147	36			150			552 [1]	194	158	35			150		
	506 [2]									567 [2]								
112	619	218	158	38			162			619	218	168	37			162		

[1] 100-12
[2] 100-32

	d	d	d_2	l	l_1	l_2	t	u
	j6	k6						
	[mm]	[mm]	[mm]	[mm]	[mm]	[mm]	[mm]	[mm]
080	19		M6	40	4.0	32	21.5	6.0
090	24		M8	50	5.0	40	27.0	8.0
100	28		M10	60		50	31.0	
112								

	Flange size						
		a_2	b_2	e_2	f_2	s_2	i_2
			j6				-0.6 ... 0.5
		[mm]	[mm]	[mm]	[mm]	[mm]	[mm]
080	FT100	120	80	100	3.0	M6x12	40.0
	FT130	160	110	130	3.5	M8x14	
090	FT115	140	95	115	3.0	M8x16	50.0
	FT130	160	110	130	3.5		
100						M8x14	60.0
112						M8x16	



Dimensions, 8400 motec inverter

Rated frequency 50/60 Hz

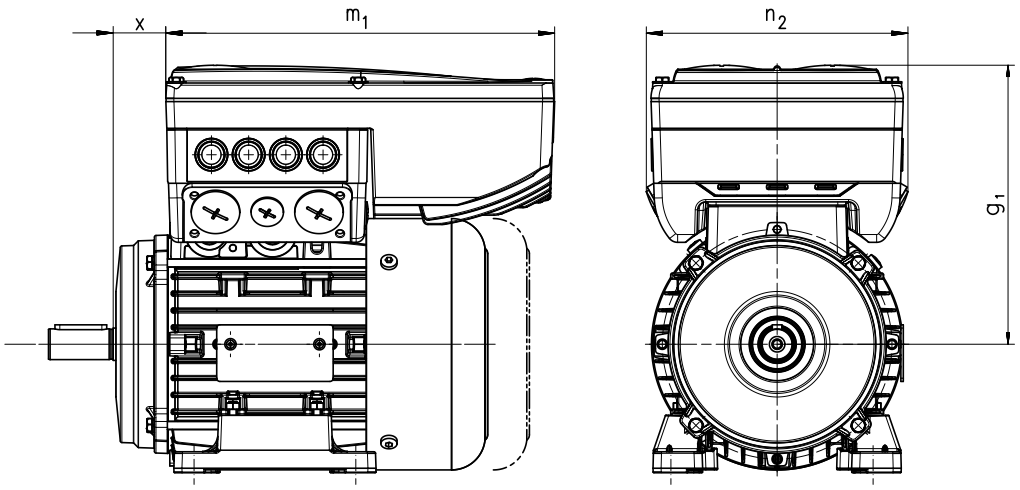

Product key					
Motor	Inverter				
		$g_{1,\ 50Hz}$	$m_{1,\ 50Hz}$	$n_{2,\ 50Hz}$	x_{50Hz}
		[mm]	[mm]	[mm]	[mm]
MH□□□□□080-32	E84DVB□7514S□□□2□	172	241	161	32.5
MH□□□□□090-12	E84DVB□1124S□□□2□	177			36.2
MH□□□□□090-32	E84DVB□1524S□□□2□				
MH□□□□□100-12	E84DVB□2224S□□□2□	217	260	176	42.4
MH□□□□□100-32	E84DVB□3024S□□□2□				
MH□□□□□112-22	E84DVB□4024S□□□2□	282	325	195	32.0
MH□□□□□132-12	E84DVB□5524S□□□2□	301			47.5
MH□□□□□132-22	E84DVB□7524S□□□2□				



Dimensions, 8400 motec inverter

Rated frequency 87 Hz

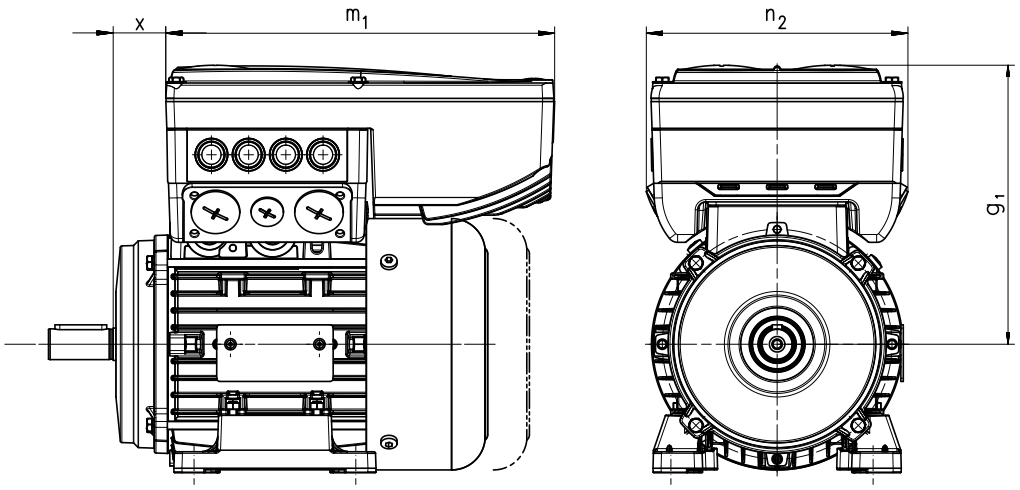

Product key					
Motor	Inverter				
		$g_{1,\ 87Hz}$	$m_{1,\ 87Hz}$	$n_{2,\ 87Hz}$	x_{87Hz}
		[mm]	[mm]	[mm]	[mm]
MH□□□□□080-32	E84DVB□1524S□□□2□	172	241	161	32.5
MH□□□□□090-12	E84DVB□2224S□□□2□	206	260	176	35.2
MH□□□□□090-32	E84DVB□3024S□□□2□				
MH□□□□□100-12	E84DVB□4024S□□□2□	272	325	195	29.9
MH□□□□□100-32	E84DVB□5524S□□□2□				
MH□□□□□112-22	E84DVB□7524S□□□2□	282			32.0





Spring-applied brake

Three-phase AC motors can be fitted with a spring-applied brake. This is activated after the supply voltage is switched off (closed-circuit principle). For optimum adjustment of the brake motor to the application, a range of braking torques and control modes is available for every motor frame size. For applications with very high operating frequencies the brake is also available in a LongLife version, with reinforced mechanical brake components.

Features

Versions
- **Standard**
  - 1 x 10^6 repeating switching cycles
  - 1 x 10^6 reversing switching cycles
- **LongLife**
  - 10 x 10^6 repeating switching cycles
  - 15 x 10^6 reversing switching cycles

Control
- DC supply
- AC supply via rectifier in the terminal box

Degree of protection
- Without manual release IP55
- With manual release IP54

Friction lining
- Non-asbestos, low wearing

Options
- Manual release
- UL/CSA approval
- Noise-reduced

Assignment of 4-pole motors and brakes

Design	Standard Standard		LongLife LongLife	
Motor frame size	**Size**	**Rated torque**	**Size**	**Rated torque**
	Brake		Brake	
		M_k		M_k
		[Nm]		[Nm]
080-32	08 08 10	3.50 8.00 7.00	08 10	8.00 7.00
090-12 090-32	08 08 10 10 10	3.50 8.00 7.00 16.0 23.0	08 10 10	8.00 7.00 16.0
100-12	10 10 12 12	7.00 16.0 14.0 32.0	10 12 12	16.0 14.0 32.0
100-32	10 10 12 12 12	7.00 16.0 14.0 32.0 46.0		



Spring-applied brake

Assignment of 4-pole motors and brakes

Design	Standard		LongLife	
Motor frame size	**Size**	**Rated torque**	**Size**	**Rated torque**
	Brake		Brake	
		M_k		M_k
		[Nm]		[Nm]
112-22	12 12 14 14	14.0 32.0 35.0 60.0		
132-12	14 14 16 16	35.0 60.0 60.0 80.0		
132-22	14 14 16 16 16	35.0 60.0 60.0 80.0 100		
160-22	16 16 18 18	60.0 80.0 80.0 150		
160-32	18 18 18	80.0 150 200		
180-12	18 18 20 20	80.0 150 145 260		
180-32	18 18 20 20 20	80.0 150 145 260 315		
200-32	18 18 20 20 20 20	80.0 150 145 260 315 400		
225-12	25 25 25	265 400 490		
225-22	25 25 25 25	265 400 490 600		



Spring-applied brake

Direct connection without rectifier

If the brake is activated directly without a rectifier, a freewheeling diode or a spark suppressor is required to protect against induction peaks.

- Supply voltages
  DC 24 V
  DC 180 V
  DC 205 V

Connection via mains voltage with brake rectifier

If the brake is not directly supplied with DC voltage, a rectifier is required. This is included in the scope of supply and is located in the terminal box of the motor. The rectifier converts the AC voltage of the connection into DC voltage. The following rectifiers are available:

Half-wave rectifier, 6-pole

- Ratio of supply voltage to brake coil voltage = 2.22
- Approved by UL/CSA
- Supply voltages
  AC 230 V
  AC 400 V
  AC 460 V



Bridge rectifier, 6-pole

- Ratio of supply voltage to brake coil voltage = 1.11
- Supply voltage
  AC 230 V



Bridge/half-wave rectifier, 6-pole

- Supply voltage / brake coil voltage ratio
  up to the overexcitation time = 1.11
  From the overexcitation time = 2.22
- Supply voltages
  AC 230 V
  AC 400 V





Spring-applied brake

Connection via mains voltage with brake rectifier

Bridge/half-wave rectifier, 6-pole
- Supply voltage / brake coil voltage ratio
  up to the overexcitation time = 1.11
  From the overexcitation time = 2.22
- Supply voltages
  AC 230 V
  AC 400 V



During the switching operation the bridge/half-wave rectifier functions as a bridge rectifier for the overexcitation time $t_{ü}$ and then as a half-wave rectifier. This combination optimises the performance of the brake – depending on the assignment of brake coil voltage and supply voltage:

- **Short-time overexcitation of the brake coil**
  Activating the brake coil for the overexcitation time $t_{ü}$ with twice the rated voltage allows the disengagement time to be reduced. The brake opens more quickly and wear on the friction lining is reduced.
  These features make this activation version particularly suitable for lifting applications. It is therefore only available in combination with a brake with increased braking torque.
- **Holding current reduction (cold brake)**
  By reducing the holding current, the bridge/half-wave rectifier is able to reduce the power input to the open brake. As the brake heats up less, this type of activation is known as "cold brake".



Spring-applied brake

Permissible friction energy

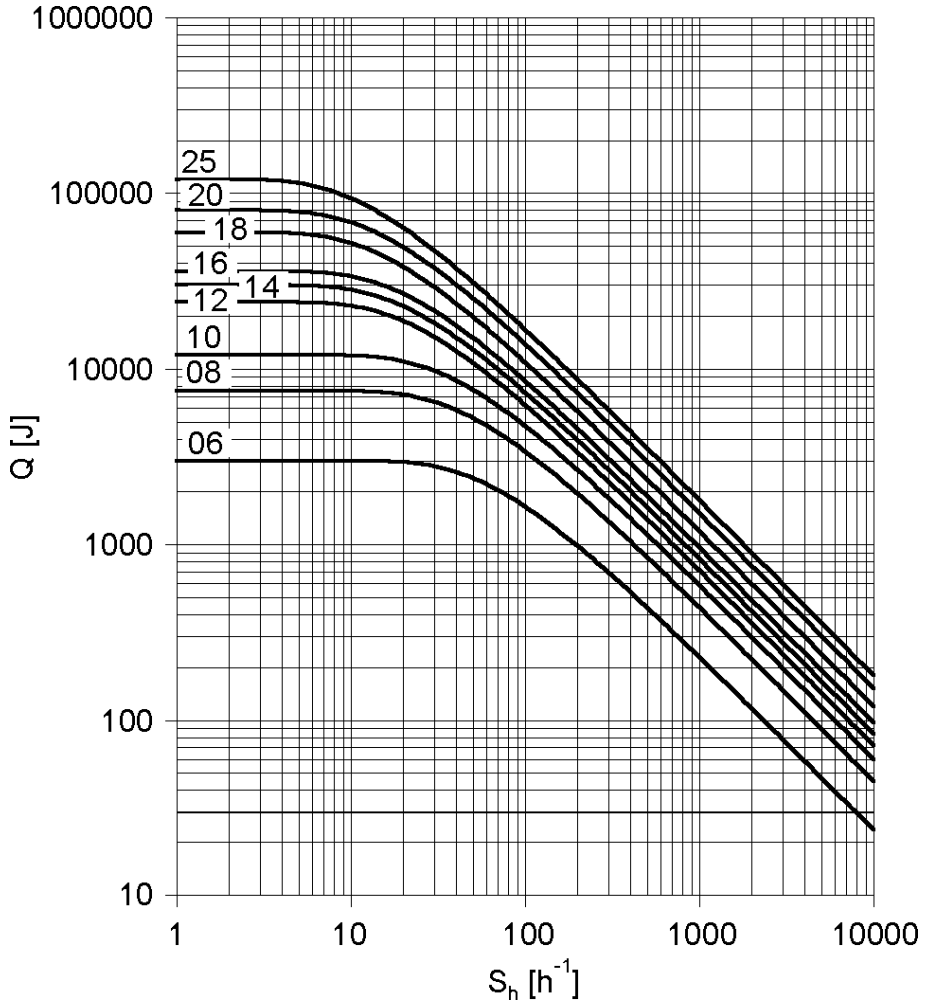

Q =Switching energy per switching cycle
S_h =Operating frequency
Brake size = 06 to 25



Spring-applied brake

Rated data with reduced braking torque

► Please enquire for braking torques and maximum switching work values not listed here.

Size			06	08	10	12	14	16	18	20	25
Power input											
	P_{in}	[kW]	0.020	0.025	0.030	0.040	0.050	0.055	0.085	0.10	0.11
Braking torque											
100	M_B	[Nm]	2.50	3.50	7.00	14.0	35.0	60.0	80.0	145	265
1000	M_B	[Nm]	2.30	3.10	6.10	12.0	30.0	50.0	65.0	115	203
1200	M_B	[Nm]	2.30	3.10	6.00	12.0	29.0	48.0	63.0	112	199
1500	M_B	[Nm]	2.20	3.00	5.80	11.0	28.0	47.0	61.0	109 [1)]	193 [1)]
1800	M_B	[Nm]	2.10	2.90	5.70	11.0	28.0	46.0	60.0 [1)]		
3000	M_B	[Nm]	2.00	2.80	5.30	10.0	26.0 [1)]	43.0 [1)]			
3600	M_B	[Nm]	2.00	2.70	5.20	10.0 [1)]					
Maximum switching energy											
100	Q_E	[KJ]	3.00	7.50	12.0	24.0	30.0	36.0	60.0	80.0	120
1000	Q_E	[KJ]	3.00	7.50	12.0	24.0	30.0	36.0	60.0	80.0	120
1200	Q_E	[KJ]	3.00	7.50	12.0	24.0	30.0	36.0	60.0	80.0	120
1500	Q_E	[KJ]	3.00	7.50	12.0	24.0	30.0	36.0	60.0	24.0 [1)]	36.0 [1)]
1800	Q_E	[KJ]	3.00	7.50	12.0	24.0	30.0	36.0	36.0 [1)]		
3000	Q_E	[KJ]	3.00	7.50	12.0	24.0	18.0 [1)]	11.0 [1)]			
3600	Q_E	[KJ]	3.00	7.50	12.0	7.00 [1)]					
Transition operating frequency											
	$S_{hü}$	[1/h]	79.0	50.0	40.0	30.0	28.0	27.0	20.0	19.0	15.0
Moment of inertia											
	J	[kgcm²]	0.015	0.061	0.20	0.45	0.63	1.50	2.90	7.30	20.0
Mass											
	m	[kg]	0.90	1.50	2.60	4.20	5.80	8.70	12.6	19.5	31.0

[1)] In the region of the load limit the value for friction energy Q_{BW} can be reduced to 40 %.



Spring-applied brake

Rated data with reduced braking torque

► Activation via half-wave or bridge rectifier

Size										
			06	08	10	12	14	16	18	20	25
Friction energy											
	Q_{BW}	[MJ]	113	210	264	706	761	966	1542	2322	3522
Delay time											
Engaging	t_{11}	[ms]	11.0	14.0	20.0	21.0	37.0	53.0	32.0	47.0	264
Rise time											
Braking torque	t_{12}	[ms]	13.0	10.0	17.0	19.0	22.0	30.0	20.0	100	120
Engagement time											
	t_1	[ms]	24.0		37.0	40.0	59.0	83.0	52.0	147	384
Disengagement time											
	t_2	[ms]	35.0	37.0	57.0	65.0	148	169	230	207	269

► Activation via bridge/half-wave rectifier

Design										
			Holding current reduction (cold brake)								
Size										
			06	08	10	12	14	16	18	20	25
Friction energy											
	Q_{BW}	[MJ]	113	210	264	706	761	966	1542	2322	3522
Overexcitation time											
	$t_{ü}$	[ms]	300				1300				
Min. rest time											
	t	[ms]	900				3900				
Delay time											
Engaging	t_{11}	[ms]	12.0	22.0	35.0	49.0	61.0	114	83.0	126	304
Rise time											
Braking torque	t_{12}	[ms]	14.0	16.0	30.0	45.0	37.0	65.0	52.0	269	138
Engagement time											
	t_1	[ms]	26.0	38.0	66.0	93.0	97.0	180	134	395	443
Disengagement time											
	t_2	[ms]	35.0	37.0	57.0	65.0	148	169	230	207	269

► The brake response and application times are guide values. The engagement time is 10 times longer with AC-side switching. With the maximum air gap the disengagement time t_2 – depending on the brake and control – is up to 4 times longer than the disengagement time with the rated air gap.



Spring-applied brake

Rated data with standard braking torque

► Please enquire for braking torques and maximum switching work values not listed here.

Size			06	08	10	12	14	16	18	20	25
Power input											
	P_{in}	[kW]	0.020	0.025	0.030	0.040	0.050	0.055	0.085	0.10	0.11
Braking torque											
100	M_B	[Nm]	4.00	8.00	16.0	32.0	60.0	80.0	150	260	400
1000	M_B	[Nm]	3.70	7.20	14.0	27.0	51.0	66.0	121	206	307
1200	M_B	[Nm]	3.60	7.00	14.0	27.0	50.0	65.0	118	201	300
1500	M_B	[Nm]	3.50	6.80	13.0	26.0	48.0	63.0	115	195 [1)]	291 [1)]
1800	M_B	[Nm]	3.40	6.70	13.0	26.0	47.0	61.0	112 [1)]		
3000	M_B	[Nm]	3.20	6.30	12.0	24.0	44.0 [1)]	57.0 [1)]			
3600	M_B	[Nm]	3.20	6.10	12.0	23.0 [1)]					
Maximum switching energy											
100	Q_E	[KJ]	3.00	7.50	12.0	24.0	30.0	36.0	60.0	80.0	120
1000	Q_E	[KJ]	3.00	7.50	12.0	24.0	30.0	36.0	60.0	80.0	120
1200	Q_E	[KJ]	3.00	7.50	12.0	24.0	30.0	36.0	60.0	80.0	120
1500	Q_E	[KJ]	3.00	7.50	12.0	24.0	30.0	36.0	60.0	24.0 [1)]	36.0 [1)]
1800	Q_E	[KJ]	3.00	7.50	12.0	24.0	30.0	36.0	36.0 [1)]		
3000	Q_E	[KJ]	3.00	7.50	12.0	24.0	18.0 [1)]	11.0 [1)]			
3600	Q_E	[KJ]	3.00	7.50	12.0	7.00 [1)]					
Transition operating frequency											
	$S_{hü}$	[1/h]	79.0	50.0	40.0	30.0	28.0	27.0	20.0	19.0	15.0
Moment of inertia											
	J	[kgcm²]	0.015	0.061	0.20	0.45	0.63	1.50	2.90	7.30	20.0
Mass											
	m	[kg]	0.90	1.50	2.60	4.20	5.80	8.70	12.6	19.5	31.0

[1)] In the region of the load limit the value for friction energy Q_{BW} can be reduced to 40 %.



Spring-applied brake

Rated data with standard braking torque

► Activation via half-wave or bridge rectifier

Size			06	08	10	12	14	16	18	20	25
Friction energy											
	Q_{BW}	[MJ]	85.0	158	264	530	571	966	1542	2322	3522
Delay time											
Engaging	t_{11}	[ms]	15.0		28.0		17.0	27.0	33.0	65.0	110
Rise time											
Braking torque	t_{12}	[ms]	13.0	16.0	19.0	25.0		30.0	45.0	100	120
Engagement time											
	t_1	[ms]	28.0	31.0	47.0	53.0	42.0	57.0	78.0	165	230
Disengagement time											
	t_2	[ms]	45.0	57.0	76.0	115	210	220	270	340	390

► Activation via bridge/half-wave rectifier

Design			Holding current reduction (cold brake)								
Size			06	08	10	12	14	16	18	20	25
Friction energy											
	Q_{BW}	[MJ]	85.0	158	264	530	571	966	1542	2322	3522
Overexcitation time											
	$t_{ü}$	[ms]	300				1300				
Min. rest time											
	t	[ms]	900				3900				
Delay time											
Engaging	t_{11}	[ms]	16.0	25.0	31.0	48.0	33.0	58.0	80.0	102	154
Rise time											
Braking torque	t_{12}	[ms]	14.0	27.0	21.0	43.0	49.0	64.0	109	157	168
Engagement time											
	t_1	[ms]	30.0	52.0		90.0	82.0	122	189	259	322
Disengagement time											
	t_2	[ms]	45.0	57.0	76.0	115	210	220	270	340	390

► The brake response and application times are guide values. The engagement time is 10 times longer with AC-side switching. With the maximum air gap the disengagement time t_2 – depending on the brake and control – is up to 4 times longer than the disengagement time with the rated air gap.



Spring-applied brake

Rated data with increased braking torque

► Please enquire for braking torques and maximum switching work values not listed here.

Size			10	12	14	16	16	18	20	20	25	25
Power input												
	P_{in}	[kW]	0.030	0.040	0.050	0.055	0.055	0.085	0.10	0.10	0.11	0.11
Braking torque												
100	M_B	[Nm]	23.0	46.0	75.0	100	125	200	315	400	490	600
1000	M_B	[Nm]	20.0	39.0	64.0	83.0	103	162	249	317	376	461
1200	M_B	[Nm]	20.0	39.0	62.0	81.0	101	158	244	309	367	449
1500	M_B	[Nm]	19.0	38.0	60.0	78.0	98.0	153	237 [1)]	300 [1)]	356 [1)]	436 [1)]
1800	M_B	[Nm]	19.0	37.0	59.0	77.0	96.0	150 [1)]				
3000	M_B	[Nm]	17.0	34.0	55.0 [1)]	71.0 [1)]	89.0 [1)]					
3600	M_B	[Nm]	17.0	33.0 [1)]								
Maximum switching energy												
100	Q_E	[KJ]	12.0	24.0	30.0	36.0	36.0	60.0	80.0	80.0	120	120
1000	Q_E	[KJ]	12.0	24.0	30.0	36.0	36.0	60.0	80.0	80.0	120	120
1200	Q_E	[KJ]	12.0	24.0	30.0	36.0	36.0	60.0	80.0	80.0	120	120
1500	Q_E	[KJ]	12.0	24.0	30.0	36.0	36.0	60.0	24.0 [1)]	24.0 [1)]	36.0 [1)]	36.0 [1)]
1800	Q_E	[KJ]	12.0	24.0	30.0	36.0	36.0	36.0 [1)]				
3000	Q_E	[KJ]	12.0	24.0	18.0 [1)]	11.0 [1)]	11.0 [1)]					
3600	Q_E	[KJ]	12.0	7.00 [1)]								
Transition operating frequency												
	$S_{hü}$	[1/h]	40.0	30.0	28.0	27.0	27.0	20.0	19.0	19.0	15.0	15.0
Moment of inertia												
	J	[kgcm²]	0.20	0.45	0.63	1.50	1.50	2.90	7.30	7.30	20.0	20.0
Mass												
	m	[kg]	2.60	4.20	5.80	8.70	8.70	12.6	19.5	19.5	31.0	31.0

[1)] In the region of the load limit the value for friction energy Q_{BW} can be reduced to 40 %.

5.8

► Activation via half-wave or bridge rectifier

Size			10	12	14	16		18	20		25	
Friction energy												
	Q_{BW}	[MJ]	198	353	253	563	241	578	1596	580	2465	1409
Delay time												
Engaging	t_{11}	[ms]	10.0	16.0	11.0	22.0	17.0	24.0	46.0	17.0	77.0	38.0
Rise time												
Braking torque	t_{12}	[ms]	19.0	25.0		30.0		45.0	100		120	
Engagement time												
	t_1	[ms]	29.0	41.0	36.0	52.0	47.0	69.0	146	117	197	158
Disengagement time												
	t_2	[ms]	109	193	308	297	435	356	378	470	451	532



Spring-applied brake

Rated data with increased braking torque

► Activation via bridge/half-wave rectifier

Design			Holding current reduction (cold brake)									
Size			10	12	14	16		18	20		25	
Friction energy												
	Q_{BW}	[MJ]	198	353	253	563	241	578	1596	580	2465	1409
Overexcitation time												
	$t_{ü}$	[ms]	300			1300						
Min. rest time												
	t	[ms]	900			3900						
Delay time												
Engaging	t_{11}	[ms]	24.0	27.0	17.0	41.0	21.0	60.0	69.0	17.0	123	85.0
Rise time												
Braking torque	t_{12}	[ms]	44.0	43.0	37.0	55.0	37.0	113	148	100	190	270
Engagement time												
	t_1	[ms]	68.0	70.0	54.0	97.0	57.0	173	217	334	313	355
Disengagement time												
	t_2	[ms]	109	193	308	297	435	356	378	470	451	532

Design			Over-excitation									
Size			10	12	14	16		18	20		25	
Friction energy												
	Q_{BW}	[MJ]	264	706	761	966		1542	2322		3522	
Overexcitation time												
	$t_{ü}$	[ms]	300			1300						
Min. rest time												
	t	[ms]	900			3900						
Delay time												
Engaging	t_{11}	[ms]	29.0	54.0	31.0	70.0	46.0	86.0	103	55.0	171	135
Rise time												
Braking torque	t_{12}	[ms]	53.0	87.0	68.0	93.0	83.0	160	222	319	266	430
Engagement time												
	t_1	[ms]	82.0	141	99.0	163	129	246	325	374	437	565
Disengagement time												
	t_2	[ms]	53.0	81.0	117	141	168	151	160	167	184	204

► The brake response and application times are guide values. The engagement time is 10 times longer with AC-side switching. With the maximum air gap the disengagement time t_2 – depending on the brake and control – is up to 4 times longer than the disengagement time with the rated air gap.



Spring-applied brake

Manual release lever

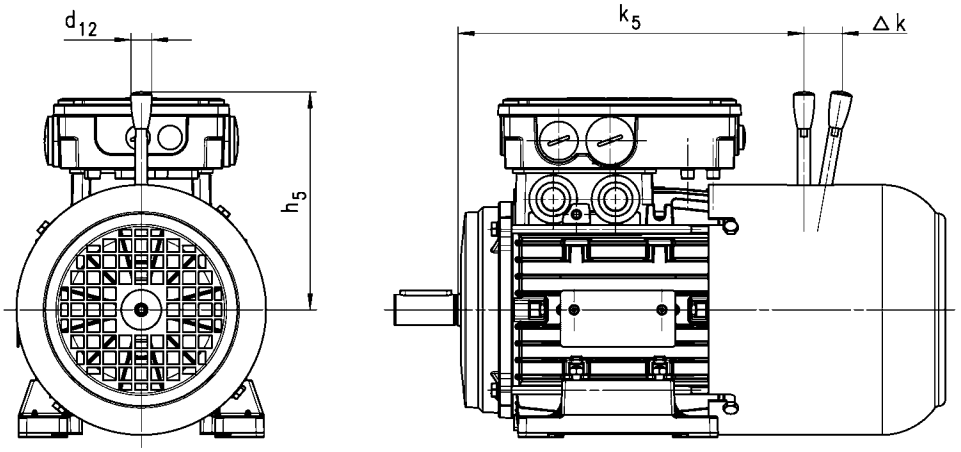

	Brake				
		k_5	Δ k	h_5	d_{12}
		[mm]	[mm]	[mm]	[mm]
080	08 10	224 239	27 28	116 132	13.0 13.0
090	08 10	264 277	27 28	116 132	13.0 13.0
100 [1)]	10 12	305 307	28 37	132 161	13.0 13.0
100 [2)]	10 12	320 322	28 37	132 161	13.0 13.0
112	12 14	320 323	37 41	161 195	13.0 24.0
132	14 16	400 406	41 55	195 240	24.0 24.0
160	16 18	505 509	55 59	240 279	24.0 24.0
180	18 20	540 546	59 74	279 319	24.0 24.0
200	18 20	597 603	59 74	279 319	24.0 24.0
225	25	757	103	445	24.0

[1)] 100-12
[2)] 100-32

The following combinations with manual release lever and motor connection in the same position are not possible:
- HAN connector with connection in position 1
- Inverter motec
- Terminal box of motor sizes 080, 090, for brake and retracting (M□□MA BR/BS/BA/BI)



Resolver

Stator-fed resolver with two stator windings offset by 90° and one rotor winding with transformer winding.

► The three-phase AC motors with resolver cannot be used for speed-dependent safety functions in connection with the SM 301 safety module.

Product key				
				RS1
Accuracy				
			[']	-10 ... 10
Absolute positioning				
				1 revolution
Max. input voltage				
DC	$U_{in,max}$		[V]	10.0
Max. input frequency				
	$f_{in,max}$		[kHz]	4.00
Ratio				
Stator / rotor		± 5 %		0.30
Rotor impedance				
	Z_{ro}		[Ω]	51 + j90
Stator impedance				
	Z_{so}		[Ω]	102 + j150
Impedance				
	Z_{rs}		[Ω]	44 + j76
Min. insulation resistance				
At DC 500 V	R		[MΩ]	10.0
Number of pole pairs				
				1



Incremental encoder and SinCos absolute value encoder

► The three-phase AC motors with incremental encoders or SinCos absolute value encoders cannot be used for speed-dependent safety functions in connection with the SM 301 safety module.

Encoder type			HTL incremental				TTL incremental			SinCos absolute value
Product key			IG128-24V-H	IG512-24V-H	IG1024-24V-H	IG2048-24V-H	IG512-5V-T	IG1024-5V-T	IG2048-5V-T	AM1024-8V-H
Encoder type										Multi-turn
Pulses			128	512	1024	2048	512	1024	2048	1024
Output signals			HTL				TTL			1 Vss
Interfaces			A, B track	A, B, N track and inverted						Hiperface
Absolute revolutions			0							4096
Accuracy		[']	-22.5 ... 22.5	-2 ... 2						-0.8 ... 0.8
Min. input voltage										
DC	$U_{in,min}$	[V]	8.00				4.75			7.00
Max. input voltage										
DC	$U_{in,max}$	[V]	26.0	30.0			5.25			12.0
Max. current consumption										
	I_{max}	[A]	0.040	0.15						0.080
Limit frequency										
	f_{max}	[kHz]	30.0	160			300			200
Inverter assignment			E84AVSC E84AVHC	E84AVHC			E84AVTC E94A ECS EVS93			

Inverters
- Inverter Drives 8400 StateLine (E84AVSC)
- Inverter Drives 8400 HighLine (E84AVHC)
- Inverter Drives 8400 TopLine (E84AVTC)

Servo-Inverters
- Servo Drives 9400 (E94A)
- 9300 servo inverters (EVS93)
- Servo Drives ECS



Blower

► The blower terminal box is available in positions 2, 3 or 5.

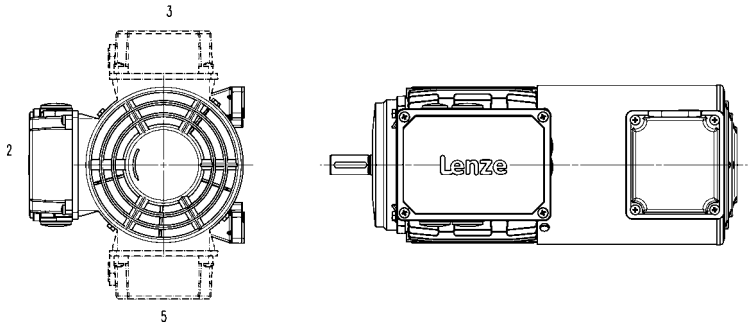

Rated data for 50 Hz

Size	Number of phases	Connection method					
Motor							
			U_{min}	U_{max}	P_{max}	I_{max}	m
			[V]	[V]	[kW]	[A]	[kg]
063	1		230	277	0.027	0.11	2.00
	3	Δ	200	303	0.028	0.12	
		Y	346	525		0.070	
071	1		230	277	0.027	0.10	2.10
	3	Δ	200	303	0.031	0.11	
		Y	346	525		0.060	
080	1		230	277	0.029	0.11	2.30
	3	Δ	200	303	0.031		
		Y	346	525		0.060	
090	1		220	277	0.065	0.29	2.70
	3	Δ	200	303	0.091	0.38	
		Y	346	525		0.22	
100	1		220	277	0.066	0.28	3.00
	3	Δ	200	303	0.091	0.37	
		Y	346	525		0.22	
112	1		220	277	0.071	0.28	3.10
	3	Δ	200	303	0.097	0.35	
		Y	346	525		0.20	
132	1		230	277	0.098	0.40	4.20
	3	Δ	200	303	0.12	0.58	
		Y	346	525		0.33	
160	1		230	277	0.25	0.97	6.20
	3	Δ	200	303		0.87	
		Y	346	525		0.50	
180	1		230	277		0.97	8.00
	3	Δ	200	303		0.87	
		Y	346	525		0.50	



Blower

Rated data for 50 Hz

Size	Number of phases	Connection method					
Motor							
			U_{min}	U_{max}	P_{max}	I_{max}	m
			[V]	[V]	[kW]	[A]	[kg]
200	1		230	277	0.25	0.97	8.00
	3	Δ	200	303		0.87	
		Y	346	525		0.50	
225		Δ	200	400	0.28	1.10	15.0
		Y	346	525	0.17	0.35	

Rated data for 60 Hz

Size	Number of phases	Connection method					
Motor							
			U_{min}	U_{max}	P_{max}	I_{max}	m
			[V]	[V]	[kW]	[A]	[kg]
063	1		230	277	0.032	0.12	2.00
	3	Δ	220	332	0.028	0.10	
		Y	380	575		0.060	
071	1		230	277	0.033	0.12	2.10
	3	Δ	220	332	0.029	0.10	
		Y	380	575		0.060	
080	1		230	277	0.037	0.14	2.30
	3	Δ	220	332	0.034	0.10	
		Y	380	575		0.060	
090	1		220	277	0.065	0.25	2.70
	3	Δ		332	0.077	0.33	
		Y	380	575		0.19	
100	1		220	277	0.075	0.30	3.00
	3	Δ		332	0.087	0.31	
		Y	380	575		0.18	
112	1		220	277	0.094	0.37	3.10
	3	Δ		332	0.10	0.31	
		Y	380	575		0.18	
132	1		230	277	0.15	0.57	4.20
	3	Δ	220	332		0.44	
		Y	380	575		0.25	
160		Δ	220	332	0.36	0.93	6.20
		Y	380	575		0.56	
180		Δ	220	332		0.93	8.00
		Y	380	575		0.56	
200		Δ	220	332		0.93	
		Y	380	575		0.56	
225		Δ	220	400	0.28	0.76	15.0
		Y	380	575	0.26	0.43	



Temperature monitoring

► The thermal sensors are integrated in the windings. The use of an additional motor protection switch is recommended.

TKO thermal contacts

Function	Operating temperature	Min. reset temperature	Max. reset temperature	Max. input current	Max. input voltage
					AC
	T	T_{min}	T_{max}	$I_{in,max}$	$U_{in,max}$
	-5 ... 5				
	[°C]	[°C]	[°C]	[A]	[V]
NC contact	150	90.0	135	2.50	250

PTC thermistor

Function	Operating temperature	Rated resistance			Standard
		155 °C	-20 °C	140 °C	
	T	R_N	R_N	R_N	
	-5 ... 5				
	[°C]	[Ω]	[Ω]	[Ω]	
Sudden change in resistance	150	550	30.0	250	DIN 44080 DIN VDE 0660 Part 303



Temperature monitoring

KTY temperature sensor

	Function	Rated resistance			Max. input current	
		25 °C	150 °C	170 °C	25 °C	170 °C
		R_N	R_N	R_N	$I_{in,max}$	$I_{in,max}$
		[Ω]	[Ω]	[Ω]	[A]	[A]
KTY83-110	Continuous resistance change	1000	2225	2471	0.010	0.002
KTY84-130	Continuous resistance change	603	1334	1482	0.010	0.002

Variation of resistance

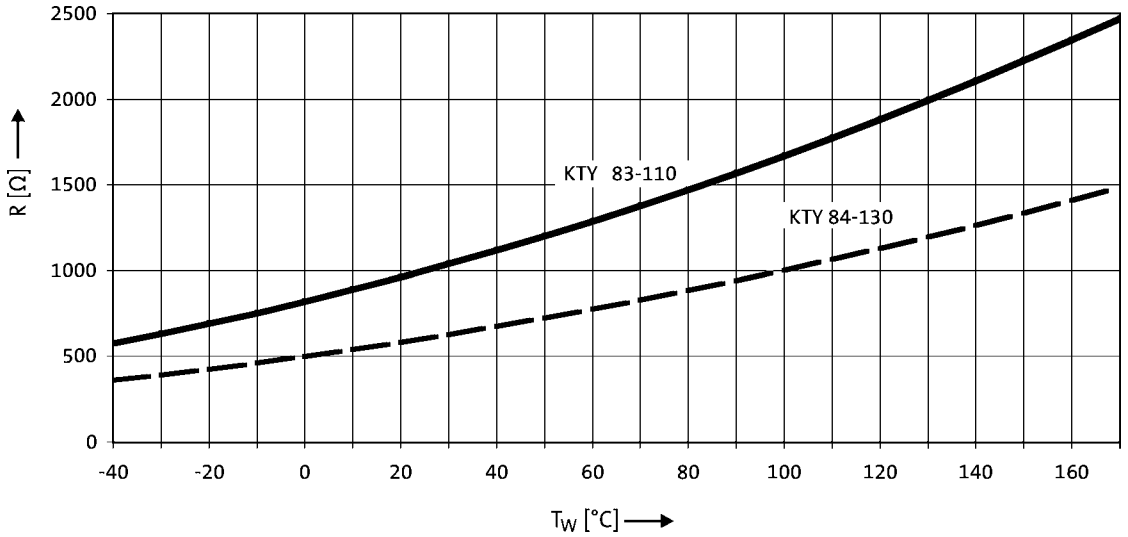

► If the thermal sensor is supplied with a measurement current of 1 mA, the above relationship between the temperature and the resistance applies.

5.8



Terminal box

The three-phase AC motors are designed for operation at a constant mains frequency and with an inverter.
For 50 Hz operation, the motors are operated in Δconfiguration at 230 V or in star configuration at 400 V.
For inverter operation, the base frequency has been specified as 87 Hz at a rated voltage of 400 V in Δconfiguration.

In the standard version, the motors are connected in the terminal box. As an option, the motors are also available with the connectors described on the following pages as long as the permissible ratings are not exceeded.

Connections

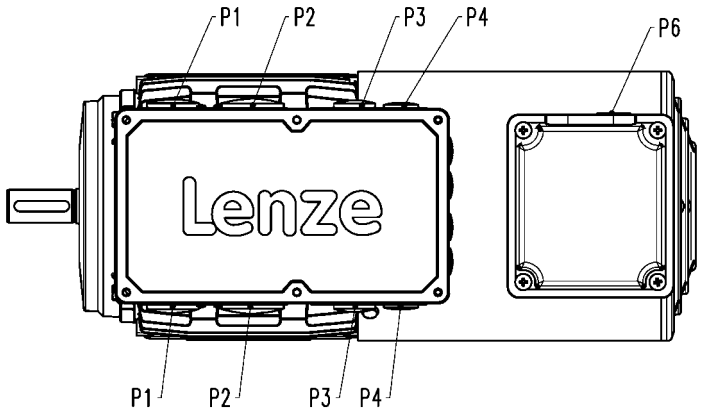

Motor type	M□□MAXX M□□MABR M□□MARS M□□MAIG M□□MAAG	M□□MABS M□□MABI M□□MABA
Built-on accessories		

	P_1	P_2	P_3	P_4	P_6	P_1	P_2	P_3	P_4	P_6
	[mm]	[mm]	[mm]	[mm]	[mm]	[mm]	[mm]	[mm]	[mm]	[mm]
063	M16x1.5	M20x1.5								
071										
080	M20x1.5	M25x1.5				M25x1.5	M32x1.5			
090										
100								M20x1.5	M16x1.5	
112					M16x1.5					M16x1.5
132	M25x1.5	M32x1.5								
160	M50x1.5	M16x1.5	M20x1.5	M16x1.5		M50x1.5	M16x1.5			
180										
200										
225 [1]	M12x1.5	M63x1.5	M50x1.5	M12x1.5		M12x1.5	M63x1.5	M50x1.5	M12x1.5	

[1] The cable glands P1 to P4 are only arranged at the bottom.



Plug connectors

ICN, HAN and M12 connectors (only for IG128-24V-H incremental encoder) are available for the three-phase AC motors.

ICN connector

A connector is used for the power connection, connection of the brake, and the temperature monitoring connection.
The feedback and blower connections are implemented via a separate connector in each case.

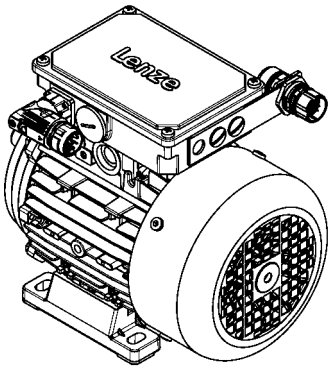

Connection for power, brake and temperature monitoring

The connectors can be rotated by 270° and are equipped with a bayonet catch for SpeedTec connectors. As the connector fixing is also compatible with conventional box nuts, existing mating connectors can still be used without difficulty. The motor connection is determined in the terminal box.

► ICN 6-pole

No connection of temperature monitoring possible!

Pin assignment			
Contact	Designation	Meaning	
1	BD1 / BA1	Brake +/AC	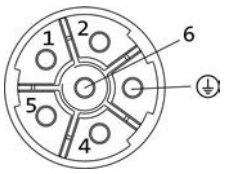
2	BD2 / BA2	Brake -/AC	
PE	PE	PE conductor	
4	U	Phase U power	
5	V	Phase V power	
6	W	Phase W power	

► ICN 8-pole

Pin assignment			
Contact	Designation	Meaning	
1	U	Phase U power	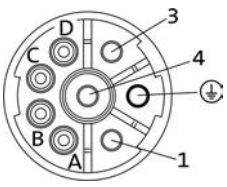
PE	PE	PE conductor	
3	W	Phase W power	
4	V	Phase V power	
A	TB1 / TP1 / R1	Thermal sensor: TKO/PTC/ +KTY	
B	TB2 / TP2 / R2	Thermal sensor: TKO/PTC/-KTY	
C	BD1 / BA1	Brake +/AC	
D	BD2 / BA2	Brake -/AC	



ICN connector

Feedback connection

All encoder systems (apart from IG128-24V-H) are also available with an ICN connector fixed to the motor terminal box for exceptionally fast commissioning. The connectors are fitted with a bayonet fixing, which is also compatible with conventional union nuts. Existing mating connectors can therefore continue to be used without difficulty.

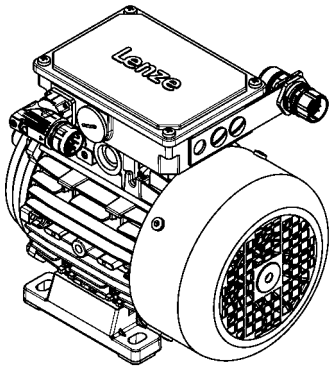

► Resolver

Pin assignment			
Contact	Designation	Meaning	
1	+Ref	Transformer windings	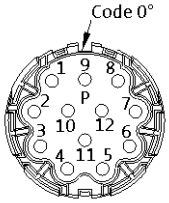
2	-Ref		
3	+VCC ETS	Supply: Electronic nameplate	
4	+COS	Cosine stator windings	
5	-COS		
6	+SIN	Sine stator windings	
7	-SIN		
8		Not assigned	
9			
10			
11	+KTY	KTY temperature sensor	
12	-KTY		

► Hiperface incremental encoder and SinCos absolute value encoder

Pin assignment			
Contact	Designation	Meaning	
1	B	Track B/+SIN	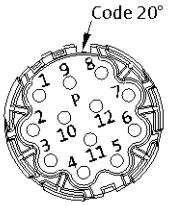
2	A^-	Track A inverse/-COS	
3	A	Track A/+COS	
4	$+U_B$	Supply +	
5	GND	Mass	
6	Z^-	Zero track inverse/-RS485	
7	Z	Zero track/+RS485	
8		Not assigned	
9	B^-	Track B inverse/-SIN	
10		Not assigned	
11	+KTY	KTY temperature sensor	
12	-KTY		



ICN connector

Dimensions of the connectors on the terminal box

The following connector positions are possible:
- power connection (A) in position 5 and feedback connection (B) in position 3
- power connection (A) in position 3 and feedback connection (B) in position 5

With the following motors, the feedback connection (B) is only available in position 3 or 5:
- motor frame size 132 to 180

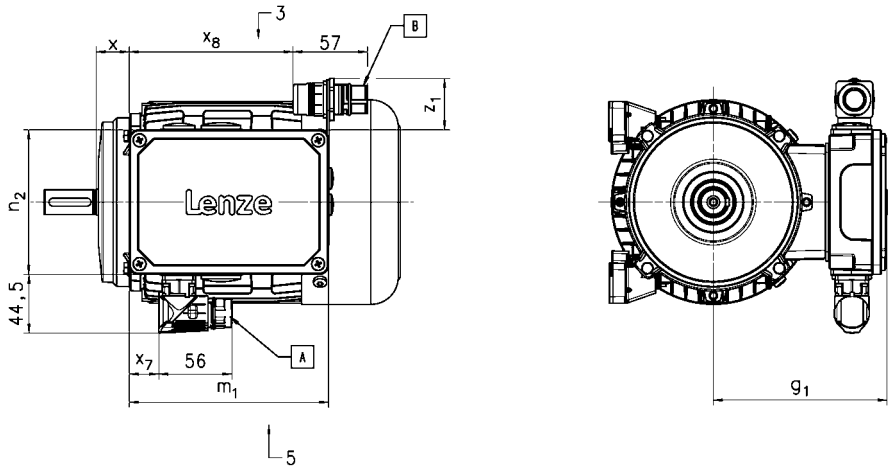

Motor type	M□□MAXX M□□MARS M□□MAIG M□□MAAG	M□□MABR M□□MABS M□□MABI M□□MABA

	g_1	x	m_1	n_2	x_7	x_8	$z_{1, max}$
	[mm]	[mm]	[mm]	[mm]	[mm]	[mm]	[mm]
063	109	17	136	103	16	109	43
071	118	24					
080	132	25	152	121	23	125	41
090	137	29					
100	147	36					
112	158	38					
132	187	51	194	125	27	166	71
160	220	69	253	152		200	65
180	239	75					
200		77					
225	348	68	354	204		328	51



ICN connector

Blower connection

The blower is also optionally available with an ICN connector fixed to the terminal box of the blower for exceptionally fast commissioning. The connectors are fitted with a bayonet fixing, which is also compatible with conventional union nuts. Existing counter plugs can therefore continue to be used without difficulty.

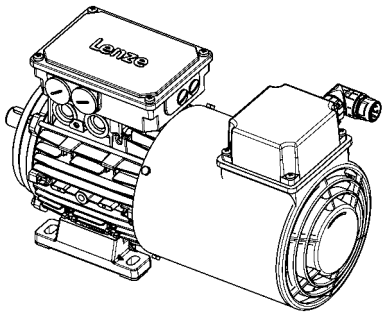

► Blower 1-ph

Pin assignment			
Contact	Designation	Meaning	
PE	PE	PE conductor	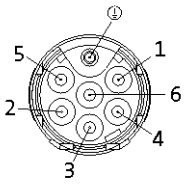
1	U1	Fan	
2	U2		
3		Not assigned	
4			
5			
6			

► Blower 3-ph

Pin assignment			
Contact	Designation	Meaning	
PE	PE	PE conductor	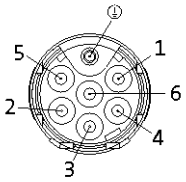
1	U	Phase U power	
2		Not assigned	
3	V	Phase V power	
4		Not assigned	
5			
6	W	Phase W power	



ICN connector

Blower connection

- The blower terminal box is available in positions 2, 3 or 5.
- In addition, the cover of the blower terminal box (including connectors) can be rotated progressively through 90° if necessary.

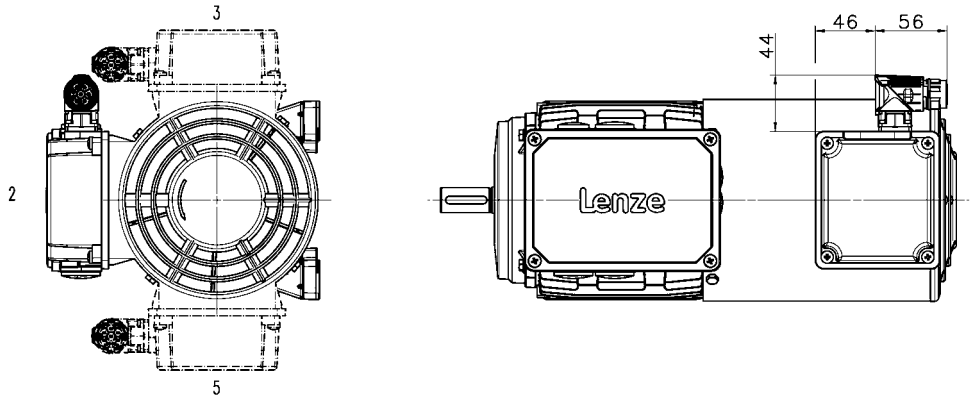



M12 connector

IG128-24V-H incremental encoder connection

As a standard this incremental encoder is equipped with a connection cable of about 0.5 m length and with a common industry standard M12 connector at its end.

Pin assignment			
Contact	Designation	Meaning	
1	$+U_B$	Supply +	
2	B	Track B	
3	GND	Mass	
4	A	Track A	



HAN connector

10E

In the case of the rectangular HAN-10E connectors, all six ends of the three winding phases are taken out to the power contacts. The motor circuit is therefore determined in the mating connector.

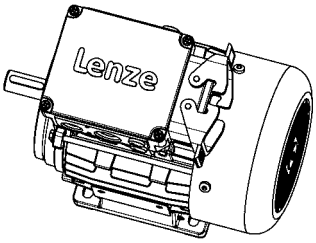

Pin assignment	
Contact	Meaning
1	Terminal board: U1
2	Terminal board: V1
3	Terminal board: W1
4	Brake +/AC
5	Brake -/AC
6	Terminal board: W2
7	Terminal board: U2
8	Terminal board: V2
9	Thermal sensor: +KTY/PTC/TKO
10	Thermal sensor: KTY/PTC/TKO

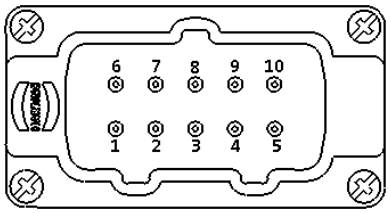



HAN connector

HAN modular

The connector is available with two different power modules (16 A or 40 A), depending on the rated motor current. The motor connection is determined in the terminal box and must be checked before commissioning.

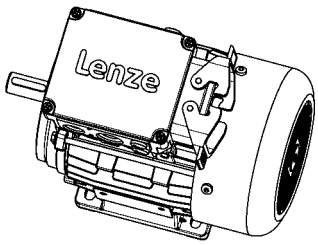

► HAN modular 16 A

Pin assignment			
Module	Contact	Meaning	
A	1	Terminal board: U1	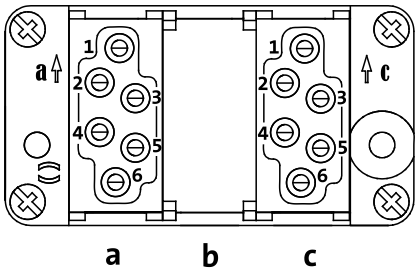
	2	Terminal board: V1	
	3	Terminal board: W1	
B		Dummy module	
C	1	Thermal sensor: +KTY/PTC/TKO	
	2	Brake +/AC	
	3	Brake -/AC	
	4	Rectifier: Switching contact	
	5		
	6	Thermal sensor: KTY/PTC/TKO	

► HAN modular 40 A

Pin assignment			
Module	Contact	Meaning	
A	1	Terminal board: U1	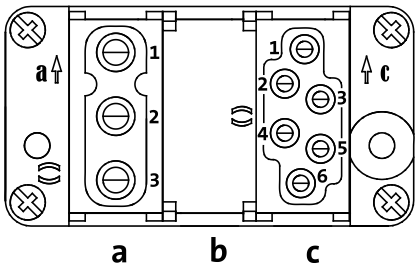
	2	Terminal board: V1	
	3	Terminal board: W1	
B		Dummy module	
C	1	Thermal sensor: +KTY/PTC/TKO	
	2	Brake +/AC	
	3	Brake -/AC	
	4	Rectifier: Switching contact	
	5		
	6	Thermal sensor: KTY/PTC/TKO	



HAN connector

► The connection position for the connector is shown in position 1. Positions 3 and 5 are also possible.

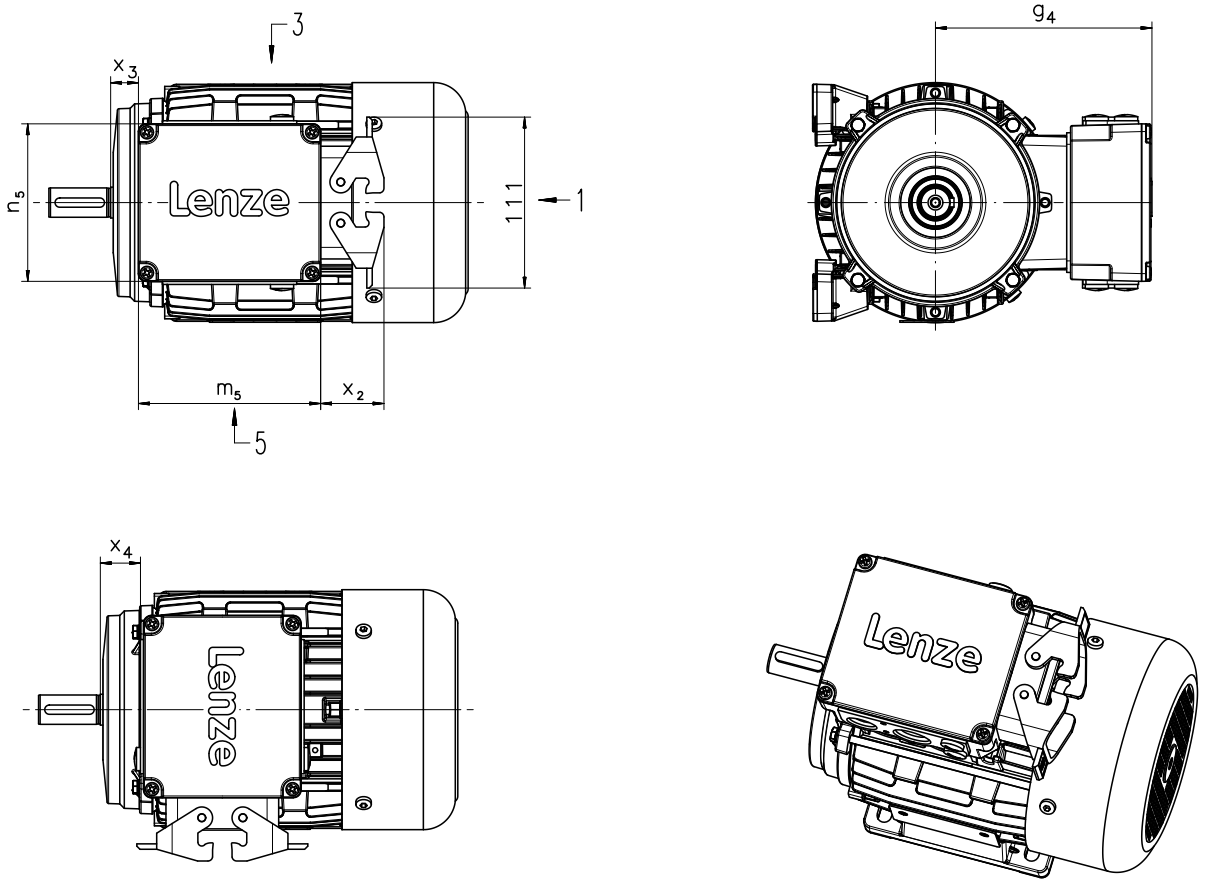

Motor type	M□□MAXX M□□MABR

	g_4	m_5	n_5	x_2	x_3	x_4
	[mm]	[mm]	[mm]	[mm]	[mm]	[mm]
063	120	118	102	41	11	12
071	129				16	17
080	138				18	26
090	143				22	30
100	154				29	37
112	164				28	36
132 [1)]	233	120	180	47	48	18
160	248				72	42

[1)] In the case of the B5 design motors, it is not possible to connect the connector at position 3 or 5.

IE1 MD three-phase AC motors

0.12 to 22 kW

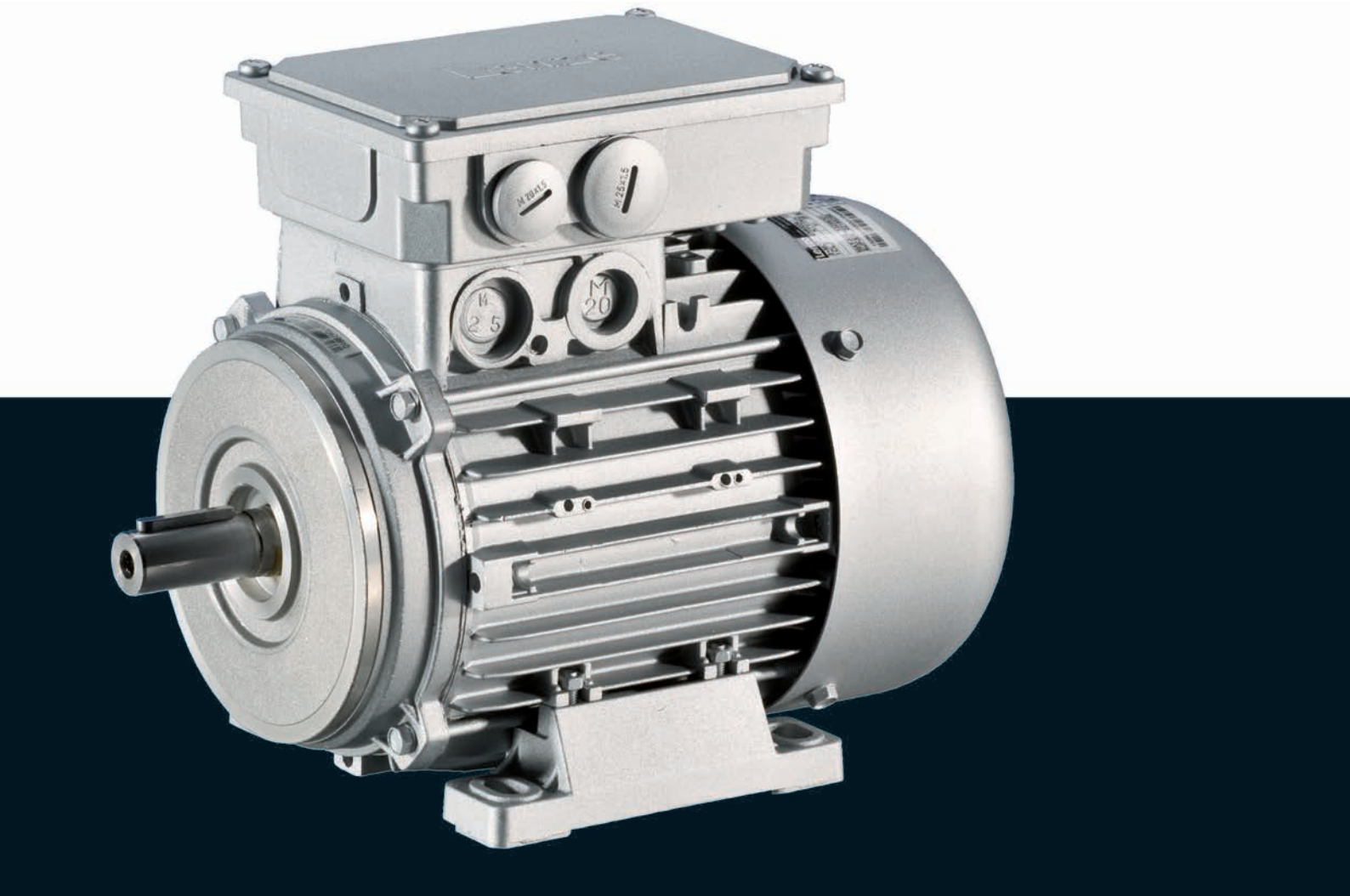

IE1 MD three-phase AC motors

Contents



General information	List of abbreviations	5.9 - 4
	Product key	5.9 - 5
	Product information	5.9 - 6
	Functions and features	5.9 - 7
	Motor – inverter assignment	5.9 - 11
	Dimensioning	5.9 - 13
Technical data	Standards and operating conditions	5.9 - 15
	Permissible radial and axial forces	5.9 - 16
	Rated data for 50 Hz	5.9 - 18
	Rated data for 60 Hz	5.9 - 20
	Rated data for 87 Hz	5.9 - 22
	Dimensions, self-ventilated (4-pole)	5.9 - 24
	Dimensions, forced ventilated (4-pole)	5.9 - 30
	Dimensions, 8400 motec inverter	5.9 - 36
Accessories	Spring-applied brake	5.9 - 39
	Resolver	5.9 - 51
	Incremental encoder and SinCos absolute value encoder	5.9 - 52
	Blower	5.9 - 53
	Temperature monitoring	5.9 - 55
	Terminal box	5.9 - 57
	Plug connectors	5.9 - 58
	ICN connector	5.9 - 58
	M12 connector	5.9 - 63
	HAN connector	5.9 - 64



List of abbreviations

$\eta_{100\,\%}$	[%]	Efficiency
$\eta_{75\,\%}$	[%]	Efficiency
$\eta_{50\,\%}$	[%]	Efficiency
cos ϕ		Power factor
I_N	[A]	Rated current
I_{max}	[A]	Max. current consumption
J	[kgcm²]	Moment of inertia
m	[kg]	Mass
M_a	[Nm]	Starting torque
M_b	[Nm]	Stalling torque
M_{max}	[Nm]	Max. torque
M_N	[Nm]	Rated torque
n_N	[r/min]	Rated speed
P_N	[kW]	Rated power
P_{max}	[kW]	Max. power input

U_{max}	[V]	Max. mains voltage
U_{min}	[V]	Min. mains voltage
$U_{N,\Delta}$	[V]	Rated voltage
$U_{N,Y}$	[V]	Rated voltage

CE	Communauté Européenne
CSA	Canadian Standards Association
DIN	Deutsches Institut für Normung e.V.
EMC	Electromagnetic compatibility
EN	European standard
IEC	International Electrotechnical Commission
IM	International Mounting Code
IP	International Protection Code
NEMA	National Electrical Manufacturers Association
UL	Underwriters Laboratory Listed Product
UR	Underwriters Laboratory Recognized Product
VDE	Verband deutscher Elektrotechniker (Association of German Electrical Engineers)
CCC	China Compulsory Certificate
EAC	Customs union Russia / Belarus / Kazakhstan certificate
cURus	Combined certification marks of UL for the USA and Canada
UkrSEPRO	Certificate for Ukraine



Product key

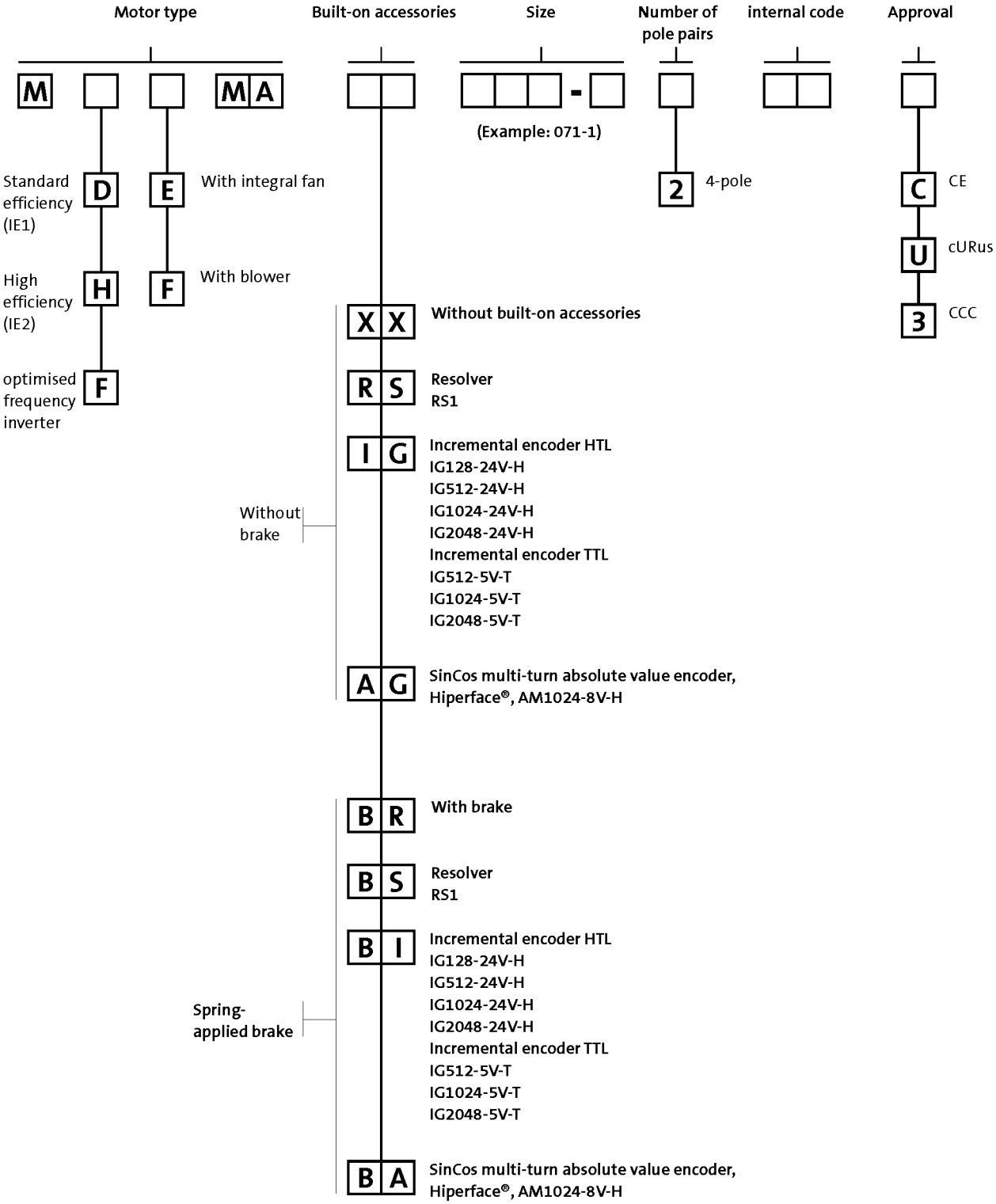
Motor type
Built-on accessories
Size
Number of pole pairs
internal code
Approval
M
MA
(Example: 071-1)
Standard efficiency (IE1)
D
E
With integral fan
High efficiency (IE2)
H
F
With blower
optimised frequency inverter
F
2
4-pole
C
CE
U
cURus
3
CCC
XX
Without built-on accessories
RS
Resolver
RS1
IG
Incremental encoder HTL
IG128-24V-H
IG512-24V-H
IG1024-24V-H
IG2048-24V-H
Incremental encoder TTL
IG512-5V-T
IG1024-5V-T
IG2048-5V-T
Without brake
AG
SinCos multi-turn absolute value encoder, Hiperface®, AM1024-8V-H
BR
With brake
BS
Resolver
RS1
BI
Incremental encoder HTL
IG128-24V-H
IG512-24V-H
IG1024-24V-H
IG2048-24V-H
Incremental encoder TTL
IG512-5V-T
IG1024-5V-T
IG2048-5V-T
Spring-applied brake
BA
SinCos multi-turn absolute value encoder, Hiperface®, AM1024-8V-H



Product information

For a long time now, three-phase AC motors from Lenze have been established in virtually all industrial sectors. Based on our many years of experience in the field of drive and automation technology, we have developed motors, which will ensure that your demands in terms of productivity, quality and availability are perfectly met.
Three-phase AC motors from the L-force series are primarily characterised by their comprehensive modularity. The wide variety of options allows you to precisely adjust the drive characteristics in line with your application. We call this Rightsizing.

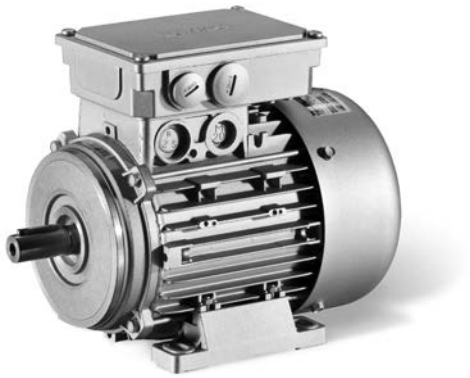

L-force MD three-phase AC motors are available in a power range from 0.12 to 22 kW and comply with efficiency class IE1 (standard efficiency) as per IEC 60034-30.

Basic versions
- The motors feature B3, B5 and B14 designs and dimensions standardised in line with IEC 60072-1 and/or DIN EN 50347 which makes then suitable for universal use.
- The thermal sensors integrated as standard allow for permanent temperature monitoring and are coordinated to the motor winding's temperature class F (155 °C).
- The motors of the basic version are adapted to ambient conditions by IP55 degree of protection .
- In tough operating conditions, the surface and corrosion protection system is provided to reliably protect the motor from aggresive media.

Options
- Various brake sizes – each available with several braking torques – can be combined with the three-phase AC motors.
- The LongLife version of the brake can easily reach 10 x 10^6 switching cycles.
- A resolver and various incremental and absolute value encoders can be fitted for speed and position detection.
- For fast commissioning, the motors are also available with connectors for the power connection, brake, blower and feedback.
- Instead of an integral fan, the motor can optionally be equipped with a blower. No torque reduction is then necessary, even at speeds below 20 Hz.
- For drive tasks in decentralised applications, the motor can be ordered with the motec inverter connected to the terminal box.
- The motors are available with cURus, GOST-R, CCC and UkrSepro approval.



Functions and features

Size					
Motor		063	071	080	090
Design		B3 B5 B14			
Shaft journal					
d x l	[mm]	11 x 23	14 x 30	19 x 40	24 x 50
Spring-applied brake					
Design		Standard or LongLife design Reduced or standard braking torque With rectifier With manual release lever Low noise		Standard or LongLife design Reduced, standard or increased braking torque With rectifier With manual release lever Low noise	
Feedback					
Design		Resolver Incremental encoder Absolute value encoder (multi-turn)			
Temperature sensor					
Thermal contact		TKO			
Thermal detector		KTY83-110 KTY84-130			
PTC thermistor		PTC			
Motor connection					
Power connection		Terminal box ICN connector HAN10E connector HAN modular connector			
Brake connection		Terminal box ICN connector HAN modular connector HAN10E connector			
Blower connection		Terminal box ICN connector			
Feedback connection		Terminal box ICN connector			
Temperature sensor connection		Terminal box TKO or PTC at connector in the power connection KTY at connector in the feedback connection			
Shaft bearings					
Position of the locating bearing		Standard motors (B3, B5, B14): side B Motors for gearbox direct mounting: side A			
Bearing type		Deep-groove ball bearing with high-temperature resistant grease, 2 sealing discs or cover plates			
Colour					
		Not coated Primed Paint in various corrosion-protection designs in accordance with RAL colours			



Functions and features

Size			
Motor		100	112
Design			
		B3 B5 B14	
Shaft journal			
d x l	[mm]	28 x 60	
Spring-applied brake			
Design		Standard or LongLife design Reduced, standard or increased braking torque With rectifier With manual release lever Low noise	Standard design Reduced, standard or increased braking torque With rectifier With manual release lever Low noise
Feedback			
Design		Resolver Incremental encoder Absolute value encoder (multi-turn)	
Temperature sensor			
Thermal contact		TKO	
Thermal detector		KTY83-110 KTY84-130	
PTC thermistor		PTC	
Motor connection			
Power connection		Terminal box ICN connector HAN10E connector HAN modular connector	
Brake connection		Terminal box ICN connector HAN modular connector HAN10E connector	
Blower connection		Terminal box ICN connector	
Feedback connection		Terminal box ICN connector	
Temperature sensor connection		Terminal box TKO or PTC at connector in the power connection KTY at connector in the feedback connection	
Shaft bearings			
Position of the locating bearing		Standard motors (B3, B5, B14): side B Motors for gearbox direct mounting: side A	
Bearing type		Deep-groove ball bearing with high-temperature resistant grease, 2 sealing discs or cover plates	
Colour			
		Not coated Primed Paint in various corrosion-protection designs in accordance with RAL colours	



Functions and features

Size				
Motor		132	160	180
Design				
		B3 B5		
Shaft journal				
d x l	[mm]	38 x 80	42 x 110	48 x 110
Spring-applied brake				
Design		Standard design Reduced, standard or increased braking torque With rectifier With manual release lever Low noise		
Feedback				
Design		Resolver Incremental encoder Absolute value encoder (multi-turn)		
Temperature sensor				
Thermal contact		TKO		
Thermal detector		KTY83-110 KTY84-130		
PTC thermistor		PTC		
Motor connection				
Power connection		Terminal box ICN connector HAN modular connector	Terminal box HAN modular connector	Terminal box
Brake connection		Terminal box ICN connector HAN modular connector	Terminal box HAN modular connector	Terminal box
Blower connection		Terminal box ICN connector		
Feedback connection		Terminal box ICN connector		
Temperature sensor connection		Terminal box TKO or PTC at connector in the power connection KTY at connector in the feedback connection		Terminal box
Shaft bearings				
Position of the locating bearing		Standard motors (B3, B5, B14): side B Motors for gearbox direct mounting: side A		
Bearing type		Deep-groove ball bearing with high-temperature resistant grease, 2 sealing discs or cover plates		
Colour				
		Not coated Primed Paint in various corrosion-protection designs in accordance with RAL colours		



Functions and features

Surface and corrosion protection

For optimum protection of three-phase AC motors against ambient conditions, the surface and corrosion protection system (OKS) offers tailor-made solutions.

Various surface coatings ensure that the motors operate reliably even at high air humidity, in outdoor installation or in the presence of atmospheric impurities. Any colour from the RAL Classic collection can be chosen for the top coat. The three-phase AC motors are also available unpainted (no surface and corrosion protection).

Surface and corrosion protection system	Applications	Measures
OKS-G (primed)	• Dependent on subsequent top coat applied	• 2K PUR priming coat (grey)
OKS-S (small)	• Standard applications • Internal installation in heated buildings • Air humidity up to 90%	• Surface coating corresponding to corrosivity category C1 (subject to EN 12944-2)
OKS-M (medium)	• Internal installation in non-heated buildings • Covered, protected external installation • Air humidity up to 95%	• Surface coating corresponding to corrosivity category C2 (subject to EN 12944-2)
OKS-L (high) OKS-XL (extra Large)	• External installation • Air humidity above 95% • Chemical industry plants • Food industry	• Surface coating corresponding to corrosivity category C3 (subject to EN 12944-2) • Blower cover and B end shield additionally primed • Screws zinc-coated • Cable glands with gaskets • Corrosion-resistant brake with cover ring, stainless friction plate, and chrome-plated armature plate (on request) Optional measures: • Motor recesses sealed off (on request)

Structure of surface coating

Surface and corrosion protection system	Corrosivity category	Surface coating	Colour
	DIN EN ISO 12944-2	Structure	
Without OKS (uncoated)			
OKS-G (primed)		2K PUR priming coat	
OKS-S (small)	Comparable to C1	2K-PUR top coat	Standard: RAL 7012 Optional: RAL Classic
OKS-M (medium)	Comparable to C2	2K PUR priming coat 2K-PUR top coat	
OKS-L (high) OKS-XL (extra Large)	Comparable to C3		



Motor – inverter assignment

Rated frequency 50/60 Hz

- Decentralised inverter 8400 motec (E84DVB)
- Inverter Drives 8400 (E84AV)

Rated power	Product key		
	Motor	Inverter	
P_N			
[kW]			
0.12	MD□□□□□□063-12		E84AV□□□2512□□0
0.18	MD□□□□□□063-32		
0.25	MD□□□□□□063-42 MD□□□□□□071-12		
0.37	MD□□□□□□071-32	E84DVB□3714S□□□2□	E84AV□□□3714□□0
0.55	MD□□□□□□071-42 MD□□□□□□080-12	E84DVB□5514S□□□2□	E84AV□□□5514□□0
0.75	MD□□□□□□080-32	E84DVB□7514S□□□2□	E84AV□□□7514□□0
1.10	MD□□□□□□080-42 MD□□□□□□090-12	E84DVB□1124S□□□2□	E84AV□□□1124□□0
1.50	MD□□□□□□090-32	E84DVB□1524S□□□2□	E84AV□□□1524□□0
2.20	MD□□□□□□100-12	E84DVB□2224S□□□2□	E84AV□□□2224□□0
3.00	MD□□□□□□100-32	E84DVB□3024S□□□2□	E84AV□□□3024□□0
4.00	MD□□□□□□112-22	E84DVB□4024S□□□2□	E84AV□□□4024□□0
5.50	MD□□□□□□132-12	E84DVB□5524S□□□2□	E84AV□□□5524□□0
7.50	MD□□□□□□132-22	E84DVB□7524S□□□2□	E84AV□□□7524□□0
11.0	MD□□□□□□160-22		E84AV□□□1134□□0
15.0	MD□□□□□□160-32		E84AV□□□1534□□0
18.5	MD□□□□□□180-12		E84AV□□□1834□□0
22.0	MD□□□□□□180-32		E84AV□□□2234□□0



Motor – inverter assignment

Rated frequency 87 Hz

- ► Decentralised inverter 8400 motec (E84DVB)
- ► Inverter Drives 8400 (E84AV)

Rated power	Product key		
	Motor	Inverter	
P_N			
[kW]			
0.21	MD□□□□□□063-12	E84DVB□5514S□□□2□	E84AV□□□5514□□0
0.33	MD□□□□□□063-32		
0.45	MD□□□□□□063-42 MD□□□□□□071-12		
0.66	MD□□□□□□071-32	E84DVB□7514S□□□2□	E84AV□□□7514□□0
1.00	MD□□□□□□071-42 MD□□□□□□080-12	E84DVB□1124S□□□2□	E84AV□□□1124□□0
1.35	MD□□□□□□080-32	E84DVB□1524S□□□2□	E84AV□□□1524□□0
2.00	MD□□□□□□080-42 MD□□□□□□090-12	E84DVB□2224S□□□2□	E84AV□□□2224□□0
2.70	MD□□□□□□090-32	E84DVB□3024S□□□2□	E84AV□□□3024□□0
3.90	MD□□□□□□100-12	E84DVB□4024S□□□2□	E84AV□□□4024□□0
5.40	MD□□□□□□100-32	E84DVB□5524S□□□2□	E84AV□□□5524□□0
7.10	MD□□□□□□112-22	E84DVB□7524S□□□2□	E84AV□□□7524□□0
9.70	MD□□□□□□132-12		E84AV□□□1134□□0
13.2	MD□□□□□□132-22		E84AV□□□1534□□0
19.3	MD□□□□□□160-22		E84AV□□□2234□□0
26.4	MD□□□□□□160-32		E84AV□□□3034□□0
32.4	MD□□□□□□180-12		E84AV□□□3734□□0



Dimensioning

Torque derating at low motor frequencies

The diagram shows the motor frame size-dependent torque reduction for self-ventilated motors, taking the thermal behaviour during actuation of the inverter into consideration.

Torque characteristics

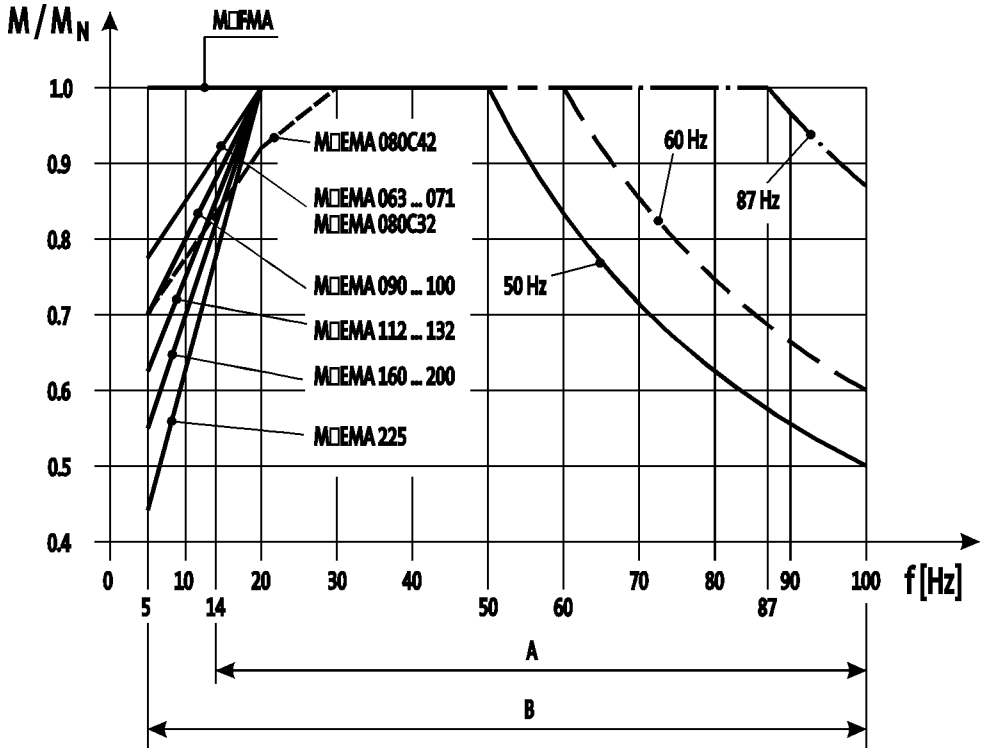

A = Operation with integral fan and brake
B = Operation with integral fan and brake control "Holding current reduction"

5.9

► The motor specifications stated in this catalogue for inverter operation apply to operation with a Lenze inverter. If you are uncertain, get in touch with the manufacturer of the inverter to ask whether the device is capable of driving the motor with the stated specifications (e.g. setting range, base frequency).

You can use the Drive Solution Designer for precise drive dimensioning.

The Drive Solution Designer helps you to carry out a fast and high-quality drive dimensioning.
The software includes well-founded and proven knowledge on drive applications and electro-mechanical drive components.

Please contact your Lenze sales office.





Standards and operating conditions

Degree of protection			
EN 60529			IP55 [1] IP65 [1] IP66 [1]
Energy efficiency class			
IEC 60034-30			IE1 [2]
IEC 60034-2-1			Methodology for measuring efficiency
Conformity			
CE			Low-Voltage Directive
			2006/95/EC
EAC			TP TC 004/2011 (TR CU 004/2011)
Approval			
			UkrSEPRO
CCC			GB Standard 12350-2009
CSA			CSA 22.2 No. 100
cURus [3]			UL 1004-1 UL 1004-8 Power Conversion Equipment (File-No. E210321)
Temperature class			
IEC/EN 60034-1; utilisation			B
IEC/EN 60034-1; insulation system (enamel-insulated wire)			F
Min. ambient operating temperature			
	$T_{opr,min}$	[°C]	-20
Max. ambient temperature for operation			
	$T_{opr,max}$	[°C]	40
With power reduction	$T_{opr,max}$	[°C]	60
Site altitude			
Amsl	H_{max}	[m]	4000
Max. speed			
	n_{max}	[r/min]	4500

[1] Designs with different degrees of protection:
IP55 with brake (IP54 with manual release lever).
IP54 with resolver RS1.
IP54 with HTL incremental encoder IG128-24V-H.
[2] Only applies to 4-pole motors.
[3] Motor frame size 225, in preparation.

► In the European Union, the ErP Directive stipulates minimum efficiency levels for three-phase AC motors. Geared three-phase AC motors that do not conform with this Directive do not meet CE requirements and must not be marketed in the European Economic Area. For further information about the ErP Directive and the Lenze products to which it relates, please refer to the brochure entitled "International efficiency directives for three-phase AC motors".



Permissible radial and axial forces

► Forces at medium speed 2000 r/min.

Application of forces

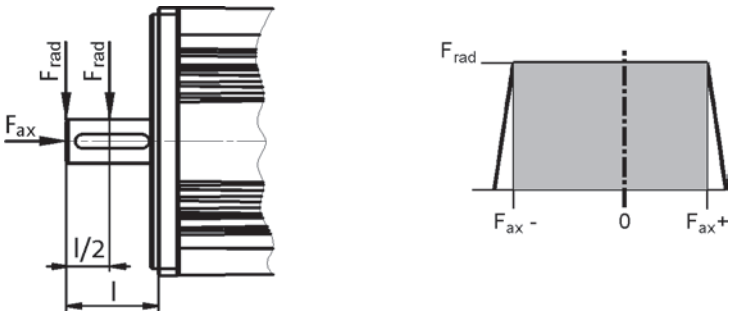

Application of force at l/2

Bearing service life L_{10}												
	10000 h			20000 h			30000 h			50000 h		
	F_{rad} [N]	$F_{ax,-}$ [N]	$F_{ax,+}$ [N]	F_{rad} [N]	$F_{ax,-}$ [N]	$F_{ax,+}$ [N]	F_{rad} [N]	$F_{ax,-}$ [N]	$F_{ax,+}$ [N]	F_{rad} [N]	$F_{ax,-}$ [N]	$F_{ax,+}$ [N]
063	600	-600	300	470	-480	180	410	-430	120	350	-370	70
071	740	-800	470	590	-630	300	510	-550	220	430	-470	140
080	960	-1090	580	770	-860	350	670	-760	250	570	-650	140
090	1050	-1160	630	840	-920	390	730	-800	280	620	-690	160
100	1490	-1490	910	1190	-1160	580	1050	-1010	430	890	-860	270
112	2250	-2330	1340	1790	-1830	840	1570	-1600	610	1330	-1360	370
132	3300	-2150	1190	2640	-1670	710	2320	-1440	480	1970	-1210	250
160	3750	-2700	1520	3000	-2130	950	2640	-1830	670	2250	-1440	360
180	5620	-3270	1790	4500	-2580	1120	3960	-2210	790	3375	-1750	420
200	5620	-3270	1790	4500	-2580	1120	3960	-2210	790	3375	-1750	420
225	5200	-3100	3900	3900	-2100	2900	3300	-1300	2100	2650	-1000	1800

► The values for the bearing service life L_{10} refer to an average speed of 2000 r/min. Depending on the ambient temperatures, the service life of the bearings is also reduced by the grease lifetime.
► Data for axial forces relate to the maximum radial force with the corresponding bearing service life.



Permissible radial and axial forces

► Forces at medium speed 2000 r/min.

Application of force at l

Bearing service life L_{10}												
	10000 h			20000 h			30000 h			50000 h		
	F_{rad} [N]	$F_{ax,-}$ [N]	$F_{ax,+}$ [N]	F_{rad} [N]	$F_{ax,-}$ [N]	$F_{ax,+}$ [N]	F_{rad} [N]	$F_{ax,-}$ [N]	$F_{ax,+}$ [N]	F_{rad} [N]	$F_{ax,-}$ [N]	$F_{ax,+}$ [N]
063	400	-600	300	370	-480	180	320	-430	120	300	-370	70
071	680	-800	470	540	-630	300	470	-550	220	400	-470	140
080	880	-1090	580	700	-860	350	610	-760	250	520	-650	140
090	940	-1160	630	750	-920	390	660	-800	280	560	-690	160
100	1350	-1490	910	1080	-1160	580	940	-1010	430	800	-860	270
112	2040	-2330	1340	1620	-1830	840	1420	-1600	610	1210	-1360	370
132	3020	-2150	1190	2420	-1670	710	2120	-1440	480	1800	-1210	250
160	3410	-2700	1520	2730	-2130	950	2400	-1830	670	2050	-1440	360
180	4550	-3270	1790	3640	-2580	1120	3200	-2210	790	2730	-1750	420
200	4550	-3270	1790	3640	-2580	1120	3200	-2210	790	2730	-1750	420
225	4800	-3100	3900	3600	-2100	2900	3000	-1300	2100	2400	-1000	1800

► The values for the bearing service life L_{10} refer to an average speed of 2000 r/min. Depending on the ambient temperatures, the service life of the bearings is also reduced by the grease lifetime.
► Data for axial forces relate to the maximum radial force with the corresponding bearing service life.



Rated data for 50 Hz

4-pole motors

	P_N	n_N	$U_{N,\Delta}$ [2]	$I_{N,\Delta}$	$U_{N,Y}$	$I_{N,Y}$	I_a/I_N
			± 10 %		± 10 %		
	[kW]	[r/min]	[V]	[A]	[V]	[A]	
MD□□□□□063-12	0.12	1425	230	0.85	400	0.49	3.10
MD□□□□□063-32	0.18	1365	230	1.00	400	0.58	2.70
MD□□□□□063-42	0.25	1370	230	1.40	400	0.82	2.90
MD□□□□□071-12	0.25	1370	230	1.30	400	0.75	2.90
MD□□□□□071-32	0.37	1410	230	1.60	400	0.95	3.30
MD□□□□□071-42	0.55	1405	230	2.40	400	1.40	3.50
MD□□□□□080-12	0.55	1390	230	2.50	400	1.40	3.80
MD□□□□□080-32	0.75	1410	230	3.30	400	1.90	4.60
MD□□□□□080-42	1.10	1390	230	4.80	400	2.80	4.40
MD□□□□□090-12	1.10	1390	230	4.80	400	2.80	4.10
MD□□□□□090-32	1.50	1410	230	6.60	400	3.80	4.80
MD□□□□□100-12	2.20	1440	230	9.20	400	5.30	6.00
MD□□□□□100-32	3.00	1430	230	12.5	400	7.20	4.60
MD□□□□□112-22	4.00	1450	230	16.1	400	9.30	6.20
MD□□□□□132-12	5.50	1450	230 400 [3]	20.2 11.7	400	11.7	4.00
MD□□□□□132-22	7.50	1455	230 400 [3]	28.6 16.5	400	16.5	5.90

	M_N	M_a	M_b	cos ϕ	$\eta_{75\,\%}$	$\eta_{100\,\%}$	J [1]	m [1]
	[Nm]	[Nm]	[Nm]		[%]	[%]	[kgcm²]	[kg]
MD□□□□□063-12	0.80	2.50	2.64	0.56	58.0	63.0	3.30	4.10
MD□□□□□063-32	1.26	2.50	2.61	0.70	63.0	64.0	3.30	4.10
MD□□□□□063-42	1.74	3.80	4.10	0.67	65.0	66.0	3.70	4.40
MD□□□□□071-12	1.74	3.10	3.10	0.75	65.0	66.0	8.30	5.80
MD□□□□□071-32	2.51	4.76	5.81	0.77	73.0	73.0	10.7	5.80
MD□□□□□071-42	3.74	7.85	9.12	0.77	74.0	74.0	12.8	6.40
MD□□□□□080-12	3.80	6.80	7.20	0.80	70.0	70.0	16.9	10.0
MD□□□□□080-32	5.10	11.0	12.1	0.80	73.0	74.0	26.0	11.0
MD□□□□□080-42	7.50	16.5	18.4	0.80	77.0	77.0	26.0	11.0
MD□□□□□090-12	7.56	15.5	16.0	0.81	75.0	75.0	23.2	12.0
MD□□□□□090-32	10.1	23.7	27.1	0.76	78.0	79.0	28.4	15.0
MD□□□□□100-12	14.6	38.0	44.0	0.73	83.0	84.0	61.0	24.0
MD□□□□□100-32	20.5	43.0	50.0	0.75	83.0	83.0	61.0	24.0
MD□□□□□112-22	26.3	70.0	95.0	0.73	85.0	86.0	107	31.0
MD□□□□□132-12	36.2	100	110	0.75	86.0	86.0	188	56.0
MD□□□□□132-22	49.2	100	150	0.76	87.0	88.0	336	66.0

[1] Without accessories
[2] Operation at 87 Hz is possible with 4-pole motors whose rated data at 50 Hz displays the voltage values Δ 230 V.
With motor frame sizes 132-12 to 180-32, the required voltage must also be specified in your order.
[3] Star/delta start-up possible at 400 V.



Rated data for 50 Hz

4-pole motors

	P_N	n_N	$U_{N,\Delta}$ [2]	$I_{N,\Delta}$	$U_{N,Y}$	$I_{N,Y}$	I_a/I_N
			± 10 %		± 10 %		
	[kW]	[r/min]	[V]	[A]	[V]	[A]	
MD□□□□□160-22	11.0	1460	230 400 [3]	36.5 21.0	400	21.0	7.00
MD□□□□□160-32	15.0	1460	230 400 [3]	48.4 27.8	400	27.8	7.10
MD□□□□□180-12	18.5	1470	230 400 [3]	57.8 32.8	400	32.8	6.80
MD□□□□□180-32	22.0	1465	230 400 [3]	67.4 38.8	400	38.8	7.30

	M_N	M_a	M_b	cos ϕ	$\eta_{75\,\%}$	$\eta_{100\,\%}$	J [1]	m [1]
	[Nm]	[Nm]	[Nm]		[%]	[%]	[kgcm²]	[kg]
MD□□□□□160-22	71.9	150	204	0.85	89.2	89.0	610	110
MD□□□□□160-32	98.1	214	288	0.87	89.7	90.0	750	130
MD□□□□□180-12	120	260	313	0.90	90.7	90.5	1350	165
MD□□□□□180-32	144	330	360	0.90	91.2	91.0	1550	175

[1] Without accessories
[2] Operation at 87 Hz is possible with 4-pole motors whose rated data at 50 Hz displays the voltage values Δ 230 V.
With motor frame sizes 132-12 to 180-32, the required voltage must also be specified in your order.
[3] Star/delta start-up possible at 400 V.



Rated data for 60 Hz

4-pole motors

	P_N	n_N	$U_{N,\Delta}$ [2]	$I_{N,\Delta}$	$U_{N,Y}$	$I_{N,Y}$	I_a/I_N
			± 10 %		± 10 %		
	[kW]	[r/min]	[V]	[A]	[V]	[A]	
MD□□□□□063-12	0.12	1735	265	0.69	460	0.40	4.00
MD□□□□□063-32	0.18	1695	265	0.80	460	0.46	3.60
MD□□□□□063-42	0.25	1680	265	1.30	460	0.75	3.80
MD□□□□□071-12	0.25	1680	265	1.10	460	0.65	3.30
MD□□□□□071-32	0.37	1720	265	1.50	460	0.84	3.90
MD□□□□□071-42	0.55	1720	265	2.10	460	1.20	4.10
MD□□□□□080-12	0.55	1700	265	2.10	460	1.20	4.30
MD□□□□□080-32	0.75	1720	265	2.90	460	1.70	5.60
MD□□□□□080-42	1.10	1705	265	4.20	460	2.40	5.40
MD□□□□□090-12	1.10	1700	265	4.20	460	2.40	4.50
MD□□□□□090-32	1.50	1720	265	5.80	460	3.40	5.70
MD□□□□□100-12	2.20	1745	265	8.10	460	4.70	6.90
MD□□□□□100-32	3.00	1740	265	10.8	460	6.30	5.30
MD□□□□□112-22	4.00	1755	265	14.1	460	8.20	6.90
MD□□□□□132-12	5.50	1755	265 460 [3]	17.5 10.1	460	10.1	4.50
MD□□□□□132-22	7.50	1760	265 460 [3]	25.7 14.8	460	14.8	6.50

	M_N	M_a	M_b	cos ϕ	$\eta_{75\,\%}$	$\eta_{100\,\%}$	J [1]	m [1]
	[Nm]	[Nm]	[Nm]		[%]	[%]	[kgcm²]	[kg]
MD□□□□□063-12	0.66	2.25	2.64	0.55	58.0	63.0	3.30	4.10
MD□□□□□063-32	1.00	2.21	2.56	0.68	65.0	66.0	3.30	4.10
MD□□□□□063-42	1.40	3.71	4.20	0.60	64.0	66.0	3.70	4.40
MD□□□□□071-12	1.40	2.80	2.80	0.73	67.0	68.0	8.30	5.80
MD□□□□□071-32	2.05	4.40	5.80	0.74	74.0	75.0	10.7	5.80
MD□□□□□071-42	3.05	7.00	9.00	0.73	76.0	77.0	12.8	6.40
MD□□□□□080-12	3.10	6.20	6.55	0.78	76.0	79.0	16.9	10.0
MD□□□□□080-32	4.16	10.3	12.2	0.78	78.0	78.0	26.0	11.0
MD□□□□□080-42	6.16	15.5	18.5	0.78	79.0	80.0	26.0	11.0
MD□□□□□090-12	6.18	14.0	14.5	0.75	78.0	79.0	23.2	12.0
MD□□□□□090-32	8.33	22.0	27.0	0.73	79.0	81.0	28.4	15.0
MD□□□□□100-12	12.0	33.0	43.0	0.71	83.0	85.0	61.0	24.0
MD□□□□□100-32	16.5	38.0	48.0	0.73	84.0	85.0	61.0	24.0
MD□□□□□112-22	21.8	57.0	89.0	0.72	85.0	87.0	107	31.0
MD□□□□□132-12	29.9	85.0	103	0.74	87.0	88.0	188	56.0
MD□□□□□132-22	40.7	83.0	137	0.75	88.0	89.0	336	66.0

[1] Without accessories
[2] Operation at 87 Hz is possible with 4-pole motors whose rated data at 60 Hz displays the voltage values Δ 265 V.
With motor frame sizes 132-12 to 180-32, the required voltage must also be specified in your order.
[3] Star/delta start-up possible at 460 V.



Rated data for 60 Hz

4-pole motors

	P_N	n_N	$U_{N,\Delta}$ [2]	$I_{N,\Delta}$	$U_{N,Y}$	$I_{N,Y}$	I_a/I_N
			± 10 %		± 10 %		
	[kW]	[r/min]	[V]	[A]	[V]	[A]	
MD□□□□□160-22	11.0	1770	265 460 [3]	31.7 18.3	460	18.3	7.60
MD□□□□□160-32	15.0	1760	265 460 [3]	40.7 23.5	460	23.5	7.60
MD□□□□□180-12	18.5	1780	265 460 [3]	48.5 28.0	460	28.0	7.20
MD□□□□□180-32	22.0	1760	265 460 [3]	57.2 33.0	460	33.0	7.60

	M_N	M_a	M_b	cos ϕ	$\eta_{75\,\%}$	$\eta_{100\,\%}$	J [1]	m [1]
	[Nm]	[Nm]	[Nm]		[%]	[%]	[kgcm²]	[kg]
MD□□□□□160-22	59.5	122	187	0.84	91.1	90.0	610	110
MD□□□□□160-32	81.2	171	265	0.87	92.6	92.0	750	130
MD□□□□□180-12	99.3	203	287	0.90	93.0	92.0	1350	165
MD□□□□□180-32	119	248	331	0.90	94.0	93.0	1550	175

[1] Without accessories
[2] Operation at 87 Hz is possible with 4-pole motors whose rated data at 60 Hz displays the voltage values Δ 265 V.
With motor frame sizes 132-12 to 180-32, the required voltage must also be specified in your order.
[3] Star/delta start-up possible at 460 V.



Rated data for 87 Hz

4-pole motors

	P_N	n_N	M_N	M_{max}	$U_{N,\Delta}$	$I_{N,\Delta}$	cos ϕ	$\eta_{75\,\%}$	$\eta_{100\,\%}$	J [1]	m [1]
					± 10 %						
	[kW]	[r/min]	[Nm]	[Nm]	[V]	[A]		[%]	[%]	[kgcm²]	[kg]
MD□□□□□063-12	0.21	2535	0.80	3.20	400	0.85	0.52	61.0	66.0	3.30	4.10
MD□□□□□063-32	0.33	2475	1.26	5.00	400	1.00	0.65	68.0	71.0	3.30	4.10
MD□□□□□063-42	0.45	2480	1.74	7.00	400	1.40	0.63	66.0	73.0	3.70	4.40
MD□□□□□071-12	0.45	2480	1.74	7.00	400	1.30	0.74	66.0	68.0	8.30	5.80
MD□□□□□071-32	0.66	2520	2.51	10.0	400	1.60	0.72	76.0	78.0	10.7	5.80
MD□□□□□071-42	1.00	2515	3.74	15.0	400	2.40	0.74	79.0	80.0	12.8	6.40
MD□□□□□080-12	1.00	2500	3.80	15.0	400	2.50	0.78	72.0	72.0	16.9	10.0
MD□□□□□080-32	1.35	2520	5.10	20.0	400	3.30	0.80	75.0	77.0	26.0	11.0
MD□□□□□080-42	2.00	2500	7.50	30.0	400	4.80	0.80	81.0	82.0	26.0	11.0
MD□□□□□090-12	2.00	2500	7.56	30.0	400	4.80	0.78	77.0	77.0	23.2	12.0
MD□□□□□090-32	2.70	2520	10.1	40.0	400	6.70	0.73	83.0	85.0	28.4	15.0
MD□□□□□100-12	3.90	2550	14.6	60.0	400	9.20	0.71	87.0	88.0	61.0	24.0
MD□□□□□100-32	5.40	2540	20.5	80.0	400	12.5	0.73	87.0	88.0	61.0	24.0
MD□□□□□112-22	7.10	2560	26.3	105	400	16.1	0.71	87.0	88.0	107	31.0
MD□□□□□132-12	9.70	2560	36.2	145	400	20.1	0.74	90.0	90.0	188	56.0
MD□□□□□132-22	13.2	2565	49.2	200	400	28.6	0.75	90.0	90.0	336	66.0
MD□□□□□160-22	19.3	2565	71.9	280	400	36.5	0.85	91.7	90.0	610	110
MD□□□□□160-32	26.4	2565	98.1	390	400	48.4	0.86	91.9	92.0	750	130
MD□□□□□180-12	32.4	2575	120	480	400	57.8	0.89	92.8	92.0	1350	165
MD□□□□□180-32	38.7	2560	144	572	400	67.4	0.89	92.8	92.0	1550	175

[1] Without accessories





Dimensions, self-ventilated (4-pole)

Design B3

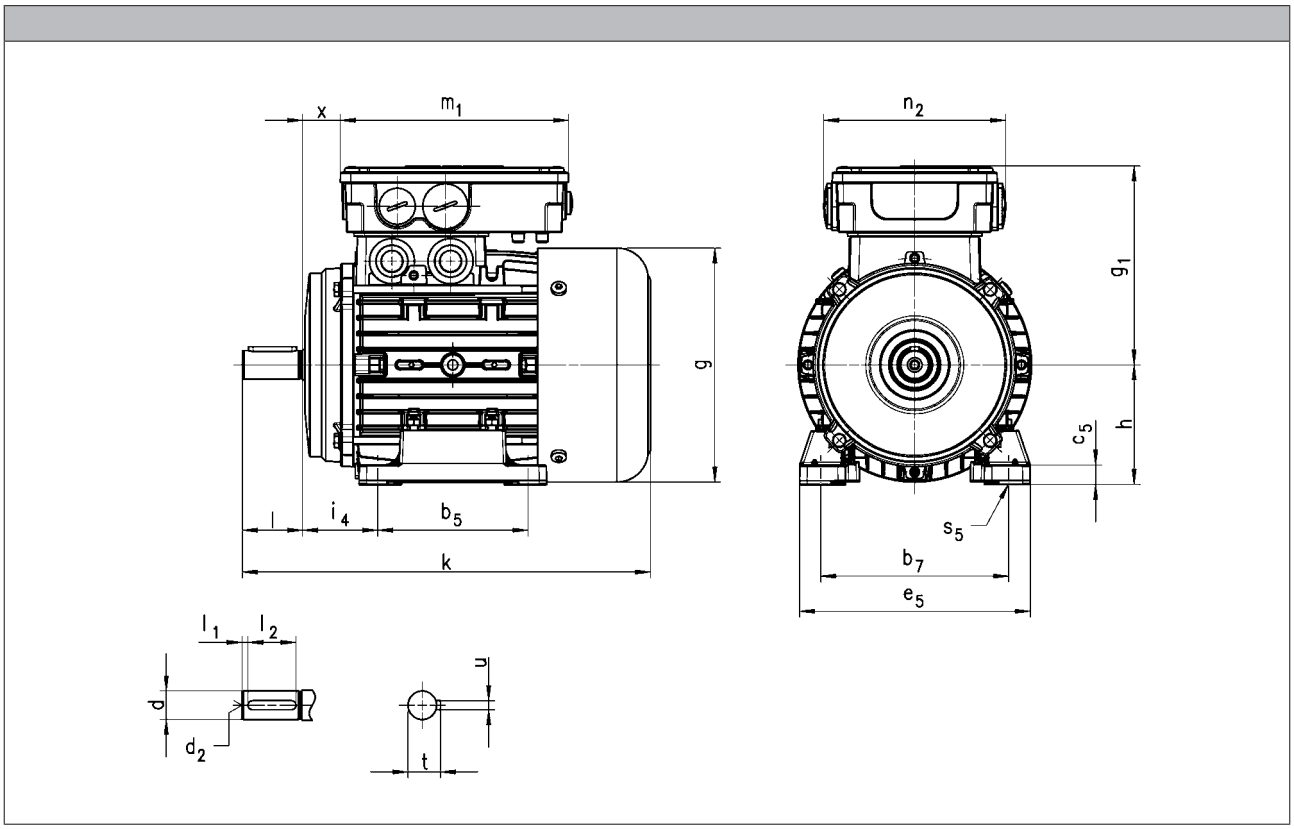

Motor type	MDEMAXX						MDEMABR					
	k	g	g_1	x	m_1	n_2	k	g	g_1	x	m_1	n_2
	[mm]	[mm]	[mm]	[mm]	[mm]	[mm]	[mm]	[mm]	[mm]	[mm]	[mm]	[mm]
063	215	123	109	17	136	103	271	123	109	17	136	103
071	246	139	118	24			297	139	118	24		
080	272	156	132	25	152	121	345	154	132	25	152	121
090	311	176	137	29			373	176	137	29		
100	382	194	147	36			463	194	147	36		
112	392	218	158	38			479	218	158	38		
132	497	258	187	51	194	125	576	258	187	51	194	125
160	598 [1]	310	220	69	253	152	703 [1]	313	220	69	253	152
	642 [2]						747 [2]					
180	671	348	239	75			784	351	239	75		

[1] 160-22
[2] 160-32



Dimensions, self-ventilated (4-pole)

Design B3

Motor type	MDEMARS MDEMAIG MDEMAAG						MDEMABS MDEMABI MDEMABA					
	k	g	g_1	x	m_1	n_2	k	g	g_1	x	m_1	n_2
	[mm]	[mm]	[mm]	[mm]	[mm]	[mm]	[mm]	[mm]	[mm]	[mm]	[mm]	[mm]
063	271	123	109	17	136	103	318	123	109	17	136	103
071	297	139	118	24			341	139	133	13	194	125
080	369	156	132	25	152	121	383	156	142	24		
090	392	178	137	29			410	176	147	28		
100	463	196	147	36			483	194	158	35		
112	472	220	158	38			512	218	168	37		
132	599	261	187	51	194	125	621	258	187	51		
160	681 [1]	313	220	69	253	152	789 [1]	313	220	69	253	152
	725 [2]						833 [2]					
180	750	351	239	75			863	351	239	75		

	d	d	d_2	l	l_1	l_2	t	u
	j6	k6						
	[mm]	[mm]	[mm]	[mm]	[mm]	[mm]	[mm]	[mm]
063	11		M4	23	3.5	16	12.5	4.0
071	14		M5	30	4.0	22	16.0	5.0
080	19		M6	40		32	21.5	6.0
090	24		M8	50	5.0	40	27.0	8.0
100	28		M10	60		50	31.0	
112								
132		38	M12	80		70	41.0	10.0
160		42	M16	110		100	45.0	12.0
180		48					51.5	14.0

	b_7	i_4	b_5	e_5	h	c_5	s_5
	[mm]	[mm]	[mm]	[mm]	[mm]	[mm]	[mm]
063	100	40	80	120	63	10	7.0
071	112	45	90	134	71	11	
080	125	50	100	154	80	13	10.0
090	140	56		174	90		
100	160	63	140	194	100	15	12.0
112	190	70		223	112	14	
132	216	89	178	260	132	18	
160	254	108	210 [1]	305	160	22	14.5
			254 [2]				
180	279	121	241 [3]	350	180	23	
			279 [4]				

[1] 160-22
[2] 160-32
[3] 180-12
[4] 180-32



Dimensions, self-ventilated (4-pole)

Design B5

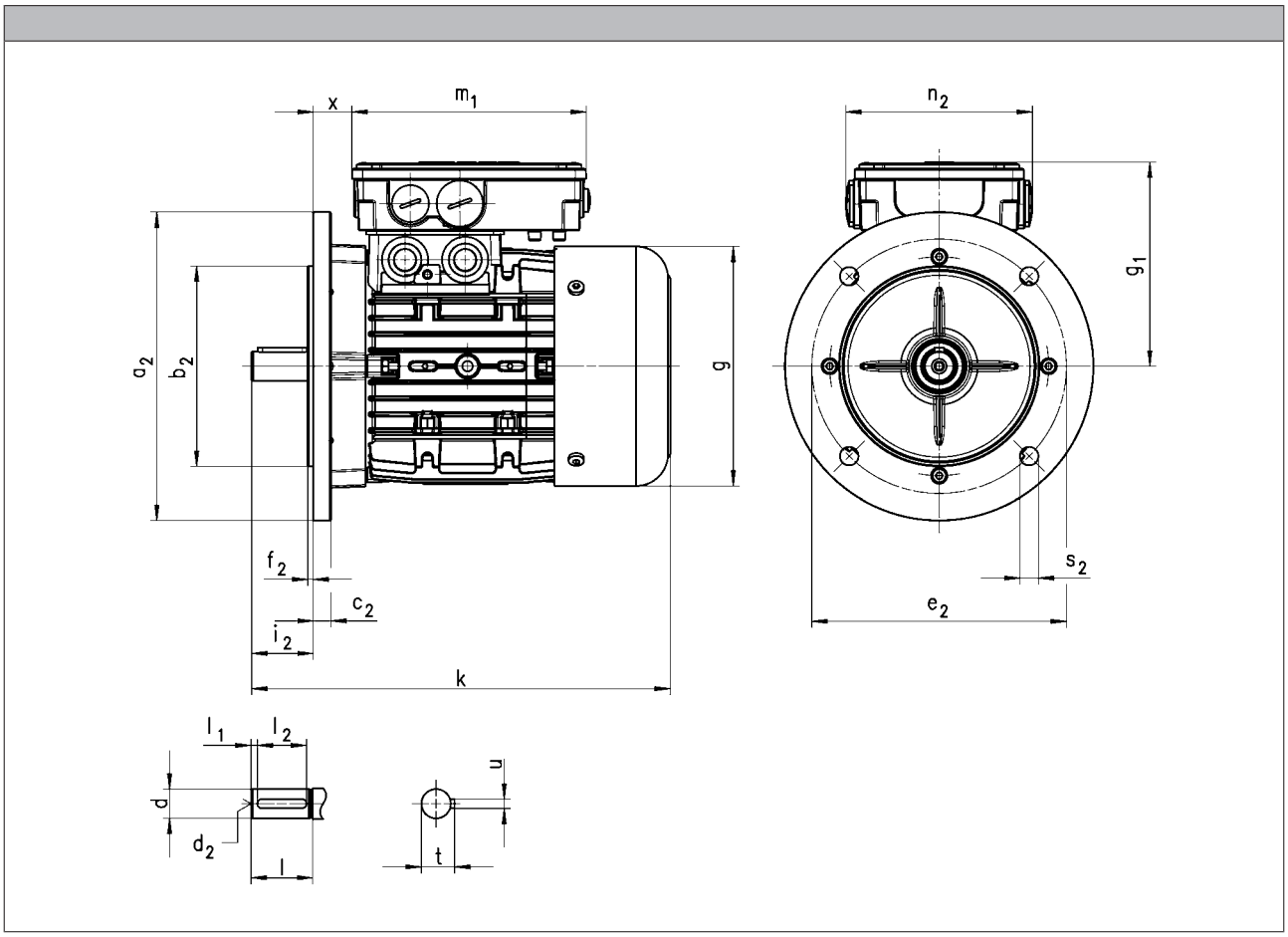

Motor type	MDEMAXX						MDEMABR					
	k	g	g_1	x	m_1	n_2	k	g	g_1	x	m_1	n_2
	[mm]	[mm]	[mm]	[mm]	[mm]	[mm]	[mm]	[mm]	[mm]	[mm]	[mm]	[mm]
063	215	123	109	17	136	103	271	123	109	17	136	103
071	246	139	118	24			297	139	118	24		
080	272	156	132	25	152	121	345	154	132	25	152	121
090	311	176	137	29			373	176	137	29		
100	382	194	147	36			463	194	147	36		
112	392	218	158	38			479	218	158	38		
132	497	258	187	51	194	125	576	258	187	51	194	125
160	598 [1]	310	220	69	253	152	703 [1]	313	220	69	253	152
	642 [2]						747 [2]					
180	671	348	239	75			784	351	239	75		

[1] 160-22
[2] 160-32



Dimensions, self-ventilated (4-pole)

Design B5

Motor type	MDEMARS MDEMAIG MDEMAAG						MDEMABS MDEMABI MDEMABA					
	k	g	g_1	x	m_1	n_2	k	g	g_1	x	m_1	n_2
	[mm]	[mm]	[mm]	[mm]	[mm]	[mm]	[mm]	[mm]	[mm]	[mm]	[mm]	[mm]
063	271	123	109	17	136	103	318	123	109	17	136	103
071	297	139	118	24			341	139	133	13	194	125
080	369	156	132	25	152	121	383	156	142	24		
090	392	178	137	29			410	176	147	28		
100	463	196	147	36			483	194	158	35		
112	472	220	158	38			512	218	168	37		
132	599	261	187	51	194	125	621	258	187	51		
160	681 [1]	313	220	69	253	152	789 [1]	313	220	69	253	152
	725 [2]						833 [2]					
180	750	351	239	75			863	351	239	75		

[1] 160-22
[2] 160-32

	d	d	d_2	l	l_1	l_2	t	u
	j6	k6						
	[mm]	[mm]	[mm]	[mm]	[mm]	[mm]	[mm]	[mm]
063	11		M4	23	3.5	16	12.5	4.0
071	14		M5	30	4.0	22	16.0	5.0
080	19		M6	40		32	21.5	6.0
090	24		M8	50	5.0	40	27.0	8.0
100	28		M10	60		50	31.0	
112								
132		38	M12	80		70	41.0	10.0
160		42	M16	110		100	45.0	12.0
180		48					51.5	14.0

	Flange size							
		a_2	b_2	c_2	e_2	f_2	s_2	i_2
			j6					-0.6 ... 0.5
		[mm]	[mm]	[mm]	[mm]	[mm]	[mm]	[mm]
063	FF115	140	95	10	115	3.0	10.0	23.0
071	FF130	160	110		130	3.5		30.0
080	FF165	200	130	11	165		12.0	40.0
090								50.0
100	FF215	250	180	15	215	4.0	14.5	60.0
112								
132	FF265	300	230	20	265			80.0
160	FF300	350	250	13	300	5.0	18.5	110
180								



Dimensions, self-ventilated (4-pole)

Design B14

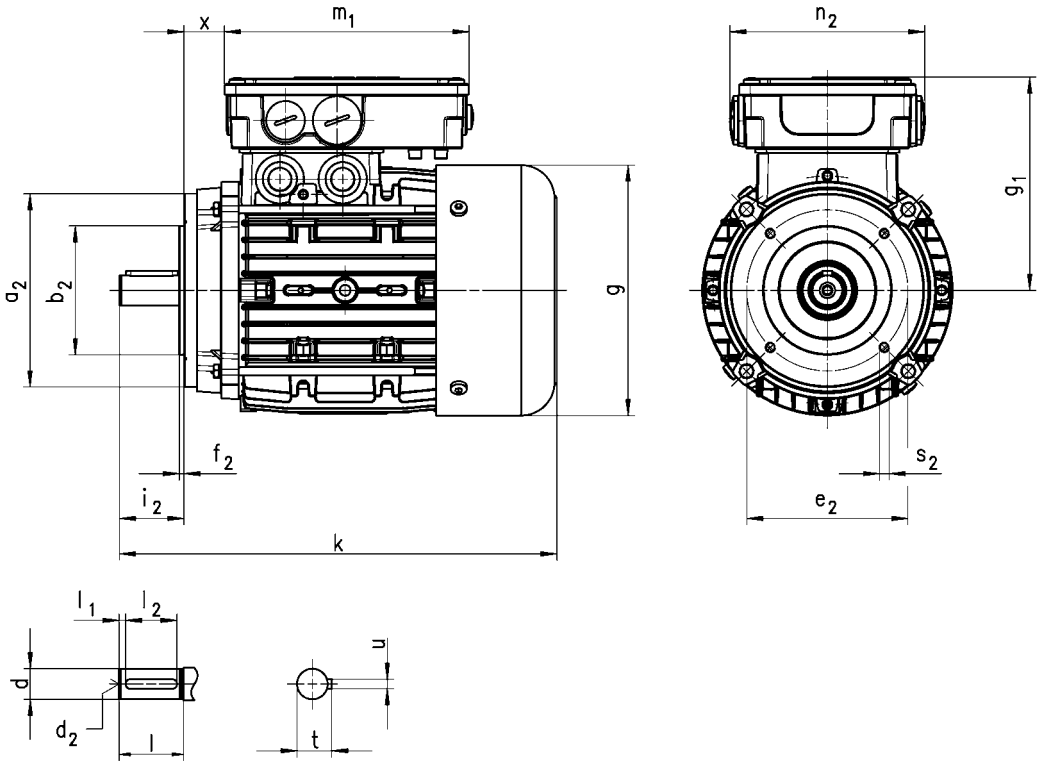

Motor type	MDEMAXX						MDEMABR					
	k	g	g_1	x	m_1	n_2	k	g	g_1	x	m_1	n_2
	[mm]	[mm]	[mm]	[mm]	[mm]	[mm]	[mm]	[mm]	[mm]	[mm]	[mm]	[mm]
063	215	123	109	17	136	103	271	123	109	17	136	103
071	246	139	118	24			297	139	118	24		
080	272	156	132	25	152	121	345	154	132	25	152	121
090	311	176	137	29			373	176	137	29		
100	382	194	147	36			463	194	147	36		
112	392	218	158	38			479	218	158	38		



Dimensions, self-ventilated (4-pole)

Design B14

Motor type	MDEMARS MDEMAIG MDEMAAG						MDEMABS MDEMABI MDEMABA					
	k	g	g_1	x	m_1	n_2	k	g	g_1	x	m_1	n_2
	[mm]	[mm]	[mm]	[mm]	[mm]	[mm]	[mm]	[mm]	[mm]	[mm]	[mm]	[mm]
063	271	123	109	17	136	103	318	123	109	17	136	103
071	297	139	118	24			341	139	133	13	194	125
080	369	156	132	25	152	121	383	156	142	24		
090	392	178	137	29			410	176	147	28		
100	463	196	147	36			483	194	158	35		
112	472	220	158	38			512	218	168	37		

	d	d	d_2	l	l_1	l_2	t	u
	j6	k6						
	[mm]	[mm]	[mm]	[mm]	[mm]	[mm]	[mm]	[mm]
063	11		M4	23	3.5	16	12.5	4.0
071	14		M5	30	4.0	22	16.0	5.0
080	19		M6	40		32	21.5	6.0
090	24		M8	50	5.0	40	27.0	8.0
100	28		M10	60		50	31.0	
112								

	Flange size							
		a_2	b_2	e_2	f_2	s_2	i_2	
			j6				-0.6 ... 0.5	
		[mm]	[mm]	[mm]	[mm]	[mm]	[mm]	
063	FT75	90	60	75	2.5	M5x10	23.0	
071	FT85	105	70	85		M6x10	30.0	
080	FT100	120	80	100	3.0	M6x12	40.0	
	FT130	160	110	130	3.5	M8x14		
090	FT115	140	95	115	3.0	M8x16	50.0	
	FT130	160	110	130	3.5			
100						M8x14	60.0	
112						M8x16		



Dimensions, forced ventilated (4-pole)

Design B3

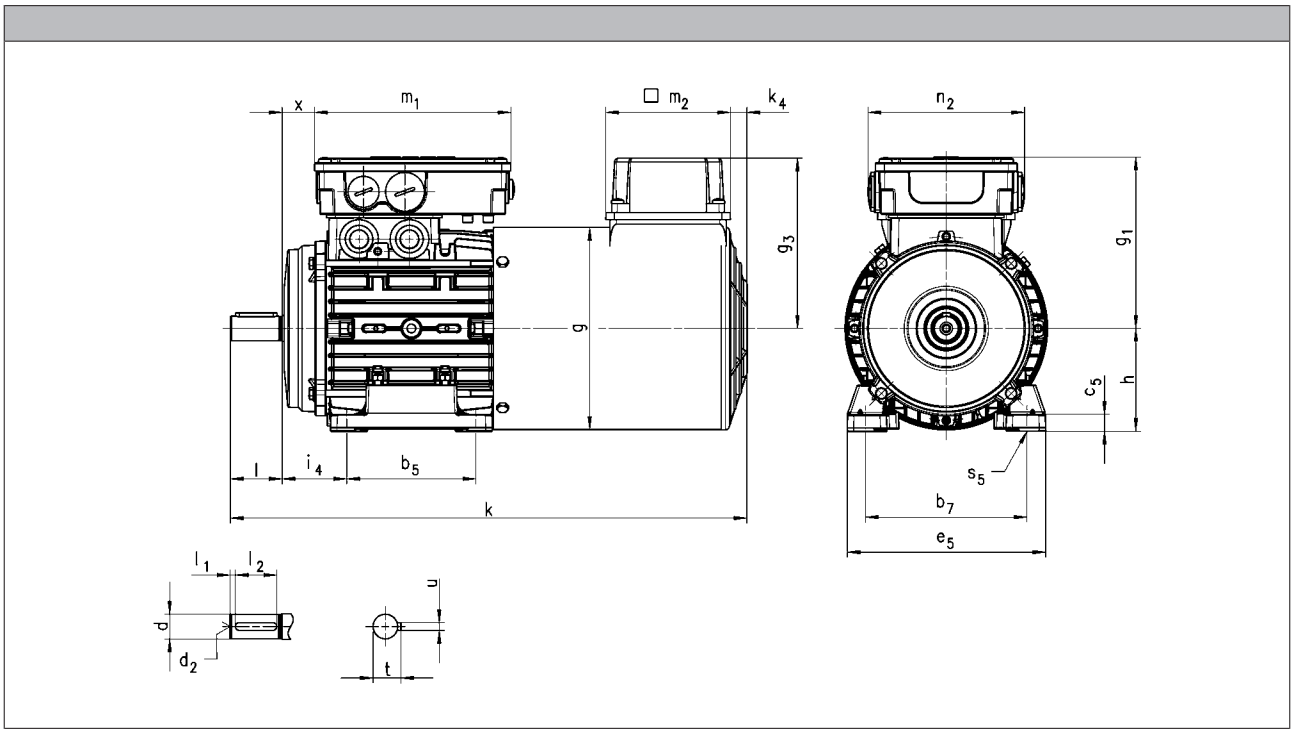

Motor type	MDFMAXX									MDFMABR								
	k	g	g_1	x	m_1	n_2	g_3	k_4	m_2	k	g	g_1	x	m_1	n_2	g_3	k_4	m_2
	[mm]	[mm]	[mm]	[mm]	[mm]	[mm]	[mm]	[mm]	[mm]	[mm]	[mm]	[mm]	[mm]	[mm]	[mm]	[mm]	[mm]	[mm]
063	345	123	109	17	136	103	115	12	95	385	123	109	17	136	103	115	12	95
071	373	138	118	24			122			410	138	118	24			122		
080	400	156	132	25	152	121	132	13	96	455	156	132	25	152	121	132	13	96
090	434	176	137	29			141	22	95	487	176	137	29			141	22	95
100	491	194	147	36			150			552	194	147	36			150		
112	494	218	158	38			162			575	218	158	38			162		
132	612	257	187	51	194	125	182	32		698	257	187	51	194	125	182	32	
160	747 [1]	309	220	69	253	152	209	31	96	777 [1]	309	220	69	253	152	209	31	96
	791 [2]									821 [2]								
180	820	348	239	75						886	348	239	75					

[1] 160-22
[2] 160-32

5.9



Dimensions, forced ventilated (4-pole)

Design B3

Motor type	MDFMARS MDFMAIG MDFMAAG									MDFMABS MDFMABI MDFMABA								
	k	g	g_1	x	m_1	n_2	g_3	k_4	m_2	k	g	g_1	x	m_1	n_2	g_3	k_4	m_2
	[mm]	[mm]	[mm]	[mm]	[mm]	[mm]	[mm]	[mm]	[mm]	[mm]	[mm]	[mm]	[mm]	[mm]	[mm]	[mm]	[mm]	[mm]
063	345	123	109	17	136	103	115	12	95	385	123	109	17	136	103	115	12	95
071	373	138	118	24			122			410	138	133	13	194	125	122		
080	400	156	132	25	152	121	132	13	96	455	156	142	24			132	13	96
090	434	176	137	29			141	22	95	487	176	147	28			141	22	95
100	491	194	147	36			150			552	194	158	35			150		
112	575	218	158	38			162			575	218	168	37			162		
132	698	257	187	51	194	125	182	32		698	257	187	51			182	32	
160	822 [1]	309	220	69	253	152	209	31	96	835 [1]	309	220	69	253	152	209	31	96
	866 [2]									877 [2]								
180	886	348	239	75						946	348	239	75					

	d	d	d_2	l	l_1	l_2	t	u
	j6	k6						
	[mm]	[mm]	[mm]	[mm]	[mm]	[mm]	[mm]	[mm]
063	11		M4	23	3.5	16	12.5	4.0
071	14		M5	30	4.0	22	16.0	5.0
080	19		M6	40		32	21.5	6.0
090	24		M8	50	5.0	40	27.0	8.0
100	28		M10	60		50	31.0	
112								
132		38	M12	80		70	41.0	10.0
160		42	M16	110		100	45.0	12.0
180		48					51.5	14.0

	b_7	i_4	b_5	e_5	h	c_5	s_5
	[mm]	[mm]	[mm]	[mm]	[mm]	[mm]	[mm]
063	100	40	80	120	63	10	7.0
071	112	45	90	134	71	11	
080	125	50	100	154	80	13	10.0
090	140	56		174	90		
100	160	63	140	194	100	15	12.0
112	190	70		223	112	14	
132	216	89	178	260	132	18	
160	254	108	210 [1]	305	160	22	14.5
			254 [2]				
180	279	121	241 [3]	350	180	23	
			279 [4]				

[1] 160-22
[2] 160-32
[3] 180-12
[4] 180-32



Dimensions, forced ventilated (4-pole)

Design B5

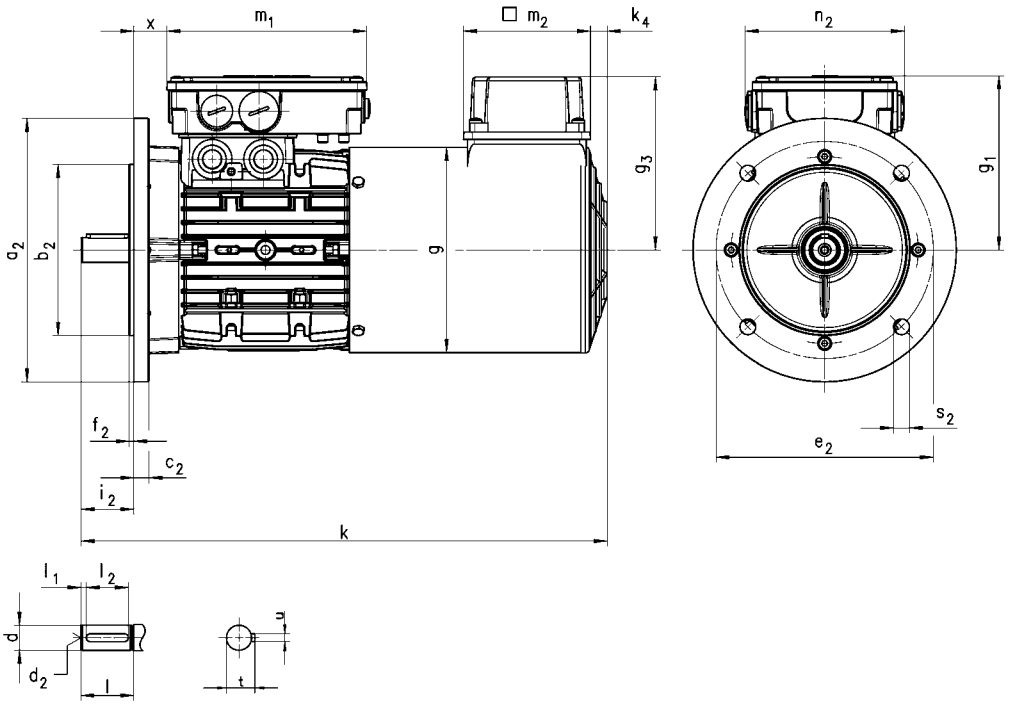

Motor type	MDFMAXX									MDFMABR								
	k	g	g_1	x	m_1	n_2	g_3	k_4	m_2	k	g	g_1	x	m_1	n_2	g_3	k_4	m_2
	[mm]	[mm]	[mm]	[mm]	[mm]	[mm]	[mm]	[mm]	[mm]	[mm]	[mm]	[mm]	[mm]	[mm]	[mm]	[mm]	[mm]	[mm]
063	345	123	109	17	136	103	115	12	95	385	123	109	17	136	103	115	12	95
071	373	138	118	24			122			410	138	118	24			122		
080	400	156	132	25	152	121	132	13	96	455	156	132	25	152	121	132	13	96
090	434	176	137	29			141	22	95	487	176	137	29			141	22	95
100	491	194	147	36			150			552	194	147	36			150		
112	494	218	158	38			162			575	218	158	38			162		
132	612	257	187	51	194	125	182	32		698	257	187	51	194	125	182	32	
160	747 [1]	309	220	69	253	152	209	31	96	777 [1]	309	220	69	253	152	209	31	96
	791 [2]									821 [2]								
180	820	348	239	75						886	348	239	75					

[1] 160-22
[2] 160-32



Dimensions, forced ventilated (4-pole)

Design B5

Motor type	MDFMARS MDFMAIG MDFMAAG									MDFMABS MDFMABI MDFMABA								
	k	g	g_1	x	m_1	n_2	g_3	k_4	m_2	k	g	g_1	x	m_1	n_2	g_3	k_4	m_2
	[mm]	[mm]	[mm]	[mm]	[mm]	[mm]	[mm]	[mm]	[mm]	[mm]	[mm]	[mm]	[mm]	[mm]	[mm]	[mm]	[mm]	[mm]
063	345	123	109	17	136	103	115	12	95	385	123	109	17	136	103	115	12	95
071	373	138	118	24			122			410	138	133	13	194	125	122		
080	400	156	132	25	152	121	132	13	96	455	156	142	24			132	13	96
090	434	176	137	29			141	22	95	487	176	147	28			141	22	95
100	491	194	147	36			150			552	194	158	35			150		
112	575	218	158	38			162			575	218	168	37			162		
132	698	257	187	51	194	125	182	32		698	257	187	51			182	32	
160	822 [1]	309	220	69	253	152	209	31	96	835 [1]	309	220	69	253	152	209	31	96
	866 [2]									877 [2]								
180	886	348	239	75						946	348	239	75					

[1] 160-22
[2] 160-32

	d	d	d_2	l	l_1	l_2	t	u
	j6	k6						
	[mm]	[mm]	[mm]	[mm]	[mm]	[mm]	[mm]	[mm]
063	11		M4	23	3.5	16	12.5	4.0
071	14		M5	30	4.0	22	16.0	5.0
080	19		M6	40		32	21.5	6.0
090	24		M8	50	5.0	40	27.0	8.0
100	28		M10	60		50	31.0	
112								
132		38	M12	80		70	41.0	10.0
160		42	M16	110		100	45.0	12.0
180		48					51.5	14.0

	Flange size							
		a_2	b_2	c_2	e_2	f_2	s_2	i_2
			j6					-0.6 ... 0.5
		[mm]	[mm]	[mm]	[mm]	[mm]	[mm]	[mm]
063	FF115	140	95	10	115	3.0	10.0	23.0
071	FF130	160	110		130	3.5		30.0
080	FF165	200	130	11	165		12.0	40.0
090								50.0
100	FF215	250	180	15	215	4.0	14.5	60.0
112								
132	FF265	300	230	20	265			80.0
160	FF300	350	250	13	300	5.0	18.5	110
180								



Dimensions, forced ventilated (4-pole)

Design B14

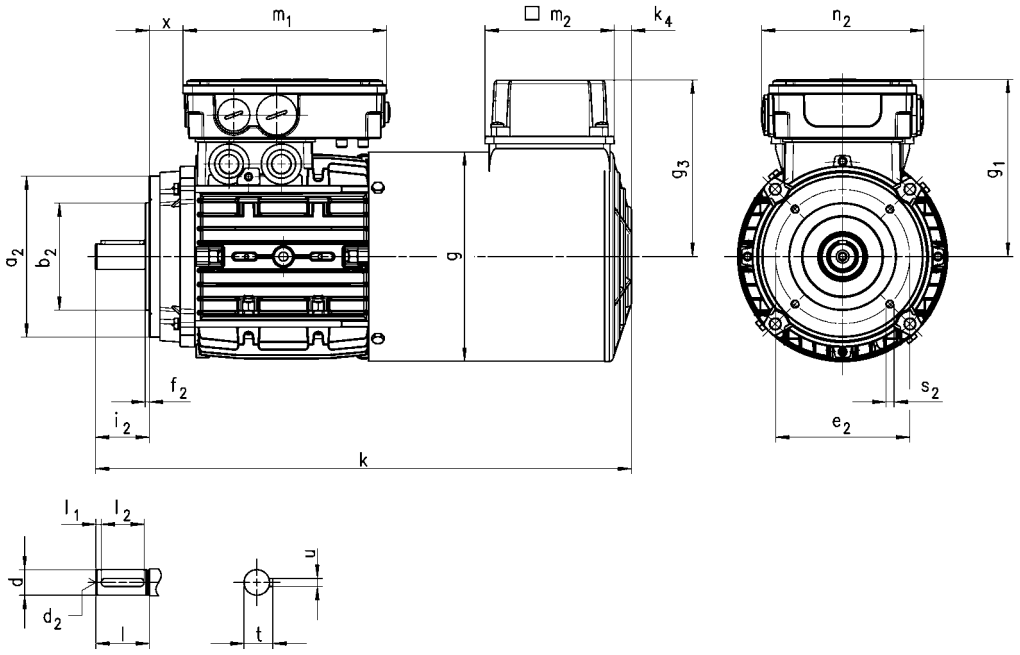

Motor type	MDFMAXX									MDFMABR								
	k	g	g_1	x	m_1	n_2	g_3	k_4	m_2	k	g	g_1	x	m_1	n_2	g_3	k_4	m_2
	[mm]	[mm]	[mm]	[mm]	[mm]	[mm]	[mm]	[mm]	[mm]	[mm]	[mm]	[mm]	[mm]	[mm]	[mm]	[mm]	[mm]	[mm]
063	345	123	109	17	136	103	115	12	95	385	123	109	17	136	103	115	12	95
071	373	138	118	24			122			410	138	118	24			122		
080	400	156	132	25	152	121	132	13	96	455	156	132	25	152	121	132	13	96
090	434	176	137	29			141	22	95	487	176	137	29			141	22	95
100	491	194	147	36			150			552	194	147	36			150		
112	494	218	158	38			162			575	218	158	38			162		

5.9



Dimensions, forced ventilated (4-pole)

Design B14

Motor type	MDFMARS MDFMAIG MDFMAAG									MDFMABS MDFMABI MDFMABA								
	k	g	g_1	x	m_1	n_2	g_3	k_4	m_2	k	g	g_1	x	m_1	n_2	g_3	k_4	m_2
	[mm]	[mm]	[mm]	[mm]	[mm]	[mm]	[mm]	[mm]	[mm]	[mm]	[mm]	[mm]	[mm]	[mm]	[mm]	[mm]	[mm]	[mm]
063	345	123	109	17	136	103	115	12	95	385	123	109	17	136	103	115	12	95
071	373	138	118	24			122			410	138	133	13	194	125	122		
080	400	156	132	25	152	121	132	13	96	455	156	142	24			132	13	96
090	434	176	137	29			141	22	95	487	176	147	28			141	22	95
100	491	194	147	36			150			552	194	158	35			150		
112	575	218	158	38			162			575	218	168	37			162		

	d	d	d_2	l	l_1	l_2	t	u
	j6	k6						
	[mm]	[mm]	[mm]	[mm]	[mm]	[mm]	[mm]	[mm]
063	11		M4	23	3.5	16	12.5	4.0
071	14		M5	30	4.0	22	16.0	5.0
080	19		M6	40		32	21.5	6.0
090	24		M8	50	5.0	40	27.0	8.0
100	28		M10	60		50	31.0	
112								

	Flange size						
		a_2	b_2	e_2	f_2	s_2	i_2
			j6				-0.6 ... 0.5
		[mm]	[mm]	[mm]	[mm]	[mm]	[mm]
063	FT75	90	60	75	2.5	M5x10	23.0
071	FT85	105	70	85		M6x10	30.0
080	FT100	120	80	100	3.0	M6x12	40.0
	FT130	160	110	130	3.5	M8x14	
090	FT115	140	95	115	3.0	M8x16	50.0
	FT130	160	110	130	3.5		
100						M8x14	60.0
112						M8x16	



Dimensions, 8400 motec inverter

Rated frequency 50/60 Hz

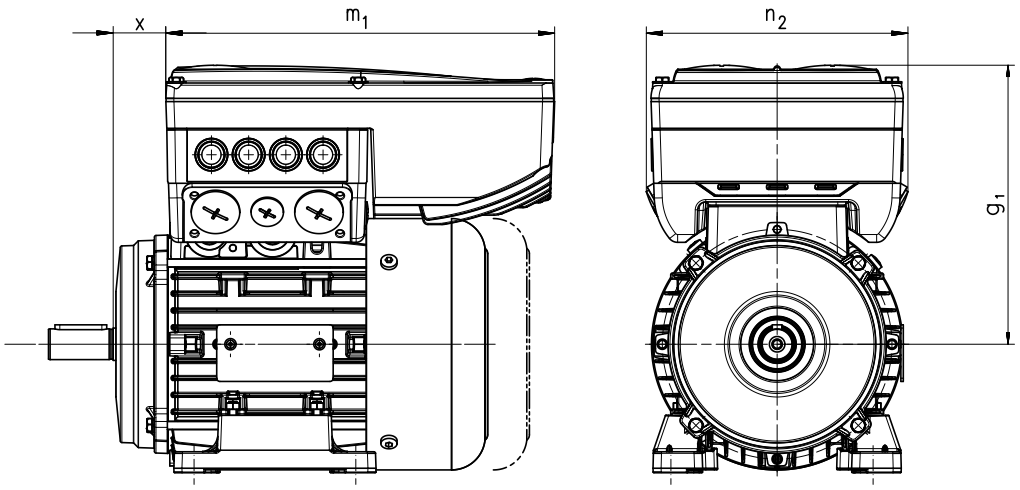

Product key					
Motor	Inverter				
		$g_{1,\ 50Hz}$	$m_{1,\ 50Hz}$	$n_{2,\ 50Hz}$	x_{50Hz}
		[mm]	[mm]	[mm]	[mm]
MD□□□□□071-32	E84DVB□3714S□□□2□	163	241	161	29.5
MD□□□□□071-42	E84DVB□5514S□□□2□				
MD□□□□□080-12		172			32.5
MD□□□□□080-32	E84DVB□7514S□□□2□				
MD□□□□□080-42	E84DVB□1124S□□□2□				
MD□□□□□090-12		177			36.2
MD□□□□□090-32	E84DVB□1524S□□□2□				
MD□□□□□100-12	E84DVB□2224S□□□2□	217	260	176	42.4
MD□□□□□100-32	E84DVB□3024S□□□2□				
MD□□□□□112-22	E84DVB□4024S□□□2□	282	325	195	32.0
MD□□□□□132-12	E84DVB□5524S□□□2□	301			47.5
MD□□□□□132-22	E84DVB□7524S□□□2□				

5.9



Dimensions, 8400 motec inverter

Rated frequency 87 Hz

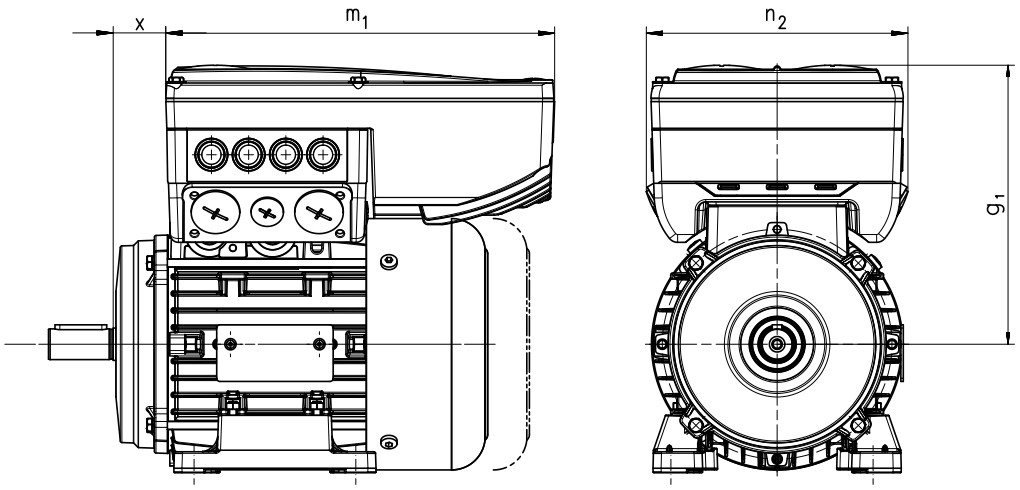

Product key					
Motor	Inverter				
		$g_{1,\ 87Hz}$	$m_{1,\ 87Hz}$	$n_{2,\ 87Hz}$	x_{87Hz}
		[mm]	[mm]	[mm]	[mm]
MD□□□□□□063-32	E84DVB□3714S□□□2□	154	241	161	23.5
MD□□□□□□063-42	E84DVB□5514S□□□2□				
MD□□□□□□071-12		163			29.5
MD□□□□□□071-32	E84DVB□7514S□□□2□				
MD□□□□□□071-42	E84DVB□1124S□□□2□				
MD□□□□□□080-12		172			32.5
MD□□□□□□080-32	E84DVB□1524S□□□2□				
MD□□□□□□080-42	E84DVB□2224S□□□2□	201	260	176	31.5
MD□□□□□□090-12		206			35.2
MD□□□□□□090-32	E84DVB□3024S□□□2□				
MD□□□□□□100-12	E84DVB□4024S□□□2□	272	325	195	29.9
MD□□□□□□100-32	E84DVB□5524S□□□2□				
MD□□□□□□112-22	E84DVB□7524S□□□2□	282			32.0





Spring-applied brake

Three-phase AC motors can be fitted with a spring-applied brake. This is activated after the supply voltage is switched off (closed-circuit principle). For optimum adjustment of the brake motor to the application, a range of braking torques and control modes is available for every motor frame size. For applications with very high operating frequencies the brake is also available in a LongLife version, with reinforced mechanical brake components.

Features

Versions
- **Standard**
  - 1 x 10^6 repeating switching cycles
  - 1 x 10^6 reversing switching cycles
- **LongLife**
  - 10 x 10^6 repeating switching cycles
  - 15 x 10^6 reversing switching cycles

Control
- DC supply
- AC supply via rectifier in the terminal box

Degree of protection
- Without manual release IP55
- With manual release IP54

Friction lining
- Non-asbestos, low wearing

Options
- Manual release
- UL/CSA approval
- Noise-reduced

Assignment of 4-pole motors and brakes

Design	Standard		LongLife	
Motor frame size	Size	Rated torque	Size	Rated torque
	Brake		Brake	
		M_k		M_k
		[Nm]		[Nm]
063-02 063-12 063-22 063-32 063-42	06 06	2.50 4.00	06	4.00
071-12 071-32	06 06 08	2.50 4.00 3.50	06 08	4.00 3.50
071-42	06 06 08 08	2.50 4.00 3.50 8.00	06 08 08	4.00 3.50 8.00
080-12 080-32	08 08 10	3.50 8.00 7.00	08 10	8.00 7.00
080-42	08 08 10 10	3.50 8.00 7.00 16.0	08 10 10	8.00 7.00 16.0



Spring-applied brake

Assignment of 4-pole motors and brakes

Design	Standard		LongLife	
Motor frame size	Size Brake	Rated torque M_k [Nm]	Size Brake	Rated torque M_k [Nm]
090-12 090-32	08 08 10 10 10	3.50 8.00 7.00 16.0 23.0	08 10 10	8.00 7.00 16.0
100-12	10 10 12 12	7.00 16.0 14.0 32.0	10 12 12	16.0 14.0 32.0
100-32	10 10 12 12 12	7.00 16.0 14.0 32.0 46.0		
112-22 112-32	12 12 14 14	14.0 32.0 35.0 60.0		
132-12	14 14 16 16	35.0 60.0 60.0 80.0		
132-22 132-32	14 14 16 16 16	35.0 60.0 60.0 80.0 100		
160-22	16 16 18 18	60.0 80.0 80.0 150		
160-32	18 18 18	80.0 150 200		
180-12	18 18 20 20	80.0 150 145 260		
180-32	18 18 20 20 20	80.0 150 145 260 315		
180-42	18 18 20 20 20 20	80.0 150 145 260 315 400		



Spring-applied brake

Direct connection without rectifier

If the brake is activated directly without a rectifier, a freewheeling diode or a spark suppressor is required to protect against induction peaks.

- Supply voltages
  DC 24 V
  DC 180 V
  DC 205 V

Connection via mains voltage with brake rectifier

If the brake is not directly supplied with DC voltage, a rectifier is required. This is included in the scope of supply and is located in the terminal box of the motor. The rectifier converts the AC voltage of the connection into DC voltage. The following rectifiers are available:

Half-wave rectifier, 6-pole

- Ratio of supply voltage to brake coil voltage = 2.22
- Approved by UL/CSA
- Supply voltages
  AC 230 V
  AC 400 V
  AC 460 V



Bridge rectifier, 6-pole

- Ratio of supply voltage to brake coil voltage = 1.11
- Supply voltage
  AC 230 V



Bridge/half-wave rectifier, 6-pole

- Supply voltage / brake coil voltage ratio
  up to the overexcitation time = 1.11
  From the overexcitation time = 2.22
- Supply voltages
  AC 230 V
  AC 400 V





Spring-applied brake

Connection via mains voltage with brake rectifier

Bridge/half-wave rectifier, 6-pole
- Supply voltage / brake coil voltage ratio
  up to the overexcitation time = 1.11
  From the overexcitation time = 2.22
- Supply voltages
  AC 230 V
  AC 400 V



During the switching operation the bridge/half-wave rectifier functions as a bridge rectifier for the overexcitation time $t_{ü}$ and then as a half-wave rectifier. This combination optimises the performance of the brake – depending on the assignment of brake coil voltage and supply voltage:

- **Short-time overexcitation of the brake coil**
  Activating the brake coil for the overexcitation time $t_{ü}$ with twice the rated voltage allows the disengagement time to be reduced. The brake opens more quickly and wear on the friction lining is reduced.
  These features make this activation version particularly suitable for lifting applications. It is therefore only available in combination with a brake with increased braking torque.
- **Holding current reduction (cold brake)**
  By reducing the holding current, the bridge/half-wave rectifier is able to reduce the power input to the open brake. As the brake heats up less, this type of activation is known as "cold brake".



Spring-applied brake

Permissible friction energy

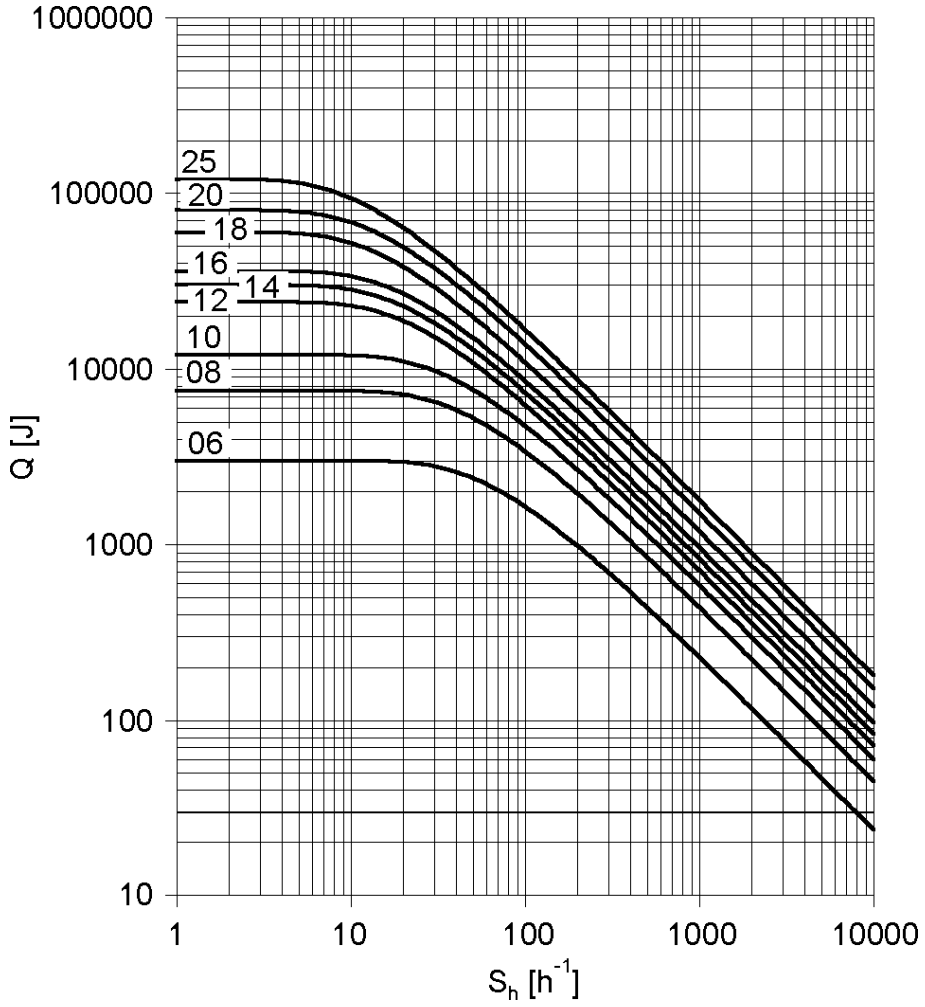

Q =Switching energy per switching cycle
S_h =Operating frequency
Brake size = 06 to 25



Spring-applied brake

Rated data with reduced braking torque

► Please enquire for braking torques and maximum switching work values not listed here.

Size			06	08	10	12	14	16	18	20	25
Power input											
	P_{in}	[kW]	0.020	0.025	0.030	0.040	0.050	0.055	0.085	0.10	0.11
Braking torque											
100	M_B	[Nm]	2.50	3.50	7.00	14.0	35.0	60.0	80.0	145	265
1000	M_B	[Nm]	2.30	3.10	6.10	12.0	30.0	50.0	65.0	115	203
1200	M_B	[Nm]	2.30	3.10	6.00	12.0	29.0	48.0	63.0	112	199
1500	M_B	[Nm]	2.20	3.00	5.80	11.0	28.0	47.0	61.0	109 [1)]	193 [1)]
1800	M_B	[Nm]	2.10	2.90	5.70	11.0	28.0	46.0	60.0 [1)]		
3000	M_B	[Nm]	2.00	2.80	5.30	10.0	26.0 [1)]	43.0 [1)]			
3600	M_B	[Nm]	2.00	2.70	5.20	10.0 [1)]					
Maximum switching energy											
100	Q_E	[KJ]	3.00	7.50	12.0	24.0	30.0	36.0	60.0	80.0	120
1000	Q_E	[KJ]	3.00	7.50	12.0	24.0	30.0	36.0	60.0	80.0	120
1200	Q_E	[KJ]	3.00	7.50	12.0	24.0	30.0	36.0	60.0	80.0	120
1500	Q_E	[KJ]	3.00	7.50	12.0	24.0	30.0	36.0	60.0	24.0 [1)]	36.0 [1)]
1800	Q_E	[KJ]	3.00	7.50	12.0	24.0	30.0	36.0	36.0 [1)]		
3000	Q_E	[KJ]	3.00	7.50	12.0	24.0	18.0 [1)]	11.0 [1)]			
3600	Q_E	[KJ]	3.00	7.50	12.0	7.00 [1)]					
Transition operating frequency											
	$S_{hü}$	[1/h]	79.0	50.0	40.0	30.0	28.0	27.0	20.0	19.0	15.0
Moment of inertia											
	J	[kgcm²]	0.015	0.061	0.20	0.45	0.63	1.50	2.90	7.30	20.0
Mass											
	m	[kg]	0.90	1.50	2.60	4.20	5.80	8.70	12.6	19.5	31.0

[1)] In the region of the load limit the value for friction energy Q_{BW} can be reduced to 40 %.

5.9



Spring-applied brake

Rated data with reduced braking torque

► Activation via half-wave or bridge rectifier

Size										
			06	08	10	12	14	16	18	20	25
Friction energy											
	Q_{BW}	[MJ]	113	210	264	706	761	966	1542	2322	3522
Delay time											
Engaging	t_{11}	[ms]	11.0	14.0	20.0	21.0	37.0	53.0	32.0	47.0	264
Rise time											
Braking torque	t_{12}	[ms]	13.0	10.0	17.0	19.0	22.0	30.0	20.0	100	120
Engagement time											
	t_1	[ms]	24.0		37.0	40.0	59.0	83.0	52.0	147	384
Disengagement time											
	t_2	[ms]	35.0	37.0	57.0	65.0	148	169	230	207	269

► Activation via bridge/half-wave rectifier

Design										
			Holding current reduction (cold brake)								
Size										
			06	08	10	12	14	16	18	20	25
Friction energy											
	Q_{BW}	[MJ]	113	210	264	706	761	966	1542	2322	3522
Overexcitation time											
	$t_{ü}$	[ms]	300				1300				
Min. rest time											
	t	[ms]	900				3900				
Delay time											
Engaging	t_{11}	[ms]	12.0	22.0	35.0	49.0	61.0	114	83.0	126	304
Rise time											
Braking torque	t_{12}	[ms]	14.0	16.0	30.0	45.0	37.0	65.0	52.0	269	138
Engagement time											
	t_1	[ms]	26.0	38.0	66.0	93.0	97.0	180	134	395	443
Disengagement time											
	t_2	[ms]	35.0	37.0	57.0	65.0	148	169	230	207	269

► The brake response and application times are guide values. The engagement time is 10 times longer with AC-side switching. With the maximum air gap the disengagement time t_2 – depending on the brake and control – is up to 4 times longer than the disengagement time with the rated air gap.



Spring-applied brake

Rated data with standard braking torque

► Please enquire for braking torques and maximum switching work values not listed here.

Size			06	08	10	12	14	16	18	20	25
Power input											
	P_{in}	[kW]	0.020	0.025	0.030	0.040	0.050	0.055	0.085	0.10	0.11
Braking torque											
100	M_B	[Nm]	4.00	8.00	16.0	32.0	60.0	80.0	150	260	400
1000	M_B	[Nm]	3.70	7.20	14.0	27.0	51.0	66.0	121	206	307
1200	M_B	[Nm]	3.60	7.00	14.0	27.0	50.0	65.0	118	201	300
1500	M_B	[Nm]	3.50	6.80	13.0	26.0	48.0	63.0	115	195 [1)]	291 [1)]
1800	M_B	[Nm]	3.40	6.70	13.0	26.0	47.0	61.0	112 [1)]		
3000	M_B	[Nm]	3.20	6.30	12.0	24.0	44.0 [1)]	57.0 [1)]			
3600	M_B	[Nm]	3.20	6.10	12.0	23.0 [1)]					
Maximum switching energy											
100	Q_E	[KJ]	3.00	7.50	12.0	24.0	30.0	36.0	60.0	80.0	120
1000	Q_E	[KJ]	3.00	7.50	12.0	24.0	30.0	36.0	60.0	80.0	120
1200	Q_E	[KJ]	3.00	7.50	12.0	24.0	30.0	36.0	60.0	80.0	120
1500	Q_E	[KJ]	3.00	7.50	12.0	24.0	30.0	36.0	60.0	24.0 [1)]	36.0 [1)]
1800	Q_E	[KJ]	3.00	7.50	12.0	24.0	30.0	36.0	36.0 [1)]		
3000	Q_E	[KJ]	3.00	7.50	12.0	24.0	18.0 [1)]	11.0 [1)]			
3600	Q_E	[KJ]	3.00	7.50	12.0	7.00 [1)]					
Transition operating frequency											
	$S_{hü}$	[1/h]	79.0	50.0	40.0	30.0	28.0	27.0	20.0	19.0	15.0
Moment of inertia											
	J	[kgcm²]	0.015	0.061	0.20	0.45	0.63	1.50	2.90	7.30	20.0
Mass											
	m	[kg]	0.90	1.50	2.60	4.20	5.80	8.70	12.6	19.5	31.0

[1)] In the region of the load limit the value for friction energy Q_{BW} can be reduced to 40 %.



Spring-applied brake

Rated data with standard braking torque

► Activation via half-wave or bridge rectifier

Size			06	08	10	12	14	16	18	20	25
Friction energy											
	Q_{BW}	[MJ]	85.0	158	264	530	571	966	1542	2322	3522
Delay time											
Engaging	t_{11}	[ms]	15.0		28.0		17.0	27.0	33.0	65.0	110
Rise time											
Braking torque	t_{12}	[ms]	13.0	16.0	19.0	25.0		30.0	45.0	100	120
Engagement time											
	t_1	[ms]	28.0	31.0	47.0	53.0	42.0	57.0	78.0	165	230
Disengagement time											
	t_2	[ms]	45.0	57.0	76.0	115	210	220	270	340	390

► Activation via bridge/half-wave rectifier

Design			Holding current reduction (cold brake)								
Size			06	08	10	12	14	16	18	20	25
Friction energy											
	Q_{BW}	[MJ]	85.0	158	264	530	571	966	1542	2322	3522
Overexcitation time											
	$t_{ü}$	[ms]	300				1300				
Min. rest time											
	t	[ms]	900				3900				
Delay time											
Engaging	t_{11}	[ms]	16.0	25.0	31.0	48.0	33.0	58.0	80.0	102	154
Rise time											
Braking torque	t_{12}	[ms]	14.0	27.0	21.0	43.0	49.0	64.0	109	157	168
Engagement time											
	t_1	[ms]	30.0	52.0		90.0	82.0	122	189	259	322
Disengagement time											
	t_2	[ms]	45.0	57.0	76.0	115	210	220	270	340	390

► The brake response and application times are guide values. The engagement time is 10 times longer with AC-side switching. With the maximum air gap the disengagement time t_2 – depending on the brake and control – is up to 4 times longer than the disengagement time with the rated air gap.



Spring-applied brake

Rated data with increased braking torque

► Please enquire for braking torques and maximum switching work values not listed here.

Size			10	12	14	16	16	18	20	20	25	25
Power input												
	P_{in}	[kW]	0.030	0.040	0.050	0.055	0.055	0.085	0.10	0.10	0.11	0.11
Braking torque												
100	M_B	[Nm]	23.0	46.0	75.0	100	125	200	315	400	490	600
1000	M_B	[Nm]	20.0	39.0	64.0	83.0	103	162	249	317	376	461
1200	M_B	[Nm]	20.0	39.0	62.0	81.0	101	158	244	309	367	449
1500	M_B	[Nm]	19.0	38.0	60.0	78.0	98.0	153	237 [1)]	300 [1)]	356 [1)]	436 [1)]
1800	M_B	[Nm]	19.0	37.0	59.0	77.0	96.0	150 [1)]				
3000	M_B	[Nm]	17.0	34.0	55.0 [1)]	71.0 [1)]	89.0 [1)]					
3600	M_B	[Nm]	17.0	33.0 [1)]								
Maximum switching energy												
100	Q_E	[KJ]	12.0	24.0	30.0	36.0	36.0	60.0	80.0	80.0	120	120
1000	Q_E	[KJ]	12.0	24.0	30.0	36.0	36.0	60.0	80.0	80.0	120	120
1200	Q_E	[KJ]	12.0	24.0	30.0	36.0	36.0	60.0	80.0	80.0	120	120
1500	Q_E	[KJ]	12.0	24.0	30.0	36.0	36.0	60.0	24.0 [1)]	24.0 [1)]	36.0 [1)]	36.0 [1)]
1800	Q_E	[KJ]	12.0	24.0	30.0	36.0	36.0	36.0 [1)]				
3000	Q_E	[KJ]	12.0	24.0	18.0 [1)]	11.0 [1)]	11.0 [1)]					
3600	Q_E	[KJ]	12.0	7.00 [1)]								
Transition operating frequency												
	$S_{hü}$	[1/h]	40.0	30.0	28.0	27.0	27.0	20.0	19.0	19.0	15.0	15.0
Moment of inertia												
	J	[kgcm²]	0.20	0.45	0.63	1.50	1.50	2.90	7.30	7.30	20.0	20.0
Mass												
	m	[kg]	2.60	4.20	5.80	8.70	8.70	12.6	19.5	19.5	31.0	31.0

[1)] In the region of the load limit the value for friction energy Q_{BW} can be reduced to 40 %.

5.9

► Activation via half-wave or bridge rectifier

Size			10	12	14	16		18	20		25	
Friction energy												
	Q_{BW}	[MJ]	198	353	253	563	241	578	1596	580	2465	1409
Delay time												
Engaging	t_{11}	[ms]	10.0	16.0	11.0	22.0	17.0	24.0	46.0	17.0	77.0	38.0
Rise time												
Braking torque	t_{12}	[ms]	19.0	25.0		30.0		45.0	100		120	
Engagement time												
	t_1	[ms]	29.0	41.0	36.0	52.0	47.0	69.0	146	117	197	158
Disengagement time												
	t_2	[ms]	109	193	308	297	435	356	378	470	451	532



Spring-applied brake

Rated data with increased braking torque

► Activation via bridge/half-wave rectifier

Design			Holding current reduction (cold brake)									
Size			10	12	14	16		18	20		25	
Friction energy												
	Q_{BW}	[MJ]	198	353	253	563	241	578	1596	580	2465	1409
Overexcitation time												
	$t_{ü}$	[ms]	300			1300						
Min. rest time												
	t	[ms]	900			3900						
Delay time												
Engaging	t_{11}	[ms]	24.0	27.0	17.0	41.0	21.0	60.0	69.0	17.0	123	85.0
Rise time												
Braking torque	t_{12}	[ms]	44.0	43.0	37.0	55.0	37.0	113	148	100	190	270
Engagement time												
	t_1	[ms]	68.0	70.0	54.0	97.0	57.0	173	217	334	313	355
Disengagement time												
	t_2	[ms]	109	193	308	297	435	356	378	470	451	532

Design			Over-excitation									
Size			10	12	14	16		18	20		25	
Friction energy												
	Q_{BW}	[MJ]	264	706	761	966		1542	2322		3522	
Overexcitation time												
	$t_{ü}$	[ms]	300			1300						
Min. rest time												
	t	[ms]	900			3900						
Delay time												
Engaging	t_{11}	[ms]	29.0	54.0	31.0	70.0	46.0	86.0	103	55.0	171	135
Rise time												
Braking torque	t_{12}	[ms]	53.0	87.0	68.0	93.0	83.0	160	222	319	266	430
Engagement time												
	t_1	[ms]	82.0	141	99.0	163	129	246	325	374	437	565
Disengagement time												
	t_2	[ms]	53.0	81.0	117	141	168	151	160	167	184	204

► The brake response and application times are guide values. The engagement time is 10 times longer with AC-side switching. With the maximum air gap the disengagement time t_2 – depending on the brake and control – is up to 4 times longer than the disengagement time with the rated air gap.



Spring-applied brake

Manual release lever

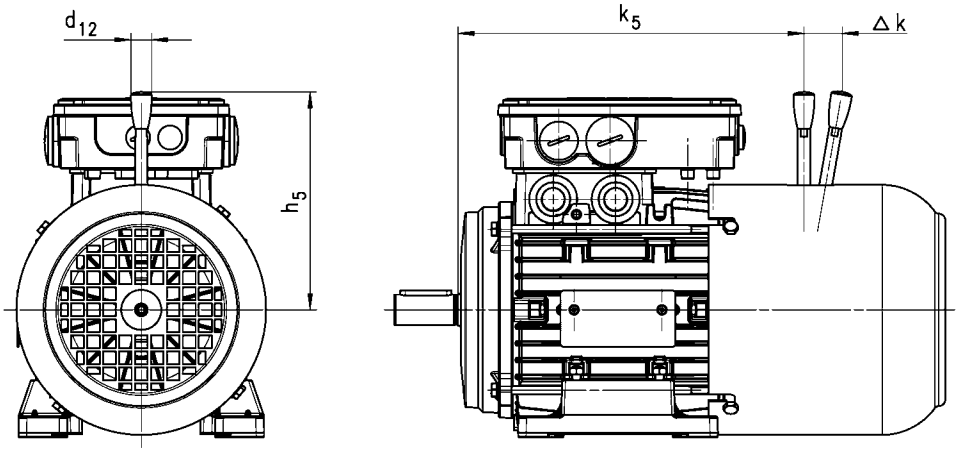

	Brake				
		k_5	Δ k	h_5	d_{12}
		[mm]	[mm]	[mm]	[mm]
063	06	178	29	107	13.0
071	06 08	205 206	29 27	107 116	13.0 13.0
080	08 10	224 239	27 28	116 132	13.0 13.0
090	08 10	238 251	27 28	116 132	13.0 13.0
100	10 12	305 307	28 37	132 161	13.0 13.0
112	12 14	320 323	37 41	161 195	13.0 24.0
132	14 16	400 406	41 55	195 240	24.0 24.0
160	16 18	505 509	55 59	240 279	24.0 24.0
180	18 20	540 546	59 74	279 319	24.0 24.0

The following combinations with manual release lever and motor connection in the same position are not possible:
- HAN connector with connection in position 1
- Inverter motec
- Terminal box of motor sizes 071, 080, 090 for brake and retracting (M□□MA BR/BS/BA/BI)



Resolver

Stator-fed resolver with two stator windings offset by 90° and one rotor winding with transformer winding.

► The three-phase AC motors with resolver cannot be used for speed-dependent safety functions in connection with the SM 301 safety module.

Product key				
				RS1
Accuracy				
			[']	-10 ... 10
Absolute positioning				
				1 revolution
Max. input voltage				
DC	$U_{in,max}$		[V]	10.0
Max. input frequency				
	$f_{in,max}$		[kHz]	4.00
Ratio				
Stator / rotor		± 5 %		0.30
Rotor impedance				
	Z_{ro}		[Ω]	51 + j90
Stator impedance				
	Z_{so}		[Ω]	102 + j150
Impedance				
	Z_{rs}		[Ω]	44 + j76
Min. insulation resistance				
At DC 500 V	R		[MΩ]	10.0
Number of pole pairs				
				1



Incremental encoder and SinCos absolute value encoder

► The three-phase AC motors with incremental encoders or SinCos absolute value encoders cannot be used for speed-dependent safety functions in connection with the SM 301 safety module.

Encoder type			HTL incremental				TTL incremental			SinCos absolute value
Product key			IG128-24V-H	IG512-24V-H	IG1024-24V-H	IG2048-24V-H	IG512-5V-T	IG1024-5V-T	IG2048-5V-T	AM1024-8V-H
Encoder type										Multi-turn
Pulses			128	512	1024	2048	512	1024	2048	1024
Output signals			HTL				TTL			1 Vss
Interfaces			A, B track	A, B, N track and inverted						Hiperface
Absolute revolutions			0							4096
Accuracy		[']	-22.5 ... 22.5	-2 ... 2						-0.8 ... 0.8
Min. input voltage										
DC	$U_{in,min}$	[V]	8.00				4.75			7.00
Max. input voltage										
DC	$U_{in,max}$	[V]	26.0	30.0			5.25			12.0
Max. current consumption										
	I_{max}	[A]	0.040	0.15						0.080
Limit frequency										
	f_{max}	[kHz]	30.0	160			300			200
Inverter assignment			E84AVSC E84AVHC	E84AVHC			E84AVTC E94A ECS EVS93			

Inverters
- Inverter Drives 8400 StateLine (E84AVSC)
- Inverter Drives 8400 HighLine (E84AVHC)
- Inverter Drives 8400 TopLine (E84AVTC)

Servo-Inverters
- Servo Drives 9400 (E94A)
- 9300 servo inverters (EVS93)
- Servo Drives ECS



Blower

► The blower terminal box is available in positions 2, 3 or 5.

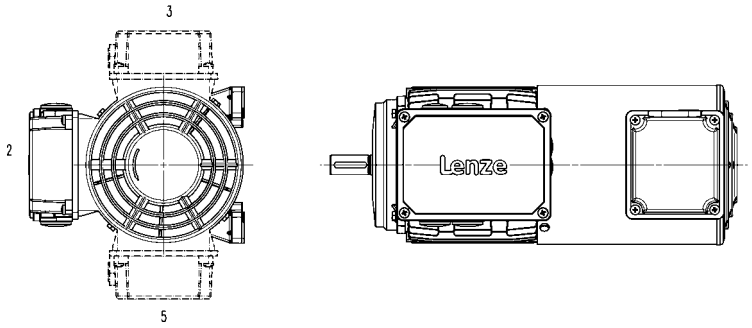

Rated data for 50 Hz

Size	Number of phases	Connection method					
Motor							
			U_{min}	U_{max}	P_{max}	I_{max}	m
			[V]	[V]	[kW]	[A]	[kg]
063	1		230	277	0.027	0.11	2.00
	3	Δ	200	303	0.028	0.12	
		Y	346	525		0.070	
071	1		230	277	0.027	0.10	2.10
	3	Δ	200	303	0.031	0.11	
		Y	346	525		0.060	
080	1		230	277	0.029	0.11	2.30
	3	Δ	200	303	0.031		
		Y	346	525		0.060	
090	1		220	277	0.065	0.29	2.70
	3	Δ	200	303	0.091	0.38	
		Y	346	525		0.22	
100	1		220	277	0.066	0.28	3.00
	3	Δ	200	303	0.091	0.37	
		Y	346	525		0.22	
112	1		220	277	0.071	0.28	3.10
	3	Δ	200	303	0.097	0.35	
		Y	346	525		0.20	
132	1		230	277	0.098	0.40	4.20
	3	Δ	200	303	0.12	0.58	
		Y	346	525		0.33	
160	1		230	277	0.25	0.97	6.20
	3	Δ	200	303		0.87	
		Y	346	525		0.50	
180	1		230	277		0.97	8.00
	3	Δ	200	303		0.87	
		Y	346	525		0.50	



Blower

Rated data for 50 Hz

Size	Number of phases	Connection method					
Motor							
			U_{min}	U_{max}	P_{max}	I_{max}	m
			[V]	[V]	[kW]	[A]	[kg]
200	1		230	277	0.25	0.97	8.00
	3	Δ	200	303		0.87	
		Y	346	525		0.50	
225		Δ	200	400	0.28	1.10	15.0
		Y	346	525	0.17	0.35	

Rated data for 60 Hz

Size	Number of phases	Connection method					
Motor							
			U_{min}	U_{max}	P_{max}	I_{max}	m
			[V]	[V]	[kW]	[A]	[kg]
063	1		230	277	0.032	0.12	2.00
	3	Δ	220	332	0.028	0.10	
		Y	380	575		0.060	
071	1		230	277	0.033	0.12	2.10
	3	Δ	220	332	0.029	0.10	
		Y	380	575		0.060	
080	1		230	277	0.037	0.14	2.30
	3	Δ	220	332	0.034	0.10	
		Y	380	575		0.060	
090	1		220	277	0.065	0.25	2.70
	3	Δ		332	0.077	0.33	
		Y	380	575		0.19	
100	1		220	277	0.075	0.30	3.00
	3	Δ		332	0.087	0.31	
		Y	380	575		0.18	
112	1		220	277	0.094	0.37	3.10
	3	Δ		332	0.10	0.31	
		Y	380	575		0.18	
132	1		230	277	0.15	0.57	4.20
	3	Δ	220	332		0.44	
		Y	380	575		0.25	
160		Δ	220	332	0.36	0.93	6.20
		Y	380	575		0.56	
180		Δ	220	332		0.93	8.00
		Y	380	575		0.56	
200		Δ	220	332		0.93	
		Y	380	575		0.56	
225		Δ	220	400	0.28	0.76	15.0
		Y	380	575	0.26	0.43	



Temperature monitoring

► The thermal sensors are integrated in the windings. The use of an additional motor protection switch is recommended.

TKO thermal contacts

Function	Operating temperature	Min. reset temperature	Max. reset temperature	Max. input current	Max. input voltage
					AC
	T	T_{min}	T_{max}	$I_{in,max}$	$U_{in,max}$
	-5 ... 5				
	[°C]	[°C]	[°C]	[A]	[V]
NC contact	150	90.0	135	2.50	250

PTC thermistor

Function	Operating temperature	Rated resistance			Standard
		155 °C	-20 °C	140 °C	
	T	R_N	R_N	R_N	
	-5 ... 5				
	[°C]	[Ω]	[Ω]	[Ω]	
Sudden change in resistance	150	550	30.0	250	DIN 44080 DIN VDE 0660 Part 303



Temperature monitoring

KTY temperature sensor

	Function	Rated resistance			Max. input current	
		25 °C	150 °C	170 °C	25 °C	170 °C
		R_N	R_N	R_N	$I_{in,max}$	$I_{in,max}$
		[Ω]	[Ω]	[Ω]	[A]	[A]
KTY83-110	Continuous resistance change	1000	2225	2471	0.010	0.002
KTY84-130	Continuous resistance change	603	1334	1482	0.010	0.002

Variation of resistance

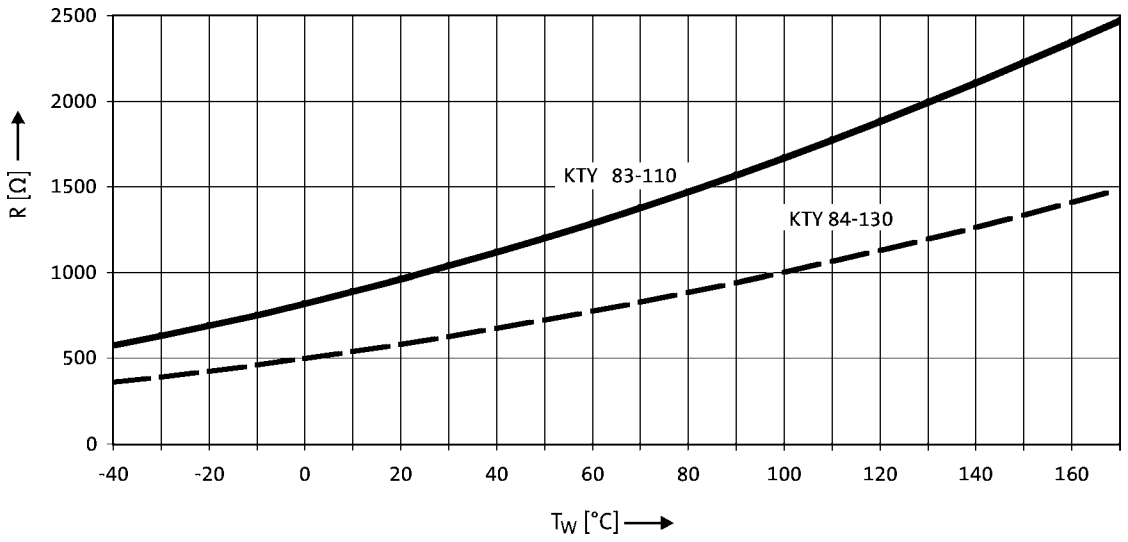

► If the thermal sensor is supplied with a measurement current of 1 mA, the above relationship between the temperature and the resistance applies.

5.9



Terminal box

The three-phase AC motors are designed for operation at a constant mains frequency and with an inverter.
For 50 Hz operation, the motors are operated in Δconfiguration at 230 V or in star configuration at 400 V.
For inverter operation, the base frequency has been specified as 87 Hz at a rated voltage of 400 V in Δconfiguration.

In the standard version, the motors are connected in the terminal box. As an option, the motors are also available with the connectors described on the following pages as long as the permissible ratings are not exceeded.

Connections

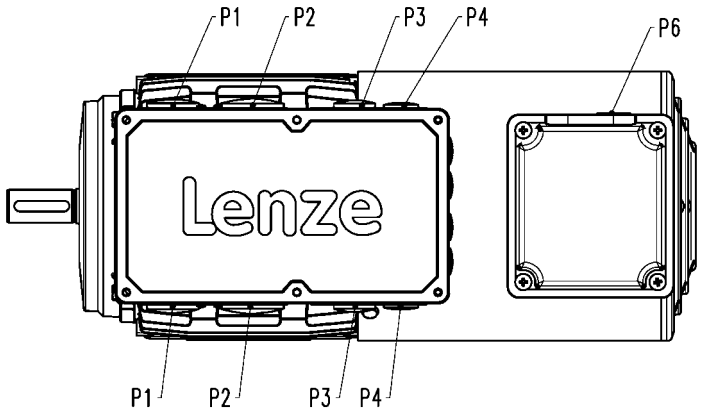

Motor type	M□□MAXX M□□MABR M□□MARS M□□MAIG M□□MAAG	M□□MABS M□□MABI M□□MABA
Built-on accessories		

	P_1	P_2	P_3	P_4	P_6	P_1	P_2	P_3	P_4	P_6
	[mm]	[mm]	[mm]	[mm]	[mm]	[mm]	[mm]	[mm]	[mm]	[mm]
063	M16x1.5	M20x1.5								
071										
080	M20x1.5	M25x1.5				M25x1.5	M32x1.5			
090										
100								M20x1.5	M16x1.5	
112					M16x1.5					M16x1.5
132	M25x1.5	M32x1.5								
160	M50x1.5	M16x1.5	M20x1.5	M16x1.5		M50x1.5	M16x1.5			
180										
200										
225 [1]	M12x1.5	M63x1.5	M50x1.5	M12x1.5		M12x1.5	M63x1.5	M50x1.5	M12x1.5	

[1] The cable glands P1 to P4 are only arranged at the bottom.



Plug connectors

ICN, HAN and M12 connectors (only for IG128-24V-H incremental encoder) are available for the three-phase AC motors.

ICN connector

A connector is used for the power connection, connection of the brake, and the temperature monitoring connection.
The feedback and blower connections are implemented via a separate connector in each case.

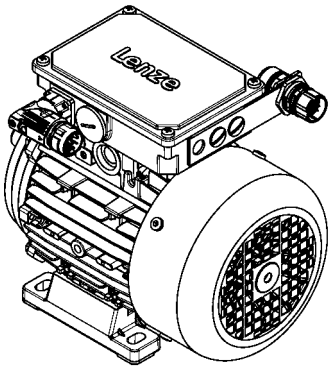

Connection for power, brake and temperature monitoring

The connectors can be rotated by 270° and are equipped with a bayonet catch for SpeedTec connectors. As the connector fixing is also compatible with conventional box nuts, existing mating connectors can still be used without difficulty. The motor connection is determined in the terminal box.

► ICN 6-pole

No connection of temperature monitoring possible!

Pin assignment			
Contact	Designation	Meaning	
1	BD1 / BA1	Brake +/AC	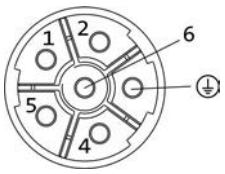
2	BD2 / BA2	Brake -/AC	
PE	PE	PE conductor	
4	U	Phase U power	
5	V	Phase V power	
6	W	Phase W power	

► ICN 8-pole

Pin assignment			
Contact	Designation	Meaning	
1	U	Phase U power	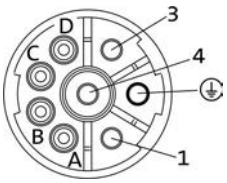
PE	PE	PE conductor	
3	W	Phase W power	
4	V	Phase V power	
A	TB1 / TP1 / R1	Thermal sensor: TKO/PTC/ +KTY	
B	TB2 / TP2 / R2	Thermal sensor: TKO/PTC/-KTY	
C	BD1 / BA1	Brake +/AC	
D	BD2 / BA2	Brake -/AC	



ICN connector

Feedback connection

All encoder systems (apart from IG128-24V-H) are also available with an ICN connector fixed to the motor terminal box for exceptionally fast commissioning. The connectors are fitted with a bayonet fixing, which is also compatible with conventional union nuts. Existing mating connectors can therefore continue to be used without difficulty.

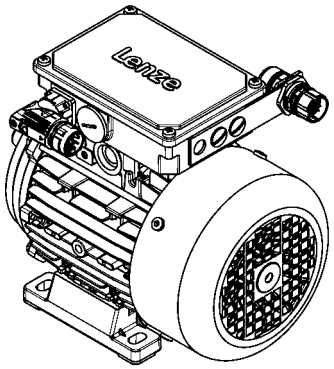

► Resolver

Pin assignment			
Contact	Designation	Meaning	
1	+Ref	Transformer windings	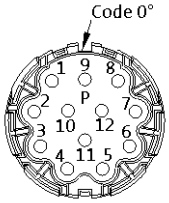
2	-Ref		
3	+VCC ETS	Supply: Electronic nameplate	
4	+COS	Cosine stator windings	
5	-COS		
6	+SIN	Sine stator windings	
7	-SIN		
8		Not assigned	
9			
10			
11	+KTY	KTY temperature sensor	
12	-KTY		

► Hiperface incremental encoder and SinCos absolute value encoder

Pin assignment			
Contact	Designation	Meaning	
1	B	Track B/+SIN	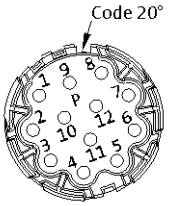
2	A^-	Track A inverse/-COS	
3	A	Track A/+COS	
4	$+U_B$	Supply +	
5	GND	Mass	
6	Z^-	Zero track inverse/-RS485	
7	Z	Zero track/+RS485	
8		Not assigned	
9	B^-	Track B inverse/-SIN	
10		Not assigned	
11	+KTY	KTY temperature sensor	
12	-KTY		



ICN connector

Dimensions of the connectors on the terminal box

The following connector positions are possible:
- power connection (A) in position 5 and feedback connection (B) in position 3
- power connection (A) in position 3 and feedback connection (B) in position 5

With the following motors, the feedback connection (B) is only available in position 3 or 5:
- motor frame size 132 to 180

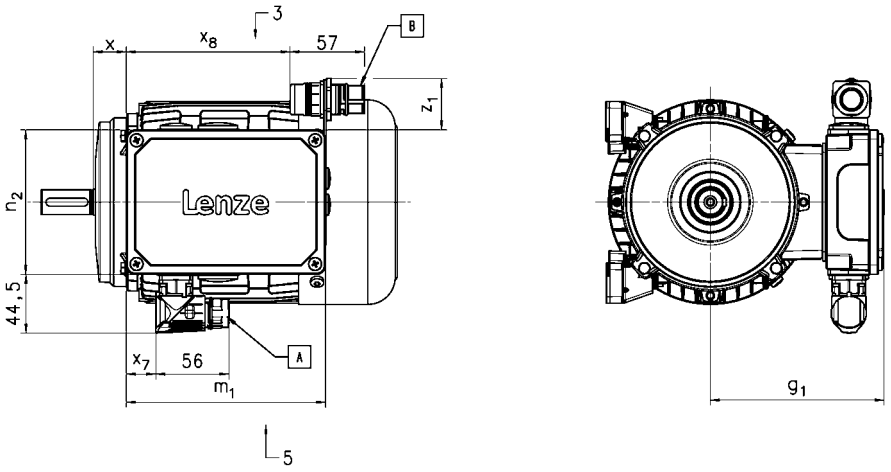

Motor type	M□□MAXX M□□MARS M□□MAIG M□□MAAG	M□□MABR M□□MABS M□□MABI M□□MABA

	g_1	x	m_1	n_2	x_7	x_8	$z_{1, max}$
	[mm]	[mm]	[mm]	[mm]	[mm]	[mm]	[mm]
063	109	17	136	103	16	109	43
071	118	24					
080	132	25	152	121	23	125	41
090	137	29					
100	147	36					
112	158	38					
132	187	51	194	125	27	166	71
160	220	69	253	152		200	65
180	239	75					
200		77					
225	348	68	354	204		328	51



ICN connector

Blower connection

The blower is also optionally available with an ICN connector fixed to the terminal box of the blower for exceptionally fast commissioning. The connectors are fitted with a bayonet fixing, which is also compatible with conventional union nuts. Existing counter plugs can therefore continue to be used without difficulty.

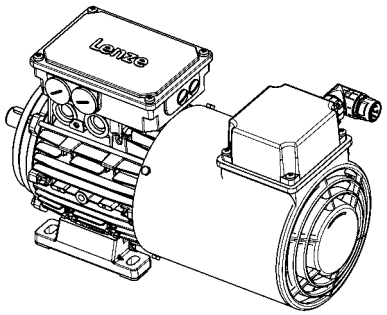

► Blower 1-ph

Pin assignment			
Contact	Designation	Meaning	
PE	PE	PE conductor	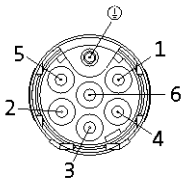
1	U1	Fan	
2	U2		
3		Not assigned	
4			
5			
6			

► Blower 3-ph

Pin assignment			
Contact	Designation	Meaning	
PE	PE	PE conductor	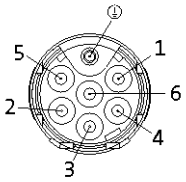
1	U	Phase U power	
2		Not assigned	
3	V	Phase V power	
4		Not assigned	
5			
6	W	Phase W power	



ICN connector

Blower connection

- The blower terminal box is available in positions 2, 3 or 5.
- In addition, the cover of the blower terminal box (including connectors) can be rotated progressively through 90° if necessary.

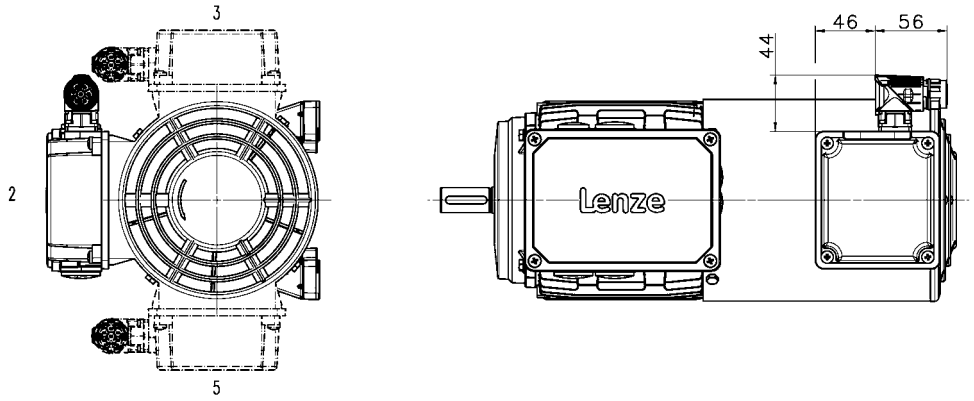



M12 connector

IG128-24V-H incremental encoder connection

As a standard this incremental encoder is equipped with a connection cable of about 0.5 m length and with a common industry standard M12 connector at its end.

Pin assignment			
Contact	Designation	Meaning	
1	$+U_B$	Supply +	
2	B	Track B	
3	GND	Mass	
4	A	Track A	



HAN connector

10E

In the case of the rectangular HAN-10E connectors, all six ends of the three winding phases are taken out to the power contacts. The motor circuit is therefore determined in the mating connector.

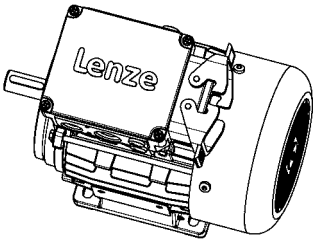

Pin assignment	
Contact	Meaning
1	Terminal board: U1
2	Terminal board: V1
3	Terminal board: W1
4	Brake +/AC
5	Brake -/AC
6	Terminal board: W2
7	Terminal board: U2
8	Terminal board: V2
9	Thermal sensor: +KTY/PTC/TKO
10	Thermal sensor: KTY/PTC/TKO

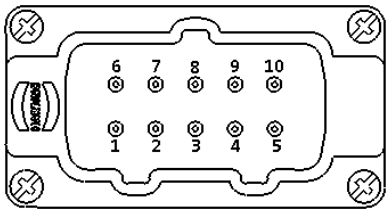



HAN connector

HAN modular

The connector is available with two different power modules (16 A or 40 A), depending on the rated motor current. The motor connection is determined in the terminal box and must be checked before commissioning.

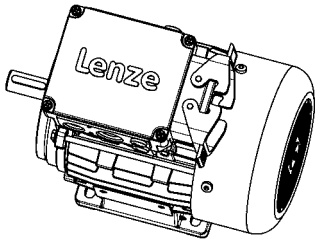

► HAN modular 16 A

Pin assignment			
Module	Contact	Meaning	
A	1	Terminal board: U1	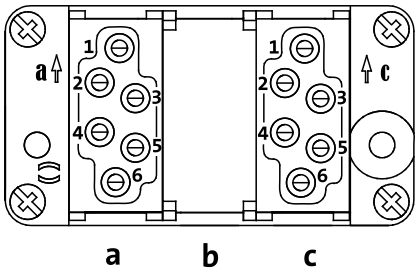
	2	Terminal board: V1	
	3	Terminal board: W1	
B		Dummy module	
C	1	Thermal sensor: +KTY/PTC/TKO	
	2	Brake +/AC	
	3	Brake -/AC	
	4	Rectifier: Switching contact	
	5		
	6	Thermal sensor: KTY/PTC/TKO	

► HAN modular 40 A

Pin assignment			
Module	Contact	Meaning	
A	1	Terminal board: U1	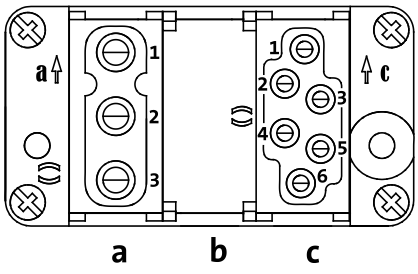
	2	Terminal board: V1	
	3	Terminal board: W1	
B		Dummy module	
C	1	Thermal sensor: +KTY/PTC/TKO	
	2	Brake +/AC	
	3	Brake -/AC	
	4	Rectifier: Switching contact	
	5		
	6	Thermal sensor: KTY/PTC/TKO	



HAN connector

► The connection position for the connector is shown in position 1. Positions 3 and 5 are also possible.

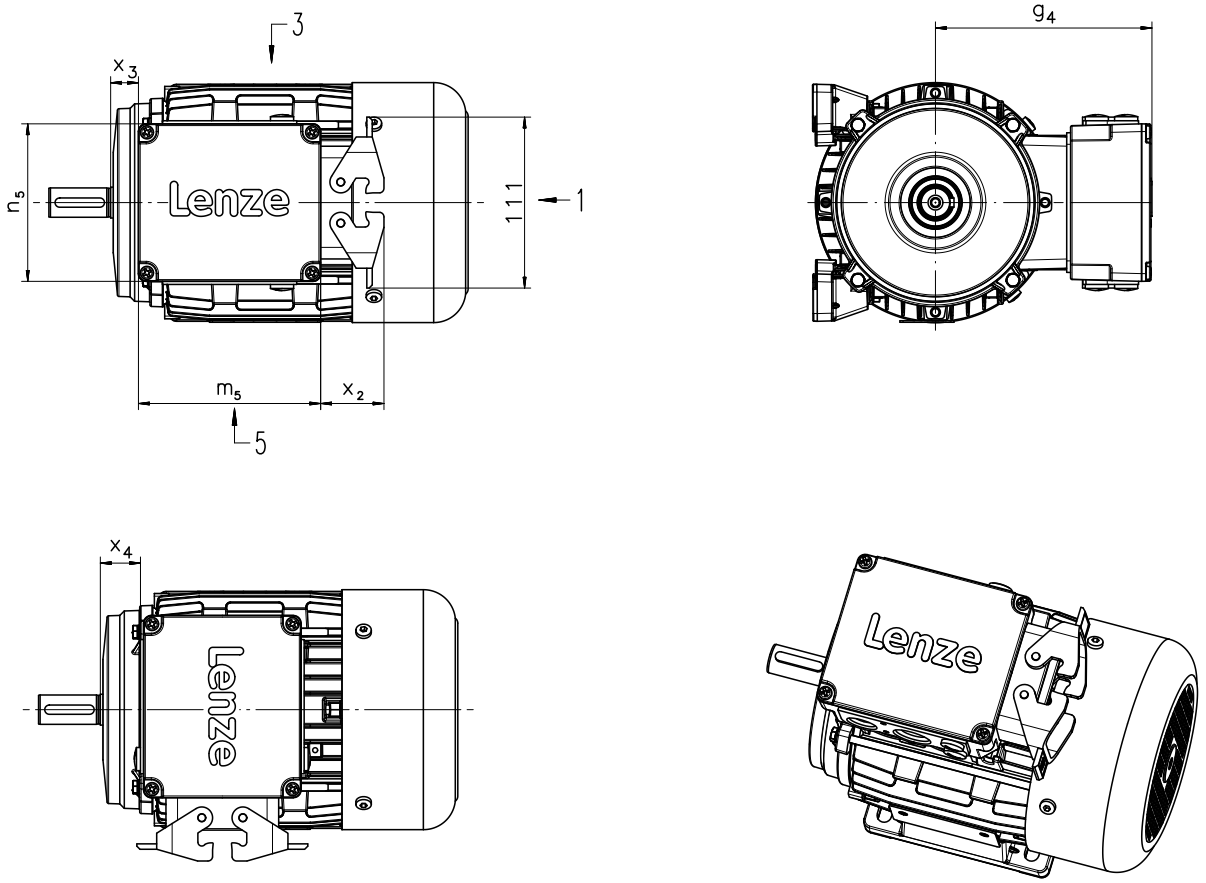

Motor type	M□□MAXX M□□MABR

	g_4	m_5	n_5	x_2	x_3	x_4
	[mm]	[mm]	[mm]	[mm]	[mm]	[mm]
063	120	118	102	41	11	12
071	129				16	17
080	138				18	26
090	143				22	30
100	154				29	37
112	164				28	36
132 [1)]	233	120	180	47	48	18
160	248				72	42

[1)] In the case of the B5 design motors, it is not possible to connect the connector at position 3 or 5.





15593806

Lenze SE
Hans-Lenze-Straße 1
D-31855 Aerzen
Phone: +49 (0)5154 82-0
Telefax: +49 (0)5154 82 28 00

www.Lenze.com