L-force catalogue

Automation systems
Drive solutions

Controls
Inverter
Motors
Gearboxes
Engineering Tools

Motors: MCA asynchronous servo motors

Gearboxes: g500-H helical gearboxes, g500-S shaft-mounted helical gearbox, g500-B bevel gearbox

Lenze
As easy as that.

Contents of the L-force catalogue

About Lenze		Lenze makes many things easy for you.	
		A matter of principle: the right products for every application.	
		L-force product portfolio	
Automation systems		Controller-based Automation	1.1
		Drive-based automation	1.2
Drive solutions		HighLine tasks	2.1
		StateLine tasks	2.2
		BaseLine tasks	2.3
Controls	Cabinet Controllers	Controller 3200 C	3.1
		Controller c300	3.2
	Panel Controllers	Controller p500	3.3
		Controller p300	3.4
		I/O System 1000	3.5
		Monitor Panel	3.6
Inverter	Decentralised	Inverter Drives 8400 protec	4.1
		Inverter Drives 8400 motec	4.2
	Cabinet	Servo Drives 9400 HighLine	4.4
		Inverter Drives 8400 TopLine	4.5
		Servo-Inverter i700	4.6
		Inverter Drives 8400 HighLine	4.7
		Inverter Drives 8400 StateLine	4.8
		Inverter Drives 8400 BaseLine	4.10
Motors	Servo motors	MCS synchronous servo motors	5.1
		MD□KS synchronous servo motors	5.2
		MQA asynchronous servo motors	5.3
		MCA asynchronous servo motors	5.4
	Three-phase AC motors	Inverter opt. three-phase AC motors MF	5.5
		IE2 MH three-phase AC motors	5.6
		IE1 MD three-phase AC motors	5.7
		Lenze Smart Motor m300	5.8
		IE1/2 three-phase AC motors Basic MD/MH	5.9
Gearboxes	Axial gearboxes	g700-P planetary gearbox	6.1
		MPR/MPG planetary gearboxes	6.2
		g500-H helical gearboxes	6.3
		GST helical gearboxes	6.4
		g500-S shaft-mounted helical gearbox	6.5
		GFL shaft-mounted helical gearbox	6.6
	Right-angle gearboxes	g500-B bevel gearbox	6.7
		GKR bevel gearboxes	6.8
		GKS helical-bevel gearbox	6.9
		GSS helical-worm gearboxes	6.10
	Motor data	Assignment see above	6.11
Engineering Tools		Navigator	7.1
		Drive Solution Designer	7.2
		Drive Solution Catalogue	7.3
		Engineer	7.4
		PLC Designer	7.5
		VisiWinNET®	7.6
		EASY Starter	7.7

Selected portfolio

Additional portfolio

Lenze makes many things easy for you.

With our motivated and committed approach, we work together with you to create the best possible solution and set your ideas in motion - whether you are looking to optimise an existing machine or develop a new one. We always strive to make things easy and seek perfection therein. This is anchored in our thinking, in our services and in every detail of our products. It's as easy as that!

1

Developing ideas

Are you looking to build the best machine possible and already have some initial ideas? Then get these down on paper together with us, starting with small innovative details and stretching all the way to completely new machines. Working together, we will develop an intelligent and sustainable concept that is perfectly aligned with your specific requirements.

2

Drafting concepts

We see welcome challenges in your machine tasks, supporting you with our comprehensive expertise and providing valuable impetus for your innovations. We take a holistic view of the individual motion and control functions here and draw up consistent, end-to-end drive and automation solutions for you - keeping everything as easy as possible and as extensive as necessary.

3

Implementing solutions

Our easy formula for satisfied customers is to establish an active partnership with fast decision making processes and an individually tailored offer. We have been using this principle to meet the ever more specialised customer requirements in the field of machine engineering for many years.

4

Manufacturing machines

Functional diversity in perfect harmony: as one of the few full-range providers in the market, we can provide you with precisely those products that you actually need for any machine task – no more and no less. Our L-force product portfolio, a consistent platform for implementing drive and automation tasks, is invaluable in this regard.

5

Ensuring productivity

Productivity, reliability and new performance peaks on a daily basis – these are our key success factors for your machine. After delivery, we offer you cleverly devised service concepts to ensure continued safe operation. The primary focus here is on technical support, based on the excellent application expertise of our highly-skilled and knowledgeable after-sales team.

A matter of principle: the right products for every application.

Lenze's extensive L-force product portfolio follows a very simple principle. The functions of our finely scaled products are assigned to the three lines Base-Line, State-Line or High-Line.

But what does this mean for you? It allows you to quickly recognise which products represent the best solution for your own specific requirements.

Powerful products with a major impact:
- Easy handling
- High quality and durability
- Reliable technologies in tune with the latest developments

Lenze products undergo the most stringent testing in our own laboratory. This allows us to ensure that you will receive consistently high quality and a long service life. In addition to this, five logistics centres ensure that the Lenze products you select are available for quick delivery anywhere across the globe. It's as easy as that!

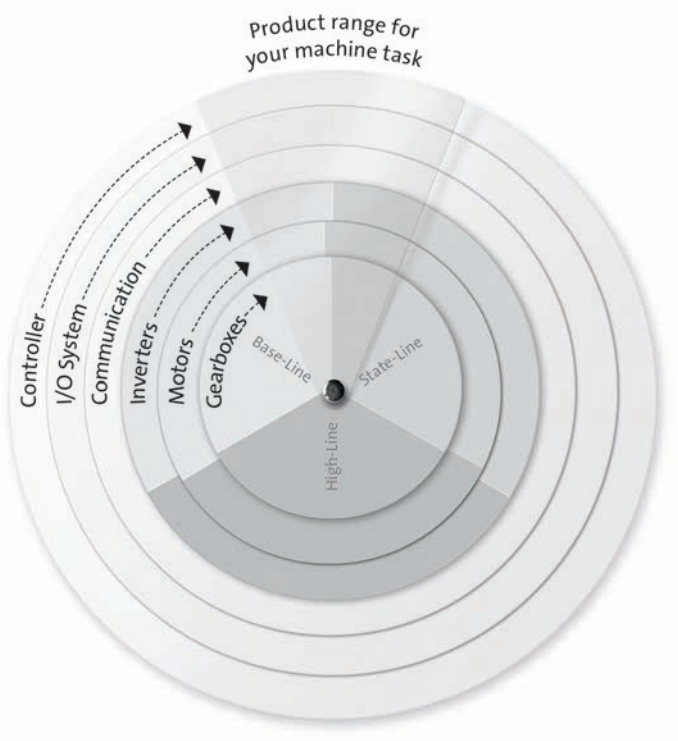

L-force product portfolio

Controls

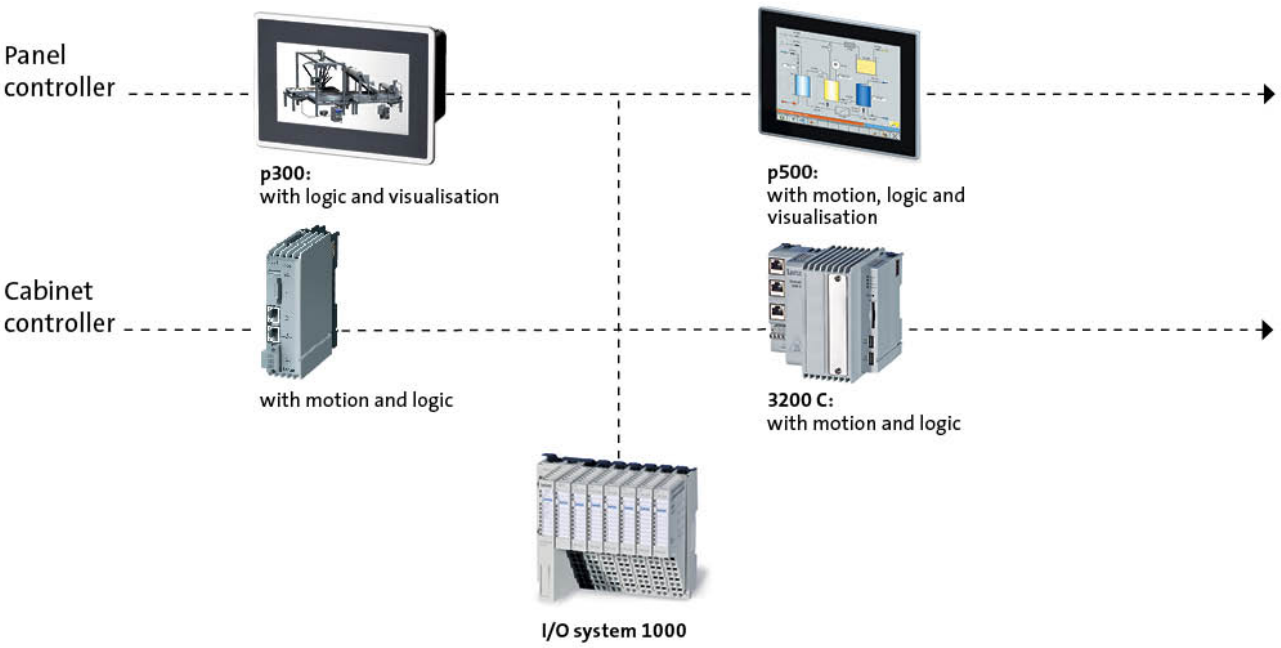

Engineering Tools

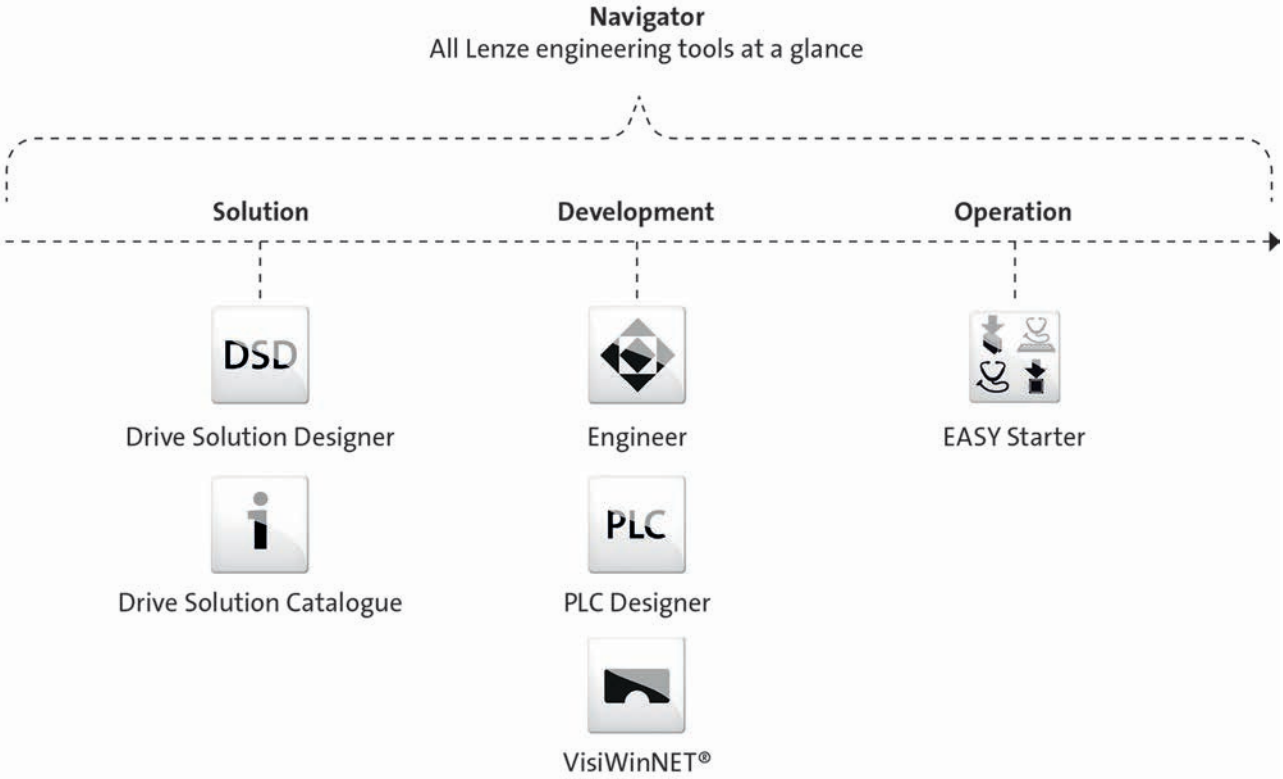

L-force product portfolio

Inverter

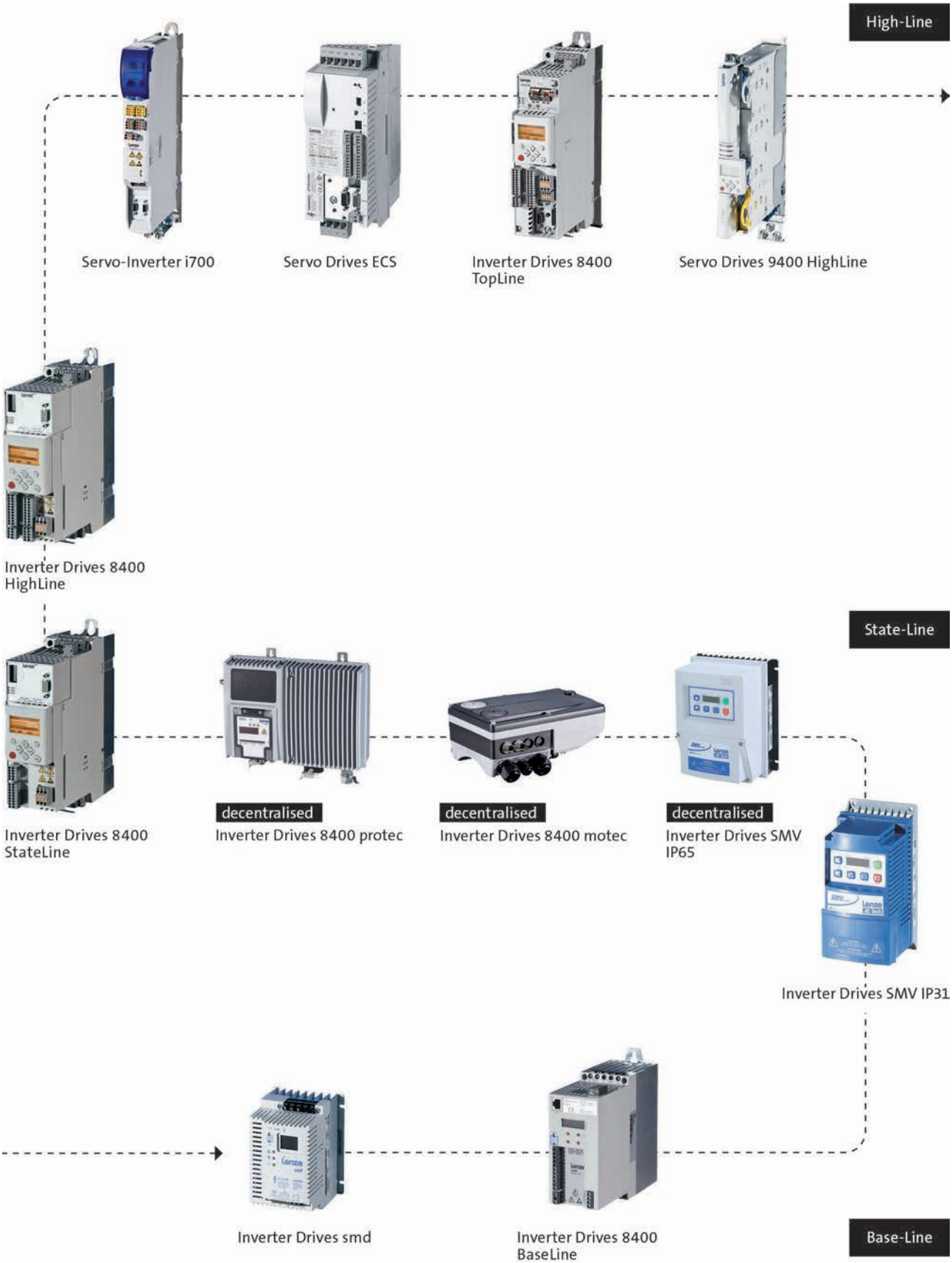

L-force product portfolio

Motors

High-Line

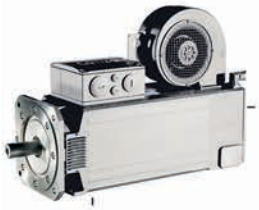

MQA asynchronous servo motors



SDSGS synchronous servo motors



MDXKS synchronous servo motors



Synchronous servo motors MCS



Asynchronous servo motors MCA



Asynchronous servo motors SDSGA

State-Line



MF three-phase AC motors



MH three-phase AC motors



MD three-phase AC motors



Basic MD/MH three-phase AC motors

Base-Line

L-force product portfolio

Gearboxes

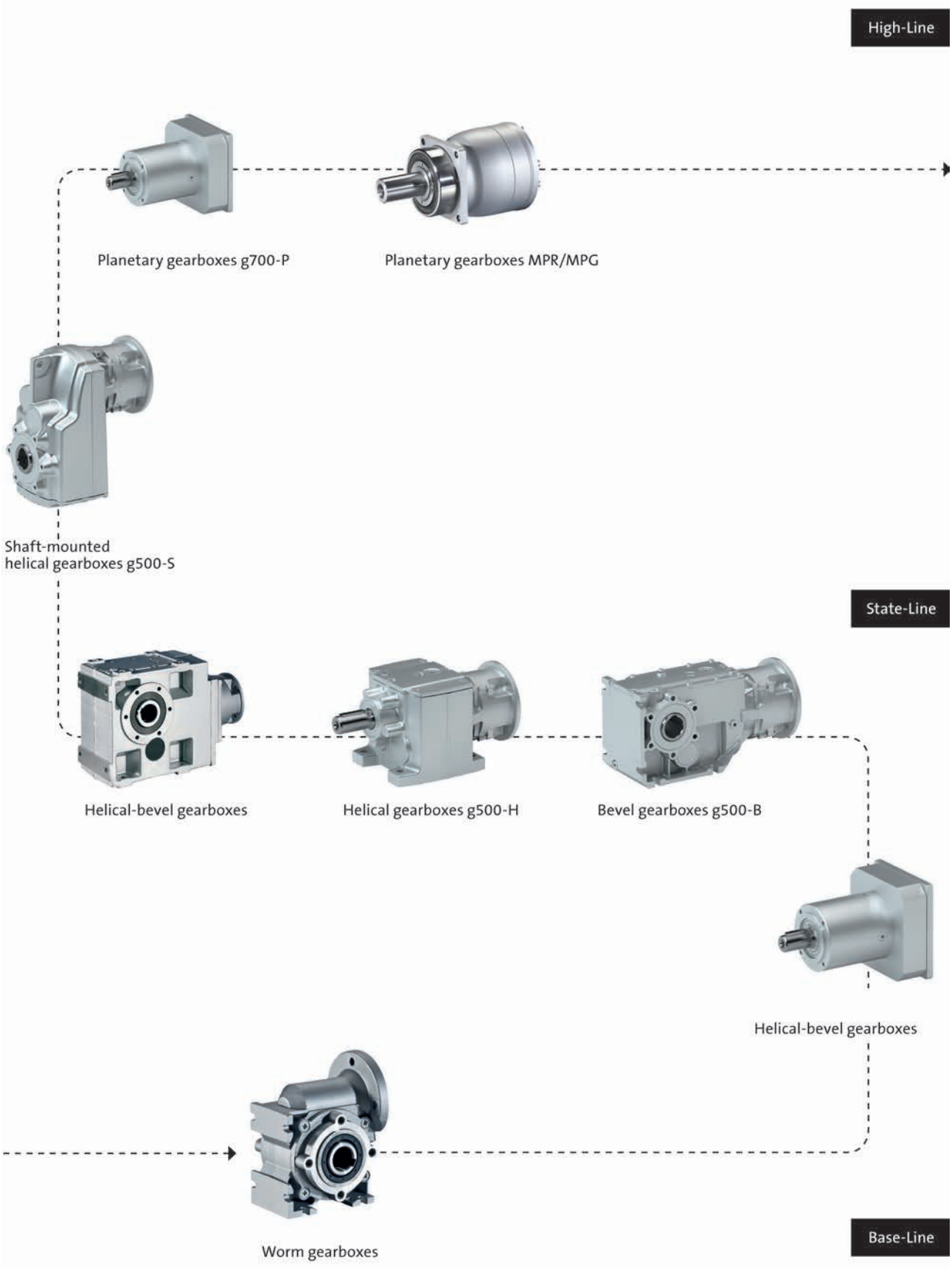

g500-H helical geared motors

11 ... 370 Nm (asynchronous servo motors)

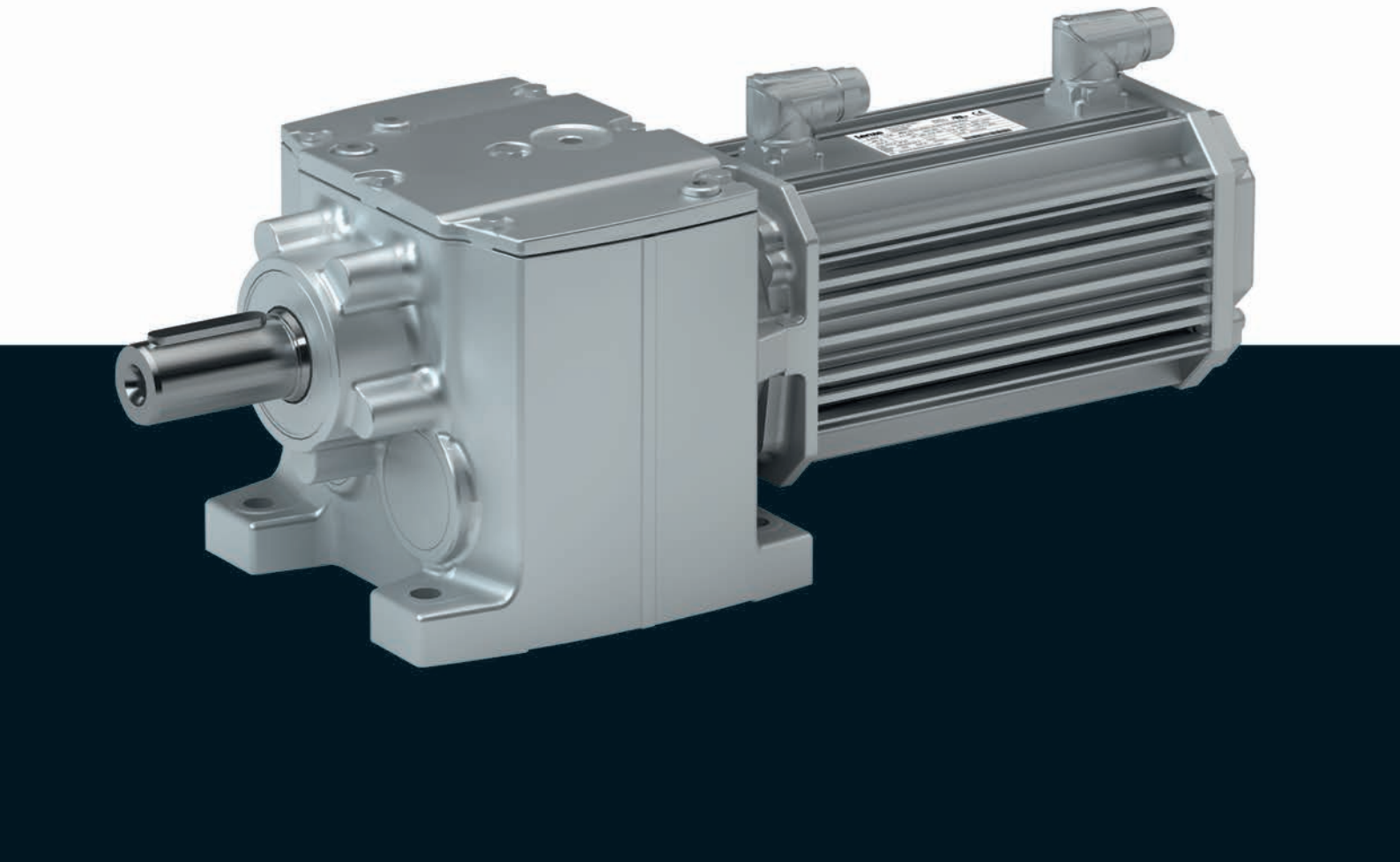

g500-H helical geared motors

Contents



General information	List of abbreviations	6.3 - 5
	Product information	6.3 - 6
	Equipment	6.3 - 7
	The gearbox kit	6.3 - 8
	Dimensioning	6.3 - 14
Technical data	Selection tables, notes	6.3 - 19
	Selection tables	6.3 - 20
	Dimensions, notes	6.3 - 28
	Dimensions, self-ventilated motors	6.3 - 29
	Dimensions, forced ventilated motors	6.3 - 44
	Weights, self-ventilated motors	6.3 - 59
	Weights, forced ventilated motors	6.3 - 60
	Surface and corrosion protection	6.3 - 61

Contents





List of abbreviations

c		Load capacity
i		Ratio
J	[kgcm²]	Moment of inertia
m	[kg]	Mass
M_2	[Nm]	Output torque
$M_{2, max}$	[Nm]	Max. output torque
$n_{2, eto}$	[r/min]	Transition speed
$n_{2, th}$	[r/min]	Thermal limit speed

CCC	China Compulsory Certificate
CE	Communauté Européenne
CSA	Canadian Standards Association
cURus	Combined certification marks of UL for the USA and Canada
DIN	Deutsches Institut für Normung e.V.
EMC	Electromagnetic compatibility
EN	European standard
GOST	Certificate for Russian Federation
IEC	International Electrotechnical Commission
IM	International Mounting Code
IP	International Protection Code
NEMA	National Electrical Manufacturers Association
UL	Underwriters Laboratory Listed Product
UR	Underwriters Laboratory Recognized Product
VDE	Verband deutscher Elektrotechniker (Association of German Electrical Engineers)



Product information

In combination with servo motors, our helical gearboxes form a compact and powerful drive unit. Numerous options at the input and output end provide for the drive to be exactly adapted to your application.

The robust helical gearboxes feature high permissible radial forces, closely stepped ratios and a low backlash. They are available in 2-pole and 3-pole design with a torque up to 450 Nm and a ratio of up to i= 370.

Versions

- Fine-scaling of size / torque provides for an optimum machine adaptation
- Standardised shaft and flange dimensions for an easy machine integration
- High efficiency
- With MCA asynchronous servo motors, rated torque: 2 Nm ... 61.4 Nm

The product name

Gearbox type	Product range		Design	Rated torque [Nm]	Product
Helical gearbox	g500	-	H	45	g500-H45
				100	g500-H100
				140	g500-H140
				210	g500-H210
				320	g500-H320
				450	g500-H450



Equipment

Overview

The equipment includes all the options available as standard and all the built-on accessories of the product.

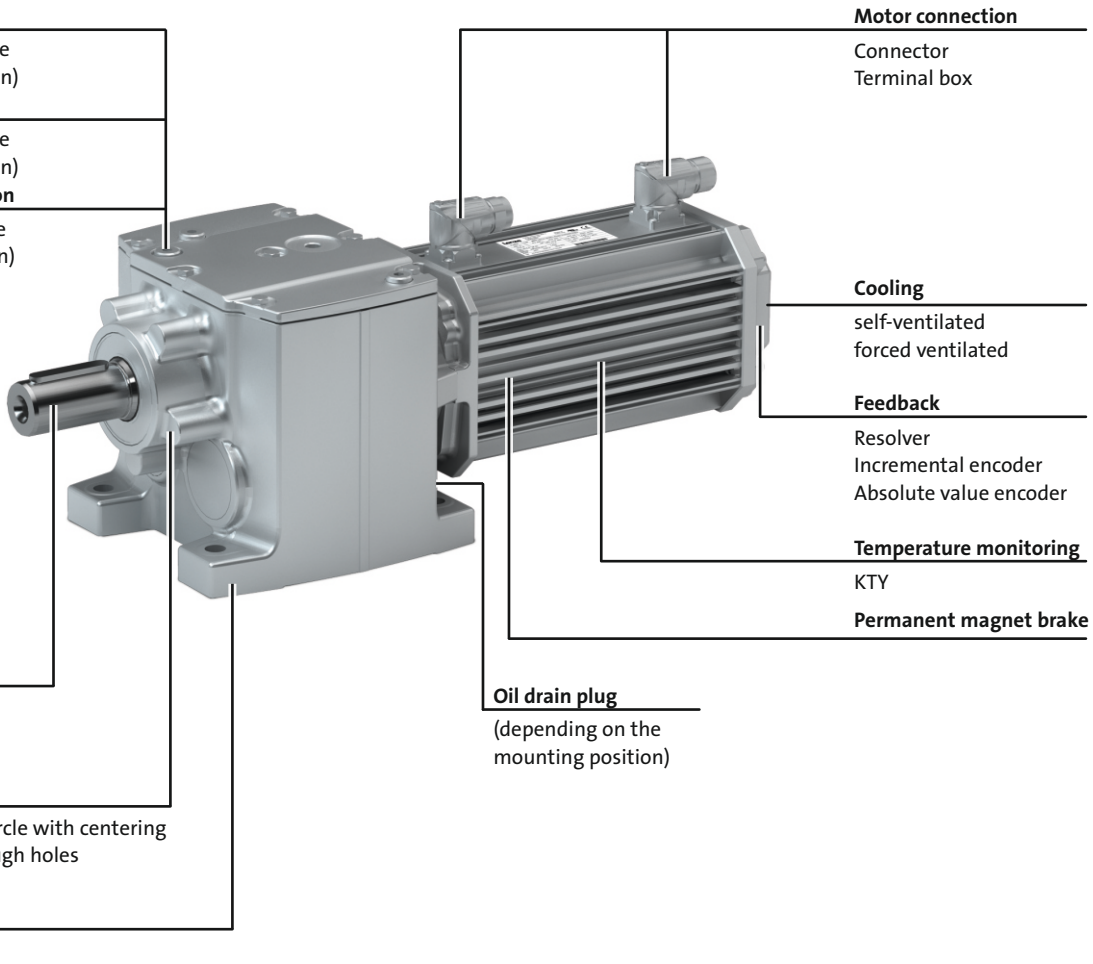



The gearbox kit

Geared motor

Product	g500-H100	g500-H140	g500-H210	g500-H320	g500-H450
Motor type	Asynchronous servo motor				
Servo motor					
2.0 Nm	MCA10				
4.0 - 6.3 Nm	MCA13				
5.4 - 12 Nm			MCA14		
9.5 - 21 Nm				MCA17	
Technical data					
Output torque	See selection table				
Output speed	See selection table				
Ratio	See selection table				
Load capacity	See selection table				
Moment of inertia	See selection table				
Mounting position					
Standard	A/B/C/D/E/F				
Combined	AEF				
Colour	Not coated Primed Paint in various corrosion-protection designs in accordance with RAL colours				
Surface and corrosion protection	Without OKS(uncoated) OKS-G (primed) OKS-S (small) OKS-M (medium) OKS-L (large)				



The gearbox kit

Mounting positions

► Mounting position (A to F) and position of system blocks (1 to 6)

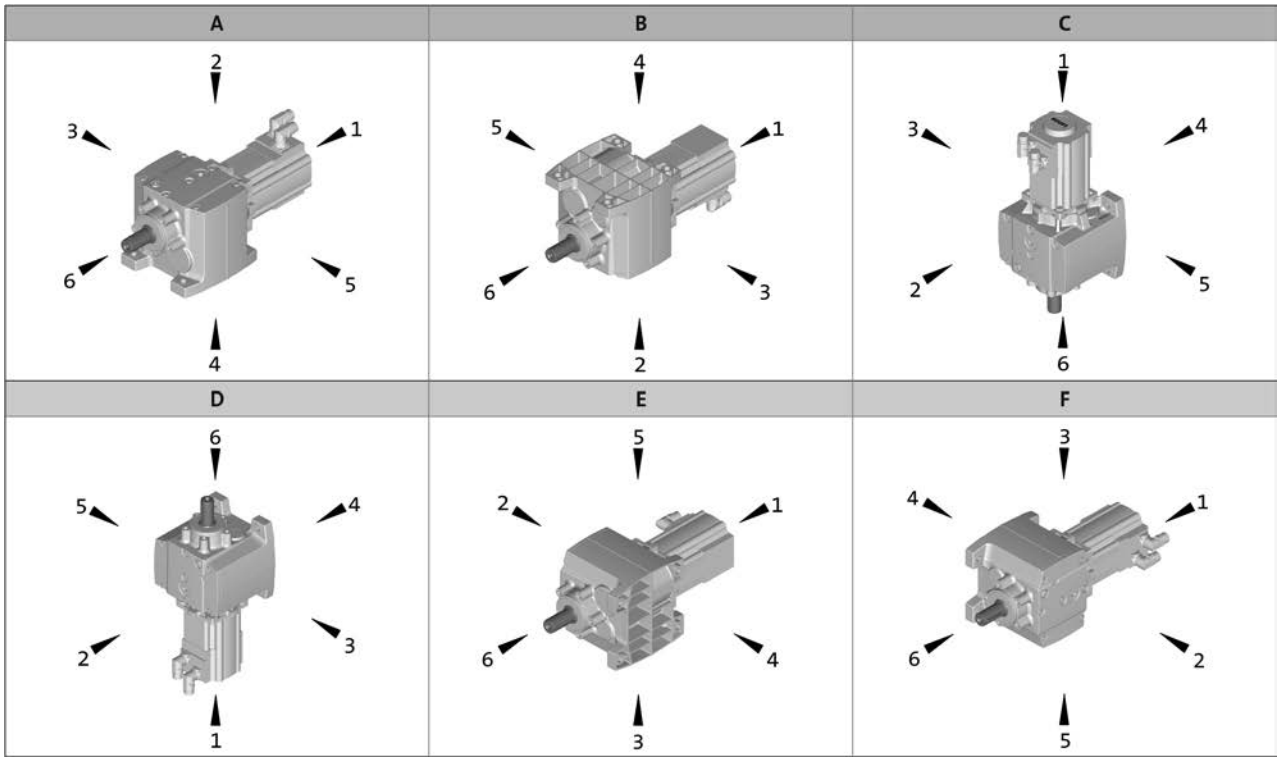

Connector / terminal box: 2, 3, 4, 5



The gearbox kit

Motor details

Product	MCA					
	10I40	13I34 13I41	14L16 14L20 14L35 14L41	17N17 17N23 17N35 17N41	19S17 19S23 19S35 19S42	21X17 21X25 21X35 21X42
Connection type	Plug connectors Terminal box					
Permanent magnet holding brake						
Rated torque [Nm]	3.3	12	15	24	46	88
Brake voltage [V]	DC 24 AC 230					
Feedback	With absolute value encoder With incremental encoder With resolver					
Cooling	Self-ventilated	Self-ventilated Forced-ventilated				
Temperature monitoring	KTY83-110 thermal detector					
Approval	cURus GOST_R UkrSepro					
Enclosure	IP54 IP65					

► Further information and installation feasibilities can be found in the Motors chapter.



The gearbox kit

Motor details

Connection type



Plug connectors



Terminal box

Cooling: self-ventilated



With resolver



With permanent magnet brake



With feedback
With feedback and permanent magnet brake

Cooling: forced ventilated



With resolver



With permanent magnet brake

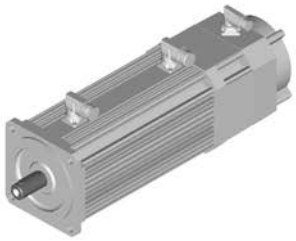

With feedback
With feedback and permanent magnet brake



The gearbox kit

Gearbox details

Product	g500-H45	g500-H100	g500-H140	g500-H210	g500-H320	g500-H450
Driven shaft						
Solid shaft without keyway [mm]		20x40	25x50		30x60	35x70
Solid shaft with featherkey [mm]	14x28 20x40	20x40	25x50		30x60	30x60 35x70
Design	Standard stainless steel					
Gasket	Standard FPM (Viton)					
Bearing	Standard	Standard Reinforced				
Fitting grease	Not enclosed Enclosed					
Housing						
Housing version	With foot Without foot with centering	With foot With foot and centering Without foot with centering				
Output flange						
flange diameter [mm]	120/140/160			120/140/160/200	160/200	160/200/250
Lubricant						
Type	CLP 460 [1)] CLP HC 320 CLP HC 220 CLP HC 220 USDA H1					
Oil-level inspection	Without inspection With inspection					
Breather element	Without				Standard mounting position: Mounted Combined mounting position: loosely enclosed	
Backlash						
Backlash	Standard					

[1)] Not suitable for geared servo motors.

► Further information and installation feasibilities can be found in the Gearboxes chapter.

The gearbox kit

Gearbox details

Solid shaft		
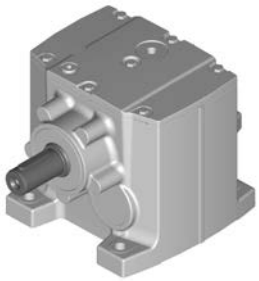 Foot mounting	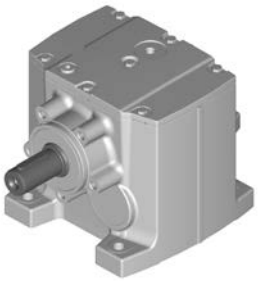 Foot mounting With centering	 Foot mounting Flange with through holes

Solid shaft	
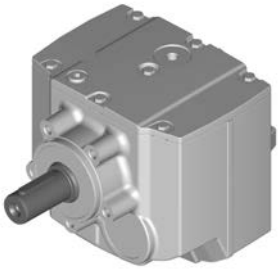 With centering	 Flange with through holes



Dimensioning

General information about the data provided in this catalogue

The powers, torques and speeds specified in this catalogue are rounded values and are valid under the following conditions:

- Operating time/day = 8 h (100% OT)
- Duty class I for up to 10 switching operations/h
- Mounting positions and designs in this catalogue
- Standard lubricant
- T_{amb} = 20 °C for gearboxes,
  T_{amb} = 40 °C for motors (in accordance with EN 60034)
- Site altitude < = 1000 m amsl
- The selection tables provide the permissible mechanical powers and torques. For notes on the thermal power limit, see chapter drive dimensioning.
- The rated power specified for motors and geared motors applies to operating mode S1 (in accordance with EN 60034).

Under different operating conditions, the values obtained may vary from those listed here.
In the case of extreme operating conditions, please consult your Lenze sales office.



Dimensioning

Thermal power limit

The thermal power limit, defined by the heat balance, limits the permissible gearbox continuous power. It may be less than the mechanical power ratings listed in the selection tables.

The thermal power limit is affected by:
- the churning losses in the lubricant. These are determined by the mounting position and the circumferential speed of the gears;
- the load and the speed
- the ambient conditions: temperature, air circulation, input or dissipation via shafts and the foundation

If the following input speeds n_1 are exceeded, please contact Lenze:

Motor frame size	Mounting position A, B, E, F	Mounting position C, D
MCA10 to 14	4000 r/min	3000 r/min
MCA17	3000 r/min	1500 r/min

► For a short period of time up to 5 min, 30 % higher speeds are permissible

Possible ways of extending the application area

- Shaft sealing rings made from FP material/Viton (option)
- Reduction in lubricant quantity
- Cooling of the geared motor by means of air convection on the machine/system



Dimensioning

Load capacity and application factor

Load capacity c of gearbox
Rated value for the load capacity of Lenze geared motors.
- c is the ratio of the permissible rated torque of the gearbox to the rated torque supplied by the drive component (e.g. the built-in Lenze motor).
- The value of c must always be greater than the value of the application factor k calculated for the application.

Application factor k (according to DIN 3990)
Takes into account the influence of temporally variable loads which are actually present during the anticipated operating time of gearboxes and geared motors.
k is determined by:
- the type of load
- the load intensity
- temporal influences

Duty class	Load type
I	Smooth operation, small or light jolts
II	Uneven operation, average jolts
III	Uneven operation, severe jolts and/or alternating load

Application factor k

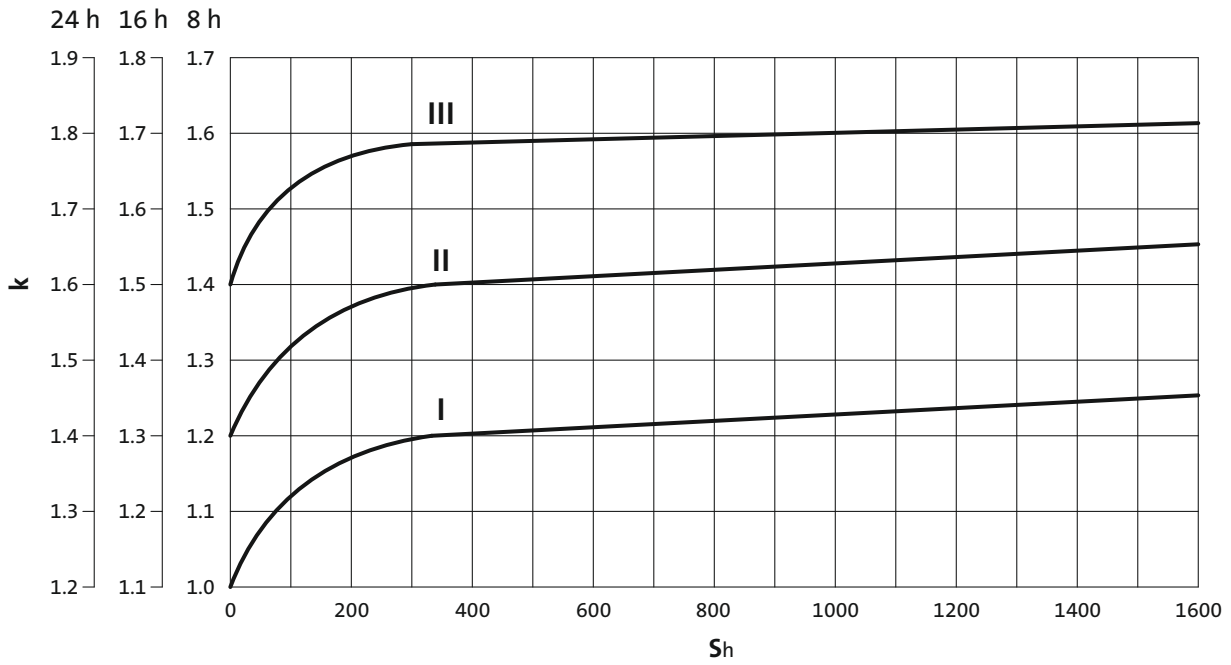

► S_h= switchings/h



Dimensioning

Weights

The values given in the tables consider the following gearbox/motor combination:
- Gearbox with solid shaft including lubricant amount
- Motor with feedback

For versions deviating from this, additional weights have to be considered.

The respective values can be found for:
- Geared motors with feedback
  > Chapter: Geared motors/Technical data
- Motor options: Brake
  > Chapter: Motors/Accessories

Moments of inertia

The given moments of inertia of the gearbox refer to the drive shaft. The influence of the ratio (i^2) has been considered in the data.

When the total moment of inertia of the geared motor is calculated, the values of the geared motors and the brake have to be added.

The respective values can be found for:
- Geared motors with feedback
  > Chapter: Geared motors/Technical data/Selection tables
- Motor options: Brake
  > Chapter: Motors/Accessories





Selection tables, notes

Notes on the selection tables

The selection tables show the available combinations of gearbox type, number of stages, ratio and motor. They are used only to provide basic orientation.
The following legend indicates the structure of the selection tables.

Number of the gear stage of the gearbox

2-stage gearboxes

Inverter operation						i	Product		Cooling	
$M_{2,max}$ [Nm]	$n_{2,th}$ [r/min]	M_2 [Nm]	$n_{2,eto}$ [r/min]	c	J [kgcm²]		g500	MCS		
23	1559	3	1559	4.3	0.500	2.597	-H45	06F41	Selbst	34
23	1559	4	1559	3.4	0.600	2.597	-H45	06I41	Selbst	34
24	1187	4	1187	3.4	0.400	3.413	-H45	06F41	Selbst	34
24	1187	5	1187	2.8	0.500	3.413	-H45	06I41	Selbst	34

For operating mode S1
Torque **M_2** and
thermal output speed **$n_{2,th}$**

For operating mode S2,S3 und S6
Max. permissible acceleration torque of geared motor **$M_{2,max}$** and
output speed **$n_{2,eto}$**

Moment of inertia of geared motor

Ratio i

Product Gearbox

Product Motor

Type of motor cooling

Page number for dimensions

Load capacity of the gearbox
c is the ratio between the permissible rated torque of the gearbox and the rated torque of the three-phase AC motor (converted to the driven shaft).
c must be always higher than the service factor **k** determined for the application **k**.

$$c = \frac{M_{2,zul}}{M_{1,N} \cdot i \cdot \eta_{Getr}} > k$$

6.3



Selection tables

2-stage gearboxes

Umrichterbetrieb						i	Produkt		Kühlung	
$M_{2, max}$ [Nm]	$n_{2, th}$ [r/min]	M_2 [Nm]	$n_{2, eto}$ [r/min]	c	J [kgcm²]		g500	MCA		
45	859	9	859	5.8	2.700	4.600	-H100	10I40	natural	29
57	671	11	671	5.1	2.600	5.887	-H100	10I40	natural	29
62	613	12	613	4.8	2.600	6.440	-H100	10I40	natural	29
80	481	16	481	4.2	2.500	8.214	-H100	10I40	natural	29
81	688	23	688	2.5	8.500	5.887	-H100	13I41	natural	29
81	579	36	579	1.7	8.500	5.887	-H100	13I34	forced	44
82	1013	20	1013	3.1	9.200	3.267	-H140	13I34	forced	47
83	629	25	629	2.4	8.500	6.440	-H100	13I41	natural	29
83	530	39	530	1.6	8.500	6.440	-H100	13I34	forced	44
88	436	18	436	4.0	2.600	9.068	-H100	10I40	natural	29
92	493	32	493	2.1	8.400	8.214	-H100	13I41	natural	29
92	415	50	415	1.4	8.400	8.214	-H100	13I34	forced	44
94	761	27	761	2.6	8.800	4.480	-H140	13I34	forced	47
98	393	20	393	3.7	2.500	10.063	-H100	10I40	natural	29
99	403	39	403	1.8	8.400	10.063	-H100	13I41	natural	29
99	339	62	339	1.2	8.400	10.063	-H100	13I34	forced	44
100	348	22	348	3.3	2.600	11.360	-H100	10I40	natural	29
100	320	49	320	1.5	8.400	12.653	-H100	13I41	natural	29
100	312	25	312	3.0	2.500	12.653	-H100	10I40	natural	29
100	273	28	273	2.6	2.500	14.490	-H100	10I40	natural	29
100	261	60	261	1.2	8.400	15.500	-H100	13I41	natural	29
100	255	30	255	2.4	2.500	15.500	-H100	10I40	natural	29
100	228	69	228	1.0	8.400	17.750	-H100	13I41	natural	29
100	223	34	223	2.1	2.500	17.750	-H100	10I40	natural	29
100	203	38	203	1.9	2.500	19.486	-H100	10I40	natural	29
100	177	43	177	1.7	2.500	22.314	-H100	10I40	natural	29
100	157	49	157	1.5	2.400	25.095	-H100	10I40	natural	29
100	137	56	137	1.5	2.400	28.738	-H100	10I40	natural	29
103	706	22	706	3.3	8.700	5.733	-H140	13I41	natural	32
103	595	35	595	2.2	8.700	5.733	-H140	13I34	forced	47
105	646	24	646	3.1	8.600	6.272	-H140	13I41	natural	32
105	544	38	544	2.1	8.600	6.272	-H140	13I34	forced	47
112	342	22	342	4.1	2.600	11.554	-H140	10I40	natural	32
117	506	31	506	2.7	8.500	8.000	-H140	13I41	natural	32
117	426	49	426	1.8	8.500	8.000	-H140	13I34	forced	47
123	313	25	313	3.9	2.600	12.640	-H140	10I40	natural	32
125	413	38	413	2.4	8.500	9.800	-H140	13I41	natural	32
125	348	60	348	1.6	8.500	9.800	-H140	13I34	forced	47
126	590	22	590	5.2	21.000	3.389	-H210	14L20	natural	35
126	483	39	483	3.1	21.000	3.389	-H210	14L16	forced	50



Selection tables

2-stage gearboxes

Umrichterbetrieb						i	Produkt		Kühlung	
$M_{2, max}$ [Nm]	$n_{2, th}$ [r/min]	M_2 [Nm]	$n_{2, eto}$ [r/min]	c	J [kgcm²]		g500	MCA		
132	320	49	320	1.9	8.500	12.640	-H140	13I41	natural	32
135	283	27	283	3.6	2.600	13.957	-H140	10I40	natural	32
140	251	63	251	1.6	8.400	16.122	-H140	13I41	natural	32
140	245	31	245	3.2	2.500	16.122	-H140	10I40	natural	32
140	228	69	228	1.5	8.400	17.802	-H140	13I41	natural	32
140	222	35	222	2.9	2.500	17.802	-H140	10I40	natural	32
140	212	99	212	1.1	8.400	16.122	-H140	13I34	forced	47
140	205	77	205	1.3	8.400	19.750	-H140	13I41	natural	32
140	200	38	200	2.6	2.500	19.750	-H140	10I40	natural	32
140	186	85	186	1.2	8.400	21.808	-H140	13I41	natural	32
140	181	42	181	2.4	2.500	21.808	-H140	10I40	natural	32
140	159	48	159	2.1	2.500	24.829	-H140	10I40	natural	32
140	144	53	144	2.2	2.500	27.415	-H140	10I40	natural	32
140	124	62	124	1.9	2.500	31.976	-H140	10I40	natural	32
140	112	69	112	1.7	2.500	35.308	-H140	10I40	natural	32
143	430	30	430	4.3	20.000	4.648	-H210	14L20	natural	35
143	352	54	352	2.6	20.000	4.648	-H210	14L16	forced	50
158	320	41	320	3.5	20.000	6.250	-H210	14L20	natural	35
158	262	73	262	2.1	20.000	6.250	-H210	14L16	forced	50
159	358	36	358	4.0	20.000	5.583	-H210	14L20	natural	35
159	293	65	293	2.4	20.000	5.583	-H210	14L16	forced	50
165	679	36	679	4.0	37.000	3.389	-H320	17N23	natural	38
165	496	71	496	2.3	37.000	3.389	-H320	17N17	forced	53
165	483	39	483	4.1	20.000	3.389	-H320	14L16	forced	53
171	233	56	233	2.8	20.000	8.571	-H210	14L20	natural	35
171	191	100	191	1.7	20.000	8.571	-H210	14L16	forced	50
172	261	50	261	3.1	20.000	7.657	-H210	14L20	natural	35
172	214	89	214	1.9	20.000	7.657	-H210	14L16	forced	50
182	211	36	211	4.2	2.700	18.750	-H210	10I40	natural	35
182	204	64	204	2.6	20.000	9.799	-H210	14L20	natural	35
182	167	114	167	1.6	20.000	9.799	-H210	14L16	forced	50
183	93	83	93	2.0	2.500	42.593	-H210	10I40	natural	35
186	167	78	167	2.2	20.000	12.000	-H210	14L20	natural	35
186	136	140	136	1.3	20.000	12.000	-H210	14L16	forced	50
189	495	49	495	3.4	37.000	4.648	-H320	17N23	natural	38
189	362	97	362	1.9	37.000	4.648	-H320	17N17	forced	53
189	352	54	352	3.4	20.000	4.648	-H320	14L16	forced	53
189	318	66	318	2.2	8.800	10.720	-H210	13I34	forced	50
189	187	70	187	2.5	20.000	10.720	-H210	14L20	natural	35
189	153	125	153	1.5	20.000	10.720	-H210	14L16	forced	50



Selection tables

2-stage gearboxes

Umrichterbetrieb						i	Produkt		Kühlung	
$M_{2, max}$ [Nm]	$n_{2, th}$ [r/min]	M_2 [Nm]	$n_{2, eto}$ [r/min]	c	J [kgcm²]		g500	MCA		
200	265	59	265	2.4	8.700	15.306	-H210	13I41	natural	35
200	223	94	223	1.6	8.700	15.306	-H210	13I34	forced	50
200	131	99	131	1.8	20.000	15.306	-H210	14L20	natural	35
200	107	178	107	1.1	20.000	15.306	-H210	14L16	forced	50
201	296	53	296	2.7	8.700	13.673	-H210	13I41	natural	35
201	249	84	249	1.8	8.700	13.673	-H210	13I34	forced	50
201	146	89	146	2.0	20.000	13.673	-H210	14L20	natural	35
201	120	159	120	1.2	20.000	13.673	-H210	14L16	forced	50
206	83	93	83	2.0	2.500	47.679	-H210	10I40	natural	35
210	242	65	242	2.3	8.600	16.750	-H210	13I41	natural	35
210	216	73	216	2.1	8.600	18.750	-H210	13I41	natural	35
210	204	102	204	1.6	8.600	16.750	-H210	13I34	forced	50
210	186	85	186	1.8	8.500	21.802	-H210	13I41	natural	35
210	182	115	182	1.4	8.600	18.750	-H210	13I34	forced	50
210	181	42	181	3.6	2.600	21.802	-H210	10I40	natural	35
210	166	95	166	1.6	8.500	24.405	-H210	13I41	natural	35
210	162	47	162	3.2	2.600	24.405	-H210	10I40	natural	35
210	156	133	156	1.2	8.500	21.802	-H210	13I34	forced	50
210	149	105	149	1.6	8.400	27.119	-H210	13I41	natural	35
210	146	53	146	3.3	2.500	27.119	-H210	10I40	natural	35
210	140	149	140	1.1	8.500	24.405	-H210	13I34	forced	50
210	133	118	133	1.4	8.400	30.357	-H210	13I41	natural	35
210	130	59	130	2.9	2.500	30.357	-H210	10I40	natural	35
210	126	166	126	1.1	8.400	27.119	-H210	13I34	forced	50
210	119	109	119	1.8	19.000	16.750	-H210	14L20	natural	35
210	113	68	113	2.5	2.500	35.095	-H210	10I40	natural	35
210	107	122	107	1.6	19.000	18.750	-H210	14L20	natural	35
210	101	76	101	2.3	2.500	39.286	-H210	10I40	natural	35
210	98	195	98	1.1	19.000	16.750	-H210	14L16	forced	50
218	333	72	333	2.6	38.000	6.910	-H320	17N23	natural	38
218	289	45	289	4.4	21.000	6.910	-H320	14L20	natural	38
218	243	144	243	1.5	38.000	6.910	-H320	17N17	forced	53
218	237	80	237	2.6	21.000	6.910	-H320	14L16	forced	53
218	85	90	85	2.2	2.500	46.407	-H320	10I40	natural	38
227	378	64	378	3.1	38.000	6.083	-H320	17N23	natural	38
227	276	127	276	1.7	38.000	6.083	-H320	17N17	forced	53
227	269	71	269	3.1	21.000	6.083	-H320	14L16	forced	53
238	243	99	243	2.1	37.000	9.477	-H320	17N23	natural	38
238	211	62	211	3.5	20.000	9.477	-H320	14L20	natural	38
238	177	198	177	1.2	37.000	9.477	-H320	17N17	forced	53



Selection tables

2-stage gearboxes

Umrichterbetrieb						i	Produkt		Kühlung	
$M_{2, max}$ [Nm]	$n_{2, th}$ [r/min]	M_2 [Nm]	$n_{2, eto}$ [r/min]	c	J [kgcm²]		g500	MCA		
238	173	110	173	2.1	20.000	9.477	-H320	14L16	forced	53
248	75	102	75	2.2	2.500	52.715	-H320	10I40	natural	38
249	276	87	276	2.5	37.000	8.343	-H320	17N23	natural	38
249	240	54	240	4.2	20.000	8.343	-H320	14L20	natural	38
249	201	174	201	1.4	37.000	8.343	-H320	17N17	forced	53
249	196	97	196	2.5	20.000	8.343	-H320	14L16	forced	53
251	103	74	103	2.8	2.500	38.238	-H320	10I40	natural	38
254	281	74	281	2.6	9.000	12.128	-H320	13I34	forced	53
254	190	127	190	1.7	37.000	12.128	-H320	17N23	natural	38
254	165	79	165	2.9	20.000	12.128	-H320	14L20	natural	38
254	135	141	135	1.7	20.000	12.128	-H320	14L16	forced	53
256	488	72	488	3.4	41.000	3.444	-H450	17N17	forced	56
262	257	81	257	2.5	8.900	13.268	-H320	13I34	forced	53
262	173	139	173	1.6	37.000	13.268	-H320	17N23	natural	38
262	151	86	151	2.8	20.000	13.268	-H320	14L20	natural	38
262	123	154	123	1.6	20.000	13.268	-H320	14L16	forced	53
265	319	65	319	3.1	9.000	10.677	-H320	13I34	forced	53
265	215	112	215	2.0	37.000	10.677	-H320	17N23	natural	38
265	187	69	187	3.5	20.000	10.677	-H320	14L20	natural	38
265	157	223	157	1.1	37.000	10.677	-H320	17N17	forced	53
265	153	124	153	2.1	20.000	10.677	-H320	14L16	forced	53
271	292	71	292	2.9	8.900	11.680	-H320	13I34	forced	53
271	197	122	197	1.9	37.000	11.680	-H320	17N23	natural	38
271	171	76	171	3.2	20.000	11.680	-H320	14L20	natural	38
271	144	244	144	1.1	37.000	11.680	-H320	17N17	forced	53
271	140	136	140	1.9	20.000	11.680	-H320	14L16	forced	53
273	72	106	72	2.3	2.500	54.750	-H450	10I40	natural	41
281	239	66	239	3.1	8.700	16.923	-H320	13I41	natural	38
281	202	103	202	2.1	8.700	16.923	-H320	13I34	forced	53
281	136	177	136	1.4	36.000	16.923	-H320	17N23	natural	38
281	118	110	118	2.3	20.000	16.923	-H320	14L20	natural	38
281	97	197	97	1.4	20.000	16.923	-H320	14L16	forced	53
285	91	84	91	3.1	2.500	43.436	-H320	10I40	natural	38
293	356	99	356	2.9	39.000	4.724	-H450	17N17	forced	56
294	272	58	272	3.6	8.700	14.898	-H320	13I41	natural	38
294	229	91	229	2.5	8.700	14.898	-H320	13I34	forced	53
294	154	156	154	1.6	36.000	14.898	-H320	17N23	natural	38
294	134	97	134	2.8	20.000	14.898	-H320	14L20	natural	38
294	110	173	110	1.6	20.000	14.898	-H320	14L16	forced	53
299	195	80	195	2.7	8.600	20.731	-H320	13I41	natural	38



Selection tables

2-stage gearboxes

Umrichterbetrieb						i	Produkt		Kühlung	
$M_{2, max}$ [Nm]	$n_{2, th}$ [r/min]	M_2 [Nm]	$n_{2, eto}$ [r/min]	c	J [kgcm²]		g500	MCA		
299	165	127	165	1.8	8.600	20.731	-H320	13I34	forced	53
299	97	135	97	2.0	20.000	20.731	-H320	14L20	natural	38
299	79	241	79	1.2	20.000	20.731	-H320	14L16	forced	53
307	64	120	64	2.3	2.500	61.875	-H450	10I40	natural	41
313	222	71	222	3.2	8.600	18.250	-H320	13I41	natural	38
313	189	191	189	1.2	20.000	18.250	-H320	14L35	forced	53
313	187	112	187	2.1	8.600	18.250	-H320	13I34	forced	53
313	110	119	110	2.4	20.000	18.250	-H320	14L20	natural	38
313	90	212	90	1.4	20.000	18.250	-H320	14L16	forced	53
315	405	59	405	4.6	40.000	5.678	-H450	17N23	natural	41
315	296	118	296	2.6	40.000	5.678	-H450	17N17	forced	56
320	171	92	171	2.5	8.500	23.754	-H320	13I41	natural	38
320	150	105	150	2.5	8.500	26.983	-H320	13I41	natural	38
320	144	145	144	1.7	8.500	23.754	-H320	13I34	forced	53
320	137	115	137	2.3	8.500	29.548	-H320	13I41	natural	38
320	126	165	126	1.7	8.500	26.983	-H320	13I34	forced	53
320	121	130	121	2.0	8.400	33.564	-H320	13I41	natural	38
320	118	65	118	4.0	2.500	33.564	-H320	10I40	natural	38
320	115	181	115	1.5	8.500	29.548	-H320	13I34	forced	53
320	102	205	102	1.4	8.400	33.564	-H320	13I34	forced	53
322	94	168	94	1.7	8.500	43.313	-H450	13I41	natural	41
322	91	84	91	3.5	2.600	43.313	-H450	10I40	natural	41
322	79	265	79	1.2	8.500	43.313	-H450	13I34	forced	56
323	381	63	381	4.4	38.000	6.045	-H450	17N23	natural	41
323	278	126	278	2.5	38.000	6.045	-H450	17N17	forced	56
323	271	70	271	4.5	21.000	6.045	-H450	14L16	forced	56
334	348	69	348	4.2	38.000	6.613	-H450	17N23	natural	41
334	254	138	254	2.3	38.000	6.613	-H450	17N17	forced	56
334	247	77	247	4.2	21.000	6.613	-H450	14L16	forced	56
354	295	82	295	3.8	39.000	7.787	-H450	17N23	natural	41
354	216	162	216	2.1	39.000	7.787	-H450	17N17	forced	56
354	210	91	210	3.8	22.000	7.787	-H450	14L16	forced	56
366	83	190	83	1.7	8.500	48.950	-H450	13I41	natural	41
366	81	95	81	3.5	2.600	48.950	-H450	10I40	natural	41
366	70	299	70	1.2	8.500	48.950	-H450	13I34	forced	56
370	261	92	261	3.5	38.000	8.800	-H450	17N23	natural	41
370	191	184	191	1.9	38.000	8.800	-H450	17N17	forced	56
370	186	102	186	3.5	22.000	8.800	-H450	14L16	forced	56
383	277	75	277	4.2	9.900	12.320	-H450	13I34	forced	56
384	231	104	231	3.2	38.000	9.965	-H450	17N23	natural	41



Selection tables

2-stage gearboxes

Umrichterbetrieb						i	Produkt		Kühlung	
$M_{2, max}$ [Nm]	$n_{2, th}$ [r/min]	M_2 [Nm]	$n_{2, eto}$ [r/min]	c	J [kgcm²]		g500	MCA		
384	169	208	169	1.8	38.000	9.965	-H450	17N17	forced	56
384	164	116	164	3.2	21.000	9.965	-H450	14L16	forced	56
400	204	118	204	2.9	38.000	11.262	-H450	17N23	natural	41
400	149	235	149	1.6	38.000	11.262	-H450	17N17	forced	56
400	145	131	145	3.0	21.000	11.262	-H450	14L16	forced	56
411	187	129	187	2.8	38.000	12.320	-H450	17N23	natural	41
411	136	257	136	1.5	38.000	12.320	-H450	17N17	forced	56
411	133	143	133	2.8	21.000	12.320	-H450	14L16	forced	56
426	245	85	245	3.8	9.500	13.905	-H450	13I34	forced	56
426	165	146	165	2.5	37.000	13.905	-H450	17N23	natural	41
426	144	90	144	4.3	20.000	13.905	-H450	14L20	natural	41
426	121	290	121	1.4	37.000	13.905	-H450	17N17	forced	56
426	118	162	118	2.6	20.000	13.905	-H450	14L16	forced	56
441	217	96	217	3.5	9.500	15.714	-H450	13I34	forced	56
441	146	165	146	2.3	37.000	15.714	-H450	17N23	natural	41
441	127	102	127	3.9	20.000	15.714	-H450	14L20	natural	41
441	107	328	107	1.3	37.000	15.714	-H450	17N17	forced	56
441	104	183	104	2.3	20.000	15.714	-H450	14L16	forced	56
448	210	75	210	4.3	9.200	19.250	-H450	13I41	natural	41
448	180	202	180	1.7	20.000	19.250	-H450	14L35	forced	56
448	177	118	177	2.9	9.200	19.250	-H450	13I34	forced	56
448	120	202	120	1.9	37.000	19.250	-H450	17N23	natural	41
448	104	125	104	3.3	20.000	19.250	-H450	14L20	natural	41
448	87	402	87	1.1	37.000	19.250	-H450	17N17	forced	56
448	85	224	85	1.9	20.000	19.250	-H450	14L16	forced	56
450	203	178	203	1.9	20.000	17.033	-H450	14L35	forced	56
450	200	104	200	3.3	9.200	17.033	-H450	13I34	forced	56
450	183	86	183	3.8	8.800	22.170	-H450	13I41	natural	41
450	162	97	162	3.3	8.800	25.056	-H450	13I41	natural	41
450	156	232	156	1.5	20.000	22.170	-H450	14L35	forced	56
450	154	136	154	2.5	8.800	22.170	-H450	13I34	forced	56
450	147	107	147	3.4	8.700	27.578	-H450	13I41	natural	41
450	138	263	138	1.3	20.000	25.056	-H450	14L35	forced	56
450	136	153	136	2.2	8.800	25.056	-H450	13I34	forced	56
450	135	178	135	2.2	37.000	17.033	-H450	17N23	natural	41
450	130	121	130	3.0	8.700	31.167	-H450	13I41	natural	41
450	125	289	125	1.3	20.000	27.578	-H450	14L35	forced	56
450	124	169	124	2.3	8.700	27.578	-H450	13I34	forced	56
450	117	111	117	3.7	20.000	17.033	-H450	14L20	natural	41
450	114	139	114	2.6	8.500	35.689	-H450	13I41	natural	41



Selection tables

2-stage gearboxes

Umrichterbetrieb						i	Produkt		Kühlung	
$M_{2, max}$ [Nm]	$n_{2, th}$ [r/min]	M_2 [Nm]	$n_{2, eto}$ [r/min]	c	J [kgcm²]		g500	MCA		
450	111	327	111	1.2	20.000	31.167	-H450	14L35	forced	56
450	109	191	109	2.0	8.700	31.167	-H450	13I34	forced	56
450	104	232	104	1.7	37.000	22.170	-H450	17N23	natural	41
450	100	157	100	2.6	8.500	40.333	-H450	13I41	natural	41
450	99	355	99	1.2	37.000	17.033	-H450	17N17	forced	56
450	96	198	96	2.2	20.000	17.033	-H450	14L16	forced	56
450	96	218	96	1.8	8.500	35.689	-H450	13I34	forced	56
450	92	263	92	1.5	37.000	25.056	-H450	17N23	natural	41
450	90	144	90	2.8	20.000	22.170	-H450	14L20	natural	41
450	85	247	85	1.8	8.500	40.333	-H450	13I34	forced	56
450	80	163	80	2.5	20.000	25.056	-H450	14L20	natural	41
450	74	258	74	1.7	20.000	22.170	-H450	14L16	forced	56
450	73	179	73	2.5	20.000	27.578	-H450	14L20	natural	41
450	65	292	65	1.5	20.000	25.056	-H450	14L16	forced	56
450	64	203	64	2.2	20.000	31.167	-H450	14L20	natural	41
450	59	321	59	1.4	20.000	27.578	-H450	14L16	forced	56
450	53	363	53	1.2	20.000	31.167	-H450	14L16	forced	56



Selection tables

3-stage gearboxes

Umrichterbetrieb						i	Produkt		Kühlung	
$M_{2, max}$ [Nm]	$n_{2, th}$ [r/min]	M_2 [Nm]	$n_{2, eto}$ [r/min]	c	J [kgcm²]		g500	MCA		
210	91	83	91	1.8	2.500	43.390	-H210	10I40	natural	35
210	81	93	81	1.9	2.500	48.571	-H210	10I40	natural	35
210	71	106	71	1.6	2.500	55.529	-H210	10I40	natural	35
210	64	119	64	1.4	2.500	62.160	-H210	10I40	natural	35
210	56	136	56	1.3	2.500	71.026	-H210	10I40	natural	35
210	50	152	50	1.1	2.500	79.507	-H210	10I40	natural	35
210	43	176	43	1.1	2.400	92.205	-H210	10I40	natural	35
320	84	90	84	2.9	2.500	47.276	-H320	10I40	natural	38
320	74	103	74	2.6	2.500	53.703	-H320	10I40	natural	38
320	65	116	65	2.3	2.500	60.502	-H320	10I40	natural	38
320	58	131	58	2.0	2.500	68.726	-H320	10I40	natural	38
320	51	148	51	1.8	2.500	77.387	-H320	10I40	natural	38
320	45	168	45	1.7	2.500	87.906	-H320	10I40	natural	38
320	39	192	39	1.5	2.400	100.462	-H320	10I40	natural	38
320	35	218	35	1.3	2.400	114.118	-H320	10I40	natural	38
422	90	84	90	3.9	2.800	44.124	-H450	10I40	natural	41
450	92	169	92	1.9	8.700	44.124	-H450	13I41	natural	41
450	81	191	81	1.9	8.700	49.867	-H450	13I41	natural	41
450	79	95	79	3.9	2.800	49.867	-H450	10I40	natural	41
450	77	266	77	1.3	8.700	44.124	-H450	13I34	forced	56
450	72	216	72	1.7	8.600	56.469	-H450	13I41	natural	41
450	70	108	70	3.4	2.700	56.469	-H450	10I40	natural	41
450	68	300	68	1.3	8.700	49.867	-H450	13I34	forced	56
450	66	236	66	1.6	8.500	61.774	-H450	13I41	natural	41
450	64	118	64	3.1	2.600	61.774	-H450	10I40	natural	41
450	60	340	60	1.1	8.600	56.469	-H450	13I34	forced	56
450	58	267	58	1.4	8.500	69.813	-H450	13I41	natural	41
450	57	133	57	2.8	2.600	69.813	-H450	10I40	natural	41
450	55	372	55	1.1	8.500	61.774	-H450	13I34	forced	56
450	51	301	51	1.2	8.500	78.794	-H450	13I41	natural	41
450	50	151	50	2.5	2.600	78.794	-H450	10I40	natural	41
450	46	340	46	1.2	8.500	89.048	-H450	13I41	natural	41
450	44	170	44	2.4	2.600	89.048	-H450	10I40	natural	41
450	42	369	42	1.1	8.400	96.522	-H450	13I41	natural	41
450	41	184	41	2.2	2.500	96.522	-H450	10I40	natural	41
450	36	208	36	2.0	2.500	109.083	-H450	10I40	natural	41
450	33	232	33	1.8	2.500	121.342	-H450	10I40	natural	41
450	29	262	29	1.6	2.500	137.133	-H450	10I40	natural	41
450	25	299	25	1.4	2.500	156.274	-H450	10I40	natural	41
450	22	338	22	1.2	2.500	176.611	-H450	10I40	natural	41



Dimensions, notes

Notes on the dimensions

The following legend shows the layout of the dimension sheets.

Product gearbox

g500-H100

Driven shaft design

Abmessungen mit Vollwelle

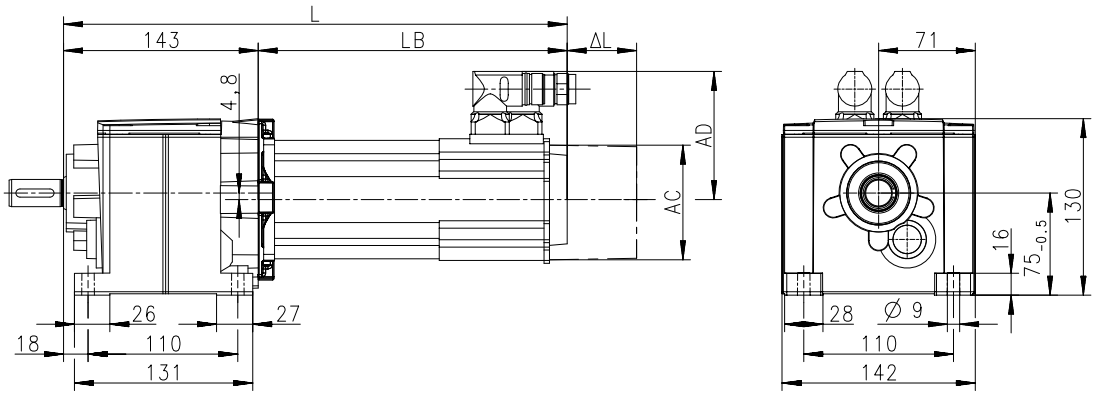

Product Motor

Produkt			MCS						
			06C41	06F41	06I41	09D41	09F38	09H41	09L41
Abmessungen									
Gesamtlänge	**L**	**[mm]**	~~274~~	304	334	327	347	367	407
Länge Motor	**LB**	**[mm]**	~~131.4~~	161.4	191.4	183.9	203.9	223.9	263.9
Länge Motoranbauten	**Δ L**	**[mm]**		100		71			
Motordurchmesser	**AC**	**[mm]**		86		89			
Abstand Motor/Anschluss	**AD**	**[mm]**		77		89.7			

Distance of motor centre to the end of connector

Total length of the drive without built-on accessories

Motor diameter

Motor length without built-on accessories

Additional length of the built-on accessories (longest version)



Dimensions, self-ventilated motors

g500-H100

Dimensions with solid shaft

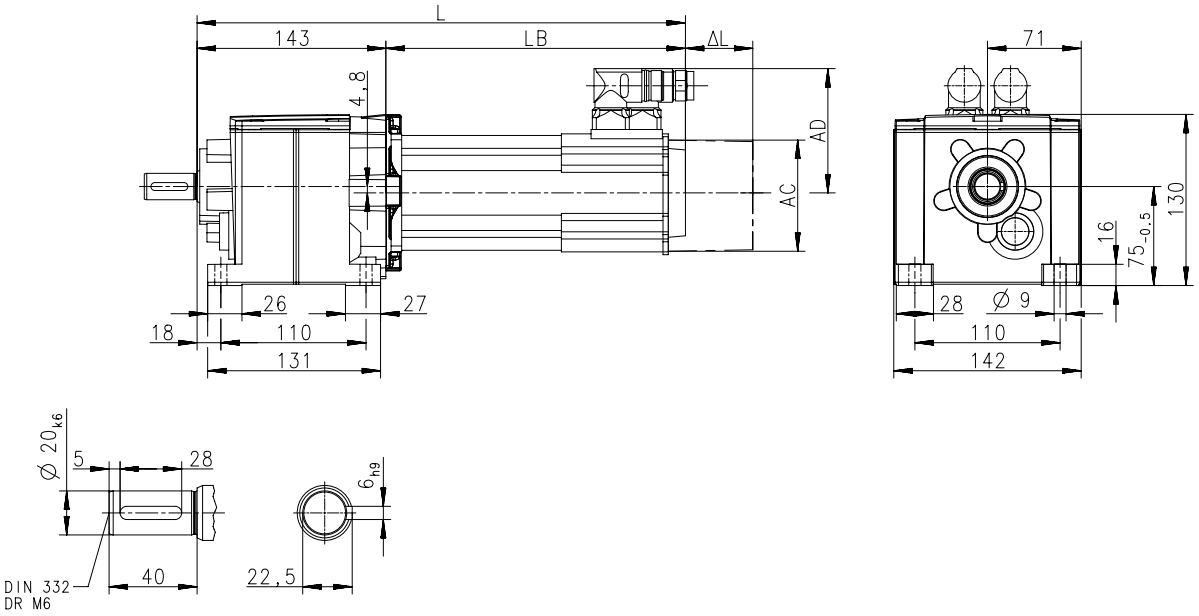

Produkt			MCA	
			10I40	13I41
Abmessungen				
Gesamtlänge	**L**	**[mm]**	402	411
Länge Motor	**LB**	**[mm]**	259	267.5
Länge Motoranbauten	**Δ L**	**[mm]**	78.5	89
Motordurchmesser	**AC**	**[mm]**	102	130
Abstand Motor/Anschluss	**AD**	**[mm]**	90	102



Dimensions, self-ventilated motors

g500-H100

Dimensions with solid shaft and centering

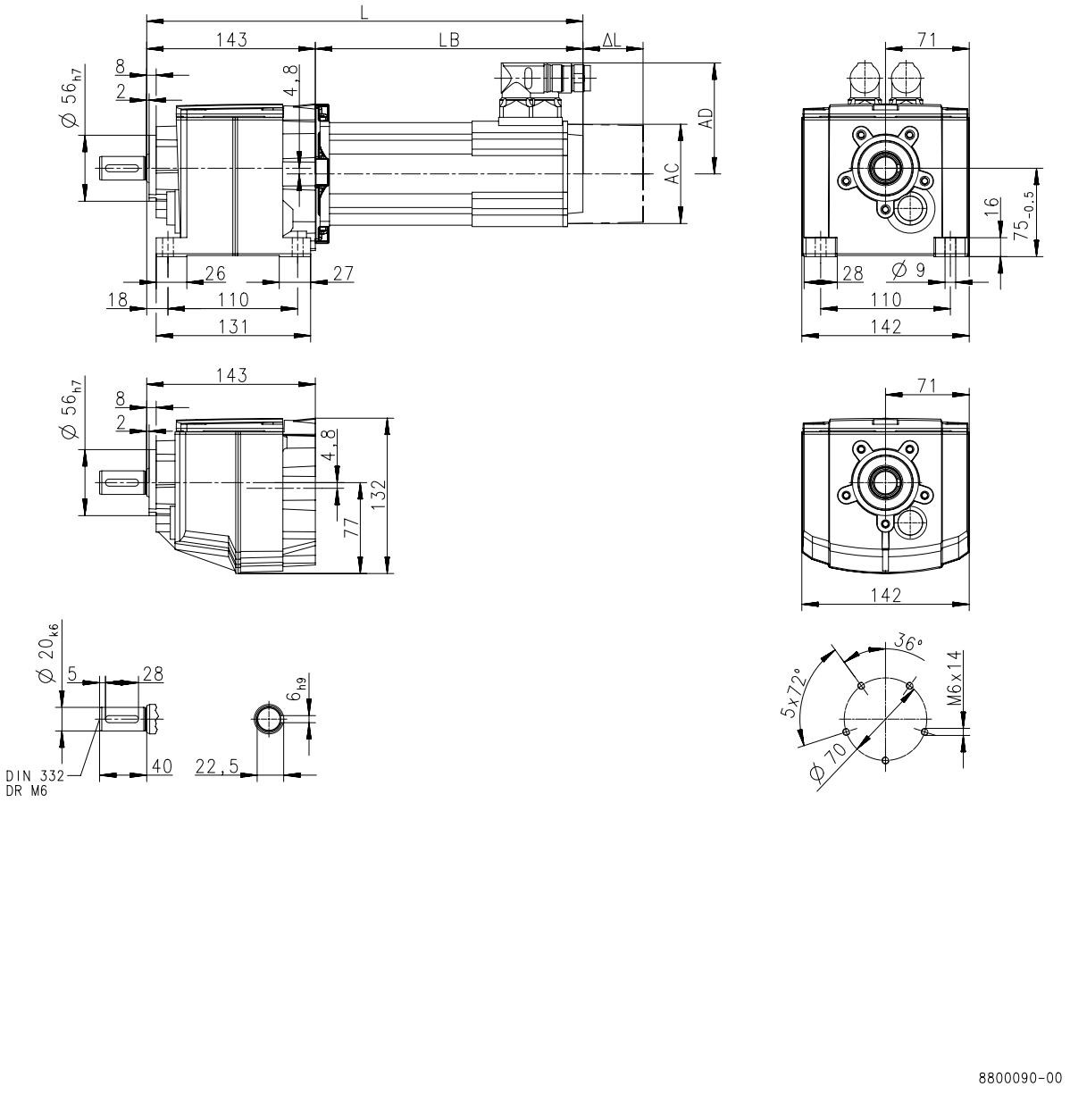

Produkt			MCA	
			10I40	13I41
Abmessungen				
Gesamtlänge	**L**	**[mm]**	402	411
Länge Motor	**LB**	**[mm]**	259	267.5
Länge Motoranbauten	**Δ L**	**[mm]**	78.5	89
Motordurchmesser	**AC**	**[mm]**	102	130
Abstand Motor/Anschluss	**AD**	**[mm]**	90	102



Dimensions, self-ventilated motors

g500-H100

Dimensions with solid shaft and Flange

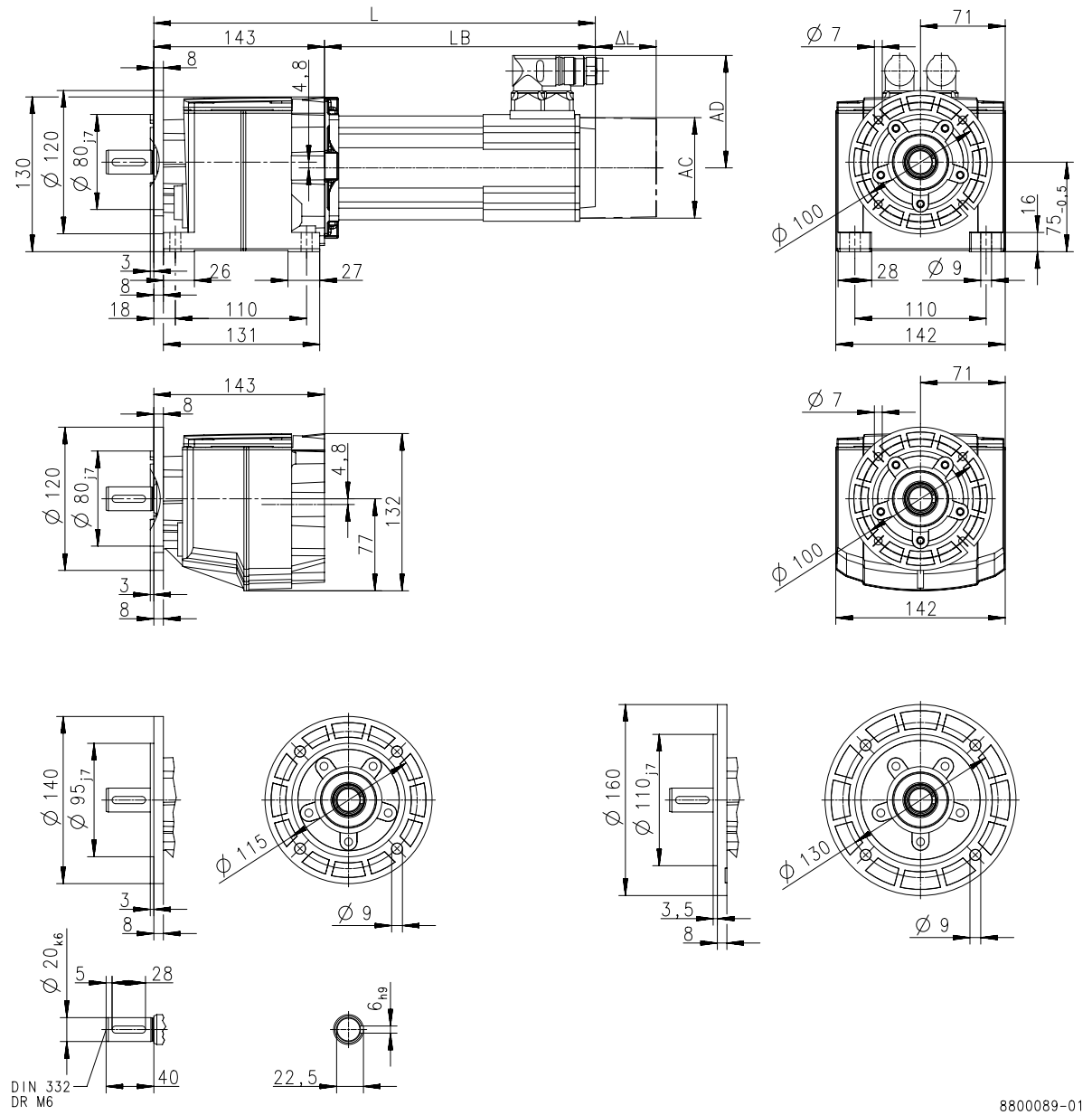

Produkt			MCA	
			10I40	13I41
Abmessungen				
Gesamtlänge	**L**	**[mm]**	402	411
Länge Motor	**LB**	**[mm]**	259	267.5
Länge Motoranbauten	**Δ L**	**[mm]**	78.5	89
Motordurchmesser	**AC**	**[mm]**	102	130
Abstand Motor/Anschluss	**AD**	**[mm]**	90	102



Dimensions, self-ventilated motors

g500-H140

Dimensions with solid shaft

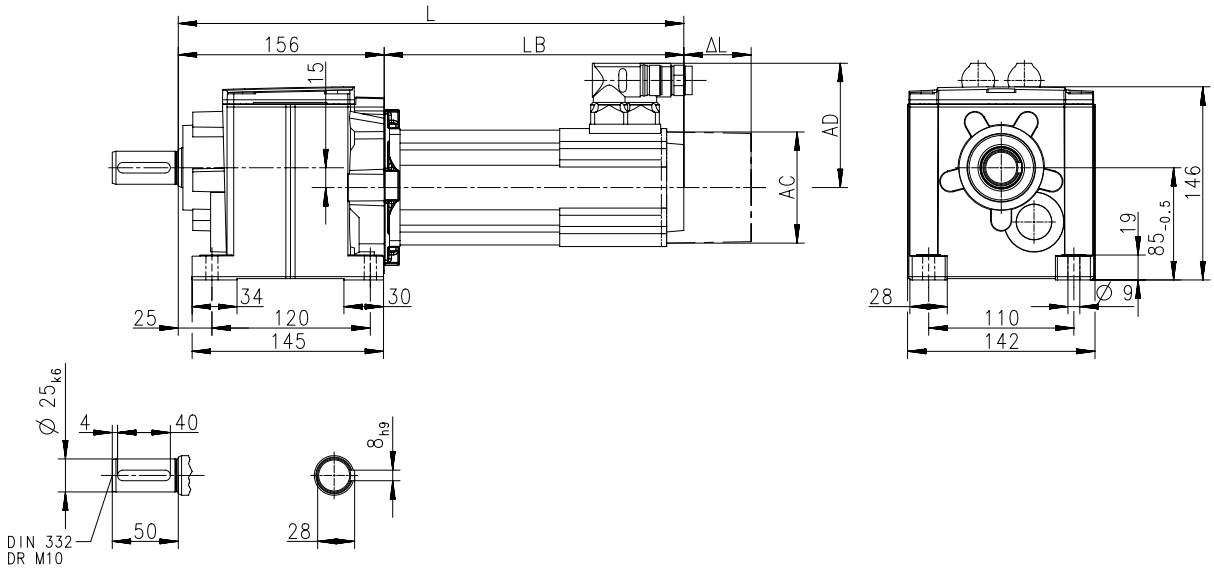

Produkt			MCA	
			10I40	13I41
Abmessungen				
Gesamtlänge	**L**	**[mm]**	415	424
Länge Motor	**LB**	**[mm]**	259	267.5
Länge Motoranbauten	**Δ L**	**[mm]**	78.5	89
Motordurchmesser	**AC**	**[mm]**	102	130
Abstand Motor/Anschluss	**AD**	**[mm]**	90	102



Dimensions, self-ventilated motors

g500-H140

Dimensions with solid shaft and centering

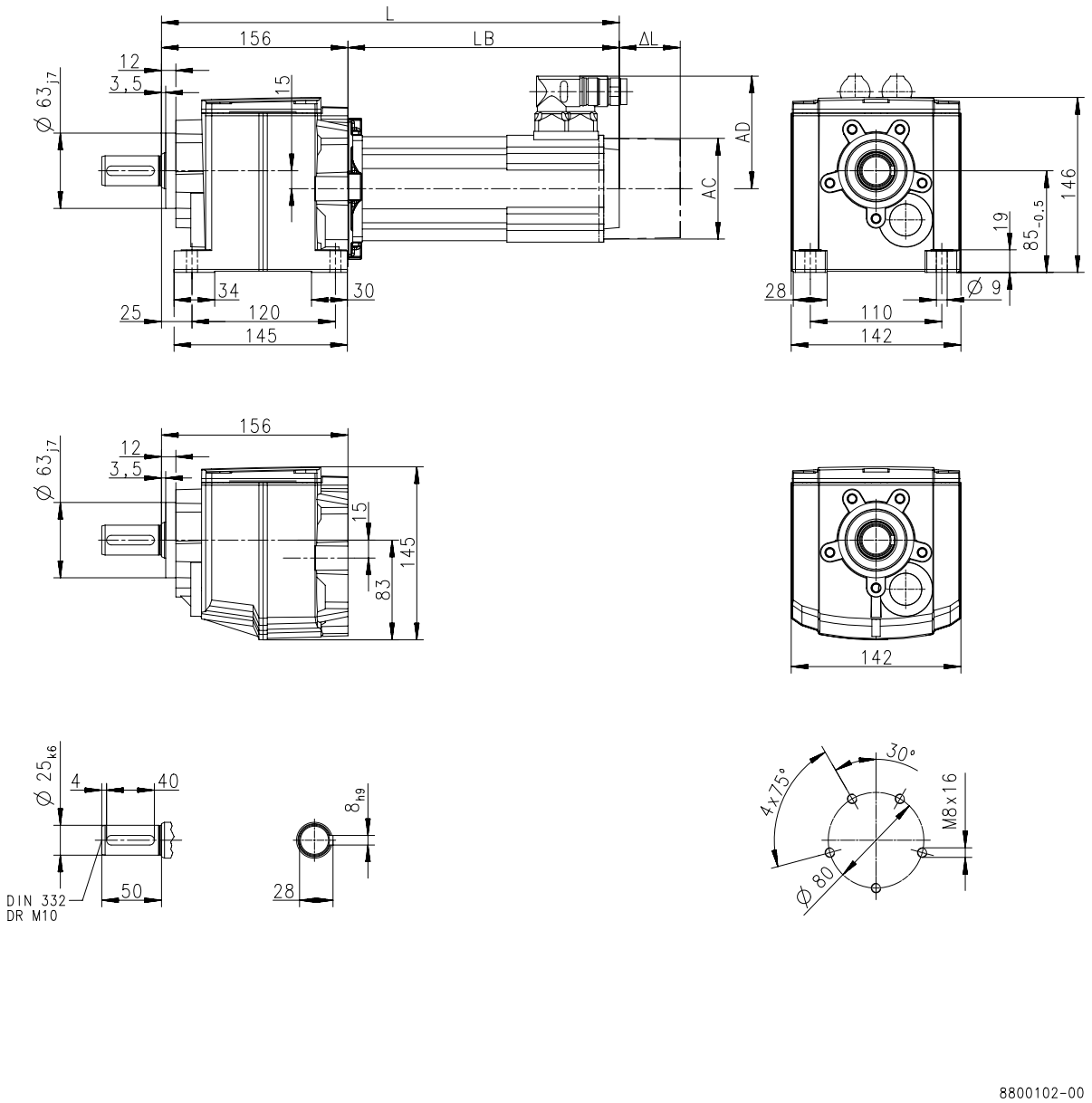

Produkt			MCA	
			10I40	13I41
Abmessungen				
Gesamtlänge	**L**	**[mm]**	415	424
Länge Motor	**LB**	**[mm]**	259	267.5
Länge Motoranbauten	**Δ L**	**[mm]**	78.5	89
Motordurchmesser	**AC**	**[mm]**	102	130
Abstand Motor/Anschluss	**AD**	**[mm]**	90	102



Dimensions, self-ventilated motors

g500-H140

Dimensions with solid shaft and Flange

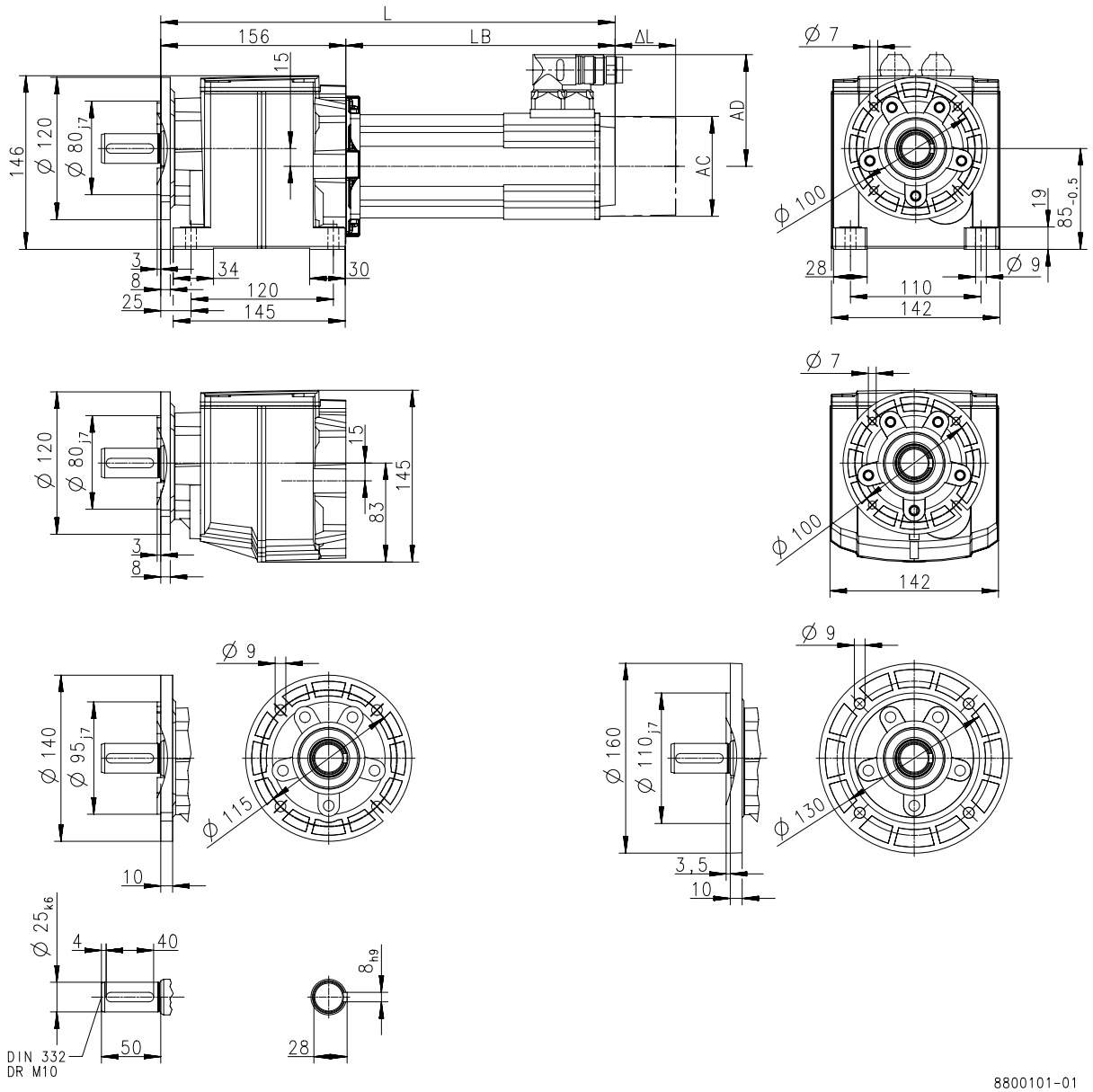

Produkt			MCA	
			10I40	13I41
Abmessungen				
Gesamtlänge	**L**	**[mm]**	415	424
Länge Motor	**LB**	**[mm]**	259	267.5
Länge Motoranbauten	**Δ L**	**[mm]**	78.5	89
Motordurchmesser	**AC**	**[mm]**	102	130
Abstand Motor/Anschluss	**AD**	**[mm]**	90	102



Dimensions, self-ventilated motors

g500-H210

Dimensions with solid shaft

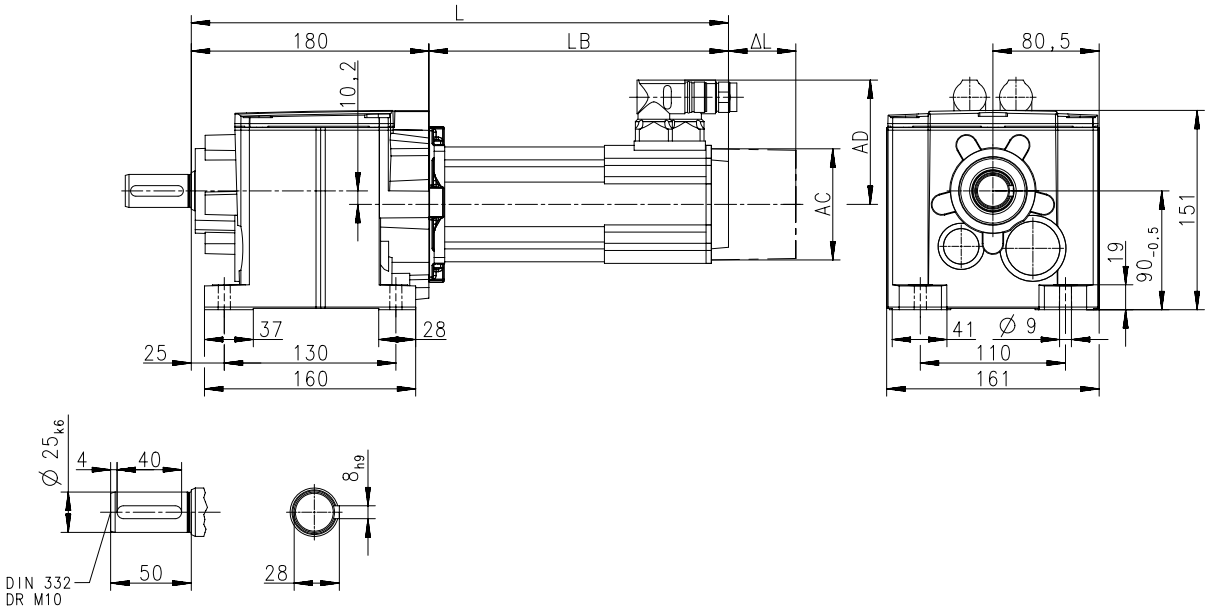

8800112-00

Produkt			MCA		
			10I40	13I41	14L20
Abmessungen					
Gesamtlänge	**L**	**[mm]**	439	448	498
Länge Motor	**LB**	**[mm]**	259	267.5	317.5
Länge Motoranbauten	**Δ L**	**[mm]**	78.5	89	88.5
Motordurchmesser	**AC**	**[mm]**	102	130	142
Abstand Motor/Anschluss	**AD**	**[mm]**	90	102	109



Dimensions, self-ventilated motors

g500-H210

Dimensions with solid shaft and centering

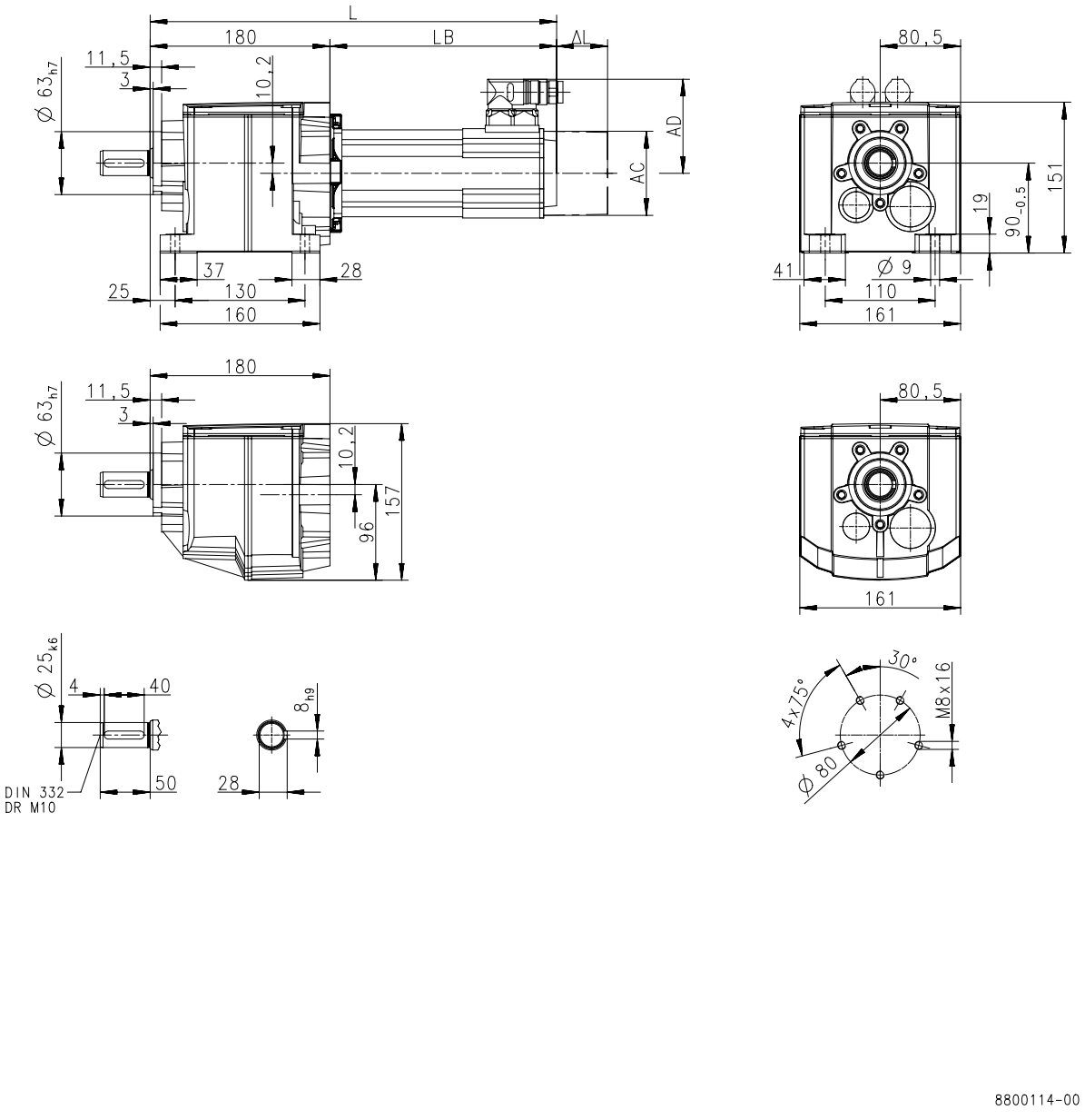

8800114-00

Produkt			MCA		
			10I40	13I41	14L20
Abmessungen					
Gesamtlänge	**L**	**[mm]**	439	448	498
Länge Motor	**LB**	**[mm]**	259	267.5	317.5
Länge Motoranbauten	**Δ L**	**[mm]**	78.5	89	88.5
Motordurchmesser	**AC**	**[mm]**	102	130	142
Abstand Motor/Anschluss	**AD**	**[mm]**	90	102	109



Dimensions, self-ventilated motors

g500-H210

Dimensions with solid shaft and Flange

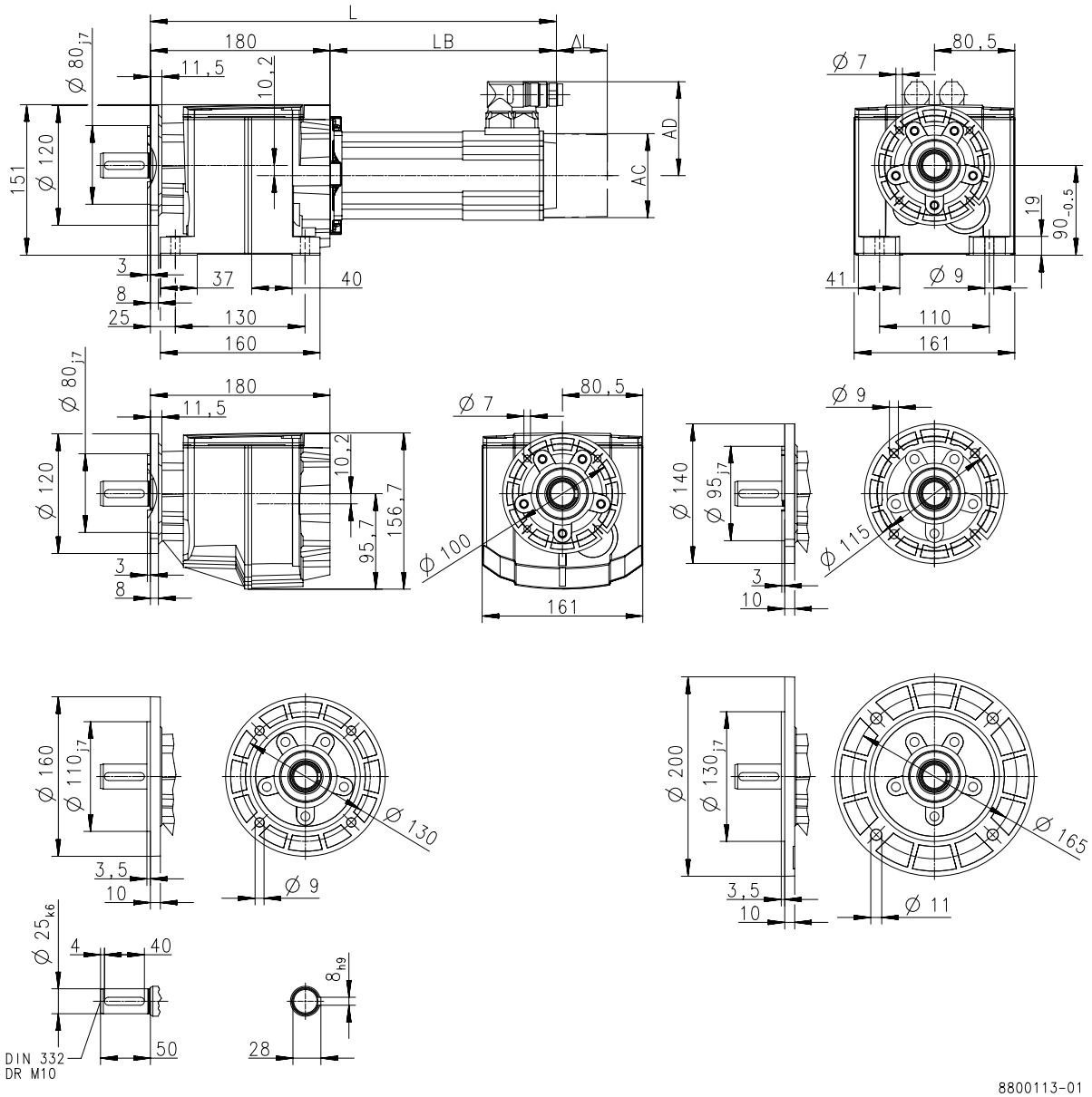

Produkt			MCA		
			10I40	13I41	14L20
Abmessungen					
Gesamtlänge	**L**	**[mm]**	439	448	498
Länge Motor	**LB**	**[mm]**	259	267.5	317.5
Länge Motoranbauten	**Δ L**	**[mm]**	78.5	89	88.5
Motordurchmesser	**AC**	**[mm]**	102	130	142
Abstand Motor/Anschluss	**AD**	**[mm]**	90	102	109



Dimensions, self-ventilated motors

g500-H320

Dimensions with solid shaft

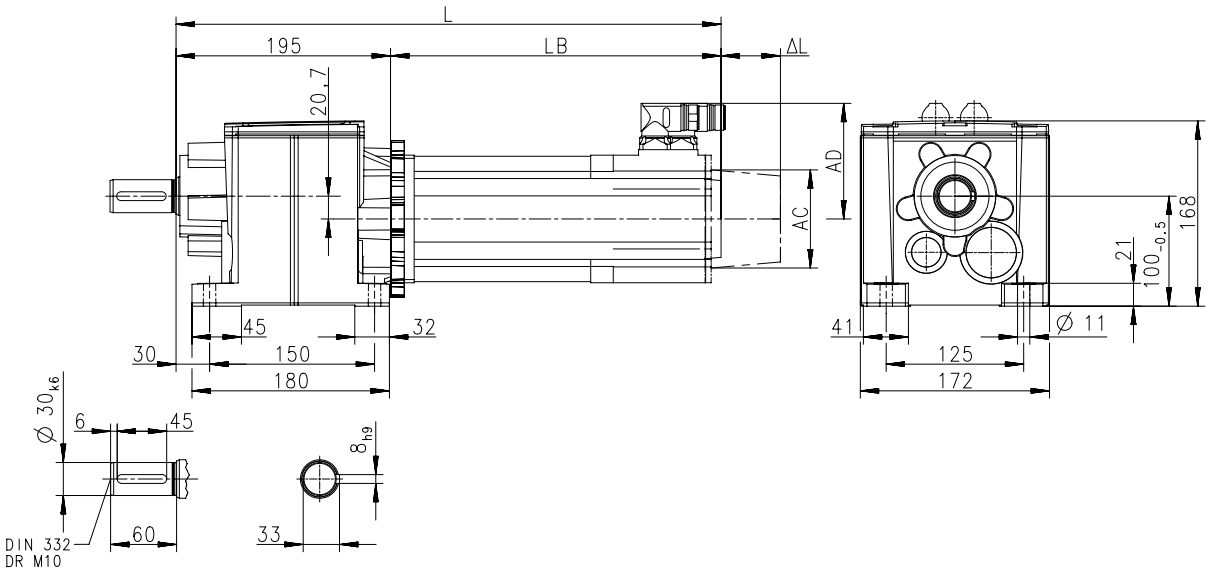

Produkt			MCA			
			10I40	13I41	14L20	17N23
Abmessungen						
Gesamtlänge	**L**	**[mm]**	459	468	518	557
Länge Motor	**LB**	**[mm]**	259	267.5	317.5	356.5
Länge Motoranbauten	**Δ L**	**[mm]**	78.5	89	88.5	89.2
Motordurchmesser	**AC**	**[mm]**	102	130	142	165
Abstand Motor/Anschluss	**AD**	**[mm]**	90	102	109	117.5



Dimensions, self-ventilated motors

g500-H320

Dimensions with solid shaft and centering

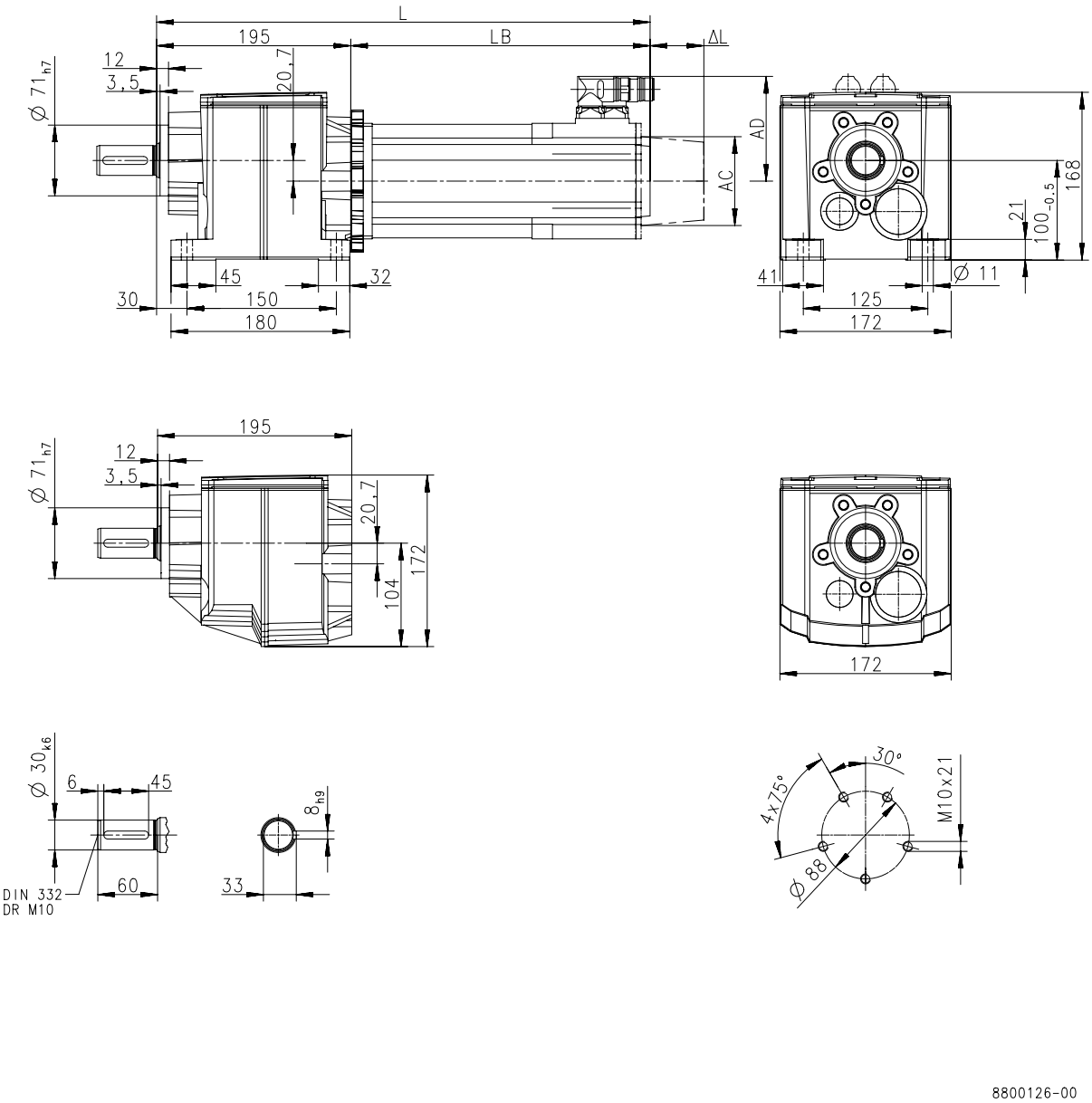

Produkt			MCA			
			10I40	13I41	14L20	17N23
Abmessungen						
Gesamtlänge	**L**	**[mm]**	459	468	518	557
Länge Motor	**LB**	**[mm]**	259	267.5	317.5	356.5
Länge Motoranbauten	**Δ L**	**[mm]**	78.5	89	88.5	89.2
Motordurchmesser	**AC**	**[mm]**	102	130	142	165
Abstand Motor/Anschluss	**AD**	**[mm]**	90	102	109	117.5



Dimensions, self-ventilated motors

g500-H320

Dimensions with solid shaft and Flange

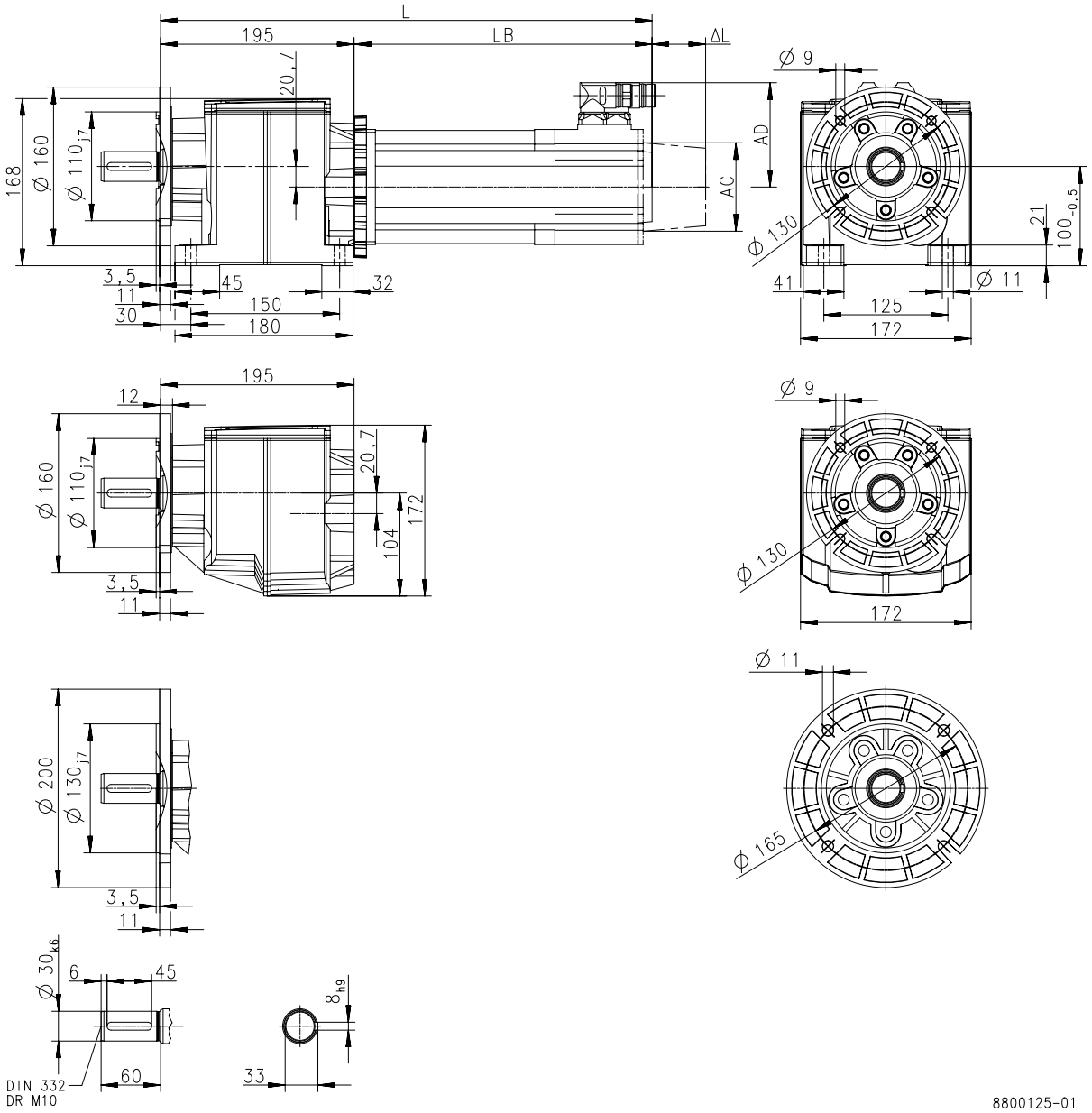

Produkt			MCA			
			10I40	13I41	14L20	17N23
Abmessungen						
Gesamtlänge	**L**	**[mm]**	459	468	518	557
Länge Motor	**LB**	**[mm]**	259	267.5	317.5	356.5
Länge Motoranbauten	**Δ L**	**[mm]**	78.5	89	88.5	89.2
Motordurchmesser	**AC**	**[mm]**	102	130	142	165
Abstand Motor/Anschluss	**AD**	**[mm]**	90	102	109	117.5



Dimensions, self-ventilated motors

g500-H450

Dimensions with solid shaft

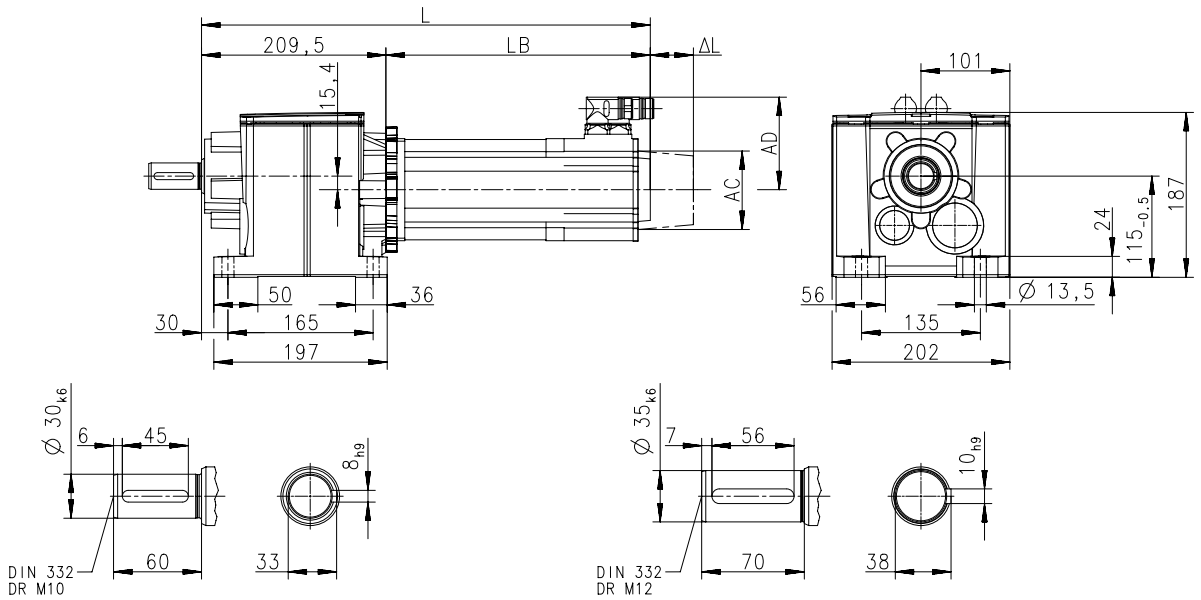

Produkt			MCA			
			10I40	13I41	14L20	17N23
Abmessungen						
Gesamtlänge	**L**	**[mm]**	469	477	527	566
Länge Motor	**LB**	**[mm]**	259	267.5	317.5	356.5
Länge Motoranbauten	**Δ L**	**[mm]**	78.5	89	88.5	89.2
Motordurchmesser	**AC**	**[mm]**	102	130	142	165
Abstand Motor/Anschluss	**AD**	**[mm]**	90	102	109	117.5



Dimensions, self-ventilated motors

g500-H450

Dimensions with solid shaft and centering

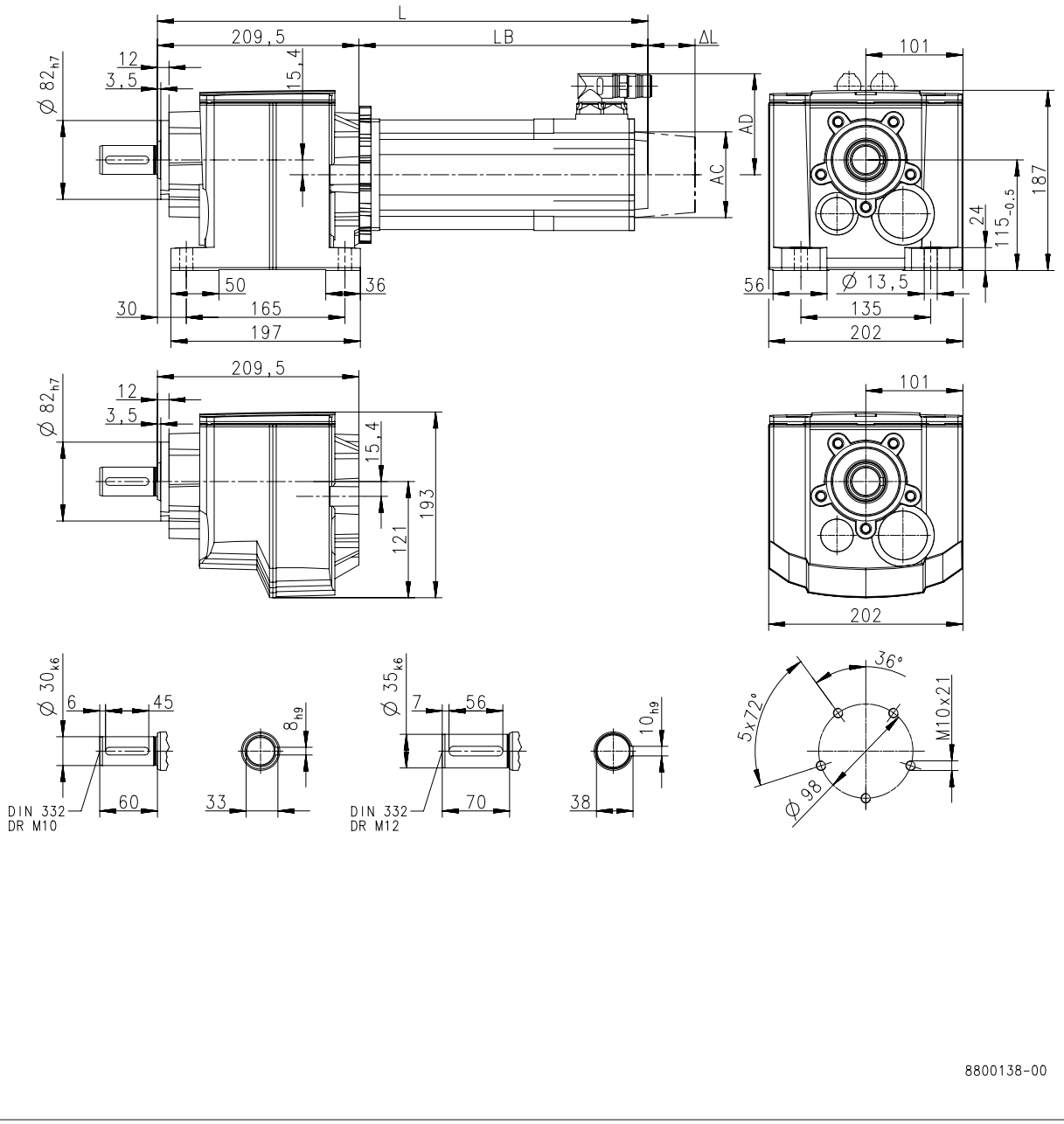

Produkt			MCA			
			10I40	13I41	14L20	17N23
Abmessungen						
Gesamtlänge	**L**	**[mm]**	469	477	527	566
Länge Motor	**LB**	**[mm]**	259	267.5	317.5	356.5
Länge Motoranbauten	**Δ L**	**[mm]**	78.5	89	88.5	89.2
Motordurchmesser	**AC**	**[mm]**	102	130	142	165
Abstand Motor/Anschluss	**AD**	**[mm]**	90	102	109	117.5



Dimensions, self-ventilated motors

g500-H450

Dimensions with solid shaft and Flange

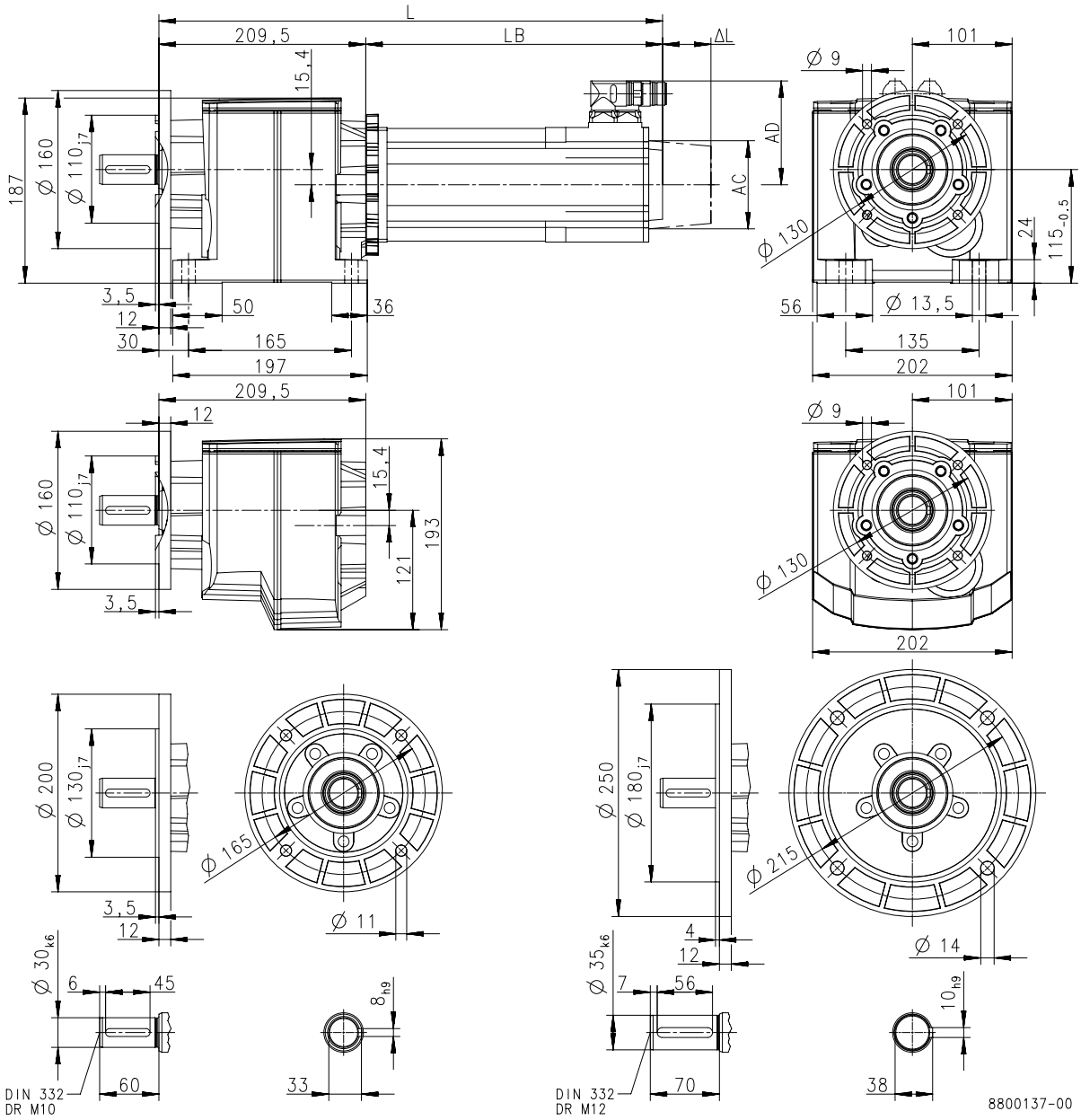

Produkt			MCA			
			10I40	13I41	14L20	17N23
Abmessungen						
Gesamtlänge	**L**	**[mm]**	469	477	527	566
Länge Motor	**LB**	**[mm]**	259	267.5	317.5	356.5
Länge Motoranbauten	**Δ L**	**[mm]**	78.5	89	88.5	89.2
Motordurchmesser	**AC**	**[mm]**	102	130	142	165
Abstand Motor/Anschluss	**AD**	**[mm]**	90	102	109	117.5



Dimensions, forced ventilated motors

g500-H100

Dimensions with solid shaft

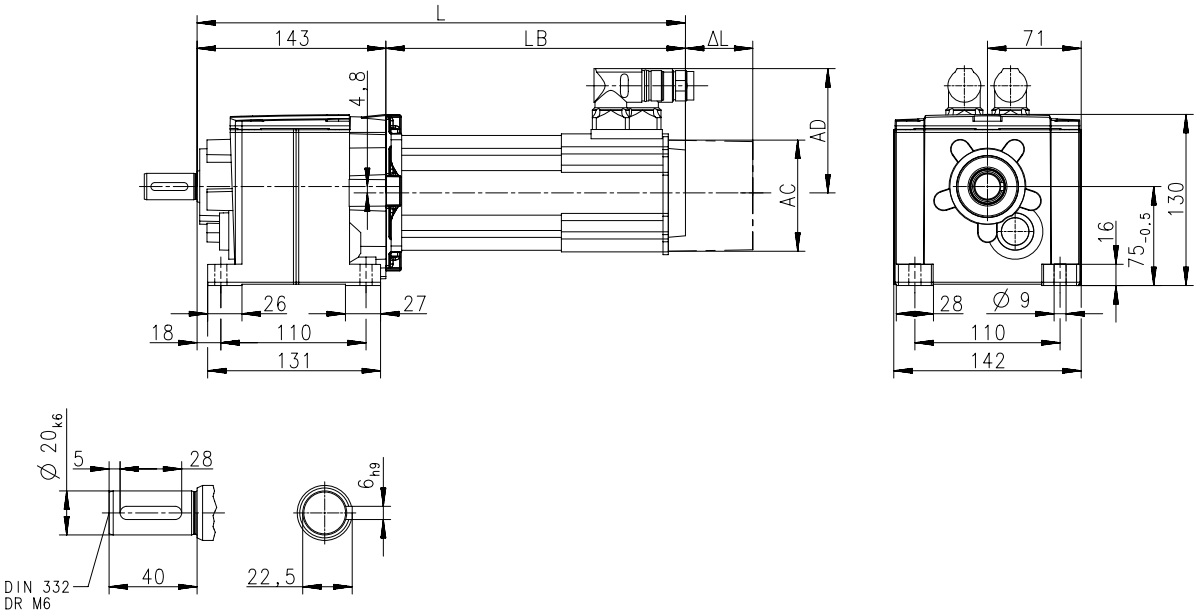

Produkt			MCA
			13I34
Abmessungen			
Gesamtlänge	**L**	**[mm]**	479
Länge Motor	**LB**	**[mm]**	335.5
Länge Motoranbauten	**Δ L**	**[mm]**	89.5
Motordurchmesser	**AC**	**[mm]**	130
Abstand Motor/Anschluss	**AD**	**[mm]**	102



Dimensions, forced ventilated motors

g500-H100

Dimensions with solid shaft and centering

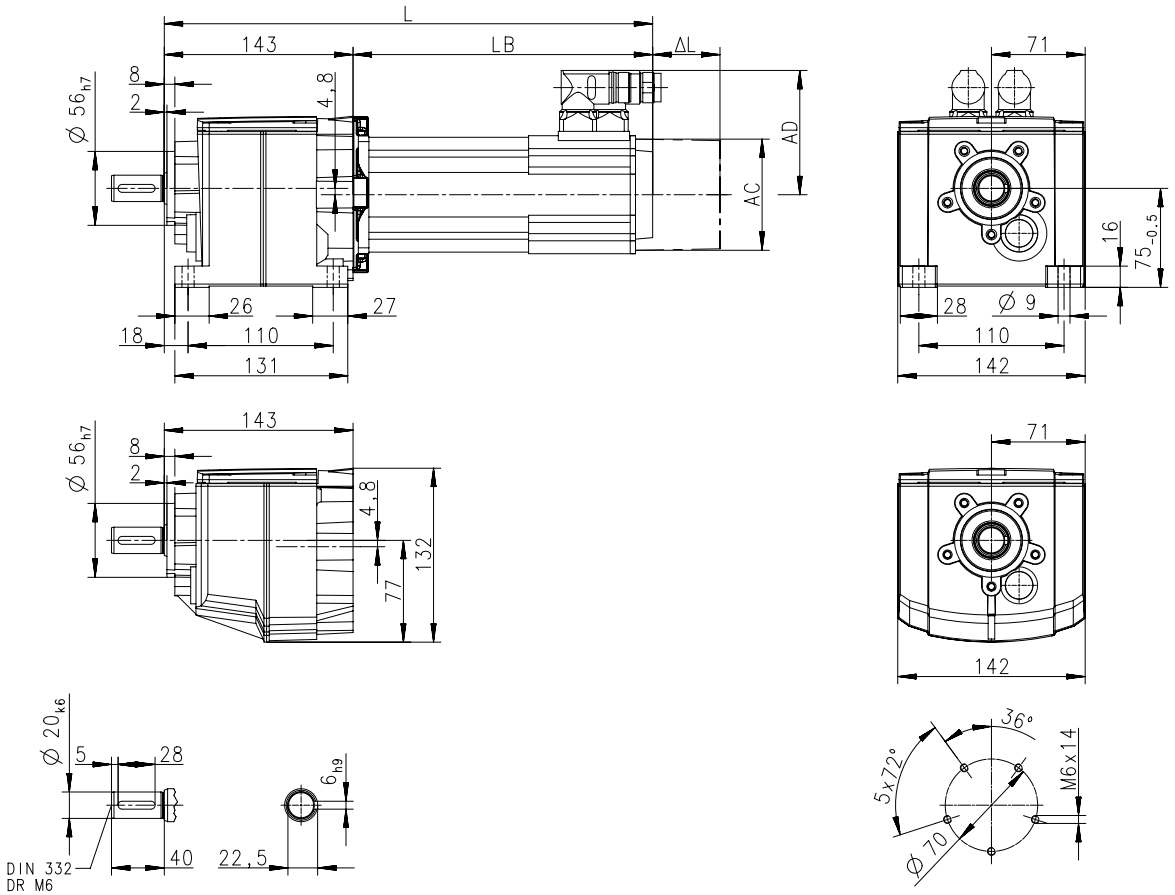

Produkt			MCA
			13I34
Abmessungen			
Gesamtlänge	**L**	**[mm]**	479
Länge Motor	**LB**	**[mm]**	335.5
Länge Motoranbauten	**Δ L**	**[mm]**	89.5
Motordurchmesser	**AC**	**[mm]**	130
Abstand Motor/Anschluss	**AD**	**[mm]**	102



Dimensions, forced ventilated motors

g500-H100

Dimensions with solid shaft and Flange

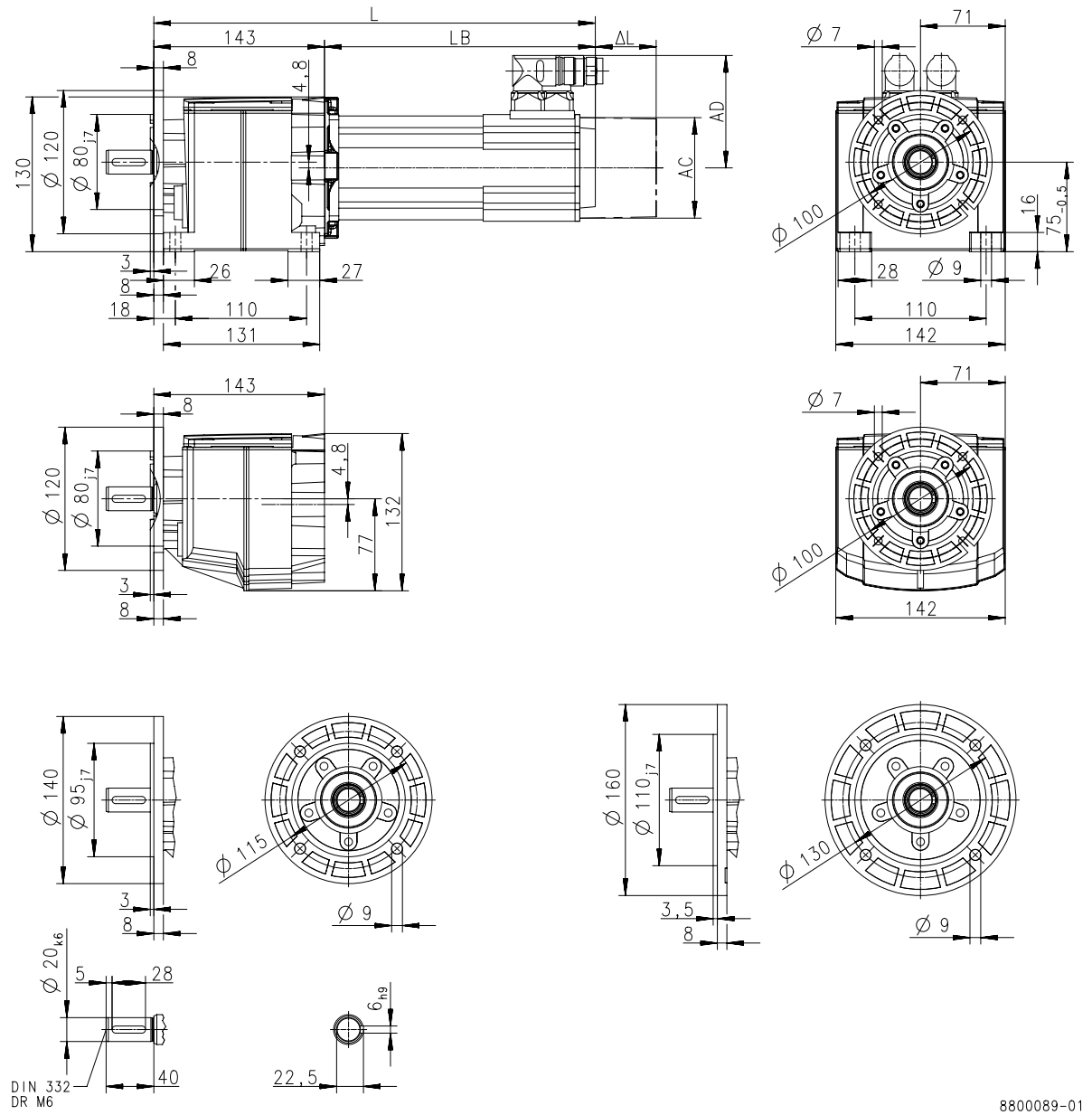

Produkt			MCA
			13I34
Abmessungen			
Gesamtlänge	**L**	**[mm]**	479
Länge Motor	**LB**	**[mm]**	335.5
Länge Motoranbauten	**Δ L**	**[mm]**	89.5
Motordurchmesser	**AC**	**[mm]**	130
Abstand Motor/Anschluss	**AD**	**[mm]**	102



Dimensions, forced ventilated motors

g500-H140

Dimensions with solid shaft

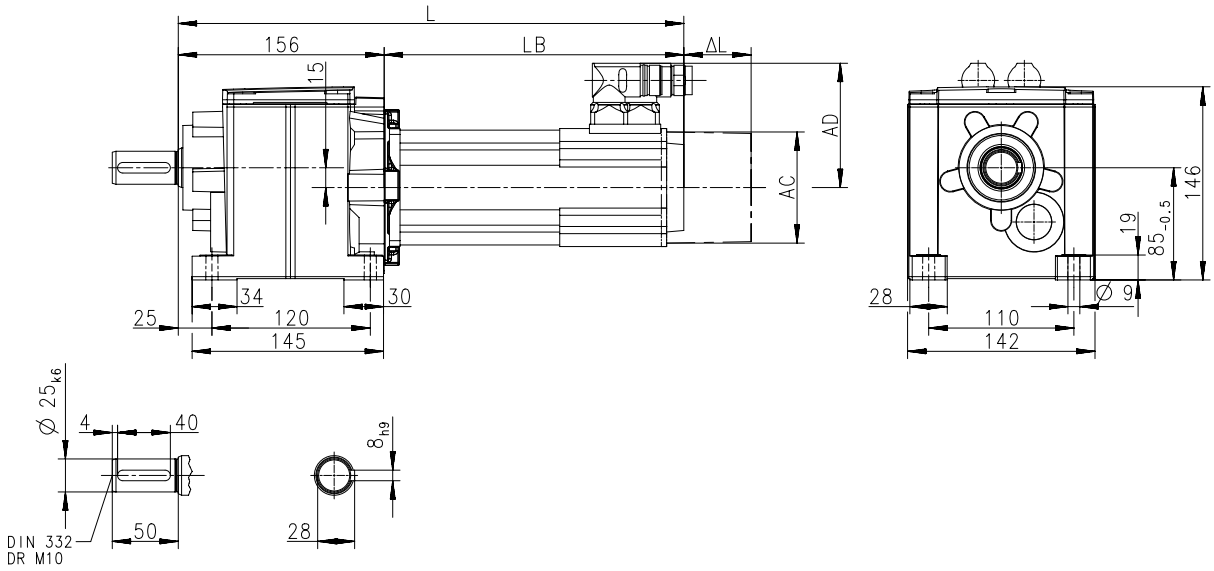

Produkt			MCA
			13I34
Abmessungen			
Gesamtlänge	**L**	**[mm]**	492
Länge Motor	**LB**	**[mm]**	335.5
Länge Motoranbauten	**Δ L**	**[mm]**	89.5
Motordurchmesser	**AC**	**[mm]**	130
Abstand Motor/Anschluss	**AD**	**[mm]**	102



Dimensions, forced ventilated motors

g500-H140

Dimensions with solid shaft and centering

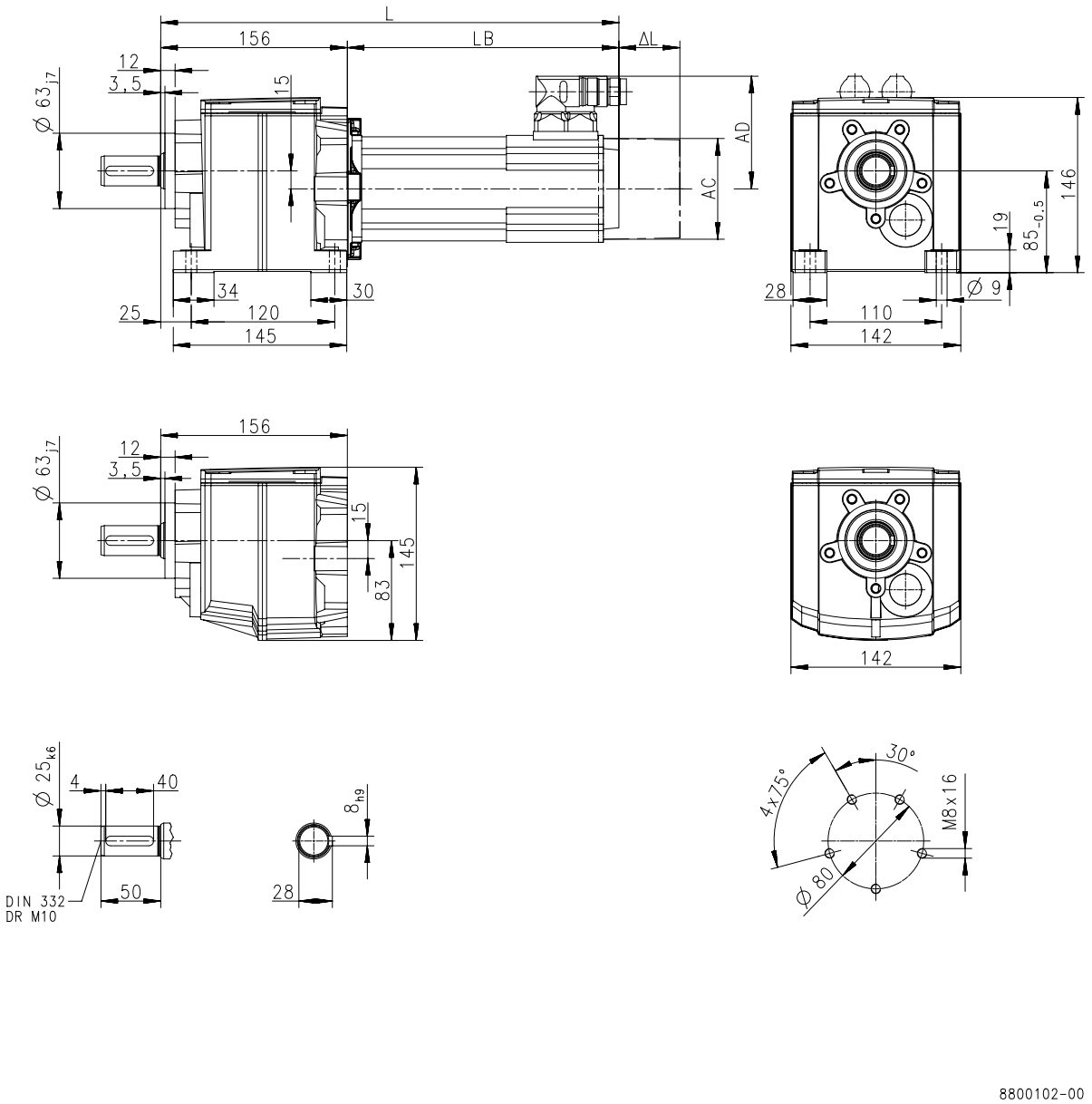

Produkt			MCA
			13I34
Abmessungen			
Gesamtlänge	**L**	**[mm]**	492
Länge Motor	**LB**	**[mm]**	335.5
Länge Motoranbauten	**Δ L**	**[mm]**	89.5
Motordurchmesser	**AC**	**[mm]**	130
Abstand Motor/Anschluss	**AD**	**[mm]**	102



Dimensions, forced ventilated motors

g500-H140

Dimensions with solid shaft and Flange

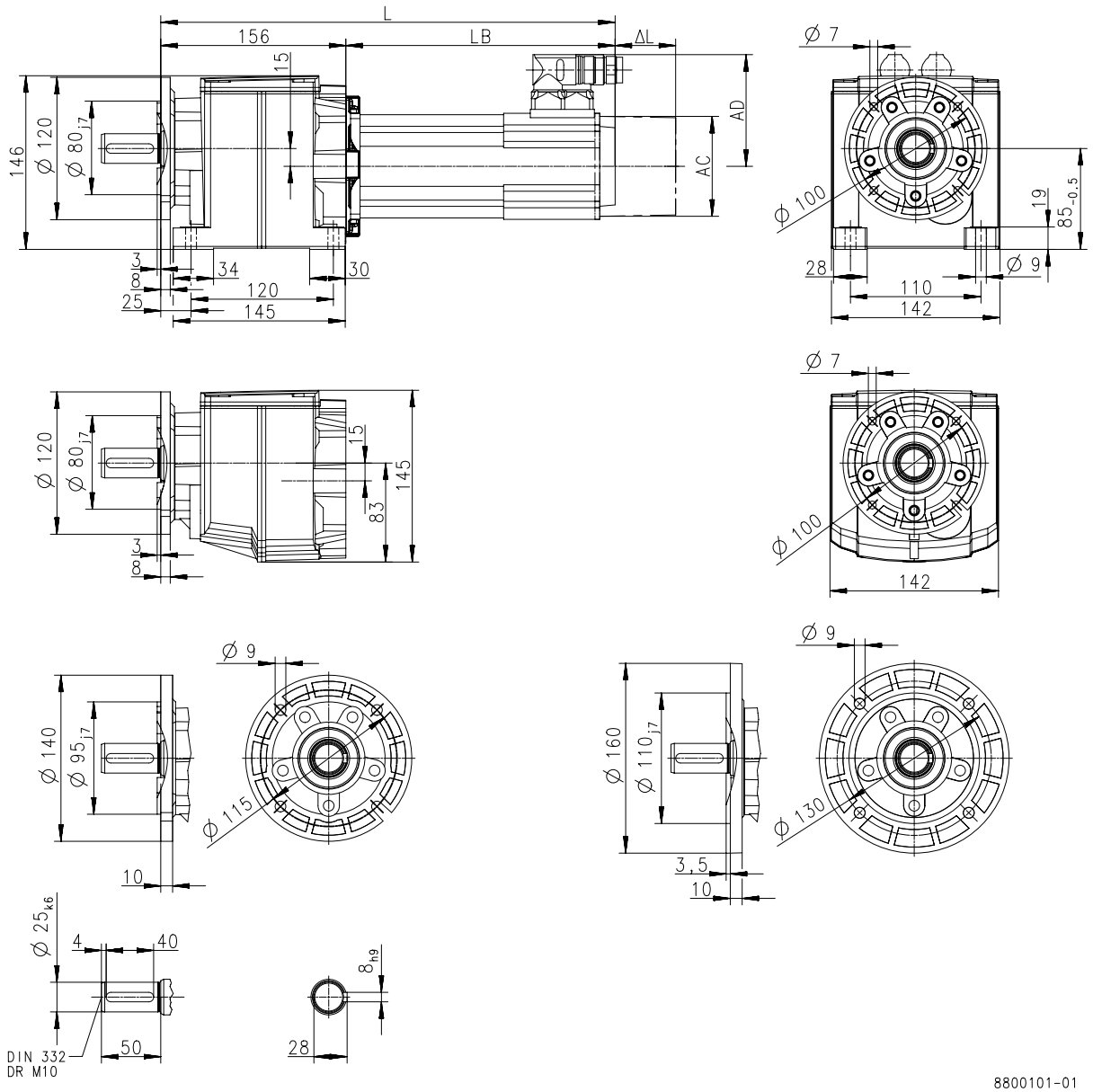

Produkt			MCA
			13I34
Abmessungen			
Gesamtlänge	**L**	**[mm]**	492
Länge Motor	**LB**	**[mm]**	335.5
Länge Motoranbauten	**Δ L**	**[mm]**	89.5
Motordurchmesser	**AC**	**[mm]**	130
Abstand Motor/Anschluss	**AD**	**[mm]**	102



Dimensions, forced ventilated motors

g500-H210

Dimensions with solid shaft

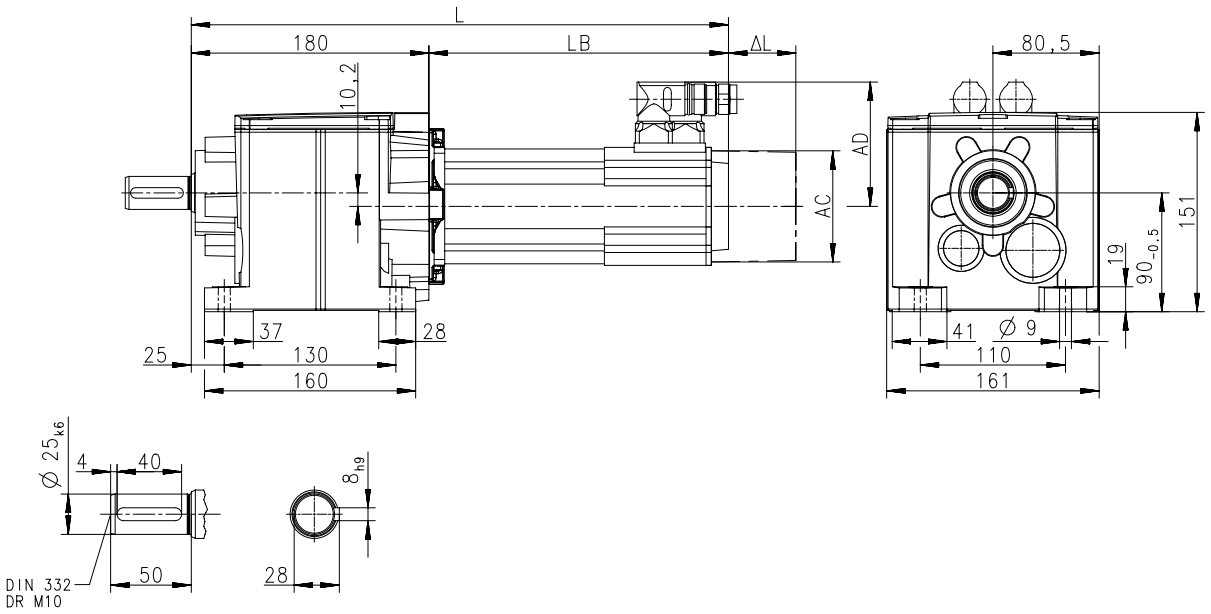

Produkt			MCA	
			13I34	14L16
Abmessungen				
Gesamtlänge	**L**	**[mm]**	516	560
Länge Motor	**LB**	**[mm]**	335.5	379.5
Länge Motoranbauten	**Δ L**	**[mm]**	89.5	88.5
Motordurchmesser	**AC**	**[mm]**	130	142
Abstand Motor/Anschluss	**AD**	**[mm]**	102	109



Dimensions, forced ventilated motors

g500-H210

Dimensions with solid shaft and centering

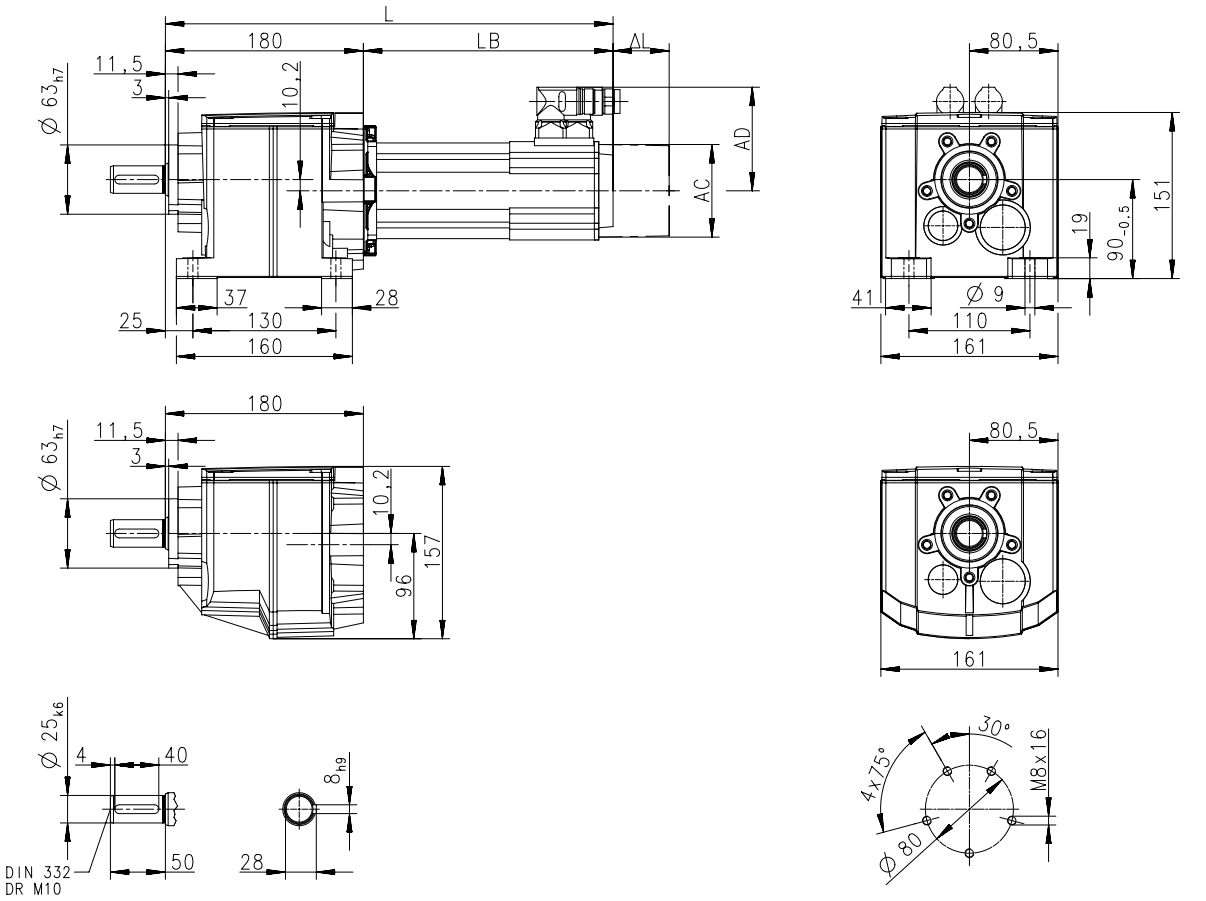

Produkt			MCA	
			13I34	14L16
Abmessungen				
Gesamtlänge	**L**	**[mm]**	516	560
Länge Motor	**LB**	**[mm]**	335.5	379.5
Länge Motoranbauten	**Δ L**	**[mm]**	89.5	88.5
Motordurchmesser	**AC**	**[mm]**	130	142
Abstand Motor/Anschluss	**AD**	**[mm]**	102	109



Dimensions, forced ventilated motors

g500-H210

Dimensions with solid shaft and Flange

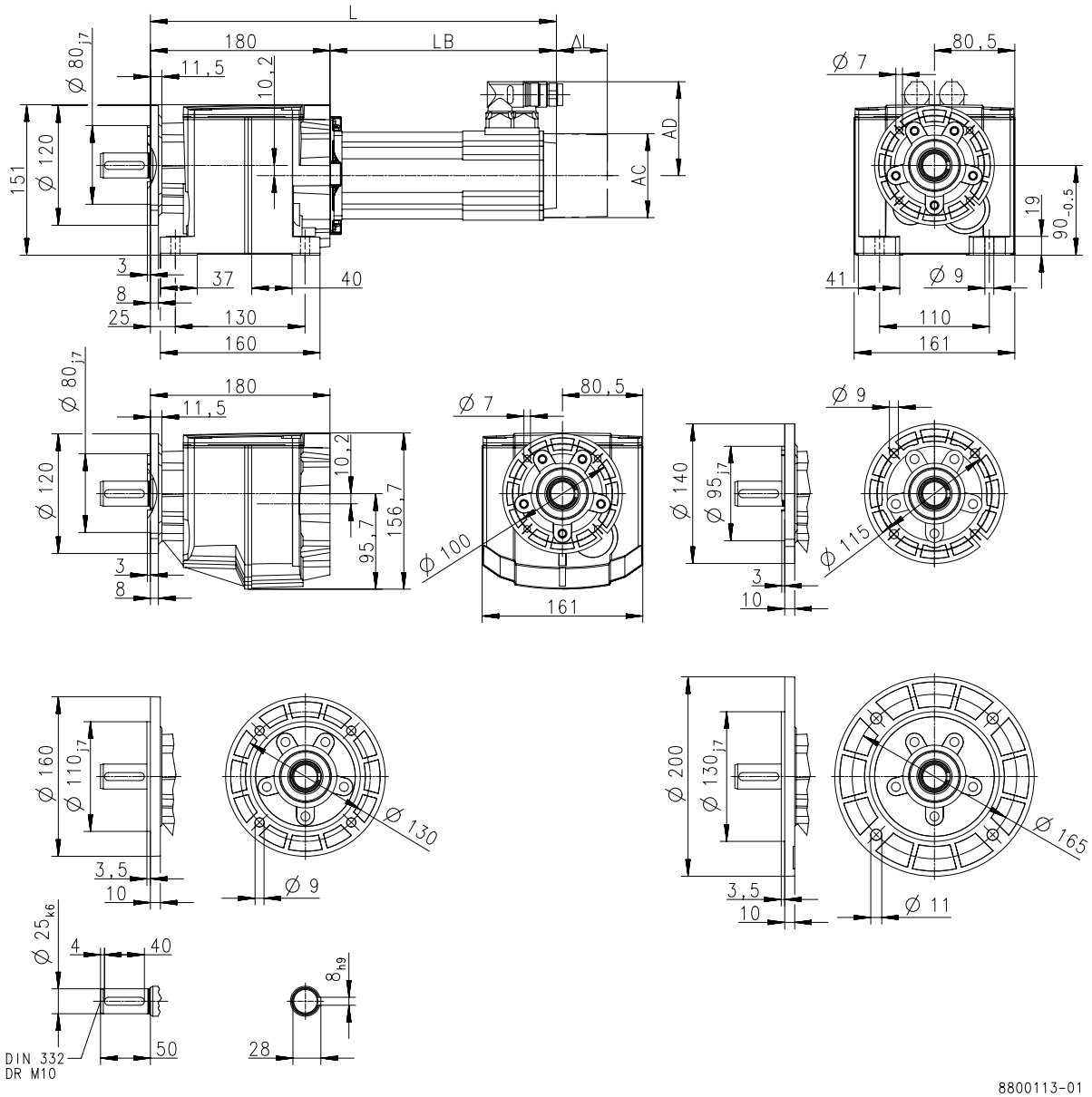

Produkt			MCA	
			13I34	14L16
Abmessungen				
Gesamtlänge	**L**	**[mm]**	516	560
Länge Motor	**LB**	**[mm]**	335.5	379.5
Länge Motoranbauten	**Δ L**	**[mm]**	89.5	88.5
Motordurchmesser	**AC**	**[mm]**	130	142
Abstand Motor/Anschluss	**AD**	**[mm]**	102	109



Dimensions, forced ventilated motors

g500-H320

Dimensions with solid shaft

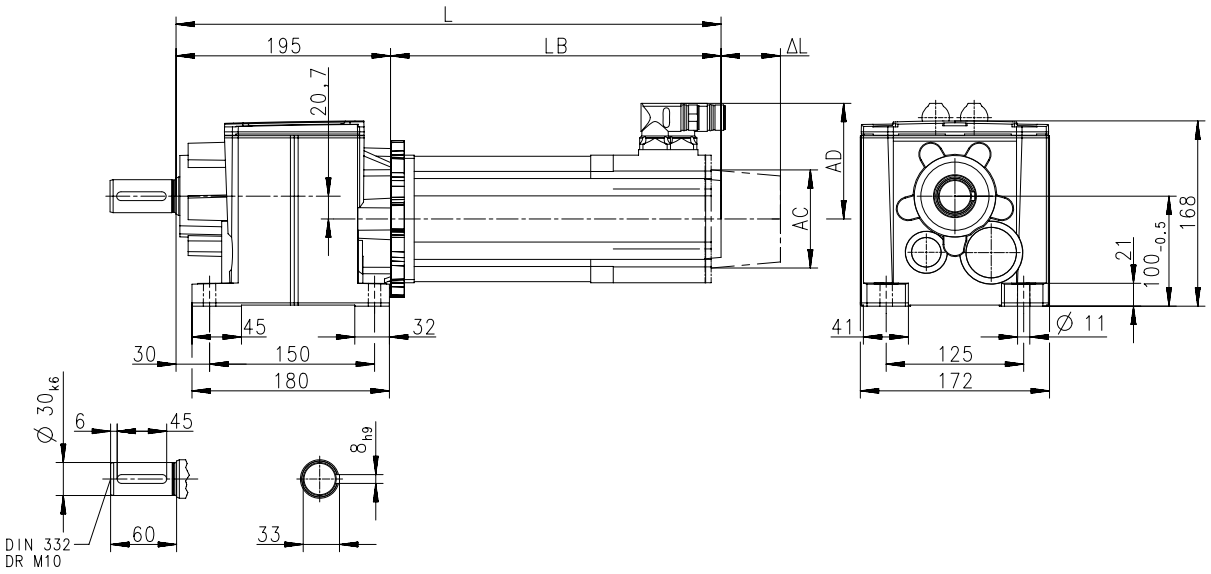

Produkt			MCA			
			13I34	14L16	14L35	17N17
Abmessungen						
Gesamtlänge	**L**	**[mm]**	536	580		643
Länge Motor	**LB**	**[mm]**	335.5	379.5		442.5
Länge Motoranbauten	**Δ L**	**[mm]**	89.5	88.5		89
Motordurchmesser	**AC**	**[mm]**	130	142		165
Abstand Motor/Anschluss	**AD**	**[mm]**	102	109		117.5



Dimensions, forced ventilated motors

g500-H320

Dimensions with solid shaft and centering

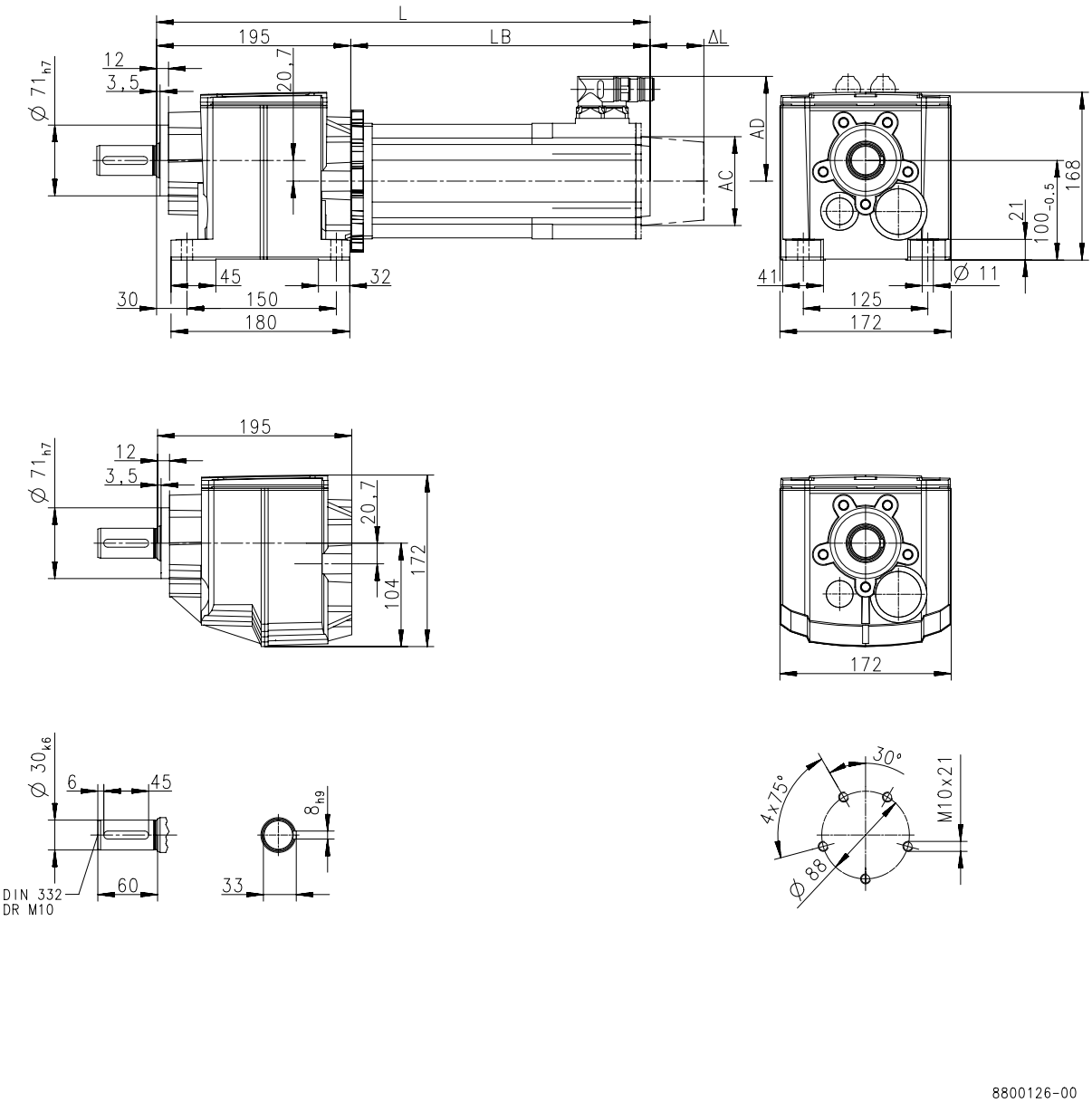

Produkt			MCA			
			13I34	14L16	14L35	17N17
Abmessungen						
Gesamtlänge	**L**	**[mm]**	536	580		643
Länge Motor	**LB**	**[mm]**	335.5	379.5		442.5
Länge Motoranbauten	**Δ L**	**[mm]**	89.5	88.5		89
Motordurchmesser	**AC**	**[mm]**	130	142		165
Abstand Motor/Anschluss	**AD**	**[mm]**	102	109		117.5



Dimensions, forced ventilated motors

g500-H320

Dimensions with solid shaft and Flange

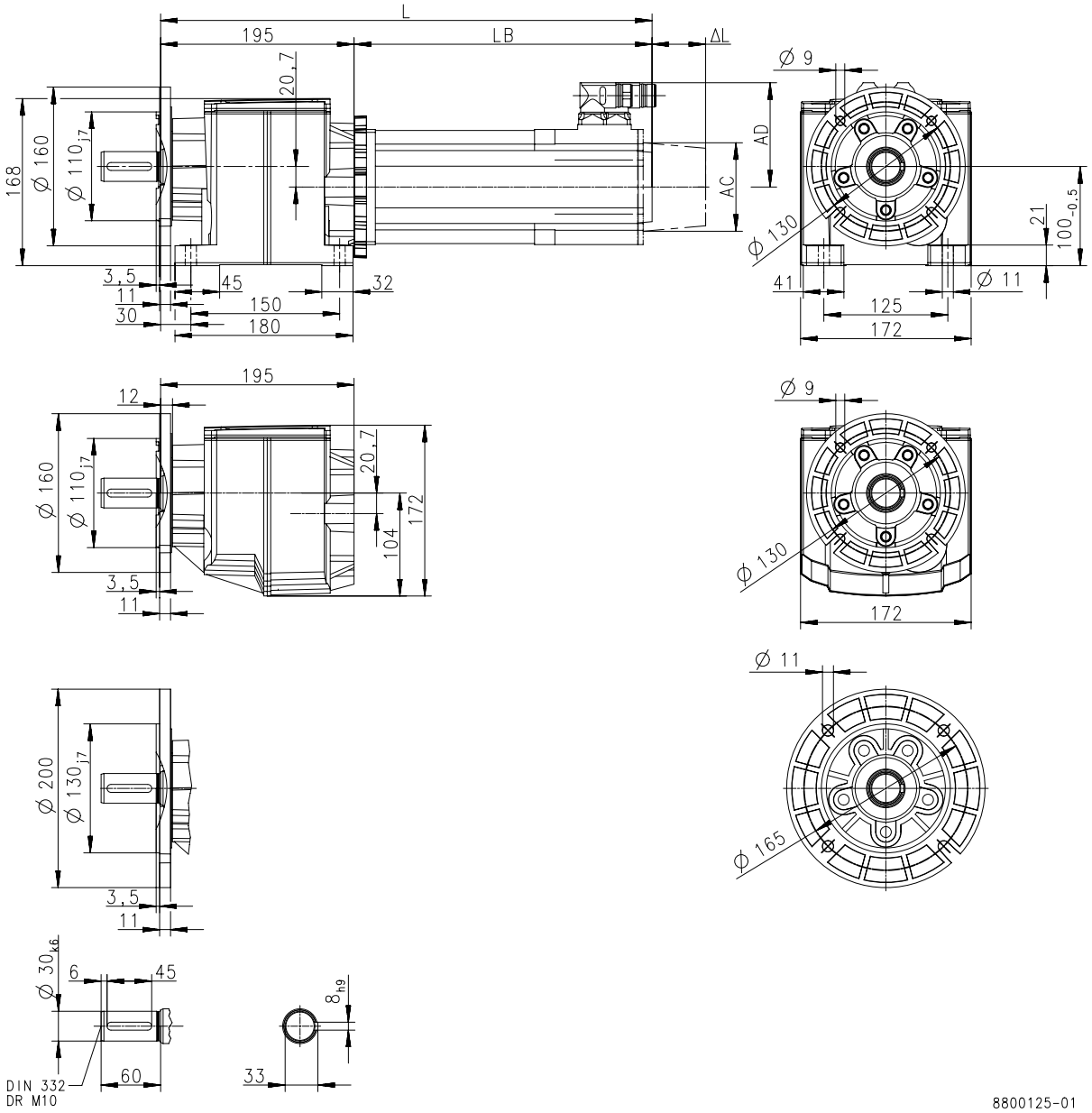

Produkt			MCA			
			13I34	14L16	14L35	17N17
Abmessungen						
Gesamtlänge	**L**	**[mm]**	536	580		643
Länge Motor	**LB**	**[mm]**	335.5	379.5		442.5
Länge Motoranbauten	**Δ L**	**[mm]**	89.5	88.5		89
Motordurchmesser	**AC**	**[mm]**	130	142		165
Abstand Motor/Anschluss	**AD**	**[mm]**	102	109		117.5



Dimensions, forced ventilated motors

g500-H450

Dimensions with solid shaft

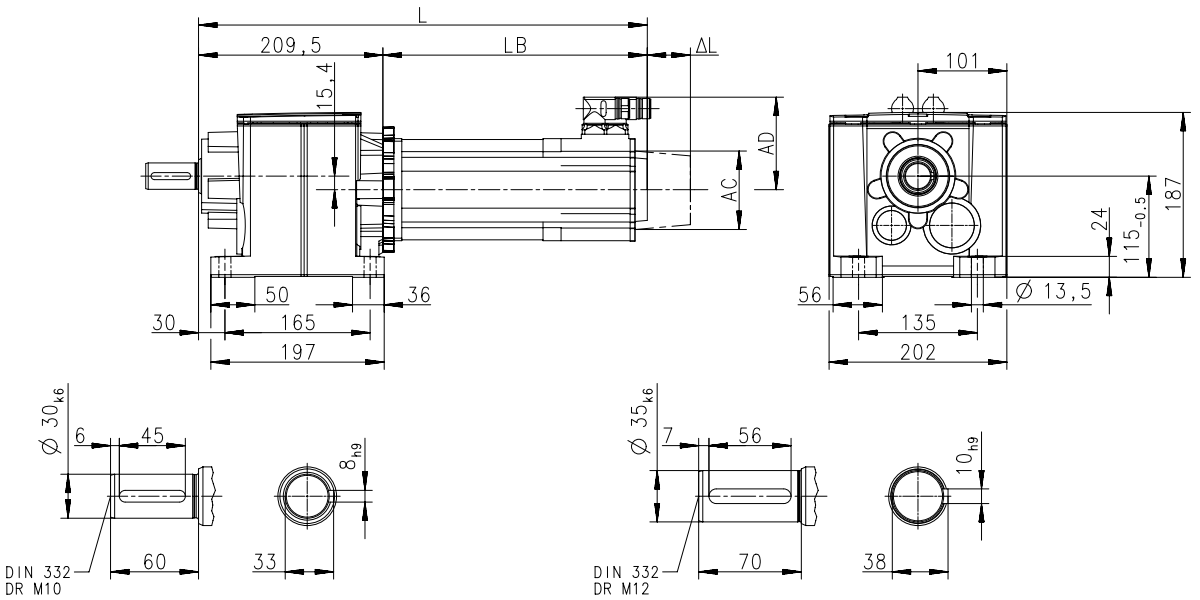

Produkt			MCA			
			13I34	14L16	14L35	17N17
Abmessungen						
Gesamtlänge	**L**	**[mm]**	545	589		652
Länge Motor	**LB**	**[mm]**	335.5	379.5		442.5
Länge Motoranbauten	**Δ L**	**[mm]**	89.5	88.5		89
Motordurchmesser	**AC**	**[mm]**	130	142		165
Abstand Motor/Anschluss	**AD**	**[mm]**	102	109		117.5



Dimensions, forced ventilated motors

g500-H450

Dimensions with solid shaft and centering

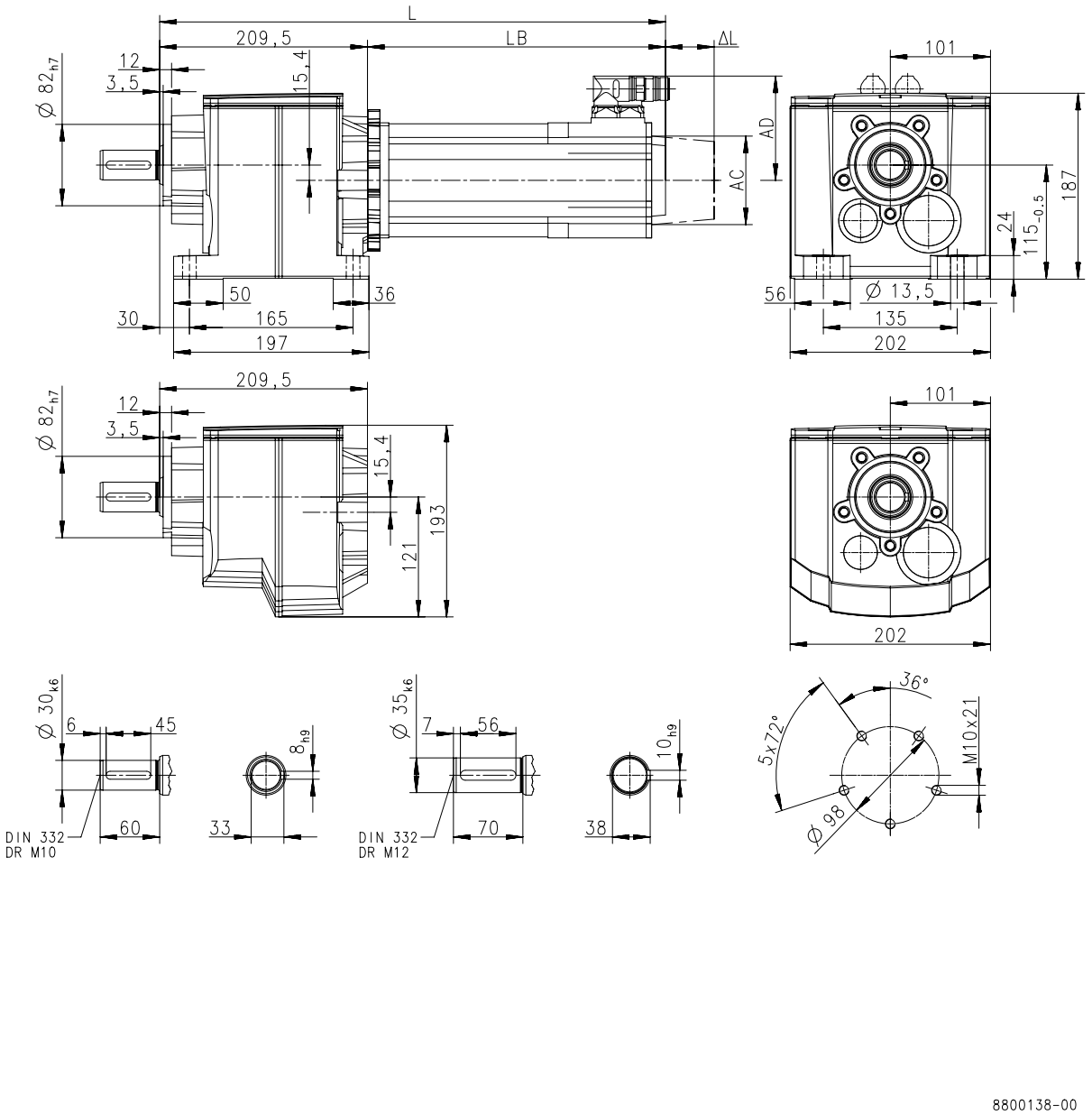

8800138-00

Produkt			MCA			
			13I34	14L16	14L35	17N17
Abmessungen						
Gesamtlänge	**L**	**[mm]**	545	589		652
Länge Motor	**LB**	**[mm]**	335.5	379.5		442.5
Länge Motoranbauten	**Δ L**	**[mm]**	89.5	88.5		89
Motordurchmesser	**AC**	**[mm]**	130	142		165
Abstand Motor/Anschluss	**AD**	**[mm]**	102	109		117.5



Dimensions, forced ventilated motors

g500-H450

Dimensions with solid shaft and Flange

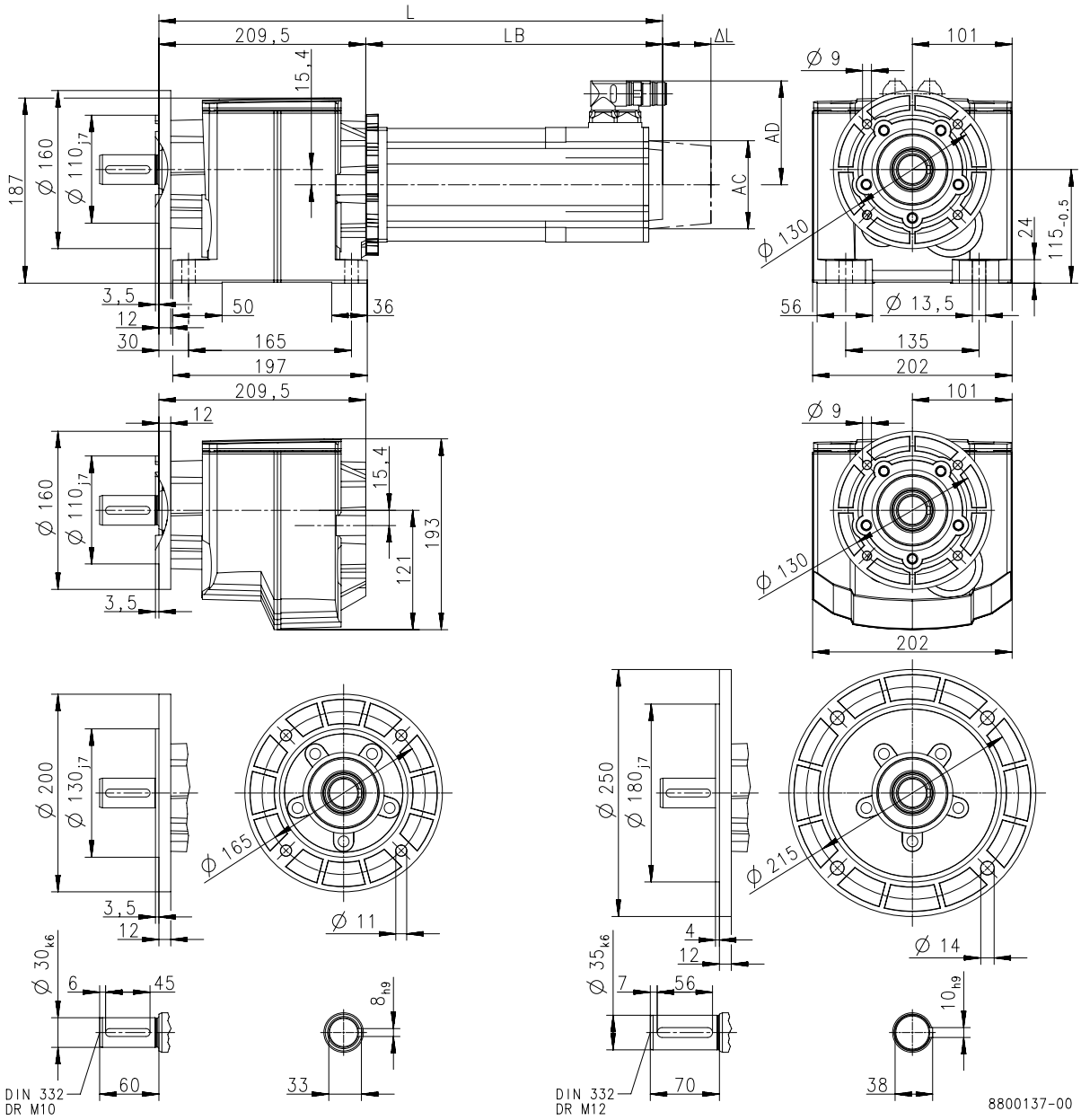

Produkt			MCA			
			13I34	14L16	14L35	17N17
Abmessungen						
Gesamtlänge	**L**	**[mm]**	545	589		652
Länge Motor	**LB**	**[mm]**	335.5	379.5		442.5
Länge Motoranbauten	**Δ L**	**[mm]**	89.5	88.5		89
Motordurchmesser	**AC**	**[mm]**	130	142		165
Abstand Motor/Anschluss	**AD**	**[mm]**	102	109		117.5



Weights, self-ventilated motors

2-stage gearboxes

				MCA			
				10I40	13I41	14L20	17N23
g500	-H100	m	[kg]	9.3	14		
	-H140	m	[kg]	10	15		
	-H210	m	[kg]	12	16	20	
	-H320	m	[kg]	14	18	22	30
	-H450	m	[kg]	17	21	26	33

3-stage gearboxes

				MCA	
				10I40	13I41
g500	-H210	m	[kg]	12	
	-H320	m	[kg]	14	
	-H450	m	[kg]	17	21



Weights, forced ventilated motors

2-stage gearboxes

				MCA			
				13I34	14L16	14L35	17N17
g500	-H100	m	[kg]	15			
	-H140	m	[kg]	16			
	-H210	m	[kg]	18	22		
	-H320	m	[kg]	19	24		33
	-H450	m	[kg]	22	27		36

3-stage gearboxes

				MCA
				13I34
g500	-H450	m	[kg]	23



Surface and corrosion protection

For optimum protection of geared motors against ambient conditions, the surface and corrosion protection system (OKS) offers tailor-made solutions.

Various surface coatings combined with other protective measures ensure that the geared motors operate reliably even at high air humidity, in outdoor installations or in the presence of atmospheric impurities. Any colour from the RAL Classic collection can be chosen for the top coat. The geared motors are also available unpainted (no surface and corrosion protection).

Surface and corrosion protection	Applications	Measures
OKS-G (primed)	• Dependent on subsequent top coat applied	• 2K PUR priming coat (grey) • Zinc-coated screws • Rust-free breather elements Optional measures • Stainless steel nameplate
OKS-S (small)	• Standard applications • Internal installation in heated buildings • Air humidity up to 90%	• Surface coating as per corrosivity category C1 (in line with EN 12944-2) • Zinc-coated screws • Rust-free breather elements Optional measures • Stainless steel nameplate
OKS-M (medium)	• Internal installation in non-heated buildings • Covered, protected external installation • Air humidity up to 95%	• Surface coating as per corrosivity category C2 (in line with EN 12944-2) • Zinc-coated screws • Rust-free breather elements Optional measures • Stainless steel shaft • Stainless steel nameplate • Rust-free shrink disc (on request)
OKS-L (large)	• External installation • Air humidity above 95% • Chemical industry plants • Food industry	• Surface coating as per corrosivity category C3 (in line with EN 12944-2) • Blower cover and B end shield additionally primed • Cable glands with gaskets • Corrosion-resistant brake with cover ring, stainless friction plate, and chrome-plated armature plate (on request) • All screws/screw plugs zinc-coated • Stainless breather elements • Threaded holes that are not used are closed by means of plastic plugs Optional measures • Sealed recesses on motor (on request) • Stainless steel shaft • Stainless steel nameplate • Rust-free shrink disc (on request) • Additional priming coat on cast iron fan • Oil expansion tank and torque plates painted separately and supplied loose



Surface and corrosion protection

Structure of surface coating

Surface and corrosion protection	Corrosivity category	Surface coating	Colour
	DIN EN ISO 12944-2	Structure	
Without OKS(uncoated)		Dipping primed gearbox	
OKS-G (primed)		Dipping primed gearbox 2K PUR priming coat	
OKS-S (small)	C1	Dipping primed gearbox 2K-PUR top coat	Standard: RAL 7012 Optional: RAL Classic
OKS-M (medium)	C2	Dipping primed gearbox 2K PUR priming coat 2K-PUR top coat	
OKS-L (large)	C3		





g500-H helical gearbox

45 to 450 Nm

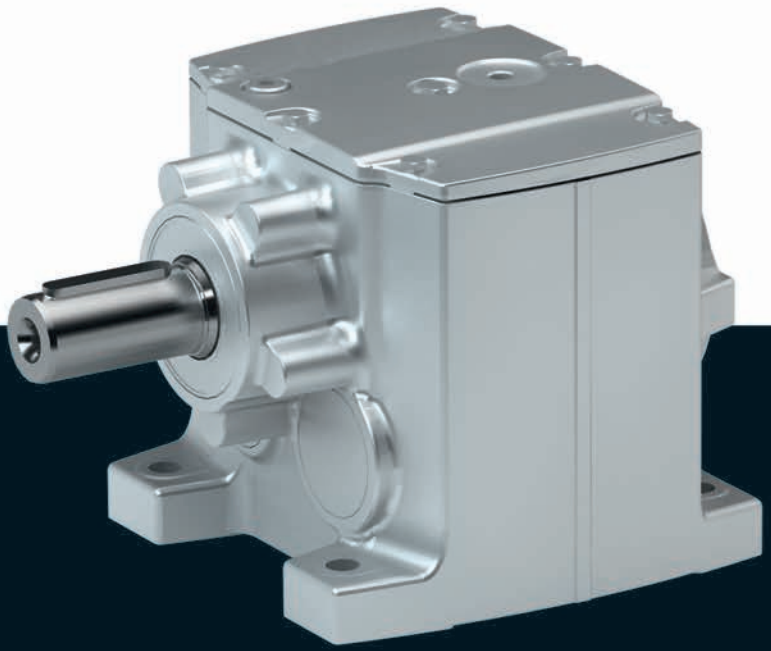

g500-H helical gearbox

Contents

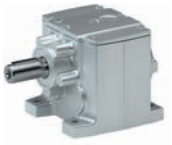

General information	List of abbreviations	6.3 - 5
	Product information	6.3 - 6
	Equipment	6.3 - 7
	The gearbox kit	6.3 - 8
	Functions and features	6.3 - 10
	Lubricants	6.3 - 11
	Ventilation	6.3 - 12
Technical data	Permissible radial and axial forces at output	6.3 - 15
	Moments of inertia	6.3 - 17
	Additional weights for gearboxes	6.3 - 20

Contents

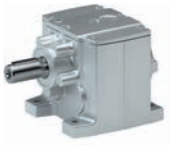

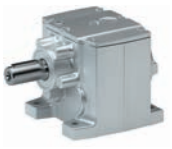

List of abbreviations

$F_{ax,max}$	[N]	Max. axial force
$F_{rad,max}$	[N]	Max. radial force
i		Ratio
J	[kgcm²]	Moment of inertia
m	[kg]	Mass

g500-H helical gearbox

General information

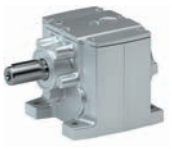

Product information

The robust helical gearboxes feature high permissible radial forces, closely stepped ratios and a low backlash. They are available in 2-pole and 3-pole design with a torque up to 450 Nm and a ratio of up to i= 370.

Versions

- Fine-scaling of size / torque provides for an optimum machine adaptation
- Standardised shaft and flange dimensions for an easy machine integration
- High efficiency

The product name

Gearbox type	Product range		Design	Rated torque [Nm]	Product
Helical gearbox	g500	-	H	45	g500-H45
				100	g500-H100
				140	g500-H140
				210	g500-H210
				320	g500-H320
				450	g500-H450

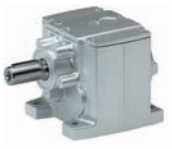

Equipment

Overview

The equipment includes all the options available as standard and all the built-on accessories of the product.

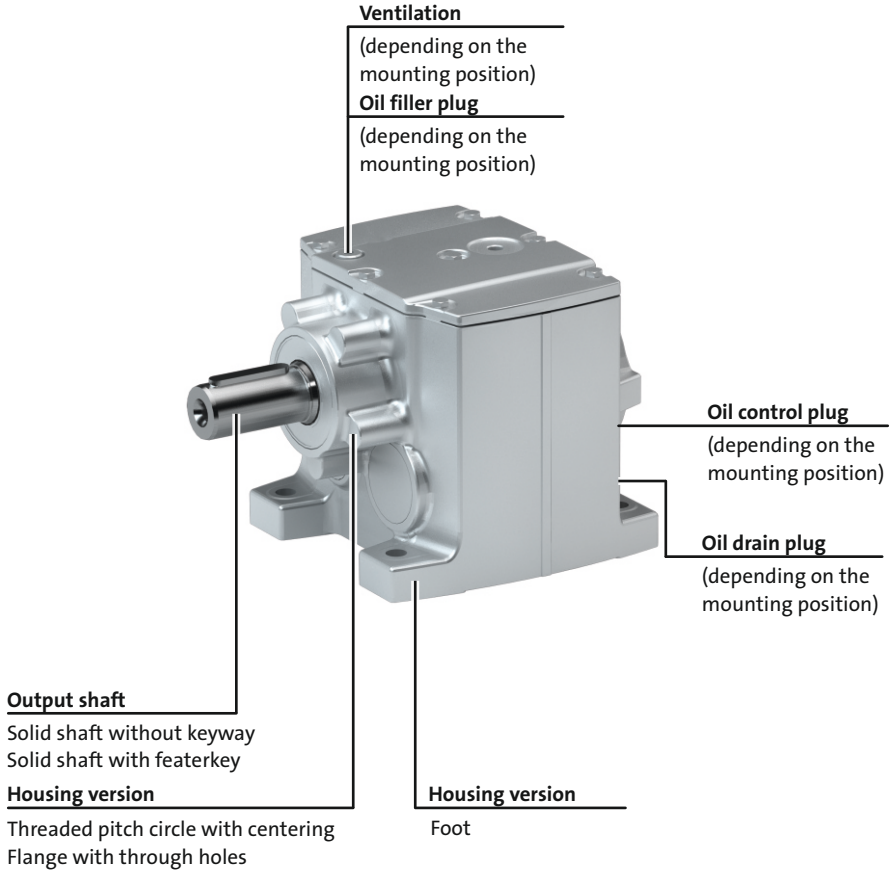

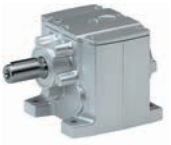

The gearbox kit

Gearbox details

Product	g500-H45	g500-H100	g500-H140	g500-H210	g500-H320	g500-H450
Driven shaft						
Solid shaft without keyway [mm]		20x40	25x50		30x60	35x70
Solid shaft with featherkey [mm]	14x28 20x40	20x40	25x50		30x60	30x60 35x70
Design	Standard stainless steel					
Gasket	Standard FPM (Viton)					
Bearing	Standard	Standard Reinforced				
Fitting grease	Not enclosed Enclosed					
Housing						
Housing version	With foot Without foot with centering	With foot With foot and centering Without foot with centering				
Output flange						
flange diameter [mm]	120/140/160			120/140/160/200	160/200	160/200/250
Lubricant						
Type	CLP 460 [1)] CLP HC 320 CLP HC 220 CLP HC 220 USDA H1					
Oil-level inspection	Without inspection With inspection					
Breather element	Without				Standard mounting position: Mounted Combined mounting position: loosely enclosed	
Backlash						
Backlash	Standard					

[1)] Not suitable for geared servo motors.

► Further information and installation feasibilities can be found in the Gearboxes chapter.

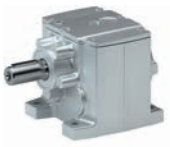

The gearbox kit

Gearbox details

Solid shaft		
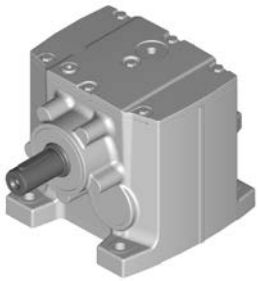 Foot mounting	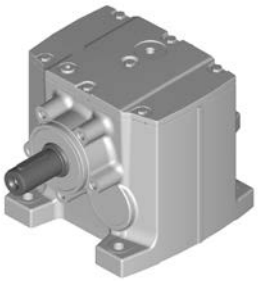 Foot mounting With centering	 Foot mounting Flange with through holes

Solid shaft	
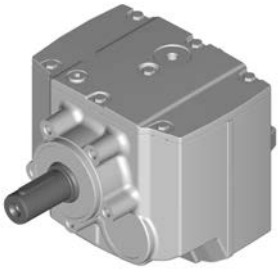 With centering	 Flange with through holes

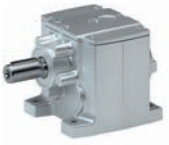

Functions and features

Product	g500-H45	g500-H100	g500-H140	g500-H210	g500-H320	g500-H450
Housing						
Design	Cuboid					
Material	Aluminium					
Solid shaft						
Design	with keyway to DIN 6885	with keyway to DIN 6885 Without keyway				
Tolerance	Shaft diameter ≤ 50 mm: k6 Shaft diameter > 50 mm: m6					
Material	Tempered steel C45 Nirosta X46Cr13					
Toothed parts						
Design	Ground tooth flanks Optimised tooth flank geometry					
Material	Case-hardened steel					
Shaft-hub joint						
	Force-fit					
Shaft sealing rings						
Design	With dust lip					
Material	NB / FP					
Bearing						
Design	Ball bearing / tapered-roller bearing depending on size and design					
Lubricants						
	Standard: mineral oil Optional: synthetic oil [1]					
Quantities	Corresponding to mounting position (see nameplate)					
Mechanical efficiency						
2-stage gearboxes [$\eta_{c=1}$]	0.96					
3-stage gearboxes [$\eta_{c=1}$]				0.95		

[1] Standard for geared servo motors.

Direction of rotation

2-stage gearboxes	3-stage gearboxes
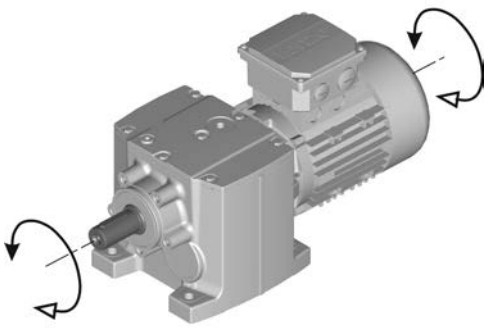	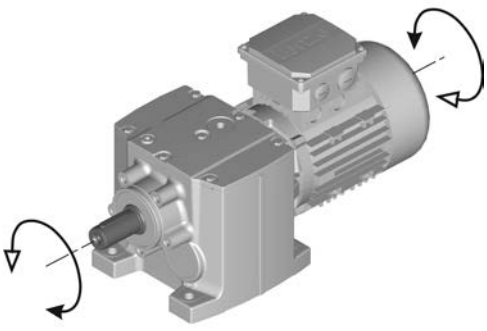



Lubricants

Lenze gearboxes and geared motors are ready for operation on delivery and are filled with lubricants specific to both the drive and the design. The mounting position and design specified in the order are key factors in choosing the volume of lubricant.

The lubricants listed in the lubricant table are approved for use in Lenze drives.

Lubricant table

Mode	CLP 460	CLP HC 320	CLP HC 220 USDA H1
Ambient temperature [°C]	0 ... +40	-25 ... +50	-20 ... +40
Specification	Mineral based oil with additives	Synthetic-based oil (synthetic hydrocarbon / poly-alpha-olefin oil)	
Changing interval	16000 operating hours not later than after three years (oil temperature 70 to 80 °C)	25000 operating hours not later than after three years (oil temperature 70 to 80 °C)	16000 operating hours not later than after three years (oil temperature 70 to 80 °C)
Fuchs	Fuchs Renolin CLP 460	Fuchs Renolin Unisyn CLP 320	bremer & leguil Cassida Fluid GL 220
Klüber	Klüberoil GEM1-460 N	Klübersynth GEM4-320 N	Klüberoil 4 UH1-220 N
Shell	Shell Omala S2 G 460	Shell Omala S4 GX HD 320	

► Please contact your Lenze sales office if you are operating at ambient temperatures in areas up to< -20 °C bzw. > or up to +40°C.

Shaft sealing rings

By default, the gearboxes come with NBR shaft sealing rings at the output end. At high speed and unfavourable ambient conditions as high temperature, reduced circulation of air etc., Lenze recommends the use of Viton shaft sealing rings.

Please consider this in your order.

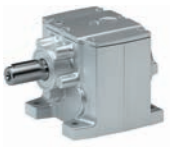

Ventilation

Non-ventilated gearboxes

No ventilation is required for gearboxes g500-H45 to H210.

Ventilated gearboxes

The g500-H320 H450 gearbox is supplied with a breather element as standard.

Gearboxes in combined mounting position

To reduce the number of different versions, the gearboxes can also be ordered with combined mounting positions.
Depending on the gearbox in question, the following combinations are available:
- g500-H45 in combined mounting position ABCDEF
- g500-H100 ... H450 in combined mounting position AEF

The breather elements are supplied loose.

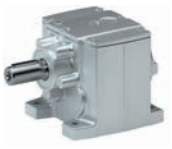

Ventilation

Position of ventilation, sealing elements and oil level check

► **A ... F** mounting position

A	B
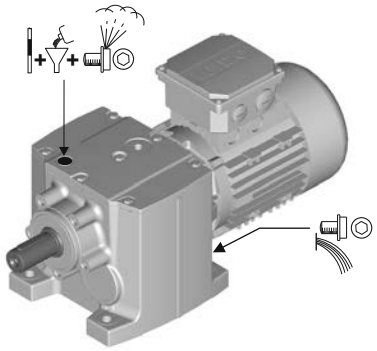	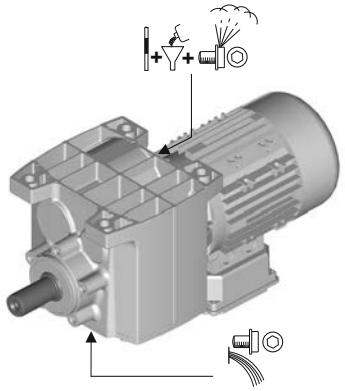
C	**D**
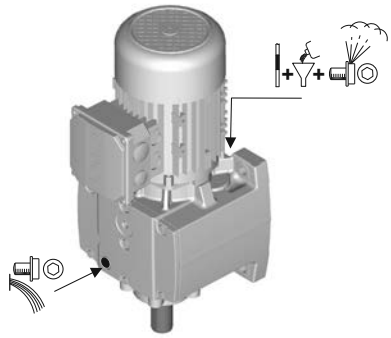	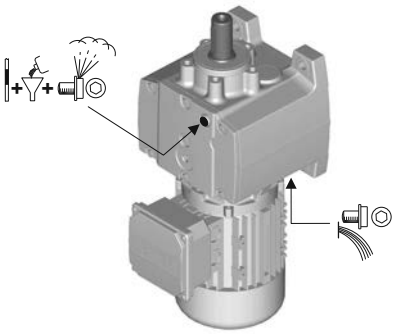
E	**F**
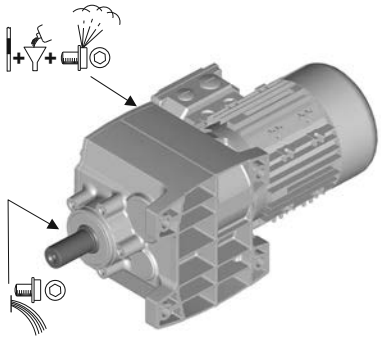	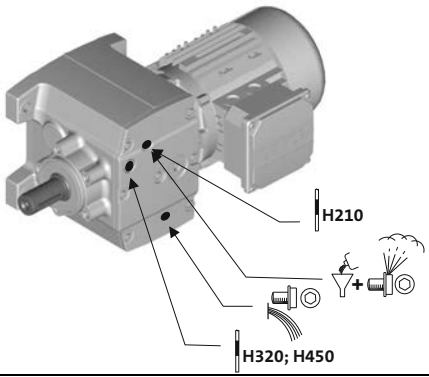

	Filling		Drain
	Ventilation		Check

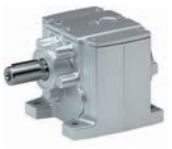

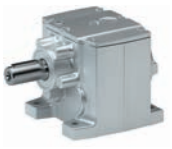

Permissible radial and axial forces at output

Permissible radial force

$F_{rad,perm} = f_w \times F_{rad,max}$

► If F_{rad} **and** $F_{ax} \neq 0$, please contact Lenze.

Permissible axial force

If there is no radial force, the maximum permissible axial force is 50 % of the table value $F_{rad,max}$

Application of forces

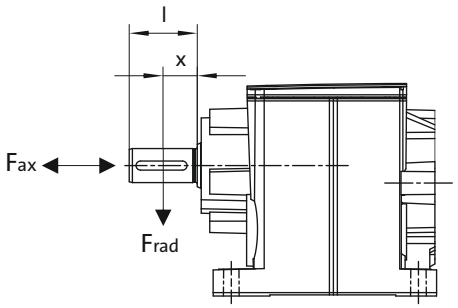

Additional load factor f_w at output shaft

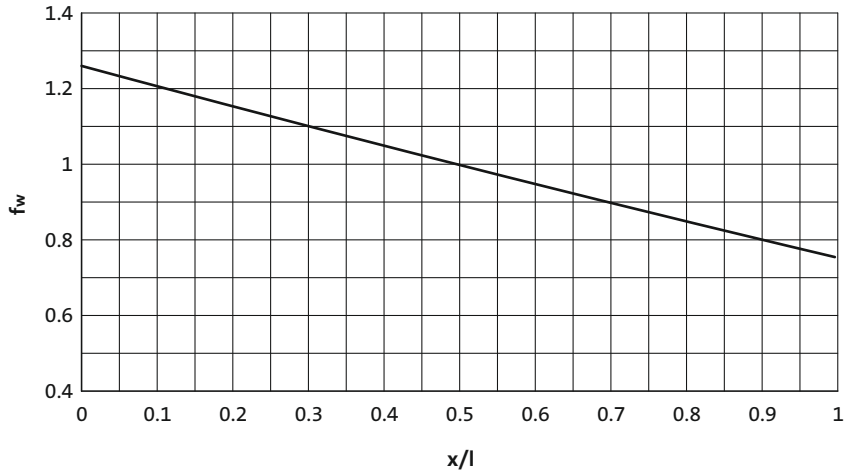

6.3

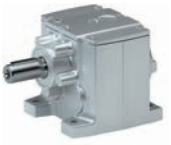

Permissible radial and axial forces at output

The values given in the table refer to the center shaft end force application point and are minimum values calculated according to the most unfavourable conditions (force application angle, mounting position, direction of rotation). The values were calculated for the motor/gearbox combination with a load capacity of c= 1.3 and an input speed of 1400 rpm.

► If the torque is transmitted via the flange face, max 50 % of the radial force $F_{rad,max}$ are permissible.

In case of different operating conditions, considerably higher forces can be transmitted. Please contact Lenze.

Product	n_2 [r/min]									
	1000	630	400	250	160	100	63	40	25	≤16

	Max. radial force, Solid shaft									
	$F_{rad,max}$	$F_{rad,max}$	$F_{rad,max}$	$F_{rad,max}$	$F_{rad,max}$	$F_{rad,max}$	$F_{rad,max}$	$F_{rad,max}$	$F_{rad,max}$	$F_{rad,max}$
	[N]	[N]	[N]	[N]	[N]	[N]	[N]	[N]	[N]	[N]
g500-H45	300	370	630	710	800	920	1100	1400	1500	1500
g500-H100	820	1000	1200	1450	1750	2120	2560	2650	2650	2650
g500-H140	1210	1750	2000	2300	2700	3300	3800	3800	3800	3800
g500-H210	1150	1600	2020	2390	2780	3360	3900	3900	4360	4800
g500-H320	1500	1900	2200	2600	3000	3500	4100	4800	5600	5700
g500-H450	1900	2200	2560	3000	3470	4050	4720	5480	6610	7100

	Max. radial force, Solid shaft (reinforced bearings))									
	$F_{rad,max}$	$F_{rad,max}$	$F_{rad,max}$	$F_{rad,max}$	$F_{rad,max}$	$F_{rad,max}$	$F_{rad,max}$	$F_{rad,max}$	$F_{rad,max}$	$F_{rad,max}$
	[N]	[N]	[N]	[N]	[N]	[N]	[N]	[N]	[N]	[N]
g500-H100	1020	1250	1500	1810	2190	2650	3200	3300	3300	3300
g500-H140	1510	2180	2500	2870	3370	4120	4750	4750	4750	4750
g500-H210	1430	2000	2520	2980	3470	4200	4870	4870	5450	6000
g500-H320	1870	2370	2750	3250	3750	4370	5120	6000	7000	7100
g500-H450	2370	2750	3200	3750	4330	5060	5900	6850	8260	8870

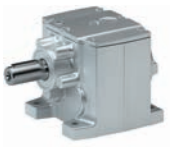

Moments of inertia

- The moments of inertia relate to the drive shaft of the gearbox.
- The total moment of inertia is calculated by adding the values of the gearbox, motor and accessories.

2-stage gearboxes

Product	Ratio	Moment of inertia
	i	J
		[kgcm²]
g500-H45	2.597	0.26
	3.413	0.17
	4.368	0.12
	5.312	0.18
	5.965	0.17
	6.982	0.12
	7.840	0.12
	8.935	0.089
	10.033	0.086
	11.429	0.059
	12.833	0.057
	14.836	0.041
	16.660	0.040
	19.013	0.028
	21.350	0.027
	24.595	0.019
	27.618	0.019
	32.000	0.012
	35.933	0.012
	41.455	0.008
	46.550	0.008
	52.909	0.005
	59.413	0.005
g500-H100	3.354	0.53
	4.600	0.34
	5.167	0.43
	5.887	0.24
	6.440	0.21
	7.086	0.28
	8.214	0.15
	9.068	0.20
	10.063	0.11
	11.360	0.17
	12.653	0.13
	14.490	0.13
	15.500	0.10
	17.750	0.10
	19.486	0.069
	22.314	0.067
	25.095	0.048
	28.738	0.047
	31.805	0.032
	36.422	0.031
	39.857	0.022
	45.643	0.022
	52.510	0.014
	60.133	0.013

Product	Ratio	Moment of inertia
	i	J
		[kgcm²]
g500-H140	3.267	0.90
	4.480	0.54
	5.733	0.36
	6.272	0.31
	7.269	0.51
	8.000	0.21
	9.029	0.34
	9.800	0.15
	11.554	0.24
	12.640	0.21
	13.957	0.20
	16.122	0.15
	17.802	0.14
	19.750	0.11
	21.808	0.11
	24.829	0.077
	27.415	0.074
	31.976	0.053
	35.308	0.051
	40.526	0.035
	44.748	0.034
	50.786	0.024
	56.077	0.024
	66.908	0.015
	73.879	0.014
g500-H210	3.389	1.53
	4.648	0.98
	5.583	1.24
	6.250	1.18
	7.657	0.82
	8.571	0.79
	9.799	0.59
	10.720	0.51
	12.000	0.50
	13.673	0.38
	15.306	0.36
	16.750	0.29
	18.750	0.28
	21.802	0.18
	24.405	0.18
	27.119	0.13
	30.357	0.13
	35.095	0.085
	39.286	0.083
	42.593	0.062
	47.679	0.061
	54.438	0.040
	60.938	0.039

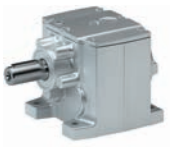

Moments of inertia

2-stage gearboxes

Product	Ratio	Moment of inertia
	i	J
		[kgcm²]
g500-H320	3.389	1.23
	4.648	0.81
	6.083	1.66
	6.910	1.51
	8.343	1.04
	9.477	0.97
	10.677	0.72
	11.680	0.63
	12.128	0.68
	13.268	0.59
	14.898	0.44
	16.923	0.42
	18.250	0.34
	20.731	0.32
	23.754	0.21
	26.983	0.20
	29.548	0.15
	33.564	0.15
	38.238	0.095
	43.436	0.092
	46.407	0.070
	52.715	0.067

Product	Ratio	Moment of inertia
	i	J
		[kgcm²]
g500-H450	3.444	4.94
	4.724	3.21
	5.678	3.64
	6.045	2.23
	6.613	1.98
	7.787	2.52
	8.800	2.40
	9.965	1.81
	11.262	1.74
	12.320	1.56
	13.905	1.21
	15.714	1.17
	17.033	0.95
	19.250	0.93
	22.170	0.53
	25.056	0.51
	27.578	0.39
	31.167	0.38
	35.689	0.24
	40.333	0.24
	43.313	0.18
	48.950	0.17
	54.750	0.12
	61.875	0.11

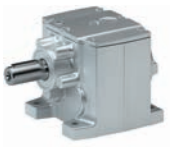

Moments of inertia

3-stage gearboxes

Product	Ratio	Moment of inertia
	i	J
		[kgcm²]
g500-H210	43.390	0.13
	48.571	0.13
	55.529	0.088
	62.160	0.088
	71.026	0.060
	79.507	0.059
	92.205	0.042
	103.214	0.042
	118.162	0.029
	132.270	0.029
	152.853	0.020
	198.873	0.014
	222.619	0.013
	257.631	0.003
	288.393	0.003
	368.080	0.006
g500-H320	47.276	0.13
	53.703	0.13
	60.502	0.093
	68.726	0.091
	77.387	0.062
	87.906	0.061
	100.462	0.044
	114.118	0.043
	128.743	0.030
	146.244	0.030
	166.541	0.021
	216.683	0.014
	246.137	0.014
	280.702	0.003
	318.859	0.003

Product	Ratio	Moment of inertia
	i	J
		[kgcm²]
g500-H450	44.124	0.36
	49.867	0.36
	56.469	0.25
	61.774	0.22
	69.813	0.22
	78.794	0.16
	89.048	0.15
	96.522	0.12
	109.083	0.12
	121.342	0.079
	137.133	0.078
	156.274	0.054
	176.611	0.054
	198.059	0.036
	223.833	0.035
	248.200	0.025
	280.500	0.025
	326.994	0.015
	369.548	0.015

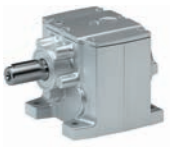

Additional weights for gearboxes

Product			g500-H45	g500-H100	g500-H140	g500-H210	g500-H320	g500-H450
Mass								
Foot	m	[kg]	0.1	0.1	0.2	0.1	0.1	0.2
Flange	m	[kg]	0.3	0.4	0.6	0.6	0.8	0.9

g500-S shaft-mounted helical geared motors

10 ... 610 Nm (asynchronous servo motors)

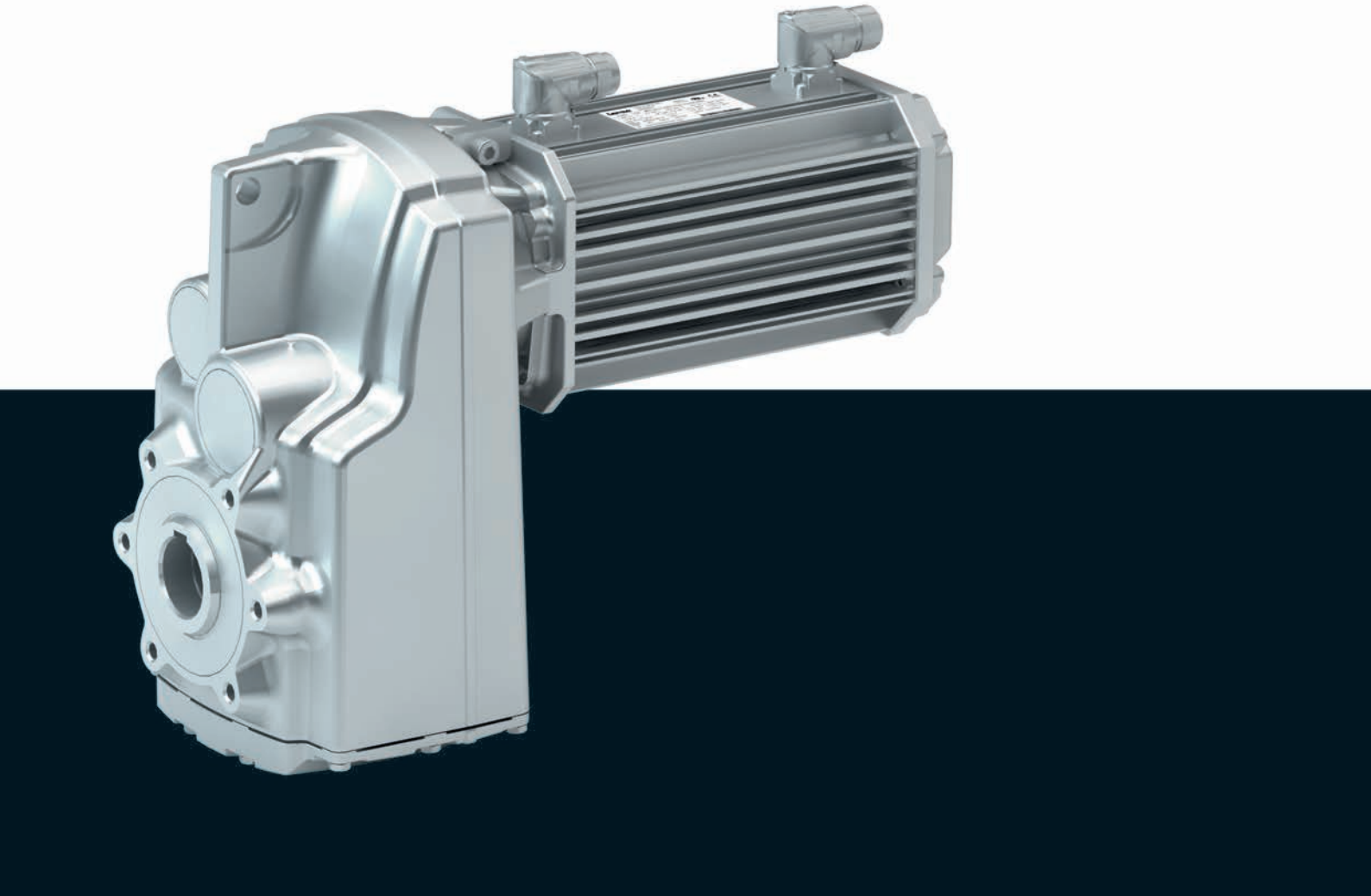

g500-S shaft-mounted helical geared motors

Contents



General information	List of abbreviations	6.5 - 5
	Product information	6.5 - 6
	Equipment	6.5 - 7
	The gearbox kit	6.5 - 8
	Dimensioning	6.5 - 14
Technical data	Selection tables, notes	6.5 - 19
	Selection tables	6.5 - 20
	Dimensions, notes	6.5 - 28
	Dimensions, self-ventilated motors	6.5 - 29
	Dimensions, forced ventilated motors	6.5 - 45
	Weights, self-ventilated motors	6.5 - 61
	Weights, forced ventilated motors	6.5 - 62
	Surface and corrosion protection	6.5 - 63

Contents





List of abbreviations

c		Load capacity
i		Ratio
J	[kgcm²]	Moment of inertia
m	[kg]	Mass
M_2	[Nm]	Output torque
$M_{2, max}$	[Nm]	Max. output torque
$n_{2, eto}$	[r/min]	Transition speed
$n_{2, th}$	[r/min]	Thermal limit speed

CCC	China Compulsory Certificate
CE	Communauté Européenne
CSA	Canadian Standards Association
cURus	Combined certification marks of UL for the USA and Canada
DIN	Deutsches Institut für Normung e.V.
EMC	Electromagnetic compatibility
EN	European standard
GOST	Certificate for Russian Federation
IEC	International Electrotechnical Commission
IM	International Mounting Code
IP	International Protection Code
NEMA	National Electrical Manufacturers Association
UL	Underwriters Laboratory Listed Product
UR	Underwriters Laboratory Recognized Product
VDE	Verband deutscher Elektrotechniker (Association of German Electrical Engineers)



Product information

In combination with servo motors, our shaft-mounted helical gearboxes form a compact and powerful drive unit. Numerous options at the input and output end provide for the drive to be exactly adapted to your application.

The slim shaft-mounted helical gearboxes feature high reliable radial forces, closely stepped gear reductions and a low backlash. They are available in 2-pole and 3-pole design with a torque up to 660 Nm and a ratio of up to i= 495.

Versions

- Slimline design saves installation space of the machine
- Solid shaft, hollow shaft and shrink disc for direct integration into the machine
- High accuracy with axial output provide for the highest efficiency
- With MCA asynchronous servo motors, rated torque: 2 Nm ... 61.4 Nm

The product name

Gearbox type	Product range		Design	Rated torque [Nm]	Product
Shaft-mounted helical gearbox	g500	-	S	130	g500-S130
				220	g500-S220
				400	g500-S400
				660	g500-S660



Equipment

Overview

The equipment includes all the options available as standard and all the built-on accessories of the product.

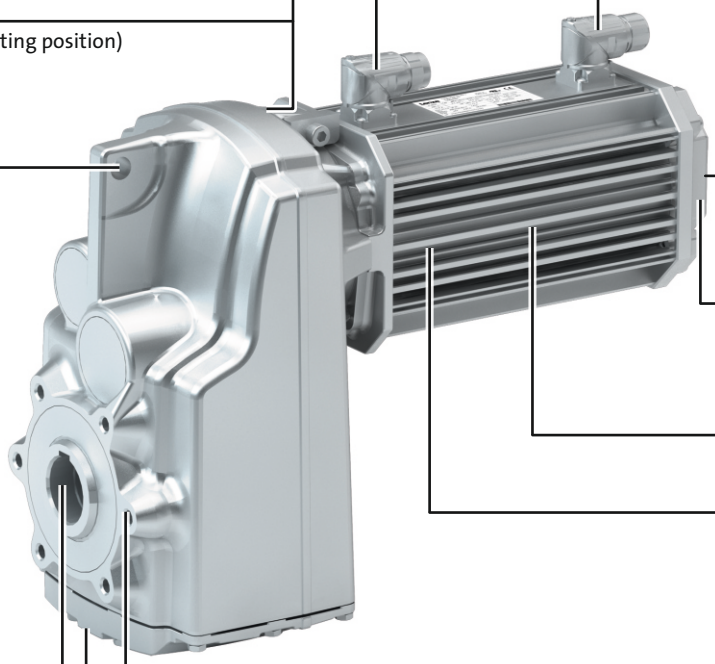

Ventilation
(depending on the mounting position)

Oil filler plug
(depending on the mounting position)

Oil control plug
(depending on the mounting position)

Torque plate
Rubber buffers

Output shaft
Hollow shaft without keyway
Solid shaft with featerkey
Hollow shaft with shrink disc

Oil drain plug
(depending on the mounting position)

Housing design
Threaded pitch circle with centering
Flange with through holes
Foot

Motor connection
Connector
Terminal box

Cooling
self-ventilated
forced ventilated

Feedback
Resolver
Incremental encoder
Absolute value encoder

Temperature monitoring
KTY

Permanent magnet brake



The gearbox kit

Geared motor

Product	g500-S130	g500-S220	g500-S400	g500-S660
Motor type	Asynchronous servo motor			
Servo motor				
2.0 Nm	MCA10			
4.0 - 6.3 Nm	MCA13			
5.4 - 12 Nm		MCA14		
9.5 - 21 Nm			MCA17	
Technical data				
Output torque	See selection table			
Output speed	See selection table			
Ratio	See selection table			
Load capacity	See selection table			
Moment of inertia	See selection table			
Mounting position				
Standard	A/B/C/D/E/F			
Combined	AEF			
Colour	Not coated Primed Paint in various corrosion-protection designs in accordance with RAL colours			
Surface and corrosion protection	Without OKS(uncoated) OKS-G (primed) OKS-S (small) OKS-M (medium) OKS-L (large)			



The gearbox kit

Mounting positions

► Mounting position (A to F) and position of system blocks (1 to 6)

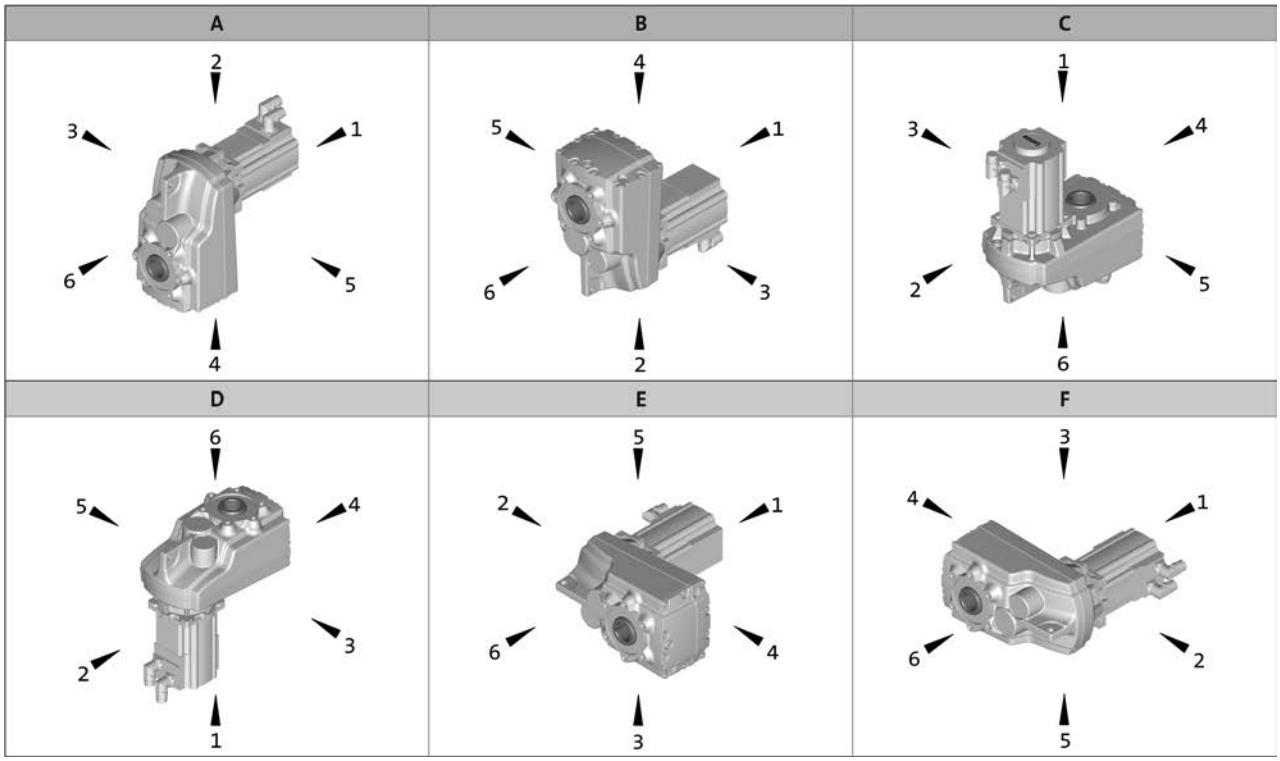

Hollow shaft: 0
Solid shaft: 6
Hollow shaft with shrink disc: 1, 6

Without foot: 0
Foot: 3, 4
Connector / terminal box: 2, 3, 4, 5



The gearbox kit

Motor details

Product	MCA					
	10I40	13I34 13I41	14L16 14L20 14L35 14L41	17N17 17N23 17N35 17N41	19S17 19S23 19S35 19S42	21X17 21X25 21X35 21X42
Connection type	Plug connectors Terminal box					
Permanent magnet holding brake						
Rated torque [Nm]	3.3	12	15	24	46	88
Brake voltage [V]	DC 24 AC 230					
Feedback	With absolute value encoder With incremental encoder With resolver					
Cooling	Self-ventilated	Self-ventilated Forced-ventilated				
Temperature monitoring	KTY83-110 thermal detector					
Approval	cURus GOST_R UkrSepro					
Degree of protection	IP54 IP65					

► Further information and installation feasibilities can be found in the Motors chapter.



The gearbox kit

Motor details

Connection type



Plug connectors



Terminal box

Cooling: self-ventilated



With resolver



With permanent magnet brake



With feedback
With feedback and permanent magnet brake

Cooling: forced ventilated



With resolver



With permanent magnet brake

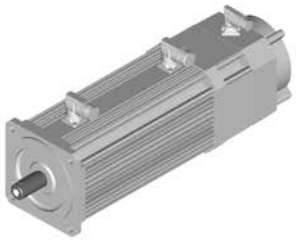

With feedback
With feedback and permanent magnet brake



The gearbox kit

Gearbox details

Product	g500-S130	g500-S220	g500-S400	g500-S660
Driven shaft				
Solid shaft with featherkey [mm]	25x50		30x60	35x70 40x80
Hollow shaft with keyway [mm]	25	25/30	30/35	40/45
Hollow shaft with shrink disc [mm]	25	25/30	35	40
Design	Standard stainless steel			
Gasket	Standard FPM (Viton)			
Bearing	Standard			
Fitting grease	Not enclosed Enclosed			
Housing				
Housing version	With foot without centring With centering			
Output flange				
flange diameter [mm]	160		200	200/250 [1]
Lubricant				
Type	CLP 460 [2] CLP HC 320 CLP HC 220 CLP HC 220 USDA H1			
Oil-level inspection	Without inspection With inspection			
Breather element	Without		Standard mounting position: Mounted Combined mounting position: loosely enclosed	
Backlash				
Backlash	Standard			
Accessories				
Torque plate	Rubber buffers			
Shaft cover	Shrink disc: Rotating cover Shrink disc: Fixed cover			

[1] 200 mm flange diameter only possible on hollow shaft version.
[2] Not suitable for geared servo motors.

6.5

► Further information and installation feasibilities can be found in the Gearboxes chapter.



The gearbox kit

Gearbox details

Solid shaft

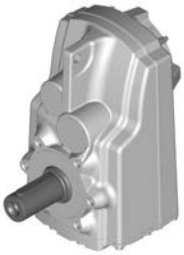
without centring

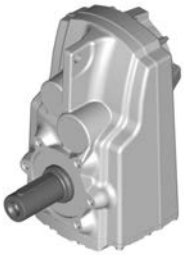
With centering


Flange with through holes

Hollow shaft


without centring


With centering


Flange with through holes

Hollow shaft with shrink disc


without centring


With centering


Flange with through holes

Accessories


Foot mounting


With rubber buffer

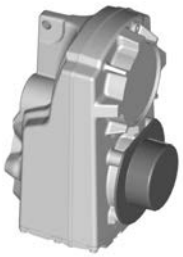
Shrink disc cover

6.5



Dimensioning

General information about the data provided in this catalogue

The powers, torques and speeds specified in this catalogue are rounded values and are valid under the following conditions:

- Operating time/day = 8 h (100% OT)
- Duty class I for up to 10 switching operations/h
- Mounting positions and designs in this catalogue
- Standard lubricant
- T_{amb} = 20 °C for gearboxes,
  T_{amb} = 40 °C for motors (in accordance with EN 60034)
- Site altitude < = 1000 m amsl
- The selection tables provide the permissible mechanical powers and torques. For notes on the thermal power limit, see chapter drive dimensioning.
- The rated power specified for motors and geared motors applies to operating mode S1 (in accordance with EN 60034).

Under different operating conditions, the values obtained may vary from those listed here.
In the case of extreme operating conditions, please consult your Lenze sales office.



Dimensioning

Thermal power limit

The thermal power limit, defined by the heat balance, limits the permissible gearbox continuous power. It may be less than the mechanical power ratings listed in the selection tables.

The thermal power limit is affected by:
- the churning losses in the lubricant. These are determined by the mounting position and the circumferential speed of the gears;
- the load and the speed
- the ambient conditions: temperature, air circulation, input or dissipation via shafts and the foundation

If the following input speeds n_1 are exceeded, please contact Lenze:

Motor frame size	Mounting position A, B, E, F	Mounting position C, D
MCA10 ... 14	4000 r/min	3000 r/min
MCA17	3000 r/min	1500 r/min

► For a short period of time up to 5 min, 30 % higher speeds are permissible

Possible ways of extending the application area

- shaft sealing rings made from FP material/Viton (option)
- reduction in lubricant quantity
- cooling of the geared motor by means of air convection on the machine/system



Dimensioning

Load capacity and application factor

Load capacity c of gearbox
Rated value for the load capacity of Lenze geared motors.
- c is the ratio of the permissible rated torque of the gearbox to the rated torque supplied by the drive component (e.g. the built-in Lenze motor).
- The value of c must always be greater than the value of the application factor k calculated for the application.

Application factor k (according to DIN 3990)
Takes into account the influence of temporally variable loads which are actually present during the anticipated operating time of gearboxes and geared motors.
k is determined by:
- the type of load
- the load intensity
- temporal influences

Duty class	Load type
I	Smooth operation, small or light jolts
II	Uneven operation, average jolts
III	Uneven operation, severe jolts and/or alternating load

Application factor k

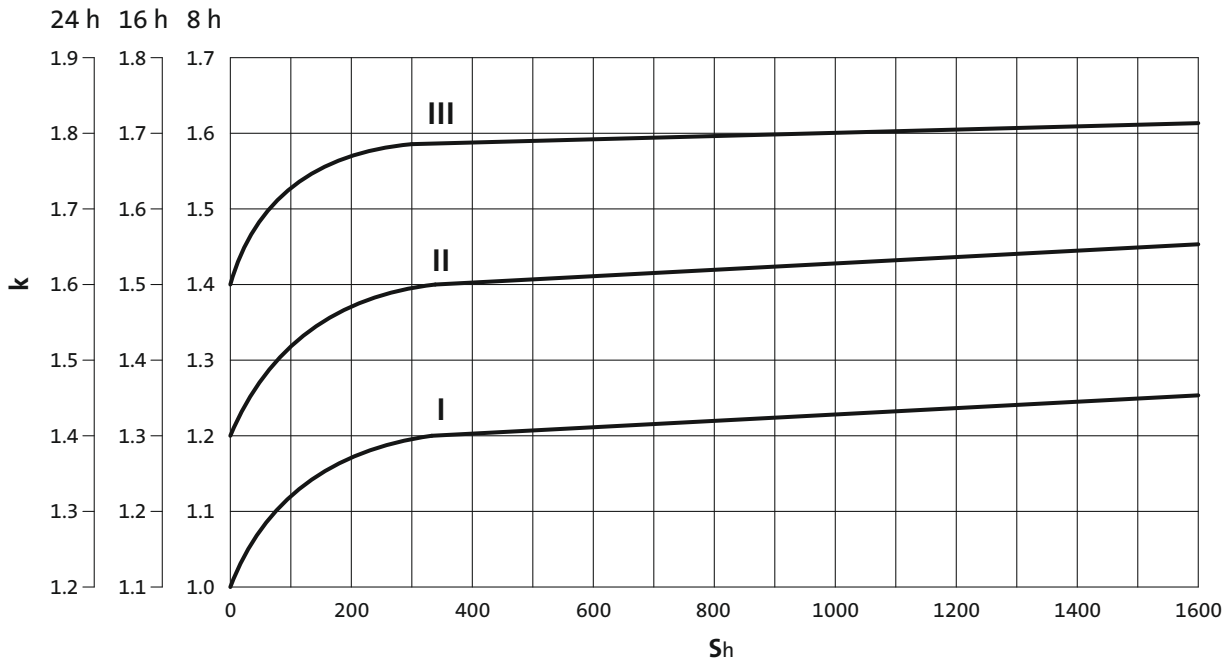

► S_h= switchings/h



Dimensioning

Weights

The values given in the tables consider the following gearbox/motor combination:
- Gearbox with solid shaft including lubricant amount
- Motor with feedback

For versions deviating from this, additional weights have to be considered.

The respective values can be found for:
- Geared motors with feedback
  > Chapter: Geared motors/Technical data
- Motor options: Brake
  > Chapter: Motors/Accessories

Moments of inertia

The given moments of inertia of the gearbox refer to the drive shaft. The influence of the ratio (i^2) has been considered in the data.

When the total moment of inertia of the geared motor is calculated, the values of the geared motors and the brake have to be added.

The respective values can be found for:
- Geared motors with feedback
  > Chapter: Geared motors/Technical data/Selection tables
- Motor options: Brake
  > Chapter: Motors/Accessories





Selection tables, notes

Notes on the selection tables

The selection tables show the available combinations of gearbox type, number of stages, ratio and motor. They are used only to provide basic orientation.
The following legend indicates the structure of the selection tables.

Number of the gear stage of the gearbox

2-stage gearboxes

Inverter operation						i	Product		Cooling	
$M_{2,max}$ [Nm]	$n_{2,th}$ [r/min]	M_2 [Nm]	$n_{2,eto}$ [r/min]	c	J [kgcm²]		g500	MCS		
95	747	15	747	3.7	2.400	5.021	-S130	09F38	Selbst	31
109	630	14	630	4.4	1.700	6.425	-S130	09D41	Selbst	31
109	630	24	630	2.6	2.500	6.425	-S130	09H41	Selbst	31
109	630	28	630	2.2	3.400	6.425	-S130	09L41	Selbst	31

For operating mode S1
Torque **M_2** and
thermal output speed **$n_{2,th}$**

For operating mode S2,S3 und S6
Max. permissible acceleration torque of geared motor **$M_{2,max}$** and
output speed **$n_{2,eto}$**

Load capacity of the gearbox
c is the ratio between the permissible rated torque of the gearbox and the rated torque of the three-phase AC motor (converted to the driven shaft).
c must be always higher than the service factor **k** determined for the application **k**.

$$c = \frac{M_{2,zul}}{M_{1N} \cdot i \cdot \eta_{Getr}} > k$$

Moment of inertia of geared motor

Ratio i

Product Gearbox

Product Motor

Type of motor cooling

Page number for dimensions



Selection tables

2-stage gearboxes

Inverter operation						i	Product		Cooling	
$M_{2, max}$ [Nm]	$n_{2, th}$ [r/min]	M_2 [Nm]	$n_{2, eto}$ [r/min]	c	J [kgcm²]		g500	MCA		
49	787	10	787	5.7	3.300	5.021	-S130	10I40	natural	29
62	615	12	615	5.0	3.000	6.425	-S130	10I40	natural	29
63	837	22	837	2.1	9.900	3.661	-S130	13I34	forced	45
68	562	14	562	4.9	2.900	7.029	-S130	10I40	natural	29
87	630	25	630	2.5	8.900	6.425	-S130	13I41	natural	29
87	531	39	531	1.7	8.900	6.425	-S130	13I34	forced	45
92	576	27	576	2.4	8.800	7.029	-S130	13I41	natural	29
92	485	43	485	1.6	8.800	7.029	-S130	13I34	forced	45
130	270	28	270	3.3	2.700	14.606	-S130	10I40	natural	29
130	247	31	247	3.0	2.600	15.979	-S130	10I40	natural	29
130	219	35	219	3.0	2.700	18.069	-S130	10I40	natural	29
130	194	40	194	2.7	2.600	20.381	-S130	10I40	natural	29
130	171	45	171	2.4	2.600	23.048	-S130	10I40	natural	29
130	162	97	162	1.1	8.400	24.967	-S130	13I41	natural	29
130	158	48	158	2.2	2.500	24.967	-S130	10I40	natural	29
130	140	55	140	1.9	2.600	28.233	-S130	10I40	natural	29
130	126	61	126	1.9	2.500	31.387	-S130	10I40	natural	29
130	111	69	111	1.7	2.500	35.493	-S130	10I40	natural	29
130	98	78	98	1.5	2.500	40.422	-S130	10I40	natural	29
130	86	89	86	1.3	2.500	45.711	-S130	10I40	natural	29
142	745	28	745	5.1	11.000	4.579	-S400	13I34	forced	53
164	648	32	648	4.3	9.800	5.267	-S220	13I34	forced	49
178	426	45	426	3.9	22.000	3.840	-S220	14L16	forced	49
181	380	34	380	4.8	21.000	5.267	-S220	14L20	natural	33
181	310	61	310	2.9	21.000	5.267	-S220	14L16	forced	49
182	582	36	582	4.7	10.000	5.860	-S400	13I34	forced	53
199	532	39	532	4.5	9.900	6.411	-S400	13I34	forced	53
203	689	35	689	5.0	41.000	3.339	-S400	17N23	natural	37
203	503	70	503	2.8	41.000	3.339	-S400	17N17	forced	53
217	261	50	261	4.0	21.000	7.667	-S220	14L20	natural	33
217	213	89	213	2.4	21.000	7.667	-S220	14L16	forced	49
220	296	44	296	4.5	21.000	6.767	-S220	14L20	natural	33
220	263	79	263	2.1	8.900	12.992	-S220	13I34	forced	49
220	244	64	244	2.5	8.700	16.571	-S220	13I41	natural	33
220	242	79	242	2.7	21.000	6.767	-S220	14L16	forced	49
220	216	60	216	3.3	20.000	9.280	-S220	14L20	natural	33
220	216	73	216	2.5	8.700	18.776	-S220	13I41	natural	33
220	206	101	206	1.6	8.700	16.571	-S220	13I34	forced	49
220	200	79	200	2.3	8.600	20.300	-S220	13I41	natural	33
220	190	68	190	2.9	20.000	10.514	-S220	14L20	natural	33



Selection tables

2-stage gearboxes

Inverter operation						i	Product		Cooling	
$M_{2, max}$ [Nm]	$n_{2, th}$ [r/min]	M_2 [Nm]	$n_{2, eto}$ [r/min]	c	J [kgcm²]		g500	MCA		
220	182	115	182	1.7	8.700	18.776	-S220	13I34	forced	49
220	176	89	176	2.0	8.600	23.000	-S220	13I41	natural	33
220	176	108	176	2.0	20.000	9.280	-S220	14L16	forced	49
220	172	45	172	4.1	2.700	23.000	-S220	10I40	natural	33
220	168	77	168	2.6	20.000	11.876	-S220	14L20	natural	33
220	168	124	168	1.5	8.600	20.300	-S220	13I34	forced	49
220	156	122	156	1.8	20.000	10.514	-S220	14L16	forced	49
220	154	84	154	2.4	20.000	12.992	-S220	14L20	natural	33
220	153	103	153	1.8	8.500	26.422	-S220	13I41	natural	33
220	150	51	150	3.5	2.600	26.422	-S220	10I40	natural	33
220	149	87	149	2.3	20.000	13.456	-S220	14L20	natural	33
220	148	141	148	1.4	8.600	23.000	-S220	13I34	forced	49
220	138	138	138	1.6	20.000	11.876	-S220	14L16	forced	49
220	136	96	136	2.1	20.000	14.720	-S220	14L20	natural	33
220	135	116	135	1.6	8.500	29.937	-S220	13I41	natural	33
220	132	58	132	3.1	2.600	29.937	-S220	10I40	natural	33
220	129	162	129	1.2	8.500	26.422	-S220	13I34	forced	49
220	126	151	126	1.4	20.000	12.992	-S220	14L16	forced	49
220	123	128	123	1.6	8.500	32.867	-S220	13I41	natural	33
220	122	157	122	1.4	20.000	13.456	-S220	14L16	forced	49
220	121	108	121	1.9	20.000	16.571	-S220	14L20	natural	33
220	120	64	120	3.1	2.600	32.867	-S220	10I40	natural	33
220	114	183	114	1.0	8.500	29.937	-S220	13I34	forced	49
220	111	171	111	1.3	20.000	14.720	-S220	14L16	forced	49
220	109	145	109	1.4	8.400	37.238	-S220	13I41	natural	33
220	107	122	107	1.8	20.000	18.776	-S220	14L20	natural	33
220	106	72	106	2.8	2.500	37.238	-S220	10I40	natural	33
220	104	201	104	1.1	8.500	32.867	-S220	13I34	forced	49
220	99	132	99	1.7	20.000	20.300	-S220	14L20	natural	33
220	99	193	99	1.1	20.000	16.571	-S220	14L16	forced	49
220	93	83	93	2.4	2.500	42.533	-S220	10I40	natural	33
220	87	150	87	1.5	20.000	23.000	-S220	14L20	natural	33
220	87	219	87	1.0	20.000	18.776	-S220	14L16	forced	49
220	82	94	82	2.1	2.500	48.190	-S220	10I40	natural	33
220	77	100	77	2.0	2.500	51.620	-S220	10I40	natural	33
220	68	113	68	1.8	2.500	58.486	-S220	10I40	natural	33
243	502	48	502	4.4	39.000	4.579	-S400	17N23	natural	37
243	367	96	367	2.5	39.000	4.579	-S400	17N17	forced	53
243	357	53	357	4.4	22.000	4.579	-S400	14L16	forced	53
258	590	61	590	3.2	21.000	5.860	-S400	14L35	forced	53



Selection tables

2-stage gearboxes

Inverter operation						i	Product		Cooling	
$M_{2, max}$ [Nm]	$n_{2, th}$ [r/min]	M_2 [Nm]	$n_{2, eto}$ [r/min]	c	J [kgcm²]		g500	MCA		
258	393	61	393	3.6	38.000	5.860	-S400	17N23	natural	37
258	287	122	287	2.0	38.000	5.860	-S400	17N17	forced	53
258	279	68	279	3.7	21.000	5.860	-S400	14L16	forced	53
261	539	67	539	3.0	21.000	6.411	-S400	14L35	forced	53
261	359	67	359	3.4	38.000	6.411	-S400	17N23	natural	37
261	262	134	262	1.9	38.000	6.411	-S400	17N17	forced	53
261	255	75	255	3.4	21.000	6.411	-S400	14L16	forced	53
268	69	111	69	2.2	2.500	56.960	-S400	10I40	natural	37
302	61	125	61	2.2	2.500	64.354	-S400	10I40	natural	37
314	84	91	84	3.1	2.500	46.933	-S400	10I40	natural	37
332	429	82	429	3.9	45.000	3.920	-S660	17N17	forced	57
348	75	103	75	3.1	2.500	53.026	-S400	10I40	natural	37
359	295	71	295	4.3	9.500	11.569	-S400	13I34	forced	53
365	308	78	308	4.0	38.000	7.467	-S400	17N23	natural	37
365	225	156	225	2.3	38.000	7.467	-S400	17N17	forced	53
365	219	87	219	4.1	21.000	7.467	-S400	14L16	forced	53
380	273	88	273	3.7	38.000	8.436	-S400	17N23	natural	37
380	199	176	199	2.1	38.000	8.436	-S400	17N17	forced	53
380	194	98	194	3.8	21.000	8.436	-S400	14L16	forced	53
400	260	80	260	3.8	9.200	13.105	-S400	13I34	forced	53
400	238	88	238	3.5	9.100	14.336	-S400	13I34	forced	53
400	230	90	230	3.4	9.100	14.806	-S400	13I34	forced	53
400	225	107	225	3.2	37.000	10.240	-S400	17N23	natural	37
400	211	99	211	3.1	9.000	16.197	-S400	13I34	forced	53
400	199	121	199	2.9	37.000	11.569	-S400	17N23	natural	37
400	196	80	196	4.1	8.800	20.659	-S400	13I41	natural	37
400	189	192	189	1.8	20.000	18.286	-S400	14L35	forced	53
400	187	112	187	3.1	8.800	18.286	-S400	13I34	forced	53
400	181	87	181	3.8	8.700	22.400	-S400	13I41	natural	37
400	176	137	176	2.5	37.000	13.105	-S400	17N23	natural	37
400	167	216	167	1.6	20.000	20.659	-S400	14L35	forced	53
400	165	126	165	2.7	8.800	20.659	-S400	13I34	forced	53
400	164	214	164	1.8	37.000	10.240	-S400	17N17	forced	53
400	160	98	160	3.3	8.700	25.308	-S400	13I41	natural	37
400	160	119	160	3.3	21.000	10.240	-S400	14L16	forced	53
400	160	150	160	2.3	37.000	14.336	-S400	17N23	natural	37
400	155	155	155	2.2	37.000	14.806	-S400	17N23	natural	37
400	154	235	154	1.5	20.000	22.400	-S400	14L35	forced	53
400	153	85	153	4.3	20.000	13.105	-S400	14L20	natural	37
400	152	137	152	2.5	8.700	22.400	-S400	13I34	forced	53



Selection tables

2-stage gearboxes

Inverter operation						i	Product		Cooling	
$M_{2, max}$ [Nm]	$n_{2, th}$ [r/min]	M_2 [Nm]	$n_{2, eto}$ [r/min]	c	J [kgcm²]		g500	MCA		
400	145	241	145	1.6	37.000	11.569	-S400	17N17	forced	53
400	142	170	142	2.0	37.000	16.197	-S400	17N23	natural	37
400	141	135	141	2.9	20.000	11.569	-S400	14L16	forced	53
400	140	93	140	3.9	20.000	14.336	-S400	14L20	natural	37
400	139	113	139	2.9	8.500	29.156	-S400	13I41	natural	37
400	137	265	137	1.3	20.000	25.308	-S400	14L35	forced	53
400	135	96	135	3.8	20.000	14.806	-S400	14L20	natural	37
400	135	155	135	2.2	8.700	25.308	-S400	13I34	forced	53
400	128	273	128	1.4	37.000	13.105	-S400	17N17	forced	53
400	126	192	126	2.1	37.000	18.286	-S400	17N23	natural	37
400	125	153	125	2.5	20.000	13.105	-S400	14L16	forced	53
400	124	105	124	3.5	20.000	16.197	-S400	14L20	natural	37
400	123	128	123	2.8	8.500	32.940	-S400	13I41	natural	37
400	117	178	117	1.9	8.500	29.156	-S400	13I34	forced	53
400	117	299	117	1.3	37.000	14.336	-S400	17N17	forced	53
400	114	167	114	2.3	20.000	14.336	-S400	14L16	forced	53
400	114	309	114	1.3	37.000	14.806	-S400	17N17	forced	53
400	112	141	112	2.6	8.500	36.267	-S400	13I41	natural	37
400	111	216	111	1.8	36.000	20.659	-S400	17N23	natural	37
400	110	172	110	2.3	20.000	14.806	-S400	14L16	forced	53
400	109	119	109	3.4	20.000	18.286	-S400	14L20	natural	37
400	104	201	104	1.9	8.500	32.940	-S400	13I34	forced	53
400	104	338	104	1.1	37.000	16.197	-S400	17N17	forced	53
400	101	189	101	2.1	20.000	16.197	-S400	14L16	forced	53
400	99	159	99	2.3	8.500	40.974	-S400	13I41	natural	37
400	97	134	97	3.0	20.000	20.659	-S400	14L20	natural	37
400	94	222	94	1.7	8.500	36.267	-S400	13I34	forced	53
400	92	381	92	1.1	37.000	18.286	-S400	17N17	forced	53
400	89	146	89	2.8	20.000	22.400	-S400	14L20	natural	37
400	89	213	89	1.9	20.000	18.286	-S400	14L16	forced	53
400	83	250	83	1.5	8.500	40.974	-S400	13I34	forced	53
400	79	165	79	2.4	20.000	25.308	-S400	14L20	natural	37
400	79	241	79	1.7	20.000	20.659	-S400	14L16	forced	53
400	73	261	73	1.5	20.000	22.400	-S400	14L16	forced	53
400	65	295	65	1.4	20.000	25.308	-S400	14L16	forced	53
446	83	190	83	2.1	8.500	48.950	-S660	13I41	natural	41
446	81	95	81	4.3	2.600	48.950	-S660	10I40	natural	41
446	70	299	70	1.4	8.500	48.950	-S660	13I34	forced	57
455	313	112	313	3.9	41.000	5.376	-S660	17N17	forced	57
493	244	144	244	3.3	39.000	6.880	-S660	17N17	forced	57



Selection tables

2-stage gearboxes

Inverter operation						i	Product		Cooling	
$M_{2, max}$ [Nm]	$n_{2, th}$ [r/min]	M_2 [Nm]	$n_{2, eto}$ [r/min]	c	J [kgcm²]		g500	MCA		
508	73	216	73	2.1	8.500	55.773	-S660	13I41	natural	41
508	71	108	71	4.3	2.600	55.773	-S660	10I40	natural	41
508	61	341	61	1.4	8.500	55.773	-S660	13I34	forced	57
543	262	134	262	3.9	41.000	6.417	-S660	17N17	forced	57
545	100	157	100	3.1	8.600	40.333	-S660	13I41	natural	41
545	85	247	85	2.1	8.600	40.333	-S660	13I34	forced	57
578	138	263	138	1.9	20.000	25.056	-S660	14L35	forced	57
578	136	153	136	3.3	8.900	25.056	-S660	13I34	forced	57
578	92	263	92	2.2	37.000	25.056	-S660	17N23	natural	41
578	80	163	80	3.5	20.000	25.056	-S660	14L20	natural	41
578	67	523	67	1.1	37.000	25.056	-S660	17N17	forced	57
578	65	292	65	2.0	20.000	25.056	-S660	14L16	forced	57
593	230	153	230	3.7	41.000	7.311	-S660	17N17	forced	57
620	88	178	88	3.1	8.600	45.956	-S660	13I41	natural	41
620	74	281	74	2.1	8.600	45.956	-S660	13I34	forced	57
625	168	209	168	2.9	39.000	10.027	-S660	17N17	forced	57
638	191	184	191	3.4	39.000	8.800	-S660	17N17	forced	57
660	220	165	220	3.0	21.000	15.714	-S660	14L35	forced	57
660	193	188	193	2.7	21.000	17.905	-S660	14L35	forced	57
660	187	129	187	4.4	38.000	12.320	-S660	17N23	natural	41
660	180	202	180	2.8	20.000	19.250	-S660	14L35	forced	57
660	179	134	179	4.3	38.000	12.832	-S660	17N23	natural	41
660	164	147	164	3.9	38.000	14.037	-S660	17N23	natural	41
660	158	230	158	2.5	20.000	21.933	-S660	14L35	forced	57
660	156	134	156	4.3	9.400	21.933	-S660	13I34	forced	57
660	149	235	149	2.7	38.000	11.262	-S660	17N17	forced	57
660	146	165	146	3.5	38.000	15.714	-S660	17N23	natural	41
660	136	257	136	2.5	38.000	12.320	-S660	17N17	forced	57
660	133	143	133	4.5	21.000	12.320	-S660	14L16	forced	57
660	131	268	131	2.4	38.000	12.832	-S660	17N17	forced	57
660	129	188	129	3.0	37.000	17.905	-S660	17N23	natural	41
660	127	149	127	4.3	21.000	12.832	-S660	14L16	forced	57
660	121	299	121	1.9	20.000	28.548	-S660	14L35	forced	57
660	120	202	120	3.2	37.000	19.250	-S660	17N23	natural	41
660	120	293	120	2.2	38.000	14.037	-S660	17N17	forced	57
660	119	174	119	3.3	8.900	28.548	-S660	13I34	forced	57
660	117	163	117	3.9	21.000	14.037	-S660	14L16	forced	57
660	114	138	114	4.3	8.700	35.511	-S660	13I41	natural	41
660	111	327	111	1.9	20.000	31.167	-S660	14L35	forced	57
660	109	191	109	3.3	8.800	31.167	-S660	13I34	forced	57



Selection tables

2-stage gearboxes

Inverter operation						i	Product		Cooling	
$M_{2, max}$ [Nm]	$n_{2, th}$ [r/min]	M_2 [Nm]	$n_{2, eto}$ [r/min]	c	J [kgcm²]		g500	MCA		
660	107	328	107	1.9	38.000	15.714	-S660	17N17	forced	57
660	105	230	105	2.8	37.000	21.933	-S660	17N23	natural	41
660	104	183	104	3.5	21.000	15.714	-S660	14L16	forced	57
660	97	372	97	1.7	20.000	35.511	-S660	14L35	forced	57
660	96	217	96	2.9	8.700	35.511	-S660	13I34	forced	57
660	94	373	94	1.7	37.000	17.905	-S660	17N17	forced	57
660	91	208	91	3.1	21.000	17.905	-S660	14L16	forced	57
660	87	402	87	1.6	37.000	19.250	-S660	17N17	forced	57
660	85	224	85	2.9	20.000	19.250	-S660	14L16	forced	57
660	81	299	81	2.2	37.000	28.548	-S660	17N23	natural	41
660	77	458	77	1.4	37.000	21.933	-S660	17N17	forced	57
660	75	255	75	2.6	20.000	21.933	-S660	14L16	forced	57
660	70	186	70	3.6	20.000	28.548	-S660	14L20	natural	41
660	64	203	64	3.3	20.000	31.167	-S660	14L20	natural	41
660	59	596	59	1.1	37.000	28.548	-S660	17N17	forced	57
660	57	332	57	2.0	20.000	28.548	-S660	14L16	forced	57
660	56	231	56	2.9	20.000	35.511	-S660	14L20	natural	41
660	53	363	53	1.8	20.000	31.167	-S660	14L16	forced	57
660	46	413	46	1.6	20.000	35.511	-S660	14L16	forced	57



Selection tables

3-stage gearboxes

Inverter operation						i	Product		Cooling	
$M_{2, max}$ [Nm]	$n_{2, th}$ [r/min]	M_2 [Nm]	$n_{2, eto}$ [r/min]	c	J [kgcm²]		g500	MCA		
220	75	101	75	1.8	2.500	52.587	-S220	10I40	natural	33
220	66	114	66	1.6	2.500	59.581	-S220	10I40	natural	33
220	59	129	59	1.4	2.500	67.298	-S220	10I40	natural	33
220	52	146	52	1.4	2.500	76.249	-S220	10I40	natural	33
220	46	165	46	1.2	2.500	86.079	-S220	10I40	natural	33
220	41	186	41	1.1	2.500	97.528	-S220	10I40	natural	33
399	37	205	37	1.8	2.500	107.314	-S400	10I40	natural	37
399	28	266	28	1.4	2.400	139.313	-S400	10I40	natural	37
400	68	111	68	3.0	2.500	58.027	-S400	10I40	natural	37
400	60	125	60	2.6	2.500	65.559	-S400	10I40	natural	37
400	53	142	53	2.6	2.500	74.260	-S400	10I40	natural	37
400	47	160	47	2.3	2.500	83.900	-S400	10I40	natural	37
400	42	182	42	2.0	2.500	94.984	-S400	10I40	natural	37
400	32	236	32	1.6	2.400	123.307	-S400	10I40	natural	37
610	62	122	62	4.5	2.700	63.817	-S660	10I40	natural	41
625	81	191	81	2.7	8.700	49.867	-S660	13I41	natural	41
625	68	300	68	1.8	8.700	49.867	-S660	13I34	forced	57
650	71	217	71	2.4	8.700	56.818	-S660	13I41	natural	41
650	60	342	60	1.6	8.700	56.818	-S660	13I34	forced	57
660	64	244	64	2.2	8.600	63.817	-S660	13I41	natural	41
660	58	267	58	2.0	8.500	69.813	-S660	13I41	natural	41
660	57	133	57	4.1	2.600	69.813	-S660	10I40	natural	41
660	56	278	56	2.1	8.600	72.713	-S660	13I41	natural	41
660	54	139	54	4.3	2.700	72.713	-S660	10I40	natural	41
660	53	384	53	1.5	8.600	63.817	-S660	13I34	forced	57
660	51	304	51	2.0	8.500	79.545	-S660	13I41	natural	41
660	50	152	50	4.0	2.600	79.545	-S660	10I40	natural	41
660	49	420	49	1.4	8.500	69.813	-S660	13I34	forced	57
660	47	438	47	1.4	8.600	72.713	-S660	13I34	forced	57
660	46	340	46	1.8	8.500	89.048	-S660	13I41	natural	41
660	44	170	44	3.5	2.600	89.048	-S660	10I40	natural	41
660	43	479	43	1.3	8.500	79.545	-S660	13I34	forced	57
660	40	388	40	1.5	8.500	101.460	-S660	13I41	natural	41
660	39	194	39	3.1	2.600	101.460	-S660	10I40	natural	41
660	38	536	38	1.2	8.500	89.048	-S660	13I34	forced	57
660	37	417	37	1.4	8.400	109.083	-S660	13I41	natural	41
660	36	208	36	2.9	2.500	109.083	-S660	10I40	natural	41
660	34	611	34	1.0	8.500	101.460	-S660	13I34	forced	57
660	33	475	33	1.3	8.400	124.289	-S660	13I41	natural	41
660	32	238	32	2.5	2.500	124.289	-S660	10I40	natural	41



Selection tables

3-stage gearboxes

Inverter operation						i	Product		Cooling	
$M_{2, max}$ [Nm]	$n_{2, th}$ [r/min]	M_2 [Nm]	$n_{2, eto}$ [r/min]	c	J [kgcm²]		g500	MCA		
660	29	262	29	2.3	2.500	137.133	-S660	10I40	natural	41
660	25	299	25	2.0	2.500	156.249	-S660	10I40	natural	41
660	22	338	22	1.8	2.500	176.611	-S660	10I40	natural	41
660	20	385	20	1.6	2.500	201.230	-S660	10I40	natural	41



Dimensions, notes

Notes on the dimensions

The following legend shows the layout of the dimension sheets.

Product gearbox

g500-S130

Driven shaft design

Abmessungen mit Hohlwelle

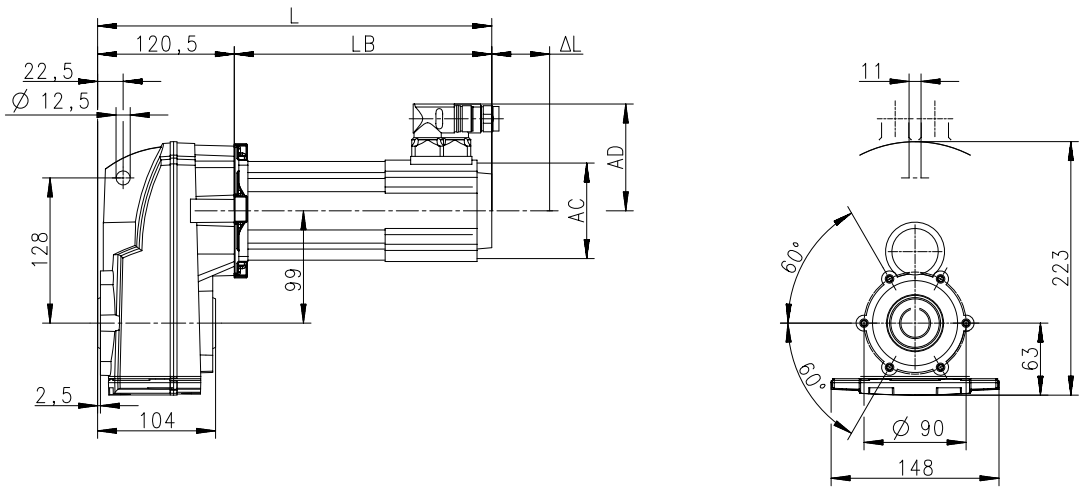

Product Motor

Produkt			MCS						
			06C41	06F41	06I41	09D41	09F38	09H41	09L41
Abmessungen									
Gesamtlänge	**L**	**[mm]**	~~252~~	282	312	304	324	344	384
Länge Motor	**LB**	**[mm]**	~~131.4~~	161.4	191.4	183.9	203.9	223.9	263.9
Länge Motoranbauten	**Δ L**	**[mm]**		100		71			
Motordurchmesser	**AC**	**[mm]**		86		89			
Abstand Motor/Anschluss	**AD**	**[mm]**		77		89.7			

Distance of motor centre to the end of connector

Total length of the drive without built-on accessories

Motor diameter

Motor length without built-on accessories

Additional length of the built-on accessories (longest version)



Dimensions, self-ventilated motors

g500-S130

Dimensions with hollow shaft

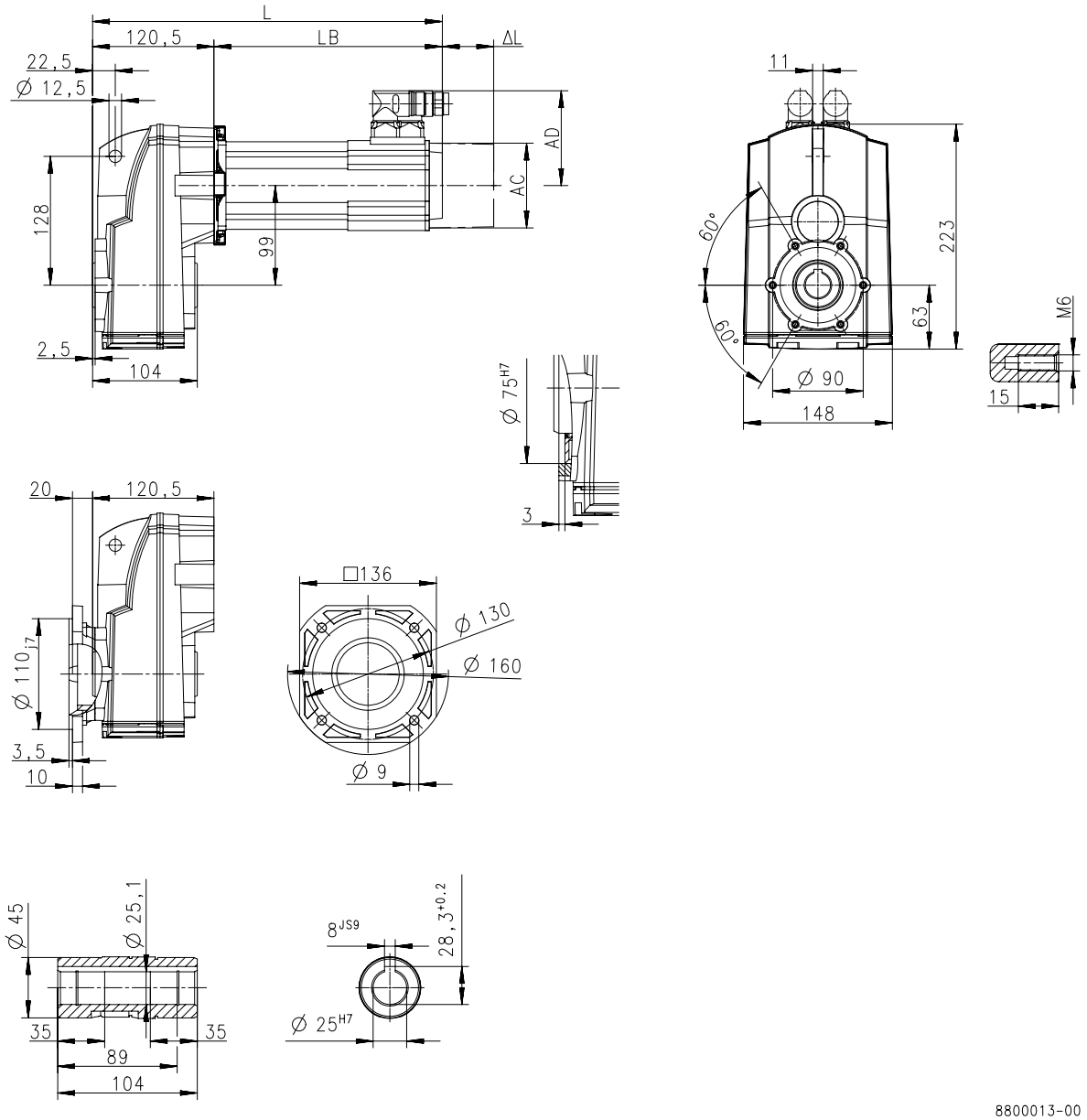

Product			MCA	
			10I40	13I41
Dimensions				
Total length	**L**	**[mm]**	380	388
Motor length	**LB**	**[mm]**	259	267.5
Length of motor options	**Δ L**	**[mm]**	78.5	89
Motor diameter	**AC**	**[mm]**	102	130
Distance motor/connection	**AD**	**[mm]**	90	102



Dimensions, self-ventilated motors

g500-S130

Dimensions with solid shaft

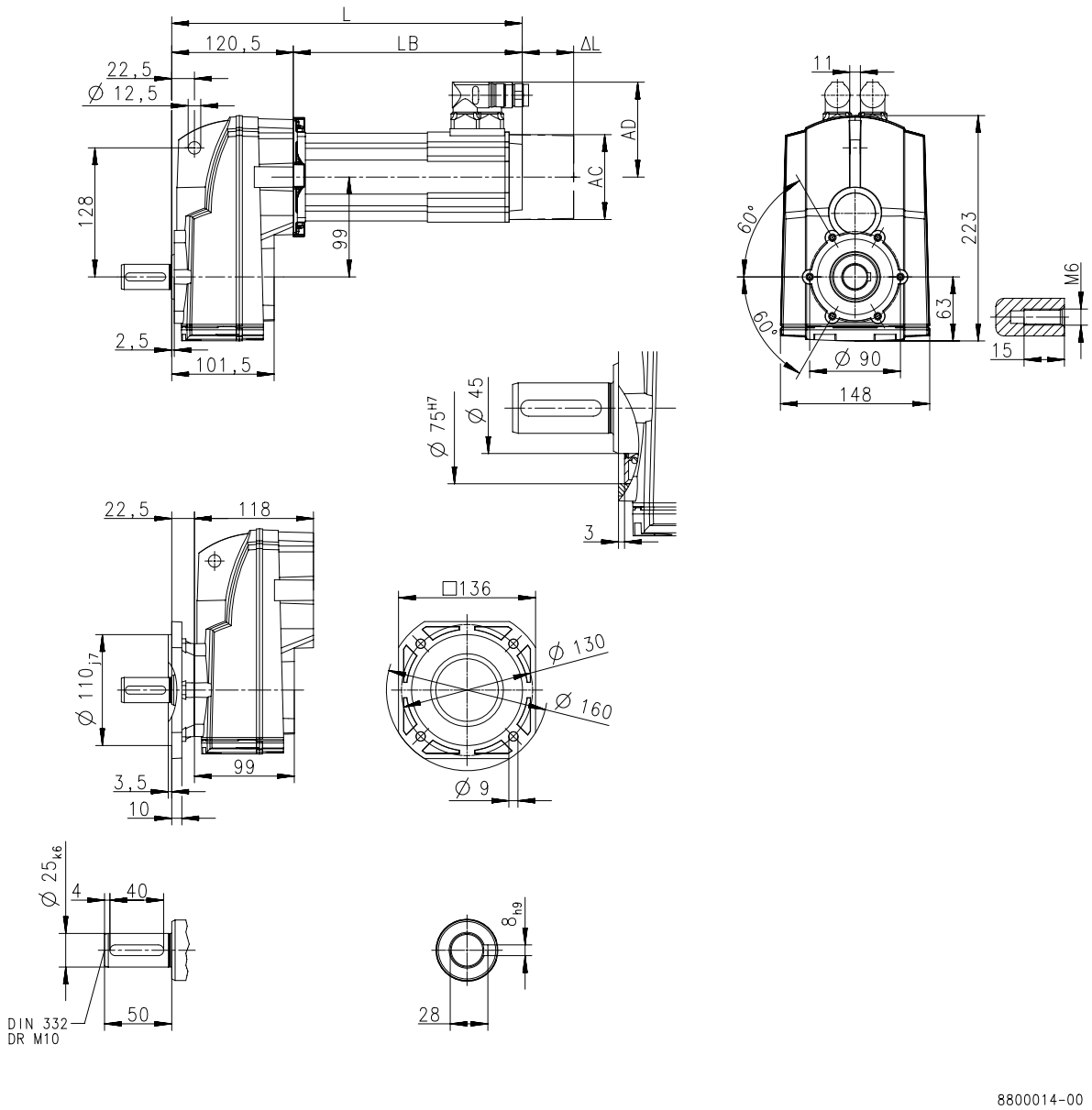

Product			MCA	
			10I40	13I41
Dimensions				
Total length	**L**	**[mm]**	380	388
Motor length	**LB**	**[mm]**	259	267.5
Length of motor options	**Δ L**	**[mm]**	78.5	89
Motor diameter	**AC**	**[mm]**	102	130
Distance motor/connection	**AD**	**[mm]**	90	102



Dimensions, self-ventilated motors

g500-S130

Dimensions with solid shaft and foot

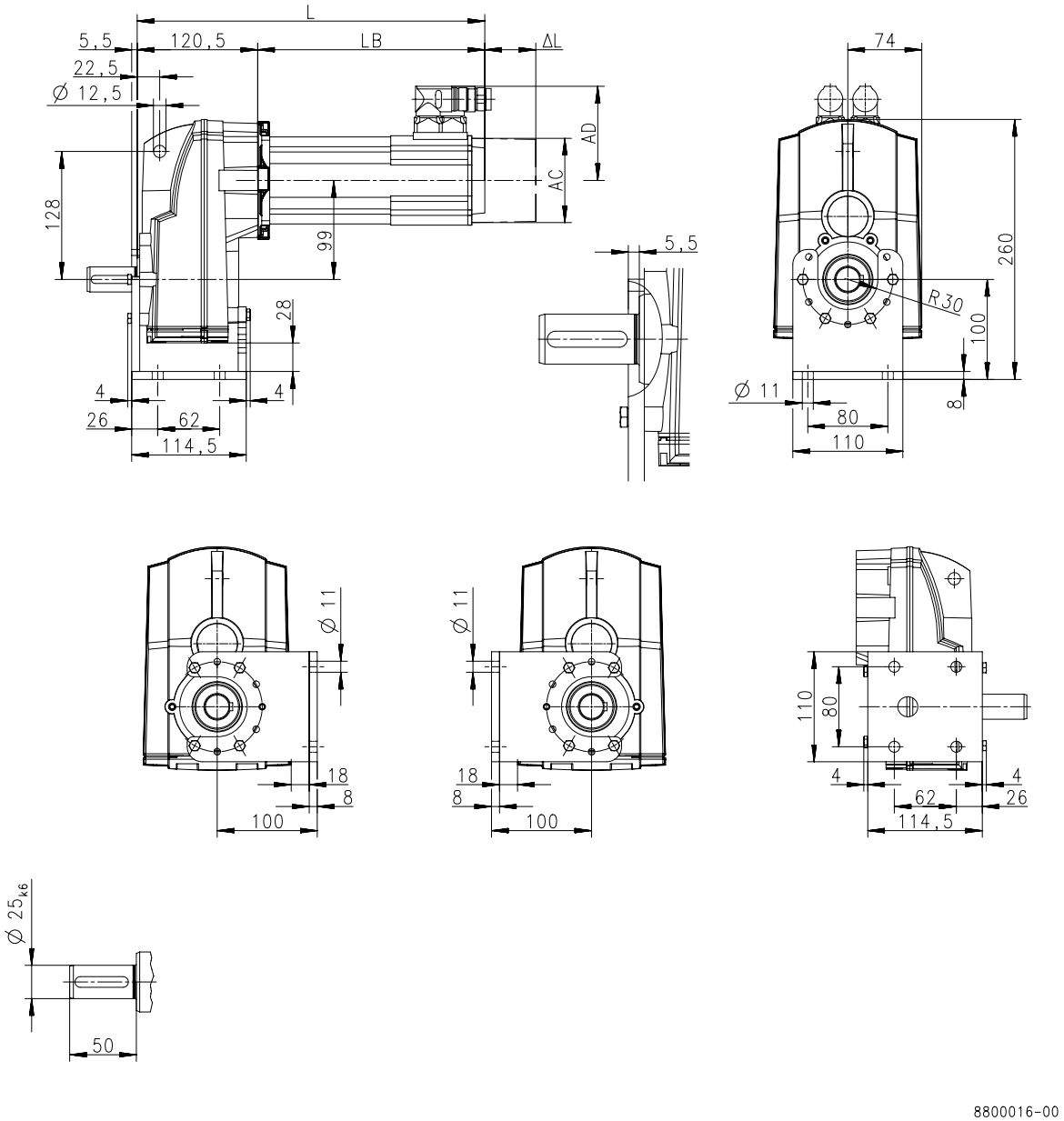

Product			MCA	
			10I40	13I41
Dimensions				
Total length	**L**	**[mm]**	380	388
Motor length	**LB**	**[mm]**	259	267.5
Length of motor options	**Δ L**	**[mm]**	78.5	89
Motor diameter	**AC**	**[mm]**	102	130
Distance motor/connection	**AD**	**[mm]**	90	102



Dimensions, self-ventilated motors

g500-S130

Dimensions with shrink disc

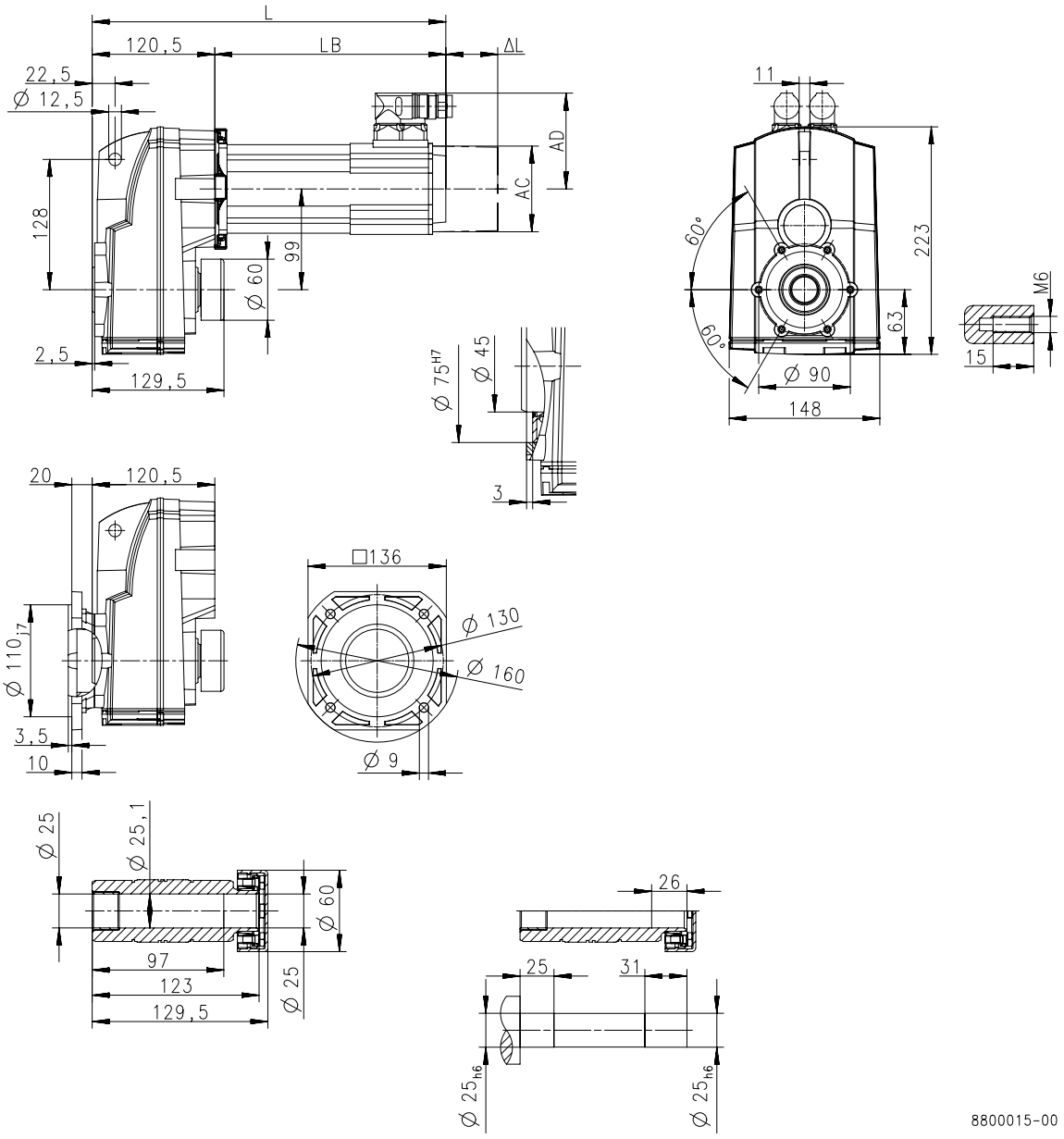

Product			MCA	
			10I40	13I41
Dimensions				
Total length	**L**	**[mm]**	380	388
Motor length	**LB**	**[mm]**	259	267.5
Length of motor options	**Δ L**	**[mm]**	78.5	89
Motor diameter	**AC**	**[mm]**	102	130
Distance motor/connection	**AD**	**[mm]**	90	102



Dimensions, self-ventilated motors

g500-S220

Dimensions with hollow shaft

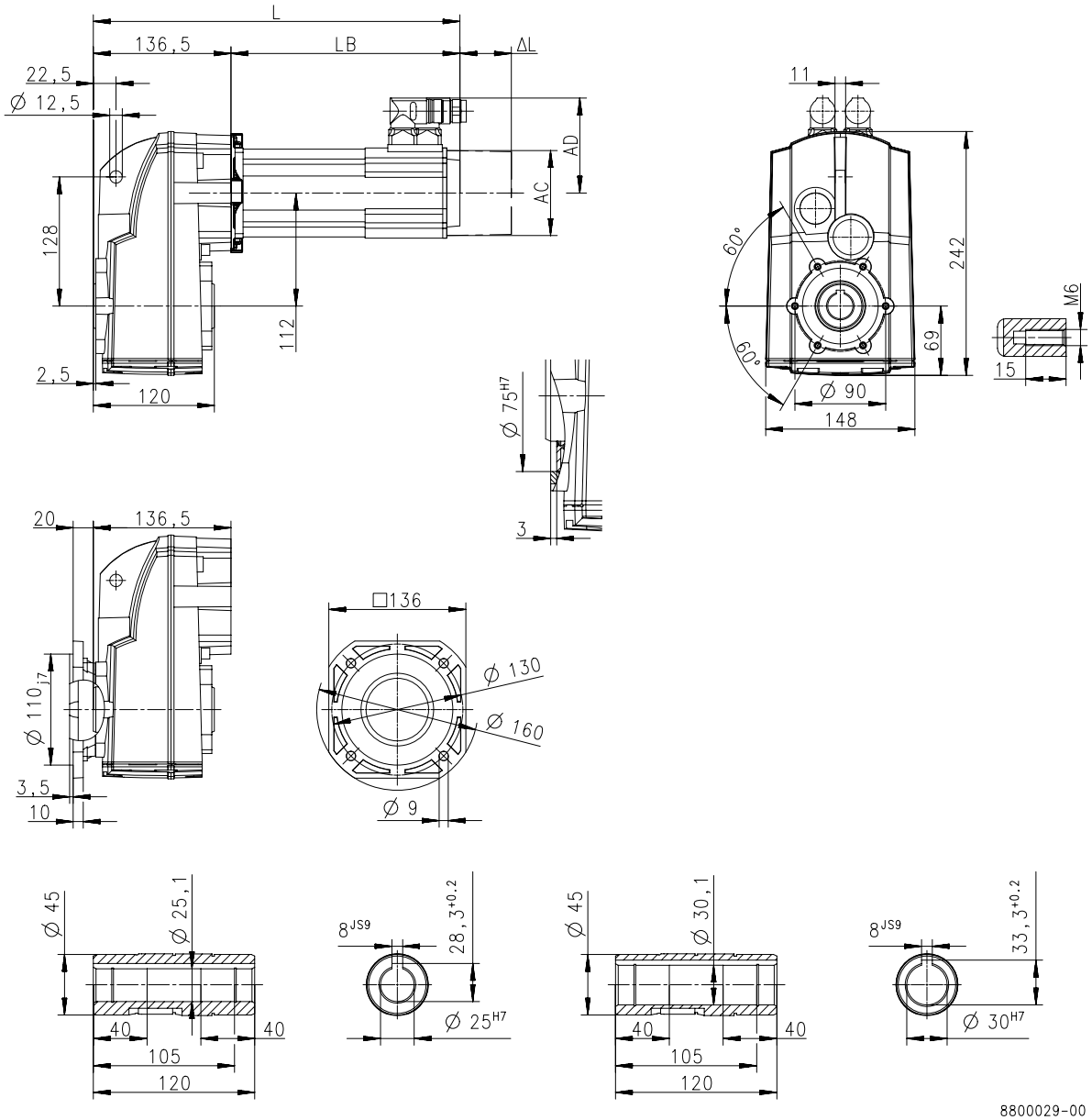

Product			MCA		
			10I40	13I41	14L20
Dimensions					
Total length	**L**	**[mm]**	396	404	454
Motor length	**LB**	**[mm]**	259	267.5	317.5
Length of motor options	**Δ L**	**[mm]**	78.5	89	88.5
Motor diameter	**AC**	**[mm]**	102	130	142
Distance motor/connection	**AD**	**[mm]**	90	102	109



Dimensions, self-ventilated motors

g500-S220

Dimensions with solid shaft

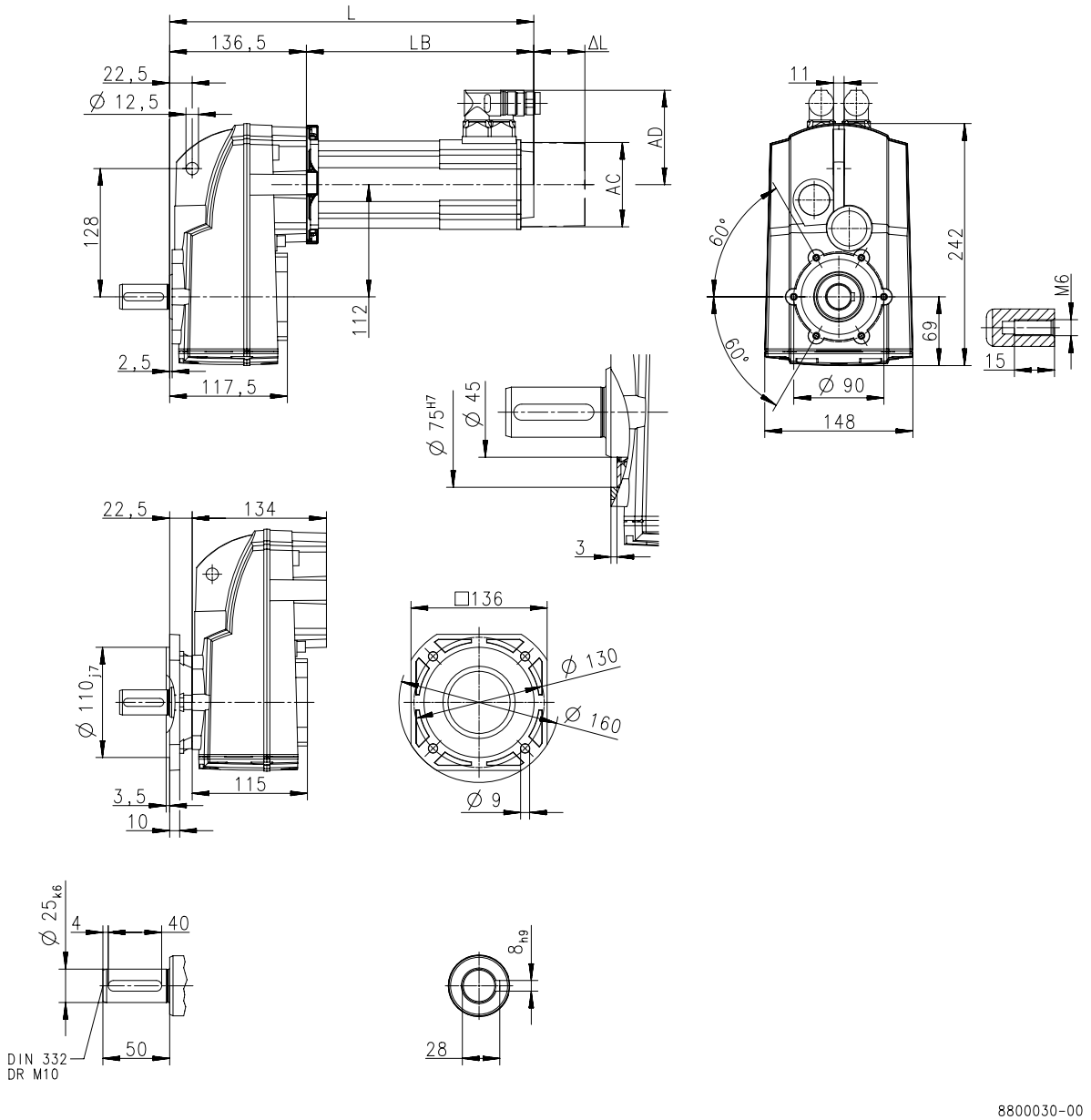

Product			MCA		
			10I40	13I41	14L20
Dimensions					
Total length	**L**	**[mm]**	396	404	454
Motor length	**LB**	**[mm]**	259	267.5	317.5
Length of motor options	**Δ L**	**[mm]**	78.5	89	88.5
Motor diameter	**AC**	**[mm]**	102	130	142
Distance motor/connection	**AD**	**[mm]**	90	102	109



Dimensions, self-ventilated motors

g500-S220

Dimensions with solid shaft and foot

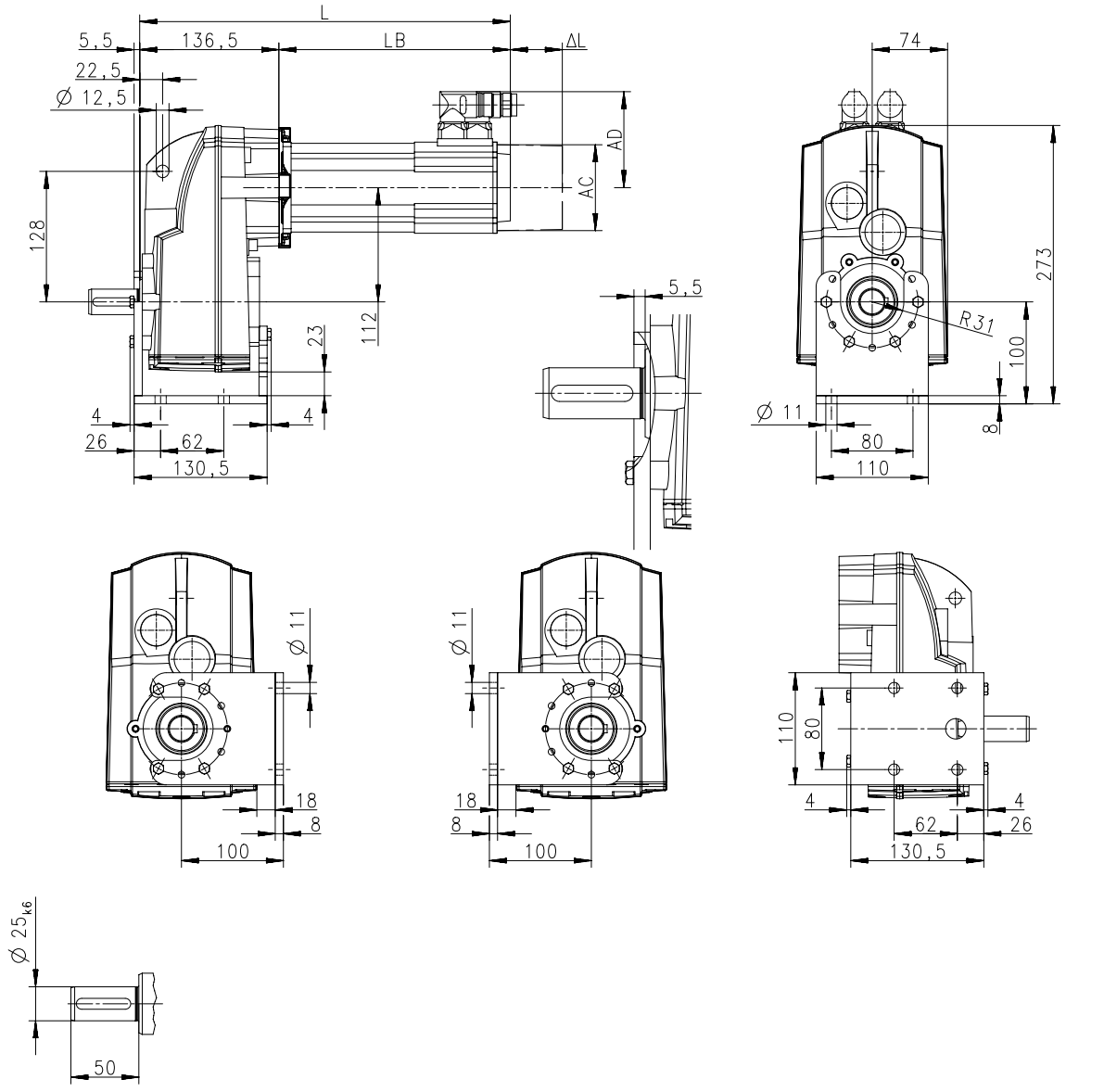

Product			MCA		
			10I40	13I41	14L20
Dimensions					
Total length	**L**	**[mm]**	396	404	454
Motor length	**LB**	**[mm]**	259	267.5	317.5
Length of motor options	**Δ L**	**[mm]**	78.5	89	88.5
Motor diameter	**AC**	**[mm]**	102	130	142
Distance motor/connection	**AD**	**[mm]**	90	102	109



Dimensions, self-ventilated motors

g500-S220

Dimensions with shrink disc

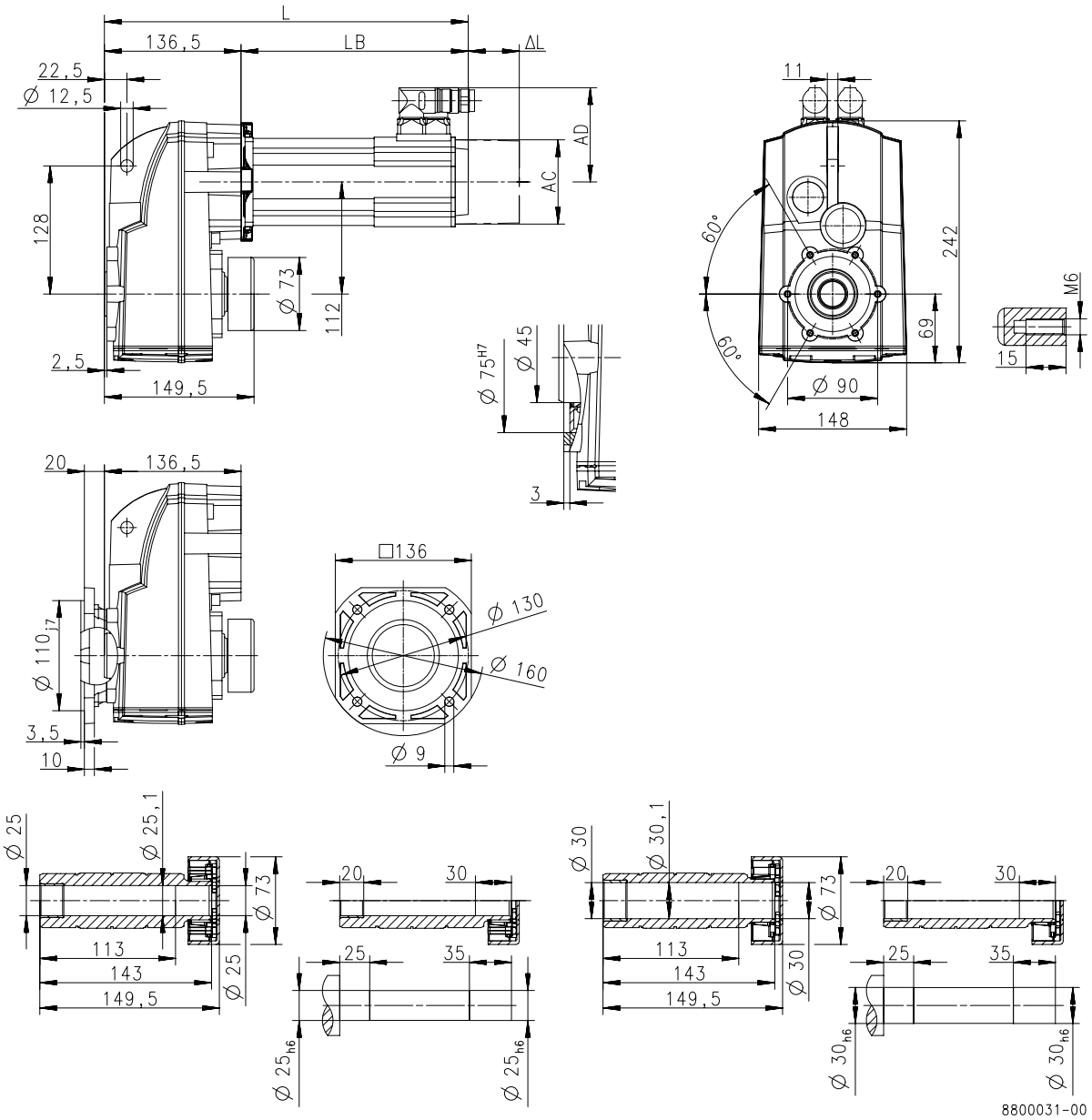

Product			MCA		
			10I40	13I41	14L20
Dimensions					
Total length	**L**	**[mm]**	396	404	454
Motor length	**LB**	**[mm]**	259	267.5	317.5
Length of motor options	**Δ L**	**[mm]**	78.5	89	88.5
Motor diameter	**AC**	**[mm]**	102	130	142
Distance motor/connection	**AD**	**[mm]**	90	102	109



Dimensions, self-ventilated motors

g500-S400

Dimensions with hollow shaft

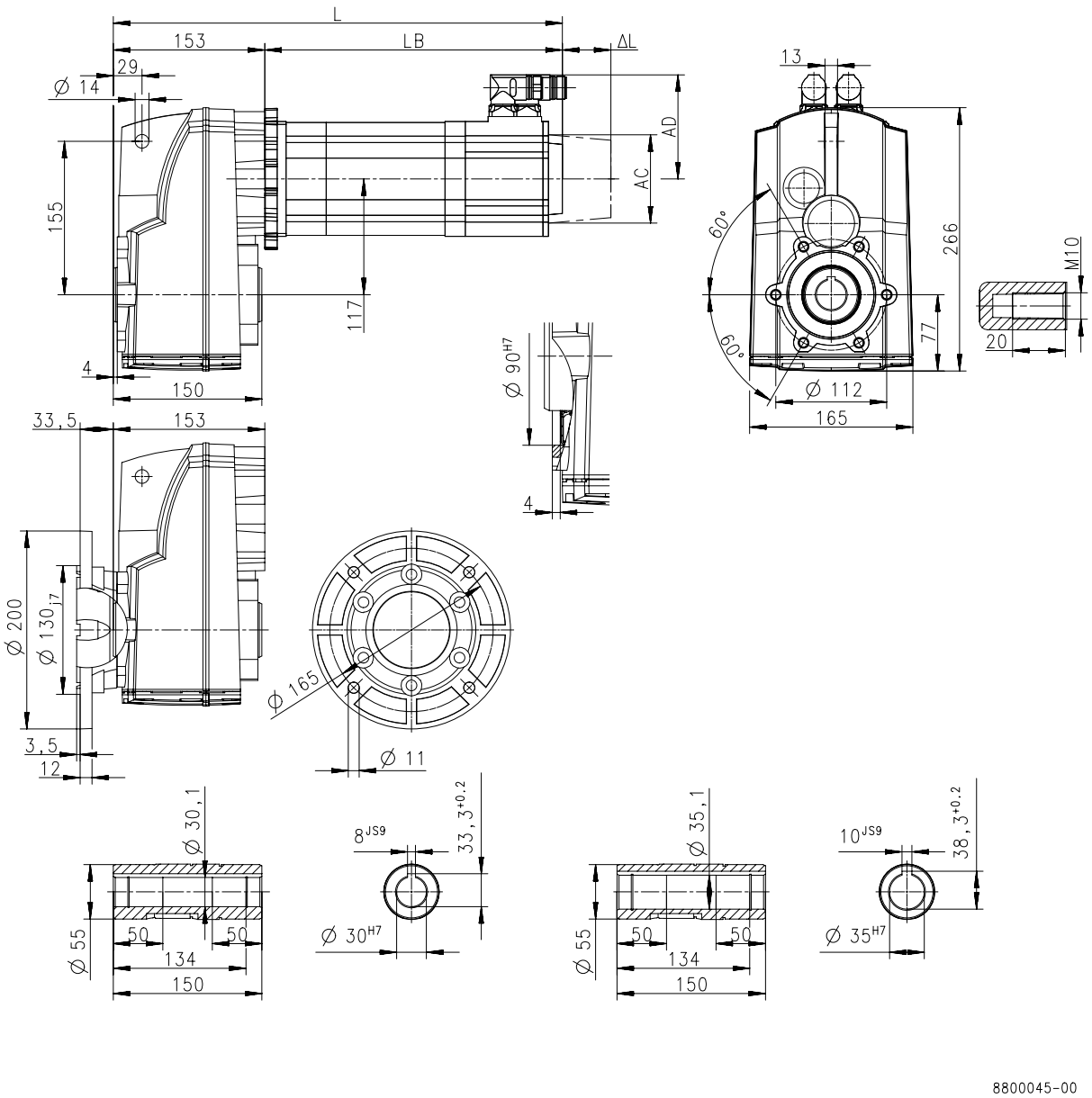

Product			MCA			
			10I40	13I41	14L20	17N23
Dimensions						
Total length	**L**	**[mm]**	412	421	471	510
Motor length	**LB**	**[mm]**	259	267.5	317.5	356.5
Length of motor options	**Δ L**	**[mm]**	78.5	89	88.5	89.2
Motor diameter	**AC**	**[mm]**	102	130	142	165
Distance motor/connection	**AD**	**[mm]**	90	102	109	117.5



Dimensions, self-ventilated motors

g500-S400

Dimensions with solid shaft

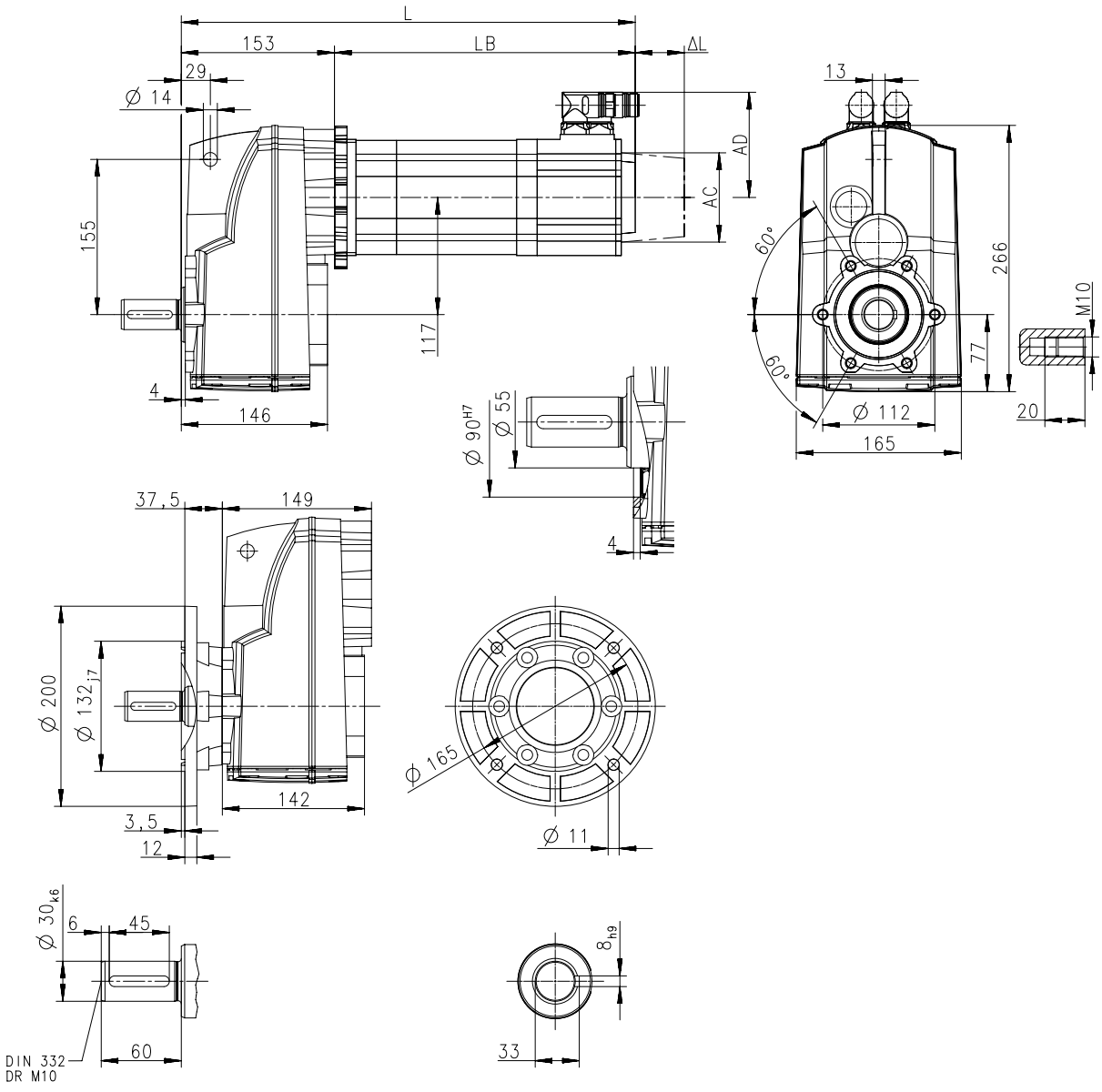

Product			MCA			
			10I40	13I41	14L20	17N23
Dimensions						
Total length	**L**	**[mm]**	412	421	471	510
Motor length	**LB**	**[mm]**	259	267.5	317.5	356.5
Length of motor options	**Δ L**	**[mm]**	78.5	89	88.5	89.2
Motor diameter	**AC**	**[mm]**	102	130	142	165
Distance motor/connection	**AD**	**[mm]**	90	102	109	117.5



Dimensions, self-ventilated motors

g500-S400

Dimensions with solid shaft and foot

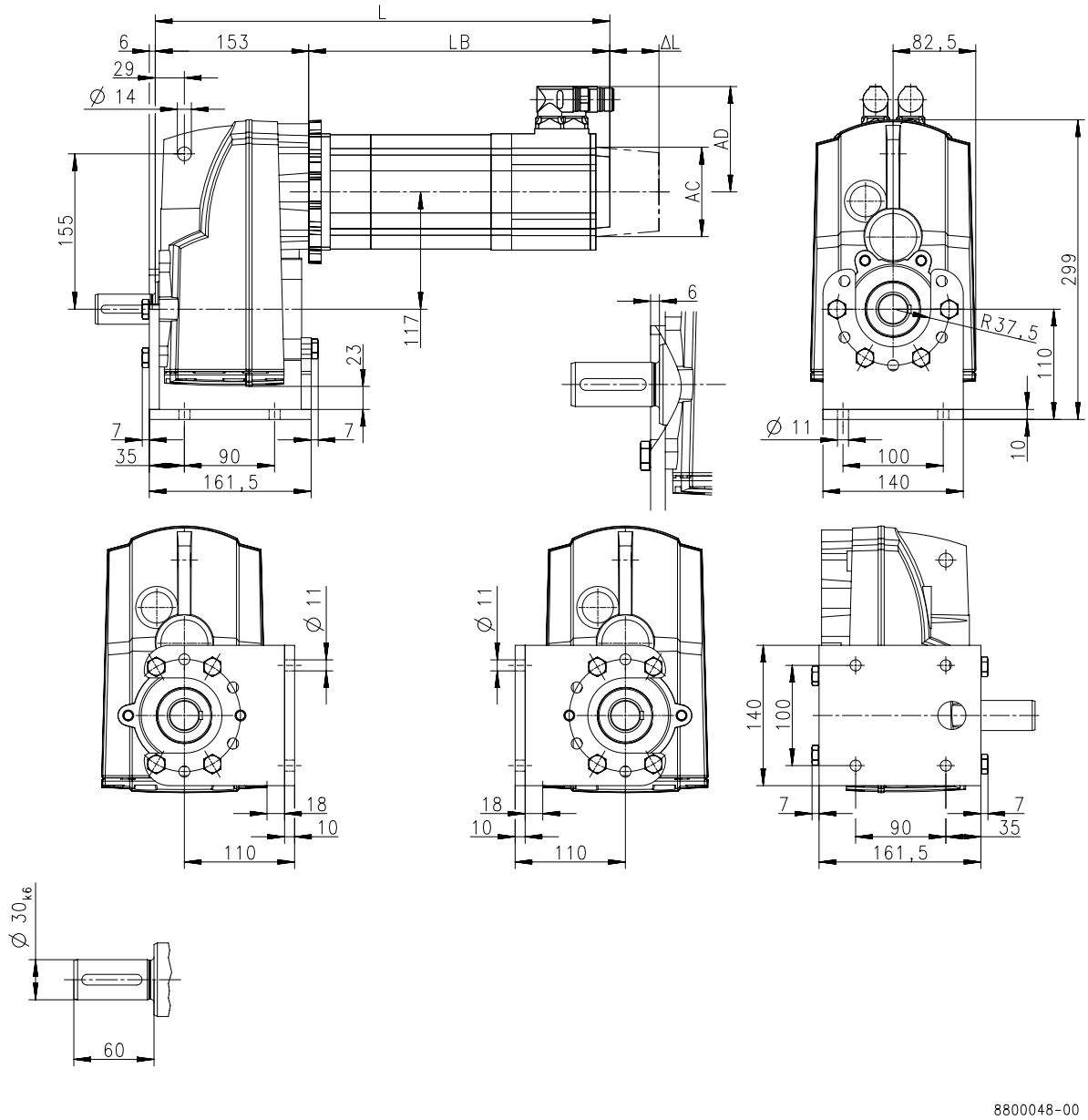

Product			MCA			
			10I40	13I41	14L20	17N23
Dimensions						
Total length	**L**	**[mm]**	412	421	471	510
Motor length	**LB**	**[mm]**	259	267.5	317.5	356.5
Length of motor options	**Δ L**	**[mm]**	78.5	89	88.5	89.2
Motor diameter	**AC**	**[mm]**	102	130	142	165
Distance motor/connection	**AD**	**[mm]**	90	102	109	117.5



Dimensions, self-ventilated motors

g500-S400

Dimensions with shrink disc

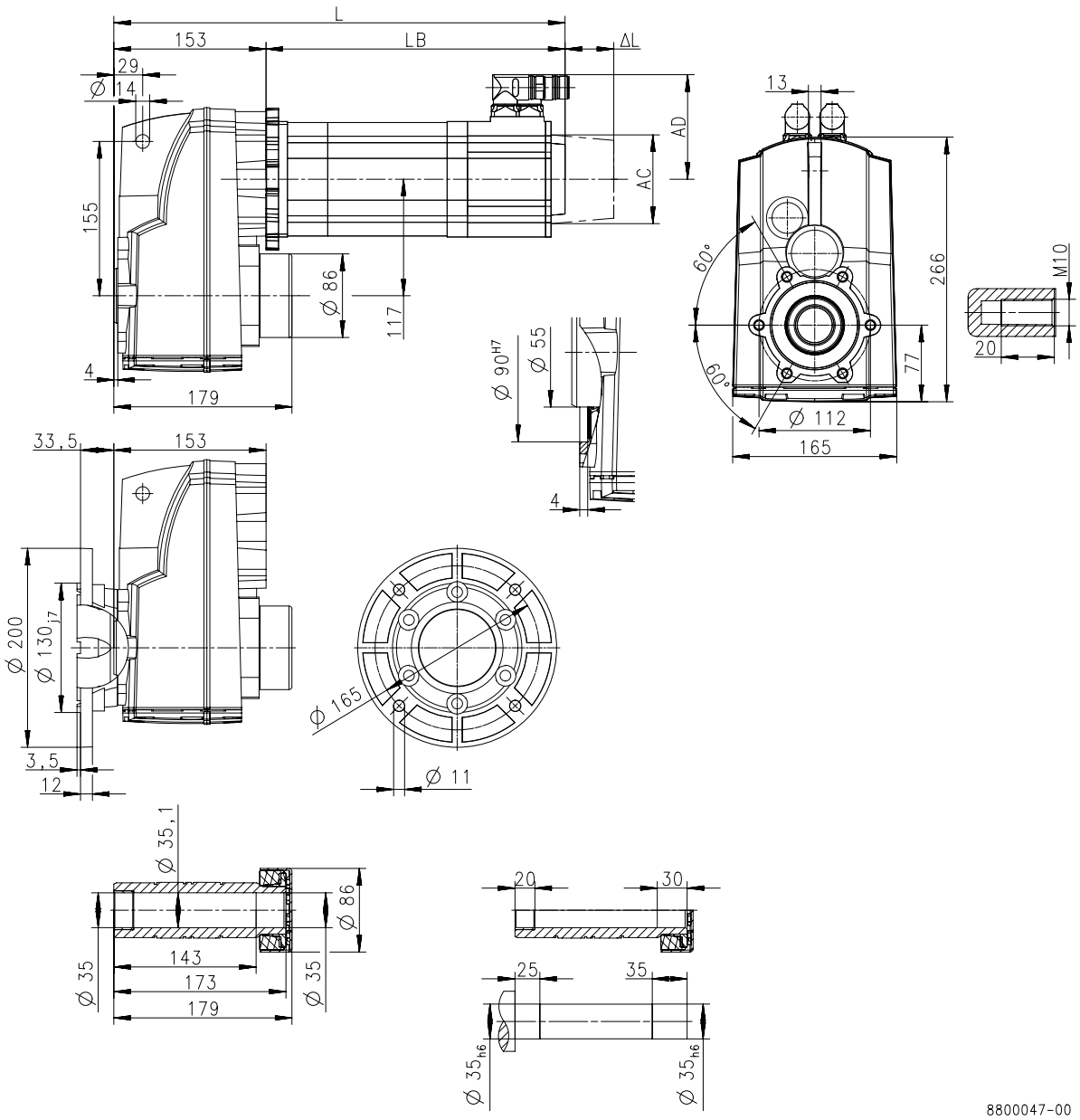

Product			MCA			
			10I40	13I41	14L20	17N23
Dimensions						
Total length	**L**	**[mm]**	412	421	471	510
Motor length	**LB**	**[mm]**	259	267.5	317.5	356.5
Length of motor options	**Δ L**	**[mm]**	78.5	89	88.5	89.2
Motor diameter	**AC**	**[mm]**	102	130	142	165
Distance motor/connection	**AD**	**[mm]**	90	102	109	117.5



Dimensions, self-ventilated motors

g500-S660

Dimensions with hollow shaft

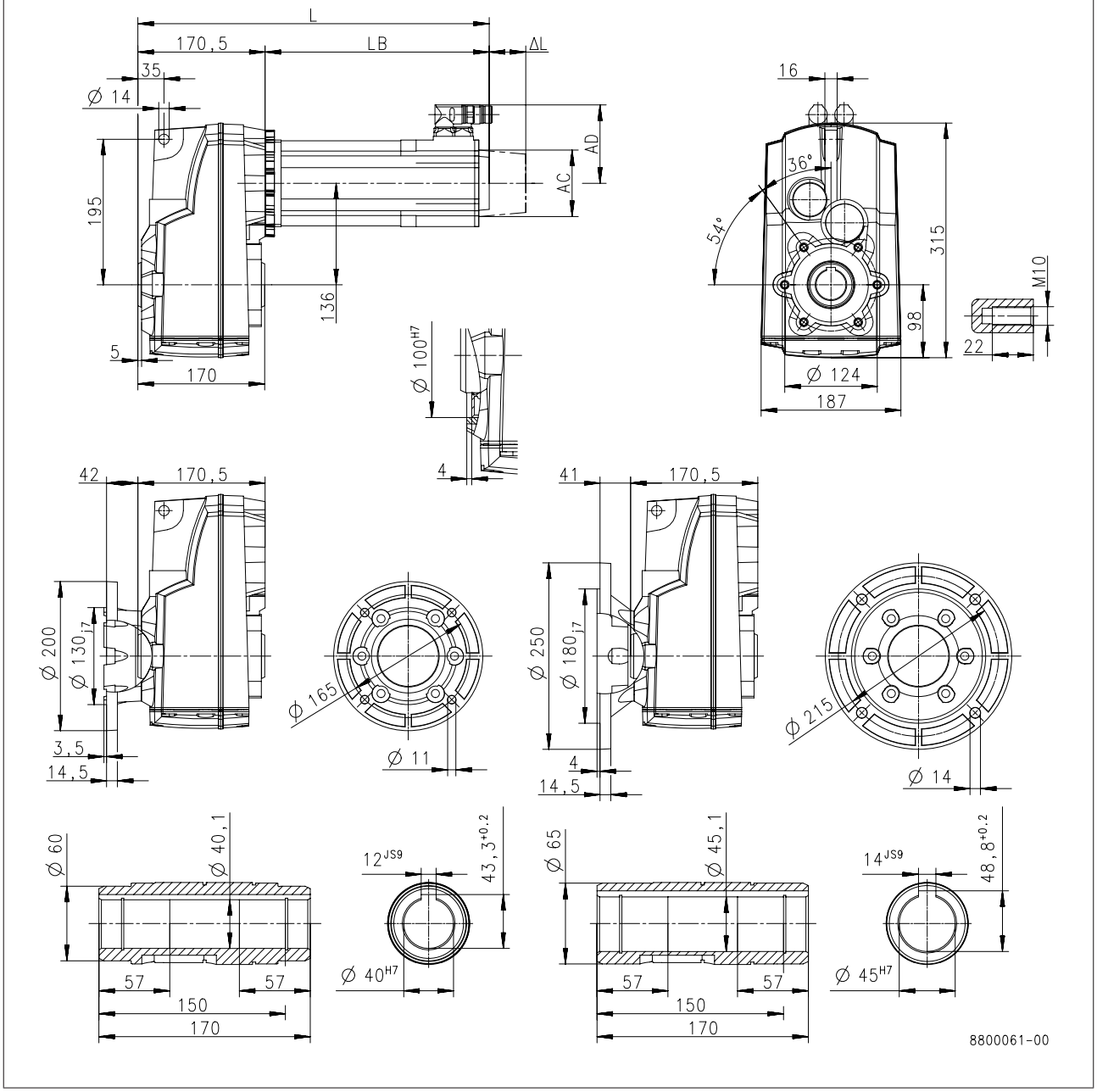

Product			MCA			
			10I40	13I41	14L20	17N23
Dimensions						
Total length	**L**	**[mm]**	430	438	488	527
Motor length	**LB**	**[mm]**	259	267.5	317.5	356.5
Length of motor options	**Δ L**	**[mm]**	78.5	89	88.5	89.2
Motor diameter	**AC**	**[mm]**	102	130	142	165
Distance motor/connection	**AD**	**[mm]**	90	102	109	117.5



Dimensions, self-ventilated motors

g500-S660

Dimensions with solid shaft

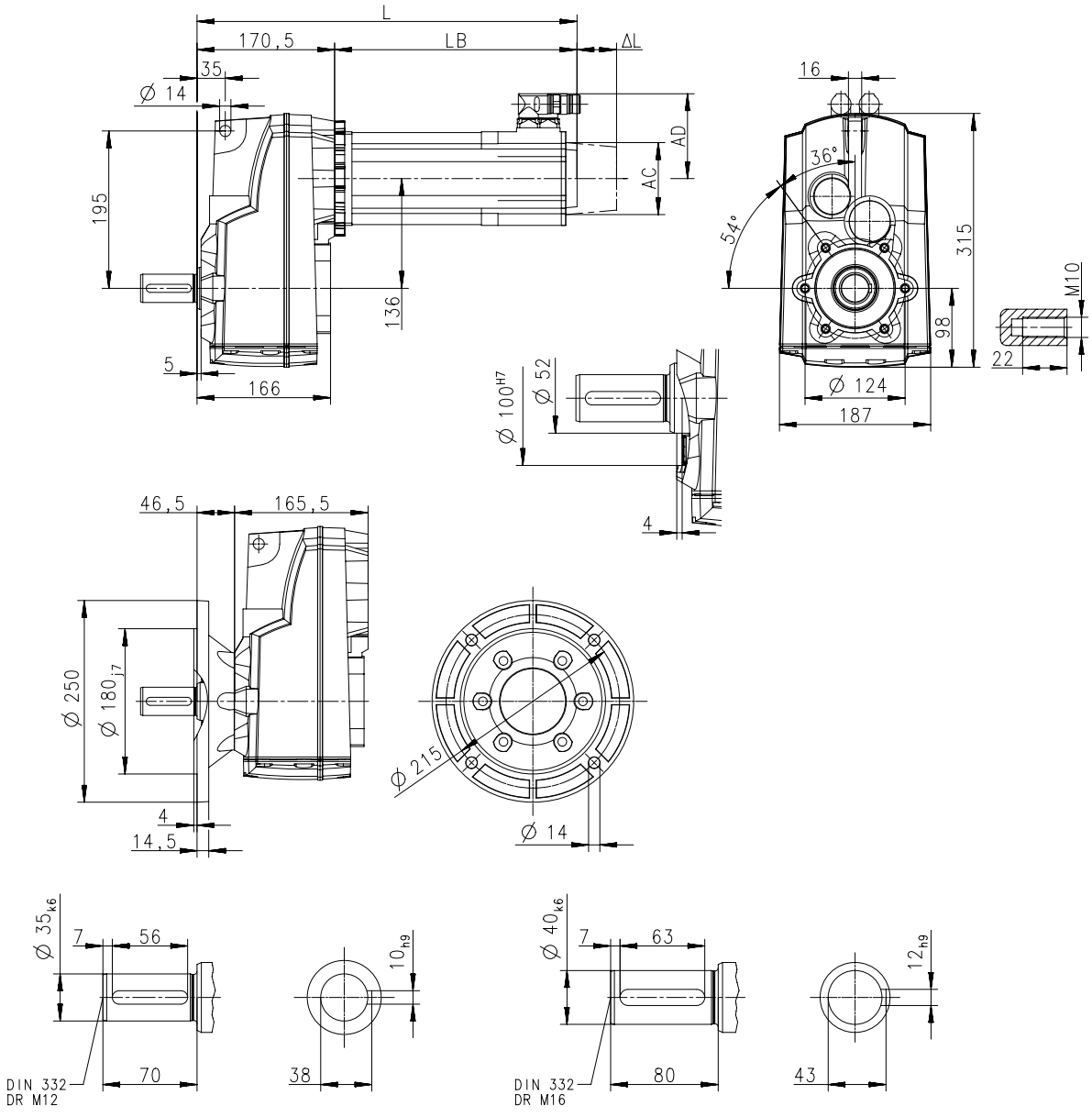

Product			MCA			
			10I40	13I41	14L20	17N23
Dimensions						
Total length	**L**	**[mm]**	430	438	488	527
Motor length	**LB**	**[mm]**	259	267.5	317.5	356.5
Length of motor options	**Δ L**	**[mm]**	78.5	89	88.5	89.2
Motor diameter	**AC**	**[mm]**	102	130	142	165
Distance motor/connection	**AD**	**[mm]**	90	102	109	117.5



Dimensions, self-ventilated motors

g500-S660

Dimensions with solid shaft and foot

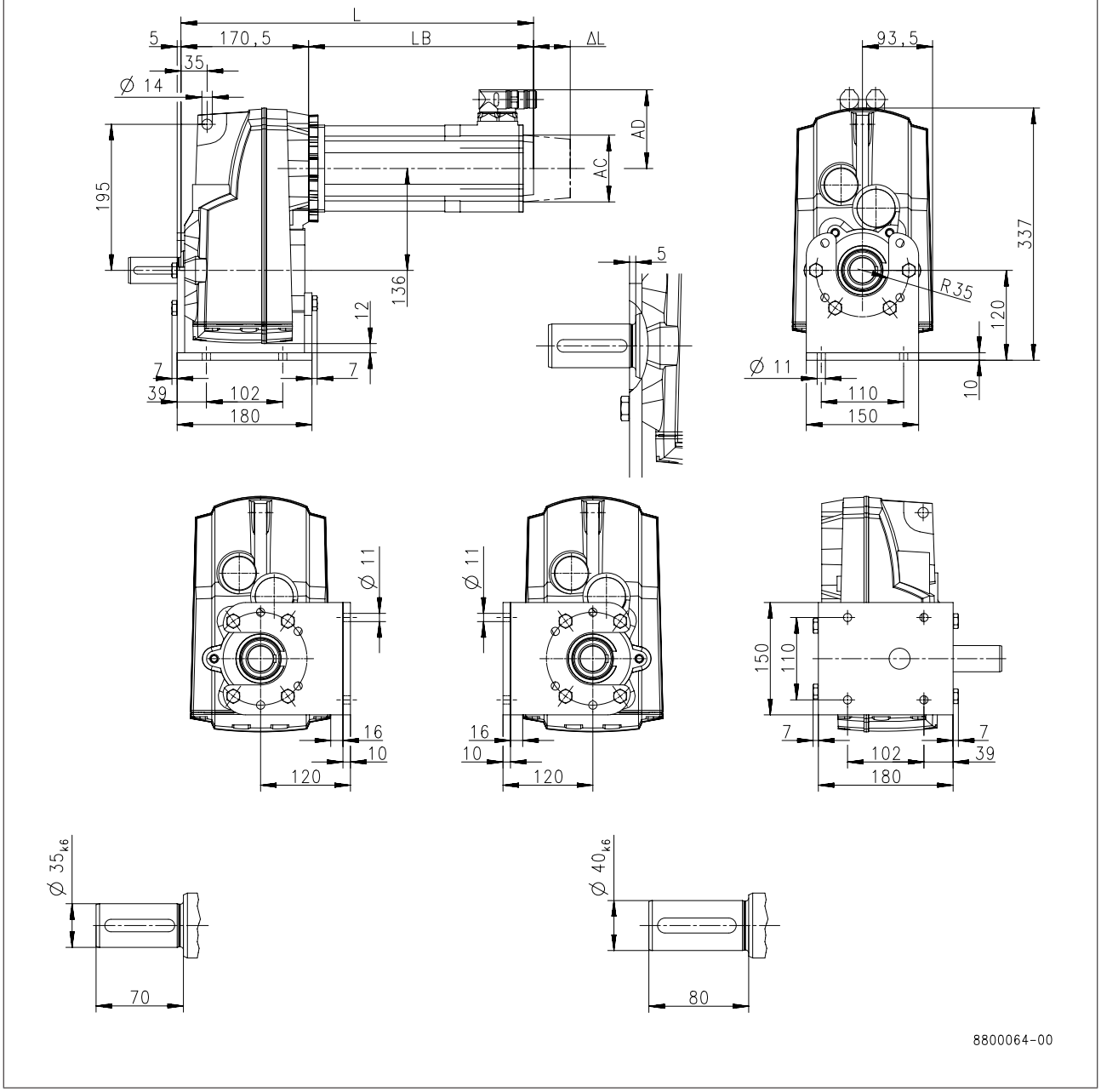

Product			MCA			
			10I40	13I41	14L20	17N23
Dimensions						
Total length	**L**	**[mm]**	430	438	488	527
Motor length	**LB**	**[mm]**	259	267.5	317.5	356.5
Length of motor options	**Δ L**	**[mm]**	78.5	89	88.5	89.2
Motor diameter	**AC**	**[mm]**	102	130	142	165
Distance motor/connection	**AD**	**[mm]**	90	102	109	117.5



Dimensions, self-ventilated motors

g500-S660

Dimensions with shrink disc

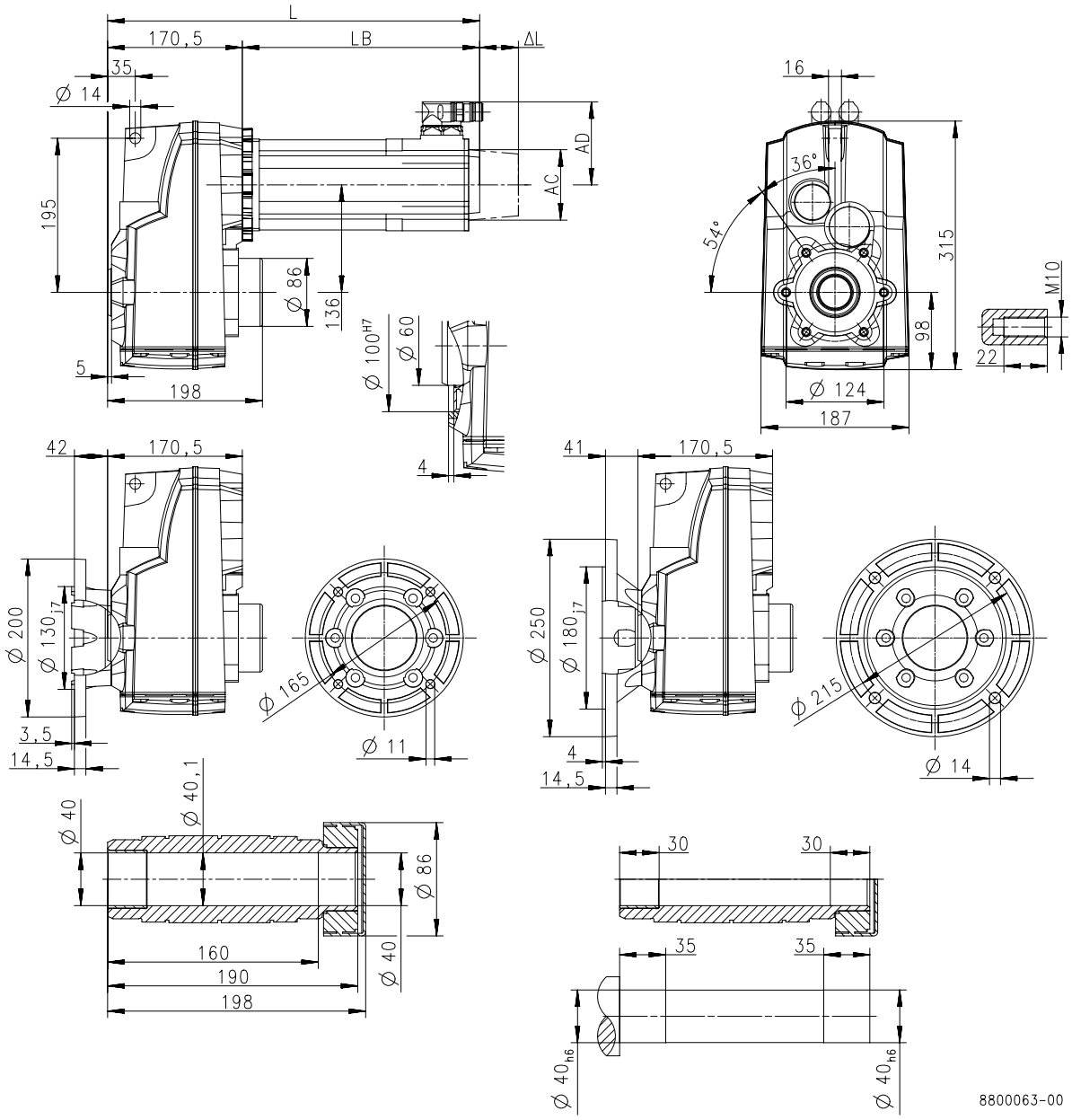

Product			MCA			
			10I40	13I41	14L20	17N23
Dimensions						
Total length	**L**	**[mm]**	430	438	488	527
Motor length	**LB**	**[mm]**	259	267.5	317.5	356.5
Length of motor options	**Δ L**	**[mm]**	78.5	89	88.5	89.2
Motor diameter	**AC**	**[mm]**	102	130	142	165
Distance motor/connection	**AD**	**[mm]**	90	102	109	117.5



Dimensions, forced ventilated motors

g500-S130

Dimensions with hollow shaft

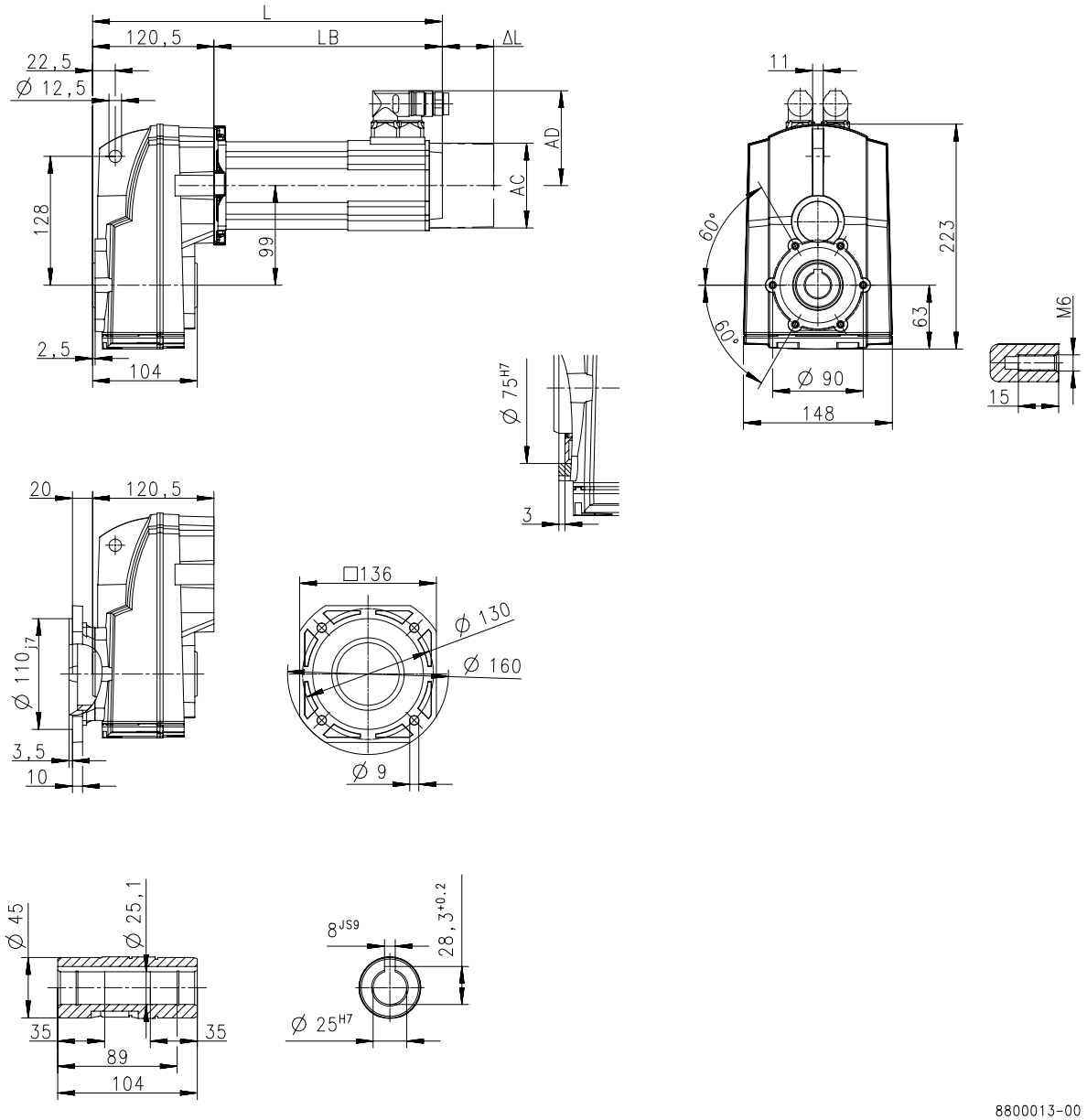

Product			MCA
			13I34
Dimensions			
Total length	**L**	**[mm]**	456
Motor length	**LB**	**[mm]**	335.5
Length of motor options	**Δ L**	**[mm]**	89.5
Motor diameter	**AC**	**[mm]**	130
Distance motor/connection	**AD**	**[mm]**	102



Dimensions, forced ventilated motors

g500-S130

Dimensions with solid shaft

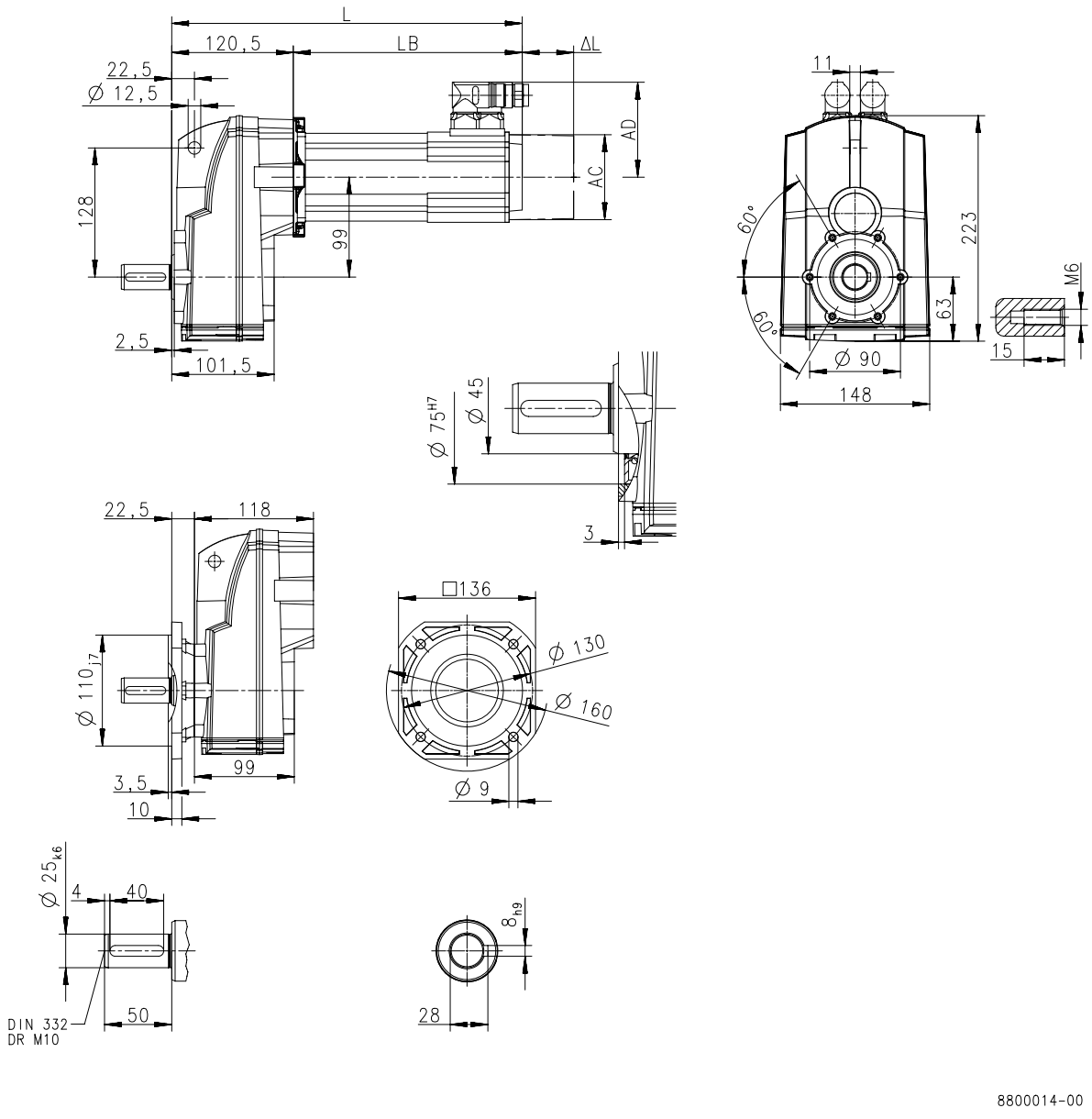

Product			MCA
			13I34
Dimensions			
Total length	**L**	**[mm]**	456
Motor length	**LB**	**[mm]**	335.5
Length of motor options	**Δ L**	**[mm]**	89.5
Motor diameter	**AC**	**[mm]**	130
Distance motor/connection	**AD**	**[mm]**	102



Dimensions, forced ventilated motors

g500-S130

Dimensions with solid shaft and foot

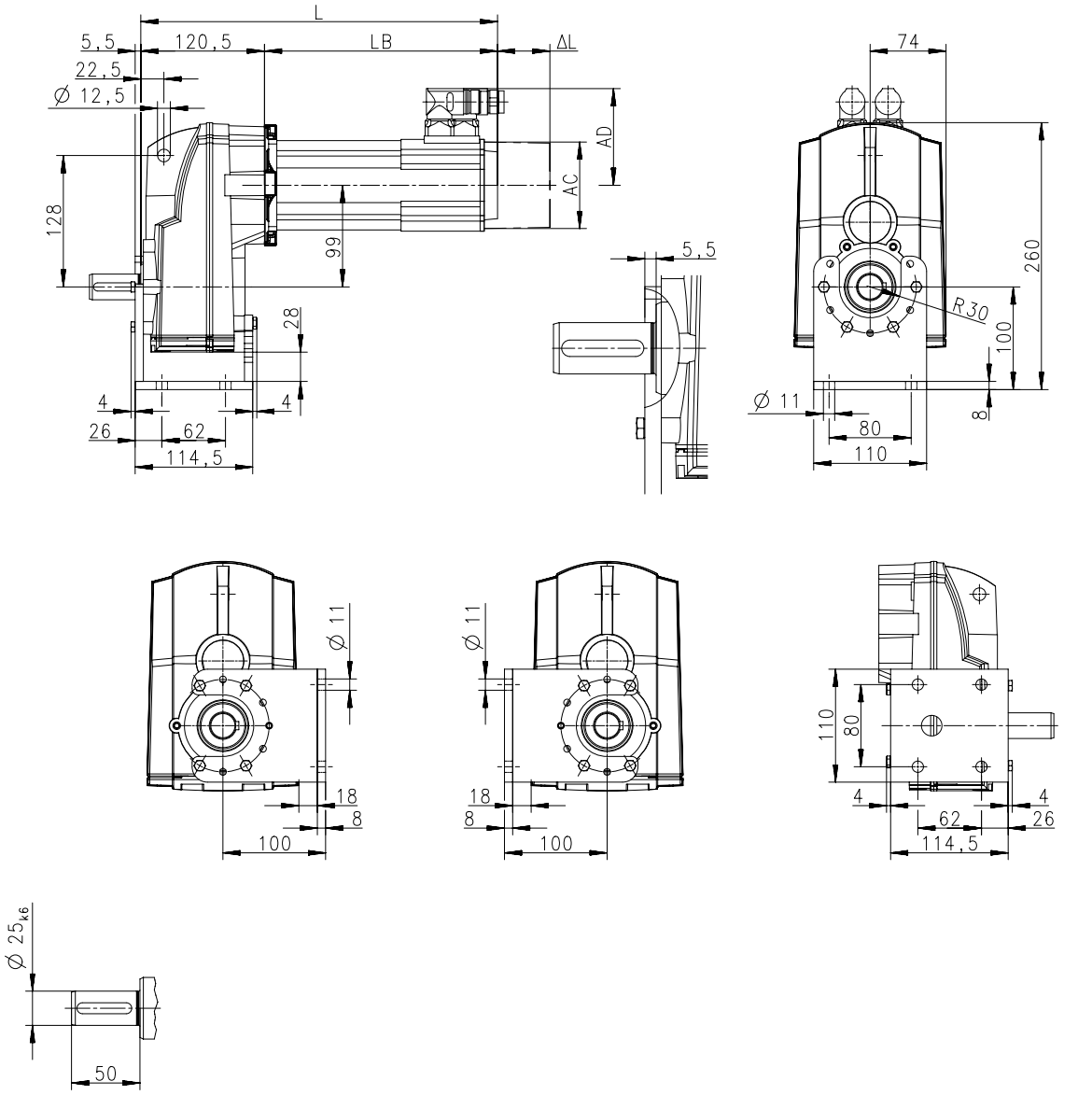

Product			MCA
			13I34
Dimensions			
Total length	**L**	**[mm]**	456
Motor length	**LB**	**[mm]**	335.5
Length of motor options	**Δ L**	**[mm]**	89.5
Motor diameter	**AC**	**[mm]**	130
Distance motor/connection	**AD**	**[mm]**	102



Dimensions, forced ventilated motors

g500-S130

Dimensions with shrink disc

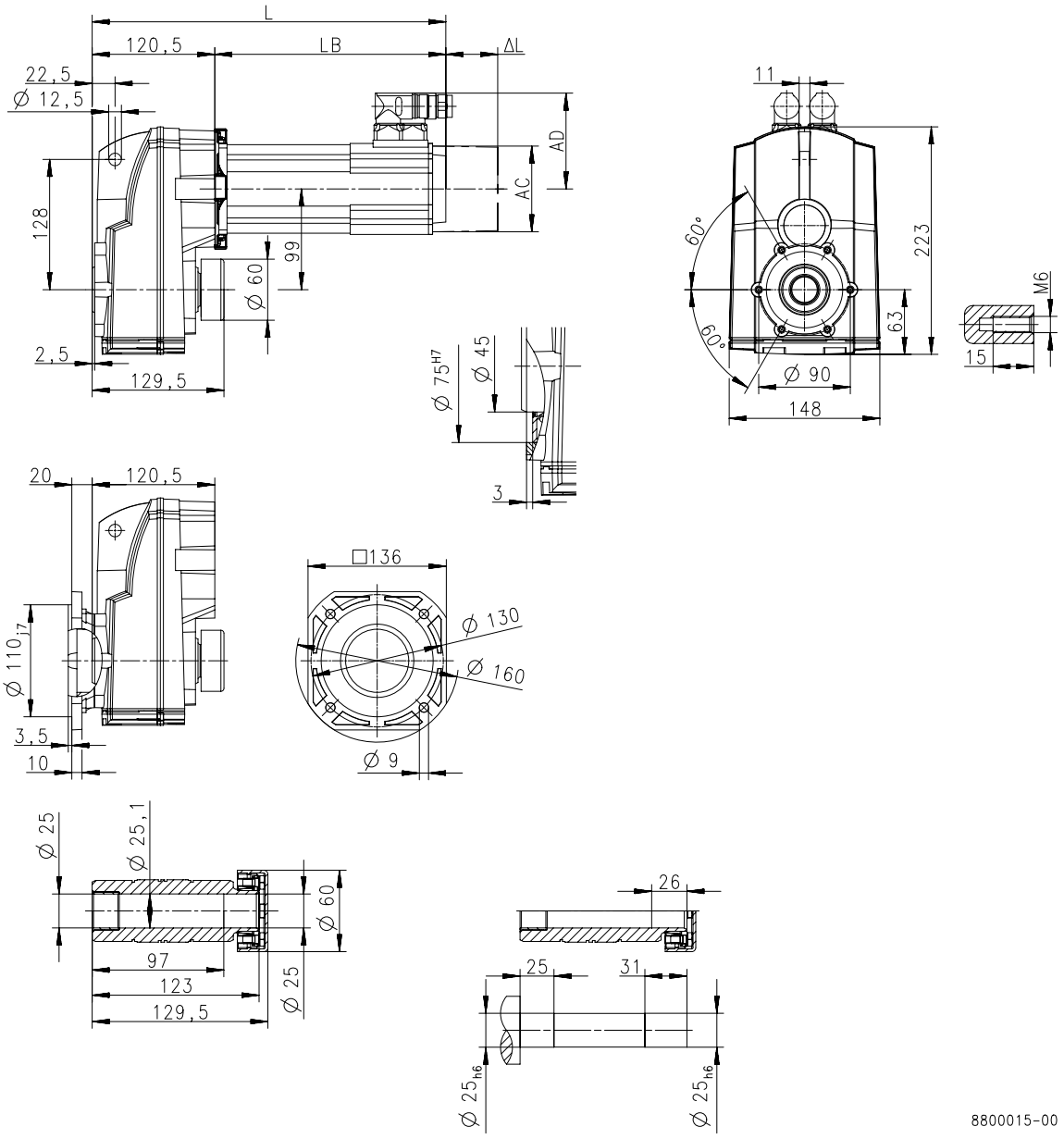

Product			MCA
			13I34
Dimensions			
Total length	**L**	**[mm]**	456
Motor length	**LB**	**[mm]**	335.5
Length of motor options	**Δ L**	**[mm]**	89.5
Motor diameter	**AC**	**[mm]**	130
Distance motor/connection	**AD**	**[mm]**	102



Dimensions, forced ventilated motors

g500-S220

Dimensions with hollow shaft

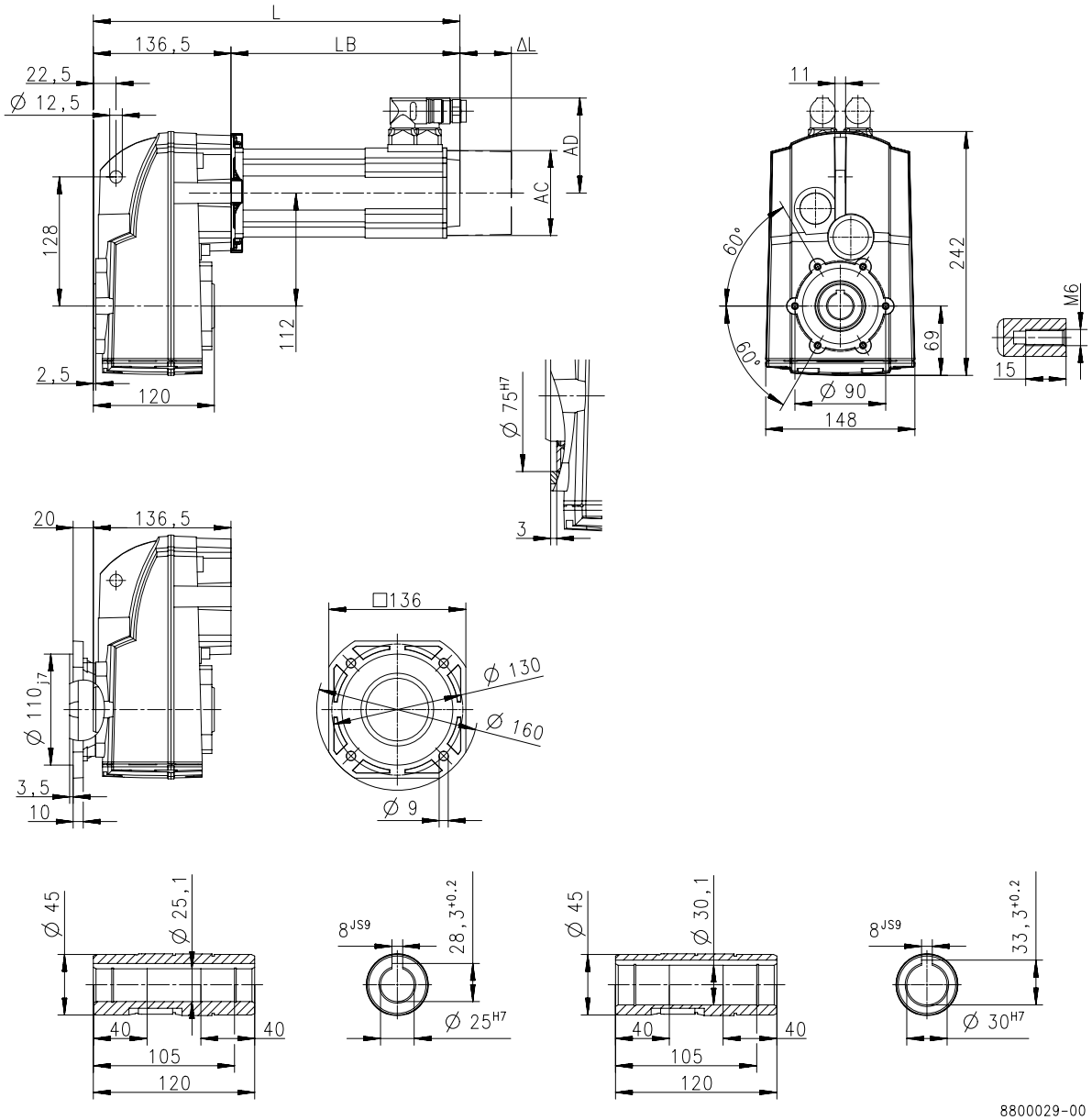

Product			MCA	
			13I34	14L16
Dimensions				
Total length	**L**	**[mm]**	472	516
Motor length	**LB**	**[mm]**	335.5	379.5
Length of motor options	**Δ L**	**[mm]**	89.5	88.5
Motor diameter	**AC**	**[mm]**	130	142
Distance motor/connection	**AD**	**[mm]**	102	109



Dimensions, forced ventilated motors

g500-S220

Dimensions with solid shaft

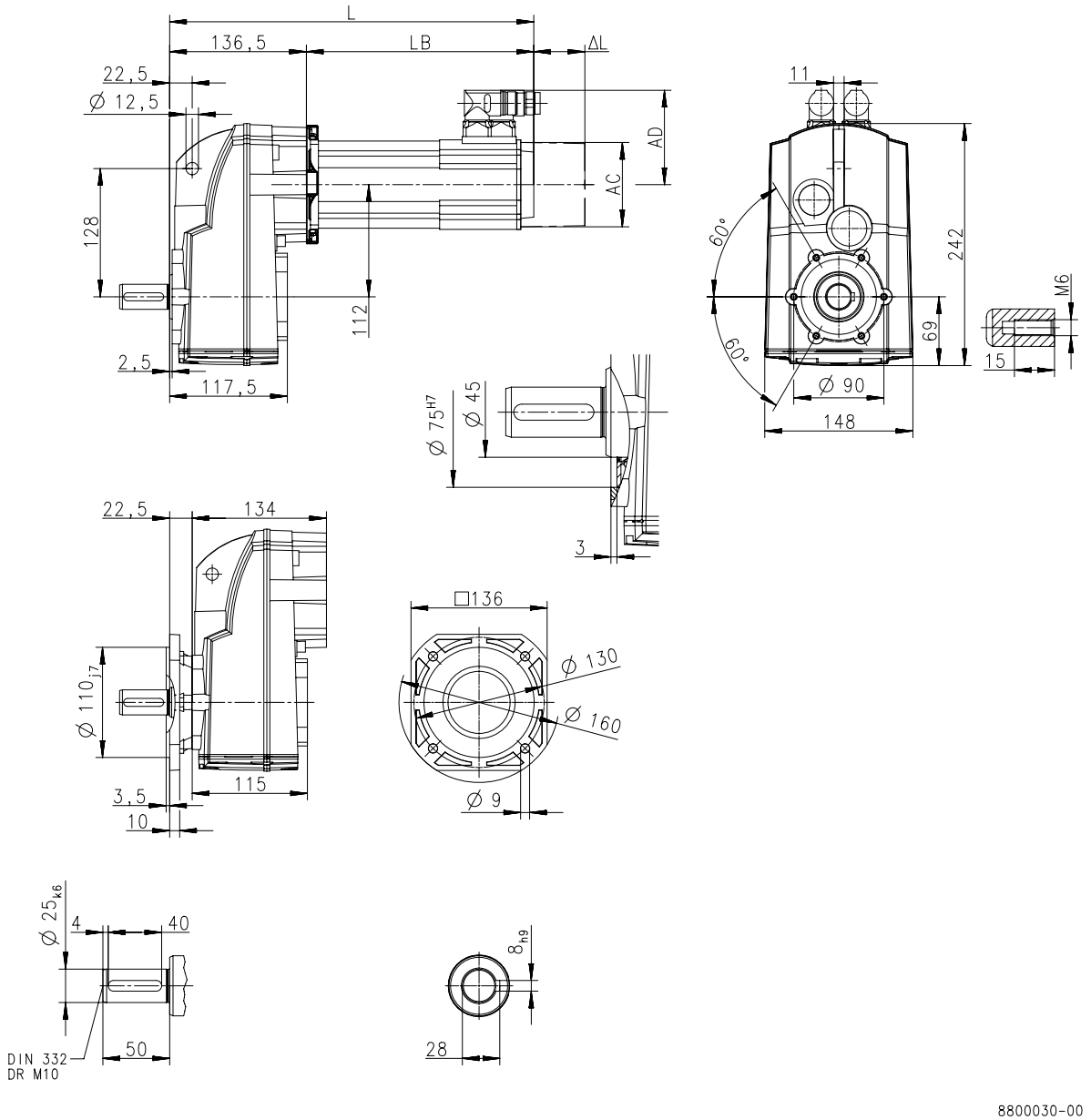

Product			MCA	
			13I34	14L16
Dimensions				
Total length	**L**	**[mm]**	472	516
Motor length	**LB**	**[mm]**	335.5	379.5
Length of motor options	**Δ L**	**[mm]**	89.5	88.5
Motor diameter	**AC**	**[mm]**	130	142
Distance motor/connection	**AD**	**[mm]**	102	109



Dimensions, forced ventilated motors

g500-S220

Dimensions with solid shaft and foot

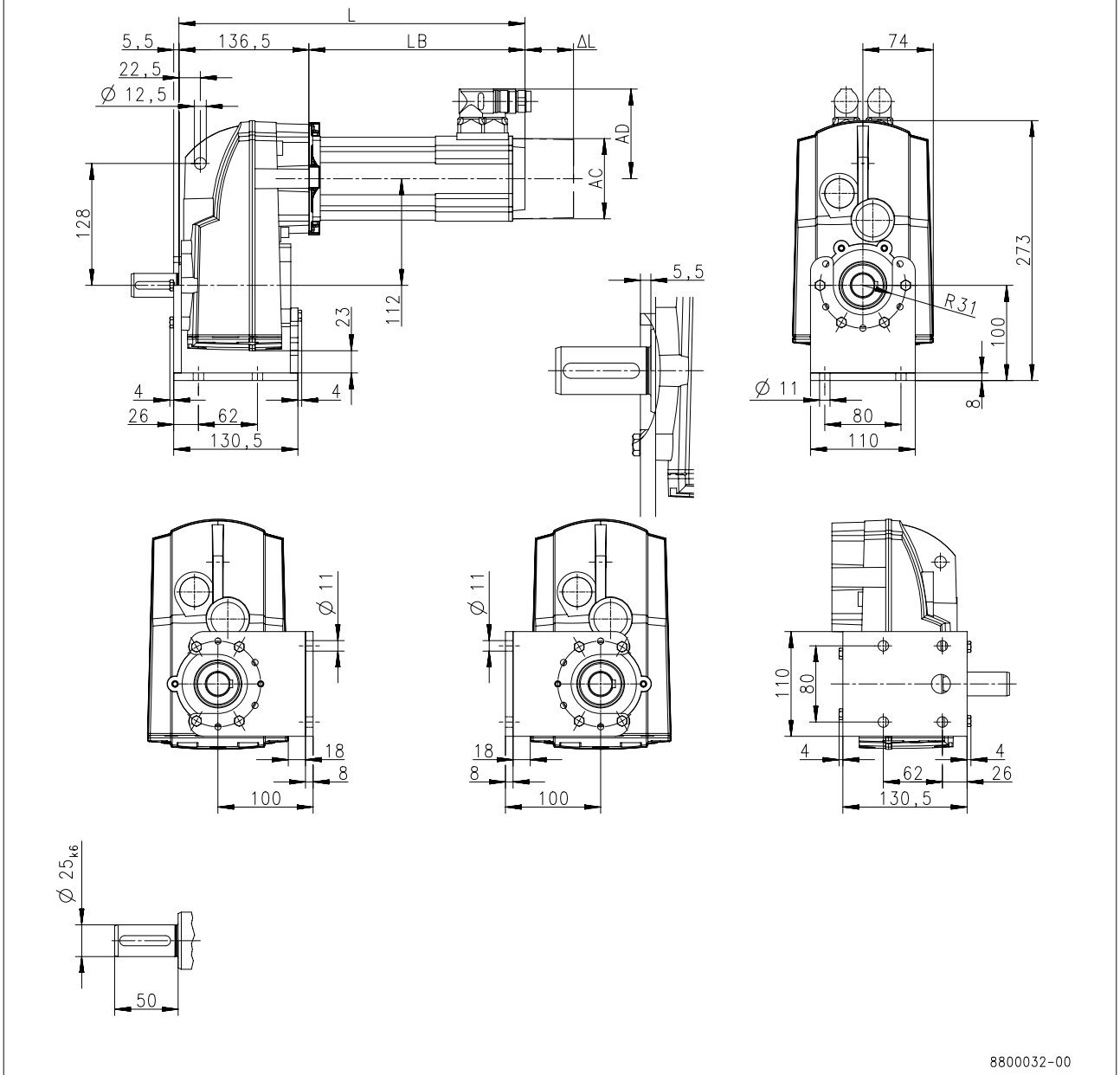

Product			MCA	
			13I34	14L16
Dimensions				
Total length	**L**	**[mm]**	472	516
Motor length	**LB**	**[mm]**	335.5	379.5
Length of motor options	**Δ L**	**[mm]**	89.5	88.5
Motor diameter	**AC**	**[mm]**	130	142
Distance motor/connection	**AD**	**[mm]**	102	109



Dimensions, forced ventilated motors

g500-S220

Dimensions with shrink disc

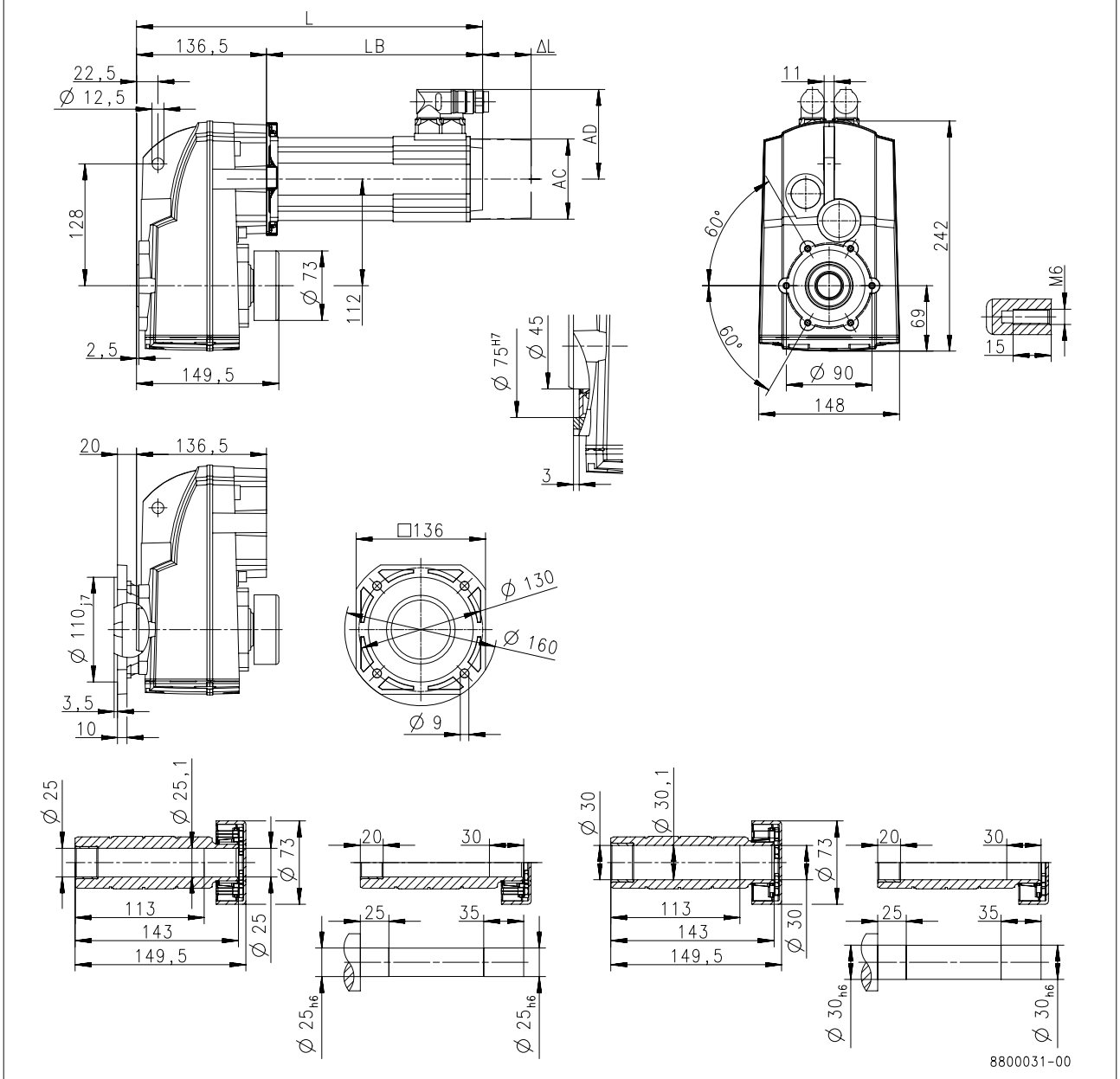

Product			MCA	
			13I34	14L16
Dimensions				
Total length	**L**	**[mm]**	472	516
Motor length	**LB**	**[mm]**	335.5	379.5
Length of motor options	**Δ L**	**[mm]**	89.5	88.5
Motor diameter	**AC**	**[mm]**	130	142
Distance motor/connection	**AD**	**[mm]**	102	109



Dimensions, forced ventilated motors

g500-S400

Dimensions with hollow shaft

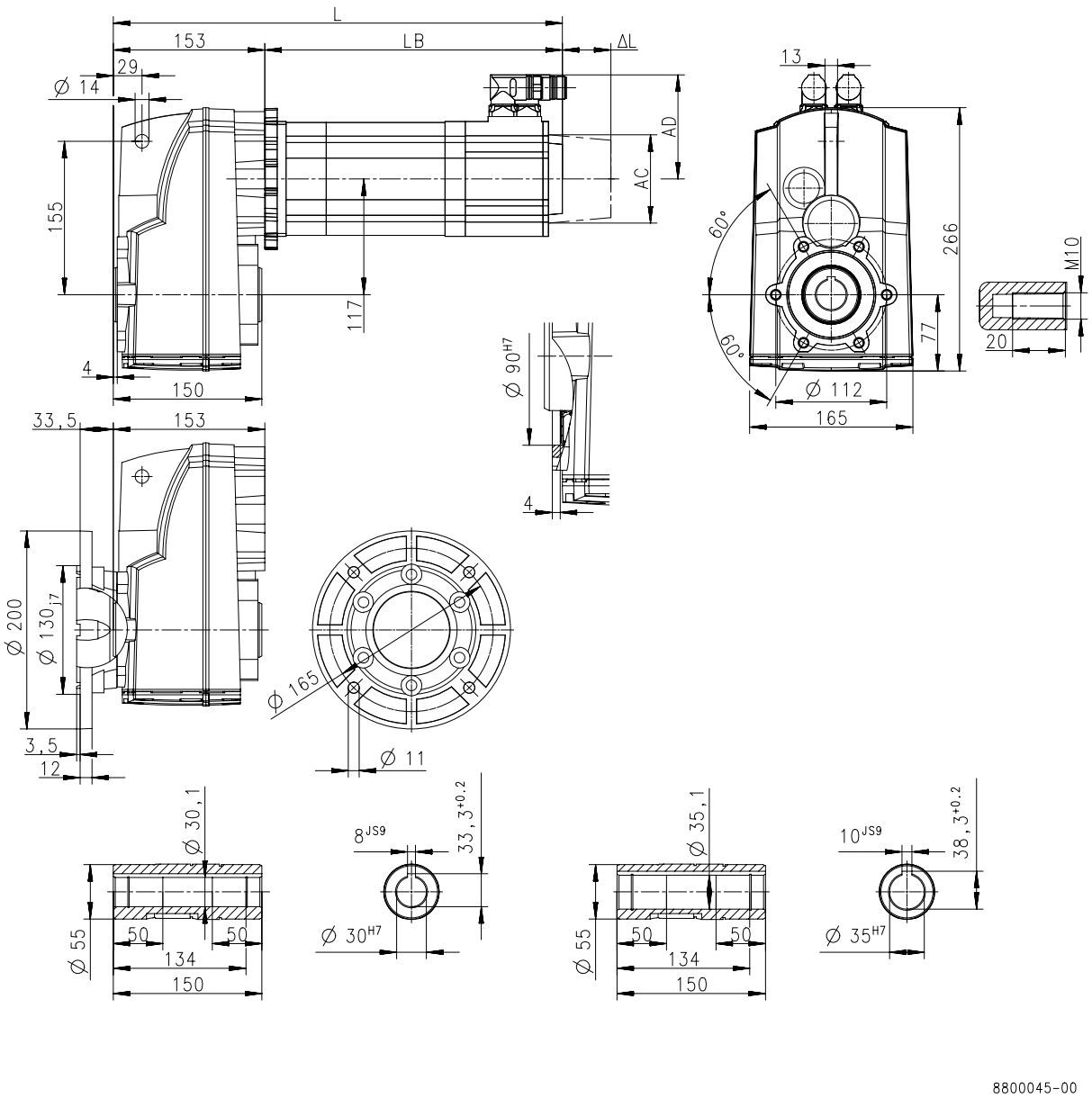

Product			MCA			
			13I34	14L16	14L35	17N17
Dimensions						
Total length	**L**	**[mm]**	489	533		596
Motor length	**LB**	**[mm]**	335.5	379.5		442.5
Length of motor options	**Δ L**	**[mm]**	89.5	88.5		89
Motor diameter	**AC**	**[mm]**	130	142		165
Distance motor/connection	**AD**	**[mm]**	102	109		117.5



Dimensions, forced ventilated motors

g500-S400

Dimensions with solid shaft

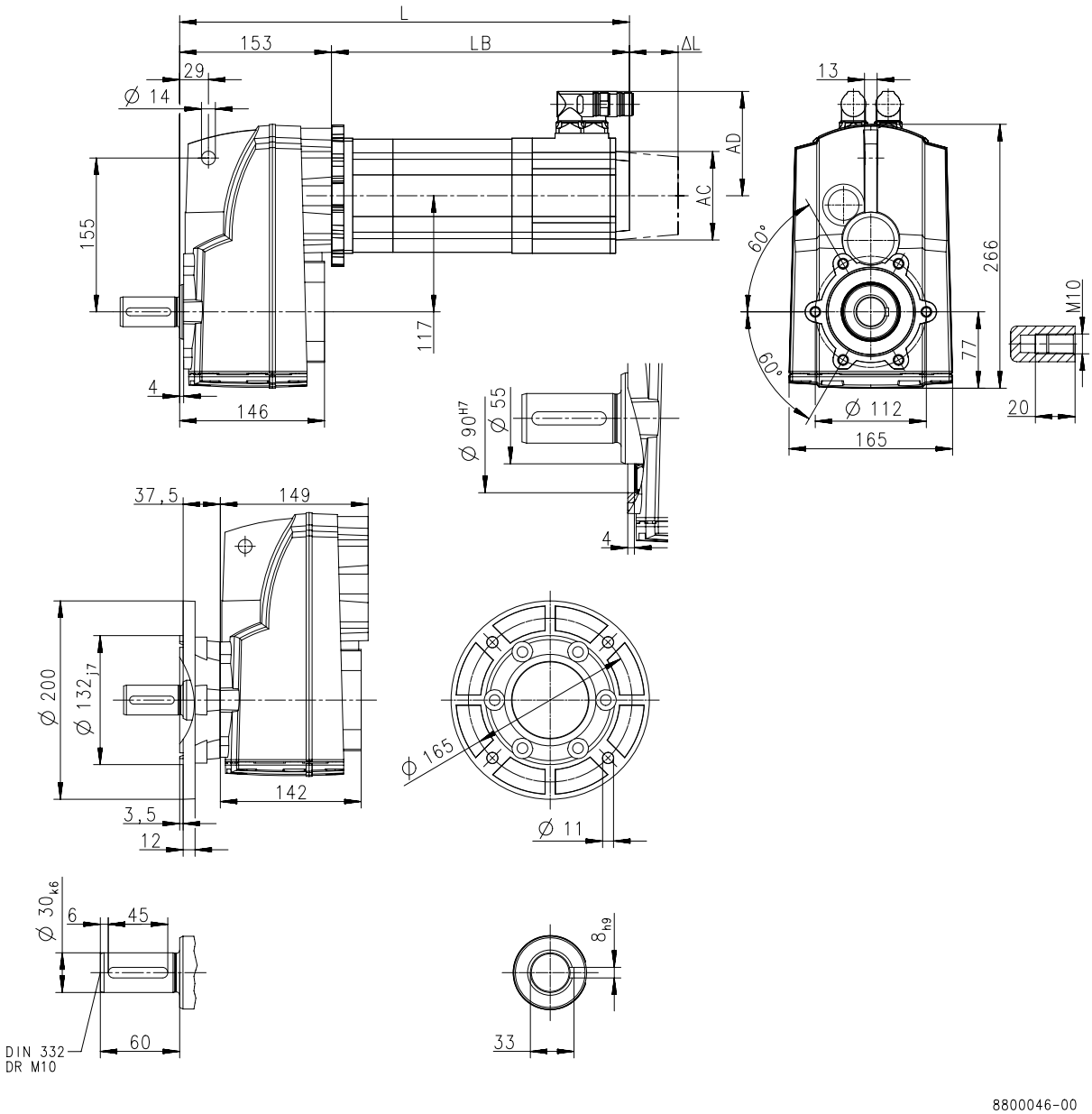

Product			MCA			
			13I34	14L16	14L35	17N17
Dimensions						
Total length	**L**	**[mm]**	489	533		596
Motor length	**LB**	**[mm]**	335.5	379.5		442.5
Length of motor options	**Δ L**	**[mm]**	89.5	88.5		89
Motor diameter	**AC**	**[mm]**	130	142		165
Distance motor/connection	**AD**	**[mm]**	102	109		117.5



Dimensions, forced ventilated motors

g500-S400

Dimensions with solid shaft and foot

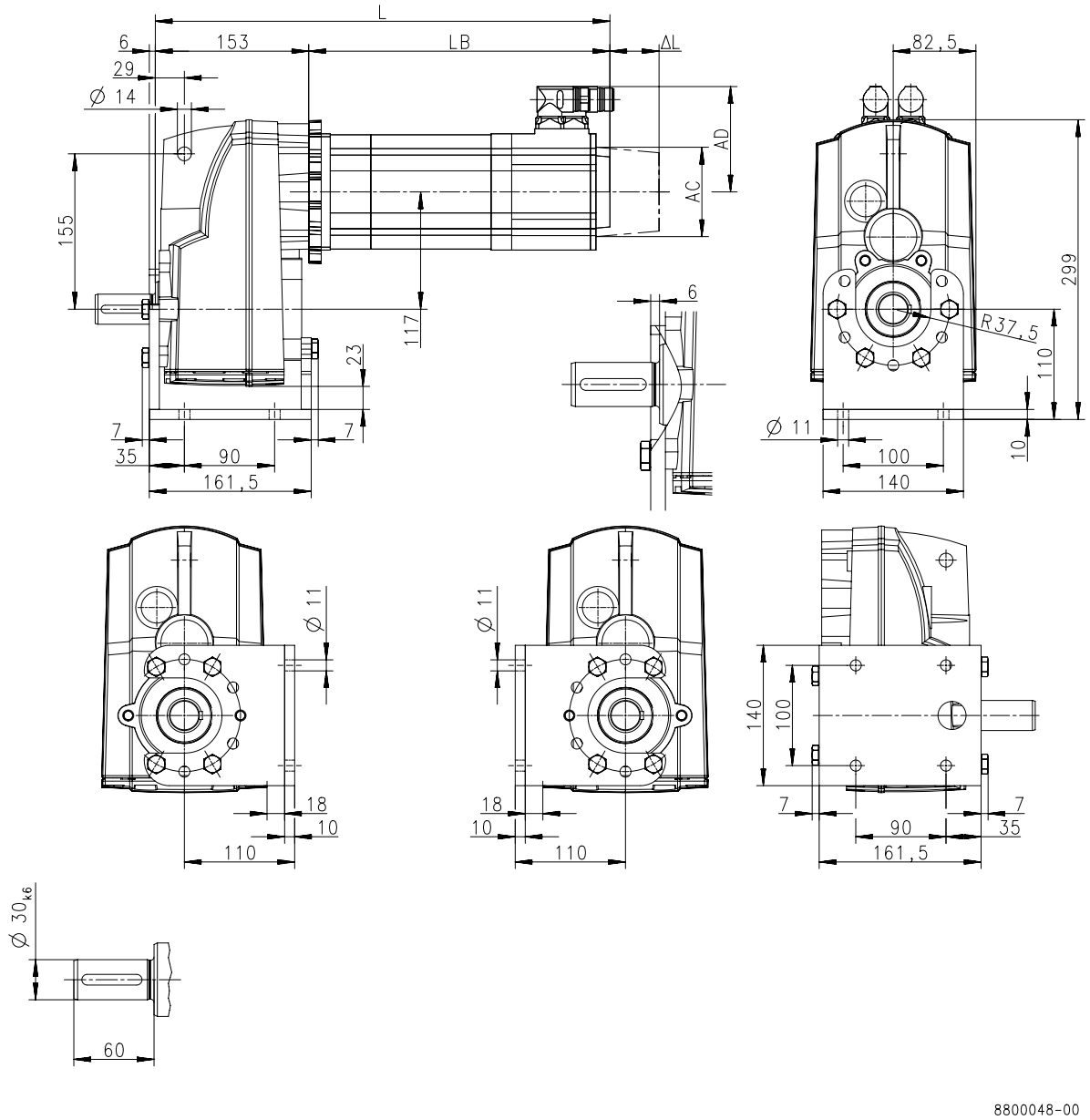

Product			MCA			
			13I34	14L16	14L35	17N17
Dimensions						
Total length	**L**	**[mm]**	489	533		596
Motor length	**LB**	**[mm]**	335.5	379.5		442.5
Length of motor options	**Δ L**	**[mm]**	89.5	88.5		89
Motor diameter	**AC**	**[mm]**	130	142		165
Distance motor/connection	**AD**	**[mm]**	102	109		117.5



Dimensions, forced ventilated motors

g500-S400

Dimensions with shrink disc

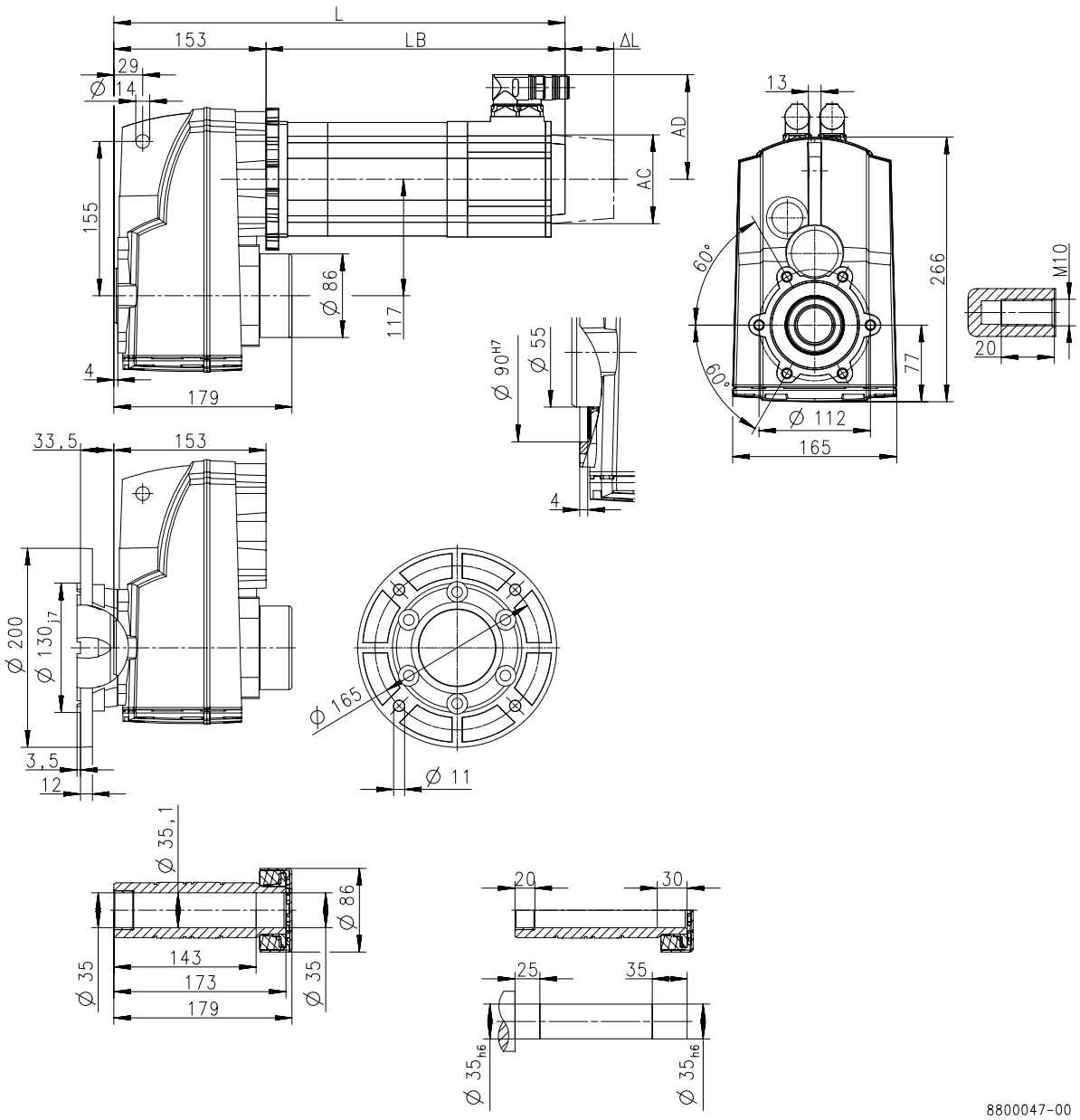

Product			MCA			
			13I34	14L16	14L35	17N17
Dimensions						
Total length	**L**	**[mm]**	489	533		596
Motor length	**LB**	**[mm]**	335.5	379.5		442.5
Length of motor options	**Δ L**	**[mm]**	89.5	88.5		89
Motor diameter	**AC**	**[mm]**	130	142		165
Distance motor/connection	**AD**	**[mm]**	102	109		117.5



Dimensions, forced ventilated motors

g500-S660

Dimensions with hollow shaft

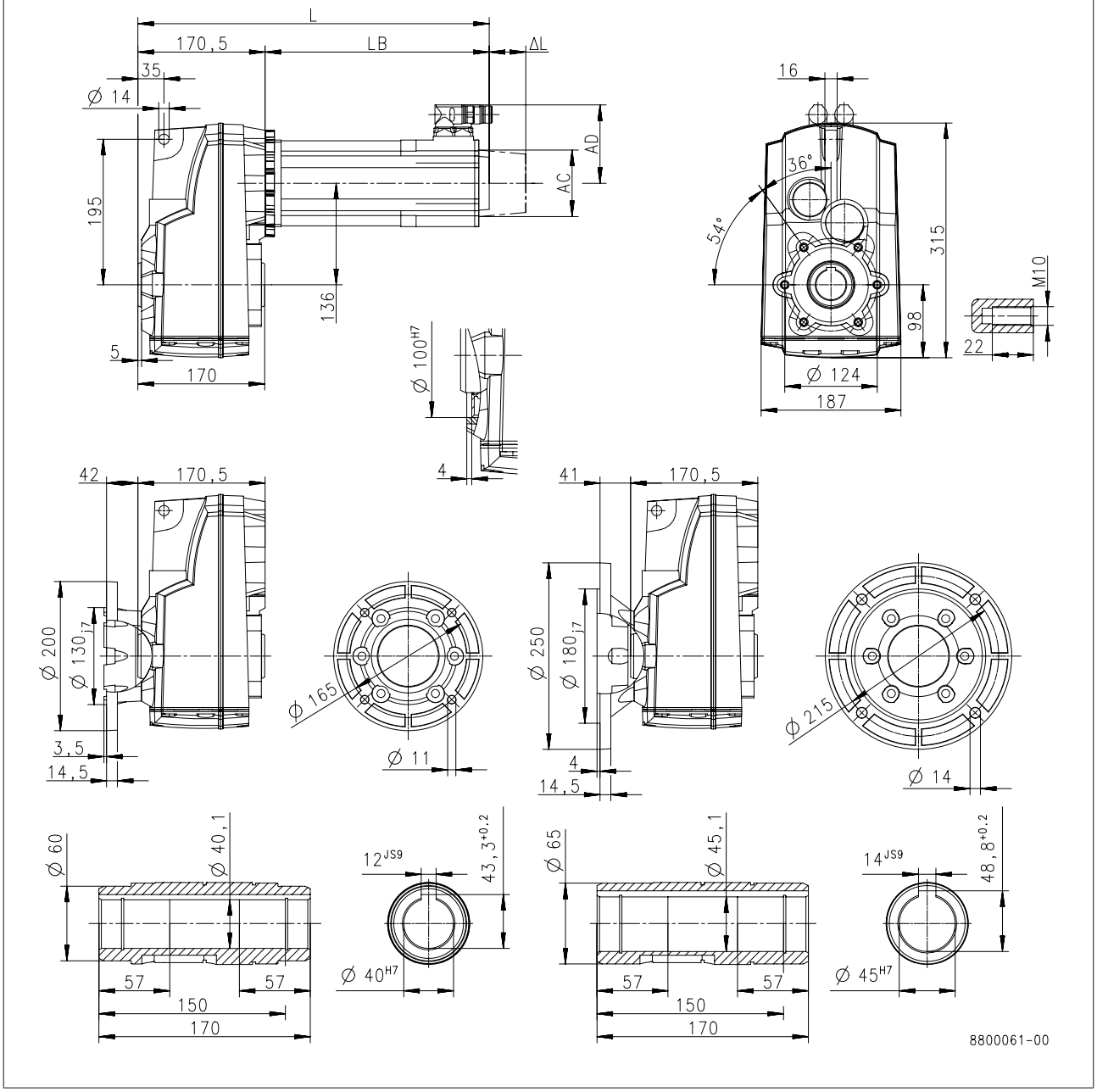

Product			MCA			
			13I34	14L16	14L35	17N17
Dimensions						
Total length	**L**	**[mm]**	506	550		613
Motor length	**LB**	**[mm]**	335.5	379.5		442.5
Length of motor options	**Δ L**	**[mm]**	89.5	88.5		89
Motor diameter	**AC**	**[mm]**	130	142		165
Distance motor/connection	**AD**	**[mm]**	102	109		117.5



Dimensions, forced ventilated motors

g500-S660

Dimensions with solid shaft

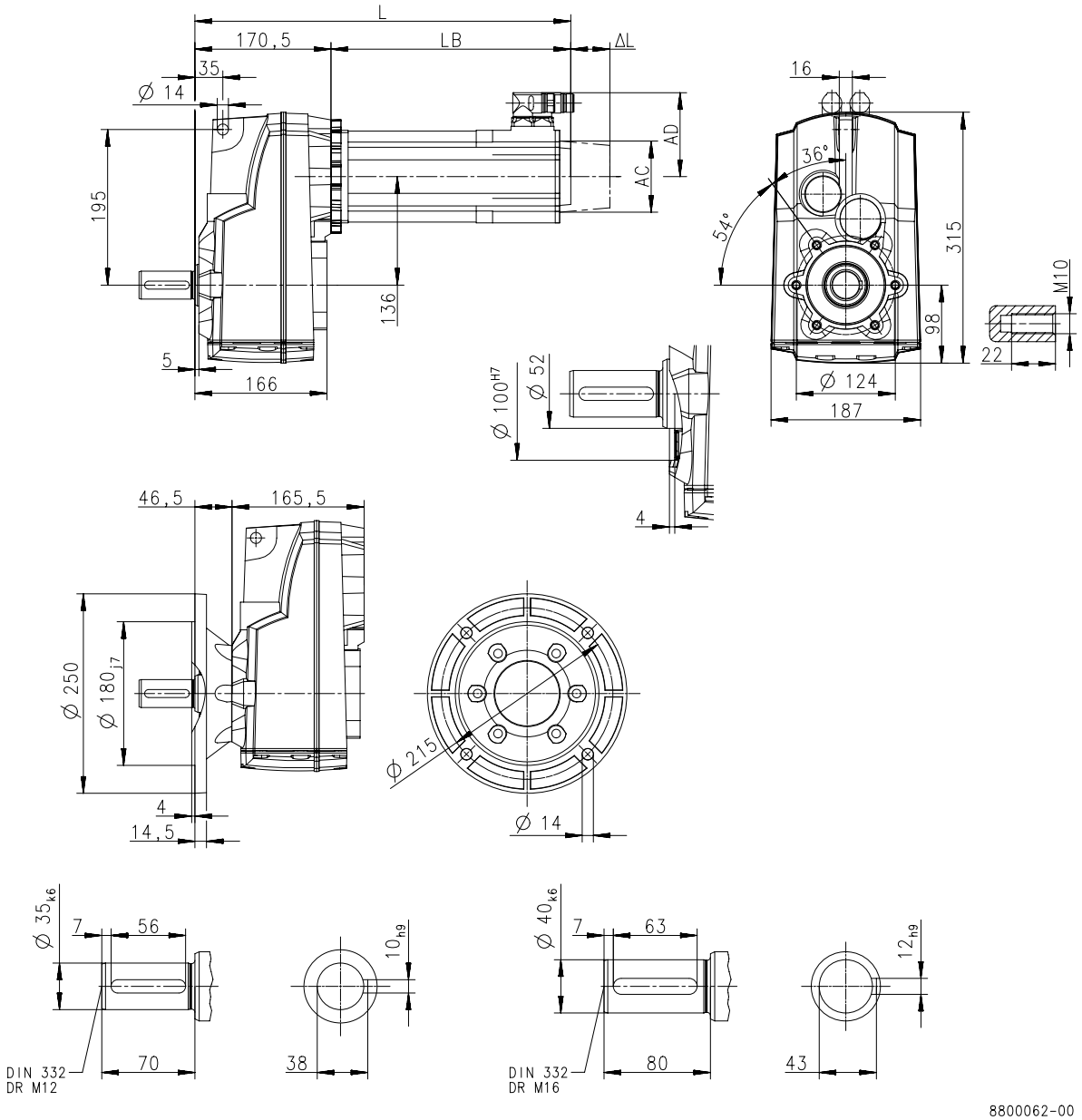

Product			MCA			
			13I34	14L16	14L35	17N17
Dimensions						
Total length	**L**	**[mm]**	506	550		613
Motor length	**LB**	**[mm]**	335.5	379.5		442.5
Length of motor options	**Δ L**	**[mm]**	89.5	88.5		89
Motor diameter	**AC**	**[mm]**	130	142		165
Distance motor/connection	**AD**	**[mm]**	102	109		117.5



Dimensions, forced ventilated motors

g500-S660

Dimensions with solid shaft and foot

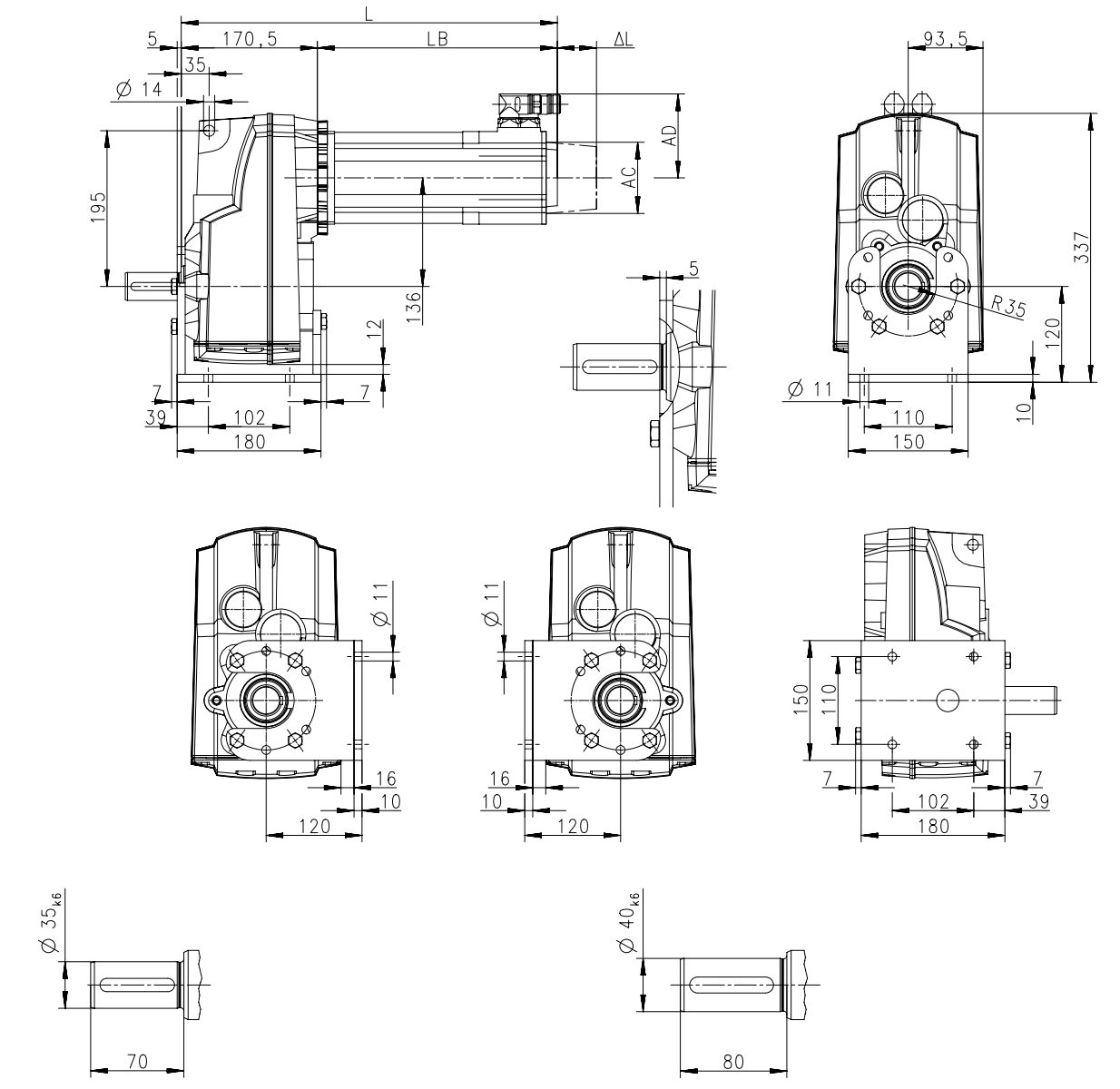

Product			MCA			
			13I34	14L16	14L35	17N17
Dimensions						
Total length	**L**	**[mm]**	506	550		613
Motor length	**LB**	**[mm]**	335.5	379.5		442.5
Length of motor options	**Δ L**	**[mm]**	89.5	88.5		89
Motor diameter	**AC**	**[mm]**	130	142		165
Distance motor/connection	**AD**	**[mm]**	102	109		117.5



Dimensions, forced ventilated motors

g500-S660

Dimensions with shrink disc

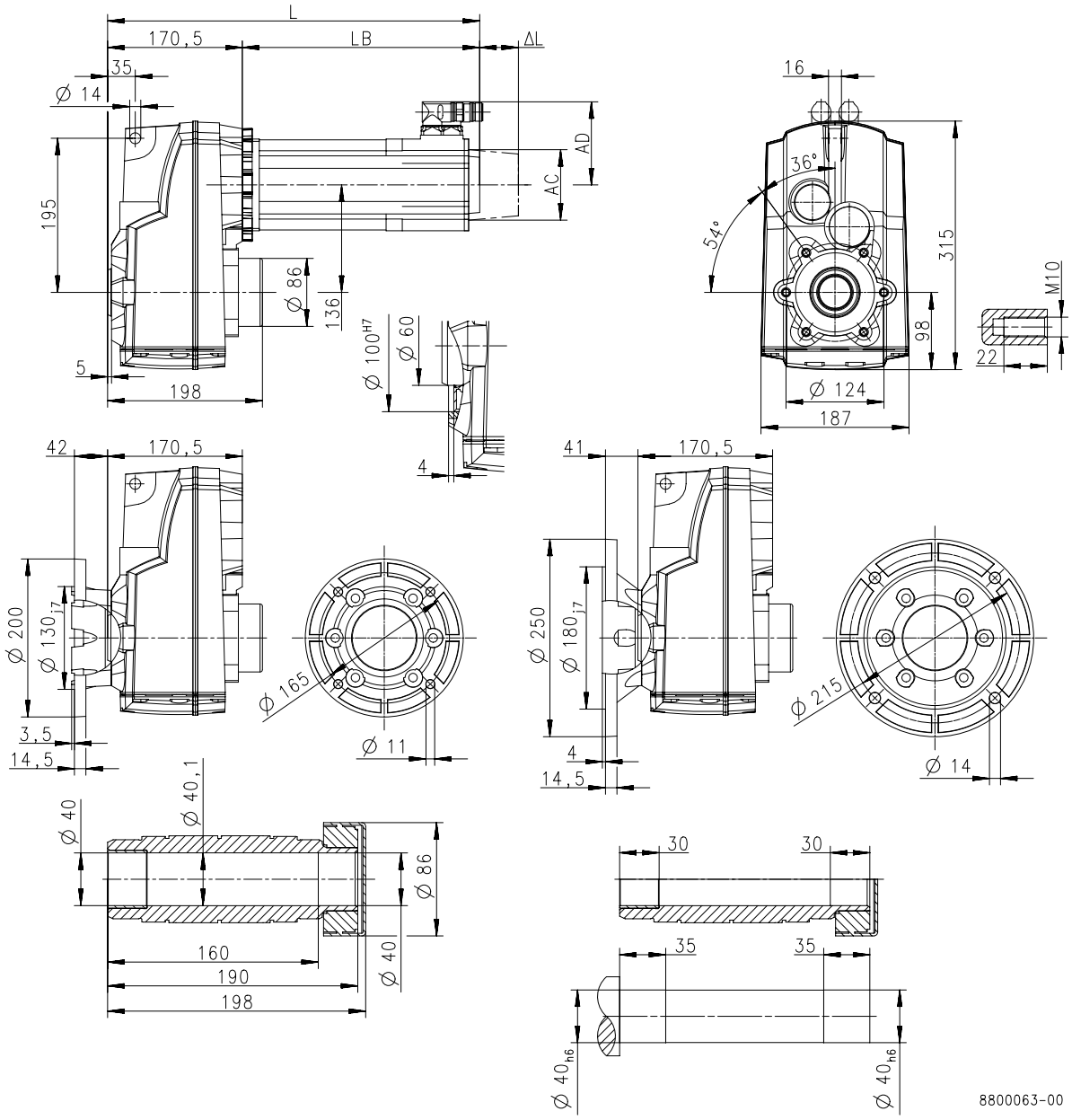

Product			MCA			
			13I34	14L16	14L35	17N17
Dimensions						
Total length	**L**	**[mm]**	506	550		613
Motor length	**LB**	**[mm]**	335.5	379.5		442.5
Length of motor options	**Δ L**	**[mm]**	89.5	88.5		89
Motor diameter	**AC**	**[mm]**	130	142		165
Distance motor/connection	**AD**	**[mm]**	102	109		117.5



Weights, self-ventilated motors

2-stage gearboxes

				MCA			
				10I40	13I41	14L20	17N23
g500	-S130	m	[kg]	11	15		
	-S220	m	[kg]	13	17	21	
	-S400	m	[kg]	16	20	24	32
	-S660	m	[kg]	20	24	29	37

3-stage gearboxes

				MCA	
				10I40	13I41
g500	-S220	m	[kg]	13	
	-S400	m	[kg]	16	
	-S660	m	[kg]	20	25



Weights, forced ventilated motors

2-stage gearboxes

				MCA			
				13I34	14L16	14L35	17N17
g500	-S130	m	[kg]	17			
	-S220	m	[kg]	18	23		
	-S400	m	[kg]	22	26		35
	-S660	m	[kg]	26	31		39

3-stage gearboxes

				MCA
				13I34
g500	-S660	m	[kg]	26



Surface and corrosion protection

For optimum protection of geared motors against ambient conditions, the surface and corrosion protection system (OKS) offers tailor-made solutions.

Various surface coatings combined with other protective measures ensure that the geared motors operate reliably even at high air humidity, in outdoor installations or in the presence of atmospheric impurities. Any colour from the RAL Classic collection can be chosen for the top coat. The geared motors are also available unpainted (no surface and corrosion protection).

Surface and corrosion protection	Applications	Measures
OKS-G (primed)	• Dependent on subsequent top coat applied	• 2K PUR priming coat (grey) • Zinc-coated screws • Rust-free breather elements Optional measures • Stainless steel nameplate
OKS-S (small)	• Standard applications • Internal installation in heated buildings • Air humidity up to 90%	• Surface coating as per corrosivity category C1 (in line with EN 12944-2) • Zinc-coated screws • Rust-free breather elements Optional measures • Stainless steel nameplate
OKS-M (medium)	• Internal installation in non-heated buildings • Covered, protected external installation • Air humidity up to 95%	• Surface coating as per corrosivity category C2 (in line with EN 12944-2) • Zinc-coated screws • Rust-free breather elements Optional measures • Stainless steel shaft • Stainless steel nameplate • Rust-free shrink disc (on request)
OKS-L (large)	• External installation • Air humidity above 95% • Chemical industry plants • Food industry	• Surface coating as per corrosivity category C3 (in line with EN 12944-2) • Blower cover and B end shield additionally primed • Cable glands with gaskets • Corrosion-resistant brake with cover ring, stainless friction plate, and chrome-plated armature plate (on request) • All screws/screw plugs zinc-coated • Stainless breather elements • Threaded holes that are not used are closed by means of plastic plugs Optional measures • Sealed recesses on motor (on request) • Stainless steel shaft • Stainless steel nameplate • Rust-free shrink disc (on request) • Additional priming coat on cast iron fan • Oil expansion tank and torque plates painted separately and supplied loose



Surface and corrosion protection

Structure of surface coating

Surface and corrosion protection	Corrosivity category	Surface coating	Colour
	DIN EN ISO 12944-2	Structure	
Without OKS(uncoated)		Dipping primed gearbox	
OKS-G (primed)		Dipping primed gearbox 2K PUR priming coat	
OKS-S (small)	C1	Dipping primed gearbox 2K-PUR top coat	Standard: RAL 7012 Optional: RAL Classic
OKS-M (medium)	C2	Dipping primed gearbox 2K PUR priming coat 2K-PUR top coat	
OKS-L (large)	C3		

g500-S shaft-mounted helical gearbox

130 to 660 Nm

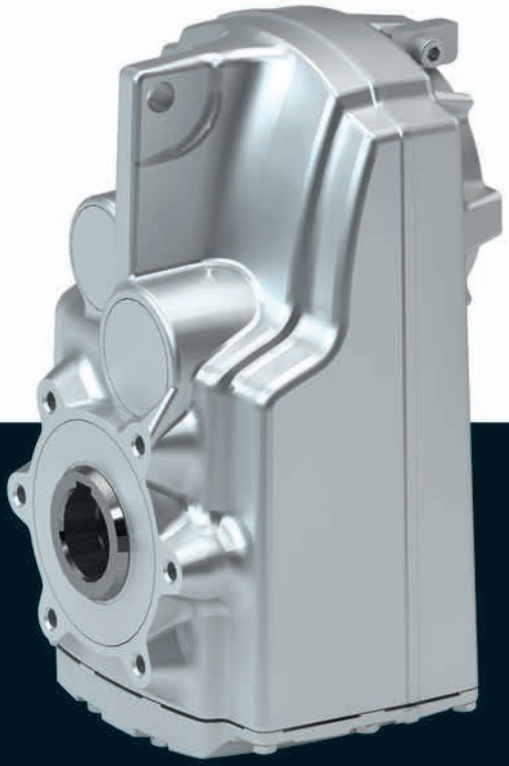

g500-S shaft-mounted helical gearbox

Contents



General information	List of abbreviations	6.5 - 5
	Product information	6.5 - 6
	Equipment	6.5 - 7
	The gearbox kit	6.5 - 8
	Functions and features	6.5 - 10
	Lubricants	6.5 - 11
	Ventilation	6.5 - 12
Technical data	Permissible radial and axial forces at output	6.5 - 15
	Moments of inertia	6.5 - 17
	Additional weights for gearboxes	6.5 - 19
Accessories	Torque plate	6.5 - 21
	Shaft cover	6.5 - 22





List of abbreviations

$F_{ax,max}$	[N]	Max. axial force
$F_{rad,max}$	[N]	Max. radial force
i		Ratio
J	[kgcm²]	Moment of inertia
m	[kg]	Mass

g500-S shaft-mounted helical gearbox

General information



Product information

The slim shaft-mounted helical gearboxes feature high reliable radial forces, closely stepped gear reductions and a low backlash. They are available in 2-pole and 3-pole design with a torque up to 660 Nm and a ratio of up to i= 495.

Versions

- Slimline design saves installation space of the machine
- Solid shaft, hollow shaft and shrink disc for direct integration into the machine
- High accuracy with axial output provide for the highest efficiency

The product name

Gearbox type	Product range		Design	Rated torque [Nm]	Product
Shaft-mounted helical gearbox	g500	-	S	130	g500-S130
				220	g500-S220
				400	g500-S400
				660	g500-S660



Equipment

Overview

The equipment includes all the options available as standard and all the built-on accessories of the product.

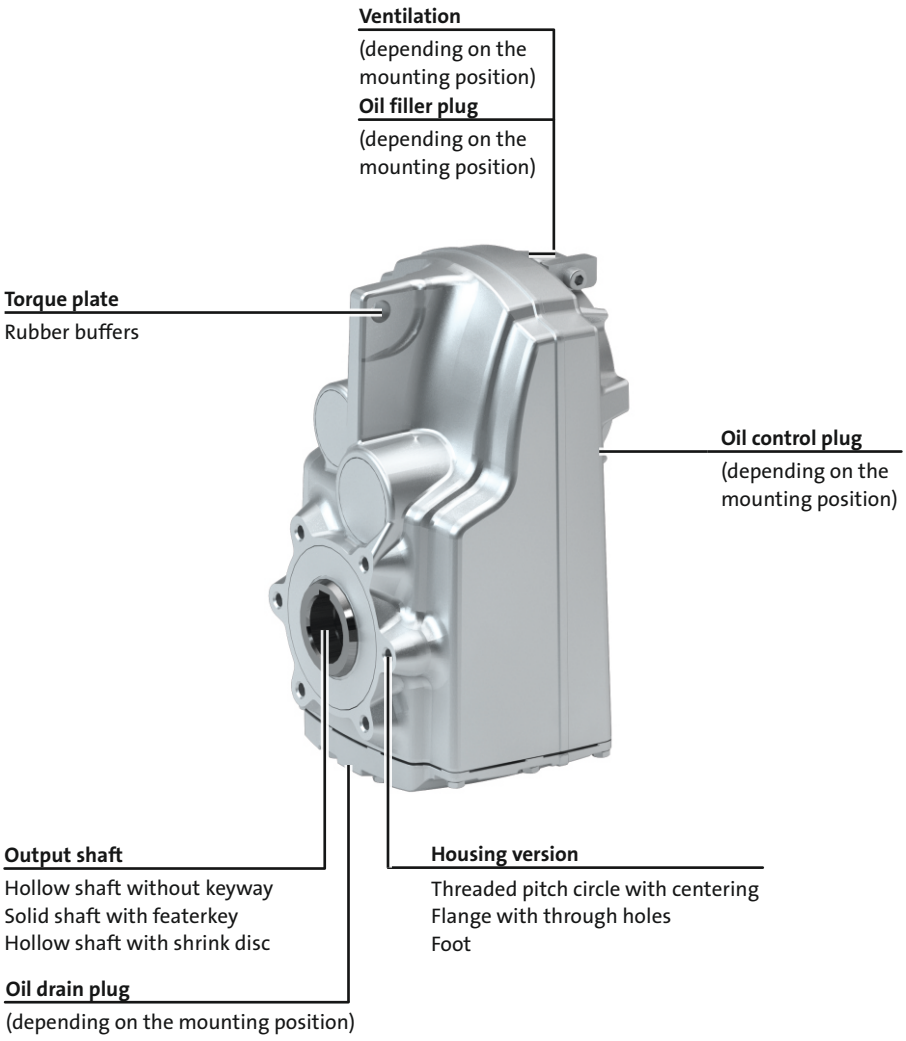



The gearbox kit

Gearbox details

Product	g500-S130	g500-S220	g500-S400	g500-S660
Driven shaft				
Solid shaft with featherkey [mm]	25x50		30x60	35x70 40x80
Hollow shaft with keyway [mm]	25	25/30	30/35	40/45
Hollow shaft with shrink disc [mm]	25	25/30	35	40
Design	Standard stainless steel			
Gasket	Standard FPM (Viton)			
Bearing	Standard			
Fitting grease	Not enclosed Enclosed			
Housing				
Housing version	With foot without centring With centering			
Output flange				
flange diameter [mm]	160		200	200/250 [1]
Lubricant				
Type	CLP 460 [2] CLP HC 320 CLP HC 220 CLP HC 220 USDA H1			
Oil-level inspection	Without inspection With inspection			
Breather element	Without		Standard mounting position: Mounted Combined mounting position: loosely enclosed	
Backlash				
Backlash	Standard			
Accessories				
Torque plate	Rubber buffers			
Shaft cover	Shrink disc: Rotating cover Shrink disc: Fixed cover			

[1] 200 mm flange diameter only possible on hollow shaft version.
[2] Not suitable for geared servo motors.

6.5

► Further information and installation feasibilities can be found in the Gearboxes chapter.



The gearbox kit

Gearbox details

Solid shaft

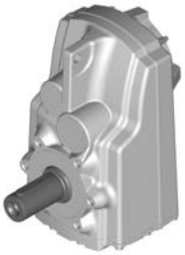

without centring

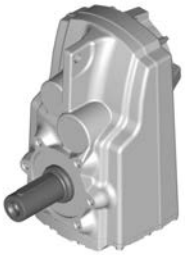

With centering



Flange with through holes

Hollow shaft



without centring



With centering



Flange with through holes

Hollow shaft with shrink disc



without centring



With centering



Flange with through holes

Accessories



Foot mounting



With rubber buffer

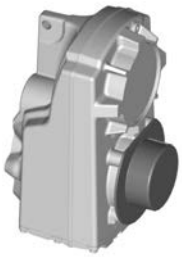

Shrink disc cover

6.5



Functions and features

Product	g500-S130	g500-S220	g500-S400	g500-S660
Housing				
Design	Cuboid			
Material	Aluminium			
Solid shaft				
Design	with keyway to DIN 6885			
Tolerance	Shaft diameter ≤ 50 mm: k6 Shaft diameter > 50 mm: m6			
Material	Tempered steel C45 Nirosta X46Cr13			
Hollow shaft				
Design	With keyway Without keyway (for shrink disc)			
Tolerance	Bore H7			
Material	Tempered steel C45 Nirosta X46Cr13			
Toothed parts				
Design	Ground tooth flanks Optimised tooth flank geometry			
Material	Case-hardened steel			
Shaft-hub joint				
	1st and 2nd step: Force-fit 3rd step: positive-fit			
Shaft sealing rings				
Design	With dust lip			
Material	NB / FP			
Bearing				
Design	Ball bearing / tapered-roller bearing depending on size and design			
Lubricants				
	Standard: mineral oil Optional: synthetic oil [1]			
Quantities	Corresponding to mounting position (see nameplate)			
Mechanical efficiency				
2-stage gearboxes [$\eta_{c=1}$]	0.96			
3-stage gearboxes [$\eta_{c=1}$]		0.95		

[1] Standard for geared servo motors.

Direction of rotation

6.5

2-stage gearboxes	3-stage gearboxes
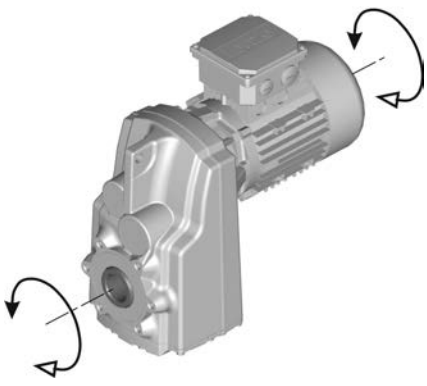	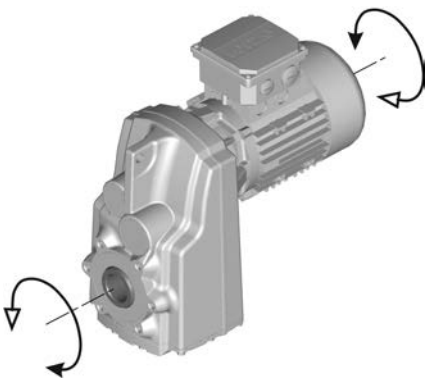



Lubricants

Lenze gearboxes and geared motors are ready for operation on delivery and are filled with lubricants specific to both the drive and the design. The mounting position and design specified in the order are key factors in choosing the volume of lubricant.

The lubricants listed in the lubricant table are approved for use in Lenze drives.

Lubricant table

Mode	CLP 460	CLP HC 320	CLP HC 220 USDA H1
Ambient temperature [°C]	0 ... +40	-25 ... +50	-20 ... +40
Specification	Mineral based oil with additives	Synthetic-based oil (synthetic hydrocarbon / poly-alpha-olefin oil)	
Changing interval	16000 operating hours not later than after three years (oil temperature 70 to 80 °C)	25000 operating hours not later than after three years (oil temperature 70 to 80 °C)	16000 operating hours not later than after three years (oil temperature 70 to 80 °C)
Fuchs	Fuchs Renolin CLP 460	Fuchs Renolin Unisyn CLP 320	bremer & leguil Cassida Fluid GL 220
Klüber	Klüberoil GEM1-460 N	Klübersynth GEM4-320 N	Klüberoil 4 UH1-220 N
Shell	Shell Omala S2 G 460	Shell Omala S4 GX HD 320	

► Please contact your Lenze sales office if you are operating at ambient temperatures in areas up to< -20 °C bzw. > or up to +40°C.

Shaft sealing rings

By default, the gearboxes come with NBR shaft sealing rings at the output end. At high speed and unfavourable ambient conditions as high temperature, reduced circulation of air etc., Lenze recommends the use of Viton shaft sealing rings.

Please consider this in your order.



Ventilation

Non-ventilated gearboxes

No ventilation is required for gearboxes g500-S130 to S220.

Ventilated gearboxes

The g500-S400 S660 gearbox is supplied with a breather element as standard.

Gearboxes in combined mounting position

To reduce the number of different versions, the gearboxes can also be ordered with combined mounting positions.
Depending on the gearbox in question, the following combinations are available:
g500-S130 to S660 in combined mounting position AEF
The breather elements are supplied loose.



Ventilation

Position of ventilation, sealing elements and oil level check

► **A ... F** mounting position

A	B
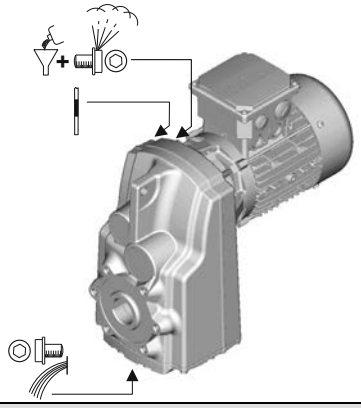	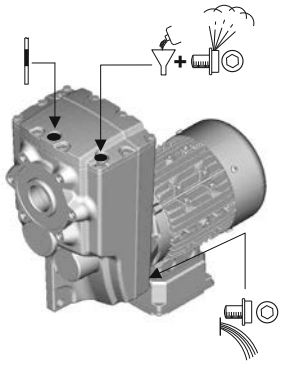
C	**D**
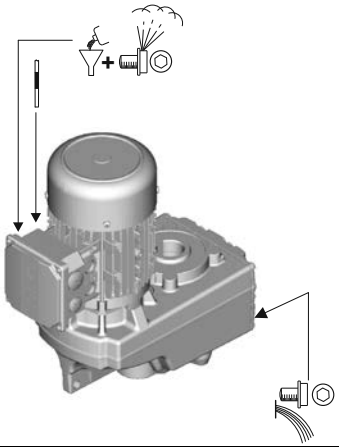	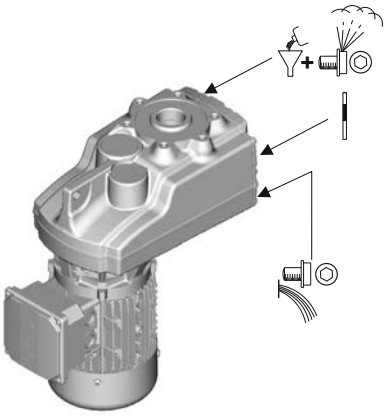
E	**F**
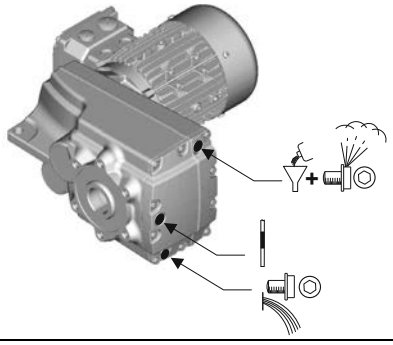	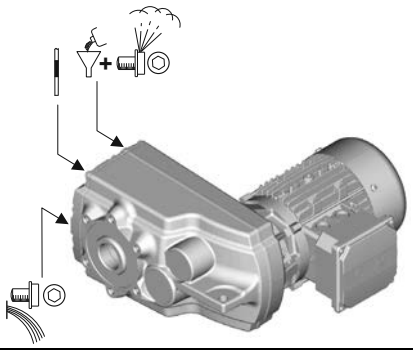

	Filling		Drain
	Ventilation		Check





Permissible radial and axial forces at output

Permissible radial force

$F_{rad,perm} = f_w \times F_{rad,max}$

► If F_{rad} **and** $F_{ax} \neq 0$, please contact Lenze.

Permissible axial force

If there is no radial force, the maximum permissible axial force is 50 % of the table value $F_{rad,max}$

Application of forces

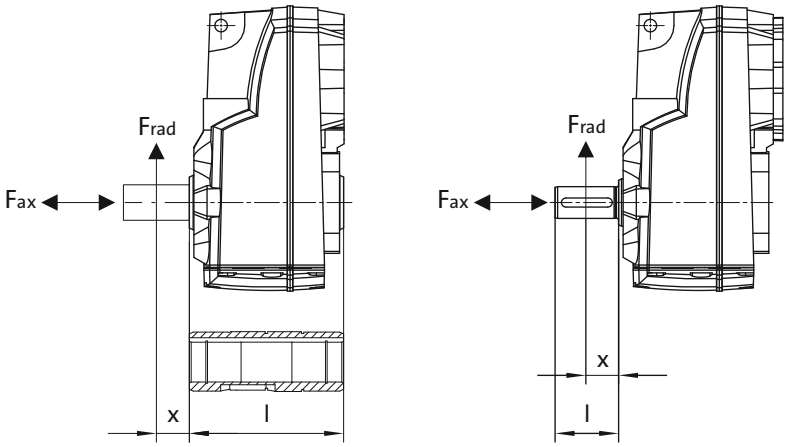

Additional load factor f_w at output shaft

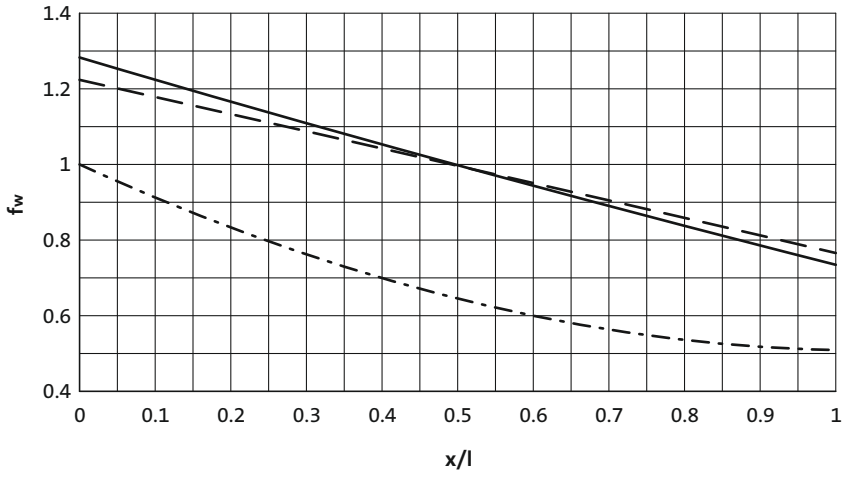

——— Solid shaft
— — — Solid shaft with flange
— · — Hollow shaft



Permissible radial and axial forces at output

The values given in the table refer to the center shaft end force application point and are minimum values calculated according to the most unfavourable conditions (force application angle, mounting position, direction of rotation). The values were calculated for the motor/gearbox combination with a load capacity of c= 1.3 and an input speed of 1400 rpm.

- ► If the torque is transmitted via the flange face, max 50 % of the radial force $F_{rad,max}$ are permissible.
- ► Neither radial nor axial forces are permissible for the hollow shaft with shrink disc.

In case of different operating conditions, considerably higher forces can be transmitted. Please contact Lenze.

Product	n_2 [r/min]									
	1000	630	400	250	160	100	63	40	25	≤16

	Max. radial force, Hollow shaft									
	$F_{rad,max}$	$F_{rad,max}$	$F_{rad,max}$	$F_{rad,max}$	$F_{rad,max}$	$F_{rad,max}$	$F_{rad,max}$	$F_{rad,max}$	$F_{rad,max}$	$F_{rad,max}$
	[N]	[N]	[N]	[N]	[N]	[N]	[N]	[N]	[N]	[N]
g500-S130	1000	1150	1350	1500	1650	2200	2750	3450	4200	4500
g500-S220	2100	2700	2800	3200	3800	4600	5500	6300	7000	7000
g500-S400	1800	2400	3000	3400	4100	5000	6000	7100	8000	8000
g500-S660	2400	3300	4300	4700	5000	6600	8500	10800	12000	12000

	Max. radial force, Solid shaft without flange									
	$F_{rad,max}$	$F_{rad,max}$	$F_{rad,max}$	$F_{rad,max}$	$F_{rad,max}$	$F_{rad,max}$	$F_{rad,max}$	$F_{rad,max}$	$F_{rad,max}$	$F_{rad,max}$
	[N]	[N]	[N]	[N]	[N]	[N]	[N]	[N]	[N]	[N]
g500-S130	1000	1150	1350	1500	1650	2200	2750	3450	4200	4500
g500-S220	1650	2100	2300	2700	3200	3600	3600	3600	3600	3600
g500-S400	1400	1900	2400	2700	3200	4000	4800	5800	6200	6200
g500-S660	1850	2500	3200	3600	3900	5100	6500	8400	9000	9000

	Max. radial force, Solid shaft with flange									
	$F_{rad,max}$	$F_{rad,max}$	$F_{rad,max}$	$F_{rad,max}$	$F_{rad,max}$	$F_{rad,max}$	$F_{rad,max}$	$F_{rad,max}$	$F_{rad,max}$	$F_{rad,max}$
	[N]	[N]	[N]	[N]	[N]	[N]	[N]	[N]	[N]	[N]
g500-S130	1000	1150	1350	1500	1650	2200	2750	3450	4200	4500
g500-S220	2300	2800	3200	3700	4400	4600	4600	4600	4600	4600
g500-S400	2900	3700	4300	5100	5900	6800	7000	7000	7000	7000
g500-S660	4000	5000	6100	7000	7800	9600	10000	10000	10000	10000



Moments of inertia

- The moments of inertia relate to the drive shaft of the gearbox.
- The total moment of inertia is calculated by adding the values of the gearbox, motor and accessories.

2-stage gearboxes

Product	Ratio	Moment of inertia
	i	J
		[kgcm²]
g500-S130	3.661	1.56
	5.021	0.89
	6.425	0.57
	7.029	0.49
	8.322	0.69
	9.411	1.03
	11.413	0.42
	12.907	0.60
	14.606	0.29
	15.979	0.25
	18.069	0.34
	20.381	0.17
	23.048	0.23
	24.967	0.13
	28.233	0.17
	31.387	0.087
	35.493	0.11
	40.422	0.059
	45.711	0.074
	51.230	0.039
	57.933	0.048
	64.200	0.027
	72.600	0.032
	84.581	0.016
	95.648	0.019
g500-S220	3.840	2.60
	5.267	1.54
	6.767	1.64
	7.667	1.50
	9.280	1.04
	10.514	0.96
	11.876	0.72
	12.992	0.62
	13.456	0.67
	14.720	0.58
	16.571	0.44
	18.776	0.42
	20.300	0.34
	23.000	0.32
	26.422	0.21
	29.937	0.20
	32.867	0.15
	37.238	0.14
	42.533	0.095
	48.190	0.091
	51.620	0.069
	58.486	0.067
	65.975	0.044
	74.750	0.043

Product	Ratio	Moment of inertia
	i	J
		[kgcm²]
g500-S400	3.339	5.16
	4.579	2.91
	5.860	1.86
	6.411	1.58
	7.467	2.18
	8.436	1.95
	10.240	1.32
	11.569	1.20
	13.105	0.89
	14.336	0.77
	14.806	0.82
	16.197	0.70
	18.286	0.53
	20.659	0.49
	22.400	0.40
	25.308	0.37
	29.156	0.24
	32.940	0.23
	36.267	0.17
	40.974	0.16
	46.933	0.11
	53.026	0.10
	56.960	0.079
	64.354	0.074
g500-S660	3.920	8.80
	5.376	5.26
	6.417	5.48
	6.880	3.48
	7.311	4.90
	8.800	3.50
	10.027	3.19
	11.262	2.41
	12.320	2.12
	12.832	2.22
	14.037	1.96
	15.714	1.51
	17.905	1.42
	19.250	1.15
	21.933	1.09
	25.056	0.65
	28.548	0.61
	31.167	0.47
	35.511	0.44
	40.333	0.29
	45.956	0.28
	48.950	0.21
	55.773	0.20



Moments of inertia

3-stage gearboxes

Product	Ratio	Moment of inertia
	i	J
		[kgcm²]
g500-S220	40.012	0.20
	45.333	0.20
	52.587	0.13
	59.581	0.13
	67.298	0.092
	76.249	0.091
	86.079	0.062
	97.528	0.061
	111.747	0.044
	126.610	0.043
	143.205	0.030
	162.252	0.030
	241.022	0.014
	273.079	0.014
	312.233	0.003
	353.762	0.003
	398.508	0.006
	451.512	0.006
g500-S400	58.027	0.14
	65.559	0.14
	74.260	0.098
	83.900	0.095
	94.984	0.066
	107.314	0.064
	123.307	0.046
	139.313	0.045
	158.019	0.032
	178.531	0.031
	204.412	0.021
	230.946	0.021
	265.956	0.014
	300.479	0.014
	344.533	0.004
	389.256	0.004
	439.733	0.006
	496.814	0.006

Product	Ratio	Moment of inertia
	i	J
		[kgcm²]
g500-S660	49.867	0.39
	56.818	0.38
	63.817	0.27
	69.813	0.23
	72.713	0.26
	79.545	0.23
	89.048	0.17
	101.460	0.16
	109.083	0.13
	124.289	0.12
	137.133	0.083
	156.249	0.082
	176.611	0.056
	201.230	0.056
	223.833	0.037
	255.034	0.037
	280.500	0.026
	319.600	0.025
	369.548	0.016
	421.060	0.015



Additional weights for gearboxes

Product			g500-S130	g500-S220	g500-S400	g500-S660
Mass						
Solid shaft	m	[kg]	0.5	0.5	1.7	2.5
Shrink disc	m	[kg]	0.2	0.4	0.6	0.6
Foot	m	[kg]	1.7	1.8	3.3	4.3
Flange	m	[kg]	0.4	0.4	0.9	1.7





Torque plate

The torque is usually supported via the foot or the flange.
Another simple option is the integrated torque plate at the housing. Here, the torque is supported only via one point and is, among other things, suitable for shaft-mounted gearboxes. Moreover, the suitable rubber buffers provide for a low-tension installation and absorb slight shocks.

The rubber buffers can be ordered optionally.

Rubber buffer for torque plate

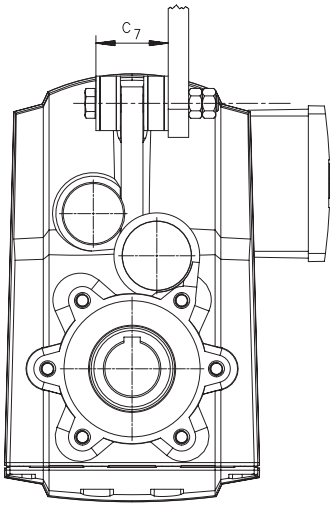

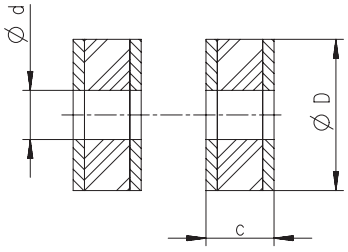

6.5

Product	Dimensions				Mass
	d	D	c	c_7	m
	[mm]	[mm]	[mm]	[mm]	[kg]
g500-S130	11.0	30.0	17.0	45.0	0.050
g500-S220	11.0	30.0	17.0	45.0	0.050
g500-S400	13.0	40.0	18.0	49.0	0.10
g500-S660	13.0	40.0	18.0	52.0	0.10



Shaft cover

Shrink disc cover

The cover is provided for the shrink disc to be protected from contact.

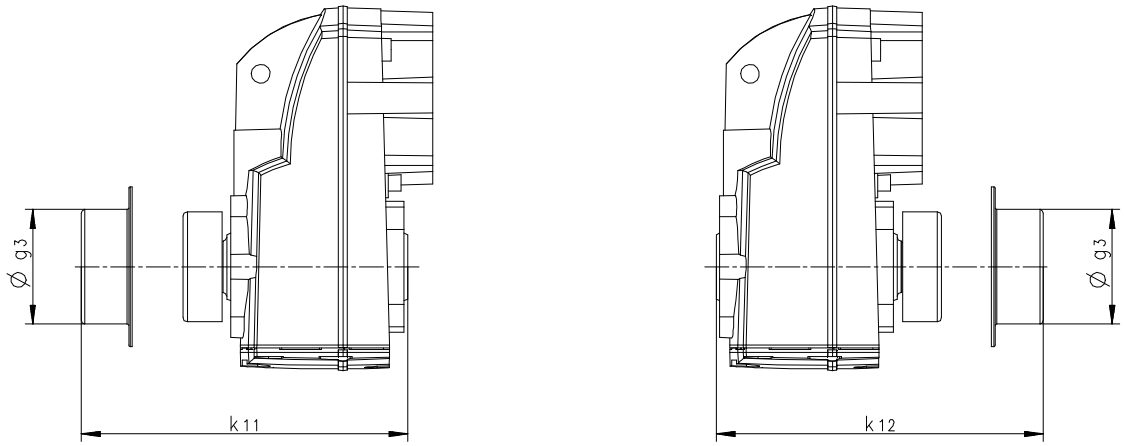

Product	Dimensions			Mass
	g_3	k_{11}	k_{12}	m
	[mm]	[mm]	[mm]	[kg]
g500-S130	63.0	132	132	0.050
g500-S220	76.0	152	152	0.050
g500-S400	90.0	182	182	0.050
g500-S660	90.0	200	202	0.050





g500-B bevel geared motors

17 ... 440 Nm (asynchronous servo motors)

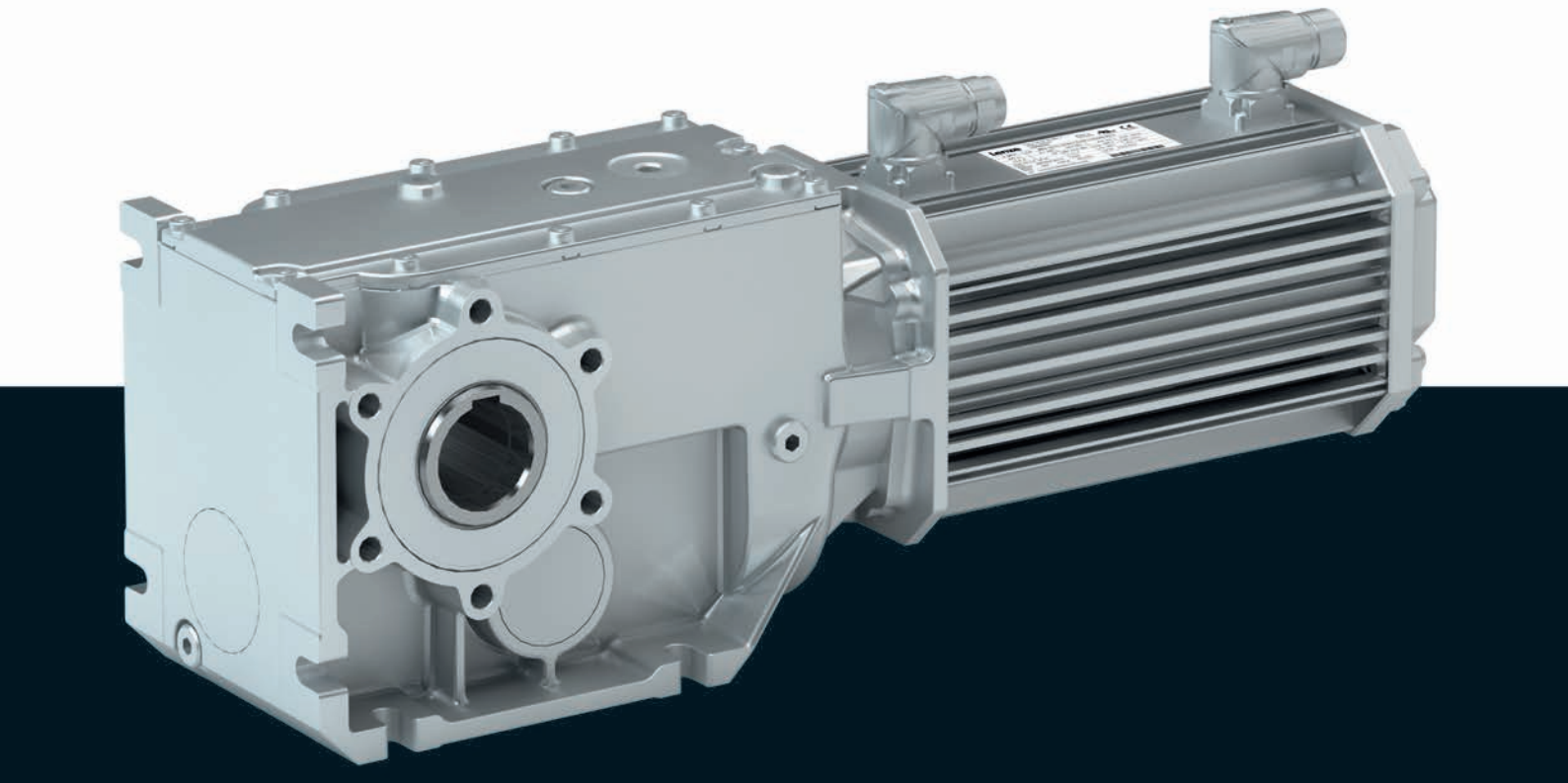

g500-B bevel geared motors

Contents



General information	List of abbreviations	6.7 - 5
	Product information	6.7 - 6
	Equipment	6.7 - 7
	The gearbox kit	6.7 - 8
	Dimensioning	6.7 - 14
Technical data	Selection tables, notes	6.7 - 19
	Selection tables	6.7 - 20
	Dimensions, notes	6.7 - 24
	Dimensions, self-ventilated motors	6.7 - 25
	Dimensions, forced ventilated motors	6.7 - 34
	Weights, self-ventilated motors	6.7 - 40
	Weights, forced ventilated motors	6.7 - 41
	Surface and corrosion protection	6.7 - 42

Contents

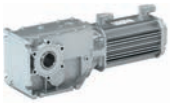

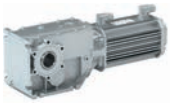

List of abbreviations

c		Load capacity
i		Ratio
J	[kgcm²]	Moment of inertia
m	[kg]	Mass
M_2	[Nm]	Output torque
$M_{2, max}$	[Nm]	Max. output torque
$n_{2, eto}$	[r/min]	Transition speed
$n_{2, th}$	[r/min]	Thermal limit speed

CCC	China Compulsory Certificate
CE	Communauté Européenne
CSA	Canadian Standards Association
cURus	Combined certification marks of UL for the USA and Canada
DIN	Deutsches Institut für Normung e.V.
EMC	Electromagnetic compatibility
EN	European standard
GOST	Certificate for Russian Federation
IEC	International Electrotechnical Commission
IM	International Mounting Code
IP	International Protection Code
NEMA	National Electrical Manufacturers Association
UL	Underwriters Laboratory Listed Product
UR	Underwriters Laboratory Recognized Product
VDE	Verband deutscher Elektrotechniker (Association of German Electrical Engineers)

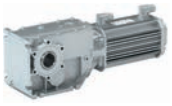

Product information

In combination with servo motors, our bevel gearboxes form a compact and powerful drive unit. Numerous options at the input and output end provide for the drive to be exactly adapted to your application.

The efficient bevel gearboxes feature high reliable radial forces, closely stepped gear reductions and a low backlash. They are available in 2-pole and 3-pole design with a torque up to 450 Nm and a ratio of up to i= 360.

Versions

- High-efficient right-angle gearbox in a compact design for space-saving installation
- Standardised shaft and flange dimensions for an easy machine integration
- Low backlash and high torsional stiffness provide for exact results in positioning applications
- With MCA asynchronous servo motors, rated torque: 2 Nm ... 61.4 Nm

The product name

Gearbox type	Product range		Design	Rated torque [Nm]	Product
Bevel gearbox	g500	-	B	45	g500-B45
				110	g500-B110
				240	g500-B240
				450	g500-B450

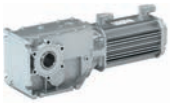

Equipment

Overview

The equipment includes all the options available as standard and all the built-on accessories of the product.

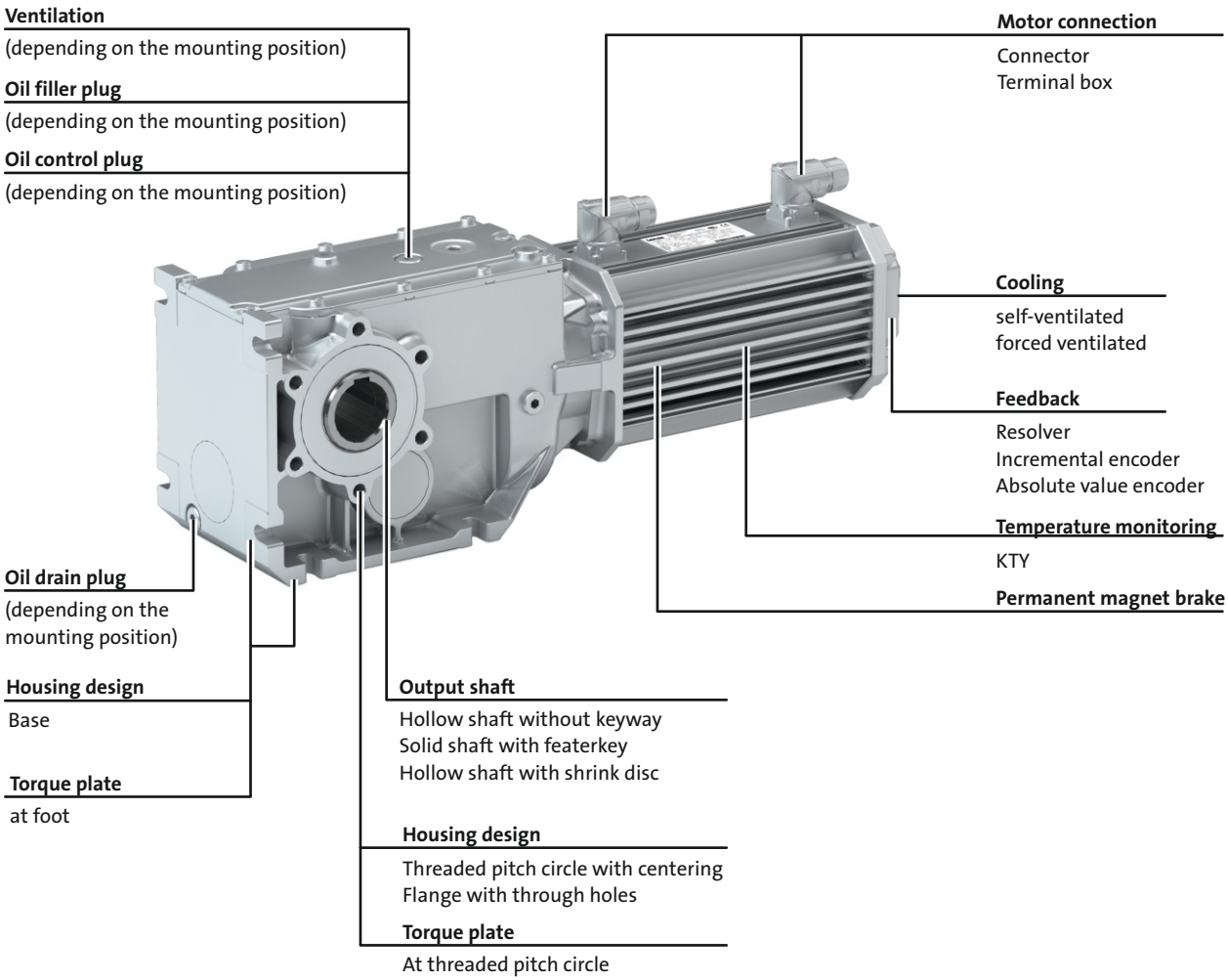

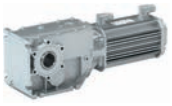

The gearbox kit

Geared motor

Product	g500-B110	g500-B240	g500-B450
Motor type	Asynchronous servo motor		
Servo motor			
2.0 Nm	MCA10		
4.0 - 6.3 Nm	MCA13		
5.4 - 12 Nm		MCA14	
9.5 - 21 Nm			MCA17
Technical data			
Output torque	See selection table		
Output speed	See selection table		
Ratio	See selection table		
Load capacity	See selection table		
Moment of inertia	See selection table		
Mounting position			
Standard	A/B/C/D/E/F		
Combined	AEF		
Colour	Not coated Primed Paint in various corrosion-protection designs in accordance with RAL colours		
Surface and corrosion protection	Without OKS(uncoated) OKS-G (primed) OKS-S (small) OKS-M (medium) OKS-L (large)		

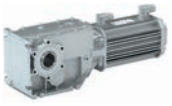

The gearbox kit

Mounting positions

► Mounting position (A to F) and position of system blocks (1 to 6)

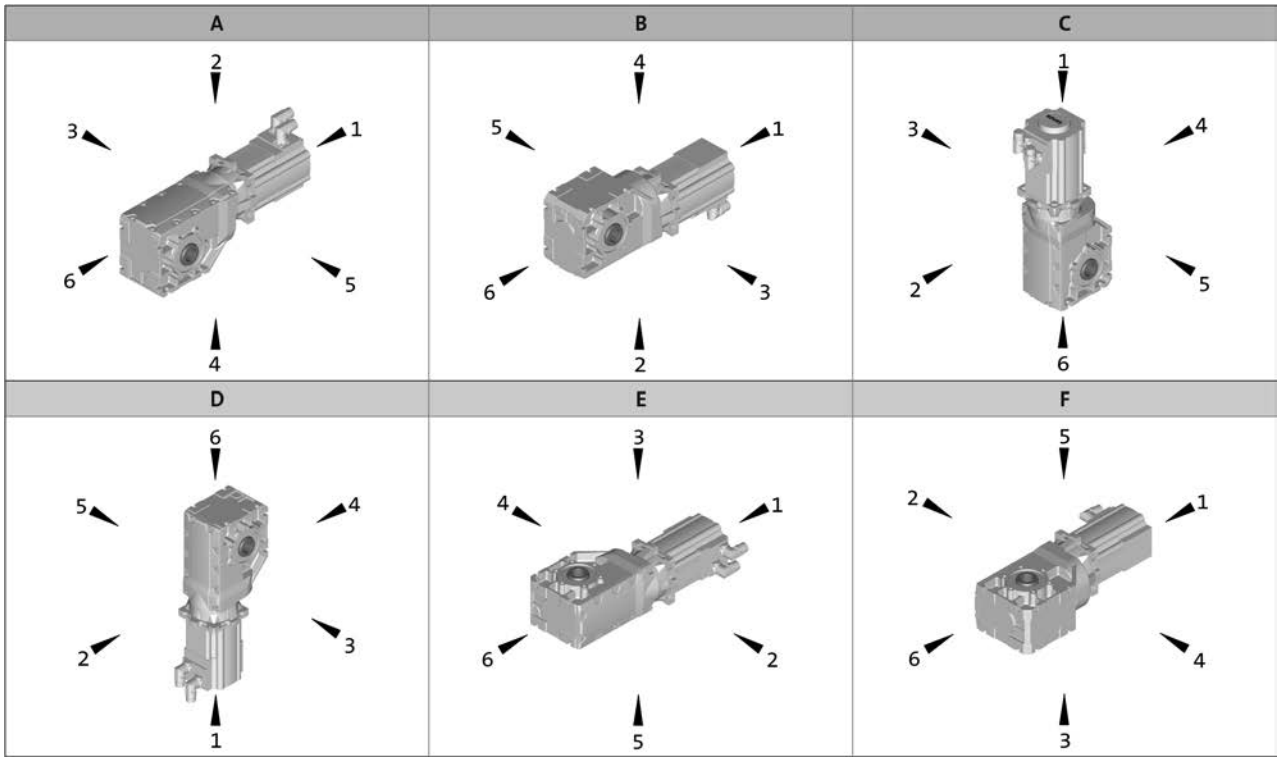

Hollow shaft: 0
Solid shaft: 3, 5, 8 (3+5)
Hollow shaft with shrink disc: 3, 5

Without flange: 0
Flange: 3, 5, 8 (3+5)
Connector / terminal box: 2, 3, 4, 5

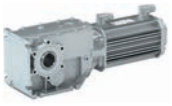

The gearbox kit

Motor details

Product	MCA					
	10I40	13I34 13I41	14L16 14L20 14L35 14L41	17N17 17N23 17N35 17N41	19S17 19S23 19S35 19S42	21X17 21X25 21X35 21X42
Connection type	Plug connectors Terminal box					
Permanent magnet holding brake						
Rated torque [Nm]	3.3	12	15	24	46	88
Brake voltage [V]	DC 24 AC 230					
Feedback	With absolute value encoder With incremental encoder With resolver					
Cooling	Self-ventilated	Self-ventilated Forced-ventilated				
Temperature monitoring	KTY83-110 thermal detector					
Approval	cURus GOST_R UkrSepro					
Degree of protection	IP54 IP65					

► Further information and installation feasibilities can be found in the Motors chapter.

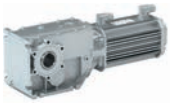

The gearbox kit

Motor details

Connection type
 Plug connectors  Terminal box

Cooling: self-ventilated
 With resolver  With permanent magnet brake  With feedback With feedback and permanent magnet brake

Cooling: forced ventilated
 With resolver  With permanent magnet brake 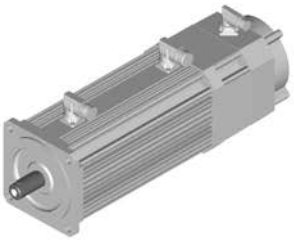 With feedback With feedback and permanent magnet brake

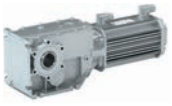

The gearbox kit

Gearbox details

Product	g500-B45	g500-B110	g500-B240	g500-B450
Driven shaft				
Solid shaft without keyway [mm]				
Solid shaft with featherkey [mm]	20x40		30x60	
Hollow shaft with keyway [mm]	18/20	20/25	30/35	35/40
Hollow shaft with shrink disc [mm]	20		30/35	35
Design	Standard stainless steel			
Gasket	Standard FPM (Viton)			
Bearing	Standard			
Fitting grease	Not enclosed Enclosed			
Housing				
Housing version	With foot With foot and centering			
Output flange				
flange diameter [mm]	110/120	120/160	160/200	200
Lubricant				
Type	CLP 460 [1)] CLP HC 320 CLP HC 220 CLP HC 220 USDA H1			
Oil-level inspection	Without inspection			Without inspection With inspection
Breather element	Without			Standard mounting position: Mounted Combined mounting position: loosely enclosed
Backlash				
Backlash	Standard			
Accessories				
Torque plate	Rubber buffers At threaded pitch circle	At threaded pitch circle	At threaded pitch circle At foot	At foot
Shaft cover	Hollow shaft Shrink disc: Rotating cover Shrink disc: Fixed cover			

[1)] Not suitable for geared servo motors.

► Further information and installation feasibilities can be found in the Gearboxes chapter.

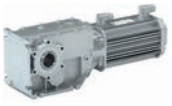

The gearbox kit

Gearbox details

Solid shaft



Foot mounting
without centring



Foot mounting
With centering



Flange with through holes

Hollow shaft



Foot mounting
without centring



Foot mounting
With centering



Flange with through holes

Hollow shaft with shrink disc



Foot mounting
without centring



Foot mounting
With centering

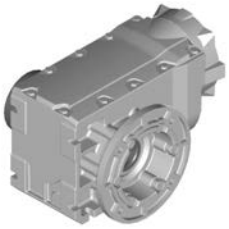

Flange with through holes

Accessories



2nd output shaft end



Torque plate
at foot



Torque plate
at threaded pitch circle

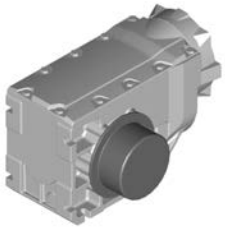

Cover
Hollow shaft/shrink disc

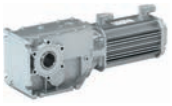

Dimensioning

General information about the data provided in this catalogue

The powers, torques and speeds specified in this catalogue are rounded values and are valid under the following conditions:

- Operating time/day = 8 h (100% OT)
- Duty class I for up to 10 switching operations/h
- Mounting positions and designs in this catalogue
- Standard lubricant
- T_{amb} = 20 °C for gearboxes,
  T_{amb} = 40 °C for motors (in accordance with EN 60034)
- Site altitude < = 1000 m amsl
- The selection tables provide the permissible mechanical powers and torques. For notes on the thermal power limit, see chapter drive dimensioning.
- The rated power specified for motors and geared motors applies to operating mode S1 (in accordance with EN 60034).

Under different operating conditions, the values obtained may vary from those listed here.
In the case of extreme operating conditions, please consult your Lenze sales office.

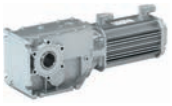

Dimensioning

Thermal power limit

The thermal power limit, defined by the heat balance, limits the permissible gearbox continuous power. It may be less than the mechanical power ratings listed in the selection tables.

The thermal power limit is affected by:
- the churning losses in the lubricant. These are determined by the mounting position and the circumferential speed of the gears;
- the load and the speed
- the ambient conditions: temperature, air circulation, input or dissipation via shafts and the foundation

If the following input speeds n_1 are exceeded, please contact Lenze:

Motor frame size	Mounting position A, B, E, F	Mounting position C, D
MCA10 ... 14	4000 r/min	3000 r/min
MCA17	3000 r/min	1500 r/min

► For a short period of time up to 5 min, 30 % higher speeds are permissible

Possible ways of extending the application area

- shaft sealing rings made from FP material/Viton (option)
- reduction in lubricant quantity
- cooling of the geared motor by means of air convection on the machine/system

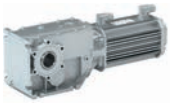

Dimensioning

Load capacity and application factor

Load capacity c of gearbox
Rated value for the load capacity of Lenze geared motors.
- c is the ratio of the permissible rated torque of the gearbox to the rated torque supplied by the drive component (e.g. the built-in Lenze motor).
- The value of c must always be greater than the value of the application factor k calculated for the application.

Application factor k (according to DIN 3990)
Takes into account the influence of temporally variable loads which are actually present during the anticipated operating time of gearboxes and geared motors.
k is determined by:
- the type of load
- the load intensity
- temporal influences

Duty class	Load type
I	Smooth operation, small or light jolts
II	Uneven operation, average jolts
III	Uneven operation, severe jolts and/or alternating load

Application factor k

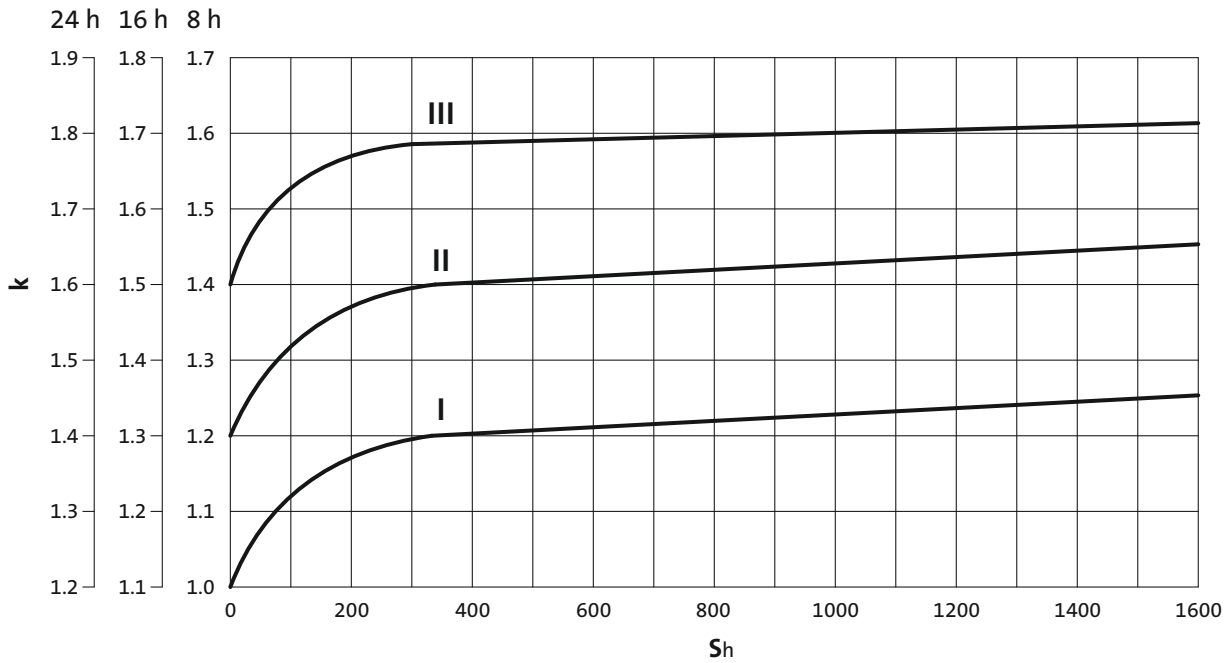

► S_h= switchings/h

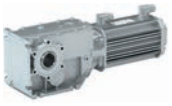

Dimensioning

Weights

The values given in the tables consider the following gearbox/motor combination:
- Gearbox with solid shaft including lubricant amount
- Motor with feedback

For versions deviating from this, additional weights have to be considered.

The respective values can be found for:
- Geared motors with feedback
  > Chapter: Geared motors/Technical data
- Motor options: Brake
  > Chapter: Motors/Accessories

Moments of inertia

The given moments of inertia of the gearbox refer to the drive shaft. The influence of the ratio (i^2) has been considered in the data.

When the total moment of inertia of the geared motor is calculated, the values of the geared motors and the brake have to be added.

The respective values can be found for:
- Geared motors with feedback
  > Chapter: Geared motors/Technical data/Selection tables
- Motor options: Brake
  > Chapter: Motors/Accessories

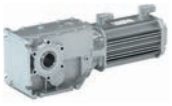



Selection tables, notes

Notes on the selection tables

The selection tables show the available combinations of gearbox type, number of stages, ratio and motor. They are used only to provide basic orientation.
The following legend indicates the structure of the selection tables.

Number of the gear stage of the gearbox

2-stage gearboxes

Inverter operation						i	Product		Cooling	
$M_{2,max}$ [Nm]	$n_{2,th}$ [r/min]	M_2 [Nm]	$n_{2,eto}$ [r/min]	c	J [kgcm²]		g500	MCS		
49	749	6	749	4.5	0.500	5.411	-B45	06F41	Selbst	29
49	749	8	749	3.6	0.600	5.411	-B45	06I41	Selbst	29
50	162	14	162	2.3	0.200	25.051	-B45	06C41	Selbst	29
50	162	29	162	1.1	0.200	25.051	-B45	06F41	Selbst	29

For operating mode S1
Torque **M_2** and
thermal output speed **$n_{2,th}$**

For operating mode S2,S3 und S6
Max. permissible acceleration torque of geared motor **$M_{2,max}$** and
output speed **$n_{2,eto}$**

Moment of inertia of geared motor

Ratio i

Product Gearbox

Product Motor

Type of motor cooling

Page number for dimensions

Load capacity of the gearbox
c is the ratio between the permissible rated torque of the gearbox and the rated torque of the three-phase AC motor (converted to the driven shaft).
c must be always higher than the service factor **k** determined for the application **k**.

$$c = \frac{M_{2,zul}}{M_{1,N} \cdot i \cdot \eta_{Getr}} > k$$

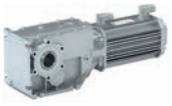

Selection tables

2-stage gearboxes

Inverter operation						i	Product		Cooling	
$M_{2, max}$ [Nm]	$n_{2, th}$ [r/min]	M_2 [Nm]	$n_{2, eto}$ [r/min]	c	J [kgcm²]		g500	MCA		
84	434	17	434	3.5	2.700	9.101	-B110	10I40	natural	25
89	377	20	377	3.2	2.700	10.466	-B110	10I40	natural	25
90	345	22	345	3.0	2.700	11.449	-B110	10I40	natural	25
90	311	24	311	2.7	2.600	12.698	-B110	10I40	natural	25
90	271	28	271	2.4	2.600	14.603	-B110	10I40	natural	25
92	260	59	260	1.1	8.400	15.556	-B110	13I41	natural	25
92	254	30	254	2.3	2.500	15.556	-B110	10I40	natural	25
96	226	68	226	1.0	8.400	17.889	-B110	13I41	natural	25
96	221	34	221	2.0	2.500	17.889	-B110	10I40	natural	25
100	202	37	202	1.9	2.500	19.556	-B110	10I40	natural	25
104	176	43	176	1.8	2.500	22.489	-B110	10I40	natural	25
106	106	71	106	1.1	2.500	37.400	-B110	10I40	natural	25
108	844	21	844	4.9	11.000	3.565	-B240	13I34	forced	34
108	157	48	157	1.6	2.500	25.185	-B110	10I40	natural	25
110	136	55	136	1.4	2.500	28.963	-B110	10I40	natural	25
138	561	23	561	5.5	22.000	3.565	-B240	14L20	natural	28
138	459	41	459	3.3	22.000	3.565	-B240	14L16	forced	34
147	409	31	409	4.3	21.000	4.889	-B240	14L20	natural	28
147	334	56	334	2.6	21.000	4.889	-B240	14L16	forced	34
156	545	37	545	3.2	9.500	6.257	-B240	13I34	forced	34
156	320	40	320	3.6	20.000	6.257	-B240	14L20	natural	28
156	261	71	261	2.1	20.000	6.257	-B240	14L16	forced	34
179	291	44	291	3.7	21.000	6.883	-B240	14L20	natural	28
179	238	78	238	2.2	21.000	6.883	-B240	14L16	forced	34
187	256	50	256	3.4	21.000	7.817	-B240	14L20	natural	28
187	209	89	209	2.0	21.000	7.817	-B240	14L16	forced	34
191	212	60	212	2.9	20.000	9.440	-B240	14L20	natural	28
191	173	108	173	1.7	20.000	9.440	-B240	14L16	forced	34
196	191	39	191	4.4	2.700	20.650	-B240	10I40	natural	28
204	187	68	187	2.7	20.000	10.720	-B240	14L20	natural	28
204	153	122	153	1.6	20.000	10.720	-B240	14L16	forced	34
208	166	77	166	2.5	20.000	12.081	-B240	14L20	natural	28
208	135	138	135	1.5	20.000	12.081	-B240	14L16	forced	34
217	146	87	146	2.3	20.000	13.719	-B240	14L20	natural	28
217	119	156	119	1.4	20.000	13.719	-B240	14L16	forced	34
223	168	45	168	3.9	2.700	23.450	-B240	10I40	natural	28
223	133	96	133	2.1	20.000	15.008	-B240	14L20	natural	28
223	109	171	109	1.3	20.000	15.008	-B240	14L16	forced	34
233	75	100	75	1.9	2.500	52.510	-B240	10I40	natural	28
240	240	64	240	2.7	8.700	16.857	-B240	13I41	natural	28



Selection tables

2-stage gearboxes

Inverter operation						i	Product		Cooling	
$M_{2, max}$ [Nm]	$n_{2, th}$ [r/min]	M_2 [Nm]	$n_{2, eto}$ [r/min]	c	J [kgcm²]		g500	MCA		
240	212	73	212	2.4	8.700	19.143	-B240	13I41	natural	28
240	202	101	202	1.8	8.700	16.857	-B240	13I34	forced	34
240	196	78	196	2.2	8.600	20.650	-B240	13I41	natural	28
240	178	115	178	1.6	8.700	19.143	-B240	13I34	forced	34
240	173	89	173	1.9	8.600	23.450	-B240	13I41	natural	28
240	165	124	165	1.5	8.600	20.650	-B240	13I34	forced	34
240	151	102	151	1.7	8.500	26.878	-B240	13I41	natural	28
240	147	51	147	3.4	2.600	26.878	-B240	10I40	natural	28
240	145	140	145	1.3	8.600	23.450	-B240	13I34	forced	34
240	133	116	133	1.5	8.500	30.522	-B240	13I41	natural	28
240	129	58	129	3.0	2.600	30.522	-B240	10I40	natural	28
240	127	161	127	1.1	8.500	26.878	-B240	13I34	forced	34
240	121	127	121	1.4	8.500	33.433	-B240	13I41	natural	28
240	119	107	119	2.0	20.000	16.857	-B240	14L20	natural	28
240	118	64	118	2.7	2.600	33.433	-B240	10I40	natural	28
240	112	183	112	1.0	8.500	30.522	-B240	13I34	forced	34
240	107	144	107	1.2	8.400	37.967	-B240	13I41	natural	28
240	105	122	105	1.8	20.000	19.143	-B240	14L20	natural	28
240	104	72	104	2.4	2.500	37.967	-B240	10I40	natural	28
240	97	131	97	1.7	20.000	20.650	-B240	14L20	natural	28
240	97	192	97	1.2	20.000	16.857	-B240	14L16	forced	34
240	91	82	91	2.4	2.500	43.267	-B240	10I40	natural	28
240	85	149	85	1.5	20.000	23.450	-B240	14L20	natural	28
240	85	218	85	1.1	20.000	19.143	-B240	14L16	forced	34
240	80	93	80	2.1	2.500	49.133	-B240	10I40	natural	28
240	66	113	66	1.7	2.500	59.630	-B240	10I40	natural	28

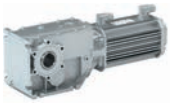

Selection tables

3-stage gearboxes

Inverter operation						i	Product		Cooling	
$M_{2, max}$ [Nm]	$n_{2, th}$ [r/min]	M_2 [Nm]	$n_{2, eto}$ [r/min]	c	J [kgcm²]		g500	MCA		
280	460	51	460	4.7	40.000	5.002	-B450	17N23	natural	31
280	336	102	336	2.6	40.000	5.002	-B450	17N17	forced	37
308	335	70	335	3.8	38.000	6.860	-B450	17N23	natural	31
308	245	140	245	2.1	38.000	6.860	-B450	17N17	forced	37
308	238	78	238	3.8	22.000	6.860	-B450	14L16	forced	37
368	247	96	247	3.3	39.000	9.315	-B450	17N23	natural	31
368	180	190	180	1.9	39.000	9.315	-B450	17N17	forced	37
368	176	106	176	3.4	22.000	9.315	-B450	14L16	forced	37
383	98	77	98	4.8	2.700	40.330	-B450	10I40	natural	31
384	223	106	223	3.1	39.000	10.328	-B450	17N23	natural	31
384	163	211	163	1.8	39.000	10.328	-B450	17N17	forced	37
384	158	118	158	3.2	22.000	10.328	-B450	14L16	forced	37
404	180	131	180	2.7	38.000	12.775	-B450	17N23	natural	31
404	132	261	132	1.5	38.000	12.775	-B450	17N17	forced	37
404	128	146	128	2.7	21.000	12.775	-B450	14L16	forced	37
422	162	145	162	2.5	38.000	14.165	-B450	17N23	natural	31
422	141	90	141	4.3	21.000	14.165	-B450	14L20	natural	31
422	119	289	119	1.4	38.000	14.165	-B450	17N17	forced	37
422	115	161	115	2.5	21.000	14.165	-B450	14L16	forced	37
430	87	86	87	4.3	2.600	45.245	-B450	10I40	natural	31
434	209	98	209	3.4	9.500	16.349	-B450	13I34	forced	37
434	141	168	141	2.2	37.000	16.349	-B450	17N23	natural	31
434	122	104	122	3.8	20.000	16.349	-B450	14L20	natural	31
434	103	334	103	1.3	37.000	16.349	-B450	17N17	forced	37
434	100	186	100	2.3	20.000	16.349	-B450	14L16	forced	37
446	191	107	191	3.2	9.300	17.885	-B450	13I34	forced	37
446	129	183	129	2.1	37.000	17.885	-B450	17N23	natural	31
446	112	114	112	3.6	20.000	17.885	-B450	14L20	natural	31
446	94	365	94	1.2	37.000	17.885	-B450	17N17	forced	37
446	91	204	91	2.1	20.000	17.885	-B450	14L16	forced	37
450	178	87	178	3.7	9.000	22.813	-B450	13I41	natural	31
450	172	119	172	2.9	9.300	19.831	-B450	13I34	forced	37
450	160	96	160	3.4	9.000	25.294	-B450	13I41	natural	31
450	152	234	152	1.5	20.000	22.813	-B450	14L35	forced	37
450	150	137	150	2.5	9.000	22.813	-B450	13I34	forced	37
450	145	106	145	3.0	8.800	27.945	-B450	13I41	natural	31
450	135	151	135	2.3	9.000	25.294	-B450	13I34	forced	37
450	131	118	131	2.8	8.800	30.985	-B450	13I41	natural	31
450	124	287	124	1.2	20.000	27.945	-B450	14L35	forced	37
450	122	167	122	2.0	8.800	27.945	-B450	13I34	forced	37

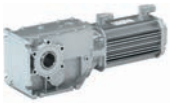

Selection tables

3-stage gearboxes

Inverter operation						i	Product		Cooling	
$M_{2, max}$ [Nm]	$n_{2, th}$ [r/min]	M_2 [Nm]	$n_{2, eto}$ [r/min]	c	J [kgcm²]		g500	MCA		
450	116	203	116	1.9	37.000	19.831	-B450	17N23	natural	31
450	111	138	111	2.3	8.600	36.373	-B450	13I41	natural	31
450	110	185	110	1.9	8.800	30.985	-B450	13I34	forced	37
450	101	126	101	3.2	20.000	19.831	-B450	14L20	natural	31
450	101	234	101	1.7	37.000	22.813	-B450	17N23	natural	31
450	100	153	100	2.4	8.600	40.330	-B450	13I41	natural	31
450	94	218	94	1.6	8.600	36.373	-B450	13I34	forced	37
450	91	259	91	1.5	37.000	25.294	-B450	17N23	natural	31
450	90	172	90	2.1	8.500	45.245	-B450	13I41	natural	31
450	88	145	88	2.8	20.000	22.813	-B450	14L20	natural	31
450	85	241	85	1.6	8.600	40.330	-B450	13I34	forced	37
450	85	405	85	1.1	37.000	19.831	-B450	17N17	forced	37
450	82	226	82	1.9	20.000	19.831	-B450	14L16	forced	37
450	81	191	81	1.9	8.500	50.167	-B450	13I41	natural	31
450	79	95	79	3.9	2.600	50.167	-B450	10I40	natural	31
450	79	161	79	2.5	20.000	25.294	-B450	14L20	natural	31
450	75	271	75	1.4	8.500	45.245	-B450	13I34	forced	37
450	72	178	72	2.3	20.000	27.945	-B450	14L20	natural	31
450	72	260	72	1.7	20.000	22.813	-B450	14L16	forced	37
450	70	107	70	3.5	2.900	56.154	-B450	10I40	natural	31
450	68	300	68	1.3	8.500	50.167	-B450	13I34	forced	37
450	65	197	65	2.1	20.000	30.985	-B450	14L20	natural	31
450	65	288	65	1.5	20.000	25.294	-B450	14L16	forced	37
450	63	118	63	3.1	2.900	62.262	-B450	10I40	natural	31
450	59	319	59	1.4	20.000	27.945	-B450	14L16	forced	37
450	57	131	57	2.8	2.800	68.788	-B450	10I40	natural	31
450	53	353	53	1.2	20.000	30.985	-B450	14L16	forced	37
450	52	145	52	2.6	2.800	76.271	-B450	10I40	natural	31
450	45	340	45	1.1	8.500	89.534	-B450	13I41	natural	31
450	44	170	44	2.2	2.600	89.534	-B450	10I40	natural	31
450	40	189	40	2.0	2.600	99.274	-B450	10I40	natural	31
450	36	212	36	1.9	2.600	111.372	-B450	10I40	natural	31
450	36	357	36	1.3	20.000	56.154	-B450	14L20	natural	31
450	32	235	32	1.8	2.600	123.487	-B450	10I40	natural	31
450	32	396	32	1.1	20.000	62.262	-B450	14L20	natural	31
450	29	438	29	1.0	20.000	68.788	-B450	14L20	natural	31
450	27	274	27	1.5	2.500	144.128	-B450	10I40	natural	31
450	25	304	25	1.4	2.500	159.807	-B450	10I40	natural	31
450	23	332	23	1.2	2.500	174.919	-B450	10I40	natural	31
450	20	368	20	1.1	2.500	193.948	-B450	10I40	natural	31



Dimensions, notes

Notes on the dimensions

The following legend shows the layout of the dimension sheets.

Product gearbox

g500-B110

Driven shaft design

Abmessungen mit Hohlwelle

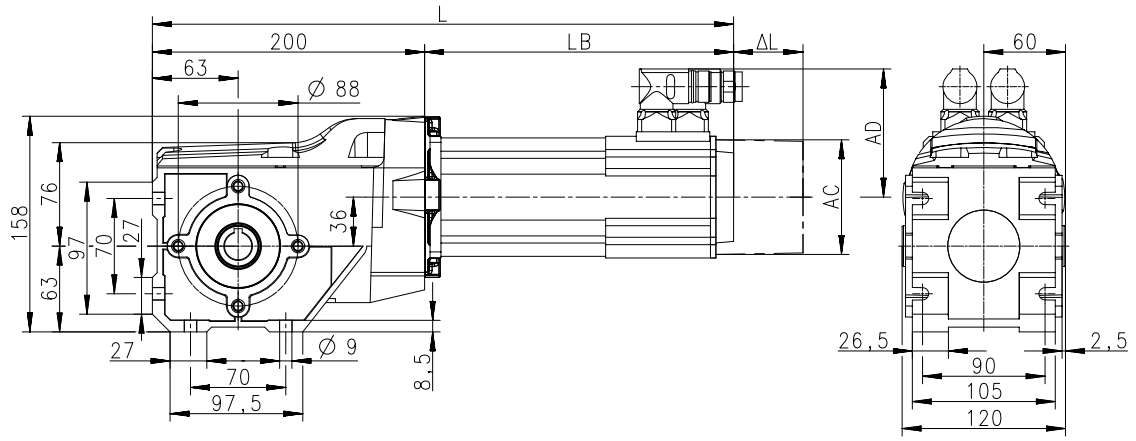

Product Motor

Produkt			MCS					
			06C41	06F41	06I41	09D41	09F38	09H41
Abmessungen								
Gesamtlänge	**L**	**[mm]**	~~331~~	361	391	384	404	424
Länge Motor	**LB**	**[mm]**	~~131.4~~	161.4	191.4	183.9	203.9	223.9
Länge Motoranbauten	**Δ L**	**[mm]**	100			71		
Motordurchmesser	**AC**	**[mm]**	86			89		
Abstand Motor/Anschluss	**AD**	**[mm]**	77			89.7		

Distance of motor centre to the end of connector

Total length of the drive without built-on accessories

Motor diameter

Motor length without built-on accessories

Additional length of the built-on accessories (longest version)



Dimensions, self-ventilated motors

g500-B110

Dimensions with hollow shaft

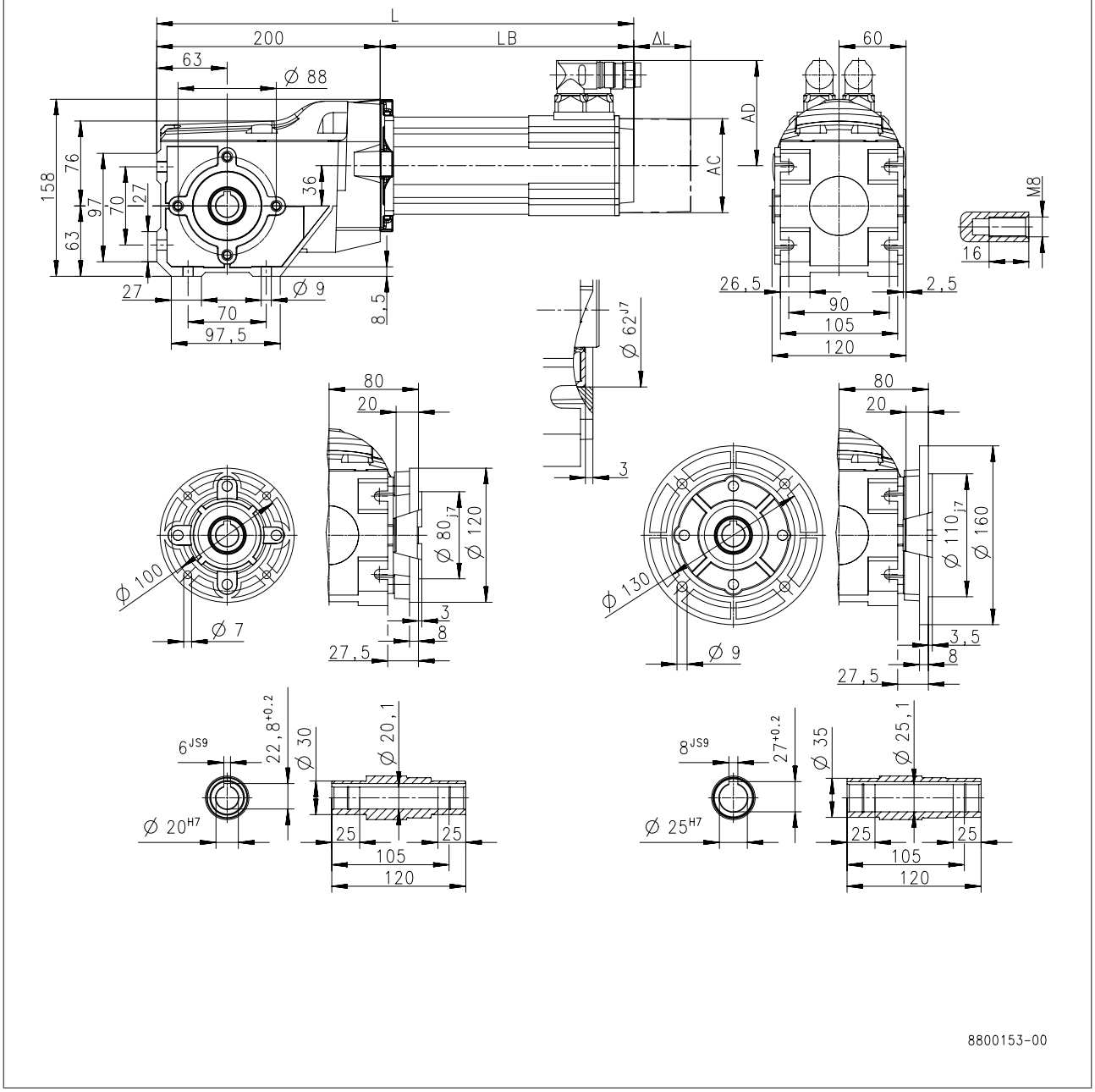

Product			MCA	
			10I40	13I41
Dimensions				
Total length	**L**	**[mm]**	459	468
Motor length	**LB**	**[mm]**	259	267.5
Length of motor options	**Δ L**	**[mm]**	78.5	89
Motor diameter	**AC**	**[mm]**	102	130
Distance motor/connection	**AD**	**[mm]**	90	102



Dimensions, self-ventilated motors

g500-B110

Dimensions with solid shaft

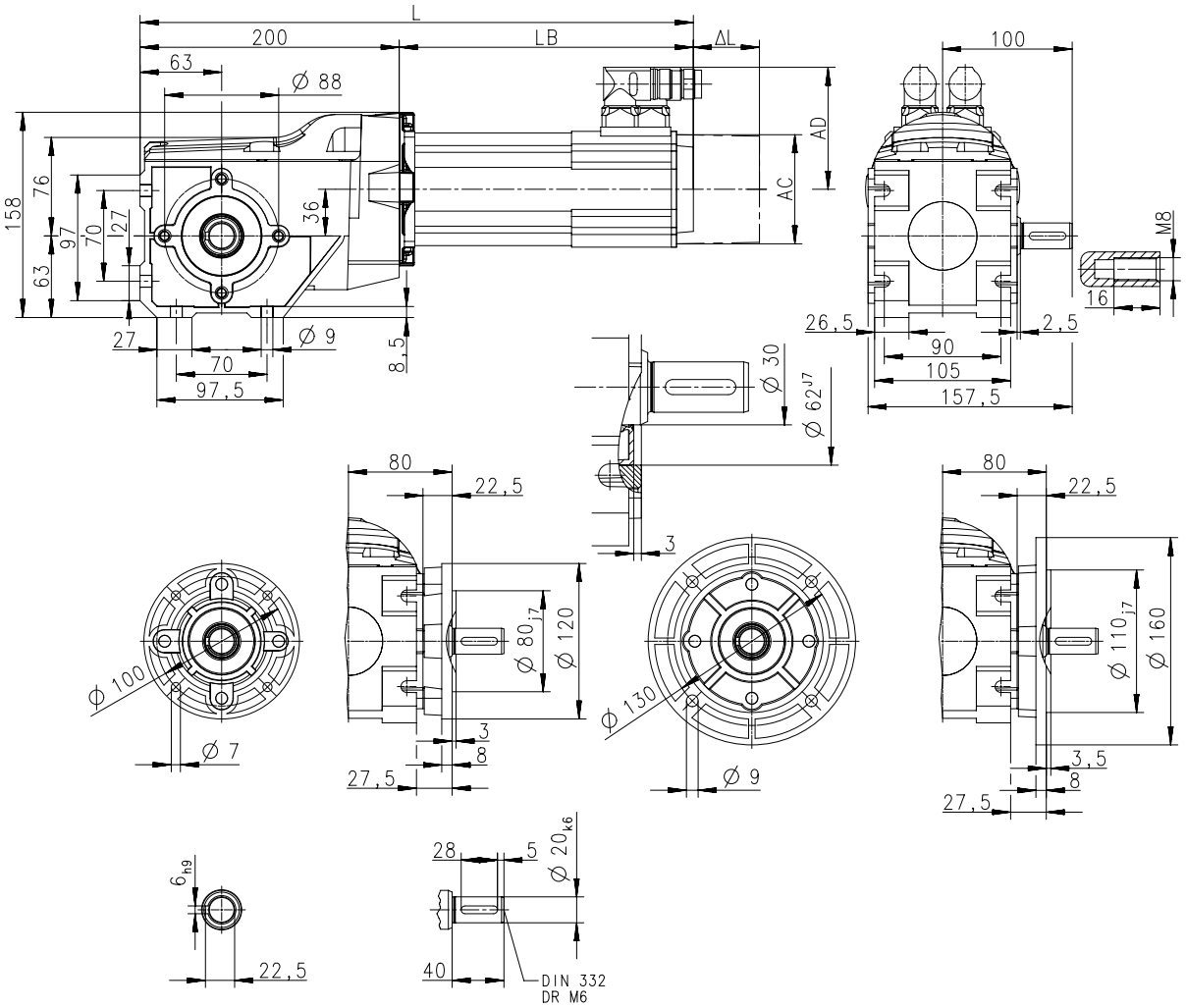

Product			MCA	
			10I40	13I41
Dimensions				
Total length	**L**	**[mm]**	459	468
Motor length	**LB**	**[mm]**	259	267.5
Length of motor options	**Δ L**	**[mm]**	78.5	89
Motor diameter	**AC**	**[mm]**	102	130
Distance motor/connection	**AD**	**[mm]**	90	102



Dimensions, self-ventilated motors

g500-B110

Dimensions with shrink disc

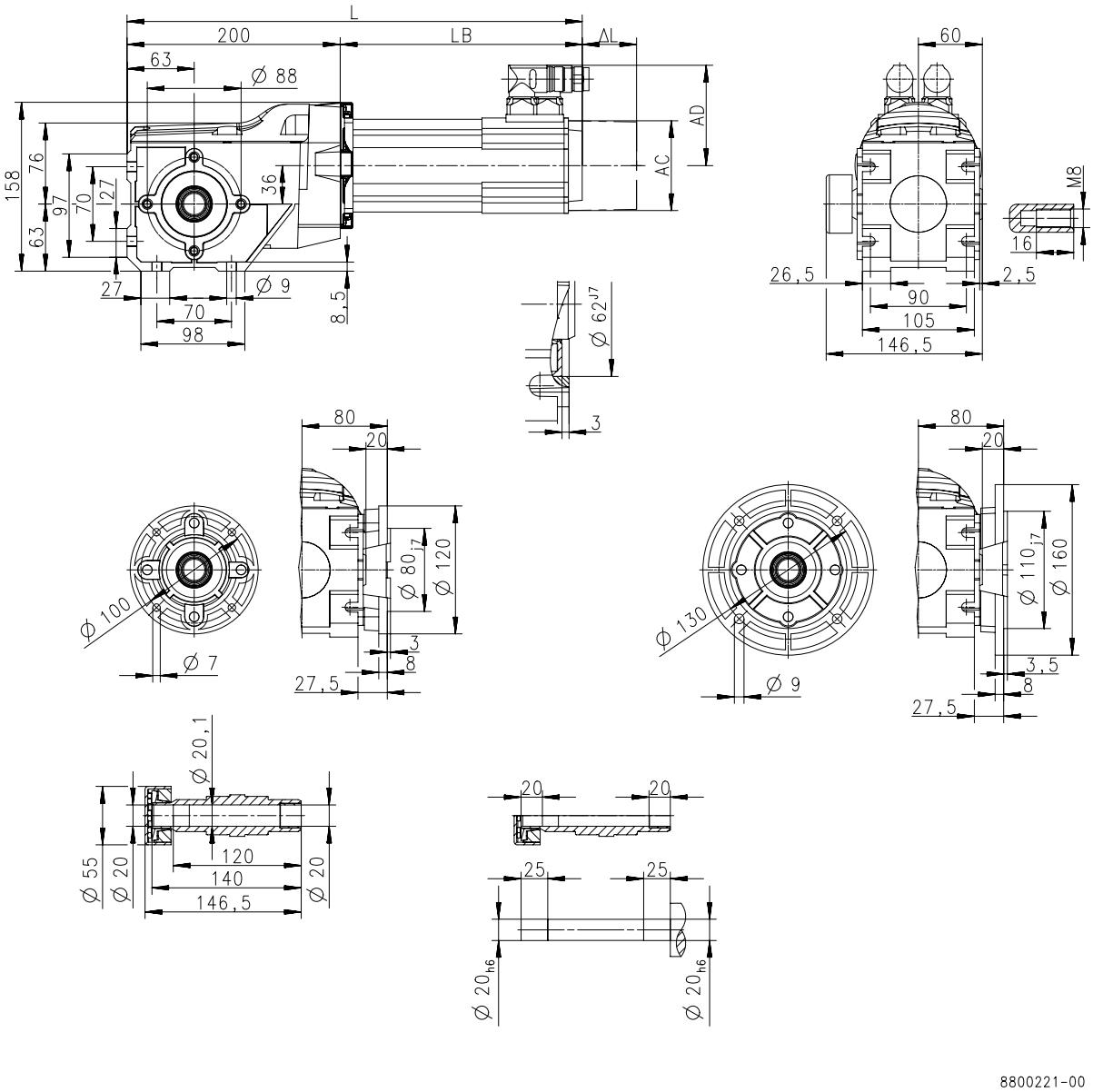

Product			MCA	
			10I40	13I41
Dimensions				
Total length	**L**	**[mm]**	459	468
Motor length	**LB**	**[mm]**	259	267.5
Length of motor options	**Δ L**	**[mm]**	78.5	89
Motor diameter	**AC**	**[mm]**	102	130
Distance motor/connection	**AD**	**[mm]**	90	102

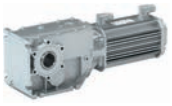

Dimensions, self-ventilated motors

g500-B240

Dimensions with hollow shaft

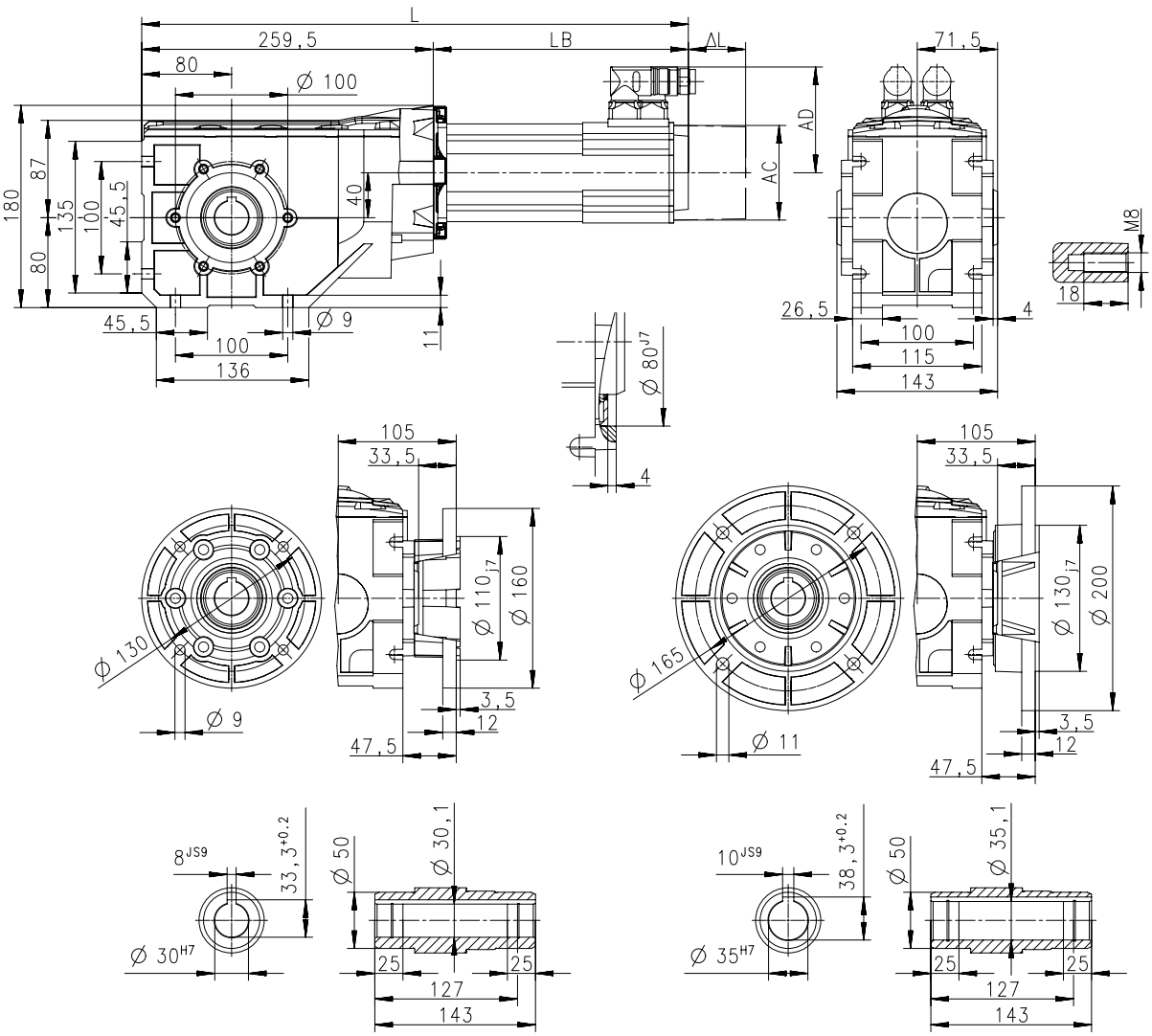

Product			MCA		
			10I40	13I41	14L20
Dimensions					
Total length	**L**	**[mm]**	519	527	577
Motor length	**LB**	**[mm]**	259	267.5	317.5
Length of motor options	**Δ L**	**[mm]**	78.5	89	88.5
Motor diameter	**AC**	**[mm]**	102	130	142
Distance motor/connection	**AD**	**[mm]**	90	102	109



Dimensions, self-ventilated motors

g500-B240

Dimensions with solid shaft

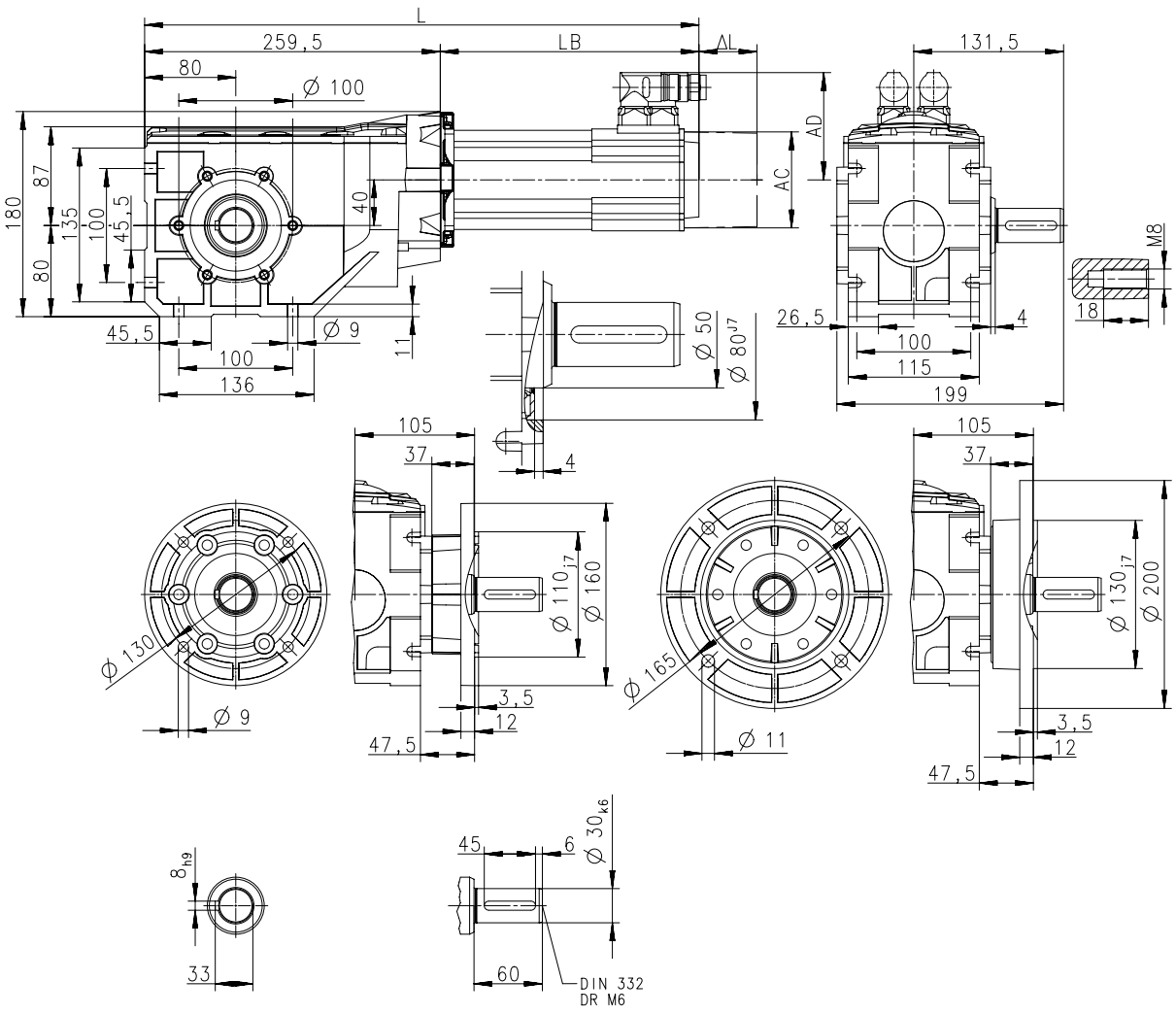

Product			MCA		
			10I40	13I41	14L20
Dimensions					
Total length	**L**	**[mm]**	519	527	577
Motor length	**LB**	**[mm]**	259	267.5	317.5
Length of motor options	**Δ L**	**[mm]**	78.5	89	88.5
Motor diameter	**AC**	**[mm]**	102	130	142
Distance motor/connection	**AD**	**[mm]**	90	102	109

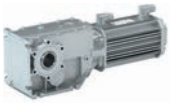

Dimensions, self-ventilated motors

g500-B240

Dimensions with shrink disc

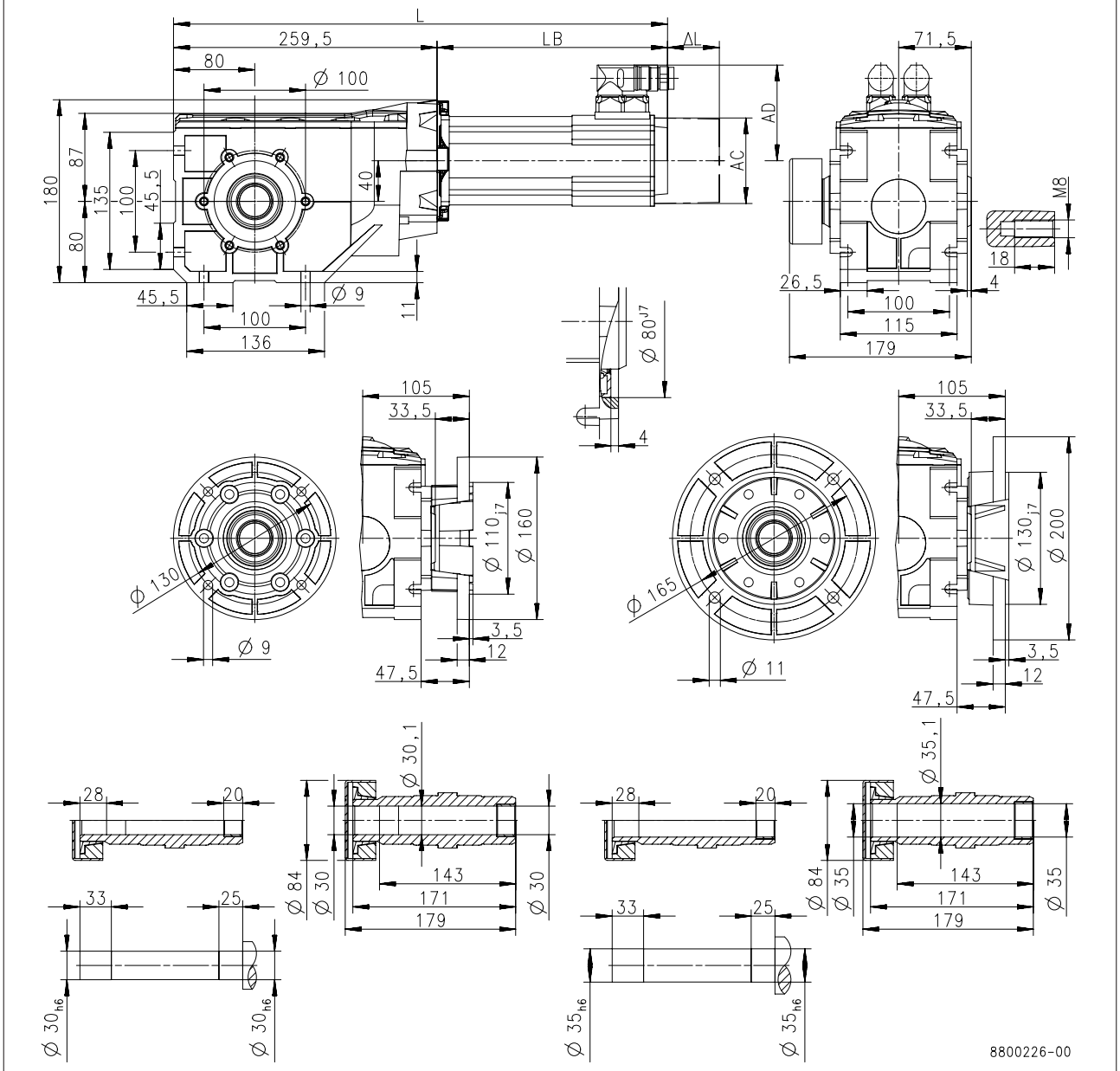

Product			MCA		
			10I40	13I41	14L20
Dimensions					
Total length	**L**	**[mm]**	519	527	577
Motor length	**LB**	**[mm]**	259	267.5	317.5
Length of motor options	**Δ L**	**[mm]**	78.5	89	88.5
Motor diameter	**AC**	**[mm]**	102	130	142
Distance motor/connection	**AD**	**[mm]**	90	102	109



Dimensions, self-ventilated motors

g500-B450

Dimensions with hollow shaft

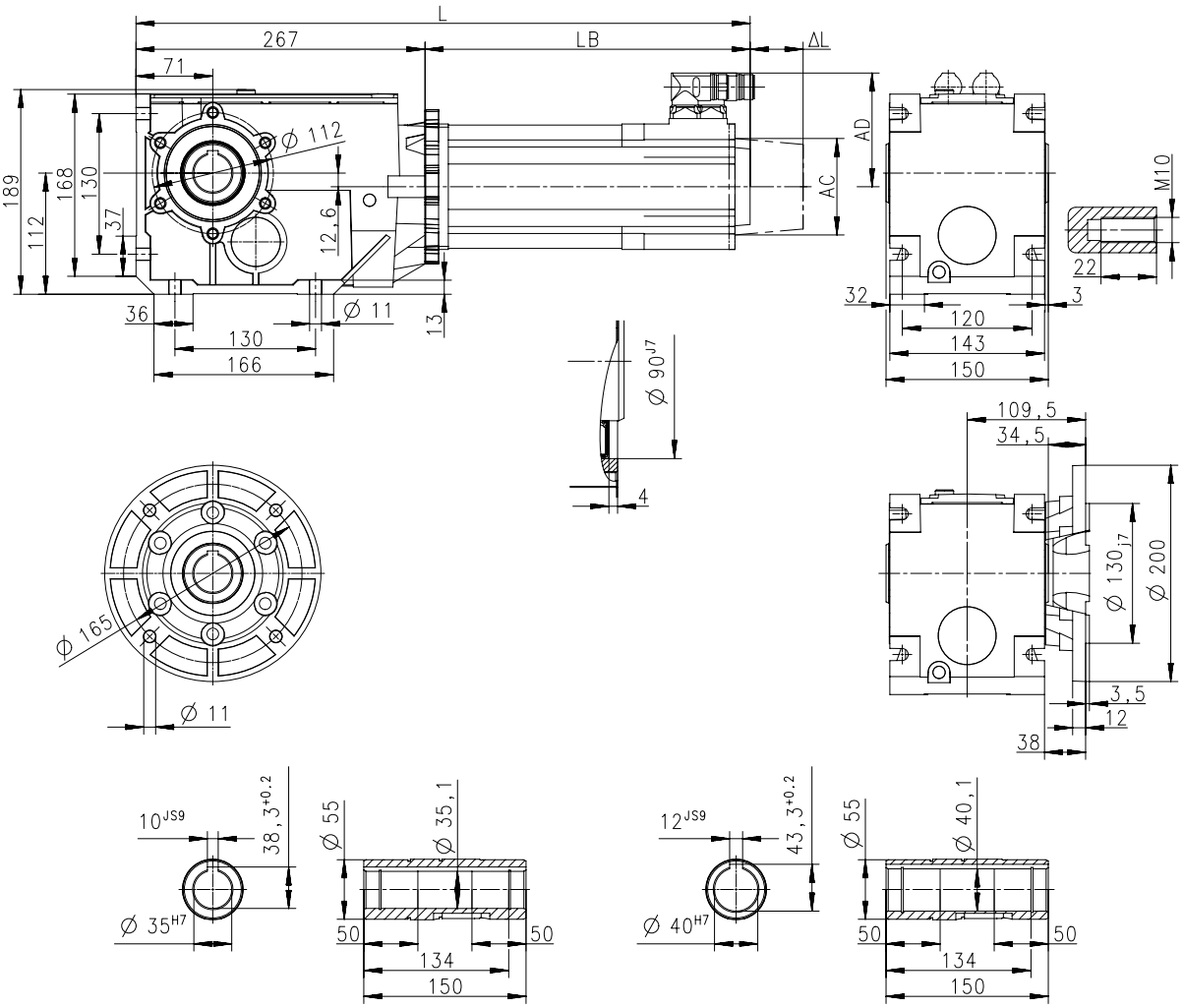

Product			MCA			
			10I40	13I41	14L20	17N23
Dimensions						
Total length	**L**	**[mm]**	526	535	585	624
Motor length	**LB**	**[mm]**	259	267.5	317.5	356.5
Length of motor options	**Δ L**	**[mm]**	78.5	89	88.5	89.2
Motor diameter	**AC**	**[mm]**	102	130	142	165
Distance motor/connection	**AD**	**[mm]**	90	102	109	117.5

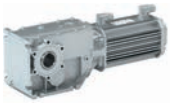

Dimensions, self-ventilated motors

g500-B450

Dimensions with solid shaft

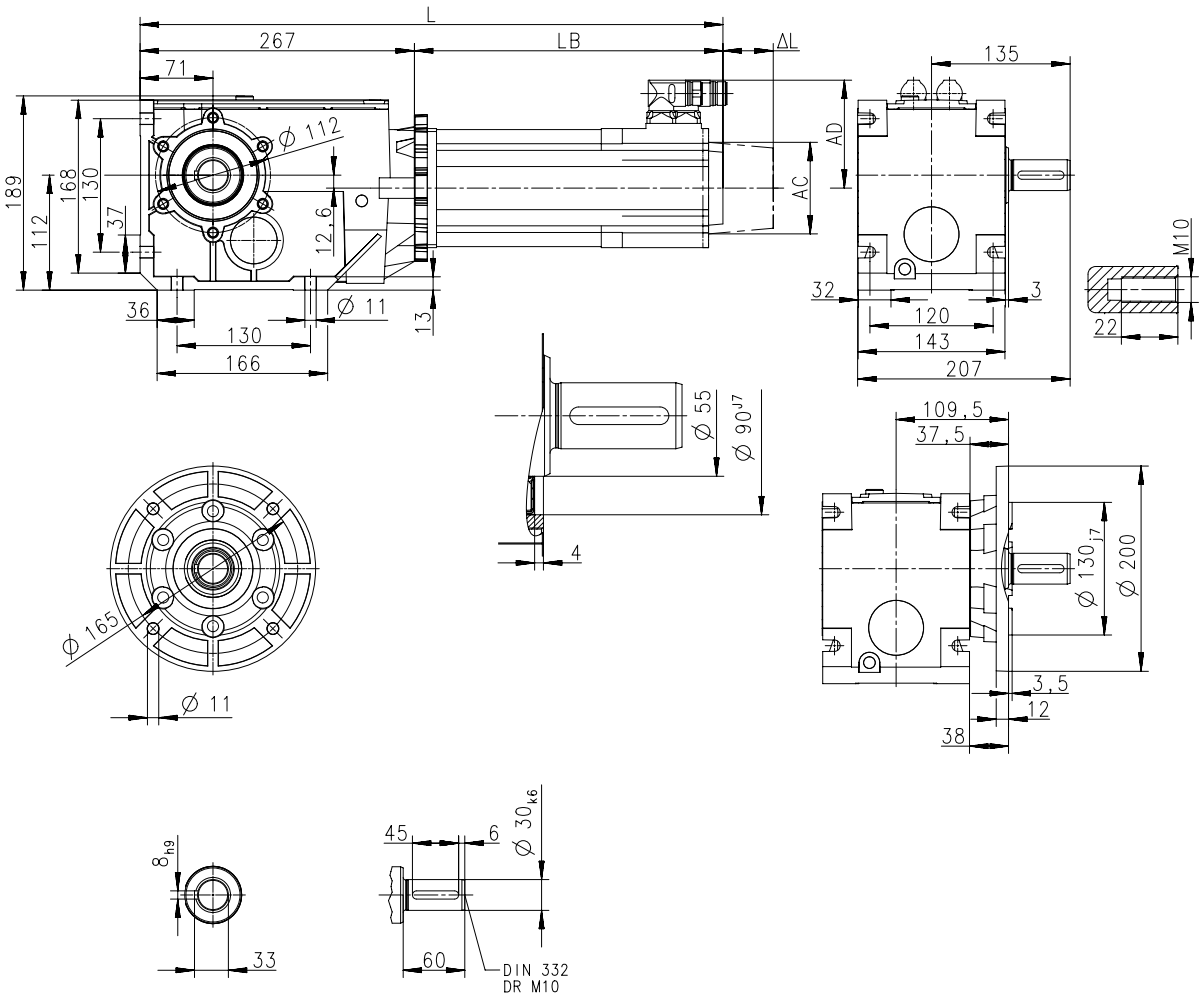

Product			MCA			
			10I40	13I41	14L20	17N23
Dimensions						
Total length	**L**	**[mm]**	526	535	585	624
Motor length	**LB**	**[mm]**	259	267.5	317.5	356.5
Length of motor options	**Δ L**	**[mm]**	78.5	89	88.5	89.2
Motor diameter	**AC**	**[mm]**	102	130	142	165
Distance motor/connection	**AD**	**[mm]**	90	102	109	117.5



Dimensions, self-ventilated motors

g500-B450

Dimensions with shrink disc

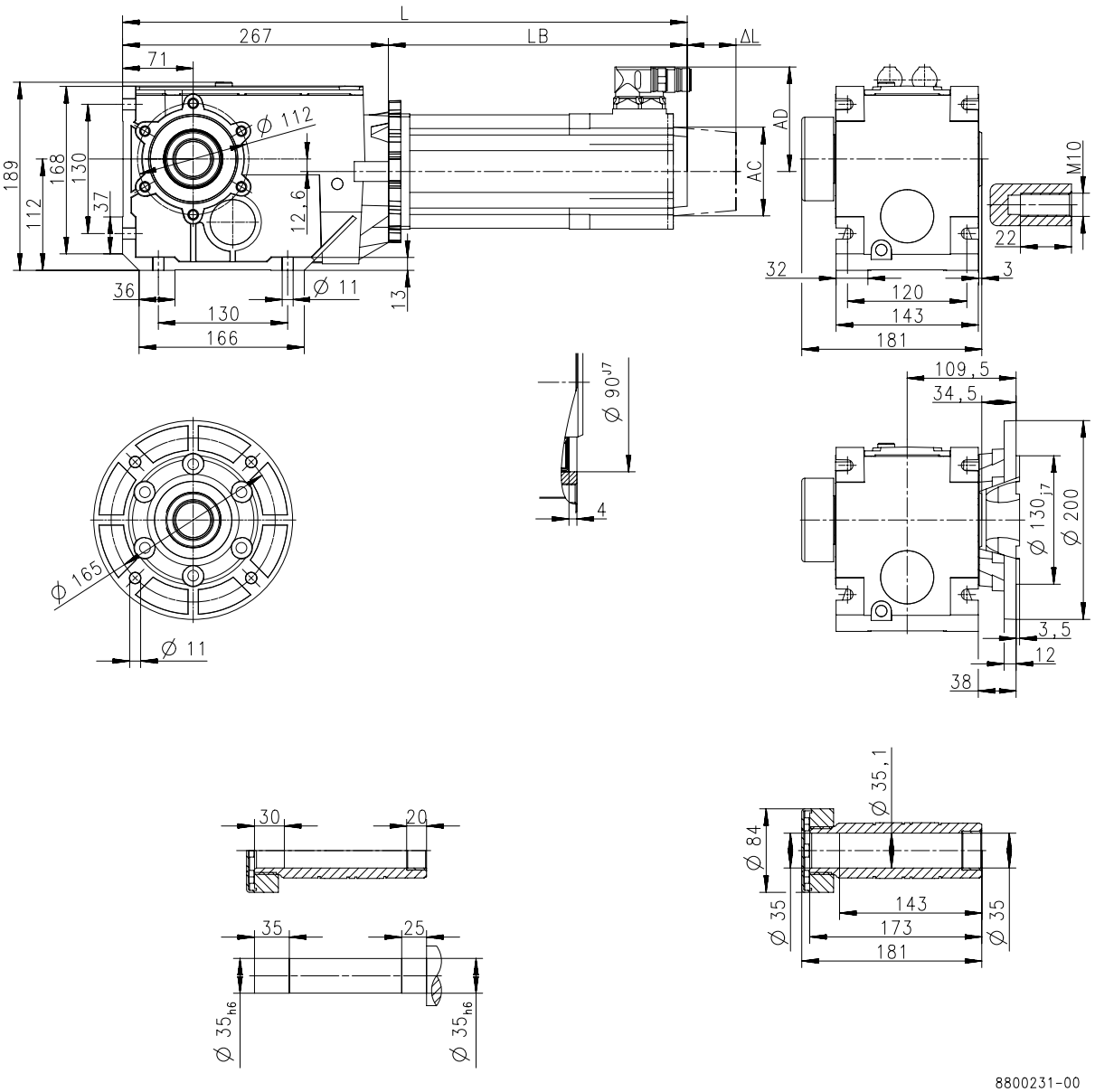

Product			MCA			
			10I40	13I41	14L20	17N23
Dimensions						
Total length	**L**	**[mm]**	526	535	585	624
Motor length	**LB**	**[mm]**	259	267.5	317.5	356.5
Length of motor options	**Δ L**	**[mm]**	78.5	89	88.5	89.2
Motor diameter	**AC**	**[mm]**	102	130	142	165
Distance motor/connection	**AD**	**[mm]**	90	102	109	117.5



Dimensions, forced ventilated motors

g500-B240

Dimensions with hollow shaft

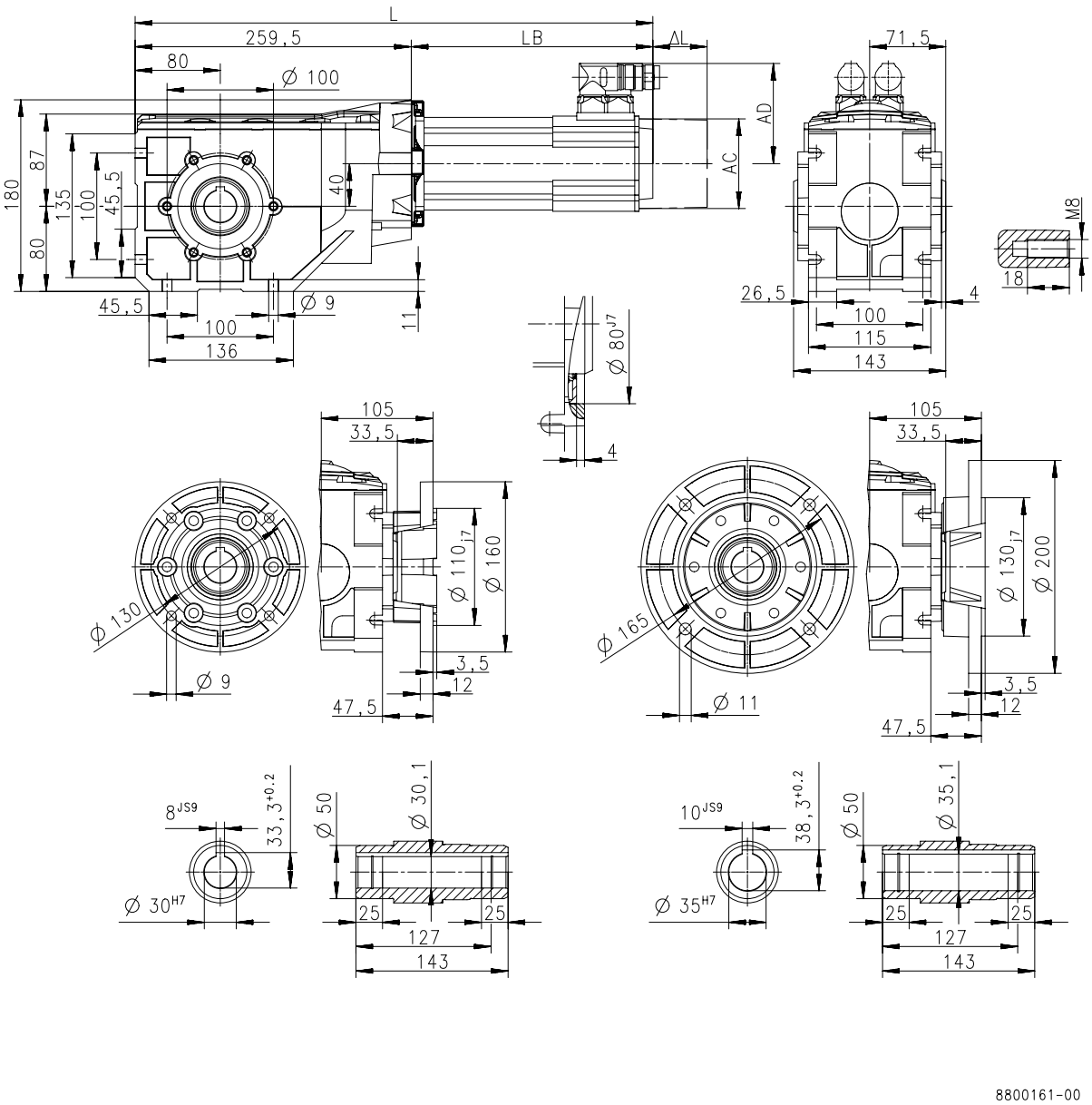

Product			MCA	
			13I34	14L16
Dimensions				
Total length	**L**	**[mm]**	595	639
Motor length	**LB**	**[mm]**	335.5	379.5
Length of motor options	**Δ L**	**[mm]**	89.5	88.5
Motor diameter	**AC**	**[mm]**	130	142
Distance motor/connection	**AD**	**[mm]**	102	109



Dimensions, forced ventilated motors

g500-B240

Dimensions with solid shaft

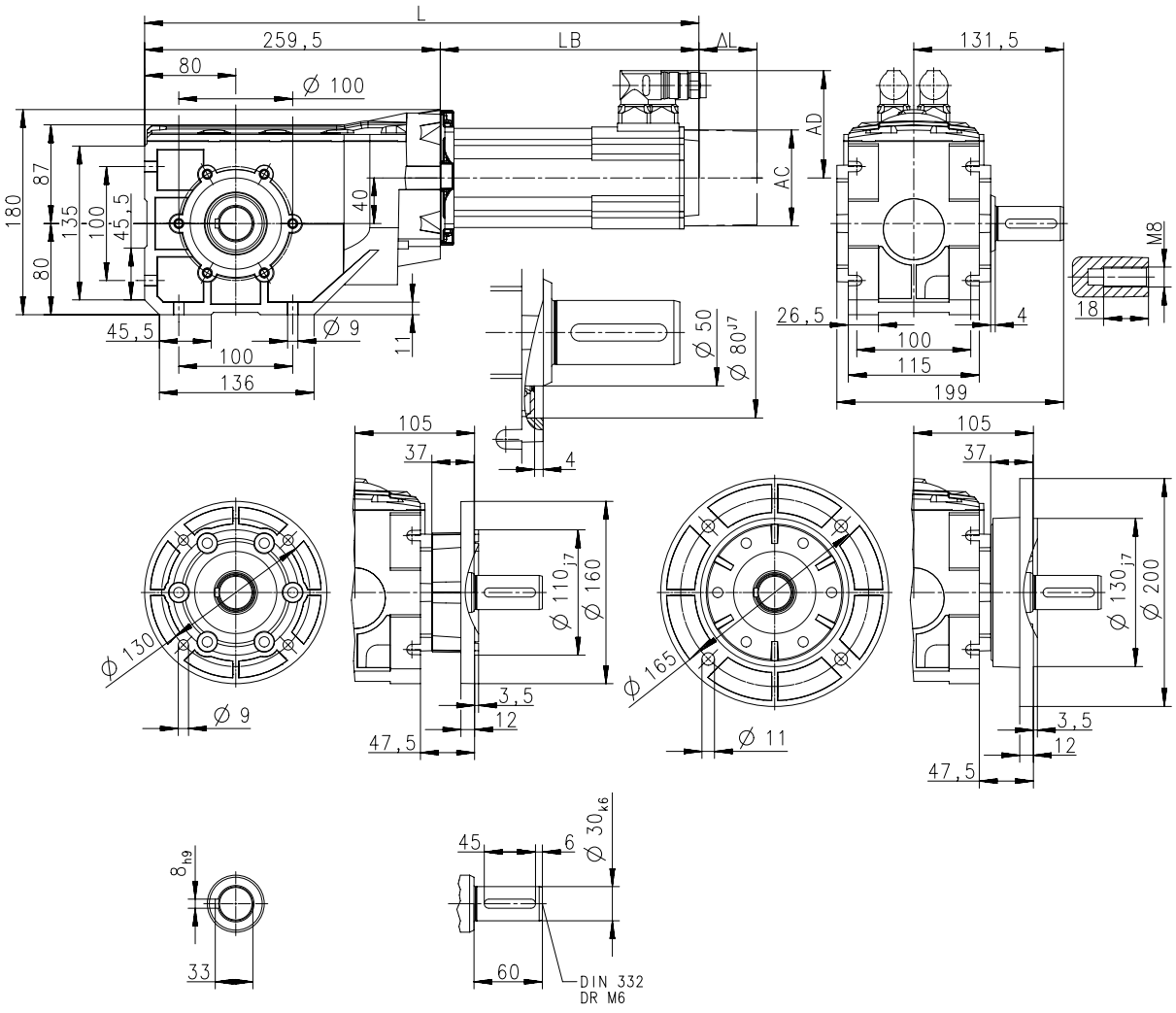

Product			MCA	
			13I34	14L16
Dimensions				
Total length	**L**	**[mm]**	595	639
Motor length	**LB**	**[mm]**	335.5	379.5
Length of motor options	**Δ L**	**[mm]**	89.5	88.5
Motor diameter	**AC**	**[mm]**	130	142
Distance motor/connection	**AD**	**[mm]**	102	109

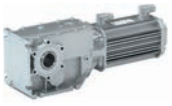

Dimensions, forced ventilated motors

g500-B240

Dimensions with shrink disc

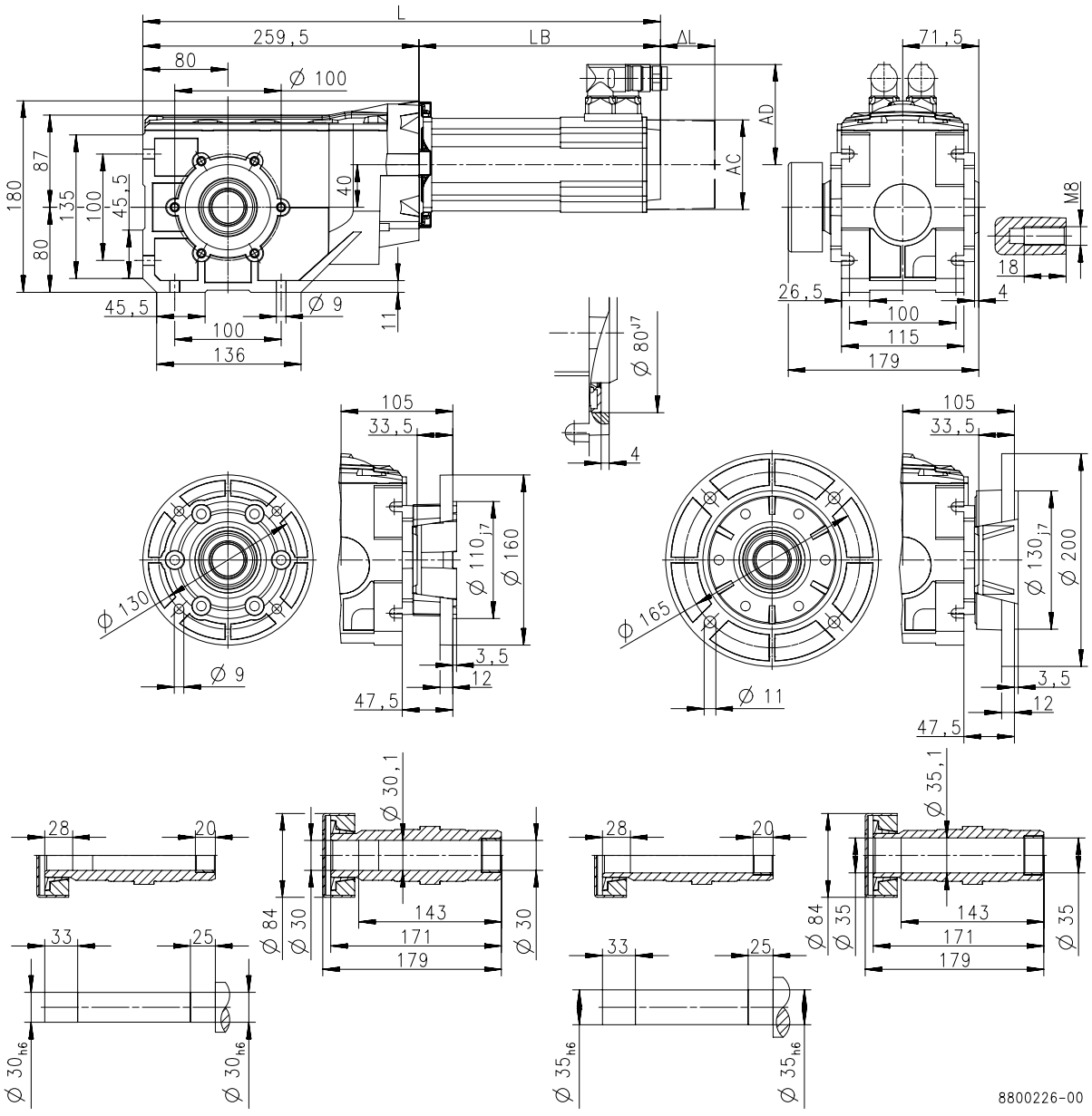

Product			MCA	
			13I34	14L16
Dimensions				
Total length	**L**	**[mm]**	595	639
Motor length	**LB**	**[mm]**	335.5	379.5
Length of motor options	**Δ L**	**[mm]**	89.5	88.5
Motor diameter	**AC**	**[mm]**	130	142
Distance motor/connection	**AD**	**[mm]**	102	109



Dimensions, forced ventilated motors

g500-B450

Dimensions with hollow shaft

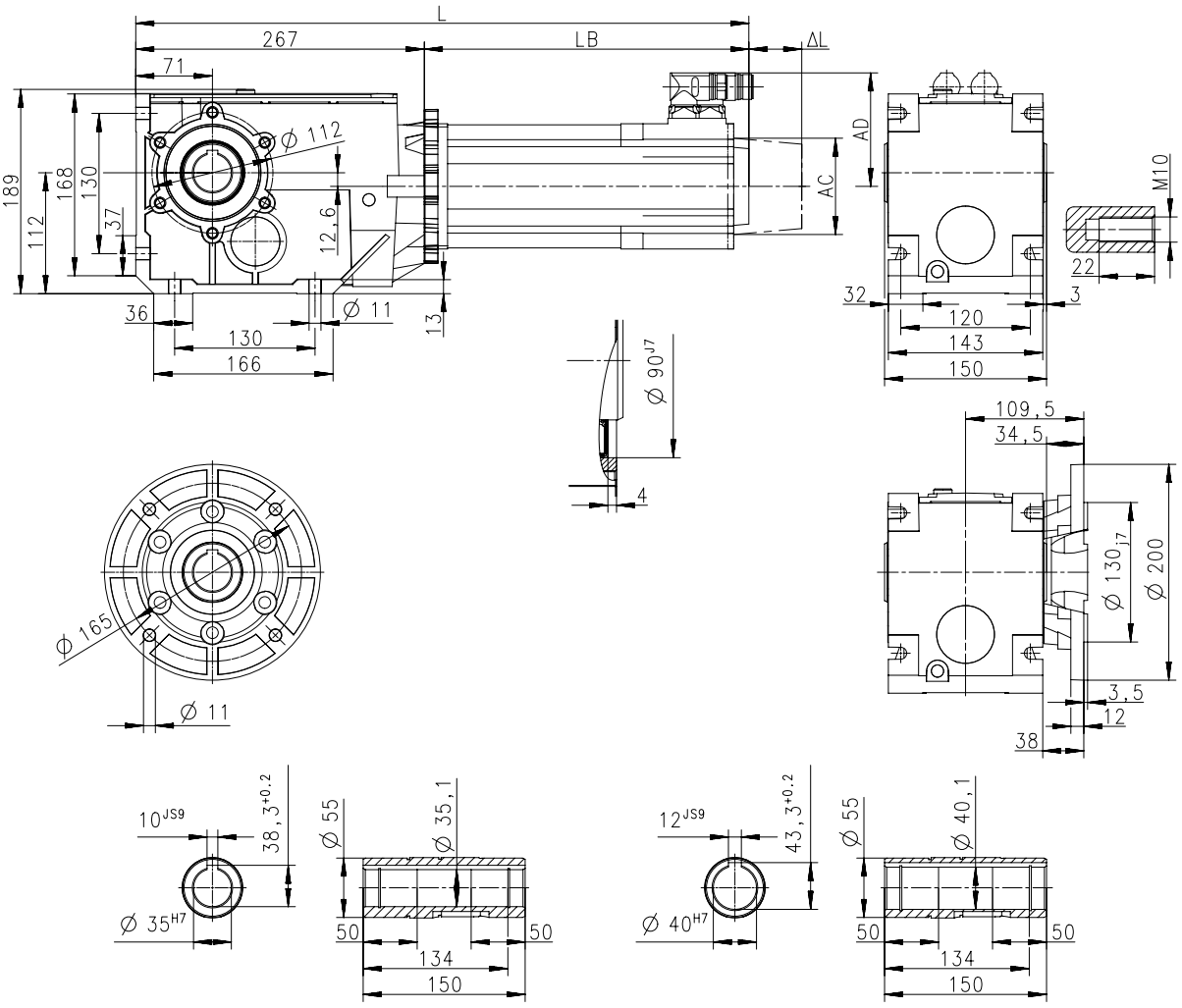

Product			MCA			
			13I34	14L16	14L35	17N17
Dimensions						
Total length	**L**	**[mm]**	603	647		710
Motor length	**LB**	**[mm]**	335.5	379.5		442.5
Length of motor options	**Δ L**	**[mm]**	89.5	88.5		89
Motor diameter	**AC**	**[mm]**	130	142		165
Distance motor/connection	**AD**	**[mm]**	102	109		117.5

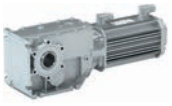

Dimensions, forced ventilated motors

g500-B450

Dimensions with solid shaft

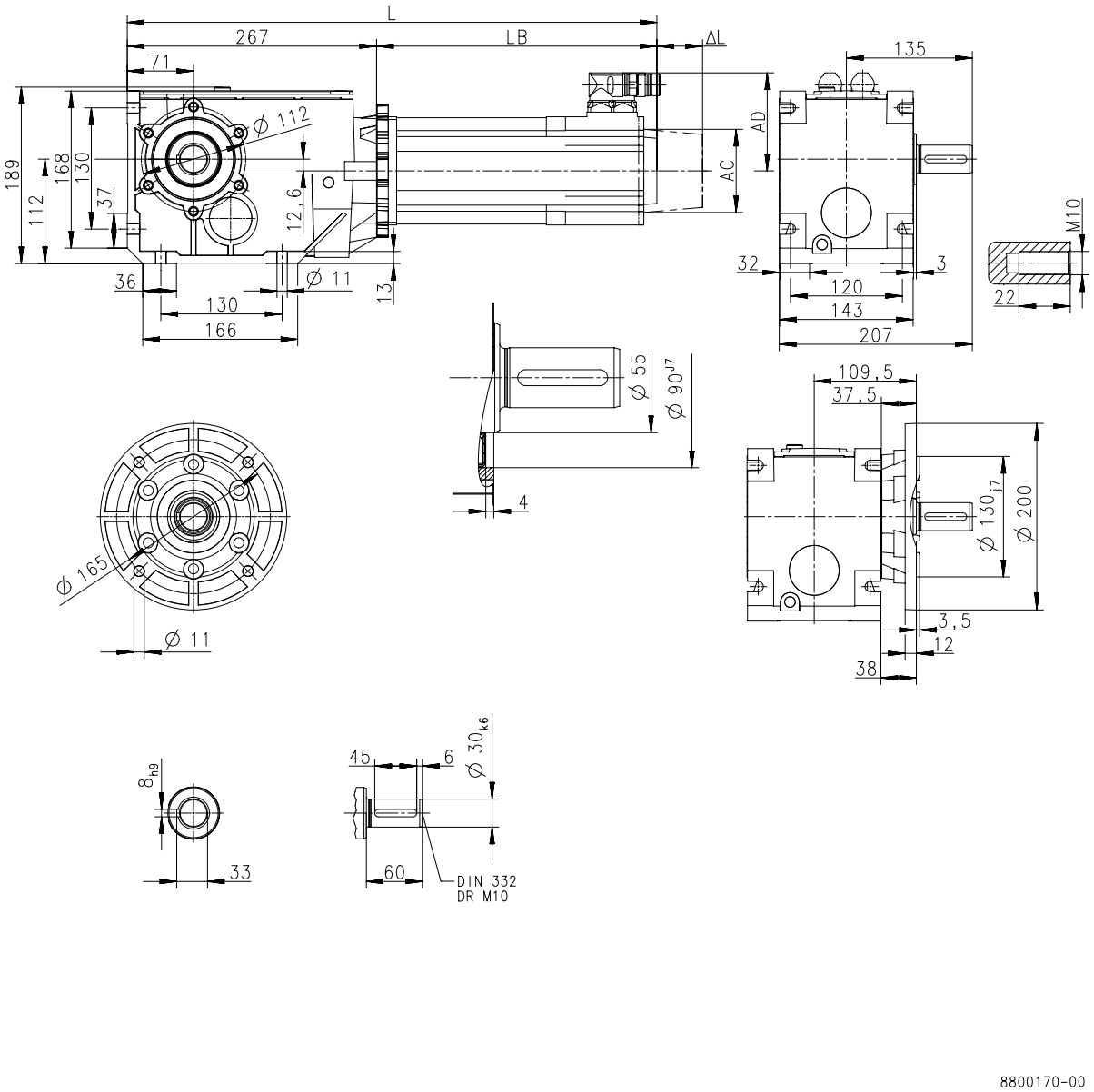

Product			MCA			
			13I34	14L16	14L35	17N17
Dimensions						
Total length	**L**	**[mm]**	603	647		710
Motor length	**LB**	**[mm]**	335.5	379.5		442.5
Length of motor options	**Δ L**	**[mm]**	89.5	88.5		89
Motor diameter	**AC**	**[mm]**	130	142		165
Distance motor/connection	**AD**	**[mm]**	102	109		117.5



Dimensions, forced ventilated motors

g500-B450

Dimensions with shrink disc

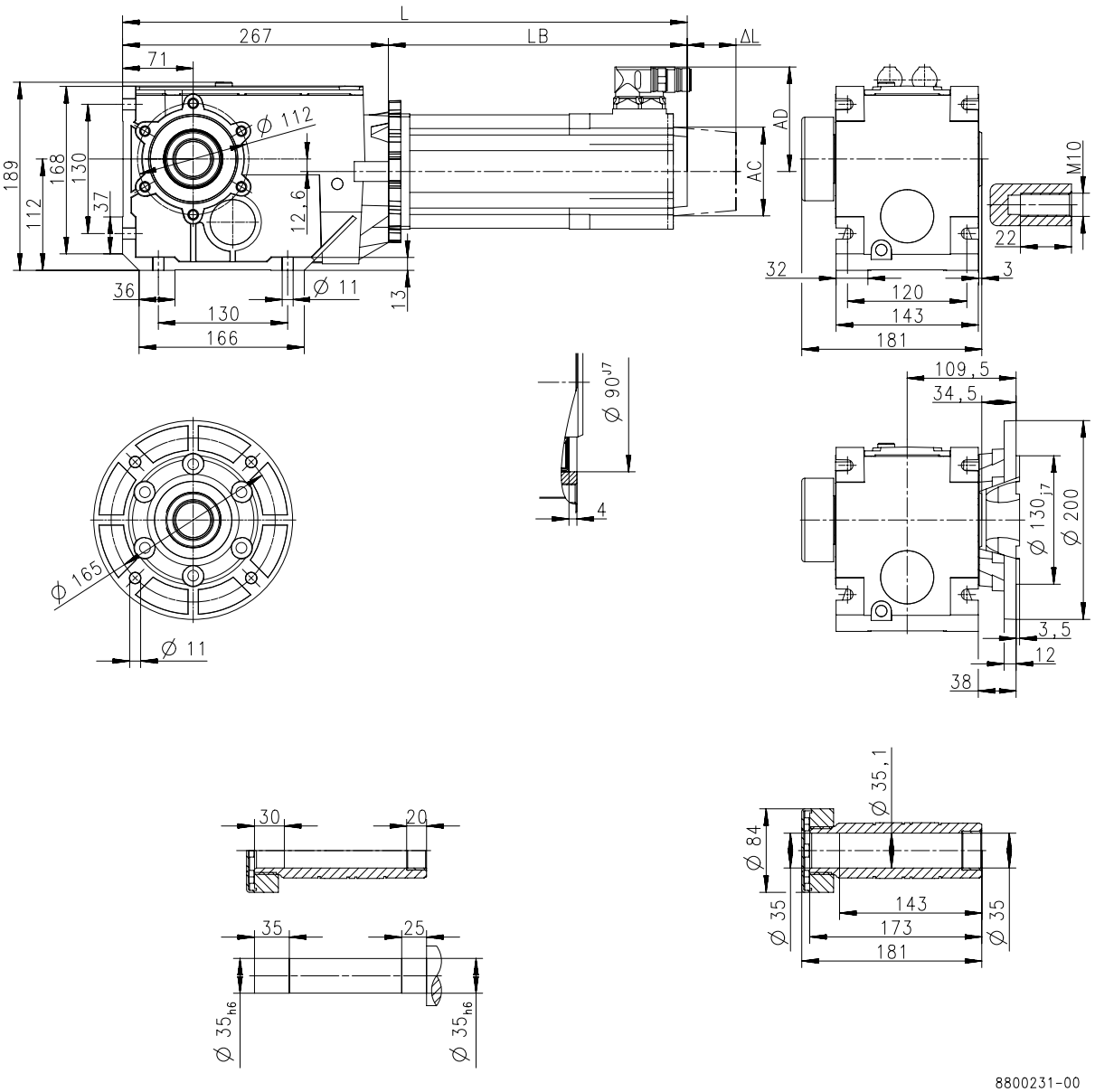

Product			MCA			
			13I34	14L16	14L35	17N17
Dimensions						
Total length	**L**	**[mm]**	603	647		710
Motor length	**LB**	**[mm]**	335.5	379.5		442.5
Length of motor options	**Δ L**	**[mm]**	89.5	88.5		89
Motor diameter	**AC**	**[mm]**	130	142		165
Distance motor/connection	**AD**	**[mm]**	102	109		117.5

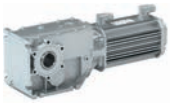

Weights, self-ventilated motors

2-stage gearboxes

				MCA		
				10I40	**13I41**	**14L20**
g500	**-B110**	m	[kg]	11	15	
	-B240	m	[kg]	14	19	23

3-stage gearboxes

				MCA			
				10I40	**13I41**	**14L20**	**17N23**
g500	**-B450**	m	[kg]	18	22	26	34

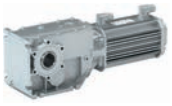

Weights, forced ventilated motors

2-stage gearboxes

				MCA	
				13I34	14L16
g500	-B240	m	[kg]	20	25

3-stage gearboxes

				MCA		
				13I34	14L16 14L35	17N17
g500	-B450	m	[kg]	23	28	37

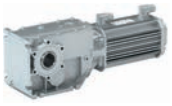

Surface and corrosion protection

For optimum protection of geared motors against ambient conditions, the surface and corrosion protection system (OKS) offers tailor-made solutions.

Various surface coatings combined with other protective measures ensure that the geared motors operate reliably even at high air humidity, in outdoor installations or in the presence of atmospheric impurities. Any colour from the RAL Classic collection can be chosen for the top coat. The geared motors are also available unpainted (no surface and corrosion protection).

Surface and corrosion protection	Applications	Measures
OKS-G (primed)	• Dependent on subsequent top coat applied	• 2K PUR priming coat (grey) • Zinc-coated screws • Rust-free breather elements Optional measures • Stainless steel nameplate
OKS-S (small)	• Standard applications • Internal installation in heated buildings • Air humidity up to 90%	• Surface coating as per corrosivity category C1 (in line with EN 12944-2) • Zinc-coated screws • Rust-free breather elements Optional measures • Stainless steel nameplate
OKS-M (medium)	• Internal installation in non-heated buildings • Covered, protected external installation • Air humidity up to 95%	• Surface coating as per corrosivity category C2 (in line with EN 12944-2) • Zinc-coated screws • Rust-free breather elements Optional measures • Stainless steel shaft • Stainless steel nameplate • Rust-free shrink disc (on request)
OKS-L (large)	• External installation • Air humidity above 95% • Chemical industry plants • Food industry	• Surface coating as per corrosivity category C3 (in line with EN 12944-2) • Blower cover and B end shield additionally primed • Cable glands with gaskets • Corrosion-resistant brake with cover ring, stainless friction plate, and chrome-plated armature plate (on request) • All screws/screw plugs zinc-coated • Stainless breather elements • Threaded holes that are not used are closed by means of plastic plugs Optional measures • Sealed recesses on motor (on request) • Stainless steel shaft • Stainless steel nameplate • Rust-free shrink disc (on request) • Additional priming coat on cast iron fan • Oil expansion tank and torque plates painted separately and supplied loose

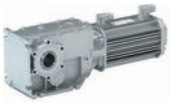

Surface and corrosion protection

Structure of surface coating

Surface and corrosion protection	Corrosivity category	Surface coating	Colour
	DIN EN ISO 12944-2	Structure	
Without OKS(uncoated)		Dipping primed gearbox	
OKS-G (primed)		Dipping primed gearbox 2K PUR priming coat	
OKS-S (small)	C1	Dipping primed gearbox 2K-PUR top coat	Standard: RAL 7012 Optional: RAL Classic
OKS-M (medium)	C2	Dipping primed gearbox 2K PUR priming coat 2K-PUR top coat	
OKS-L (large)	C3		

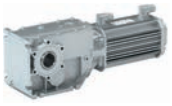

g500-B bevel gearboxes

45 to 450 Nm

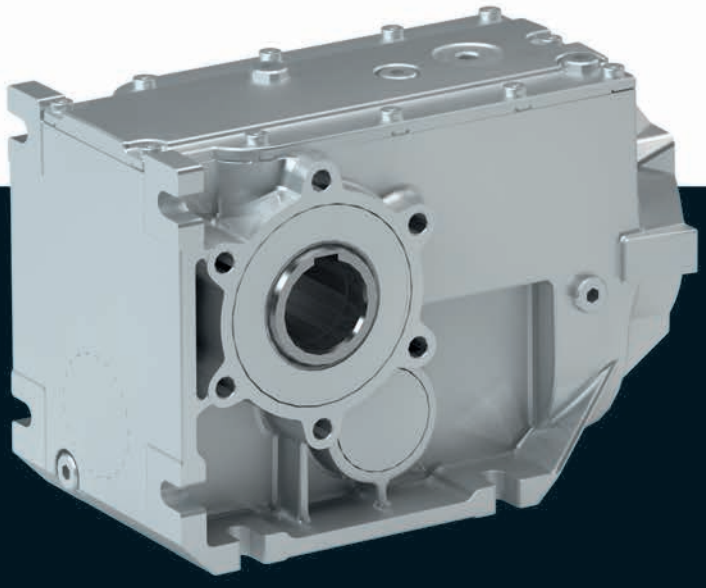

g500-B bevel gearbox

Contents

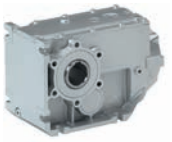

General information	List of abbreviations	6.7 - 5
	Product information	6.7 - 6
	Equipment	6.7 - 7
	The gearbox kit	6.7 - 8
	Functions and features	6.7 - 10
	Lubricants	6.7 - 11
	Ventilation	6.7 - 12
Technical data	Permissible radial and axial forces at output	6.7 - 15
	Moments of inertia	6.7 - 17
	Additional weights for gearboxes	6.7 - 19
Accessories	Torque plate	6.7 - 21
	Shaft cover	6.7 - 26

Contents

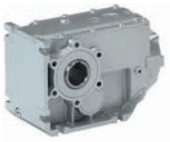

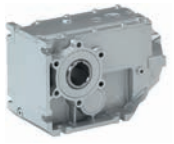

List of abbreviations

$F_{ax,max}$	[N]	Max. axial force
$F_{rad,max}$	[N]	Max. radial force
i		Ratio
J	[kgcm²]	Moment of inertia
m	[kg]	Mass

g500-B bevel gearbox

General information

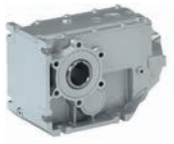

Product information

The efficient bevel gearboxes feature high reliable radial forces, closely stepped gear reductions and a low backlash. They are available in 2-pole and 3-pole design with a torque up to 450 Nm and a ratio of up to i= 360.

Versions

- High-efficient right-angle gearbox in a compact design for space-saving installation
- Standardised shaft and flange dimensions for an easy machine integration
- Low backlash and high torsional stiffness provide for exact results in positioning applications

The product name

Gearbox type	Product range		Design	Rated torque [Nm]	Product
Bevel gearbox	g500	-	B	45	g500-B45
				110	g500-B110
				240	g500-B240
				450	g500-B450

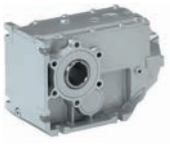

Equipment

Overview

The equipment includes all the options available as standard and all the built-on accessories of the product.

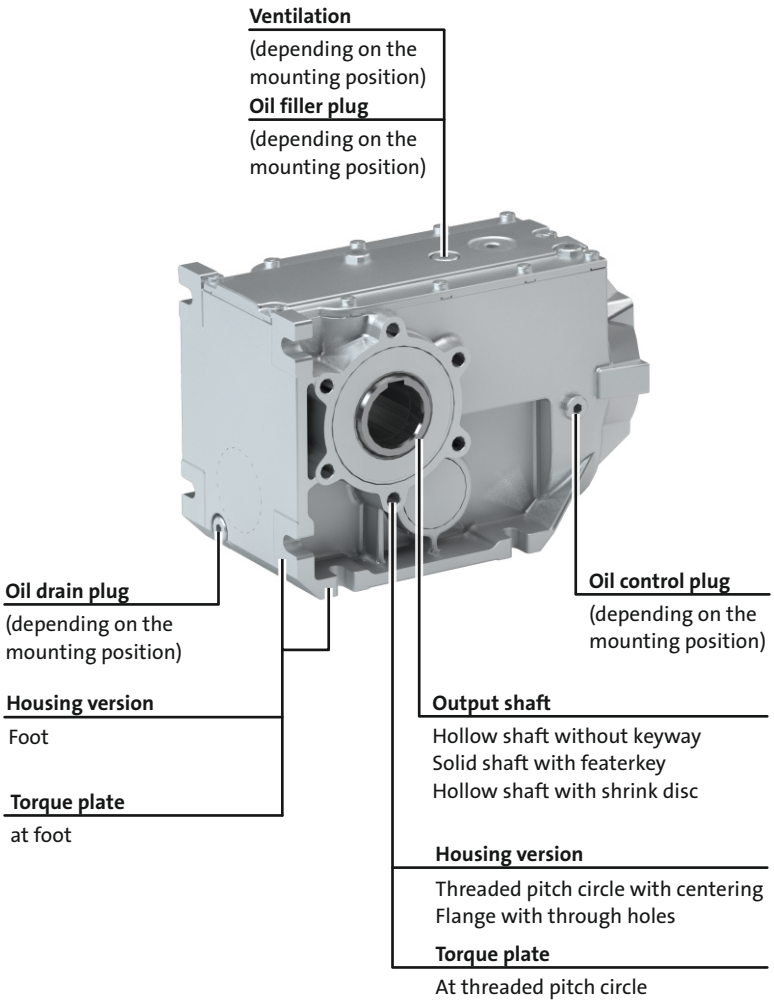

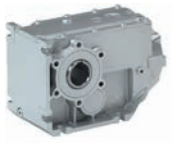

The gearbox kit

Gearbox details

Product	g500-B45	g500-B110	g500-B240	g500-B450
Driven shaft				
Solid shaft without keyway [mm]				
Solid shaft with featherkey [mm]	20x40		30x60	
Hollow shaft with keyway [mm]	18/20	20/25	30/35	35/40
Hollow shaft with shrink disc [mm]	20		30/35	35
Design	Standard stainless steel			
Gasket	Standard FPM (Viton)			
Bearing	Standard			
Fitting grease	Not enclosed Enclosed			
Housing				
Housing version	With foot With foot and centering			
Output flange				
flange diameter [mm]	110/120	120/160	160/200	200
Lubricant				
Type	CLP 460 [1)] CLP HC 320 CLP HC 220 CLP HC 220 USDA H1			
Oil-level inspection	Without inspection			Without inspection With inspection
Breather element	Without			Standard mounting position: Mounted Combined mounting position: loosely enclosed
Backlash				
Backlash	Standard			
Accessories				
Torque plate	Rubber buffers At threaded pitch circle	At threaded pitch circle	At threaded pitch circle At foot	At foot
Shaft cover	Hollow shaft Shrink disc: Rotating cover Shrink disc: Fixed cover			

6.7

[1)] Not suitable for geared servo motors.

► Further information and installation feasibilities can be found in the Gearboxes chapter.



The gearbox kit

Gearbox details

Solid shaft



Foot mounting
without centring



Foot mounting
With centering



Flange with through holes

Hollow shaft



Foot mounting
without centring



Foot mounting
With centering



Flange with through holes

Hollow shaft with shrink disc



Foot mounting
without centring



Foot mounting
With centering

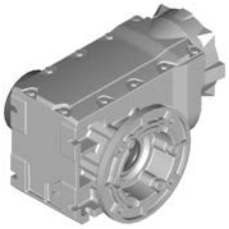

Flange with through holes

Accessories



2nd output shaft end



Torque plate
at foot



Torque plate
at threaded pitch circle

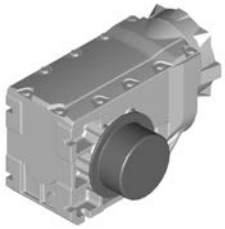

Cover
Hollow shaft/shrink disc

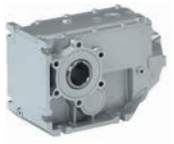

Functions and features

Product	g500-B45	g500-B110	g500-B240	g500-B450
Housing				
Design	Cuboid			
Material	Aluminium			
Solid shaft				
Design	with keyway to DIN 6885			
Tolerance	Shaft diameter ≤ 50 mm: k6 Shaft diameter > 50 mm: m6			
Material	Tempered steel C45 Nirosta X46Cr13			
Hollow shaft				
Design	With keyway Without keyway (for shrink disc)			
Tolerance	Bore H7			
Material	Tempered steel C45 Nirosta X46Cr13			
Toothed parts				
Design	Ground tooth flanks Optimised tooth flank geometry			
Material	Case-hardened steel			
Shaft-hub joint				
	1st and 2nd step: Force-fit 3rd step: positive-fit			
Shaft sealing rings				
Design	With dust lip			
Material	NB / FP			
Bearing				
Design	Ball bearing / tapered-roller bearing depending on size and design			
Lubricants				
	Standard: mineral oil Optional: synthetic oil [1]			
Quantities	Corresponding to mounting position (see nameplate)			
Mechanical efficiency				
2-stage gearboxes [$\eta_{c=1}$]	0.96			
3-stage gearboxes [$\eta_{c=1}$]			0.95	

[1] Standard for geared servo motors.

Direction of rotation

2-stage gearboxes B45 ... B240 3-stage gearbox B450	3-stage gearbox B240
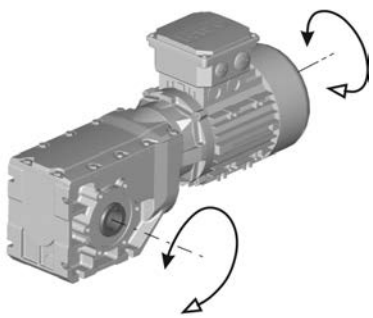	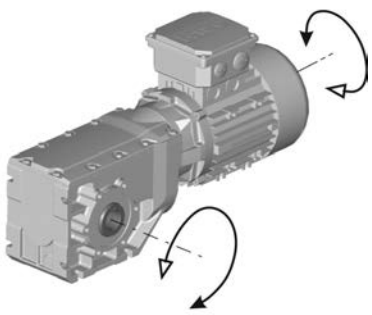

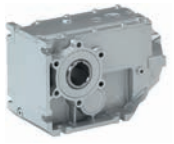

Lubricants

Lenze gearboxes and geared motors are ready for operation on delivery and are filled with lubricants specific to both the drive and the design. The mounting position and design specified in the order are key factors in choosing the volume of lubricant.

The lubricants listed in the lubricant table are approved for use in Lenze drives.

Lubricant table

Mode	CLP 460	CLP HC 320	CLP HC 220 USDA H1
Ambient temperature [°C]	0 ... +40	-25 ... +50	-20 ... +40
Specification	Mineral based oil with additives	Synthetic-based oil (synthetic hydrocarbon / poly-alpha-olefin oil)	
Changing interval	16000 operating hours not later than after three years (oil temperature 70 to 80 °C)	25000 operating hours not later than after three years (oil temperature 70 to 80 °C)	16000 operating hours not later than after three years (oil temperature 70 to 80 °C)
Fuchs	Fuchs Renolin CLP 460	Fuchs Renolin Unisyn CLP 320	bremer & leguil Cassida Fluid GL 220
Klüber	Klüberoil GEM1-460 N	Klübersynth GEM4-320 N	Klüberoil 4 UH1-220 N
Shell	Shell Omala S2 G 460	Shell Omala S4 GX HD 320	

► Please contact your Lenze sales office if you are operating at ambient temperatures in areas up to< -20 °C bzw. > or up to +40°C.

Shaft sealing rings

By default, the gearboxes come with NBR shaft sealing rings at the output end. At high speed and unfavourable ambient conditions as high temperature, reduced circulation of air etc., Lenze recommends the use of Viton shaft sealing rings.

Please consider this in your order.



Ventilation

Non-ventilated gearboxes

No ventilation is required for gearboxes g500-B45 to B240.

Ventilated gearboxes

The g500-B450 gearbox is supplied with a breather element as standard.

Gearboxes in combined mounting position

To reduce the number of different versions, the gearboxes can also be ordered with combined mounting positions.
Depending on the gearbox in question, the following combinations are available:
- g500-B45 in combined mounting position ABCDEF
- g500-B110 ... B450 in combined mounting position AEF

The breather elements are supplied loose.

Ventilation

g500-B240

Breather position, oil filling screw and drain plug

► **A ... F** mounting position

Gearbox g500-B240

A	B
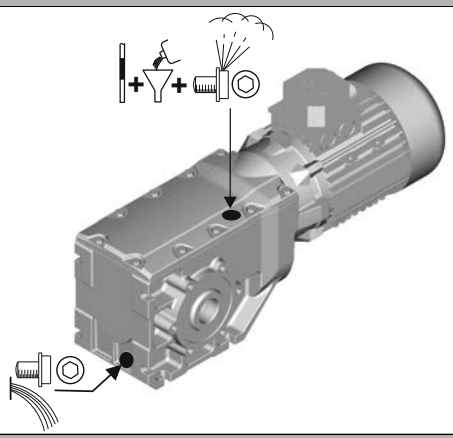	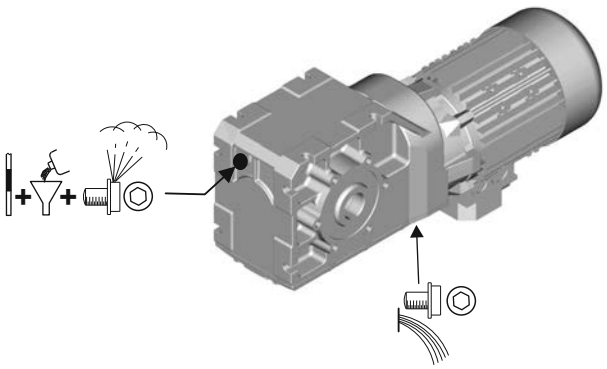
C	**D**
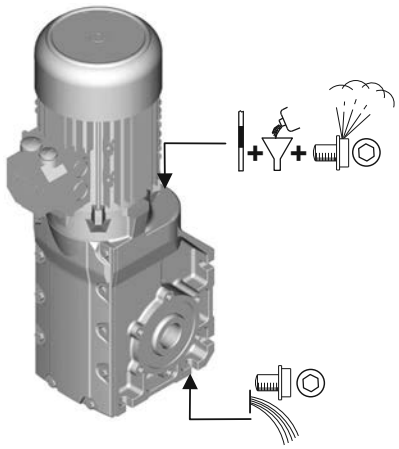	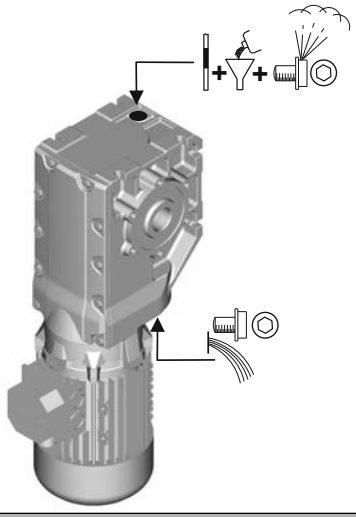
E	**F**
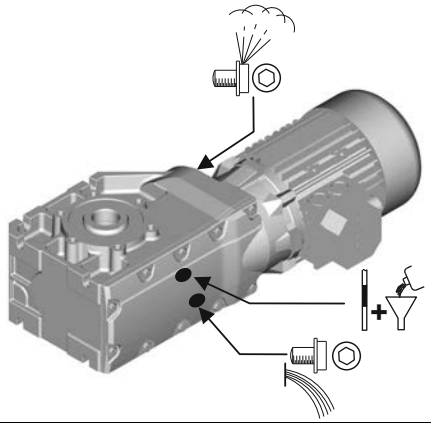	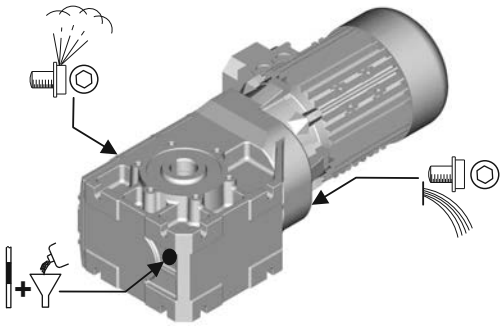

	Filler		Drain
	Breather element		Check

The shown oil bores are optional for gearbox size g500-B240!



7 Maintenance

Ventilation Maintenance operations

g500-B450

► **A ... F** mounting position

Gearbox g500-B450

A	B
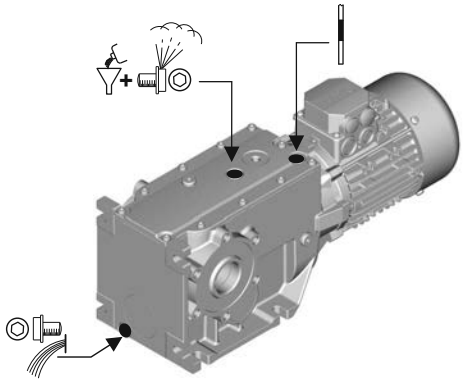	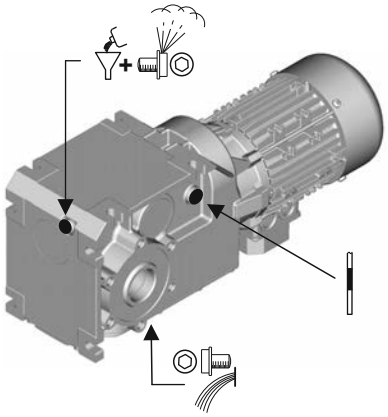
C	**D**
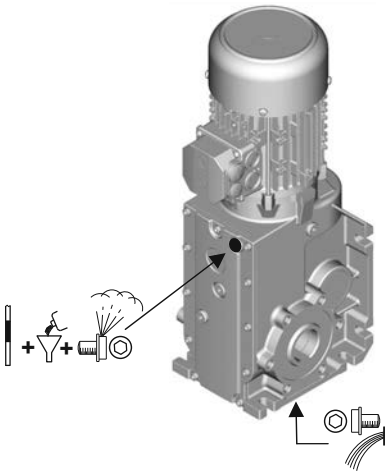	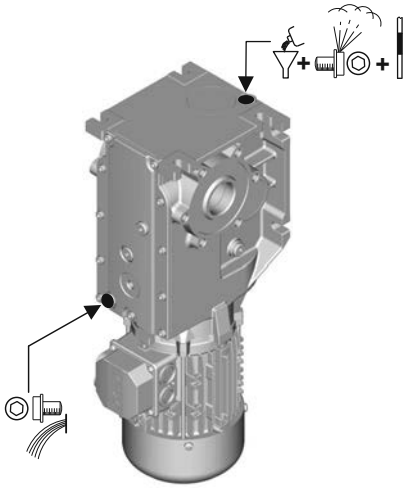
E	**F**
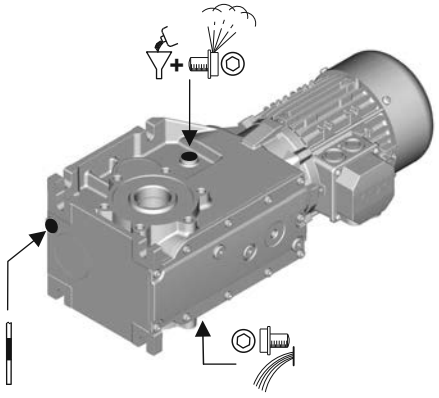	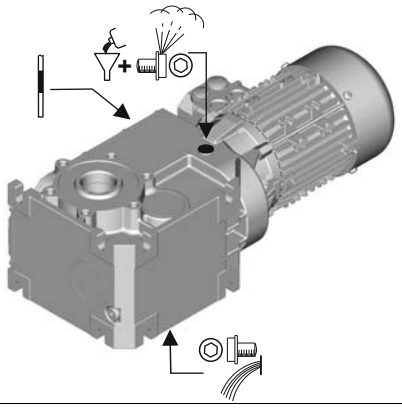

	Filler		Drain
	Breather element		Check

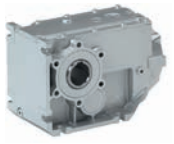

Permissible radial and axial forces at output

Permissible radial force

$F_{rad,perm} = f_w \times F_{rad,max}$

► If F_{rad} **and** $F_{ax} \neq 0$, please contact Lenze.

Permissible axial force

If there is no radial force, the maximum permissible axial force is 50 % of the table value $F_{rad,max}$

Application of forces

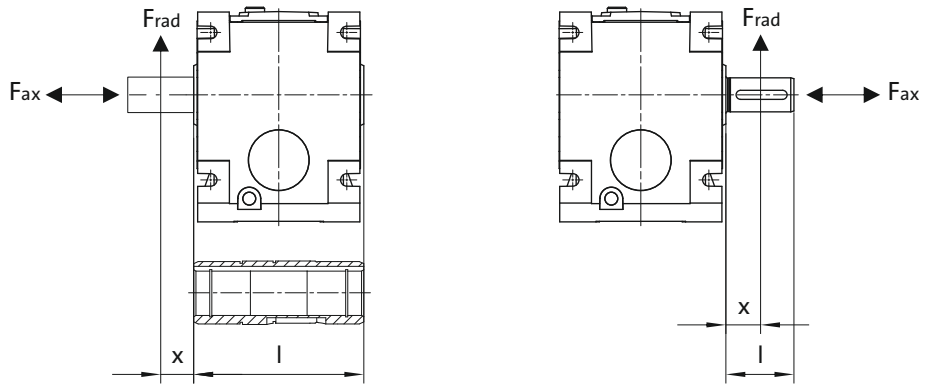

Additional load factor f_w at output shaft

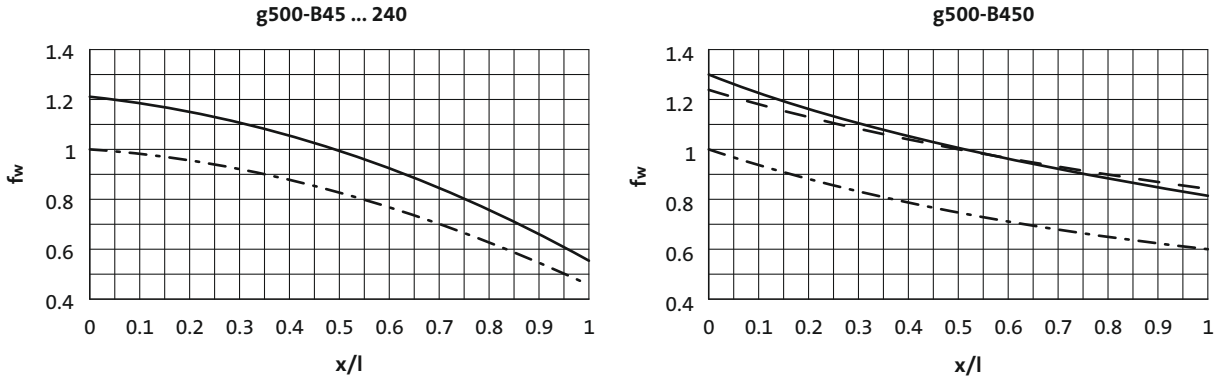

——— Solid shaft
— — — Solid shaft with flange
— · — Hollow shaft

6.7

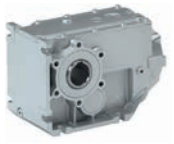

Permissible radial and axial forces at output

The values given in the table refer to the center shaft end force application point and are minimum values calculated according to the most unfavourable conditions (force application angle, mounting position, direction of rotation). The values were calculated for the motor/gearbox combination with a load capacity of c= 1.3 and an input speed of 1400 rpm.

- ► If the torque is transmitted via the flange face, max 50 % of the radial force $F_{rad,max}$ are permissible.
- ► Neither radial nor axial forces are permissible for the hollow shaft with shrink disc.

In case of different operating conditions, considerably higher forces can be transmitted. Please contact Lenze.

Product	n_2 [r/min]									
	1000	630	400	250	160	100	63	40	25	≤16

	Max. radial force, Hollow shaft									
	$F_{rad,max}$	$F_{rad,max}$	$F_{rad,max}$	$F_{rad,max}$	$F_{rad,max}$	$F_{rad,max}$	$F_{rad,max}$	$F_{rad,max}$	$F_{rad,max}$	$F_{rad,max}$
	[N]	[N]	[N]	[N]	[N]	[N]	[N]	[N]	[N]	[N]
g500-B45	900	1200	2200	2500	2800	3000	3000	3000	3000	3000
g500-B110	1000	2200	2550	3000	3300	3600	3600	3600	3600	3600
g500-B240	1500	2250	3800	4500	5100	6200	7400	7800	7800	7800
g500-B450	3000	3800	5000	5200	5200	5500	7000	9000	9000	9000

	Max. radial force, Solid shaft without flange									
	$F_{rad,max}$	$F_{rad,max}$	$F_{rad,max}$	$F_{rad,max}$	$F_{rad,max}$	$F_{rad,max}$	$F_{rad,max}$	$F_{rad,max}$	$F_{rad,max}$	$F_{rad,max}$
	[N]	[N]	[N]	[N]	[N]	[N]	[N]	[N]	[N]	[N]
g500-B45	900	1200	1800	2100	2400	2800	3000	3000	3000	3000
g500-B110	1000	1800	2100	2500	2700	3000	3000	3000	3000	3000
g500-B240	1500	2350	3000	3600	4500	5000	6000	6500	6500	6500
g500-B450	1800	2800	3600	4200	5100	6000	7200	7800	7800	7800

	Max. radial force, Solid shaft with flange									
	$F_{rad,max}$	$F_{rad,max}$	$F_{rad,max}$	$F_{rad,max}$	$F_{rad,max}$	$F_{rad,max}$	$F_{rad,max}$	$F_{rad,max}$	$F_{rad,max}$	$F_{rad,max}$
	[N]	[N]	[N]	[N]	[N]	[N]	[N]	[N]	[N]	[N]
g500-B45	900	1200	1800	2100	2400	2800	3000	3000	3000	3000
g500-B110	1000	1800	2100	2500	2700	3000	3000	3000	3000	3000
g500-B240	2400	3600	5200	6000	6500	6500	6500	6500	6500	6500
g500-B450	3000	4000	5500	6200	7000	7500	7800	7800	7800	7800

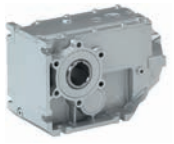

Moments of inertia

- The moments of inertia relate to the drive shaft of the gearbox.
- The total moment of inertia is calculated by adding the values of the gearbox, motor and accessories.

2-stage gearboxes

Product	Ratio	Moment of inertia
	i	J
		[kgcm²]
g500-B45	5.411	0.31
	6.222	0.28
	7.111	0.20
	8.178	0.18
	9.101	0.13
	10.466	0.12
	11.640	0.086
	13.386	0.079
	15.111	0.059
	17.378	0.055
	19.365	0.038
	22.270	0.054
	25.051	0.025
	28.808	0.023
	32.593	0.016
	37.481	0.015
	42.222	0.010
	48.556	0.009
	53.889	0.006
	61.972	0.006
g500-B110	5.185	0.79
	5.963	0.70
	7.111	0.48
	8.178	0.43
	9.101	0.32
	10.466	0.29
	11.449	0.26
	12.698	0.19
	14.603	0.18
	15.556	0.14
	17.889	0.13
	19.556	0.095
	22.489	0.088
	25.185	0.063
	28.963	0.060
	31.919	0.041
	36.707	0.039
	37.400	0.072
	40.000	0.028
	46.000	0.027
	48.167	0.050
	52.698	0.017
	60.603	0.016
	61.045	0.033
	76.500	0.023
	100.786	0.014

Product	Ratio	Moment of inertia
	i	J
		[kgcm²]
g500-B240	3.565	2.97
	4.889	1.74
	6.257	1.15
	6.883	1.67
	7.817	1.51
	9.440	1.05
	10.720	0.97
	12.081	0.73
	13.719	0.68
	15.008	0.59
	16.857	0.45
	19.143	0.42
	20.650	0.34
	23.450	0.32
	26.878	0.21
	30.522	0.20
	33.433	0.15
	37.967	0.15
	43.267	0.096
	49.133	0.092
	52.510	0.070
	59.630	0.067
	67.113	0.045
	76.213	0.043

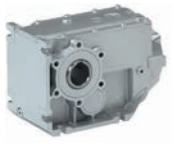

Moments of inertia

3-stage gearboxes

Product	Ratio	Moment of inertia
	i	J
		[kgcm²]
g500-B240	68.459	0.093
	77.741	0.091
	87.563	0.062
	99.437	0.061
	113.673	0.044
	129.087	0.043
	145.674	0.030
	165.426	0.030
	188.442	0.021
	213.994	0.020
	245.178	0.014
	278.422	0.014
	317.617	0.003
	360.683	0.003

Product	Ratio	Moment of inertia
	i	J
		[kgcm²]
g500-B450	5.002	4.36
	6.860	2.48
	9.315	3.21
	10.328	3.06
	12.775	1.87
	14.165	1.79
	16.349	1.23
	17.885	1.05
	19.831	1.01
	22.813	0.70
	25.294	0.68
	27.945	0.51
	30.985	0.49
	36.373	0.31
	40.330	0.30
	45.245	0.22
	50.167	0.21
	56.154	0.47
	62.262	0.47
	68.788	0.36
	76.271	0.36
	89.534	0.22
	99.274	0.22
	111.372	0.16
	123.487	0.16
	144.128	0.10
	159.807	0.099
	174.919	0.073
	193.948	0.072
	223.563	0.046
	247.882	0.046

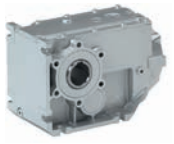

Additional weights for gearboxes

Product			g500-B45	g500-B110	g500-B240	g500-B450
Mass						
Solid shaft	m	[kg]	0.4	0.5	1.4	1.3
Shrink disc	m	[kg]	0.2	0.2	0.7	0.6
Flange	m	[kg]	0.3	0.4	0.7	0.9

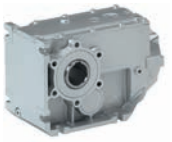

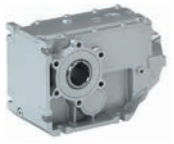

Torque plate

Torque support is usually effected by means of the foot or flange. Another simple possibility is provided by the attachable torque plates. Here, torque support is implemented solely via one point, which, among other things, is suitable for shaft-mounted gearboxes. Supplied rubber buffers provide for mounting with minimum stress and absorb light shocks.
The torque plates are available in two designs, for mounting on the available threaded pitch circle, or for the gearbox foot.

In addition, torque support for the g500-B45 gearbox can be effected via the holding fixture of the housing, which is integrated on both sides, by means of a rubber buffer.
The rubber buffers can be ordered optionally.



Torque plate

Torque plate on threaded pitch circle

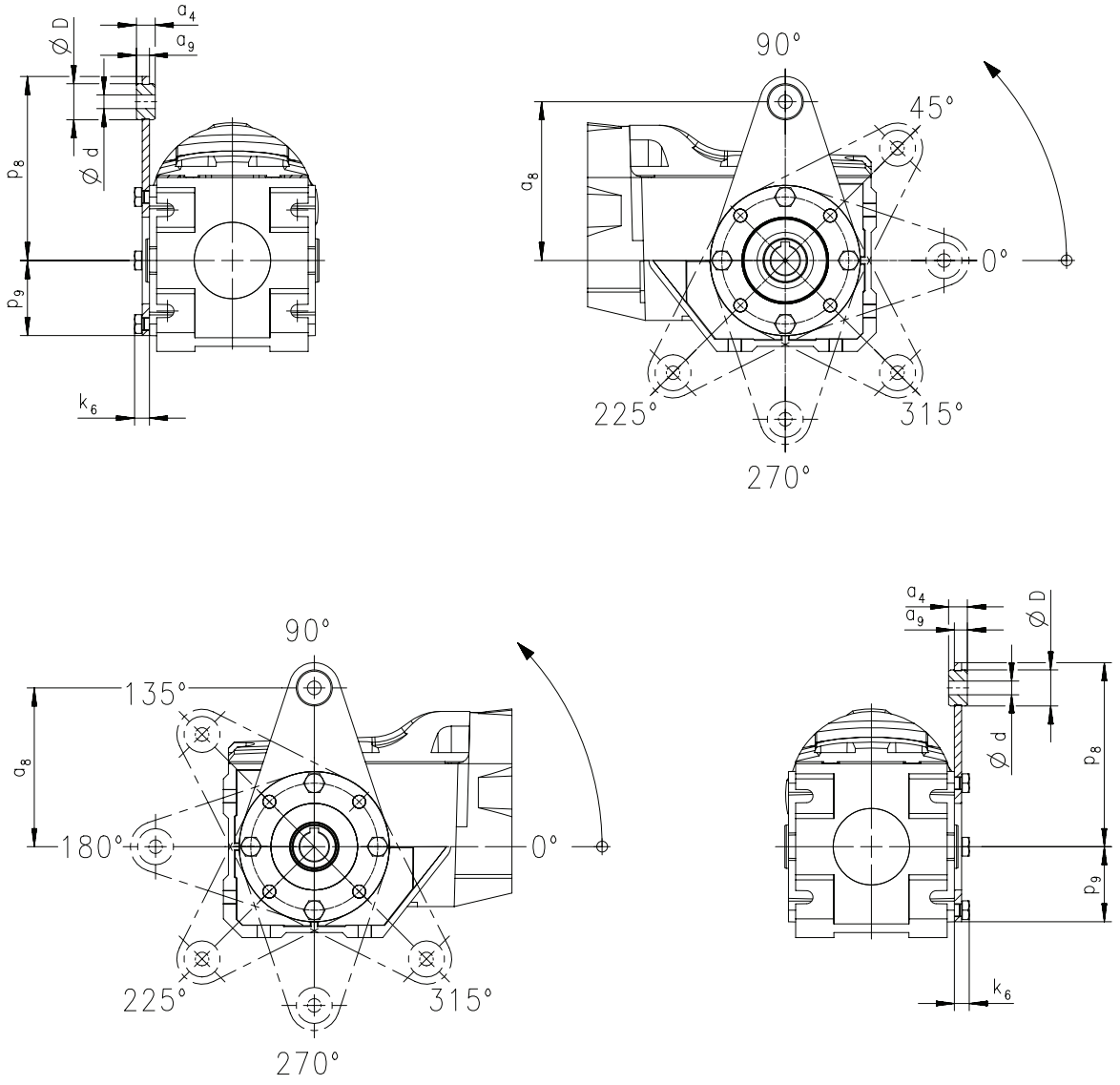

Product	Dimensions								Mass
	a_4	a_8	a_9	d	D	p_8	p_9	k_6	m
	[mm]	[mm]	[mm]	[mm]	[mm]	[mm]	[mm]	[mm]	[kg]
g500-B45	12.0	100	8.0	8.0	20.0	115	42.0	9.0	0.30
g500-B110	13.0	110	9.0	10.0	25.0	128	54.0	11.0	0.50



Torque plate

Torque plate on threaded pitch circle

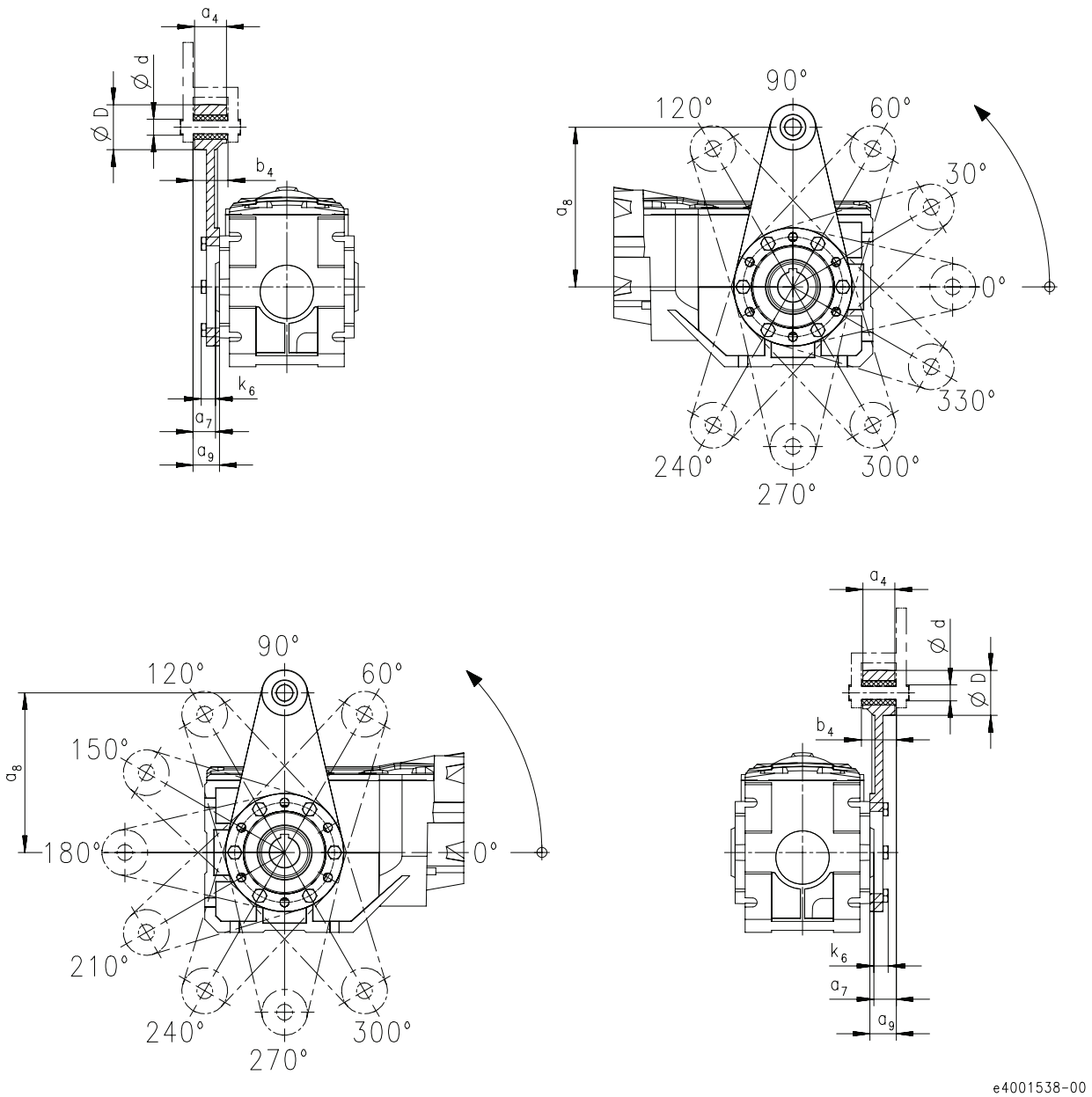

Product	Dimensions								Mass
	a_4	a_7	a_8	a_9	b_4	d	D	k_6	m
	[mm]	[mm]	[mm]	[mm]	[mm]	[mm]	[mm]	[mm]	[kg]
- g500-B240	34.0	23.5	160	27.5	38.5	16.0	45.0	15.0	1.30



Torque plate

Torque plate at housing foot

g500-B240

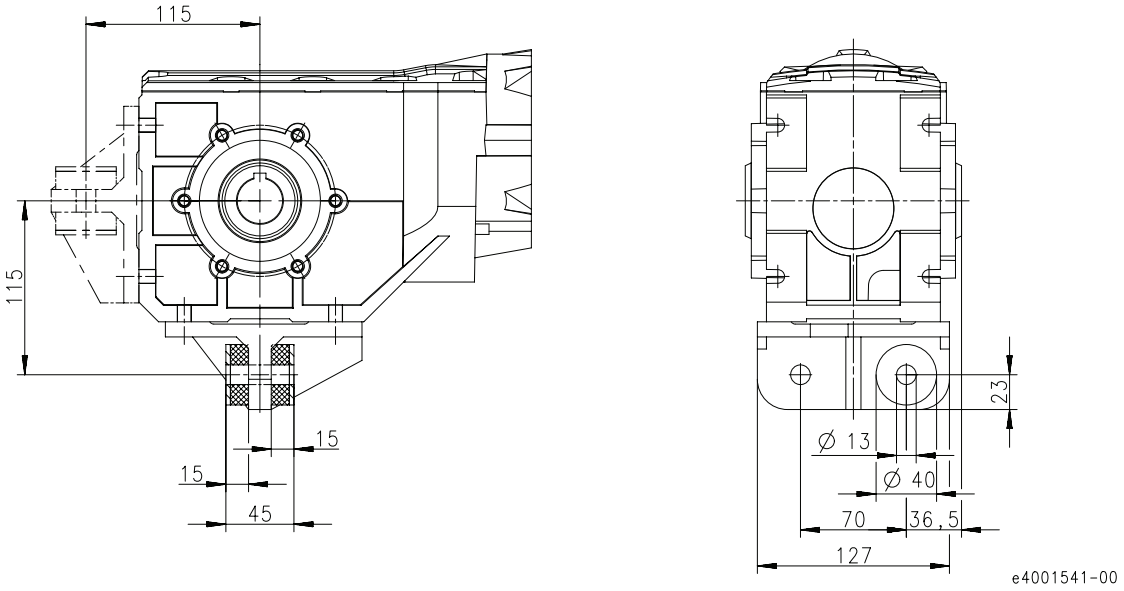

g500-B450

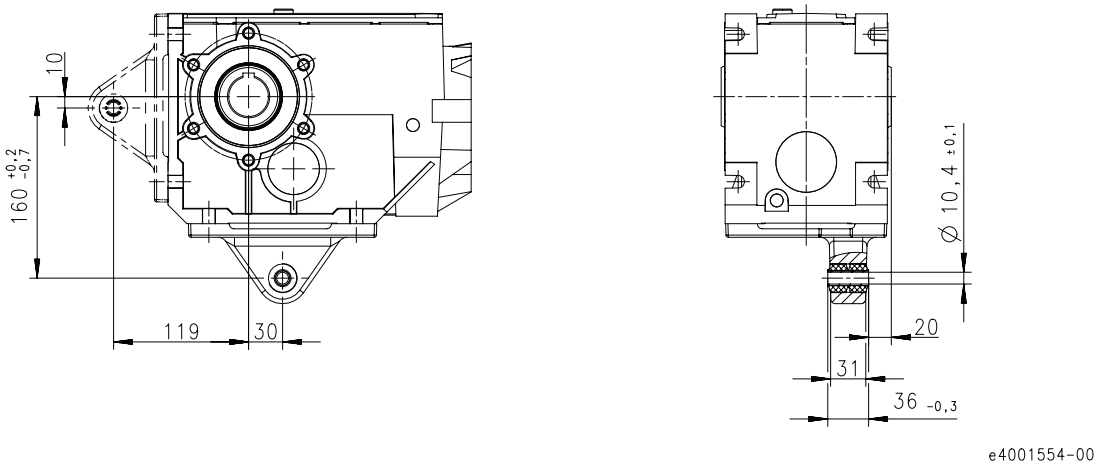

Product	Mass
	m
	[kg]
g500-B240	2.40
g500-B450	1.10



Torque plate

Rubber buffer for torque plate

g500-B45

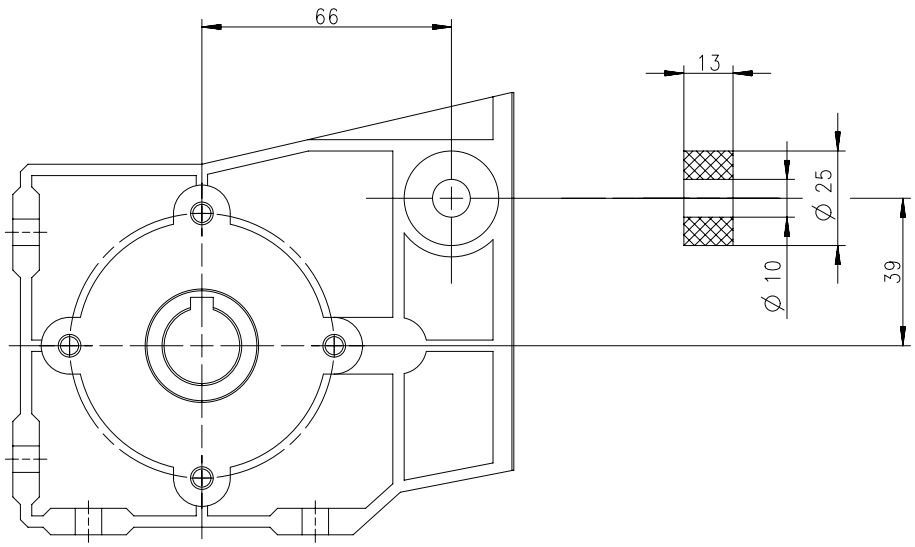



Shaft cover

Hoseproof hollow shaft cover

The cover protects the hollow shaft from objects falling in. It is sealed by a flat gasket between cover and housing. Thus, the hollow shaft is protected from dust and water jets.

The cover is loosely enclosed and can be mounted on both sides of the hollow shaft bore.

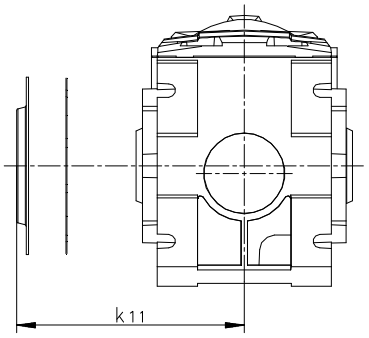

6.7

Product	Dimensions	Mass
	k_{11}	m
	[mm]	[kg]
g500-B45	55.0	0.050
g500-B110	65.0	0.050
g500-B240	75.0	0.10
g500-B450	79.5	0.15



Shaft cover

Shrink disc cover

The cover is provided for the shrink disc to be protected from contact.

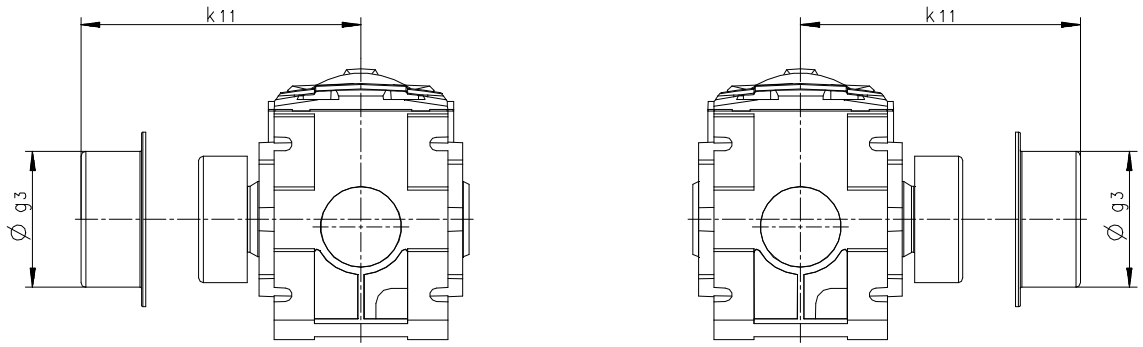

Product	Dimensions		Mass
	g_3	k_{11}	m
	[mm]	[mm]	[kg]
g500-B45	65.0	87.5	0.050
g500-B110	79.0	97.5	0.050
g500-B240	90.0	111	0.050
g500-B450	90.0	108	0.050



MCA asynchronous servo motors

2 to 1,100 Nm

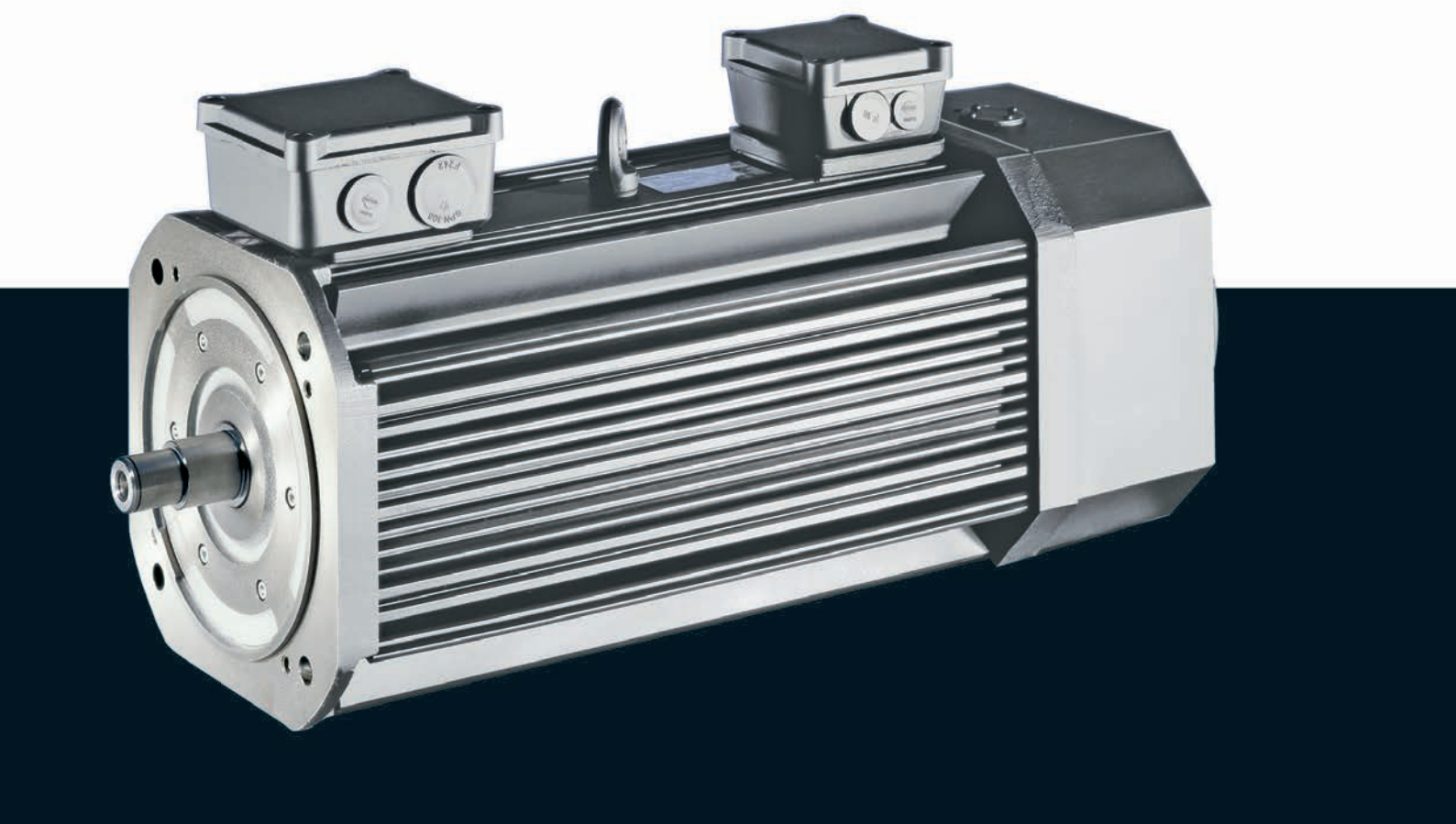

MCA asynchronous servo motors



Contents

General information	List of abbreviations	6.11 - 4
	Product key	6.11 - 6
	Product information	6.11 - 8
	Functions and features	6.11 - 9
	Dimensioning	6.11 - 11
Technical data	Standards and operating conditions	6.11 - 19
	Permissible radial and axial forces	6.11 - 20
	Rated data, non-ventilated	6.11 - 22
	Rated data, IP54 forced ventilated	6.11 - 23
	Rated data, IP23s forced ventilated	6.11 - 24
	Selection tables, Servo Drives 9400 HighLine	6.11 - 25
	Selection tables, Inverter Drives 8400 TopLine	6.11 - 32
	Selection tables, Servo Drives ECS	6.11 - 38
	Selection tables, Servo Inverter 9300	6.11 - 41
	Torque characteristics	6.11 - 47
	Dimensions, self-ventilated	6.11 - 66
	Dimensions, forced ventilated	6.11 - 68
Accessories	Permanent magnet holding brake	6.11 - 75
	Spring-applied holding brake	6.11 - 78
	Resolver	6.11 - 80
	Incremental encoder and SinCos absolute value encoder	6.11 - 81
	Blower	6.11 - 83
	Temperature monitoring	6.11 - 84
	Terminal box	6.11 - 85
	ICN connector	6.11 - 87



List of abbreviations

$\eta_{100\,\%}$	[%]	Efficiency
cos ϕ		Power factor
du/dt	[kV/µs]	Insulation resistance
$F_{ax,-}$	[N]	Min. axial force
$F_{ax,+}$	[N]	Max. axial force
$f_{in,max}$	[Hz]	Max. input frequency
f_{max}	[kHz]	Limit frequency
f_{max}	[kHz]	Max. switching frequency
f_N	[Hz]	Rated frequency
F_{rad}	[N]	Max. radial force
H_{max}	[m]	Site altitude
I_0	[A]	Standstill current
I_{max}	[A]	Max. short-time DC-bus current
I_{max}	[A]	Max. current
I_{max}	[A]	Max. current consumption
I_{max}	[A]	Max. current
I_{max}	[A]	Max. DC-bus current
I_N	[A]	Rated current
J	[kgcm²]	Moment of inertia
J_{MB}	[kgcm²]	Moment of inertia
$KE_{LL\,150\,°C}$	[V /(1000 r/min)]	Voltage constant
$Kt_{0\,150\,°C}$	[Nm/A]	Torque constant
L	[mH]	Mutual inductance
$L_{1\sigma}$	[mH]	Stator leakage inductance
$L_{2\sigma}$	[mH]	Rotor leakage inductance
L_N	[mH]	Rated inductance
m	[kg]	Mass
M_0	[Nm]	Stall torque
$M_{0,\,max}$	[Nm]	Max. standstill torque
M_{av}	[Nm]	Average dynamic torque
M_{max}	[Nm]	Max. torque
M_N	[Nm]	Rated torque
n_{eto}	[r/min]	Transition speed
n_k	[r/min]	Speed
n_{max}	[r/min]	Max. speed

n_N	[r/min]	Rated speed
P_N	[kW]	Rated power
Q_E	[J]	Maximum switching energy
R	[Ω]	Insulation resistance
R	[Ω]	Min. insulation resistance
R_1	[Ω]	Stator impedance
R_2	[Ω]	Charging resistor
R_2	[Ω]	Rotor impedance
$R_{UV\,150\,°C}$	[Ω]	Stator impedance
$R_{UV\,20\,°C}$	[Ω]	Stator impedance
$S_{hü}$	[1/h]	Transition operating frequency
T	[°C]	Operating temperature
T	[°C]	Rated temperature
T	[°C]	Max. ambient temperature of bearing
T	[°C]	Max. surface temperature
T	[°C]	Max. ambient temperature for transport
T	[°C]	Min. ambient storage temperature
T	[°C]	Min. ambient temperature for transport
T	[°C]	Ambient temperature
t_1	[ms]	Engagement time
t_2	[ms]	Disengagement time
$T_{opr,max}$	[°C]	Max. ambient operating temperature
$T_{opr,min}$	[°C]	Min. ambient operating temperature
$U_{in,max}$	[V]	Max. input voltage
$U_{in,min}$	[V]	Min. input voltage
U_{max}	[V]	Max. mains voltage
U_{max}	[V]	Min. input voltage
U_{min}	[V]	Min. mains voltage
$U_{N,\,AC}$	[V]	Rated voltage
$U_{N,\,DC}$	[V]	Rated voltage
Z_{ro}	[Ω]	Rotor impedance
Z_{rs}	[Ω]	Impedance
Z_{so}	[Ω]	Stator impedance



List of abbreviations

CE	Communauté Européenne
CSA	Canadian Standards Association
DIN	Deutsches Institut für Normung e.V.
EMC	Electromagnetic compatibility
EN	European standard
EAC	Customs union Russia / Belarus / Kazakhstan certificate
IEC	International Electrotechnical Commission
IM	International Mounting Code
IP	International Protection Code
NEMA	National Electrical Manufacturers Association
UkrSEPRO	Certificate for Ukraine
UL	Underwriters Laboratory Listed Product
UR	Underwriters Laboratory Recognized Product
VDE	Verband deutscher Elektrotechniker (Association of German Electrical Engineers)



Product key

Motor type	Motor size	Rated speed	Mains voltage	Speed/angle sensor	Brake	Standard design	Shaft diameter	Concentricity+ vibration level/ Bearing
MCA								
Asynchronous servo motor	(Example: 14L)	value in 100 rpm (example: 2000 = 20)					(Example: 24)	

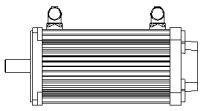

Mains voltage

- 400 V: -

Speed/angle sensor

- RS0: Resolver
- SRS: SinCos absolute encoder single- turn, Hiperface, AS1024-8V-H (SRS50)
- SRM: SinCos absolute encoder multi-turn, Hiperface, AM1024-8V-H (SRM50)
- ECN: SinCos absolute encoder single- turn, EnDat, AS2048-5V-E (ECN 1313)
- EQN: SinCos absolute encoder multi- turn, EnDat, AM2048-5V-E (EQN 1325)
- EQI: SinCos absolute encoder multi- turn, EnDat, AM32-5V-E (EQI 1331) [2)]
- S20: Incremental sin-cos encoder IG2048-5V-S (ITD 22)
- T20: TTL incremental encoder, IG2048-5V-T (ITD 21)
- T40: TTL incremental encoder, IG4096-5V-T (ITD 21)
- RV0: Safety resolver, RV03
- S1S: Safety incremental Sin-cos encoder, IG1024-5V-V3

Brake

- B0: No brake
- P1: PM brake DC 24V
- P2: PM brake DC 24V, heavy-duty
- P5: PM brake DC 205 V [1)]
- P6: PM brake DC 205 V, heavy-duty [1)]
- F1: Spring-applied brake DC 24 V
- F2: Spring-applied brake DC 24 V, heavy-duty
- FG: Spring-applied brake AC 230 V [1)]
- FH: Spring-applied brake AC 230 V, heavy-duty [1)]

Standard design

- A: Standard flange form A / FF (B5), shaft without keyway
- B: Standard flange form A / FF (B5), shaft with keyway
- C: Standard flange form C / FT (B14), shaft without keyway
- N: Standard flange form C / FT (B14), shaft with keyway
- F: Like standard design A, but with large flange (MCA20/21/26)
- G: Like standard design B, but with large flange (MCA20/21/26)
- O: B3 foot mounting, shaft without keyway
- P: B3 foot mounting, shaft with keyway

Concentricity+ vibration level/ Bearing

- N: normal vibrational severity standard bearing
- R: reduced vibrational severity standard bearing
- V: normal vibrational severity reinforced bearing

[1)] Not possible for UL design.
[2)] Not possible for motor frame sizes 20, 22 and 26.



Product key

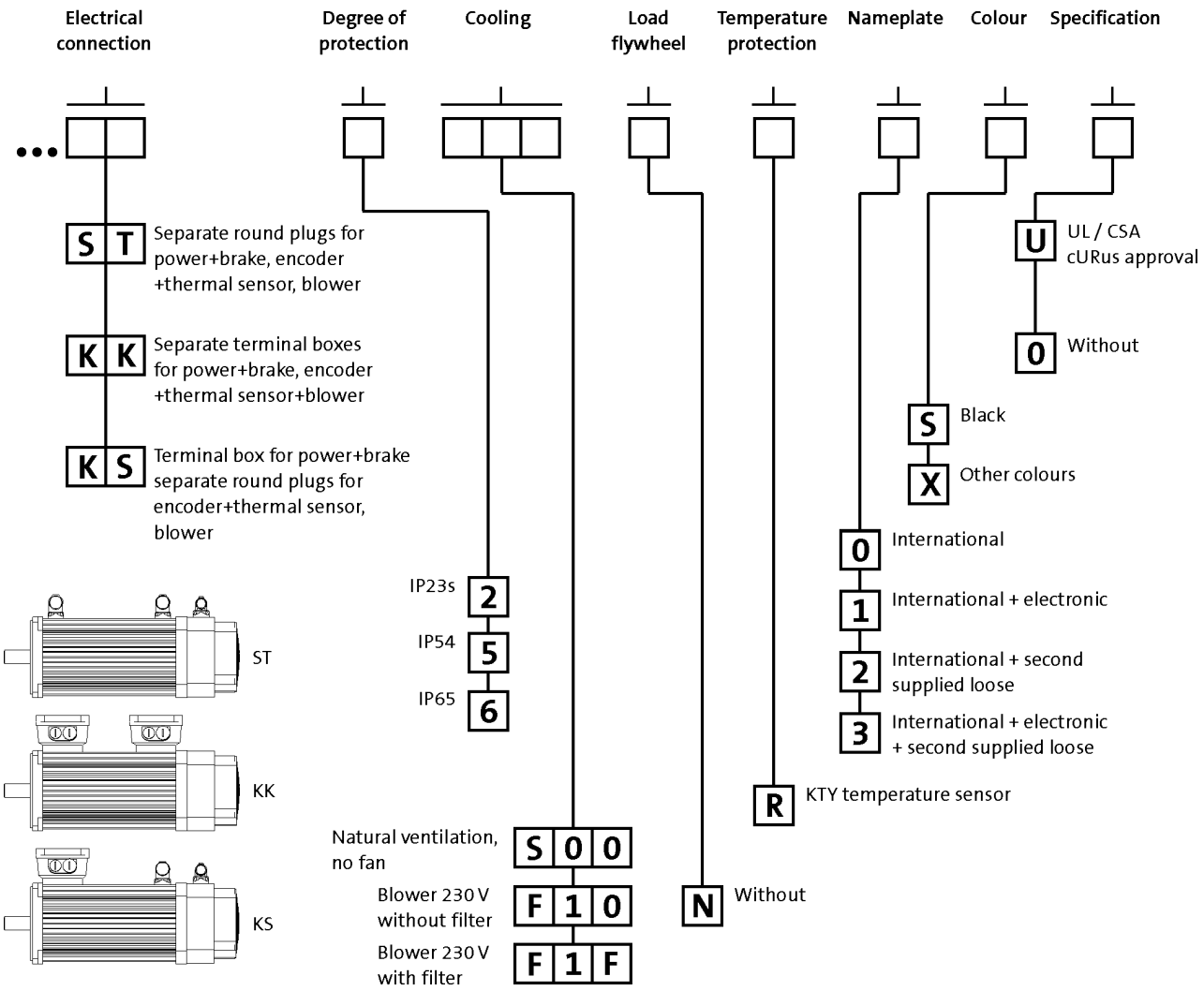
Electrical connection
Degree of protection
Cooling
Load flywheel
Temperature protection
Nameplate
Colour
Specification
S T
Separate round plugs for power+brake, encoder +thermal sensor, blower
K K
Separate terminal boxes for power+brake, encoder +thermal sensor+blower
K S
Terminal box for power+brake separate round plugs for encoder+thermal sensor, blower
ST
KK
KS
IP23s
IP54
IP65
2
5
6
Natural ventilation, no fan
Blower 230 V without filter
Blower 230 V with filter
S 0 0
F 1 0
F 1 F
N
Without
R
KTY temperature sensor
0
International
1
International + electronic
2
International + second supplied loose
3
International + electronic + second supplied loose
S
Black
X
Other colours
U
UL / CSA cURus approval
0
Without



Product information

An application-oriented structure, low moments of inertia, compact dimensions and a high degree of intrinsic operational reliability characterise these robust and dynamic motors.

The compact design and the low moment of inertia allow these motors to be used in dynamic applications. If your application calls for a broad speed setting range and a robust construction, then the choice is easy: MCA asynchronous servo motors from Lenze.
Whether as a self-ventilated version or with a blower – with a power range from 0.8 to 53.8 kW, the MCA asynchronous servo motors offer rated torque values of up to 280 Nm and peak torque values of up to 1100 Nm. In comparison to standard three-phase AC motors, these servo motors have the edge in terms of lower moments of inertia, lower weight and higher maximum speeds.

Advantages
- High dynamic performance thanks to low moments of inertia
- Compact size with high power density
- Robust regenerative resolver system – alternatively SinCos and incremental encoder for the highest precision
- Easy to install and service friendly thanks to use of SpeedTec connectors
- Terminal box optional up to MCA21 MCA22 and 26 with three-part terminal box
- Protection: IP23, IP54, IP65 optional for naturally ventilated servo motors
- cURus-approved, GOST-certified, CE, RoHS-compliant
- High maximum speeds
- Wide speed setting range
- Field weakening operation usable
- Electronic nameplate



MCA21 asynchronous servo motor



Functions and features

	MCA10	MCA13	MCA14	MCA17	MCA19
Design					
	B14-FT85 B5-FF100	B14-FT130 B5-FF130	B14-FT130 B5-FF165		B14-FT130 B5-FF215
Shaft end (with and without keyway)					
	14 x 30	19 x 40	24 x 50		28 x 60
A end shield					
	Oil-tight Not oil-tight				
Brake					
Spring-applied brake					
Permanent magnetic brake	DC 24 V AC 230 V [1] DC 205 V [1]				
Speed and angle encoder					
	Resolver SinCos single-turn/multi-turn Incremental encoder				
Cooling					
Without blower	Naturally ventilated				
Axial blower, 1 phase	230 V; 50 Hz				
Temperature sensor					
Thermal detector	KTY				
Motor connection: plug connector					
	Power + brake Encoder + thermal sensor Blower				
Motor connection: terminal box					
	Power + brake Encoder + thermal sensor	Power + brake Encoder + thermal sensor + blower			
Motor connection: Terminal box + plug connector					
Terminal box	Power + brake Encoder + thermal sensor				
Plug connector		Blower			
Shaft bearings					
Bearing type	Deep-groove ball bearing with high-temperature resistant grease, sealing disc or cover plate				
Position of the locating bearing	Drive end Standard motors (B3, B5, B14): side B Motors for gearbox direct mounting: side A				
Installation of the locating bearing					
Colour					
	RAL9005M				

[1] Not possible for UR version.



Functions and features

	MCA20	MCA21	MCA22	MCA26
Design				
	B3 B35-FF215 B35-FF265	B14-FT130 B5-FF215 B5-FF265	B3 B35-FF265	B3 B35-FF265 B35-FF350
Shaft end (with and without keyway)				
	38 x 80			55 x 110
A end shield				
	Oil-tight Not oil-tight			
Brake				
Spring-applied brake	DC 24 V AC 230 V [1]		DC 24 V AC 230 V [1]	
Permanent magnetic brake		DC 24 V AC 230 V [1] DC 205 V [1]		
Speed and angle encoder				
	Resolver SinCos single-turn/multi-turn Incremental encoder			
Cooling				
Without blower		Naturally ventilated		
Axial blower, 1 phase	230 V; 50 Hz 230 V; 60 Hz	230 V; 50 Hz	230 V; 50 Hz 230 V; 60 Hz	
Temperature sensor				
Thermal detector	KTY			
Motor connection: plug connector				
	Power + brake Encoder + thermal sensor Blower			
Motor connection: terminal box				
		Power + brake Encoder + thermal sensor + blower		
Motor connection: Terminal box + plug connector				
Terminal box	Power + brake	Power + brake Encoder + thermal sensor	Power + brake	
Plug connector	Encoder + thermal sensor Blower	Blower	Encoder + thermal sensor Blower	
Shaft bearings				
Bearing type	Deep-groove ball bearing with high-temperature resistant grease, sealing disc or cover plate			
Position of the locating bearing	Non-drive end	Drive end Standard motors (B3, B5, B14): side B Motors for gearbox direct mounting: side A	Non-drive end	
Installation of the locating bearing	insulation		insulation	
Colour				
	RAL9005M			

[1] Not possible for UR version.



Dimensioning

Speed-dependent safety functions

Single encoder concepts with resolvers

Servo motors can perform speed-dependent safety functions for safe speed and / or safe relative position monitoring in a drive system with the Servo Drives 9400. The SM301 safety module, which can be integrated in the Servo Drives 9400, is used to implement these functions. When planning systems/installations of this kind, the following must always be observed:

When using just one single feedback system in the environment of these safety applications, the applicable safety engineering standard IEC 61800-5-2 [Adjustable speed electrical power drive systems - Part: 5-2: Safety requirements - Functional] stipulates special requirements for the connection between feedback system and motor shaft. This is due to the fact that two-channel safety systems at this point in the mechanical system are actually designed as single-channel systems. If this mechanical connection is designed with considerable overdimensioning, the standard permits exclusion of the fault "encoder-shaft breakage" or "encoder-shaft slip".
As such, acceleration limit values must not be exceeded for the individual drive solutions. You can find the limit values in the corresponding feedback data of the individual motor ranges.

Speed-dependent safety functions in connection with the SM301 safety module

For the following speed-dependent safety functions, the motor-feedback system combinations listed in the following table are available:
- Safe stop 1 (SS1)
- Safe operational stop (SOS)
- Safely Limited Speed (SLS)
- Safe Maximum Speed (SMS)
- Safe direction (SDI)
- Operation mode selector (OMS) with confirmation (ES)
- Safe speed monitor (SSM)
- Safely limited increment (SLI).

Encoder type	Encoder type	Product key	Feedback	Safe speed monitoring
			Design	
SinCos incremental	Single-turn	IG1024-5V-V3		PL e/SIL 3
Resolver		RV03		
			2-encoder concept	up to PL e / SIL 3



Dimensioning

Cooling effect of mounting flange

Mounting on a thermally conducting / insulating plate or machine chassis has an influence on heating up the motor, particularly when using naturally ventilated motors.

The motor rating data specified in the catalogue applies when mounting on a steel plate with free convection with the following dimensions:

- MCA10 / 13: 270 x 270 mm
- MCA14 / 17: 330 x 330 mm
- MCA19 to 26: 450 x 450 mm

Vibrational severity

		MCA10	MCA13	MCA14	MCA17	MCA19	MCA20	MCA21	MCA22	MCA26
Vibrational severity										
IEC/EN 60034-14		A		B			A	B	A	
Maximum r.m.s. value of the vibration velocity [1]	[mm/s]	1.60		0.70			1.60	0.70	1.60	

[1] Free suspension

► at n = 600 to 3,600 rpm



Dimensioning

Concentricity and axial run-out of the mounting flanges and smooth running of the shaft ends

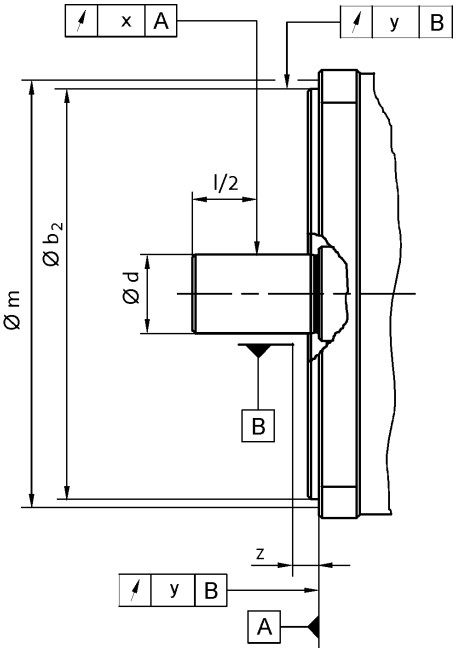

				MCA10		MCA13		MCA14		MCA17		MCA19	
Flange size													
				FF100	FT85	FF130	FT130	FF165	FT130	FF165	FT130	FF215	FT130
Dimensions													
	b_2	j6	[mm]	80	70	110		130	110	130	110	180	110
	b_2	h6	[mm]										
	d	k6	[mm]	14		19		24				28	
	d	m6	[mm]										
Distance													
Measuring diameter	m		[mm]	113	98.0	149		188	149	188	149	239	149
Dial gauge holder for flange check	z	+/- 1	[mm]	10.0									
Concentricity													
IEC 60072				Normal class				Precision class					
Value	y		[mm]	0.080		0.10		0.050					
Linear movement													
IEC 60072				Normal class				Precision class					
Value	y		[mm]	0.080		0.10		0.050					
Smooth running													
IEC 60072				Normal class				Precision class					
Value	x		[mm]	0.035		0.040		0.021					

► Limit values for checking the smooth running of the shaft ends as well as the concentricity and axial run-out of the mounting flange to IEC 60072



Dimensioning

Concentricity and axial run-out of the mounting flanges and smooth running of the shaft ends

				MCA20		MCA21			MCA22	MCA26
Flange size										
				FF215	FF265	FF215	FF265	FT130	FF265	FF350
Dimensions										
	b_2	j6	[mm]	180	230	180	230	110	230	
	b_2	h6	[mm]							300
	d	k6	[mm]			38				
	d	m6	[mm]							55
Distance										
Measuring diameter	m		[mm]	239	289	239	289	149	289	384
Dial gauge holder for flange check	z	+/- 1	[mm]				10.0			
Concentricity										
IEC 60072				Normal class		Precision class			Normal class	
Value	y		[mm]	0.10		0.050			0.10	
Linear movement										
IEC 60072				Normal class		Precision class			Normal class	
Value	y		[mm]	0.10		0.050			0.10	
Smooth running										
IEC 60072				Normal class		Precision class			Normal class	
Value	x		[mm]	0.050		0.060			0.050	0.060

► Limit values for checking the smooth running of the shaft ends as well as the concentricity and axial run-out of the mounting flange to IEC 60072



Dimensioning

Notes on the selection tables

Graphical display of the operating points

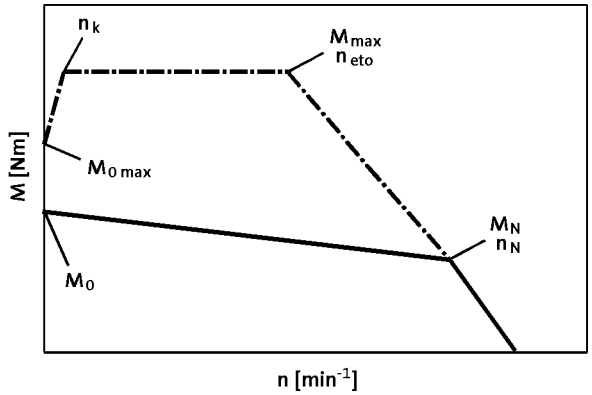

	n_k
	[r/min]
MCA	150
MQA	

Further selection tables with different switching frequencies are available with the following codes:
- DS_ZT_MCS_0001
- DS_ZT_MCA_0001
- DS_ZT_MDSKS_0001
- DS_ZT_MDFKS_0001

Simply enter this code (e.g. DS_ZT_MCS_0001) as a search string at **www.lenze.de/dsc** and you will be given the information immediately in the form of a PDF format.

Please note:
- With an active load (e.g. vertical drive axes, hoists, test benches, unwinders), $M_{0\,max}$ must be taken into account
- With a passive load (e.g. horizontal drive axes), M_{max} can generally be used
- At speeds < n_k, the inverter-specific torque $M_{0\,max}$ that can be achieved is lower than M_{max}
- On the servo inverters, the switching frequency-dependent overload capacity has been taken into account in the factory settings. For further information, please refer to the Servo-Inverters catalogue.



Dimensioning

Notes on the torque characteristics

Graph of the torque characteristics

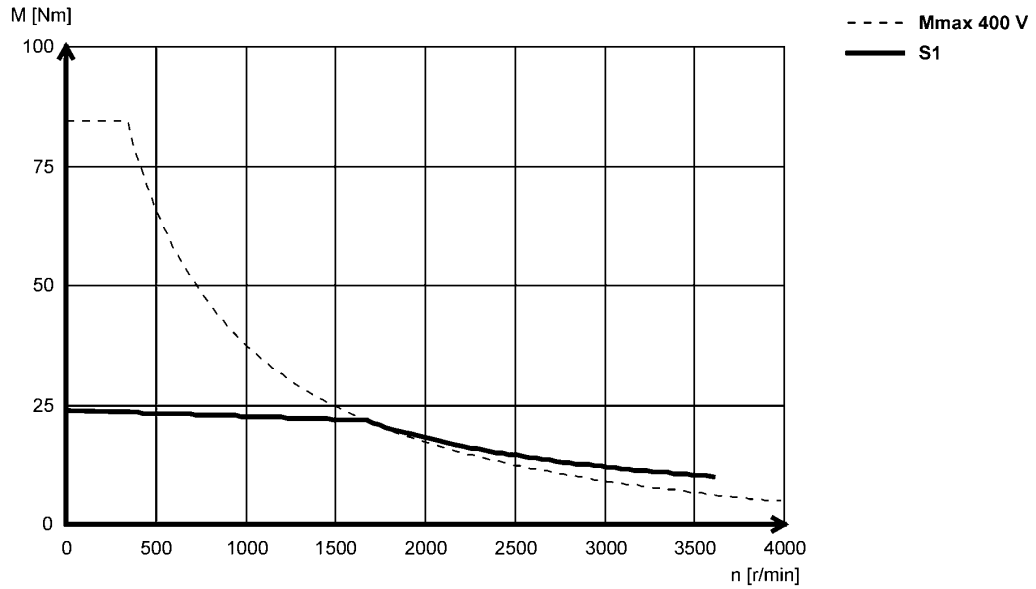

With asynchronous servo motors, two characteristics are shown in each case. The characteristics for continuous operation (S1) show the speed-dependent constant torque of the motor when operating with a servo inverter that itself is operated at a constant switching frequency. The limit torque characteristics correspond to those that come about during operation of the motor with the largest possible 9400 Servo Drive in each case (see selection tables). The servo inverter is set to a variable switching frequency here.

Characteristics in the Internet

You can find the torque characteristic for inverter-motor combinations on the Internet at **www.lenze.de/dsc**. This lists all useful combinations with the servo inverters 9400, 9300, ECS and Inverter Drives 8400 TopLine. These characteristics are each determined using the factory default settings of the inverters:

- 9400 with variables switching frequency.
  This means that up to 6-fold overcurrent can be applied in borderline cases.
- 9300 and ECS with fixed switching frequency.
- 8400 TopLine with variables switching frequency.

The continuous operation characteristics (S1) show the inverter-independent motor rating values

Further information on the terms switching frequency and factory default settings can be found in the operating manual of the respective servo inverter.



Dimensioning

Influence of ambient temperature and site altitude

The information relating to the servo motors in the tables and graphs is valid for a maximum ambient temperature (T_{opr}) of 40 °C and a site altitude (H) up to 1000 m above sea level. The torque correction factor (k_{M1}) shall be applied to the S1 torque characteristic (M_0...M_N) in the event of differing installation conditions.

- The maximum permissible ambient temperature (T_{opr}) for servo motors with blowers is 40 °C

Torque correction factor k_{m1}

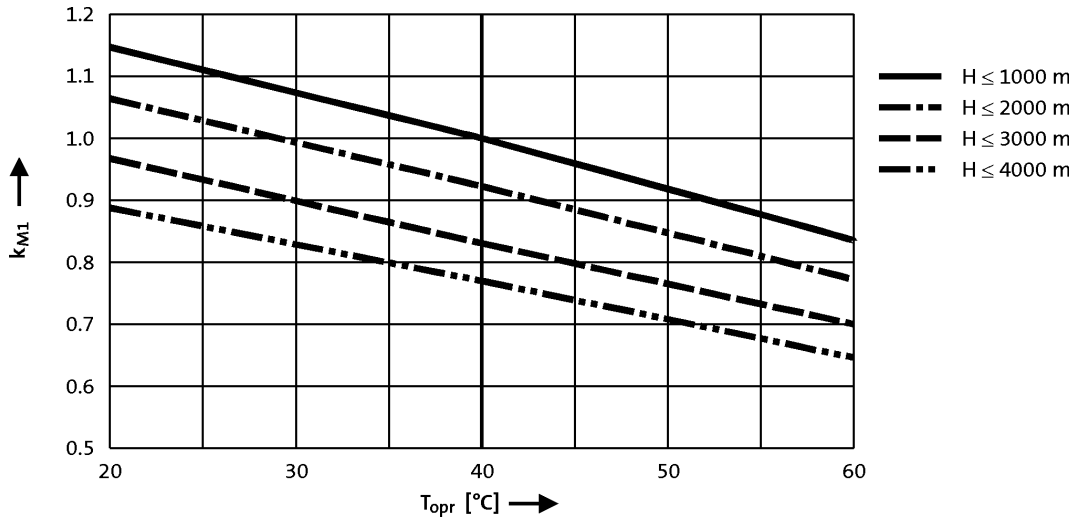





Standards and operating conditions

			MCA	
Cooling type				
			Naturally ventilated	Blower
Degree of protection				
EN 60529			IP54 IP65	IP54 IP23s [2]
Temperature class				
IEC/EN 60034-1; utilisation			F	
IEC/EN 60034-1; insulation system (enamel-insulated wire)			H	
Conformity				
CE			Low-Voltage Directive	
			2006/95/EC	
EAC			TP TC 004/2011 (TR CU 004/2011)	
Approval				
			UkrSEPRO	
CSA			CSA 22.2 No. 100	
cURus [3]			UL 1004-1 UL 1004-6 Power Conversion Equipment (File-No. E210321)	
Max. voltage load				
IEC/TS 60034-25			Pulse voltage limiting curve A	
Smooth running				
IEC 60072			Precision class [1] Normal class	
Linear movement				
IEC 60072			Precision class [1] Normal class	
Concentricity				
IEC 60072			Precision class [1] Normal class	
Mechanical ambient conditions (vibration)				
IEC/EN 60721-3-3			3M6 3M6	
Min. ambient operating temperature				
Without brake	$T_{opr,min}$	[°C]	-20	-15
With brake	$T_{opr,min}$	[°C]	-10	
Max. ambient temperature for operation				
	$T_{opr,max}$	[°C]	40	
Max. surface temperature				
	T	[°C]	140	110
Mechanical tolerance				
Flange centring diameter			$b_2 \leq 230$ mm = j6 $b_2 > 230$ mm = h6	
Shaft diameter			d ≤ 50 mm = k6 d > 50 mm = m6	
Site altitude				
Amsl	H_{max}	[m]	4000	

[1] MCA14, 17, 19 and 21.
[2] MCA20, 22 and 26.
[3] MCA20X29, MCA21X35 with circular connector for motor connection only UR



Permissible radial and axial forces

Application of forces

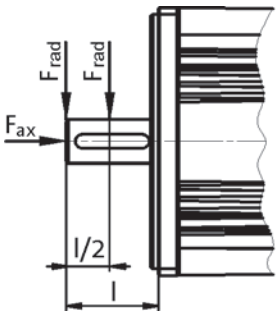

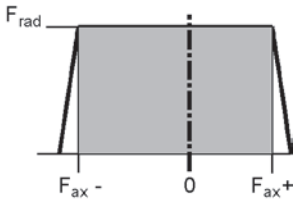

Application of force at l/2

	Bearing service life L_{10}														
	5000 h			10000 h			20000 h			30000 h			50000 h		
	F_{rad} [N]	$F_{ax,-}$ [N]	$F_{ax,+}$ [N]	F_{rad} [N]	$F_{ax,-}$ [N]	$F_{ax,+}$ [N]	F_{rad} [N]	$F_{ax,-}$ [N]	$F_{ax,+}$ [N]	F_{rad} [N]	$F_{ax,-}$ [N]	$F_{ax,+}$ [N]	F_{rad} [N]	$F_{ax,-}$ [N]	$F_{ax,+}$ [N]
MCA10	630	-130	320	500	-60	250	400	-30	210	330	-10	190	230	0	200
MCA13	850	-110	570	700	-10	450	470	0	450		0	450			
MCA14	1000	-140	500	780	-60	420	550	-30	380	400	-10	360	250	0	350
MCA17	1380	-180	790	1040	-70	680	660	-40	650	440	-20	630	280		610
MCA19	1880	-50	1530	1080	-30	1510	500	-100	1490	160	0	1470			
MCA20	3400	-1330	690	2500	-1020	380	1950	-780	140	1700	-690	40			
MCA21	3200	-260	1740	2360	-70	1550	1470	-20	1504	1030	0	1480			
MCA22	3600	-2370	1700	2800	-1740	1090	2200	-1280	640	1900	-1080	440	1600	-880	240
MCA26	6950	-2500	1580	5400	-1800	880	4300	-1300	380	3700	-1090	160			

Application of force at l

	Bearing service life L_{10}														
	5000 h			10000 h			20000 h			30000 h			50000 h		
	F_{rad} [N]	$F_{ax,-}$ [N]	$F_{ax,+}$ [N]	F_{rad} [N]	$F_{ax,-}$ [N]	$F_{ax,+}$ [N]	F_{rad} [N]	$F_{ax,-}$ [N]	$F_{ax,+}$ [N]	F_{rad} [N]	$F_{ax,-}$ [N]	$F_{ax,+}$ [N]	F_{rad} [N]	$F_{ax,-}$ [N]	$F_{ax,+}$ [N]
MCA10	590	-130	320	470	-60	250	370	-30	210	310	-10	190	220	0	200
MCA13	780	-110	570	640	-10	450	430	0	450	300	0	450			
MCA14	930	-140	500	710	-60	420	490	-30	380	370	-10	360	230	0	350
MCA17	1270	-180	790	960	-70	680	610	-40	650	400	-20	630	260		610
MCA19	1740	-50	1530	1000	-30	1510	420	-100	1490	140	0	1470			
MCA20	3150	-1170	530	2300	-920	280	1800	-710	70	1400	-650	0			
MCA21	2940	-260	1740	2160	-70	1550	1350	-20	1504	950	0	1480			
MCA22	3500	-2240	1600	2600	-1640	1100	2050	-1200	560	1800	-1020	380	1450	-850	200
MCA26	6400	-2080	1150	5000	-1600	680	4000	-1160	230	3400	-1090	50			

► The values for the bearing service life L_{10} relate to an average speed of 4000 r/min. For MCA20/22/26 the speed is 3000 r/min. Depending on the ambient temperatures, the service life of the bearings is also reduced by the grease lifetime.



Permissible radial and axial forces

► Reinforced bearings

Application of forces

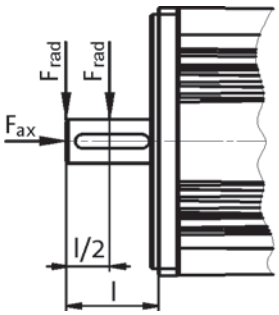

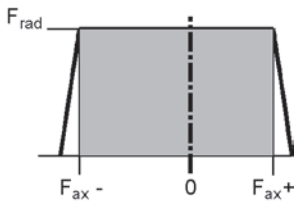

Application of force at l/2

	Bearing service life L_{10}														
	5000 h			10000 h			20000 h			30000 h			50000 h		
	F_{rad} [N]	$F_{ax,-}$ [N]	$F_{ax,+}$ [N]	F_{rad} [N]	$F_{ax,-}$ [N]	$F_{ax,+}$ [N]	F_{rad} [N]	$F_{ax,-}$ [N]	$F_{ax,+}$ [N]	F_{rad} [N]	$F_{ax,-}$ [N]	$F_{ax,+}$ [N]	F_{rad} [N]	$F_{ax,-}$ [N]	$F_{ax,+}$ [N]
MCA20	7100	-970	330	5100	-800	160	3900	-640	0						
MCA22	8500	-1850	1200	7000	-1400	760	5600	-1030	390	4350	-930	290	3200	-800	160
MCA26	10500	-2180	1250	8370	-1530	600	6670	-1130	200	5840	-960	30			

Application of force at l

	Bearing service life L_{10}														
	5000 h			10000 h			20000 h			30000 h			50000 h		
	F_{rad} [N]	$F_{ax,-}$ [N]	$F_{ax,+}$ [N]	F_{rad} [N]	$F_{ax,-}$ [N]	$F_{ax,+}$ [N]	F_{rad} [N]	$F_{ax,-}$ [N]	$F_{ax,+}$ [N]	F_{rad} [N]	$F_{ax,-}$ [N]	$F_{ax,+}$ [N]	F_{rad} [N]	$F_{ax,-}$ [N]	$F_{ax,+}$ [N]
MCA20	6350	-720	80	4100	-680	40	2800	-640	0						
MCA22	7000	-1750	1100	5500	-1300	660	4700	-920	280	3900	-820	180	3000	-700	60
MCA26	9600	-2200	1280	7700	-1280	360	6000	-960	30						

► The values for the bearing service life L_{10} refer to an average speed of 3000 r/min. Depending on the ambient temperatures, the service life of the bearings is also reduced by the grease lifetime.



Rated data, non-ventilated

► The data applies to a mains connection voltage of 3 x 400 V.

	n_N	M_0	M_N	M_{max}	P_N	I_0	I_N	$U_{N, AC}$	f_N	J [1]	$\eta_{100\,\%}$
	[r/min]	[Nm]	[Nm]	[Nm]	[kW]	[A]	[A]	[V]	[Hz]	[kgcm²]	[%]
MCA10I40	3950	2.30	2.00	10.0	0.80	2.60	2.40	390	140	2.40	0.70
MCA13I41	4050	4.60	4.00	32.0	1.70	4.60	4.40	390	140	8.30	75.0
MCA14L20	2000	8.00	6.70	60.0	1.40	3.90	3.30	390	70	19.2	84.0
MCA14L41	4100	8.00	5.40	60.0	2.30	7.70	5.80	390	140	19.2	78.0
MCA17N23	2300	12.8	10.8	100	2.60	6.00	5.50	390	80	36.0	86.0
MCA17N41	4110	12.8	9.50	100	4.10	12.0	10.2	350	140	36.0	83.0
MCA19S23	2340	22.5	16.3	180	4.00	9.90	8.20	390	80	72.0	90.0
MCA19S42	4150	22.5	12.0	180	5.20	19.7	14.0	330	140	72.0	83.0
MCA21X25	2490	39.0	24.6	300	6.40	15.9	13.5	390	85	180	85.0
MCA21X42	4160	39.0	17.0	300	7.40	31.8	19.8	320	140	180	84.0

	R_1	$R_{UV\,20\,°C}$	$R_{UV\,150\,°C}$	R_2	$L_{1\sigma}$	L	$L_{2\sigma}$	n_{max} [2]	m [1]
	[Ω]	[Ω]	[Ω]	[Ω]	[mH]	[mH]	[mH]	[r/min]	[kg]
MCA10I40	4.70	9.40	12.7	5.20	9.80	169	10.0	8000	6.40
MCA13I41	1.70	3.40	4.60	1.41	5.40	92.6	4.90		10.4
MCA14L20	3.00	6.00	8.10	3.13	10.0	269	10.0		15.1
MCA14L41	0.75	1.50	2.00	0.78	2.50	65.8	2.50		
MCA17N23	1.52	3.04	4.10	1.37	6.20	176	6.80		22.9
MCA17N41	0.38	0.76	1.00	0.34	1.50	43.4	1.70		
MCA19S23	0.69	1.38	1.90	0.62	3.20	111	3.90		44.7
MCA19S42	0.18	0.35	0.50	0.15	0.80	28.0	1.00		
MCA21X25	0.36	0.72	1.00	0.36	2.30	78.1	2.80		60.0
MCA21X42	0.090	0.18	0.20	0.090	0.60	19.5	0.70		

[1] Without brake.
[2] Mechanically permissible maximum speed.

The data in the R_1, $L_{1\sigma}$, L, R_2' and $L_{2\sigma}'$ columns is based on a single-phase equivalent circuit diagram at 20°C.

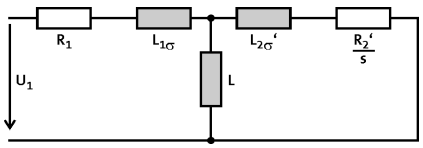



Rated data, IP54 forced ventilated

► The data applies to a mains connection voltage of 3 x 400 V.

	n_N	M_0	M_N	M_{max}	P_N	I_0	I_N	$U_{N, AC}$	f_N	J [1]	$\eta_{100\,\%}$
	[r/min]	[Nm]	[Nm]	[Nm]	[kW]	[A]	[A]	[V]	[Hz]	[kgcm²]	[%]
MCA13I34	3410	7.00	6.30	32.0	2.20	6.30	6.00	390	120	8.30	72.0
MCA14L16	1635	13.5	12.0	60.0	2.10	5.30	4.80	390	60	19.2	80.0
MCA14L35	3455	13.5	10.8	60.0	3.90	10.5	9.10	390	120	19.2	79.0
MCA17N17	1680	23.9	21.5	100	3.80	9.10	8.50	390	60	36.0	83.0
MCA17N35	3480	23.9	19.0	100	6.90	18.1	15.8	390	120	36.0	81.0
MCA19S17	1700	40.0	36.3	180	6.40	15.4	13.9	390	60	72.0	82.0
MCA19S35	3510	40.0	36.0	180	13.2	30.8	28.7	390	120	72.0	85.0
MCA21X17	1710	75.0	61.4	300	11.0	25.8	22.5	390	60	180	85.0
MCA21X35	3520	75.0	55.0	300	20.3	49.5	42.5	390	120	180	88.0
MCA22P08...5F□□	760	120	110	500	8.75	23.4	22.1	345	28	487	80.0
MCA22P14...5F□□	1425	120	107	500	16.0	40.5	37.7	350	50	487	87.0
MCA22P17...5F□□	1670	120	106	500	18.5	46.7	42.7	360	58	487	88.0
MCA22P29...5F□□	2935	120	100	500	30.7	80.9	72.1	360	100	487	87.0
MCA26T05...5F□□	550	220	216	1100	12.4	35.4	34.9	350	19	1335	83.0
MCA26T10...5F□□	1030	220	210	1100	22.7	62.9	61.5	350	36	1335	88.0
MCA26T12...5F□□	1200	220	207	1100	26.0	78.4	75.1	350	41	1335	87.0
MCA26T22...5F□□	2235	220	195	1100	45.6	125	113	340	76	1335	92.0

	R_1	$R_{UV\,20\,°C}$	$R_{UV\,150\,°C}$	R_2	$L_{1\sigma}$	L	$L_{2\sigma}$	n_{max} [2]	m [1]
	[Ω]	[Ω]	[Ω]	[Ω]	[mH]	[mH]	[mH]	[r/min]	[kg]
MCA13I34	1.70	3.40	4.60	1.41	4.90	76.7	4.40	8000	12.0
MCA14L16	3.00	6.00	8.10	3.13	9.50	224	9.30		16.9
MCA14L35	0.75	1.50	2.00	0.78	2.40	56.7	2.30		
MCA17N17	1.52	3.04	4.10	1.37	5.60	144	6.00		25.5
MCA17N35	0.38	0.76	1.00	0.34	1.40	36.9	1.50		
MCA19S17	0.69	1.38	1.90	0.62	2.60	80.9	3.10		48.2
MCA19S35	0.18	0.35	0.50	0.15	0.70	20.3	0.80		
MCA21X17	0.36	0.72	1.00	0.36	2.10	68.9	2.60		63.5
MCA21X35	0.090	0.18	0.20	0.090	0.50	16.8	0.60		
MCA22P08...5F□□	0.54	1.07	1.62	0.48	3.56	94.9	4.80	6500	105
MCA22P14...5F□□		0.36	0.54		3.60	94.2	4.85		
MCA22P17...5F□□	0.13	0.27	0.40	0.12	0.90	23.4	1.21		
MCA22P29...5F□□		0.080	0.12			22.9			
MCA26T05...5F□□	0.29	0.59	0.89	0.25	2.86	66.8	5.04	5500	194
MCA26T10...5F□□		0.20	0.30		2.93	69.2	5.12		
MCA26T12...5F□□	0.080	0.15	0.23	0.062	0.74	18.1	1.29		
MCA26T22...5F□□		0.050	0.075		0.78	19.8			

[1] Without brake.

[2] Mechanically permissible maximum speed.
The permanent speed in case of MCA20, 22 and 26 is limited to 70% of the value.

The data in the R_1, $L_{1\sigma}$, L, R_2' and $L_{2\sigma}'$ columns is based on a single-phase equivalent circuit diagram at 20°C.

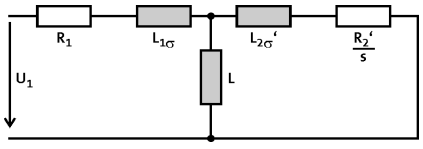



Rated data, IP23s forced ventilated

► The data applies to a mains connection voltage of 3 x 400 V.

	n_N	M_0	M_N	M_{max}	P_N	I_0	I_N	$U_{N, AC}$	f_N	J [1]	$\eta_{100\,\%}$
	[r/min]	[Nm]	[Nm]	[Nm]	[kW]	[A]	[A]	[V]	[Hz]	[kgcm²]	[%]
MCA20X14...2F□□	1420	68.0	61.0	250	9.07	26.0	23.0	350	50	171	82.0
MCA20X29...2F□□	2930	68.0	53.5	250	16.4	52.0	42.4	350	100	171	87.0
MCA22P08...2F□□	760	135	120	500	9.55	26.0	23.5	355	28	487	80.0
MCA22P14...2F□□	1425	135	115	500	17.2	45.1	40.0	360	50	487	86.0
MCA22P17...2F□□	1670	135	112	500	19.6	52.1	44.5	360	58	487	88.0
MCA22P29...2F□□	2935	135	110	500	33.8	90.2	77.8	360	100	487	89.0
MCA26T05...2F□□	550	290	280	1100	16.1	44.0	42.4	350	20	1335	81.0
MCA26T10...2F□□	1030	290	260	1100	28.0	78.0	69.6	350	36	1335	87.0
MCA26T12...2F□□	1200	290	255	1100	32.0	101	83.3	350	41	1335	87.0
MCA26T22...2F□□	2235	290	230	1100	53.8	160	127	340	76	1335	92.0

	R_1	$R_{UV\,20\,°C}$	$R_{UV\,150\,°C}$	R_2	$L_{1\sigma}$	L	$L_{2\sigma}$	n_{max} [2]	m [1]
	[Ω]	[Ω]	[Ω]	[Ω]	[mH]	[mH]	[mH]	[r/min]	[kg]
MCA20X14...2F□□	0.37	0.73	1.10	0.36	2.01	60.2	2.14	6500	64.0
MCA20X29...2F□□	0.090	0.18	0.28	0.090	0.50	14.3	0.54		
MCA22P08...2F□□	0.54	1.07	1.62	0.48	3.50	91.9	4.74		105
MCA22P14...2F□□		0.36	0.54		3.55	90.9	4.79		
MCA22P17...2F□□	0.13	0.27	0.40	0.12	0.90	23.5	1.22		
MCA22P29...2F□□		0.080	0.12			22.9	1.21		
MCA26T05...2F□□	0.29	0.59	0.89	0.25	3.11	72.1	5.08	5500	194
MCA26T10...2F□□		0.20	0.30		3.17	71.4	5.14		
MCA26T12...2F□□	0.080	0.15	0.23	0.062	0.78	18.6	1.30		
MCA26T22...2F□□		0.050	0.077			20.2			

[1] Without brake.
[2] Mechanically permissible maximum speed.
The permanent speed in case of MCA20, 22 and 26 is limited to 70% of the value.

The data in the R_1, $L_{1\sigma}$, L, R_2' and $L_{2\sigma}'$ columns is based on a single-phase equivalent circuit diagram at 20°C.

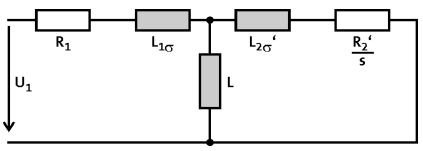



Selection tables, Servo Drives 9400 HighLine

Non-ventilated motors

► The data applies to a mains connection voltage of 3 x 400 V and an inverter switching frequency of 4 kHz.

					E94A□□	E0024	E0034	E0044	E0074	E0094	E0134	E0174	E0244	E0324
					I_N	1.9	3.1	5.0	8.8	11.7	16.3	20.6	29.4	38.4
					$I_{0,max}$	6.0	10.0	16.0	21.0	28.0	39.0	49.5	58.8	76.8
MCA	**M_N**	**n_N**	**I_N**	**P_N**	I_{max}	6.0	10.0	16.0	21.0	28.0	39.0	49.5	58.8	76.8
10I40	2.0	3950	2.4	0.80	M_0	1.1	2.3							
					M_N	1.0	2.0							
					$M_{0,max}$	6.9	10.0							
					M_{max}	6.9	10.0							
					n_{eto}	-	-							
13I41	4.0	4050	4.4	1.70	M_0			4.6	4.6					
					M_N			4.0	4.0					
					$M_{0,max}$			18.9	20.8					
					M_{max}			18.9	20.8					
					n_{eto}			-	-					
14L20	6.7	2000	3.3	1.40	M_0		5.1	8.0						
					M_N		4.4	6.7						
					$M_{0,max}$		25.0	42.8						
					M_{max}		25.0	42.8						
					n_{eto}		-	-						
14L41	5.4	4100	5.8	2.30	M_0			3.5	8.0	8.0				
					M_N			3.5	5.4	5.4				
					$M_{0,max}$			21.5	27.0	31.3				
					M_{max}			21.5	27.0	31.3				
					n_{eto}			-	-	-				
17N23	10.8	2300	5.5	2.60	M_0			9.5	12.8					
					M_N			9.0	10.8					
					$M_{0,max}$			38.0	50.0					
					M_{max}			38.0	50.0					
					n_{eto}			-	-					
17N41	9.5	4110	10.2	4.10	M_0				7.1	11.5	12.8	12.8		
					M_N				6.7	9.5	9.5	9.5		
					$M_{0,max}$				24.0	33.3	45.8	49.9		
					M_{max}				24.0	33.3	45.8	49.9		
					n_{eto}				-	-	-	-		
19S23	16.3	2340	8.2	4.00	M_0				18.4	22.5	22.5			
					M_N				15.6	16.3	16.3			
					$M_{0,max}$				55.0	73.7	86.0			
					M_{max}				55.0	73.7	86.0			
					n_{eto}				-	-	-			
19S42	12.0	4150	14.0	5.20	M_0						15.0	22.5	22.5	
					M_N						12.0	12.0	12.0	
					$M_{0,max}$						48.8	62.0	70.0	
					M_{max}						48.8	62.0	70.0	
					n_{eto}						-	-	-	
21X25	24.6	2490	13.5	6.40	M_0					21.4	39.0	39.0	39.0	
					M_N					19.6	24.6	24.6	24.6	
					$M_{0,max}$					71.7	96.0	126.0	136.0	
					M_{max}					71.7	96.0	126.0	136.0	
					n_{eto}					-	-	-	-	

► I... [A], M... [Nm], n... [r/min], P... [kW]



Selection tables, Servo Drives 9400 HighLine

Non-ventilated motors

► The data applies to a mains connection voltage of 3 x 400 V and an inverter switching frequency of 4 kHz.

					E94A□□	E0024	E0034	E0044	E0074	E0094	E0134	E0174	E0244	E0324
					I_N	1.9	3.1	5.0	8.8	11.7	16.3	20.6	29.4	38.4
					$I_{0,max}$	6.0	10.0	16.0	21.0	28.0	39.0	49.5	58.8	76.8
MCA	**M_N**	**n_N**	**I_N**	**P_N**	I_{max}	6.0	10.0	16.0	21.0	28.0	39.0	49.5	58.8	76.8
21X42	17.0	4160	19.8	7.40	M_0								31.3	39.0
					M_N								17.0	17.0
					$M_{0,max}$								71.7	91.0
					M_{max}								71.7	91.0
					n_{eto}								-	-

► I... [A], M... [Nm], n... [r/min], P... [kW]



Selection tables, Servo Drives 9400 HighLine

Forced ventilated IP54 motors

► The data applies to a mains connection voltage of 3 x 400 V and an inverter switching frequency of 4 kHz.

					E94A□□	E0044	E0074	E0094	E0134	E0174	E0244	E0324	E0474	E0594	E0864
					I_N	5.0	8.8	11.7	16.3	20.6	29.4	38.4	47.0	59.0	86.0
					$I_{0,max}$	16.0	21.0	28.0	39.0	49.5	58.8	76.8	94.0	118.0	172.0
MCA	**M_N**	**n_N**	**I_N**	**P_N**	I_{max}	16.0	21.0	28.0	39.0	49.5	58.8	76.8	94.0	118.0	172.0
13I34	6.3	3410	6.0	2.20	M_0	4.6	7.0	7.0							
					M_N	4.4	6.3	6.3							
					$M_{0,max}$	20.8	26.0	29.2							
					M_{max}	20.8	26.0	29.2							
					n_{eto}	-	-	-							
14L16	12.0	1635	4.8	2.10	M_0	12.0	13.5								
					M_N	12.0	12.0								
					$M_{0,max}$	45.4	52.6								
					M_{max}	45.4	52.6								
					n_{eto}	-	-								
14L35	10.8	3455	9.1	3.90	M_0		10.1	13.5	13.5						
					M_N		9.7	10.8	10.8						
					$M_{0,max}$		32.4	46.0	60.0						
					M_{max}		32.4	46.0	60.0						
					n_{eto}		-	-	-						
17N17	21.5	1680	8.5	3.80	M_0		21.6	23.9	23.9						
					M_N		21.5	21.5	21.5						
					$M_{0,max}$		59.4	81.4	84.5						
					M_{max}		59.4	81.4	84.5						
					n_{eto}		-	-	-						
17N35	19.0	3480	15.8	6.90	M_0				19.4	23.9	23.9				
					M_N				19.0	19.0	19.0				
					$M_{0,max}$				59.2	75.0	90.0				
					M_{max}				59.2	75.0	90.0				
					n_{eto}				-	-	-				
19S17	36.3	1700	13.9	6.40	M_0				40.0	40.0	40.0				
					M_N				36.3	36.3	36.3				
					$M_{0,max}$				105.0	133.0	148.0				
					M_{max}				105.0	133.0	148.0				
					n_{eto}				-	-	-				
19S35	36.0	3510	28.7	13.20	M_0						36.9	40.0	40.0	40.0	
					M_N						36.0	36.0	36.0	36.0	
					$M_{0,max}$						82.0	112.0	132.0	160.0	
					M_{max}						82.0	112.0	132.0	160.0	
					n_{eto}						-	-	-	-	
21X17	61.4	1710	22.5	11.00	M_0					54.4	75.0	75.0	75.0		
					M_N					50.4	61.4	61.4	61.4		
					$M_{0,max}$					134.0	158.0	215.0	246.0		
					M_{max}					134.0	158.0	215.0	246.0		
					n_{eto}					-	-	-	-		
21X35	55.0	3520	42.5	20.30	M_0								63.9	75.0	75.0
					M_N								55.0	55.0	55.0
					$M_{0,max}$								134.0	167.0	232.0
					M_{max}								134.0	167.0	232.0
					n_{eto}								-	-	-

► I... [A], M... [Nm], n... [r/min], P... [kW]



Selection tables, Servo Drives 9400 HighLine

Forced ventilated IP54 motors

► The data applies to a mains connection voltage of 3 x 400 V and an inverter switching frequency of 8 kHz.

					E94A□□	E0174	E0244	E0324	E0474	E0594	E0864	E1044	E1454	E1724	E2024	E2454
					I_N	16.5	23.5	32.0	41.0	41.0	73.0	78.0	102.0	120.0	131.0	160.0
					$I_{0,max}$	49.5	58.8	76.8	94.0	118.0	172.0	208.0	261.0	310.0	364.0	441.0
MCA	**M_N**	**n_N**	**I_N**	**P_N**	I_{max}	49.5	58.8	76.8	94.0	118.0	172.0	208.0	261.0	310.0	364.0	441.0
22P08-...5F□□	110.0	760	22.1	8.80	M_0	64.0	110.0	120.0								
					M_N	64.0	110.0	110.0								
					$M_{0,max}$	261.0	313.0	402.0								
					M_{max}	261.0	313.0	402.0								
					n_{eto}	-	-	-								
22P14-...5F□□	107.0	1425	37.7	16.00	M_0			82.0	120.0	120.0						
					M_N			82.0	107.0	107.0						
					$M_{0,max}$			242.0	300.0	372.0						
					M_{max}			242.0	300.0	372.0						
					n_{eto}			-	-	-						
22P17-...5F□□	105.0	1670	42.7	18.50	M_0					99.0	120.0					
					M_N					99.0	106.0					
					$M_{0,max}$					325.0	463.0					
					M_{max}					325.0	463.0					
					n_{eto}					-	-					
22P29-...5F□□	100.0	2935	72.1	30.70	M_0							110.0	120.0	120.0		
					M_N							100.0	100.0	100.0		
					$M_{0,max}$							335.0	416.0	465.0		
					M_{max}							335.0	416.0	465.0		
					n_{eto}							-	-	-		
26T05-...5F□□	216.0	550	34.9	12.40	M_0			191.0	220.0	220.0	220.0					
					M_N			191.0	216.0	216.0	216.0					
					$M_{0,max}$			531.0	665.0	826.0	1010.0					
					M_{max}			531.0	665.0	826.0	1010.0					
					n_{eto}			-	-	-	-					
26T10-...5F□□	210.0	1030	61.5	22.70	M_0					77.0	220.0	220.0	220.0			
					M_N					77.0	210.0	210.0	210.0			
					$M_{0,max}$					472.0	713.0	855.0	1044.0			
					M_{max}					472.0	713.0	855.0	1044.0			
					n_{eto}					-	-	-	-			
26T12-...5F□□	207.0	1200	75.1	26.00	M_0						204.0	219.0	220.0	220.0		
					M_N						204.0	207.0	207.0	207.0		
					$M_{0,max}$						502.0	609.0	739.0	819.0		
					M_{max}						502.0	609.0	739.0	819.0		
					n_{eto}						-	-	-	-		
26T22-...5F□□	195.0	2235	112.9	45.60	M_0								154.0	211.0	220.0	220.0
					M_N								154.0	195.0	195.0	195.0
					$M_{0,max}$								523.0	611.0	711.0	843.0
					M_{max}								523.0	611.0	711.0	843.0
					n_{eto}								-	-	-	-

► I... [A], M... [Nm], n... [r/min], P... [kW]
► If the motors are operated at a lower switching frequency, please contact your Lenze sales office!
► When operating at 4 kHz, the motor generates just 95 % of its rated torque with increased noise emissions.



Selection tables, Servo Drives 9400 HighLine

Forced ventilated IP23s motors

► The data applies to a mains connection voltage of 3 x 400 V and an inverter switching frequency of 8 kHz.

					E94A□□	E0174	E0244	E0324	E0474	E0594	E0864	E1044	E1454	E1724	E2024	E2454	E2924
					I_N	16.5	23.5	32.0	41.0	41.0	73.0	78.0	102.0	120.0	131.0	160.0	191.0
					$I_{0,max}$	49.5	58.8	76.8	94.0	118.0	172.0	208.0	261.0	310.0	364.0	441.0	526.0
MCA	**M_N**	**n_N**	**I_N**	**P_N**	I_{max}	49.5	58.8	76.8	94.0	118.0	172.0	208.0	261.0	310.0	364.0	441.0	526.0
20X14-...2F□□	61.0	1420	23.0	9.10	M_0	32.5	66.0										
					M_N	32.5	61.0										
					$M_{0,max}$	154.2	190.0										
					M_{max}	154.2	190.0										
					n_{eto}	-	-										
20X29-...2F□□	53.5	2930	42.4	16.40	M_0			28.0	51.6	51.6							
					M_N			28.0	51.6	51.6							
					$M_{0,max}$			116.0	148.2	192.8							
					M_{max}			116.0	148.2	192.8							
					n_{eto}			-	-	-							
22P08-...2F□□	120.0	760	23.5	9.60	M_0		120.0	135.0									
					M_N		120.0	120.0									
					$M_{0,max}$		313.0	402.0									
					M_{max}		313.0	402.0									
					n_{eto}		-	-									
22P14-...2F□□	115.0	1425	40.0	17.20	M_0				118.0	118.0							
					M_N				115.0	115.0							
					$M_{0,max}$				300.0	372.0							
					M_{max}				300.0	372.0							
					n_{eto}				-	-							
22P17-...2F□□	112.0	1670	44.5	19.60	M_0					99.0	135.0						
					M_N					99.0	112.0						
					$M_{0,max}$					325.0	463.0						
					M_{max}					325.0	463.0						
					n_{eto}					-	-						
22P29-...2F□□	110.0	2935	77.8	33.80	M_0							110.0	135.0	135.0			
					M_N							110.0	110.0	110.0			
					$M_{0,max}$							335.0	416.0	486.0			
					M_{max}							335.0	416.0	486.0			
					n_{eto}							-	-	-			
26T05-...2F□□	280.0	550	42.4	16.10	M_0				268.0	268.0	290.0						
					M_N				268.0	268.0	280.0						
					$M_{0,max}$				665.0	826.0	1100.0						
					M_{max}				665.0	826.0	1100.0						
					n_{eto}				-	-	-						
26T10-...2F□□	260.0	1030	69.6	28.00	M_0						270.0	290.0	290.0				
					M_N						260.0	260.0	260.0				
					$M_{0,max}$						713.0	855.0	1044.0				
					M_{max}						713.0	855.0	1044.0				
					n_{eto}						-	-	-				

► I... [A], M... [Nm], n... [r/min], P... [kW]
► If the motors are operated at a lower switching frequency, please contact your Lenze sales office!
► When operating at 4 kHz, the motor generates just 95 % of its rated torque with increased noise emissions.



Selection tables, Servo Drives 9400 HighLine

Forced ventilated IP23s motors

► The data applies to a mains connection voltage of 3 x 400 V and an inverter switching frequency of 8 kHz.

					E94A□□	E0174	E0244	E0324	E0474	E0594	E0864	E1044	E1454	E1724	E2024	E2454	E2924
					I_N	16.5	23.5	32.0	41.0	41.0	73.0	78.0	102.0	120.0	131.0	160.0	191.0
					$I_{0,max}$	49.5	58.8	76.8	94.0	118.0	172.0	208.0	261.0	310.0	364.0	441.0	526.0
MCA	**M_N**	**n_N**	**I_N**	**P_N**	I_{max}	49.5	58.8	76.8	94.0	118.0	172.0	208.0	261.0	310.0	364.0	441.0	526.0
26T12-...2F□□	255.0	1200	83.3	32.00	M_0						204.0	219.0	290.0	290.0	290.0		
					M_N						204.0	219.0	255.0	255.0	255.0		
					$M_{0,max}$						502.0	609.0	739.0	840.0	896.0		
					M_{max}						502.0	609.0	739.0	840.0	896.0		
					n_{eto}						-	-	-	-	-		
26T22-...2F□□	230.0	2235	126.7	53.80	M_0									211.0	242.0	290.0	290.0
					M_N									211.0	230.0	230.0	230.0
					$M_{0,max}$									611.0	711.0	843.0	1001.0
					M_{max}									611.0	711.0	843.0	1001.0
					n_{eto}									-	-	-	-

► I... [A], M... [Nm], n... [r/min], P... [kW]
► If the motors are operated at a lower switching frequency, please contact your Lenze sales office!
► When operating at 4 kHz, the motor generates just 95 % of its rated torque with increased noise emissions.





Selection tables, Inverter Drives 8400 TopLine

Non-ventilated motors

► The data applies to a mains connection voltage of 3 x 400 V and an inverter switching frequency of 8 kHz.

					E84AVTC	□5514	□7514	□1124	□1524	□2224	□3024	□4024	□5524	□7524	□1134	□1534	□1834
					I_N	1.8	2.4	3.2	3.9	5.9	7.3	9.5	13.0	16.5	23.5	32.0	39.0
					$I_{0,max}$	2.7	3.6	4.8	5.9	8.4	11.0	14.3	19.5	26.4	32.9	43.2	60.0
MCA	**M_N**	**n_N**	**I_N**	**P_N**	**I_{max}**	3.6	4.8	6.4	7.8	11.2	14.6	19.0	26.0	33.0	47.0	64.0	78.0
10I40	2.0	3950	2.4	0.80	M_0	-	2.3	2.3	2.3	2.3							
					M_N	-	1.9	1.9	1.9	1.9							
					$M_{0,max}$	4.2	5.8	8.0	9.8	10.0							
					M_{max}	4.2	5.8	8.0	9.8	10.0							
					n_{eto}	-	-	-	-	-							
13I41	4.0	4050	4.4	1.70	M_0			-	-	4.6	4.6	4.6					
					M_N			-	-	4.0	4.0	4.0					
					$M_{0,max}$			7.6	9.6	14.3	18.9	22.9					
					M_{max}			7.6	9.6	14.3	18.9	22.9					
					n_{eto}			-	-	-	-	-					
14L20	6.7	2000	3.3	1.40	M_0		-	-	8.0	8.0	8.0						
					M_N		-	-	6.7	6.7	6.7						
					$M_{0,max}$		11.6	16.2	20.1	29.4	34.7						
					M_{max}		11.6	16.2	20.1	29.4	34.7						
					n_{eto}		-	-	-	-	-						
14L41	5.4	4100	5.8	2.30	M_0					-	8.0	8.0	8.0				
					M_N					-	5.4	5.4	5.4				
					$M_{0,max}$					14.1	19.0	25.1	31.0				
					M_{max}					14.1	19.0	25.1	31.0				
					n_{eto}					-	-	-	-				
17N23	10.8	2300	5.5	2.60	M_0				-	12.8	12.8	12.8	12.8				
					M_N				-	10.8	10.8	10.8	10.8				
					$M_{0,max}$				17.1	25.3	33.3	43.8	51.1				
					M_{max}				17.1	25.3	33.3	43.8	51.1				
					n_{eto}				-	-	-	-	-				
17N41	9.5	4110	10.2	4.10	M_0						-	-	12.8	12.8	12.8		
					M_N						-	-	9.5	9.5	9.5		
					$M_{0,max}$						16.5	22.3	31.1	39.9	49.5		
					M_{max}						16.5	22.3	31.1	39.9	49.5		
					n_{eto}						-	-	-	-	-		
19S23	16.3	2340	8.2	4.00	M_0						-	22.5	22.5	22.5			
					M_N						-	16.3	16.3	16.3			
					$M_{0,max}$						32.8	43.6	60.9	77.5			
					M_{max}						32.8	43.7	61.0	77.5			
					n_{eto}						-	-	-	-			
19S42	12.0	4150	14.0	5.20	M_0								-	22.5	22.5	22.5	
					M_N								-	12.0	12.0	12.0	
					$M_{0,max}$								28.5	37.0	53.7	64.7	
					M_{max}								28.5	37.0	53.8	64.7	
					n_{eto}								-	-	-	-	
21X25	24.6	2490	13.5	6.40	M_0							-	-	39.0	39.0	39.0	
					M_N							-	-	24.5	24.5	24.5	
					$M_{0,max}$							33.6	46.7	59.3	85.9	97.3	
					M_{max}							33.6	46.7	59.3	85.9	97.6	
					n_{eto}							-	-	-	-	-	

► I... [A], M... [Nm], n... [r/min], P... [kW]



Selection tables, Inverter Drives 8400 TopLine

Non-ventilated motors

► The data applies to a mains connection voltage of 3 x 400 V and an inverter switching frequency of 8 kHz.

					E84AVTC	□5514	□7514	□1124	□1524	□2224	□3024	□4024	□5524	□7524	□1134	□1534	□1834
					I_N	1.8	2.4	3.2	3.9	5.9	7.3	9.5	13.0	16.5	23.5	32.0	39.0
					$I_{0,max}$	2.7	3.6	4.8	5.9	8.4	11.0	14.3	19.5	26.4	32.9	43.2	60.0
MCA	**M_N**	**n_N**	**I_N**	**P_N**	I_{max}	3.6	4.8	6.4	7.8	11.2	14.6	19.0	26.0	33.0	47.0	64.0	78.0
21X42	17.0	4160	19.8	7.40	M_0									-	39.0	39.0	39.0
					M_N									-	17.0	17.0	17.0
					$M_{0,max}$									35.3	52.2	72.1	88.5
					M_{max}									35.3	52.2	72.1	88.5
					n_{eto}									-	-	-	-

► I... [A], M... [Nm], n... [r/min], P... [kW]



Selection tables, Inverter Drives 8400 TopLine

Forced ventilated IP54 motors

► The data applies to a mains connection voltage of 3 x 400 V and an inverter switching frequency of 8 kHz.

					E84AVTC	□1524	□2224	□3024	□4024	□5524	□7524
					I_N	3.9	5.9	7.3	9.5	13.0	16.5
					$I_{0,max}$	5.9	8.4	11.0	14.3	19.5	26.4
MCA	M_N	n_N	I_N	P_N	I_{max}	7.8	11.2	14.6	19.0	26.0	33.0
13I34	6.3	3410	6.0	2.20	M_0		-	7.0	7.0	7.0	
					M_N		-	6.2	6.2	6.2	
					$M_{0,max}$		16.0	21.4	28.2	32.0	
					M_{max}		16.0	21.4	28.2	32.0	
					n_{eto}		-	-	-	-	
14L16	12.0	1635	4.8	2.10	M_0	-	13.5	13.5	13.5		
					M_N	-	12.3	12.3	12.3		
					$M_{0,max}$	23.4	34.7	45.5	50.8		
					M_{max}	23.4	34.7	45.5	50.8		
					n_{eto}	-	-	-	-		
14L35	10.8	3455	9.1	3.90	M_0			-	13.5	13.5	13.5
					M_N			-	10.8	10.8	10.8
					$M_{0,max}$			21.1	28.4	39.8	51.1
					M_{max}			21.1	28.4	39.8	51.1
					n_{eto}			-	-	-	-
17N17	21.5	1680	8.5	3.80	M_0			-	23.9	23.9	23.9
					M_N			-	21.6	21.6	21.6
					$M_{0,max}$			42.1	55.9	77.5	93.3
					M_{max}			42.2	56.0	77.5	93.3
					n_{eto}			-	-	-	-
17N35	19.0	3480	15.8	6.90	M_0					-	23.9
					M_N					-	18.9
					$M_{0,max}$					38.0	49.5
					M_{max}					38.0	49.5
					n_{eto}					-	-
19S17	36.3	1700	13.9	6.40	M_0					-	40.0
					M_N					-	36.0
					$M_{0,max}$					71.6	94.7
					M_{max}					71.6	94.7
					n_{eto}					-	-
19S35	36.0	3510	28.7	13.20	M_0						
					M_N						
					$M_{0,max}$						
					M_{max}						
					n_{eto}						
21X17	61.4	1710	22.5	11.00	M_0						-
					M_N						-
					$M_{0,max}$						99.0
					M_{max}						99.0
					n_{eto}						-
21X35	55.0	3520	42.5	20.30	M_0						
					M_N						
					$M_{0,max}$						
					M_{max}						
					n_{eto}						

► I... [A], M... [Nm], n... [r/min], P... [kW]



Selection tables, Inverter Drives 8400 TopLine

Forced ventilated IP54 motors

► The data applies to a mains connection voltage of 3 x 400 V and an inverter switching frequency of 8 kHz.

□1134	□1534	□1834	□2234	□3034	□3734	□4534	E84AVTC					
23.5	32.0	39.0	47.0	61.0	76.0	89.0	I_N					
32.9	43.2	60.0	70.5	91.5	114.0	133.5	$I_{0,max}$					
47.0	64.0	78.0	94.0	122.0	152.0	178.0	I_{max}	P_N	I_N	n_N	M_N	MCA
							M_0	2.20	6.0	3410	6.3	13I34
							M_N					
							$M_{0,max}$					
							M_{max}					
							n_{eto}					
							M_0	2.10	4.8	1635	12.0	14L16
							M_N					
							$M_{0,max}$					
							M_{max}					
							n_{eto}					
13.5							M_0	3.90	9.1	3455	10.8	14L35
10.8							M_N					
56.5							$M_{0,max}$					
56.6							M_{max}					
-							n_{eto}					
							M_0	3.80	8.5	1680	21.5	17N17
							M_N					
							$M_{0,max}$					
							M_{max}					
							n_{eto}					
23.9	23.9						M_0	6.90	15.8	3480	19.0	17N35
18.9	18.9						M_N					
72.5	97.8						$M_{0,max}$					
72.5	97.8						M_{max}					
-	-						n_{eto}					
40.0	40.0						M_0	6.40	13.9	1700	36.3	19S17
36.0	36.0						M_N					
138.9	165.2						$M_{0,max}$					
139.0	165.3						M_{max}					
-	-						n_{eto}					
-	40.0	40.0	40.0	40.0			M_0	13.20	28.7	3510	36.0	19S35
-	35.9	35.9	35.9	35.9			M_N					
55.1	78.8	97.8	112.8	146.2			$M_{0,max}$					
55.1	78.8	97.8	112.9	146.2			M_{max}					
-	-	-	-	-			n_{eto}					
75.0	75.0	75.0	75.0				M_0	11.00	22.5	1710	61.4	21X17
61.4	61.4	61.4	61.4				M_N					
143.7	198.5	242.2	277.2				$M_{0,max}$					
144.0	198.7	242.3	277.2				M_{max}					
-	-	-	-				n_{eto}					
	-	-	75.0	75.0	75.0	75.0	M_0	20.30	42.5	3520	55.0	21X35
	-	-	55.1	55.1	55.1	55.1	M_N					
	97.5	120.6	138.5	177.5	216.7	267.8	$M_{0,max}$					
	97.5	120.6	138.6	178.0	217.5	269.8	M_{max}					
	-	-	-	-	-	-	n_{eto}					

► I... [A], M... [Nm], n... [r/min], P... [kW]



Selection tables, Inverter Drives 8400 TopLine

Forced ventilated IP54 motors

► The data applies to a mains connection voltage of 3 x 400 V and an inverter switching frequency of 8 kHz.

					E84AVTC	□7524	□1134	□1534	□1834	□2234	□3034	□3734	□4534
					I_N	16.5	23.5	32.0	39.0	47.0	61.0	76.0	89.0
					$I_{0,max}$	26.4	32.9	43.2	60.0	70.5	91.5	114.0	133.5
MCA	**M_N**	**n_N**	**I_N**	**P_N**	I_{max}	33.0	47.0	64.0	78.0	94.0	122.0	152.0	178.0
22P08-...5F□□	110.0	760	22.1	8.80	M_0	-	120.0	120.0	120.0	120.0			
					M_N	-	110.6	110.6	110.6	110.6			
					$M_{0,max}$	157.8	233.4	323.3	396.6	394.3			
					M_{max}	157.8	233.5	323.3	396.6	394.3			
					n_{eto}	-	-	-	-	-			
22P14-...5F□□	107.0	1425	37.7	16.00	M_0			-	120.0	120.0	120.0	120.0	120.0
					M_N			-	107.2	107.2	107.2	107.2	107.2
					$M_{0,max}$			186.5	232.5	268.8	345.7	422.7	458.8
					M_{max}			186.7	232.7	269.0	346.3	423.7	460.9
					n_{eto}			-	-	-	-	-	-
22P17-...5F□□	105.0	1670	42.7	18.50	M_0			-	-	120.0	120.0	120.0	120.0
					M_N			-	-	105.8	105.8	105.8	105.8
					$M_{0,max}$			162.7	204.2	236.9	307.8	374.9	461.2
					M_{max}			162.7	204.2	237.1	308.3	377.0	462.4
					n_{eto}			-	-	-	-	-	-
22P29-...5F□□	100.0	2935	72.1	30.70	M_0						-	120.0	120.0
					M_N						-	99.9	99.9
					$M_{0,max}$						180.5	224.5	270.5
					M_{max}						180.8	226.0	271.4
					n_{eto}						-	-	-

► I... [A], M... [Nm], n... [r/min], P... [kW]
► If the motors are operated at a lower switching frequency, please contact your Lenze sales office!



Selection tables, Inverter Drives 8400 TopLine

Forced ventilated IP23s motors

► The data applies to a mains connection voltage of 3 x 400 V and an inverter switching frequency of 8 kHz.

					E84AVTC	□7524	□1134	□1534	□1834	□2234	□3034	□3734	□4534
					I_N	16.5	23.5	32.0	39.0	47.0	61.0	76.0	89.0
					$I_{0,max}$	26.4	32.9	43.2	60.0	70.5	91.5	114.0	133.5
MCA	**M_N**	**n_N**	**I_N**	**P_N**	I_{max}	33.0	47.0	64.0	78.0	94.0	122.0	152.0	178.0
20X14-...2F□□	61.0	1420	23.0	9.10	M_0	-	67.0	68.0	68.0	68.0			
					M_N	-	61.2	61.2	61.2	61.2			
					$M_{0,max}$	94.8	139.9	192.6	235.5	250.0			
					M_{max}	94.9	139.9	192.8	235.7	250.0			
					n_{eto}	-	-	-	-	-			
20X29-...2F□□	53.5	2930	42.4	16.40	M_0			-	-	57.0	68.0	68.0	68.0
					M_N			-	-	53.4	53.4	53.4	53.4
					$M_{0,max}$			96.8	121.2	140.3	182.5	222.1	250.0
					M_{max}			96.8	121.2	140.4	182.6	223.0	250.0
					n_{eto}			-	-	-	-	-	-
22P08-...2F□□	120.0	760	23.5	9.60	M_0	-	135.0	135.0	135.0	135.0			
					M_N	-	120.6	120.6	120.6	120.6			
					$M_{0,max}$	157.8	234.2	325.4	401.4	400.9			
					M_{max}	157.8	234.8	325.8	401.4	400.9			
					n_{eto}	-	-	-	-	-			
22P14-...2F□□	115.0	1425	40.0	17.20	M_0			-	-	135.0	135.0	135.0	135.0
					M_N			-	-	115.3	115.3	115.3	115.3
					$M_{0,max}$			188.4	235.1	270.8	350.2	425.8	493.6
					M_{max}			188.7	235.1	271.0	350.3	428.1	496.1
					n_{eto}			-	-	-	-	-	-
22P17-...2F□□	112.0	1670	44.5	19.60	M_0			-	-	135.0	135.0	135.0	135.0
					M_N			-	-	112.1	112.1	112.1	112.1
					$M_{0,max}$			163.1	204.6	237.9	309.7	376.9	463.1
					M_{max}			163.1	204.6	238.2	310.6	379.0	465.2
					n_{eto}			-	-	-	-	-	-
22P29-...2F□□	110.0	2935	77.8	33.80	M_0						-	-	135.0
					M_N						-	-	110.0
					$M_{0,max}$						180.0	224.4	268.2
					M_{max}						180.7	225.0	269.4
					n_{eto}						-	-	-

► I... [A], M... [Nm], n... [r/min], P... [kW]
► If the motors are operated at a lower switching frequency, please contact your Lenze sales office!



Selection tables, Servo Drives ECS

Non-ventilated motors

► The data applies to a mains connection voltage of 3 x 400 V and an inverter switching frequency of 4 kHz.

					ECS□□	008C□B	016C□B	032C□B	048C□B	064C□B
					I_N	4.0	8.0	12.7	17.0	20.0
					$I_{0,max}$	4.6	9.1	18.1	27.2	36.3
MCA	M_N	n_N	I_N	P_N	I_{max}	8.0	16.0	32.0	48.0	64.0
10I40	2.0	3950	2.4	0.80	M_0	2.3				
					M_N	2.0				
					$M_{0,max}$	5.6				
					M_{max}	8.1				
					n_{eto}	-				
13I41	4.0	4050	4.4	1.70	M_0	3.0	4.6			
					M_N	3.0	4.0			
					$M_{0,max}$	4.3	11.0			
					M_{max}	9.4	18.2			
					n_{eto}	-	-			
14L20	6.7	2000	3.3	1.40	M_0	8.0	8.0			
					M_N	6.7	6.7			
					$M_{0,max}$	10.7	25.3			
					M_{max}	21.6	42.8			
					n_{eto}	-	-			
14L41	5.4	4100	5.8	2.30	M_0		8.0	8.0		
					M_N		5.4	5.4		
					$M_{0,max}$		11.0	24.0		
					M_{max}		20.7	29.1		
					n_{eto}		-	-		
17N23	10.8	2300	5.5	2.60	M_0		12.8	12.8		
					M_N		10.8	10.8		
					$M_{0,max}$		20.5	43.5		
					M_{max}		40.2	63.7		
					n_{eto}		-	-		
17N41	9.5	4110	10.2	4.10	M_0		6.1	12.8	12.8	
					M_N		6.1	9.5	9.5	
					$M_{0,max}$		7.8	21.5	33.5	
					M_{max}		17.4	29.6	57.7	
					n_{eto}		-	-	-	
19S23	16.3	2340	8.2	4.00	M_0		15.1	22.5		
					M_N		15.1	16.3		
					$M_{0,max}$		18.7	43.5		
					M_{max}		38.5	67.9		
					n_{eto}		-	-		
19S42	12.0	4150	14.0	5.20	M_0			9.8	16.7	
					M_N			9.8	12.0	
					$M_{0,max}$			18.4	31.9	
					M_{max}			29.9	58.2	
					n_{eto}			-	-	
21X25	24.6	2490	13.5	6.40	M_0			21.0	39.0	
					M_N			21.0	24.6	
					$M_{0,max}$			41.0	64.5	
					M_{max}			64.4	120.5	
					n_{eto}			-	-	

► I... [A], M... [Nm], n... [r/min], P... [kW]



Selection tables, Servo Drives ECS

Non-ventilated motors

► The data applies to a mains connection voltage of 3 x 400 V and an inverter switching frequency of 4 kHz.

					ECS□□	008C□B	016C□B	032C□B	048C□B	064C□B
					I_N	4.0	8.0	12.7	17.0	20.0
					$I_{0,max}$	4.6	9.1	18.1	27.2	36.3
MCA	**M_N**	**n_N**	**I_N**	**P_N**	I_{max}	8.0	16.0	32.0	48.0	64.0
21X42	17.0	4160	19.8	7.40	M_0				13.0	17.0
					M_N				13.0	17.0
					$M_{0,max}$				30.0	45.0
					M_{max}				59.4	83.0
					n_{eto}				-	-

► I... [A], M... [Nm], n... [r/min], P... [kW]



Selection tables, Servo Drives ECS

Forced ventilated IP54 motors

► The data applies to a mains connection voltage of 3 x 400 V and an inverter switching frequency of 4 kHz.

					ECS□□	008C□B	016C□B	032C□B	048C□B	064C□B
					I_N	4.0	8.0	12.7	17.0	20.0
					$I_{0,max}$	4.6	9.1	18.1	27.2	36.3
MCA	**M_N**	**n_N**	**I_N**	**P_N**	I_{max}	8.0	16.0	32.0	48.0	64.0
13I34	6.3	3410	6.0	2.20	M_0		7.0			
					M_N		6.3			
					$M_{0,max}$		10.7			
					M_{max}		20.8			
					n_{eto}		-			
14L16	12.0	1635	4.8	2.10	M_0	8.9	13.5			
					M_N	8.9	12.0			
					$M_{0,max}$	11.5	25.4			
					M_{max}	21.6	46.7			
					n_{eto}	-	-			
14L35	10.8	3455	9.1	3.90	M_0		8.3	13.5	13.5	
					M_N		8.3	10.8	10.8	
					$M_{0,max}$		11.0	27.0	41.0	
					M_{max}		22.2	42.0	60.0	
					n_{eto}		-	-	-	
17N17	21.5	1680	8.5	3.80	M_0		19.5	23.9		
					M_N		19.5	21.5		
					$M_{0,max}$		23.0	53.0		
					M_{max}		44.8	80.0		
					n_{eto}		-	-		
17N35	19.0	3480	15.8	6.90	M_0			12.7	23.0	
					M_N			12.7	19.0	
					$M_{0,max}$			23.0	37.5	
					M_{max}			37.7	64.4	
					n_{eto}			-	-	
19S17	36.3	1700	13.9	6.40	M_0			28.3	40.0	40.0
					M_N			28.3	36.3	36.3
					$M_{0,max}$			46.5	72.0	98.0
					M_{max}			75.4	130.8	158.9
					n_{eto}			-	-	-
21X17	61.4	1710	22.5	11.00	M_0					52.5
					M_N					52.5
					$M_{0,max}$					107.0
					M_{max}					190.0
					n_{eto}					-

► I... [A], M... [Nm], n... [r/min], P... [kW]



Selection tables, Servo Inverter 9300

Non-ventilated motors

► The data applies to a mains connection voltage of 3 x 400 V and an inverter switching frequency of 8 kHz.

					EVS	9322-E□	9323-E□	9324-E□	9325-E□	9326-E□	9327-E□	9328-E□	9329-E□
					I_N	2.5	3.9	7.0	13.0	23.5	32.0	47.0	59.0
					$I_{0,max}$	3.8	5.9	10.5	19.5	23.5	32.0	47.0	52.0
MCA	M_N	n_N	I_N	P_N	I_{max}	3.8	5.9	10.5	19.5	35.3	48.0	70.5	88.5
10I40	2.0	3950	2.4	0.80	M_0	2.2	2.3						
					M_N	2.0	2.0						
					$M_{0,max}$	4.4	7.3						
					M_{max}	4.4	7.3						
					n_{eto}	-	-						
13I41	4.0	4050	4.4	1.70	M_0			4.6	4.6				
					M_N			4.0	4.0				
					$M_{0,max}$			12.6	19.5				
					M_{max}			12.6	19.5				
					n_{eto}			-	-				
14L20	6.7	2000	3.3	1.40	M_0		8.0	8.0					
					M_N		6.7	6.7					
					$M_{0,max}$		15.1	29.3					
					M_{max}		15.1	29.3					
					n_{eto}		-	-					
14L41	5.4	4100	5.8	2.30	M_0			7.0	8.0				
					M_N			5.4	5.4				
					$M_{0,max}$			13.2	26.0				
					M_{max}			13.2	26.0				
					n_{eto}			-	-				
17N23	10.8	2300	5.5	2.60	M_0			12.8	12.8				
					M_N			10.8	10.8				
					$M_{0,max}$			24.4	46.2				
					M_{max}			24.4	46.2				
					n_{eto}			-	-				
17N41	9.5	4110	10.2	4.10	M_0				12.8	12.8	12.8		
					M_N				9.5	9.5	9.5		
					$M_{0,max}$				23.4	37.0	54.0		
					M_{max}				23.4	43.7	59.4		
					n_{eto}				-	-	-		
19S23	16.3	2340	8.2	4.00	M_0				22.5	22.5			
					M_N				16.3	16.3			
					$M_{0,max}$				47.2	78.0			
					M_{max}				47.2	88.2			
					n_{eto}				-	-			
19S42	12.0	4150	14.0	5.20	M_0				10.0	22.5	22.5		
					M_N				10.0	12.0	12.0		
					$M_{0,max}$				20.7	33.5	51.0		
					M_{max}				20.7	43.3	60.7		
					n_{eto}				-	-	-		
21X25	24.6	2490	13.5	6.40	M_0				23.7	39.0	39.0		
					M_N				23.7	24.6	24.6		
					$M_{0,max}$				46.2	66.0	84.0		
					M_{max}				46.2	78.0	92.4		
					n_{eto}				-	-	-		

► I... [A], M... [Nm], n... [r/min], P... [kW]



Selection tables, Servo Inverter 9300

Non-ventilated motors

► The data applies to a mains connection voltage of 3 x 400 V and an inverter switching frequency of 8 kHz.

					EVS	9322-E□	9323-E□	9324-E□	9325-E□	9326-E□	9327-E□	9328-E□	9329-E□
					I_N	2.5	3.9	7.0	13.0	23.5	32.0	47.0	59.0
					$I_{0,max}$	3.8	5.9	10.5	19.5	23.5	32.0	47.0	52.0
MCA	**M_N**	**n_N**	**I_N**	**P_N**	I_{max}	3.8	5.9	10.5	19.5	35.3	48.0	70.5	88.5
21X42	17.0	4160	19.8	7.40	M_0					24.0	39.0	39.0	39.0
					M_N					17.0	17.0	17.0	17.0
					$M_{0,max}$					24.0	47.0	84.0	94.0
					M_{max}					43.9	63.3	96.8	123.0
					n_{eto}					-	-	-	-

► I... [A], M... [Nm], n... [r/min], P... [kW]



Selection tables, Servo Inverter 9300

Forced ventilated IP54 motors

► The data applies to a mains connection voltage of 3 x 400 V and an inverter switching frequency of 8 kHz.

					EVS	9324-E□	9325-E□	9326-E□	9327-E□	9328-E□	9329-E□	9330-E□	9331-E□
					I_N	7.0	13.0	23.5	32.0	47.0	59.0	89.0	110.0
					$I_{0,max}$	10.5	19.5	23.5	32.0	47.0	52.0	80.0	110.0
MCA	M_N	n_N	I_N	P_N	I_{max}	10.5	19.5	35.3	48.0	70.5	88.5	133.5	165.0
13I34	6.3	3410	6.0	2.20	M_0	7.0	7.0						
					M_N	6.3	6.3						
					$M_{0,max}$	13.0	25.0						
					M_{max}	13.0	25.0						
					n_{eto}	-	-						
14L16	12.0	1635	4.8	2.10	M_0	13.5							
					M_N	12.0							
					$M_{0,max}$	29.6							
					M_{max}	29.6							
					n_{eto}	-							
14L35	10.8	3455	9.1	3.90	M_0		13.5	13.5					
					M_N		10.8	10.8					
					$M_{0,max}$		29.3	47.0					
					M_{max}		29.3	53.8					
					n_{eto}		-	-					
17N17	21.5	1680	8.5	3.80	M_0		23.9						
					M_N		21.5						
					$M_{0,max}$		57.2						
					M_{max}		57.2						
					n_{eto}		-						
17N35	19.0	3480	15.8	6.90	M_0			23.9	23.9	23.9			
					M_N			19.0	19.0	19.0			
					$M_{0,max}$			27.5	57.0	89.0			
					M_{max}			50.7	69.2	100.2			
					n_{eto}			-	-	-			
19S17	36.3	1700	13.9	6.40	M_0		34.0	40.0	40.0				
					M_N		34.0	36.3	36.3				
					$M_{0,max}$		50.1	76.0	112.0				
					M_{max}		50.1	95.9	130.8				
					n_{eto}		-	-	-				
19S35	36.0	3510	28.7	13.20	M_0			21.0	39.0	40.0	40.0	40.0	
					M_N			21.0	36.0	36.0	36.0	36.0	
					$M_{0,max}$			21.0	39.0	73.0	80.0	161.5	
					M_{max}			45.7	67.6	104.3	132.9	180.0	
					n_{eto}			-	-	-	-	-	
21X17	61.4	1710	22.5	11.00	M_0			65.5	75.0	75.0	75.0		
					M_N			61.4	61.4	61.4	61.4		
					$M_{0,max}$			65.5	102.0	178.0	200.0		
					M_{max}			104.1	143.3	210.7	257.3		
					n_{eto}			-	-	-	-		
21X35	55.0	3520	42.5	20.30	M_0					68.0	75.0	75.0	75.0
					M_N					55.0	55.0	55.0	55.0
					$M_{0,max}$					68.0	88.0	156.0	219.0
					M_{max}					107.7	135.9	205.0	250.1
					n_{eto}					-	-	-	-

► I... [A], M... [Nm], n... [r/min], P... [kW]



Selection tables, Servo Inverter 9300

Forced ventilated IP54 motors

► The data applies to a mains connection voltage of 3 x 400 V and an inverter switching frequency of 8 kHz.

					EVS	9326-E□	9327-E□	9328-E□	9329-E□	9330-E□	9331-E□	9332-E□
					I_N	23.5	32.0	47.0	59.0	89.0	110.0	145.0
					$I_{0,max}$	23.5	32.0	47.0	52.0	80.0	110.0	126.0
MCA	M_N	n_N	I_N	P_N	I_{max}	35.3	48.0	70.5	88.5	133.5	165.0	217.5
22P08-...5F□□	110.0	760	22.1	8.80	M_0	115.0	120.0	120.0	120.0			
					M_N	108.0	110.0	110.0	110.0			
					$M_{0,max}$	115.0	166.0	242.0	267.0			
					M_{max}	185.0	247.0	338.8	345.8			
					n_{eto}	-	-	-	-			
22P14-...5F□□	107.0	1425	37.7	16.00	M_0			120.0	120.0	120.0		
					M_N			107.0	107.0	107.0		
					$M_{0,max}$			146.0	160.0	264.0		
					M_{max}			230.1	292.9	341.8		
					n_{eto}			-	-	-		
22P17-...5F□□	105.0	1670	42.7	18.50	M_0			120.0	120.0	120.0	120.0	
					M_N			106.0	106.0	106.0	106.0	
					$M_{0,max}$			124.0	140.0	240.0	335.0	
					M_{max}			180.5	227.7	342.1	378.3	
					n_{eto}			-	-	-	-	
22P29-...5F□□	100.0	2935	72.1	30.70	M_0					118.0	120.0	120.0
					M_N					100.0	100.0	100.0
					$M_{0,max}$					122.0	171.0	200.0
					M_{max}					215.6	273.1	355.1
					n_{eto}					-	-	-
26T05-...5F□□	216.0	550	34.9	12.40	M_0		191.0	220.0	220.0	220.0		
					M_N		191.0	216.0	216.0	216.0		
					$M_{0,max}$		191.0	303.0	333.0	615.0		
					M_{max}		313.0	482.0	612.0	751.0		
					n_{eto}		-	-	-	-		
26T10-...5F□□	210.0	1030	61.5	22.70	M_0				159.0	220.0	220.0	
					M_N				197.0	210.0	210.0	
					$M_{0,max}$				159.0	300.0	440.0	
					M_{max}				343.0	552.0	671.0	
					n_{eto}				-	-	-	
26T12-...5F□□	207.0	1200	75.1	26.00	M_0					207.0	220.0	220.0
					M_N					255.0	207.0	207.0
					$M_{0,max}$					258.0	327.0	397.0
					M_{max}					424.0	512.0	663.0
					n_{eto}					-	-	-
26T22-...5F□□	195.0	2235	112.9	45.60	M_0						177.0	220.0
					M_N						177.0	195.0
					$M_{0,max}$						203.0	220.0
					M_{max}						315.0	432.0
					n_{eto}						-	-

► I... [A], M... [Nm], n... [r/min], P... [kW]
► If the motors are operated at a lower switching frequency, please contact your Lenze sales office!



Selection tables, Servo Inverter 9300

Forced ventilated IP23s motors

► The data applies to a mains connection voltage of 3 x 400 V and an inverter switching frequency of 8 kHz.

					EVS	9326-E□	9327-E□	9328-E□	9329-E□	9330-E□	9331-E□	9332-E□
					I_N	23.5	32.0	47.0	59.0	89.0	110.0	145.0
					$I_{0,max}$	23.5	32.0	47.0	52.0	80.0	110.0	126.0
MCA	M_N	n_N	I_N	P_N	I_{max}	35.3	48.0	70.5	88.5	133.5	165.0	217.5
20X14-...2F□□	61.0	1420	23.0	9.10	M_0	61.0	68.0	68.0				
					M_N	61.0	61.0	61.0				
					$M_{0,max}$	61.0	93.0	153.0				
					M_{max}	109.3	156.7	232.1				
					n_{eto}	-	-	-				
20X29-...2F□□	53.5	2930	42.4	16.40	M_0		28.0	66.3	68.0	68.0		
					M_N		28.0	53.5	53.5	53.5		
					$M_{0,max}$		28.0	66.3	72.0	129.0		
					M_{max}		68.5	112.5	146.4	226.7		
					n_{eto}		-	-	-	-		
22P08-...2F□□	120.0	760	23.5	9.60	M_0	115.0	135.0	135.0	135.0			
					M_N	115.0	120.0	120.0	120.0			
					$M_{0,max}$	115.0	166.0	242.0	267.0			
					M_{max}	185.0	247.0	338.8	345.8			
					n_{eto}	-	-	-	-			
22P14-...2F□□	115.0	1425	40.0	17.20	M_0			135.0	135.0	135.0		
					M_N			115.0	115.0	115.0		
					$M_{0,max}$			146.0	160.0	264.0		
					M_{max}			230.1	292.9	341.8		
					n_{eto}			-	-	-		
22P17-...2F□□	112.0	1670	44.5	19.60	M_0			124.0	134.0	135.0	135.0	
					M_N			112.0	112.0	112.0	112.0	
					$M_{0,max}$			124.0	140.0	240.0	335.0	
					M_{max}			180.5	227.7	342.1	378.3	
					n_{eto}			-	-	-	-	
22P29-...2F□□	110.0	2935	77.8	33.80	M_0					118.0	135.0	135.0
					M_N					110.0	110.0	110.0
					$M_{0,max}$					122.0	171.0	200.0
					M_{max}					215.6	273.1	355.1
					n_{eto}					-	-	-
26T05-...2F□□	280.0	550	42.4	16.10	M_0		191.0	290.0	290.0	290.0		
					M_N		191.0	280.0	280.0	280.0		
					$M_{0,max}$		191.0	303.0	333.0	615.0		
					M_{max}		313.0	482.0	612.0	751.0		
					n_{eto}		-	-	-	-		
26T10-...2F□□	260.0	1030	69.6	28.00	M_0				159.0	290.0	290.0	
					M_N				197.0	260.0	260.0	
					$M_{0,max}$				159.0	300.0	440.0	
					M_{max}				343.0	552.0	671.0	
					n_{eto}				-	-	-	

► I... [A], M... [Nm], n... [r/min], P... [kW]
► If the motors are operated at a lower switching frequency, please contact your Lenze sales office!



Selection tables, Servo Inverter 9300

Forced ventilated IP23s motors

► The data applies to a mains connection voltage of 3 x 400 V and an inverter switching frequency of 8 kHz.

					EVS	9326-E□	9327-E□	9328-E□	9329-E□	9330-E□	9331-E□	9332-E□
					I_N	23.5	32.0	47.0	59.0	89.0	110.0	145.0
					$I_{0,max}$	23.5	32.0	47.0	52.0	80.0	110.0	126.0
MCA	**M_N**	**n_N**	**I_N**	**P_N**	I_{max}	35.3	48.0	70.5	88.5	133.5	165.0	217.5
26T12-...2F□□	255.0	1200	83.3	32.00	M_0					232.0	290.0	290.0
					M_N					255.0	255.0	255.0
					$M_{0,max}$					258.0	327.0	397.0
					M_{max}					424.0	512.0	663.0
					n_{eto}					-	-	-
26T22-...2F□□	230.0	2235	126.7	53.80	M_0						177.0	222.0
					M_N						177.0	230.0
					$M_{0,max}$						203.0	220.0
					M_{max}						315.0	432.0
					n_{eto}						-	-

► I... [A], M... [Nm], n... [r/min], P... [kW]
► If the motors are operated at a lower switching frequency, please contact your Lenze sales office!



Torque characteristics

- The data applies to a mains connection voltage of 3 x 400 V.
- You can find further torque characteristics at **www.lenze.de/dsc**.

MCA10I40 (non-ventilated)

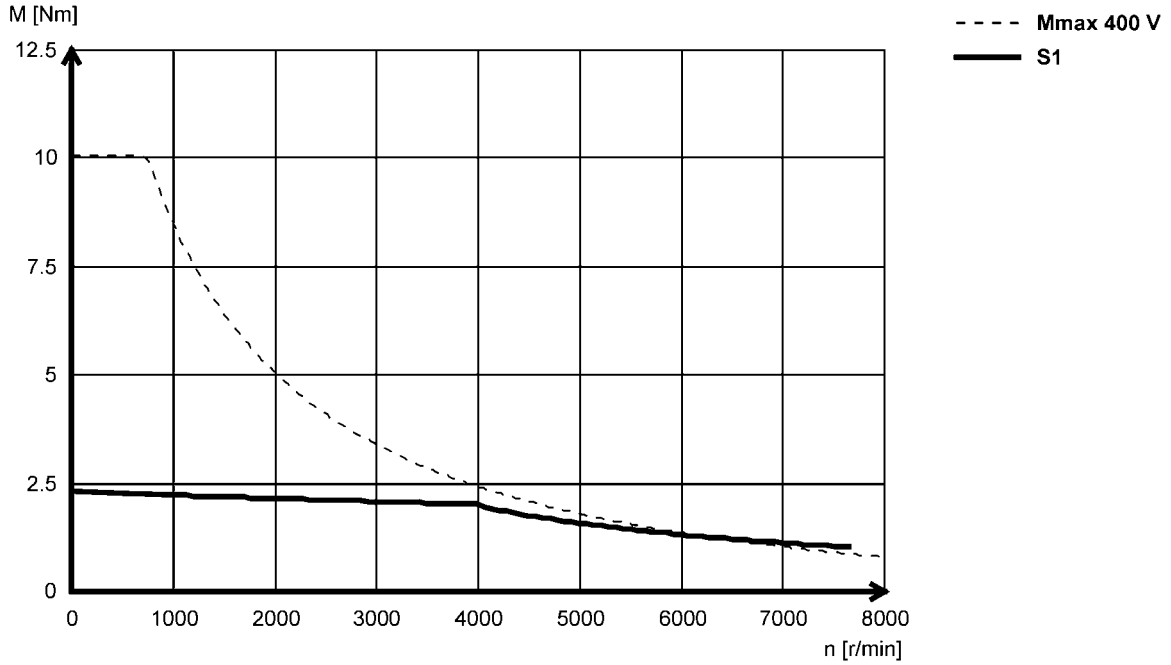



Torque characteristics

- The data applies to a mains connection voltage of 3 x 400 V.
- You can find further torque characteristics at **www.lenze.de/dsc**.

MCA13I34 (forced ventilated)

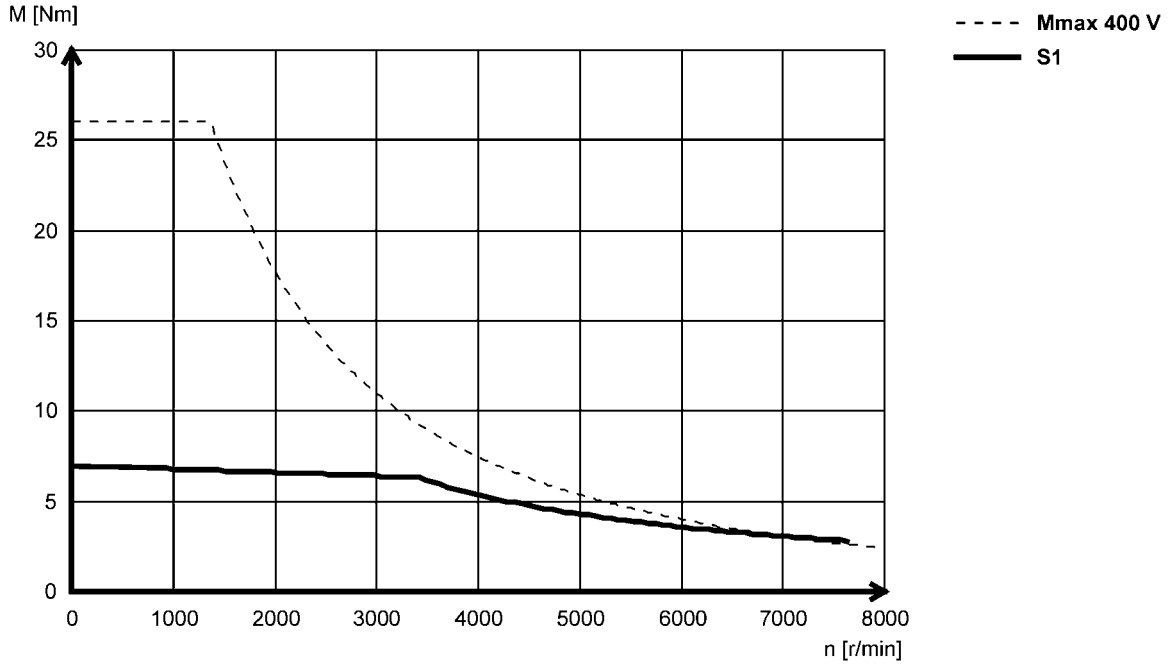

MCA13I41 (non-ventilated)

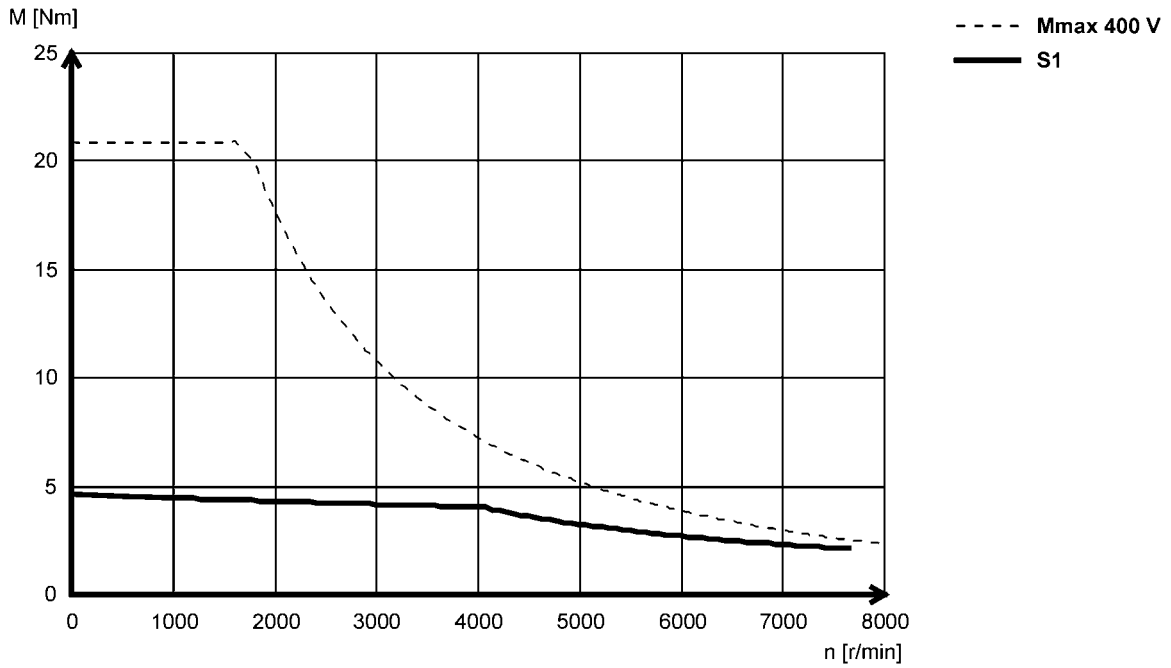



Torque characteristics

- The data applies to a mains connection voltage of 3 x 400 V.
- You can find further torque characteristics at **www.lenze.de/dsc**.

MCA14L16 (forced ventilated)

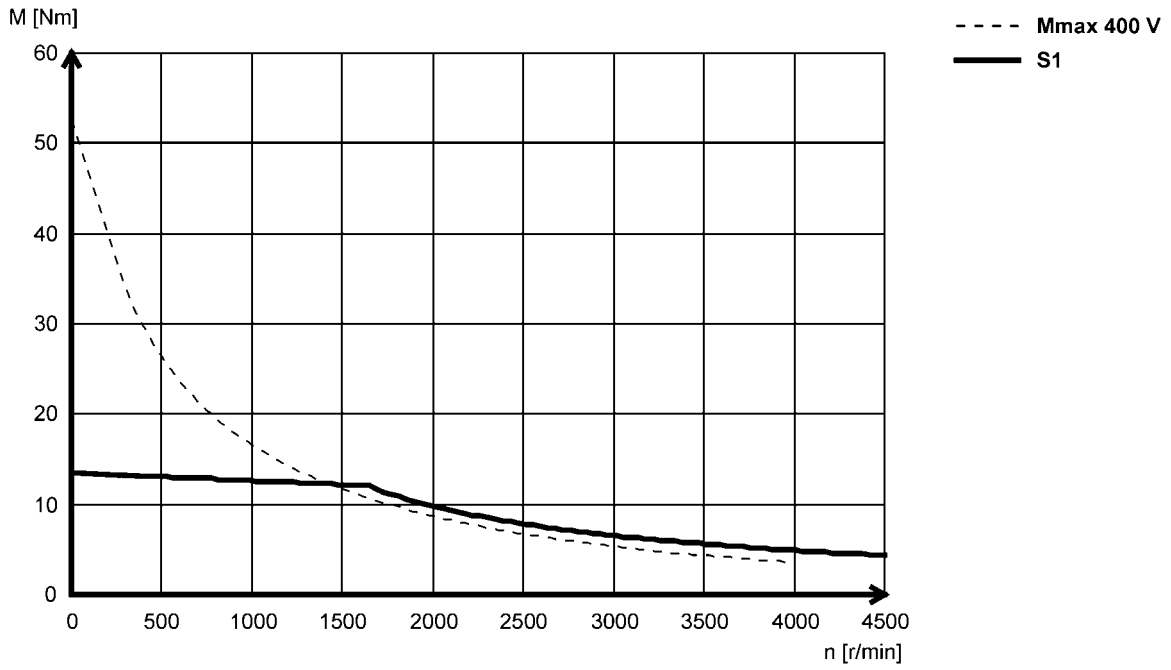

MCA14L20 (non-ventilated)

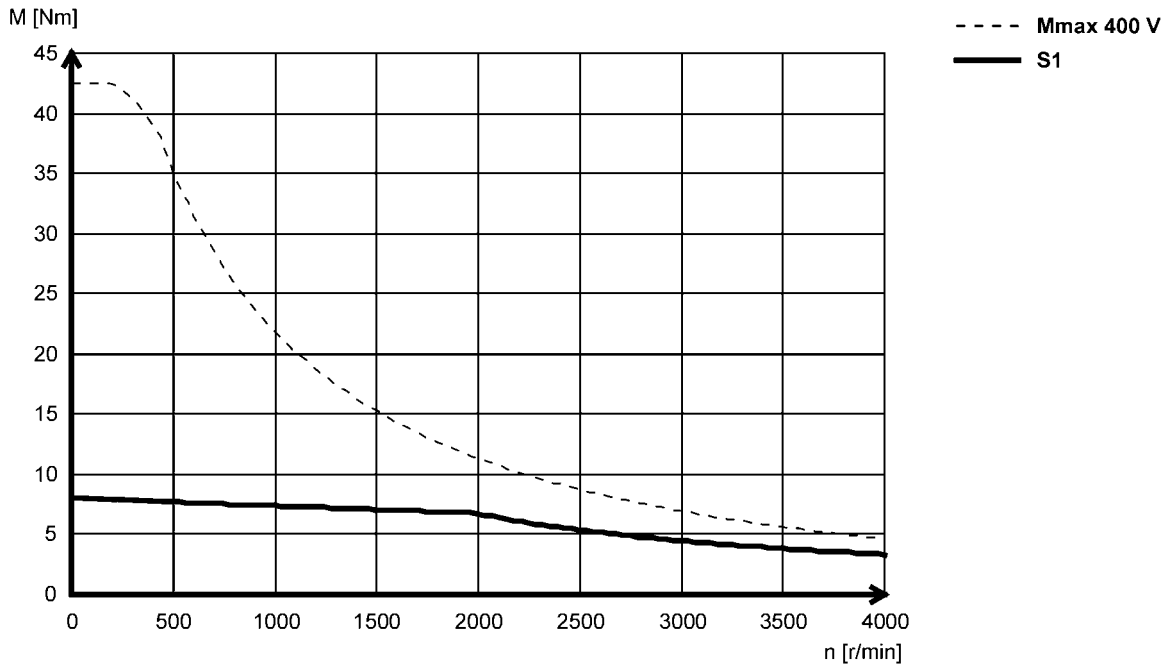



Torque characteristics

- The data applies to a mains connection voltage of 3 x 400 V.
- You can find further torque characteristics at **www.lenze.de/dsc**.

MCA14L35 (forced ventilated)

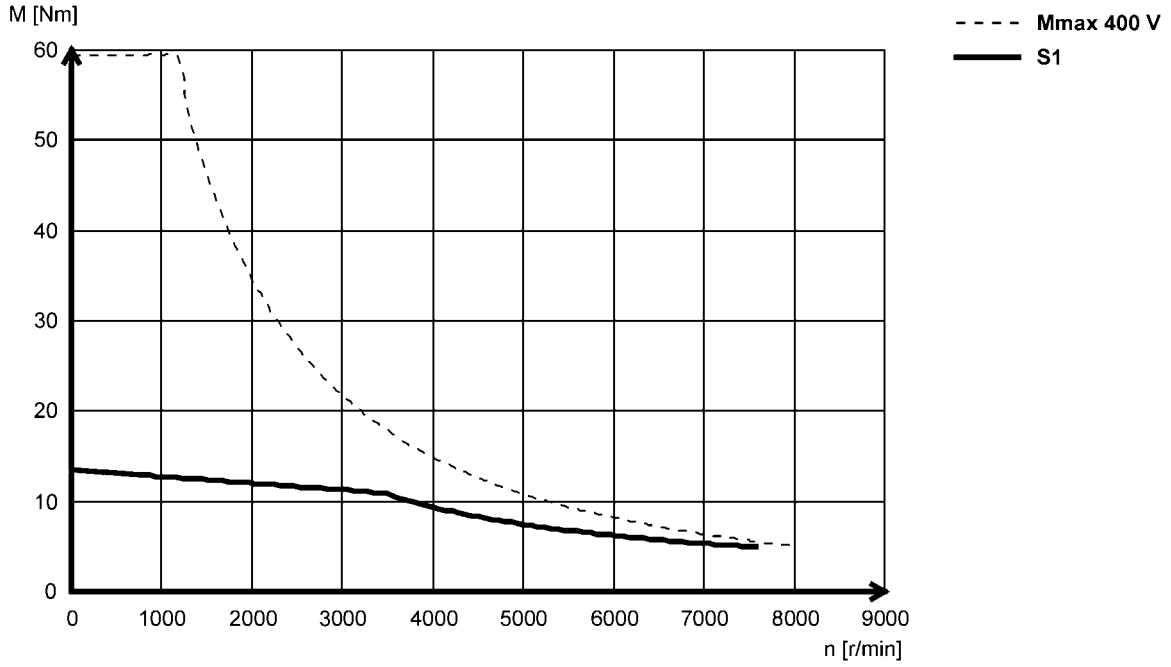

MCA14L41 (non-ventilated)

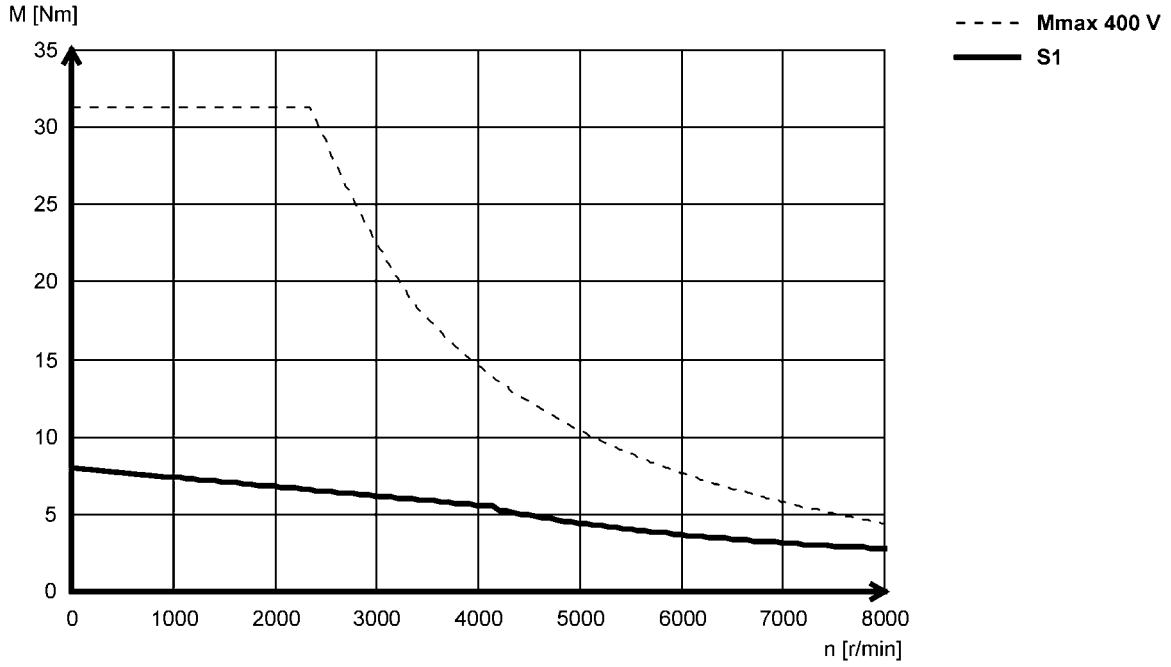



Torque characteristics

- The data applies to a mains connection voltage of 3 x 400 V.
- You can find further torque characteristics at **www.lenze.de/dsc**.

MCA17N17 (forced ventilated)

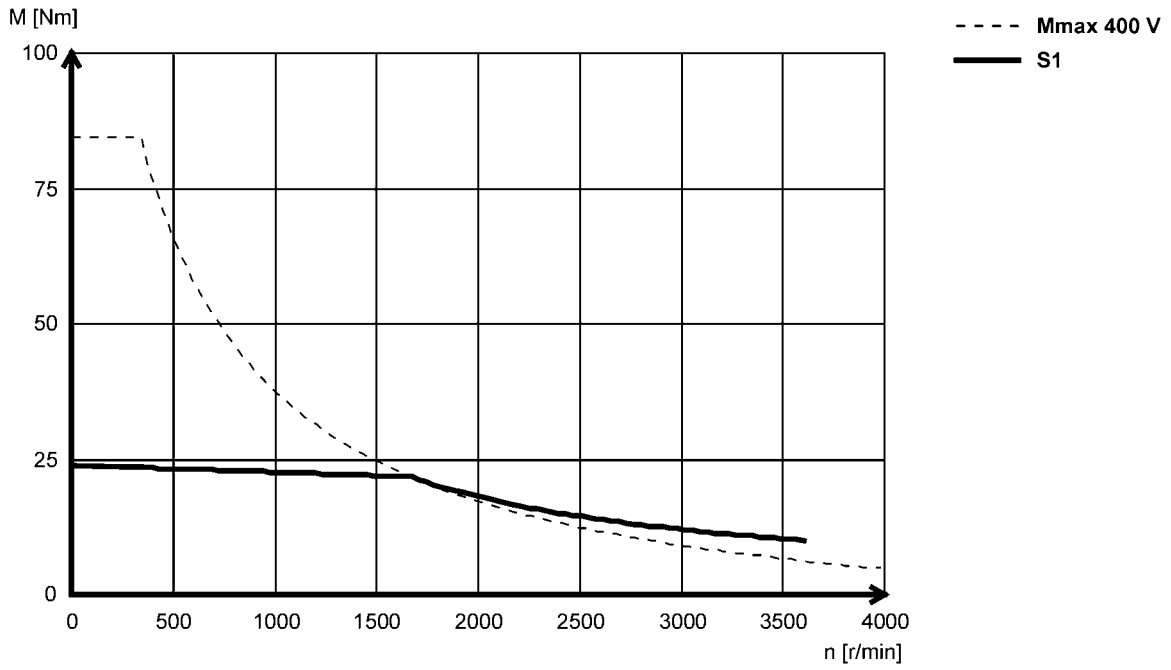

MCA17N23 (non-ventilated)

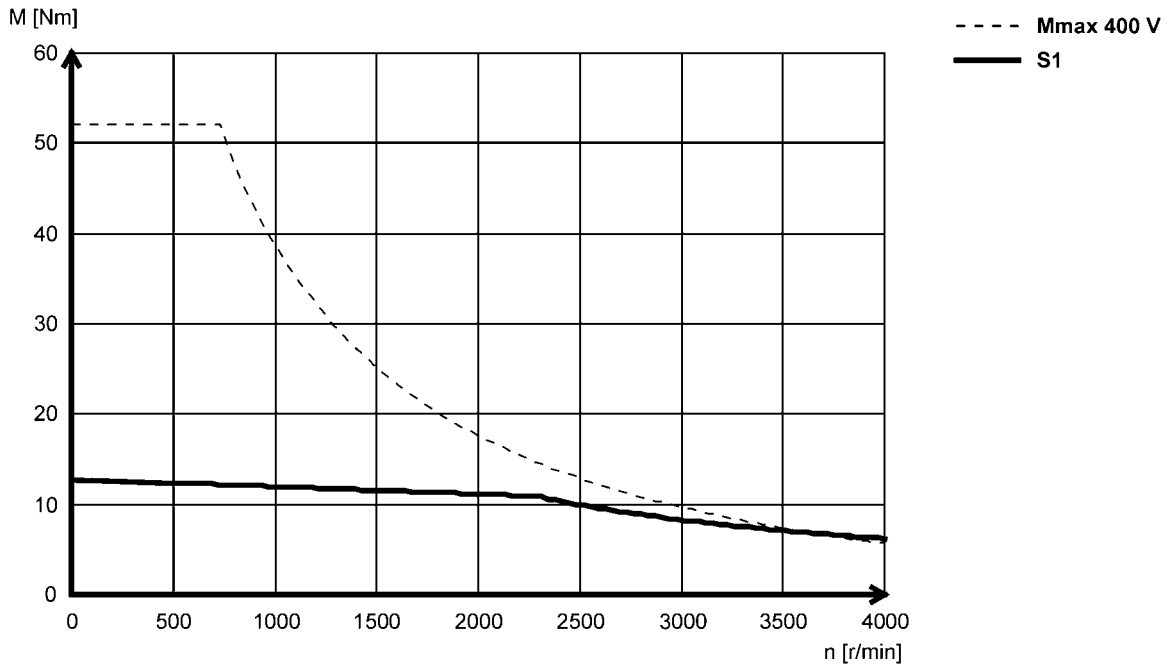



Torque characteristics

- The data applies to a mains connection voltage of 3 x 400 V.
- You can find further torque characteristics at **www.lenze.de/dsc**.

MCA17N35 (forced ventilated)

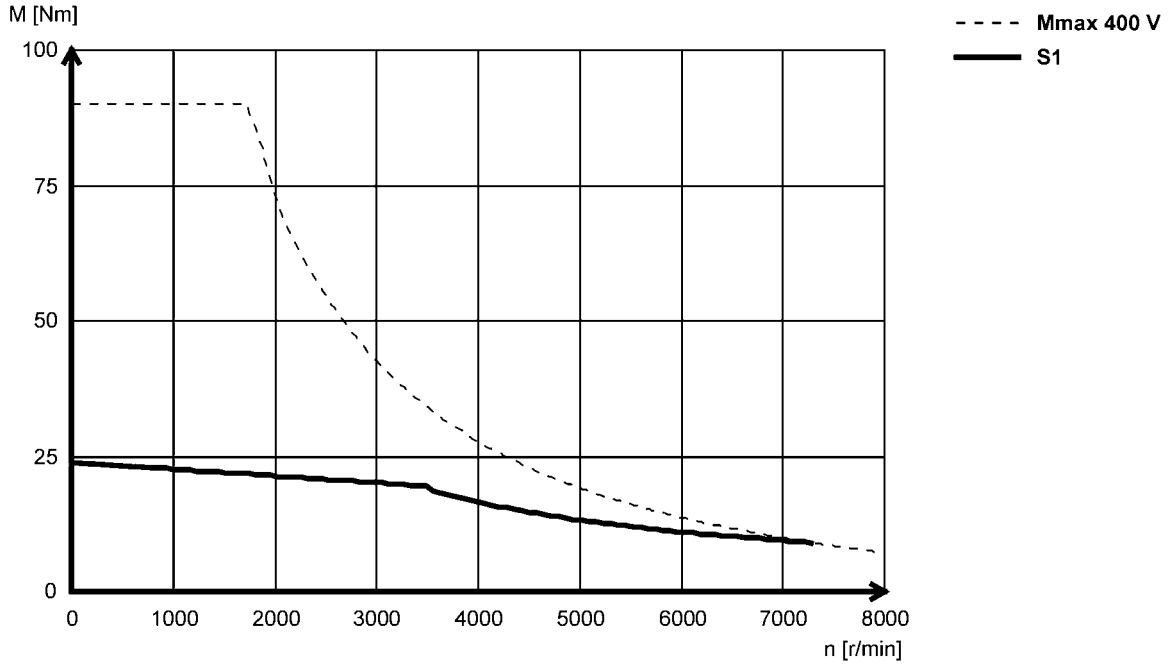

MCA17N41 (non-ventilated)

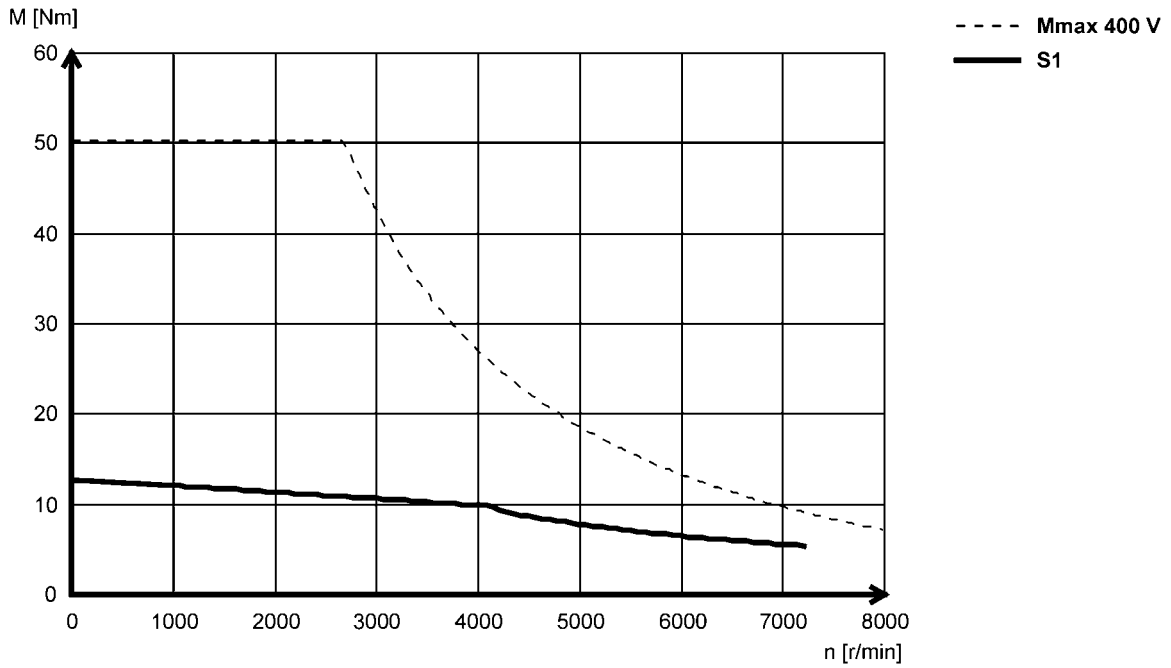



Torque characteristics

- The data applies to a mains connection voltage of 3 x 400 V.
- You can find further torque characteristics at **www.lenze.de/dsc**.

MCA19S17 (forced ventilated)

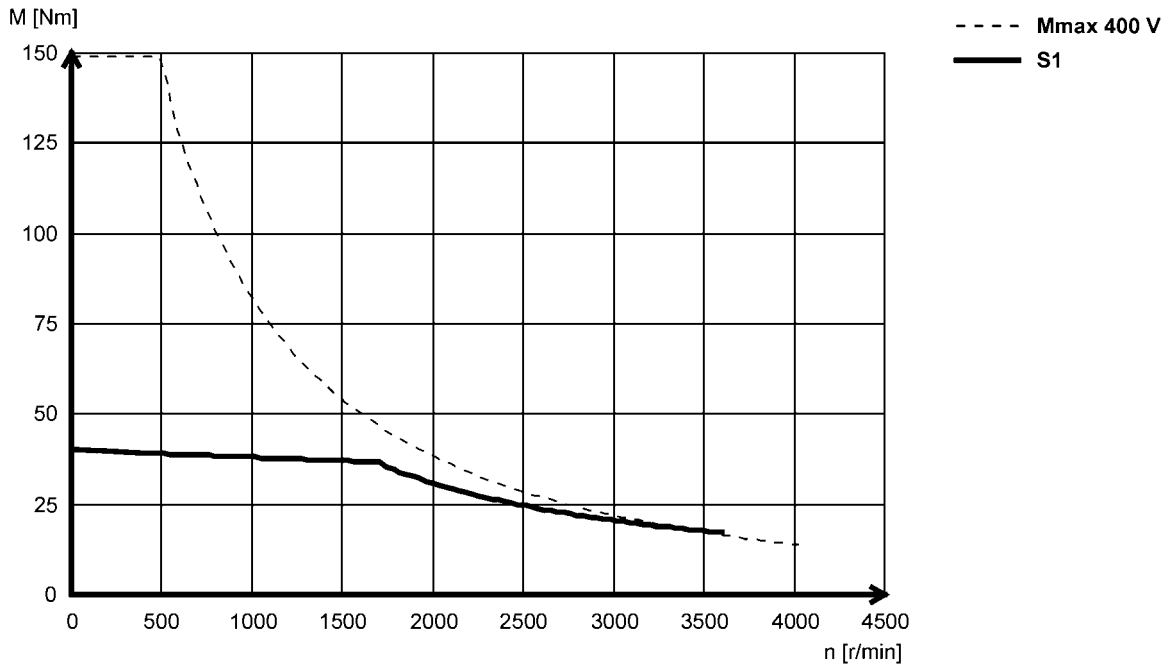

MCA19S23 (non-ventilated)

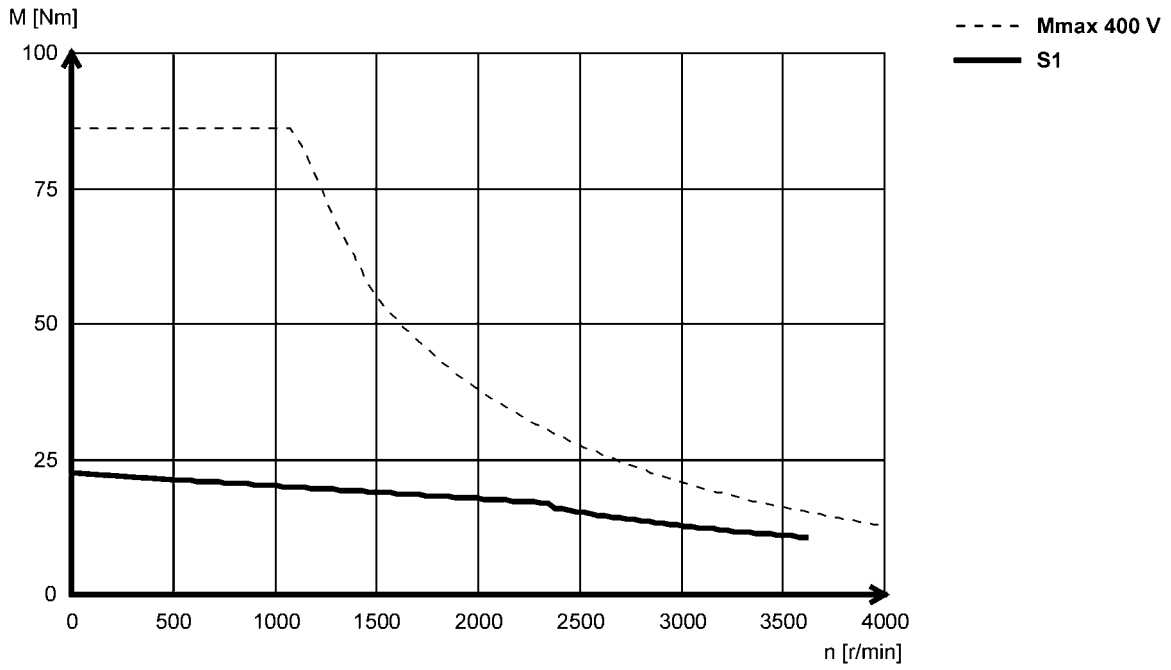



Torque characteristics

- The data applies to a mains connection voltage of 3 x 400 V.
- You can find further torque characteristics at **www.lenze.de/dsc**.

MCA19S35 (forced ventilated)

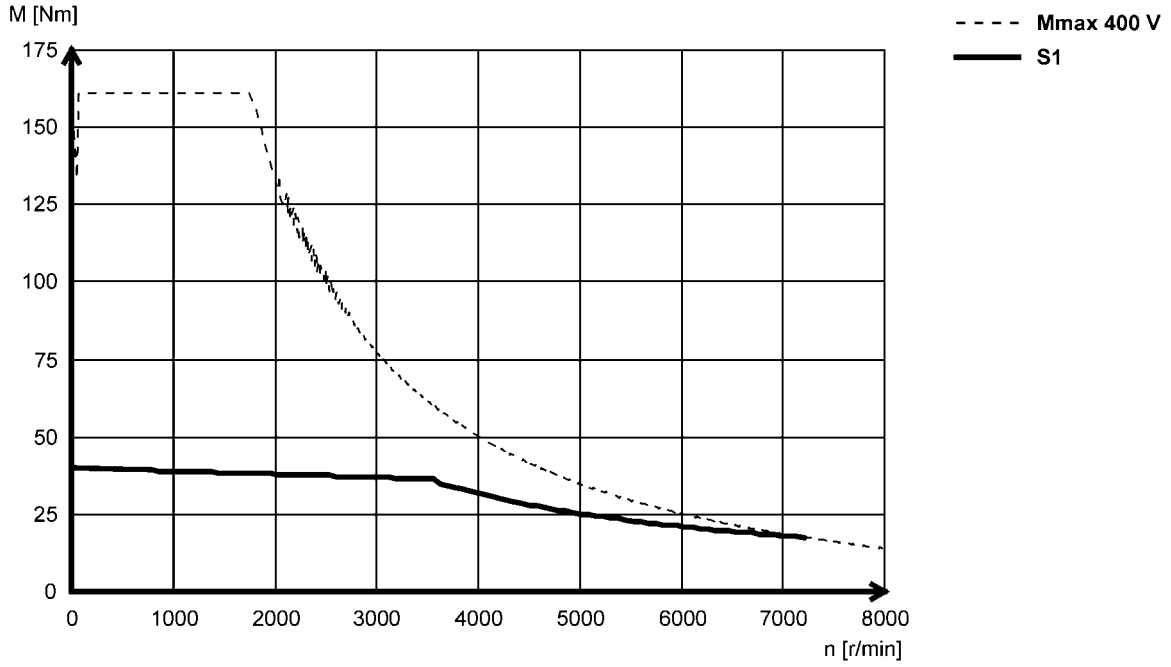

MCA19S42 (non-ventilated)

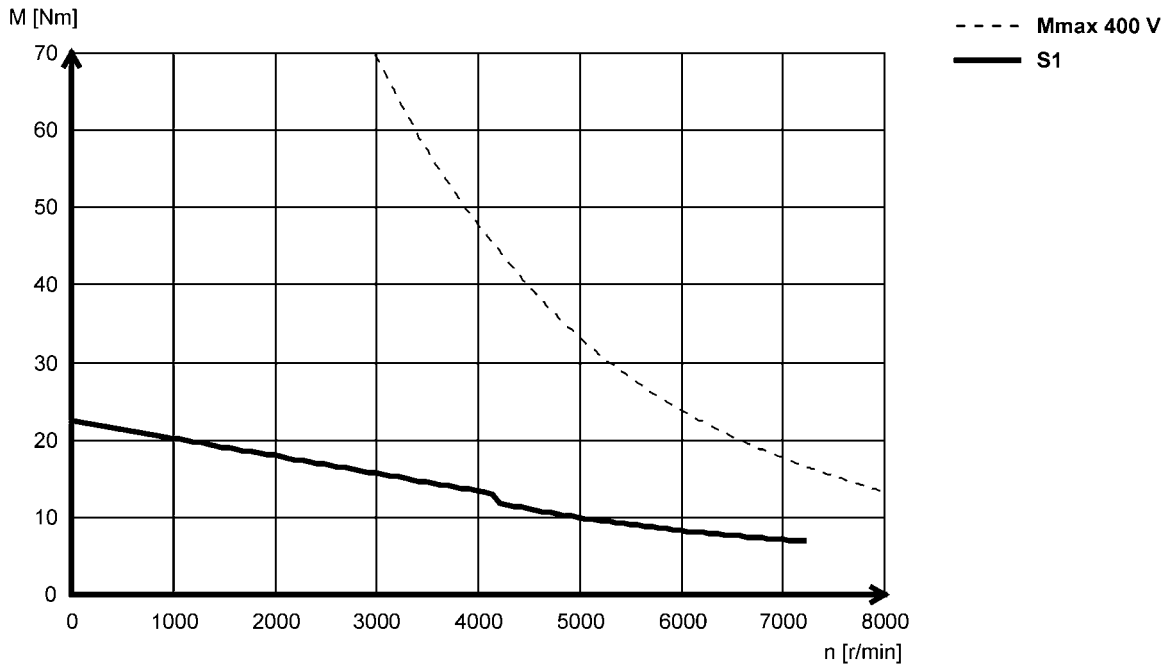



Torque characteristics

- The data applies to a mains connection voltage of 3 x 400 V.
- You can find further torque characteristics at **www.lenze.de/dsc**.

MCA20X14...2F□□ (forced ventilated)

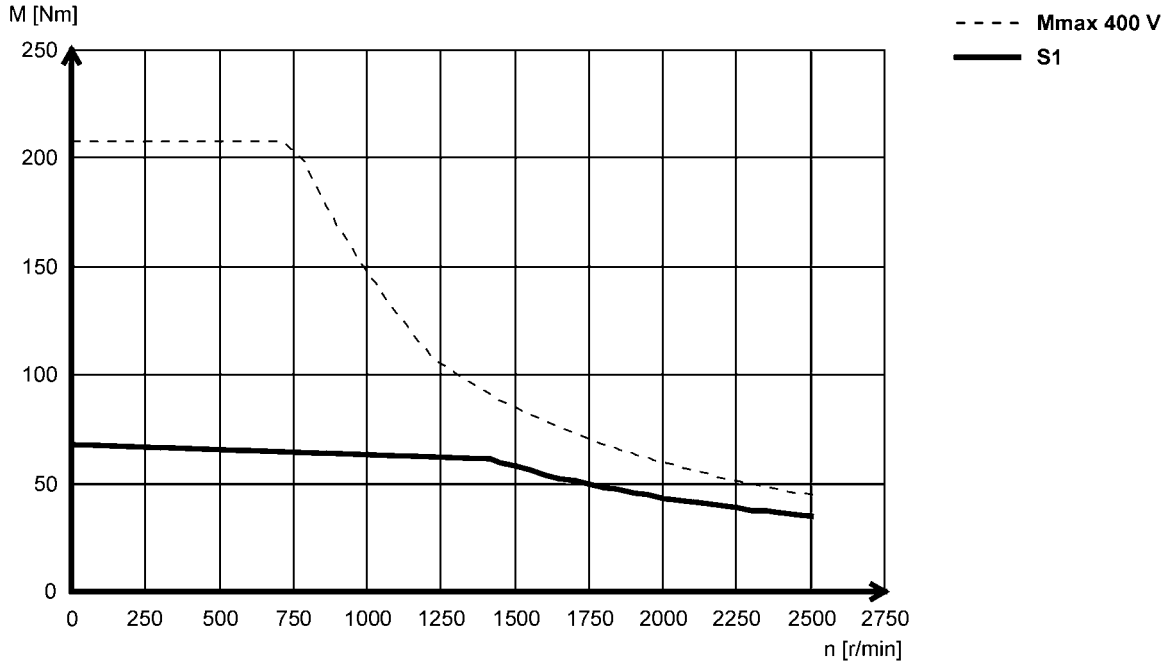

MCA20X29...2F□□ (forced ventilated)

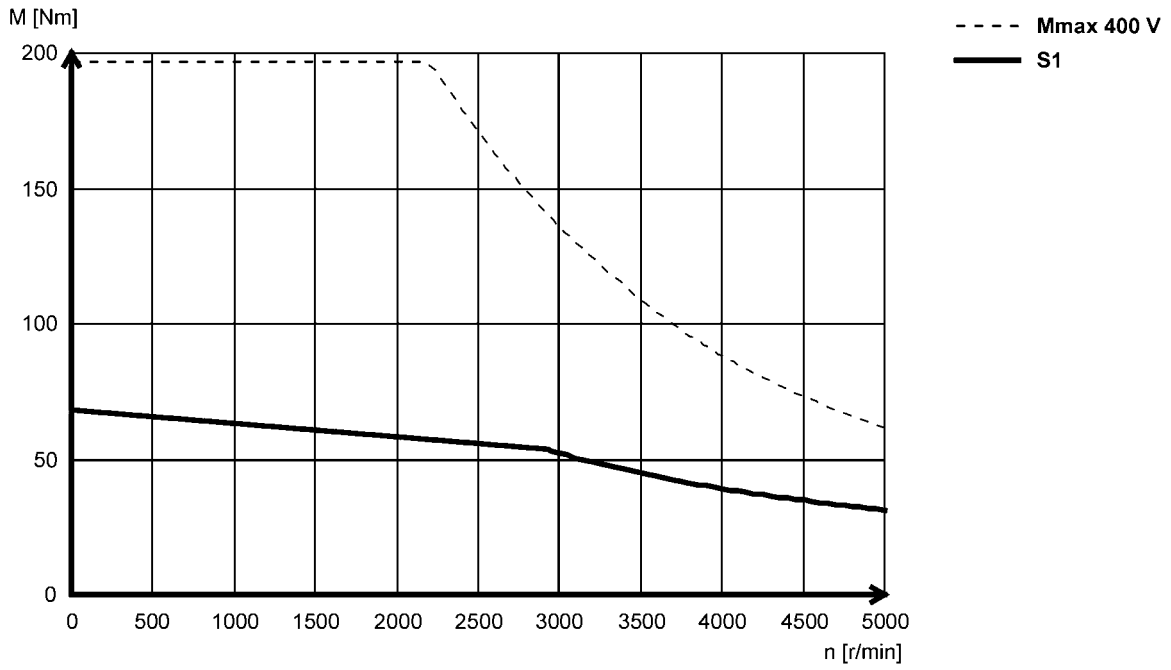



Torque characteristics

- The data applies to a mains connection voltage of 3 x 400 V.
- You can find further torque characteristics at **www.lenze.de/dsc**.

MCA21X17 (forced ventilated)

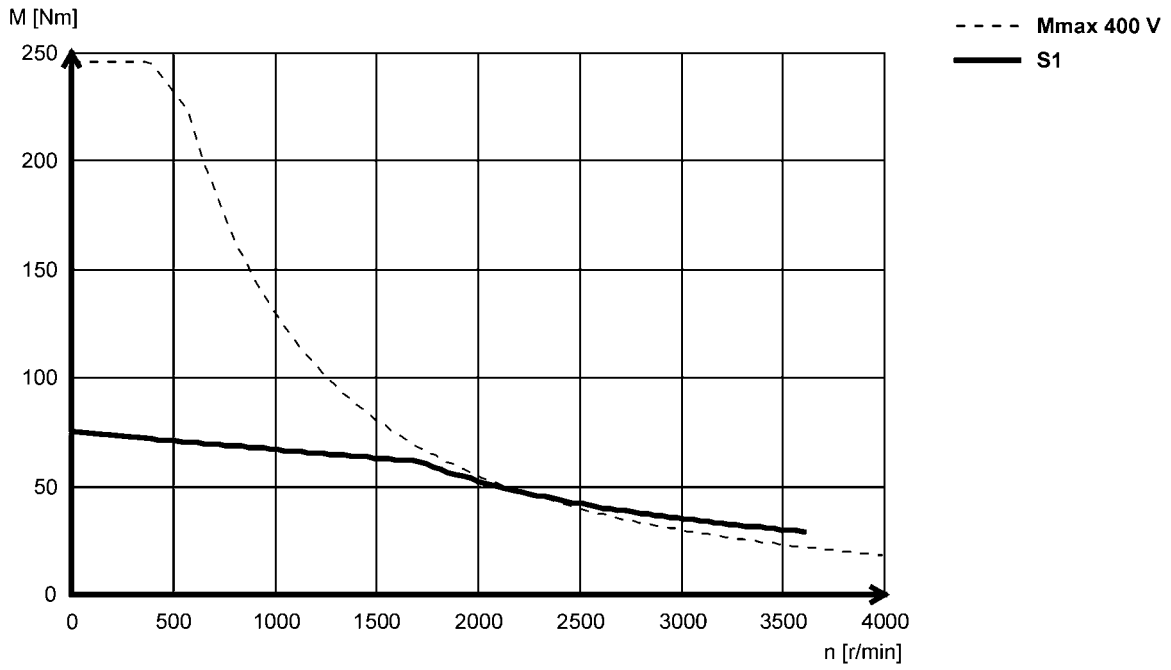

MCA21X25 (non-ventilated)

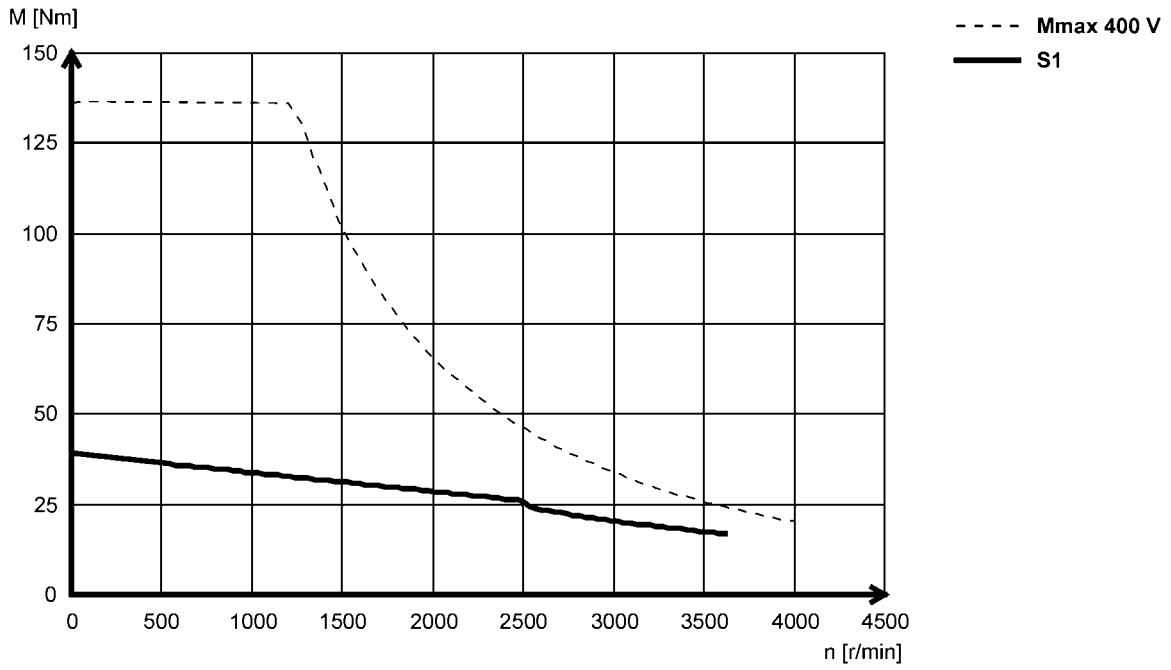



Torque characteristics

- The data applies to a mains connection voltage of 3 x 400 V.
- You can find further torque characteristics at **www.lenze.de/dsc**.

MCA21X35 (forced ventilated)

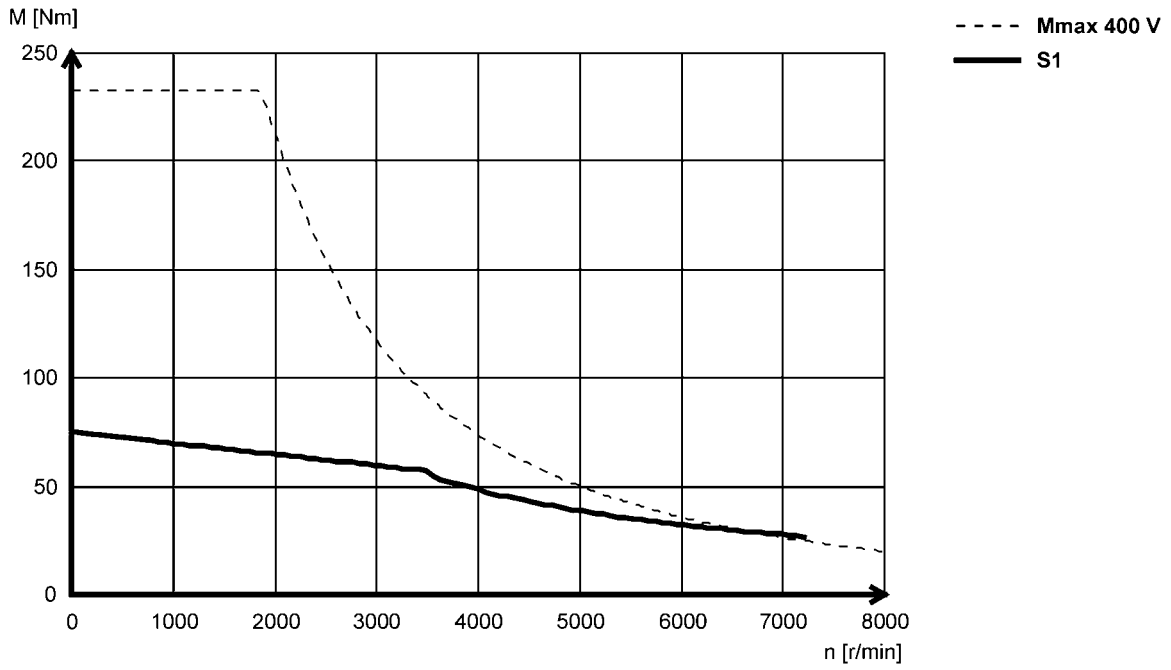

MCA21X42 (non-ventilated)

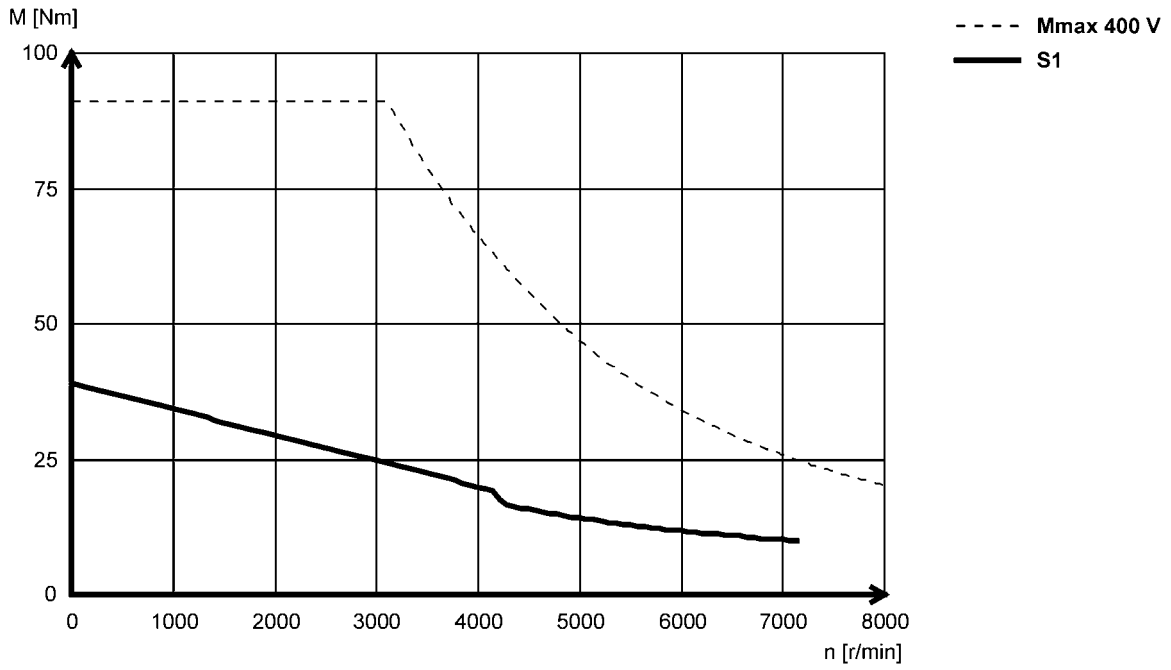



Torque characteristics

- The data applies to a mains connection voltage of 3 x 400 V.
- You can find further torque characteristics at **www.lenze.de/dsc**.

MCA22P08...5F□□ (forced ventilated)

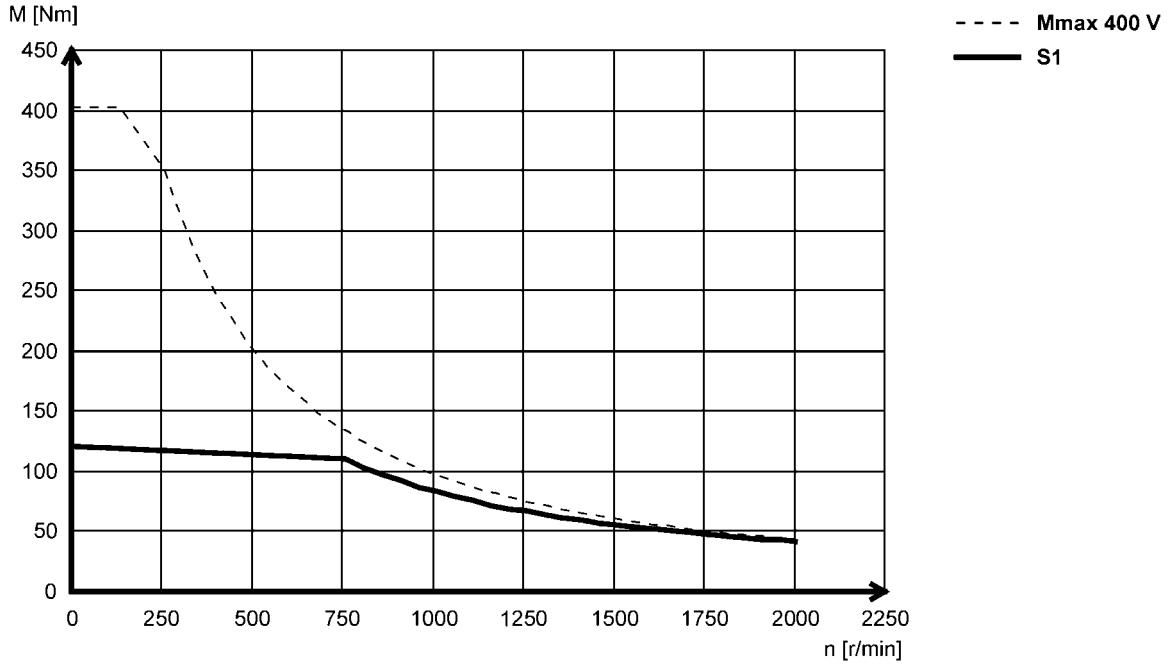

MCA22P08...2F□□ (forced ventilated)

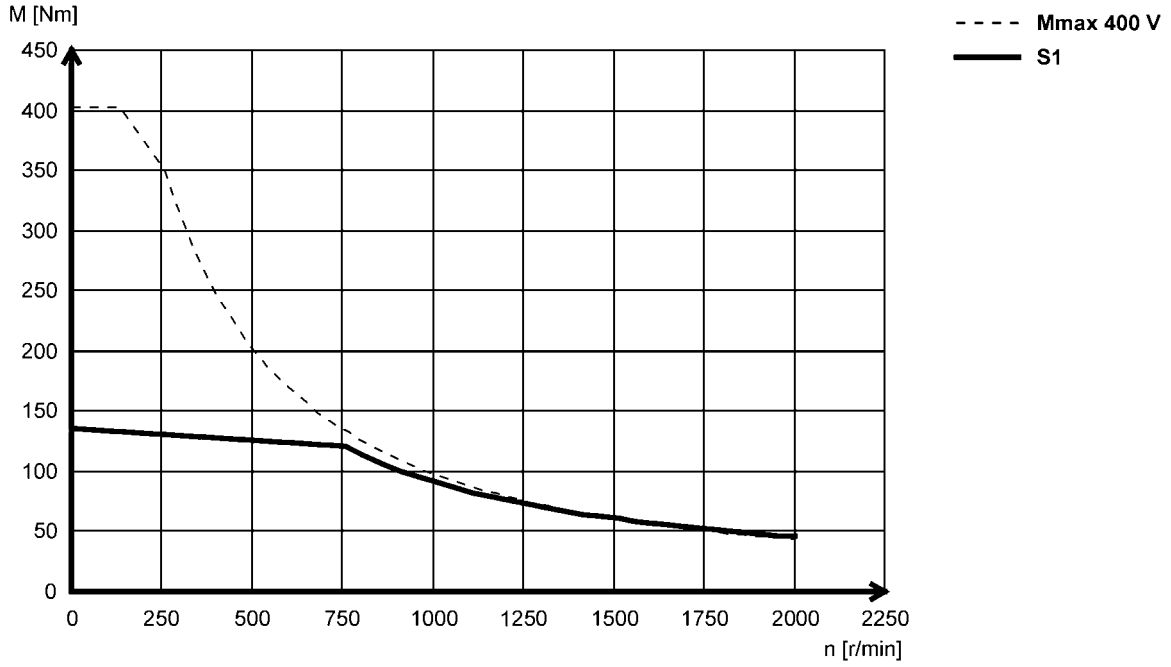



Torque characteristics

- The data applies to a mains connection voltage of 3 x 400 V.
- You can find further torque characteristics at **www.lenze.de/dsc**.

MCA22P14...5F□□ (forced ventilated)

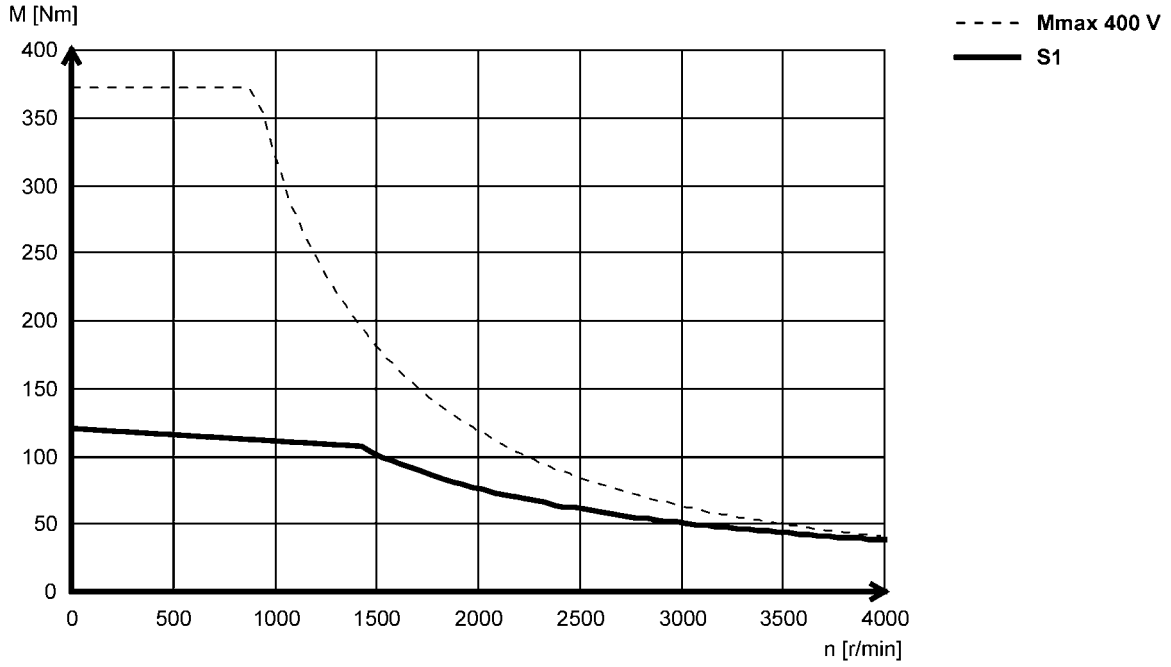

MCA22P14...2F□□ (forced ventilated)

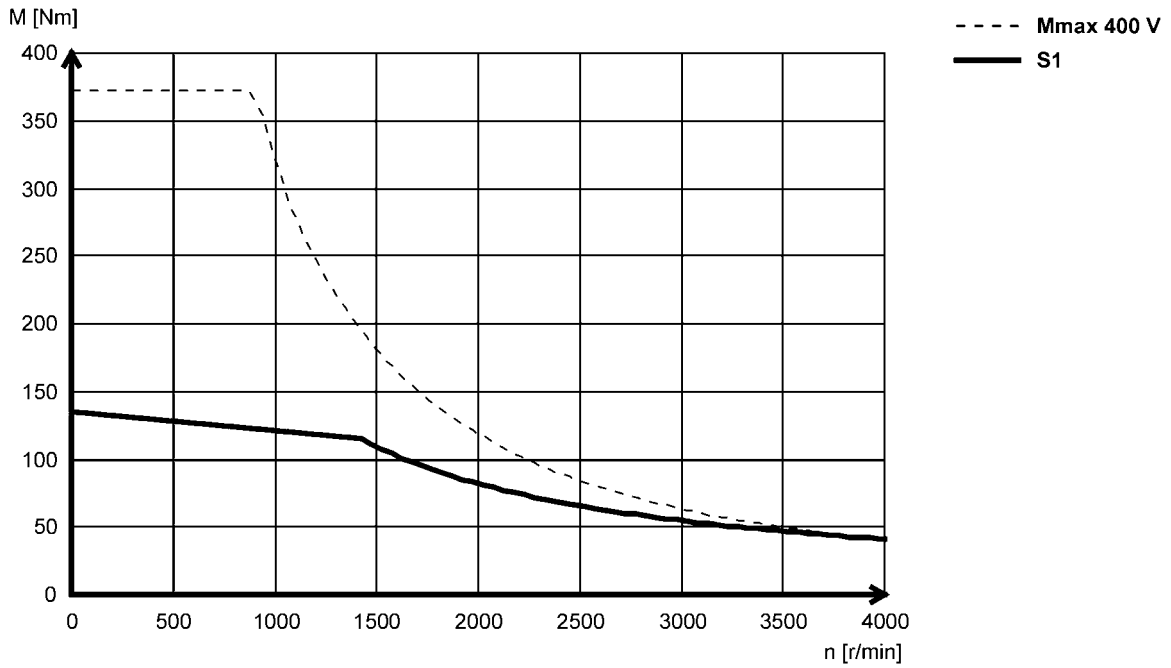



Torque characteristics

- ► The data applies to a mains connection voltage of 3 x 400 V.
- ► You can find further torque characteristics at **www.lenze.de/dsc**.

MCA22P17...5F□□ (forced ventilated)

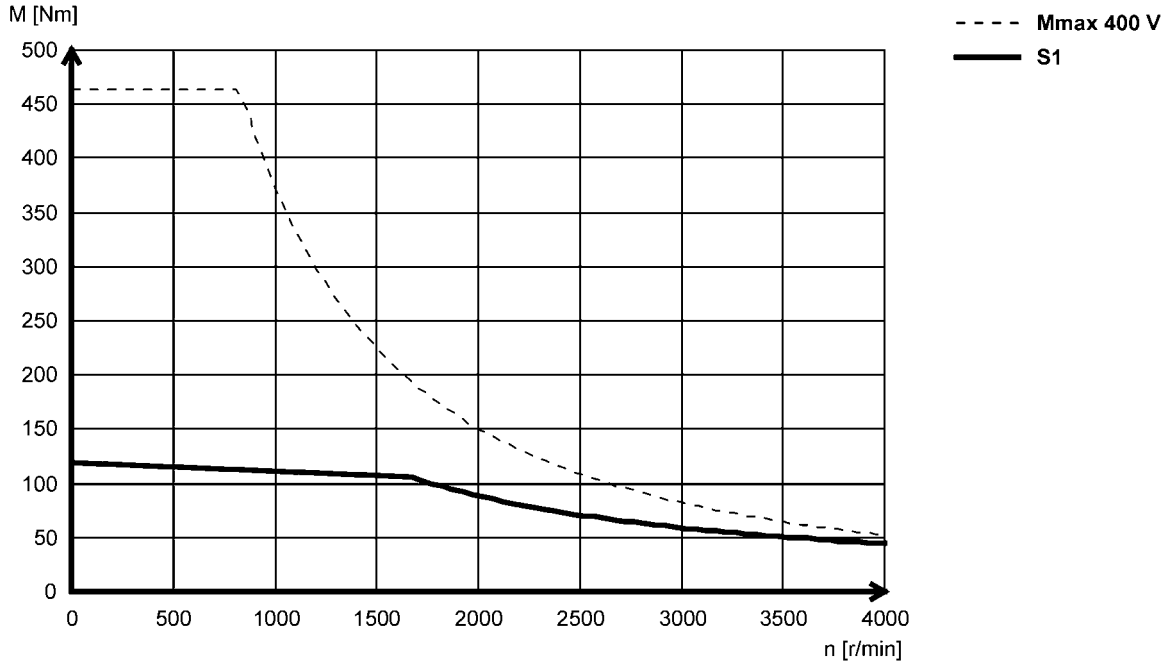

MCA22P17...2F□□ (forced ventilated)

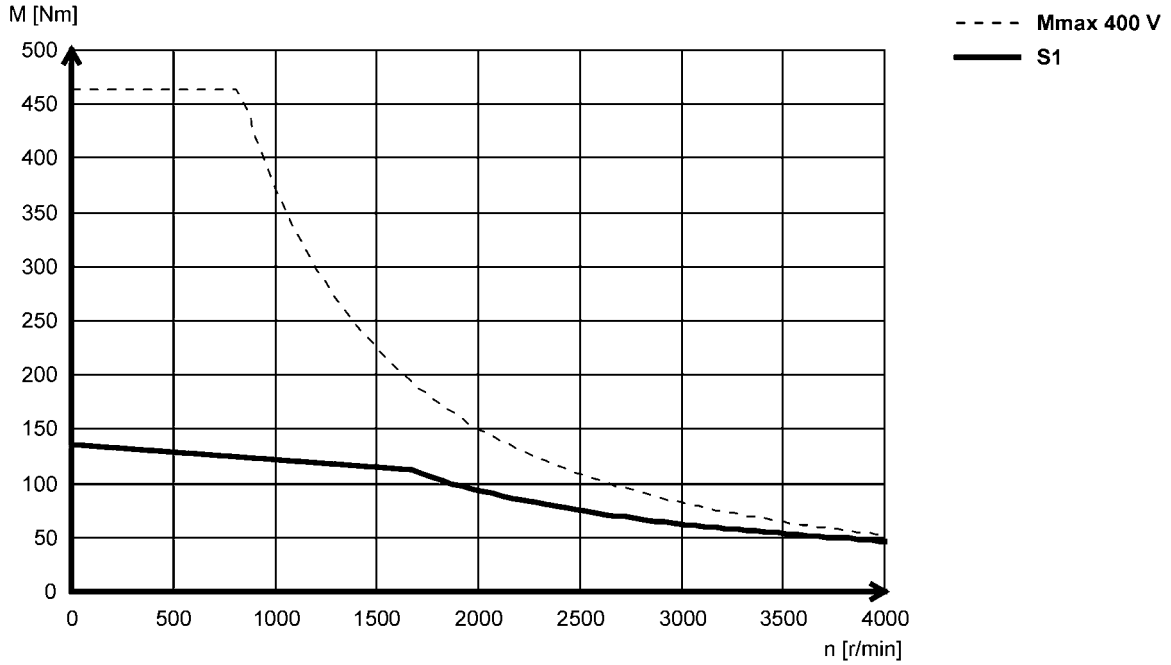



Torque characteristics

- The data applies to a mains connection voltage of 3 x 400 V.
- You can find further torque characteristics at **www.lenze.de/dsc**.

MCA22P29...5F□□ (forced ventilated)

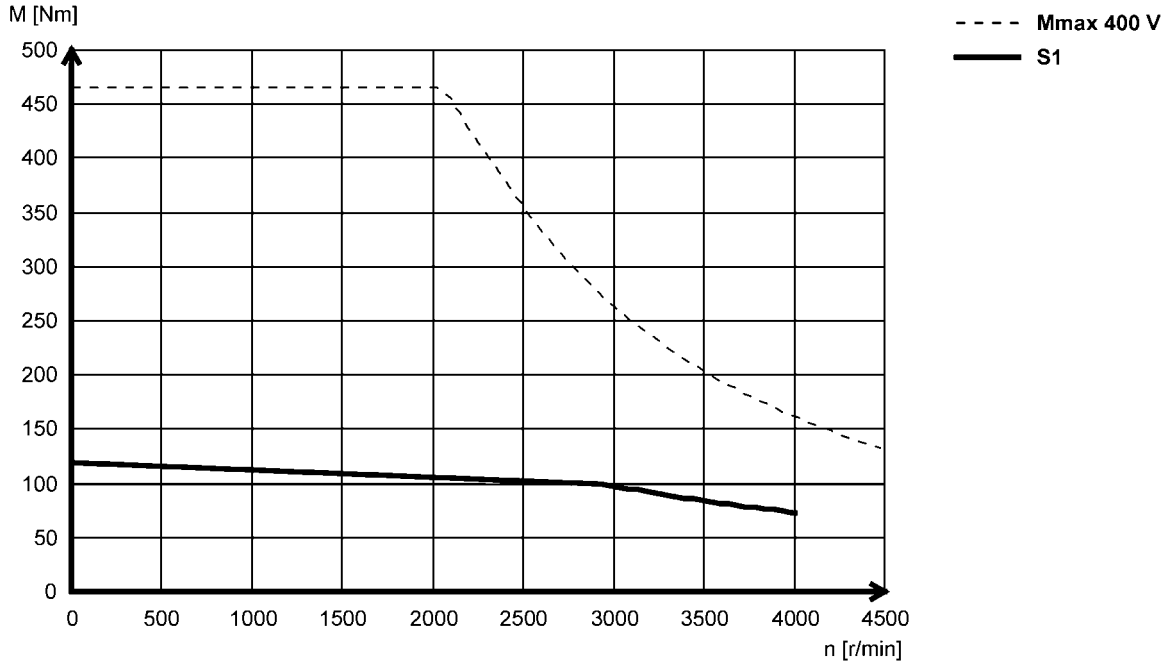

MCA22P29...2F□□ (forced ventilated)

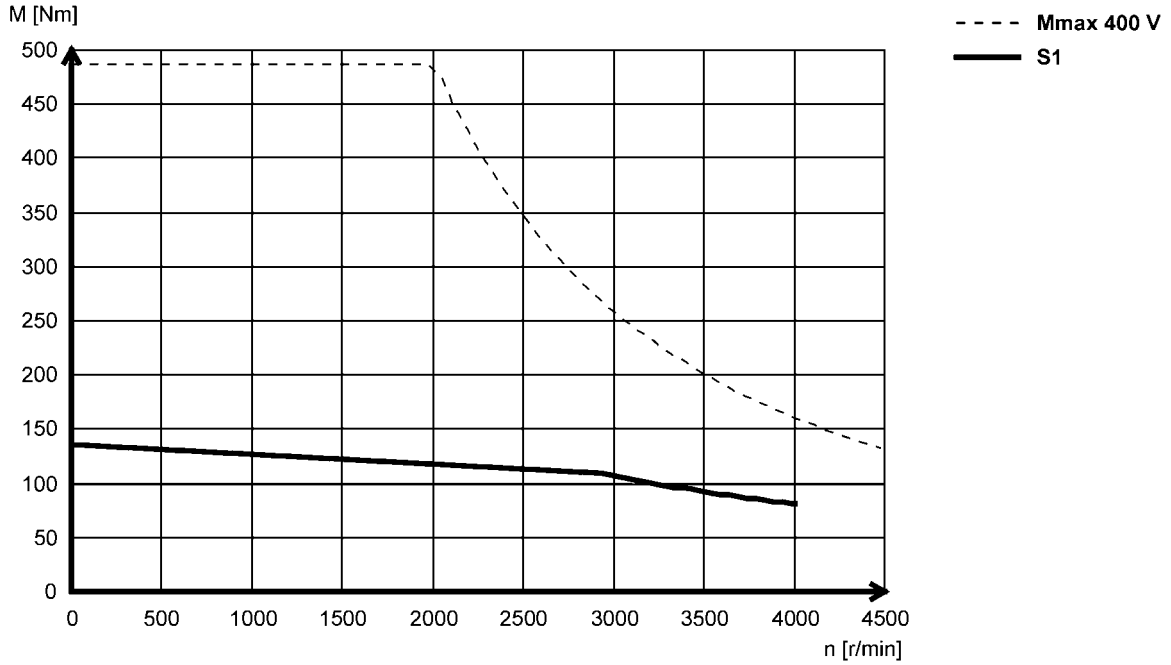



Torque characteristics

- The data applies to a mains connection voltage of 3 x 400 V.
- You can find further torque characteristics at **www.lenze.de/dsc**.

MCA26T05...5F□□ (forced ventilated)

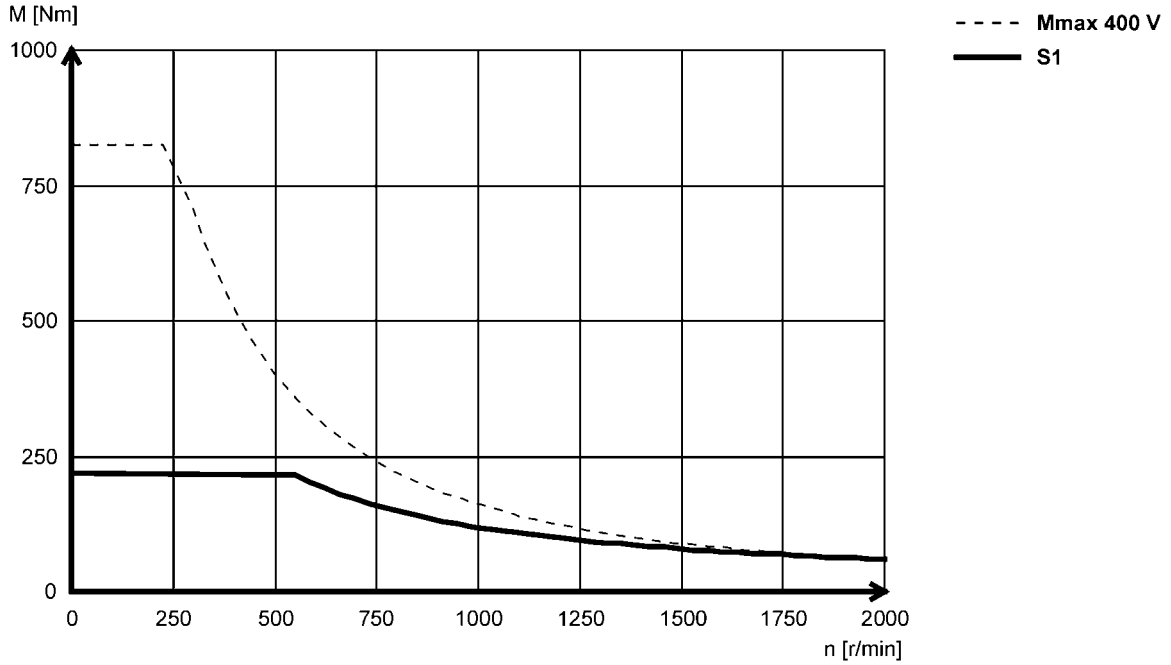

MCA26T05...2F□□ (forced ventilated)

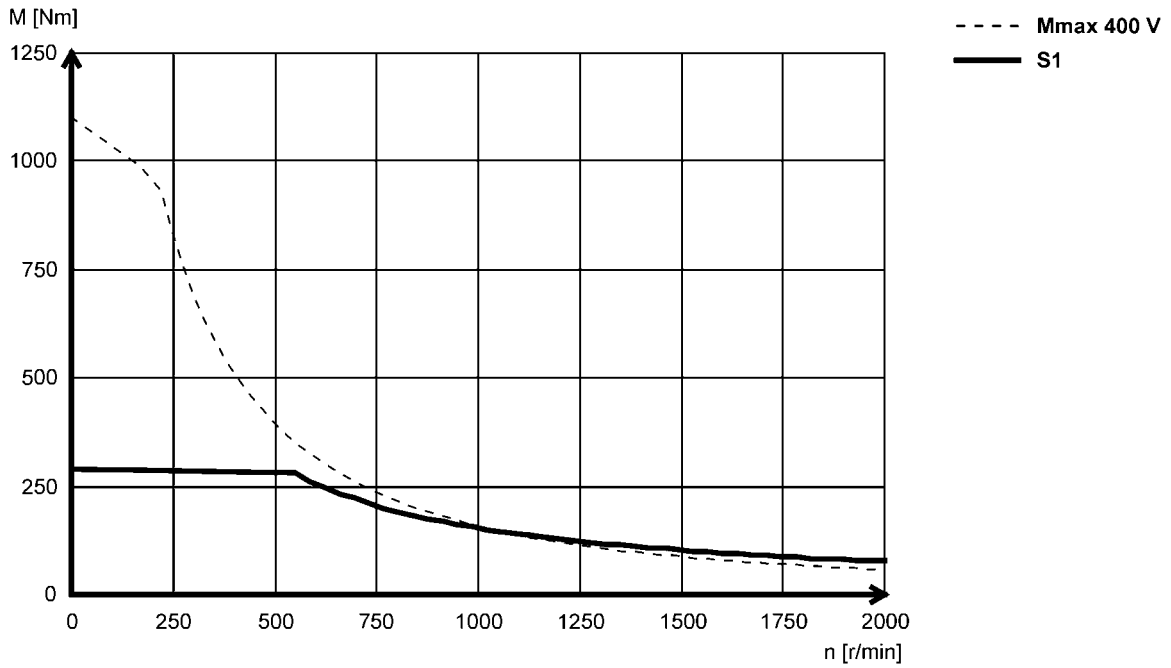



Torque characteristics

- The data applies to a mains connection voltage of 3 x 400 V.
- You can find further torque characteristics at **www.lenze.de/dsc**.

MCA26T10...5F□□ (forced ventilated)

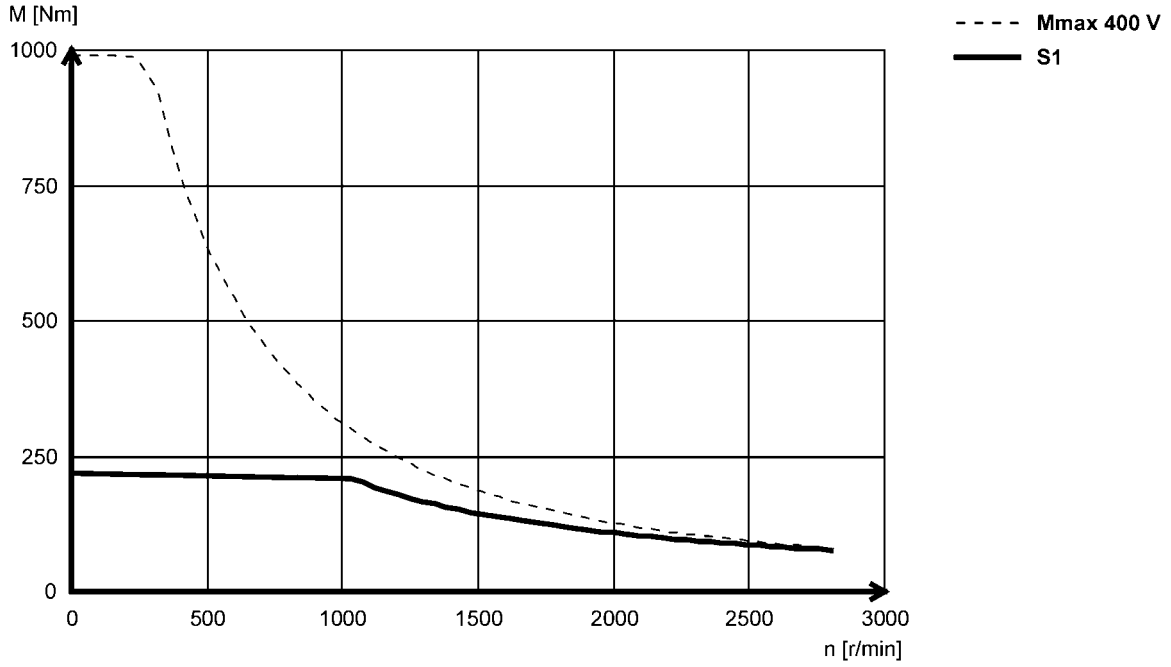

MCA26T10...2F□□ (forced ventilated)

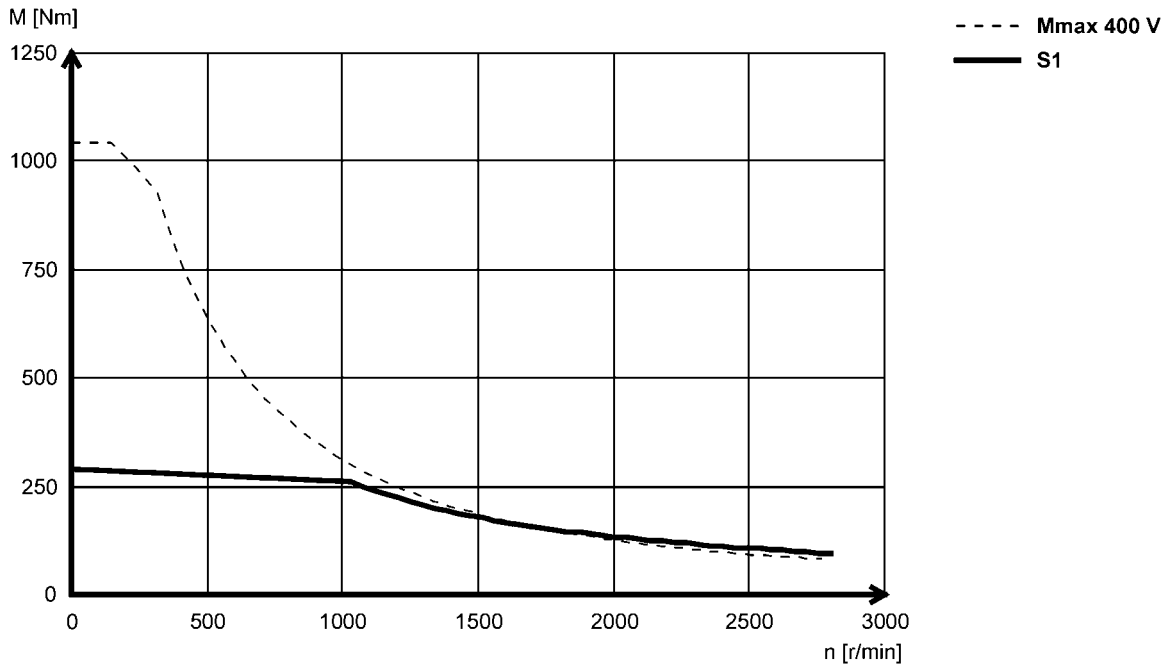



Torque characteristics

- The data applies to a mains connection voltage of 3 x 400 V.
- You can find further torque characteristics at **www.lenze.de/dsc**.

MCA26T12...5F□□ (forced ventilated)

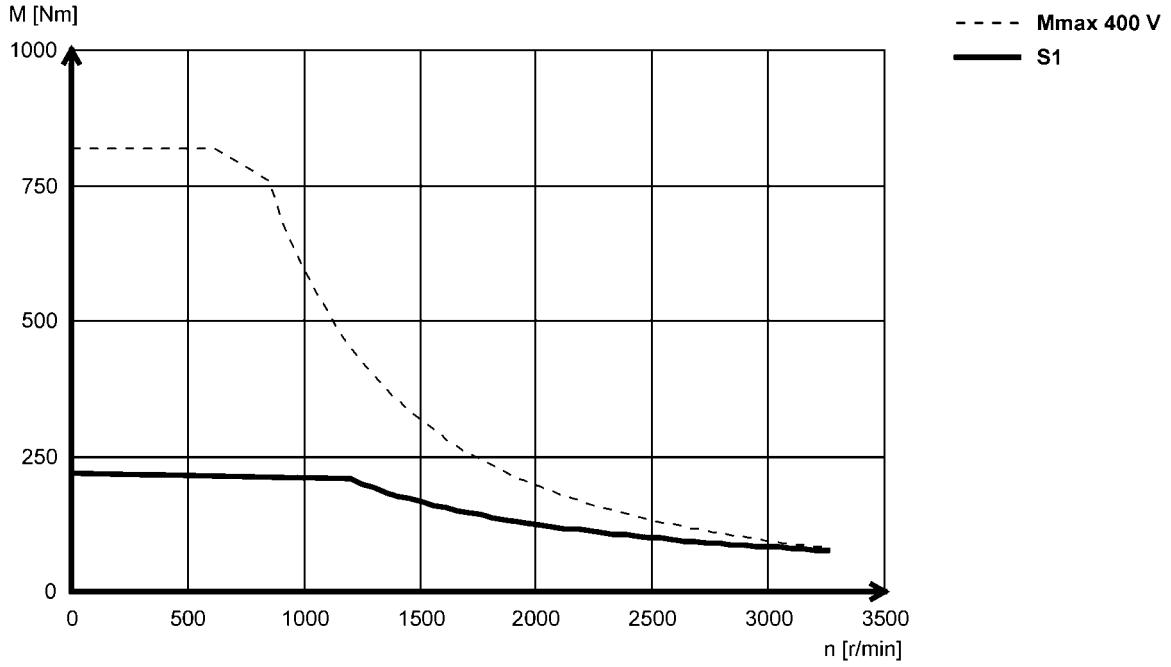

MCA26T12...2F□□ (forced ventilated)

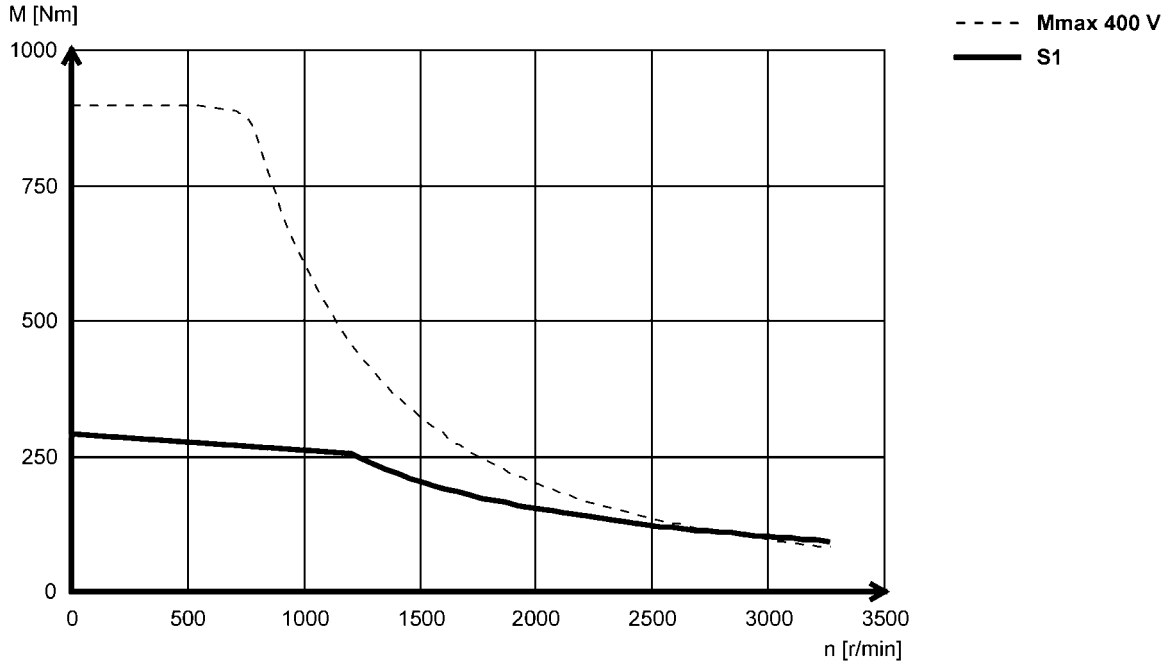



Torque characteristics

- The data applies to a mains connection voltage of 3 x 400 V.
- You can find further torque characteristics at **www.lenze.de/dsc**.

MCA26T22...5F□□ (forced ventilated)

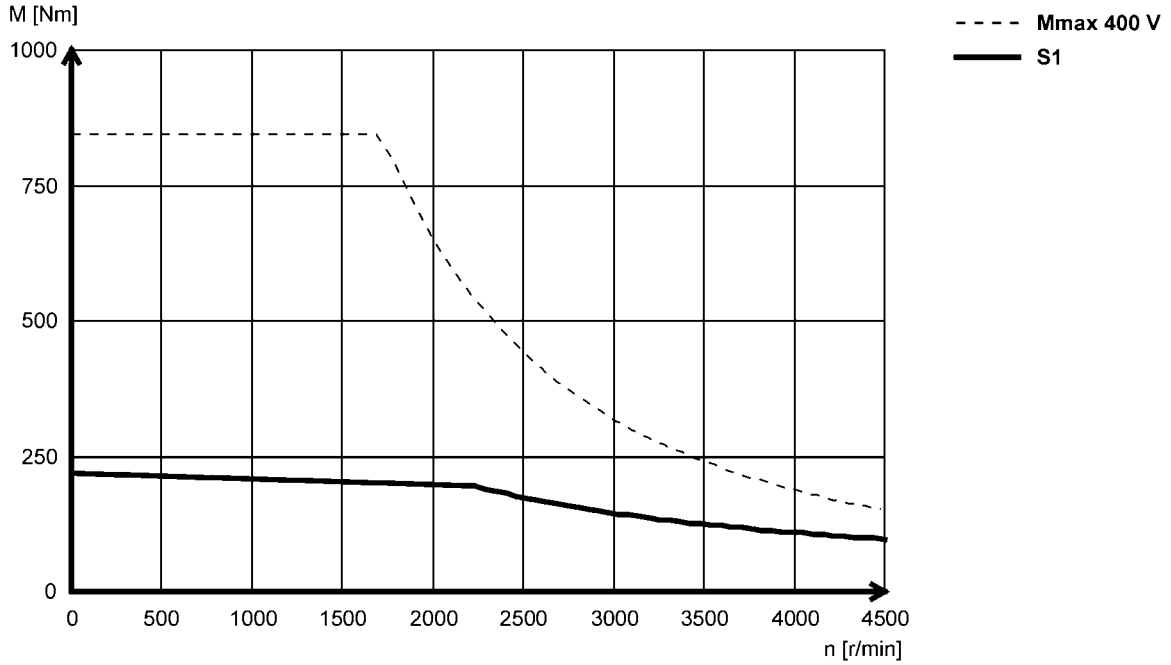

MCA26T22...2F□□ (forced ventilated)

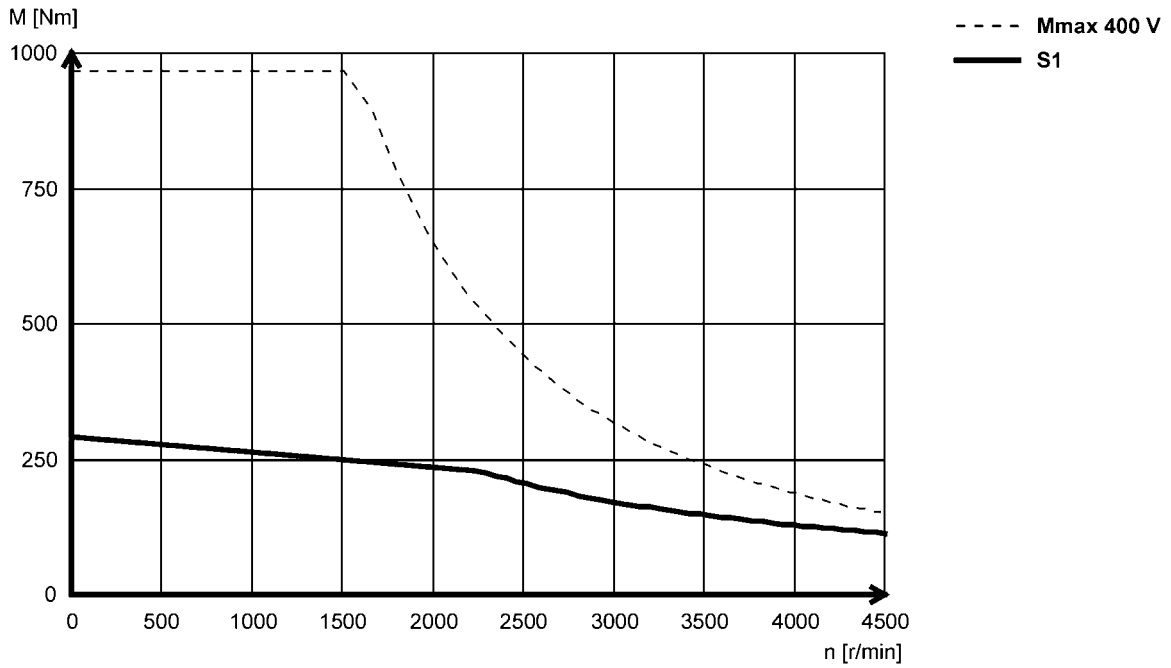



Dimensions, self-ventilated

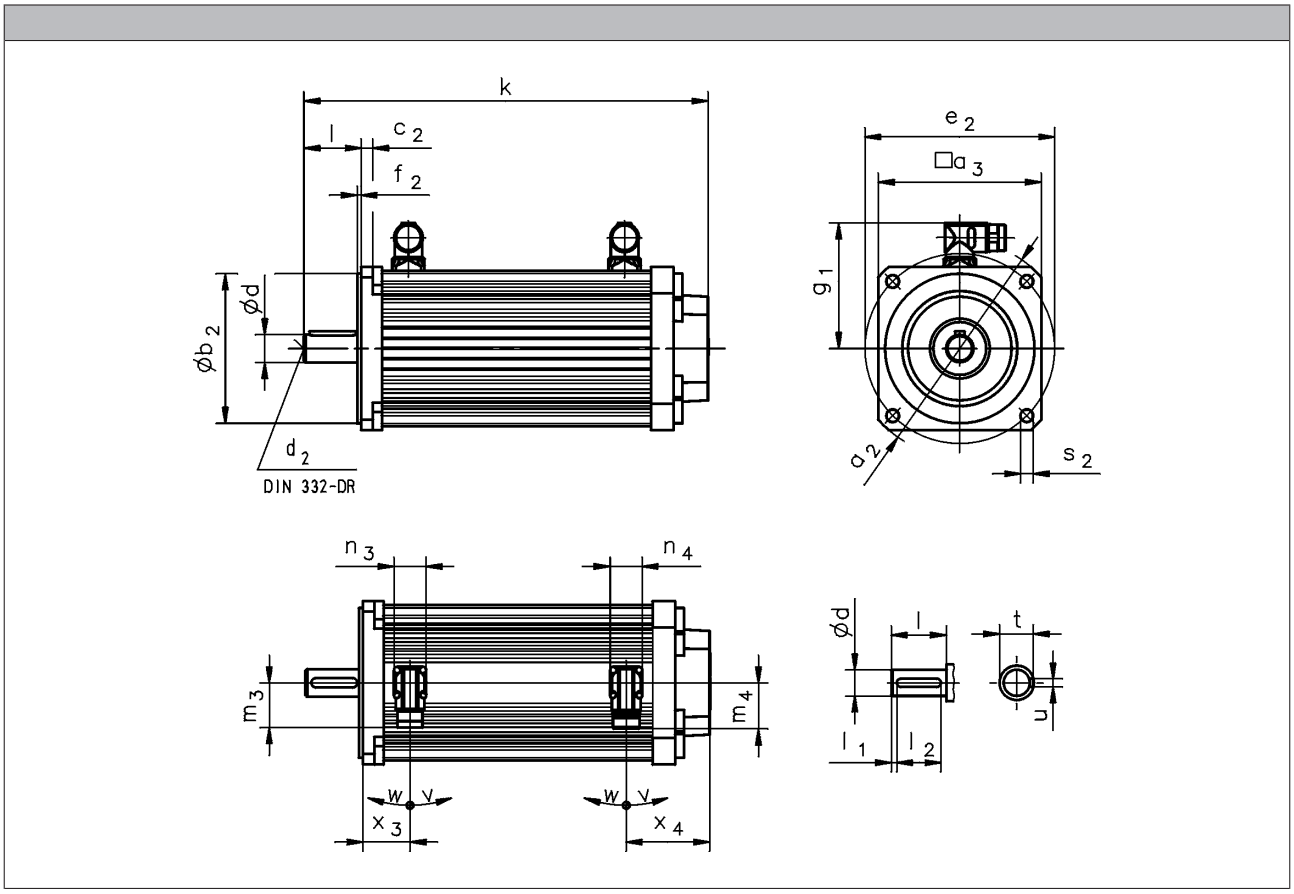

			MCA10I40	MCA13I41	MCA14L20	MCA17N23	MCA19S23	MCA21X25
					MCA14L41	MCA17N41	MCA19S42	MCA21X42
R□0 B0	k	[mm]	292	311	352	390	461	550
	x_3	[mm]	37	45	41	43	56	62
	x_4	[mm]	61	65	73			78
R□0 P□	k	[mm]	317	346	385	425	499	592
	x_3	[mm]	59	72	68	75	91	102
	x_4	[mm]	61	65	73			78
S□□ / E□□ / T20 / B0	k	[mm]	346	365	407	444	511	599
	x_3	[mm]	37	45	41	43	56	62
	x_4	[mm]	115	119	128	127	123	127
S□□ / E□□ / T20 / P□	k	[mm]	371	400	440	479	549	641
	x_3	[mm]	59	72	68	75	91	102
	x_4	[mm]	115	119	128	127	123	127

► Speed/angle sensor: RS0 / S□□ / E□□ / T20
► Brake: B0 / P□

6.11



Dimensions, self-ventilated

	g_1	n_3	n_4	m_3	m_4	v	w
	[mm]	[mm]	[mm]	[mm]	[mm]	[°]	[°]
MCA10I40	90	28	28	40	40	195	80
MCA13I41	102						
MCA14L20	109						
MCA14L41							
MCA17N23	118						
MCA17N41							
MCA19S23	151	40		71			
MCA19S42							
MCA21X25	162						
MCA21X42							

	d	d_2	l	l_1	l_2	u	t
	k6						
	[mm]	[mm]	[mm]	[mm]	[mm]	[mm]	[mm]
MCA10	14	M5	30	2.5	25	5.0	16.0
MCA13	19	M6	40	2.0	36	6.0	21.5
MCA14	24	M8	50	5.0	40	8.0	27.0
MCA17							
MCA19	28	M10	60		50		31.0
MCA21	38	M12	80		70	10.0	41.0

	a_2	a_3	b_2	c_2	e_2	f_2	s_2
			j6				
	[mm]	[mm]	[mm]	[mm]	[mm]	[mm]	[mm]
MCA10	120	102	80	8	100	3.0	7
			70		85	2.5	M6
MCA13	160	130	110	9	130	3.5	9.0
							M8
MCA14	188	142	130	10	165		11.0
			110		130		M8
MCA17	200	165	130	12	165		11.0
			110		130		M8
MCA19	250	192	180	11	215	4.0	13.0
			110		130	3.5	M8
MCA21		214	180		215	4.0	13.0
	300	250	230	12	265		
	250	214	110	11	130	3.5	M8



Dimensions, forced ventilated

Motors MCA13 to 19/21

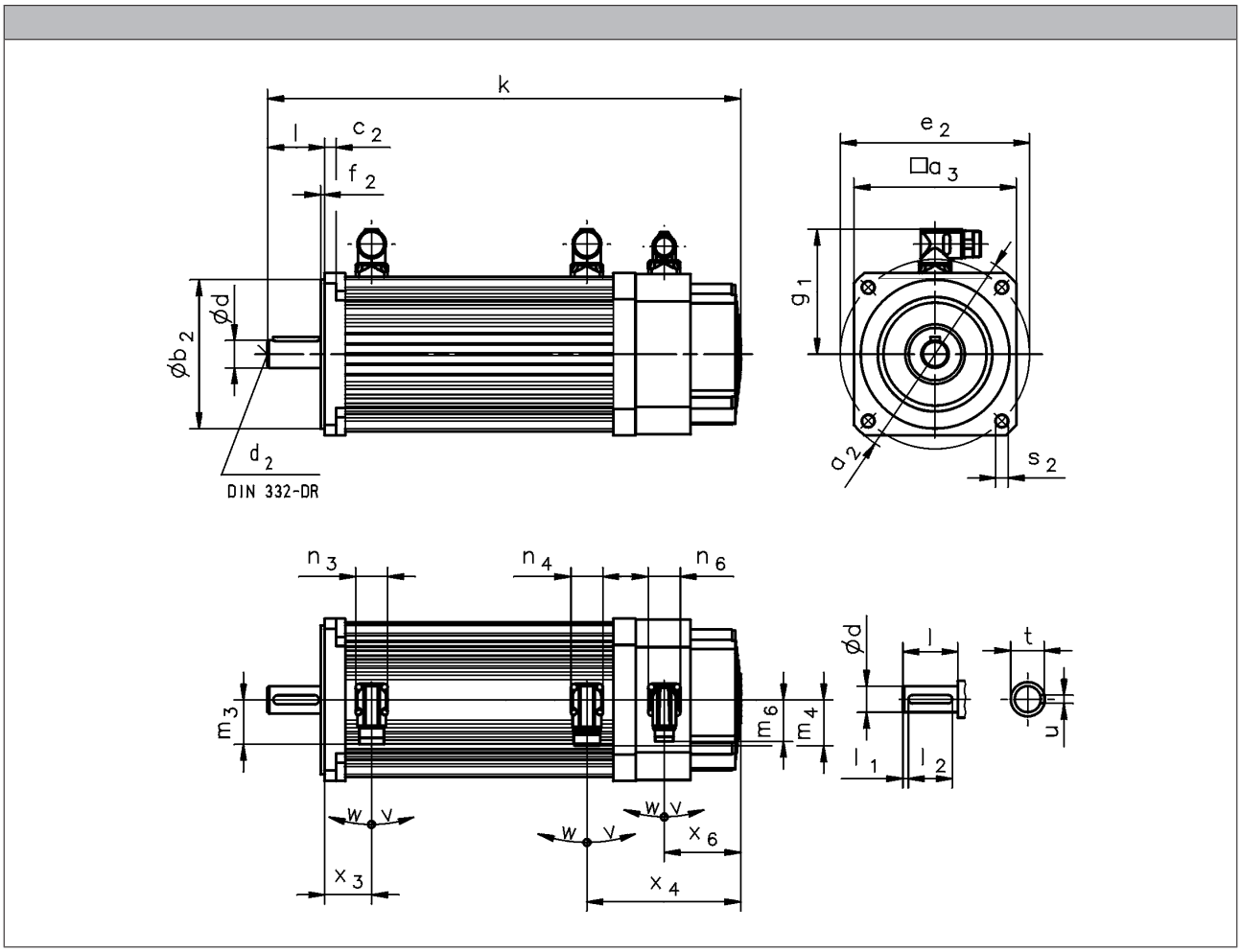

			MCA13I34	MCA14L16	MCA17N17	MCA19S17	MCA21X17
				MCA14L35	MCA17N35	MCA19S35	MCA21X35
R□0 B0	k	[mm]	379	414	476	558	646
	x_3	[mm]	45	41	43	56	62
	x_4	[mm]	133	135	159	170	174
R□0 P□	k	[mm]	414	447	511	596	688
	x_3	[mm]	72	68	75	91	102
	x_4	[mm]	133	135	159	170	174
S□□ / E□□ / T20 / B0	k	[mm]	433	469	530	608	695
	x_3	[mm]	45	41	43	56	62
	x_4	[mm]	187	190	213	220	223
S□□ / E□□ / T20 / P□	k	[mm]	468	502	565	646	737
	x_3	[mm]	72	68	75	91	102
	x_4	[mm]	187	190	213	220	223
	x_6	[mm]	73	67	94	103	96

► Speed/angle sensor: RS0 / S□□ / E□□ / T20
► Brake: B0 / P□



Dimensions, forced ventilated

Motors MCA13 to 19/21

	g_1	n_3	n_4	n_6	m_3	m_4	m_6	v	w
	[mm]	[mm]	[mm]	[mm]	[mm]	[mm]	[mm]	[°]	[°]
MCA13I34	102	28	28	28	40	40	37	195	80
MCA14L16	109								
MCA14L35									
MCA17N17	118								
MCA17N35									
MCA19S17	151	40			71				
MCA19S35									
MCA21X17	162								
MCA21X35									

	d	d_2	l	l_1	l_2	u	t
	k6						
	[mm]	[mm]	[mm]	[mm]	[mm]	[mm]	[mm]
MCA13	19	M6	40	2.0	36	6.0	21.5
MCA14	24	M8	50	5.0	40	8.0	27.0
MCA17							
MCA19	28	M10	60		50		31.0
MCA21	38	M12	80		70	10.0	41.0

	a_2	a_3	b_2	c_2	e_2	f_2	s_2
			j6				
	[mm]	[mm]	[mm]	[mm]	[mm]	[mm]	[mm]
MCA13	160	130	110	9	130	3.5	9.0
							M8
MCA14	188	142	130	10	165		11.0
			110		130		M8
MCA17	200	165	130	12	165		11.0
			110		130		M8
MCA19	250	192	180	11	215	4.0	13.0
			110		130	3.5	M8
MCA21		214	180		215	4.0	13.0
	300	250	230	12	265		
	250	214	110	11	130	3.5	M8



Dimensions, forced ventilated

MCA20/22/26 motors in B3 design

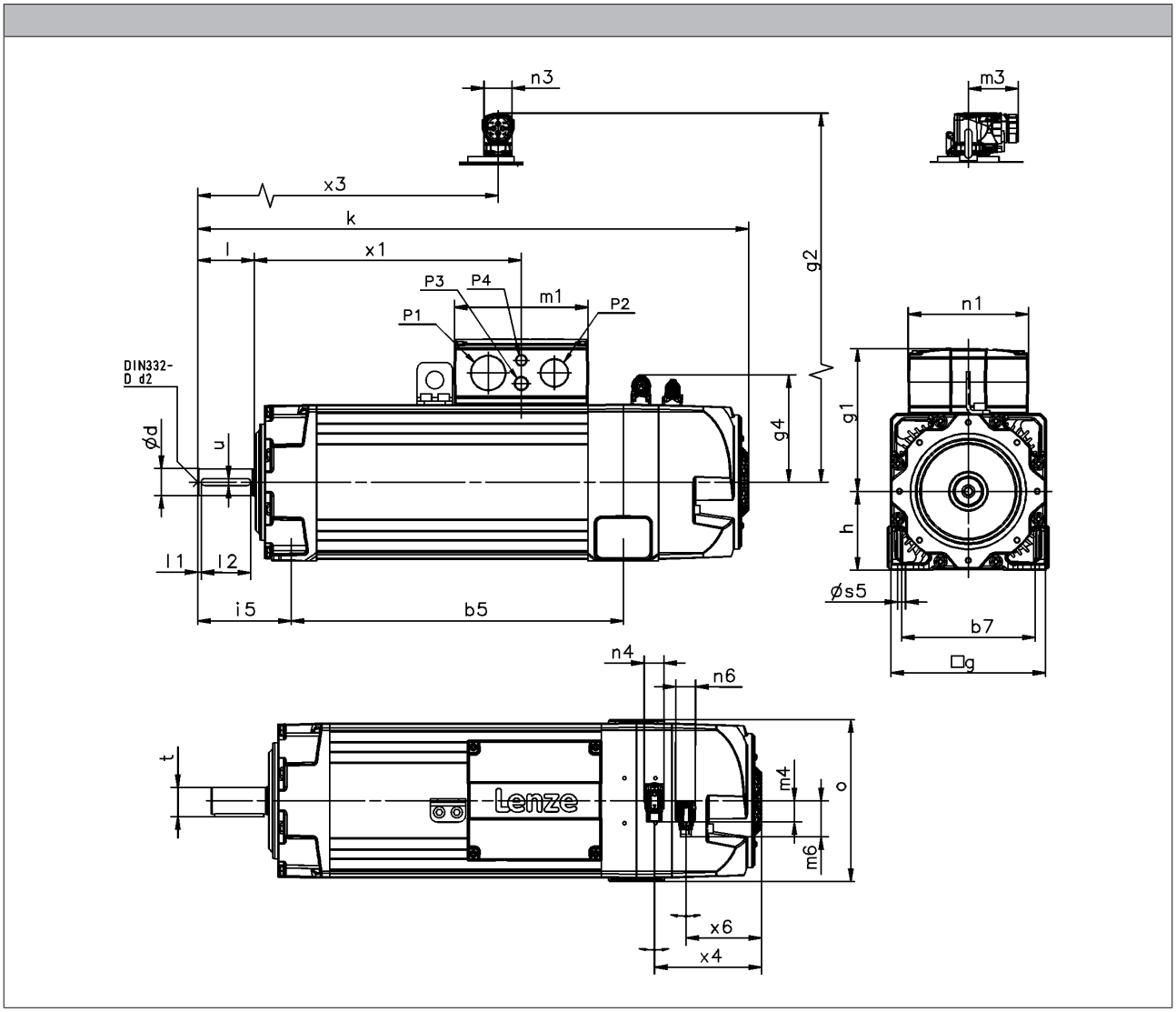

			MCA20	MCA22	MCA26
R□0 / E□□ / T□□ / S□□ / B0...F10	k	[mm]	666	783	970
R□0 / E□□ / T□□ / S□□ / B0...F1F	k	[mm]	754	865	1022
R□0 / E□□ / T□□ / S□□ / B0	x_4	[mm]	146	153	194
	m_4	[mm]	25.0	31.0	25.0
R□0 F1...F10	k	[mm]	753	878	1125
R□0 F1...F1F	k	[mm]	842	959	1177
R□0 F1	x_4	[mm]	151	157	201
	m_4	[mm]		31.0	
E□□ / T□□ / S□□ / F1...F10	k	[mm]	797	916	1163
E□□ / T□□ / S□□ / F1...F1F	k	[mm]	885	998	1215
E□□ / T□□ / S□□ / F1	x_4	[mm]	146	162	200
	m_4	[mm]		31.0	
R□0 / E□□ / T□□ / S□□ / F2...F10	k	[mm]	822	948	1163
R□0 / E□□ / T□□ / S□□ / F2...F1F	k	[mm]	910	1030	1215
R□0 / E□□ / T□□ / S□□ / F2	x_4	[mm]	146	162	200
	m_4	[mm]		31.0	



Dimensions, forced ventilated

MCA20/22/26 motors in B3 design

	g	g_1	g_2	g_4	m_1	m_3	m_6	n_1	n_3	n_4	n_6
	[mm]	[mm]	[mm]	[mm]	[mm]	[mm]	[mm]	[mm]	[mm]	[mm]	[mm]
MCA20	200	171	168	141	154	72	51	128	40	28	28
MCA22	220	203		153	190			171			
MCA26	260	256		173	234			212			

	o	P_1	P_2	P_3	P_4	x_1	x_3	x_6
	[mm]	[mm]	[mm]	[mm]	[mm]	[mm]	[mm]	[mm]
MCA20	206	M32x1.5	M25x1.5	M20x1.5	M16x1.5	299	422	101
MCA22	230	M50x1.5	M40x1.5			380		108
MCA26	269	M63x1.5	M50x1.5			465		152

	d	d	d_2	l	l_1	l_2	u	t
	k6	m6		-0.7 ... 0.3				
	[mm]	[mm]	[mm]		[mm]	[mm]	[mm]	[mm]
MCA20	38		M12	80	5.0	70	10.0	41.0
MCA22								
MCA26		55	M20	110		100	16.0	59.0

	h	b_5	b_7	s_5	i_5
	[mm]	[mm]	[mm]	[mm]	[mm]
MCA20	100	366	160	11.5	134
MCA22	112	472	190		133
MCA26	132	581	215	14.0	165

- ► Speed/angle sensor: RS0 / S□□ / E□□ / T□□
- ► Brake: B0 / F1 / F2
- ► Blower: F10 / F1F



Dimensions, forced ventilated

MCA20/22/26 motors in B35 design

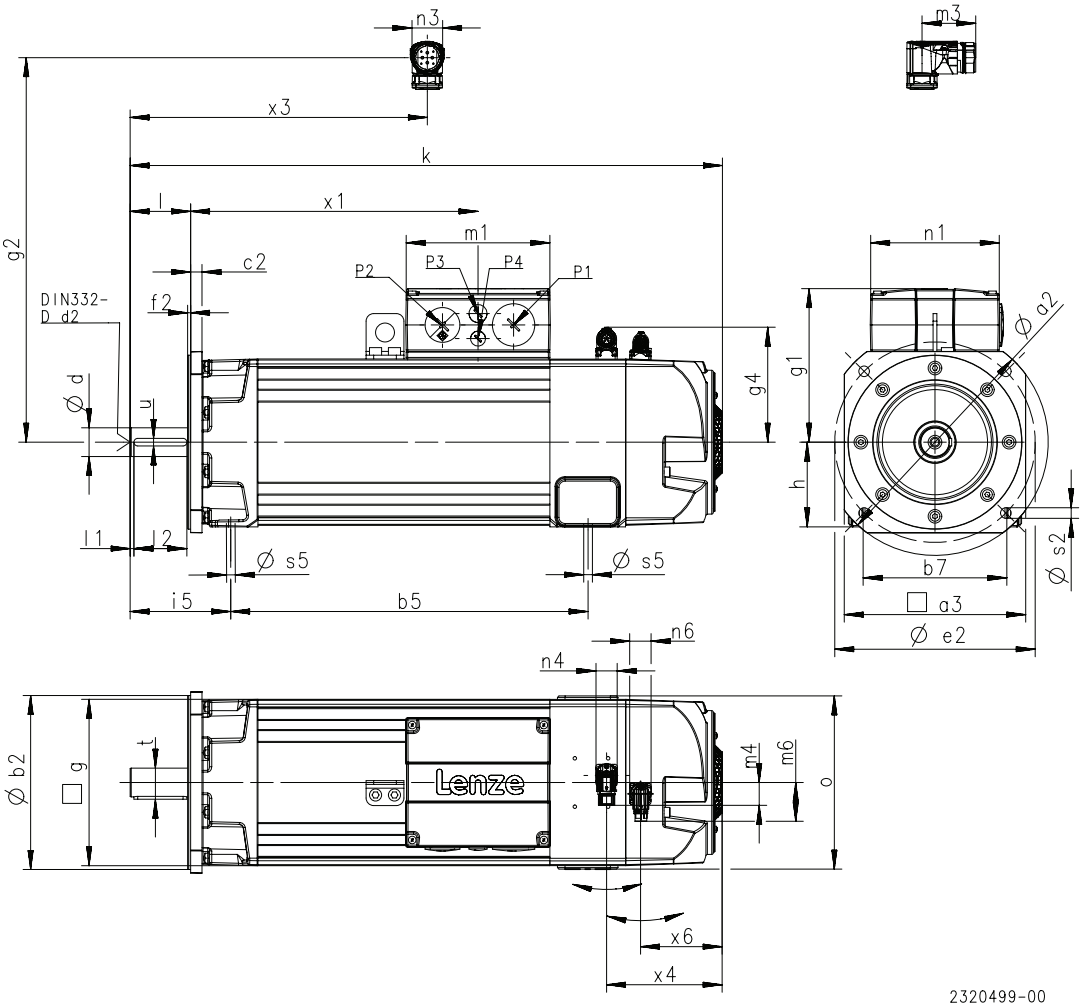

			MCA20	MCA22	MCA26
R□0 / E□□ / T□□ / S□□ / B0...F10	k	[mm]	666	783	970
R□0 / E□□ / T□□ / S□□ / B0...F1F	k	[mm]	754	865	1022
R□0 / E□□ / T□□ / S□□ / B0	x_4	[mm]	146	153	194
	m_4	[mm]	25.0	31.0	25.0
R□0 F1...F10	k	[mm]	753	878	1125
R□0 F1...F1F	k	[mm]	842	959	1177
R□0 F1	x_4	[mm]	151	157	201
	m_4	[mm]		31.0	
E□□ / T□□ / S□□ / F1...F10	k	[mm]	797	916	1163
E□□ / T□□ / S□□ / F1...F1F	k	[mm]	885	998	1215
E□□ / T□□ / S□□ / F1	x_4	[mm]	146	162	200
	m_4	[mm]		31.0	
R□0 / E□□ / T□□ / S□□ / F2...F10	k	[mm]	822	948	1163
R□0 / E□□ / T□□ / S□□ / F2...F1F	k	[mm]	910	1030	1215
R□0 / E□□ / T□□ / S□□ / F2	x_4	[mm]	146	162	200
	m_4	[mm]		31.0	



Dimensions, forced ventilated

MCA20/22/26 motors in B35 design

	g	g_1	g_2	g_4	m_1	m_3	m_6	n_1	n_3	n_4	n_6
	[mm]	[mm]	[mm]	[mm]	[mm]	[mm]	[mm]	[mm]	[mm]	[mm]	[mm]
MCA20	200	171	168	141	154	72	51	128	40	28	28
MCA22	220	203		153	190			171			
MCA26	260	256		173	234			212			

	o	P_1	P_2	P_3	P_4	x_1	x_3	x_6
	[mm]	[mm]	[mm]	[mm]	[mm]	[mm]	[mm]	[mm]
MCA20	206	M32x1.5	M25x1.5	M20x1.5	M16x1.5	299	422	101
MCA22	230	M50x1.5	M40x1.5			380		108
MCA26	269	M63x1.5	M50x1.5			465		152

	d	d	d_2	l	l_1	l_2	u	t
	k6	m6		-0.7 ... 0.3				
	[mm]	[mm]	[mm]		[mm]	[mm]	[mm]	[mm]
MCA20	38		M12	80	5.0	70	10.0	41.0
MCA22								
MCA26		55	M20	110		100	16.0	59.0

	h	b_5	b_7	s_5	i_5
	[mm]	[mm]	[mm]	[mm]	[mm]
MCA20	100	366	160	11.5	134
MCA22	112	472	190		133
MCA26	132	581	215	14.0	165

	a_2	a_3	b_2	b_2	c_2	e_2	f_2	s_2
			j6	h6				
	[mm]	[mm]	[mm]	[mm]	[mm]	[mm]	[mm]	[mm]
MCA20	250	196	180		15	215	4.0	14
MCA22	300	240	230			265		
MCA26	400	320		300		350	5.0	18

- ► Speed/angle sensor: RS0 / S□□ / E□□ / T□□
- ► Brake: B0 / F1 / F2
- ► Blower: F10 / F1F





Permanent magnet holding brake

The asynchronous servo motors MCA10 to 19 and 21 can be fitted with integral permanent magnet holding brakes.
In the case of permanent magnet brakes, the rated torque applies solely as holding torque at standstill. This is due to the nature of their design. During braking from full motor speed, e.g. in the event of emergency stops, the braking torque is significantly reduced.
As such, they may not be used as safety elements (particularly with lifting axes) without additional measures being implemented.
The brakes are activated when the supply voltage is disconnected (closed-circuit principle). When using the brakes purely as holding brakes, virtually no wear occurs on the friction surfaces.

For traversing axes, adherence to the permissible load/brake motor (J_L / J_{MB}) moment of inertia ensures that the permissible maximum switching rate of the brake will not be exceeded and at least 2,000 emergency stop functions can be performed from a speed of 3,000 rpm.
For lifting axes, the load torque resulting from the weight acts additionally. In this case the specifications for J_L / J_{MB} do not apply.

Caution:
The brakes used are not safety brakes in the sense that a reduction in torque may arise as a result of disruptive factors that cannot be influenced, e.g. oil ingress.

The ohmic voltage drop along the cable must be taken into consideration in long motor supply cables and must be compensated for by a higher voltage at the line input.

The following applies for Lenze system cables:

$$U[V] = U_B[V] + 0.08\frac{[V]}{[A]\cdot[m]}\cdot I_{Lg}[m]\cdot I_B[A]$$

If no suitable voltage (incorrect value, incorrect polarity) is applied to the brake, the brake will be applied and can be overheated and destroyed by the motor continuing to rotate.
The shortest switching times of the brakes are achieved by DC switching of the voltage. A spark suppressor is required to suppress interference and to increase the service life of the relay contacts here.



Permanent magnet holding brake



Permanent magnet holding brake

Rated data with standard braking torque

► The figures stated apply to servo motors. They only apply to geared servo motors when the servo motor is connected via a mounting flange.

	$U_{N, DC}$ [3, 4, 7]	$U_{N, AC}$ [5, 7]	M_N	M_N	M_{av}	I_N [2]	J	t_1 [1]	t_2 [1]	Q_E [6]	m	J_{MB}	J_L/J_{MB}
			20 °C	120 °C	120 °C								
	[V]	[V]	[Nm]	[Nm]	[Nm]	[A]	[kgcm²]	[ms]	[ms]	[J]	[kg]	[kgcm²]	
MCA10	24		3.30	2.50	1.20	0.50	0.38	10.0	20.0	350	0.90	2.78	24.5
	205					0.060							
MCA13	24		12.0	11.0	5.50	0.67	1.06	20.0	29.0	400	0.80	9.36	7.70
	205					0.080							
MCA14	24		15.0	12.0	6.00	0.75	3.60	13.0	30.0	700	1.50	22.8	5.20
	205					0.090							
MCA17	24		24.0	22.0	11.0	0.75		25.0	50.0	1200		39.6	5.10
	205					0.090							
MCA19	24		46.0	40.0	18.0	1.00	9.50		73.0	1900	2.70	81.5	3.70
	205					0.12							
MCA21	24		88.0	80.0	35.0	1.46	31.8	53.0	97.0	2800	5.00	212	1.70
	205					0.18							

[1] Engagement and disengagement times are valid for rated voltage (± 0 %) and protective circuit for brakes with varistor for DC switching. The times may increase without a protective circuit.
[2] The currents are the maximum values when the brake is cold (value used for dimensioning the current supply). The values for a motor at operating temperature are considerably lower.
[3] With 24 V DC brake: smoothed DC voltage, ripple ≤ 1 %.
With 205 V DC brake: connection to 230 V AC through rectifier.
[4] UR not possible in the case of a brake with a 205 V supply voltage.
[5] UR not possible in the case of a brake with 230 V supply voltage.
[6] Maximum switching energy per emergency stop at n = 3000 r/min for at least 2000 emergency stops.
[7] Voltage tolerance: permanent magnet brakes -10% to +5%
spring-applied brakes ±10%



Permanent magnet holding brake

Rated data with increased braking torque

► These ratings apply only for geared servo motors with integrated servo motor (without mounting flange).

	$U_{N, DC}$ [3, 4, 7]	M_N	M_N	M_{av}	I_N [2]	J	t_1 [1]	t_2 [1]	Q_E [6]	m	J_{MB}	J_L/J_{MB}
		20 °C	120 °C	120 °C								
	[V]	[Nm]	[Nm]	[Nm]	[A]	[kgcm²]	[ms]	[ms]	[J]	[kg]	[kgcm²]	
MCA10	24	6.00	5.00	2.50	0.67	1.06	20.0	29.0	400	0.80	3.46	22.4
	205				0.80							
MCA13	24	15.0	12.0	6.00	0.75	3.60	13.0	30.0	700	1.50	11.9	8.40
	205				0.090							
MCA14	24	23.0	20.0	20.0	0.92	9.50	18.0	55.0	1350	2.40	22.8	6.60
	205				0.12							
MCA17	24				0.92						45.5	5.00
	205				0.12							
MCA19	24	48.0	40.0		1.46	31.8	30.0	100	2800	4.80	104	4.50
	205				0.18							
MCA21	24	88.0	80.0	35.0	1.46		53.0	97.0		5.00	212	1.70
	205				0.18							

[1] Engagement and disengagement times are valid for rated voltage (± 0 %) and protective circuit for brakes with varistor for DC switching. The times may increase without a protective circuit.
[2] The currents are the maximum values when the brake is cold (value used for dimensioning the current supply). The values for a motor at operating temperature are considerably lower.
[3] With 24 V DC brake: smoothed DC voltage, ripple ≤ 1 %.
With 205 V DC brake: connection to 230 V AC through rectifier.
[4] UR not possible in the case of a brake with a 205 V supply voltage.
[5] UR not possible in the case of a brake with 230 V supply voltage.
[6] Maximum switching energy per emergency stop at n = 3000 r/min for at least 2000 emergency stops.
[7] Voltage tolerance: permanent magnet brakes -10% to +5%
spring-applied brakes ±10%



Spring-applied holding brake

Spring-operated holding brakes are available for the asynchronous servo motors MCA20, 22 and 26.
The brakes are activated when the supply voltage is disconnected (closed-circuit principle). When using the brakes purely as holding brakes, virtually no wear occurs on the friction surfaces.

Caution:
The brakes used are not safety brakes in the sense that a reduction in torque may arise as a result of disruptive factors that cannot be influenced, e.g. oil ingress.

The ohmic voltage drop along the cable must be taken into consideration in long motor supply cables and must be compensated for by a higher voltage at the line input.

The following applies for Lenze system cables:

$$U[V] = U_B[V] + 0.08\frac{[V]}{[A]\cdot[m]}\cdot l_{Lg}[m]\cdot I_B[A]$$

If no suitable voltage (incorrect value, incorrect polarity) is applied to the brake, the brake will be applied and can be overheated and destroyed by the motor continuing to rotate.
The shortest switching times of the brakes are achieved by DC switching of the voltage. A spark suppressor is required to suppress interference and to increase the service life of the relay contacts here.



Spring-applied holding brake



Spring-applied holding brake

Rated data with standard braking torque

► The figures stated apply to servo motors. They only apply to geared servo motors when the servo motor is connected via a mounting flange.

	$U_{N, DC}$ [3, 4, 7]	$U_{N, AC}$ [5, 7]	M_N	M_N	M_{av}	I_N [2]	J	t_1 [1]	t_2 [1]	Q_E [6]	m	J_{MB}	J_L/J_{MB}
			20 °C	120 °C	120 °C								
	[V]	[V]	[Nm]	[Nm]	[Nm]	[A]	[kgcm²]	[ms]	[ms]	[J]	[kg]	[kgcm²]	
MCA20	24		90.0	80.0	50.0	3.13	6.88	70.0	220	18000	13.0	177	19.6
		230				0.37							
MCA22	24		150	130	80.0	3.75	18.1	50.0	260	23000	20.5	505	8.20
		230				0.44		130					
MCA26	24		300	260	160	3.75	36.3	175	320	39000	26.0	1405	12.7
		230			200	0.37	70.4		360	51000	30.7		

Rated data with increased braking torque

► The figures stated apply to servo motors. They only apply to geared servo motors when the servo motor is connected via a mounting flange.

	$U_{N, DC}$ [3, 4, 7]	$U_{N, AC}$ [5, 7]	M_N	M_N	M_{av}	I_N [2]	J	t_1 [1]	t_2 [1]	Q_E [6]	m	J_{MB}	J_L/J_{MB}
			20 °C	120 °C	120 °C								
	[V]	[V]	[Nm]	[Nm]	[Nm]	[A]	[kgcm²]	[ms]	[ms]	[J]	[kg]	[kgcm²]	
MCA20	24		150	130	100	2.58	14.1	70.0	240	31000	15.4	189	33.0
		230				0.30							
MCA22	24		300	260	160	3.75	36.3	175	320	39000	26.0	523	14.1
		230				0.44		130	310				
MCA26	24		500	430	260	3.75	70.4	175	390	51000	30.8	1405	12.7
		230				0.44							

[1] Engagement and disengagement times are valid for rated voltage (± 0 %) and protective circuit for brakes with varistor for DC switching. The times may increase without a protective circuit.
[2] The currents are the maximum values when the brake is cold (value used for dimensioning the current supply). The values for a motor at operating temperature are considerably lower.
[3] With 24 V DC brake: smoothed DC voltage, ripple ≤ 1 %.
With 205 V DC brake: connection to 230 V AC through rectifier.
[4] UR not possible in the case of a brake with a 205 V supply voltage.
[5] UR not possible in the case of a brake with 230 V supply voltage.
[6] Maximum switching energy per emergency stop at n = 3000 rpm for at least 300 emergency stops, maximally 4 emergency stops per hour.
[7] Voltage tolerance: permanent magnet brakes -10% to +5%
spring-applied brakes ±10%



Resolver

Stator-fed resolver with two stator windings offset by 90° and one rotor winding with transformer winding.

Speed/angle sensor					
	1)			RS0	RV0
Product key					
				RS0	RV03
Resolution					
Angle			[']	0.80	
Accuracy					
			[']	-10 ... 10	
Absolute positioning					
				1 revolution	
Max. speed					
	n_{max}		[r/min]	8000	
Max. input voltage					
DC	$U_{in,max}$		[V]	10.0	
Max. input frequency					
	$f_{in,max}$		[kHz]	4.00	
Ratio					
Stator / rotor		± 5 %		0.30	
Rotor impedance					
	Z_{ro}		[Ω]	51 + j90	
Stator impedance					
	Z_{so}		[Ω]	102 + j150	
Impedance					
	Z_{rs}		[Ω]	44 + j76	
Min. insulation resistance					
At DC 500 V	R		[MΩ]	10.0	
Number of pole pairs					
				1	
Max. angle error					
			[']	-10 ... 10	
Inverter assignment					
				i700 E84AVTC E94A ECS EVS93	E84AVTC E94A ECS EVS93

1) 6 - Product key > speed/angle sensor

Speed-dependent safety functions

Suitable for safety function					
				No	Yes
Max. permissible angular acceleration					
MCA10 ... MCA19 2)	α	[rad/s²]			22000
MCA20 ... MCA26 2)	α	[rad/s²]			22000
Functional safety					
IEC 61508					SIL3
EN 13849-1					Up to Performance Level e

2) 1 - Single encoder concepts with resolvers



Incremental encoder and SinCos absolute value encoder

Encoder type			TTL incremental		SinCos incremental	
Speed/angle sensor						
	1)		T20	T40	S20	S1S
Product key						
			IG2048-5V-T	IG4096-5V-T	IG2048-5V-S	IG1024-5V-V3
Encoder type						
					Single-turn	
Pulses						
			2048	4096	2048	1024
Output signals						
			TTL		1 Vss	
Interfaces						
			A, B, N track and inverted			
Absolute revolutions						
			0			
Resolution						
Angle 2)		[']	2.60	1.30	0.40	
Accuracy						
		[']	-2 ... 2		-0.8 ... 0.8	
Min. input voltage						
DC	$U_{in,min}$	[V]	4.75		4.50	4.75
Max. input voltage						
DC	$U_{in,max}$	[V]	5.25		5.50	5.25
Max. speed						
	n_{max}	[r/min]	8789		5273	8000
Max. current consumption						
	I_{max}	[A]	0.15		0.10	0.070
Limit frequency						
	f_{max}	[kHz]	300		180	200
Inverter assignment						
			E84AVTC E94A ECS EVS93			E94A

1) 6 - Product key > speed/angle sensor

2) Inverter-dependent.

Speed-dependent safety functions

Suitable for safety function						
			No	No	No	Yes
Max. permissible angular acceleration						
MQA20 ... MQA26	α	[rad/s²]				73000
Functional safety						
IEC 61508						SIL3
EN 13849-1						Up to Performance Level e



Incremental encoder and SinCos absolute value encoder

Encoder type			SinCos absolute value				
Speed/angle sensor	[1]		EQI	SRS	SRM	ECN	EQN
Product key			AM32-5V-E	AS1024-8V-H	AM1024-8V-H	AS2048-5V-E	AM2048-5V-E
Encoder type			Multi-turn	Single-turn	Multi-turn	Single-turn	Multi-turn
Pulses			32	1024		2048	
Output signals			1 Vss				
Interfaces			EnDat	Hiperface		EnDat	
Absolute revolutions			4096	1	4096	1	4096
Resolution							
Angle		[']	0.40				
Accuracy		[']	-5 ... 5	-0.8 ... 0.8		-0.6 ... 0.6	
Min. input voltage							
DC	$U_{in,min}$	[V]	4.75	7.00		4.75	
Max. input voltage							
DC	$U_{in,max}$	[V]	5.25	12.0		5.25	
Max. speed							
	n_{max}	[r/min]	12000	6000		12000	
Max. current consumption							
	I_{max}	[A]	0.17	0.080		0.15	0.25
Limit frequency							
	f_{max}	[kHz]	6.00	200			
Inverter assignment			E94A	E84AVTC E94A ECS EVS93		E94A	

[1] 6 - Product key > speed/angle sensor



Blower

Rated data for 50 Hz

		Degree of protection	Number of phases					
				U_{min}	U_{max}	$U_{N, AC}$	P_N	I_N
				[V]	[V]	[V]	[kW]	[A]
MCA13	F10	IP54	1	210	240	230	0.019	0.12
MCA14								
MCA17							0.040	0.25
MCA19								
MCA20	F10 F1F	IP23s			250		0.17	0.73
MCA21	F10	IP54			240		0.060	0.26
MCA22	F10 F1F	IP23s IP54			250		0.24	1.05
MCA26							0.40	1.75

Rated data for 60 Hz

		Degree of protection	Number of phases					
				U_{min}	U_{max}	$U_{N, AC}$	P_N	I_N
				[V]	[V]	[V]	[kW]	[A]
MCA13	F10	IP54	1	210	240	230	0.019	0.12
MCA14								
MCA17							0.040	0.25
MCA19								
MCA20	F10 F1F	IP23s			250		0.20	0.90
MCA21	F10	IP54			240		0.060	0.26
MCA22	F10 F1F	IP23s IP54			250		0.28	1.23
MCA26							0.41	1.82



Temperature monitoring

The thermal sensors (1x KTY 83-110) used continuously monitor the motor temperature. The temperature signal is transmitted over the system cable of the feedback system to the servo controller.
This means that the temperature of the motor is determined with great accuracy in the permitted operating range and at the same time the overtemperature response configured in the controller is executed in the event of overtemperature in one of the winding phases.

Variation of resistance

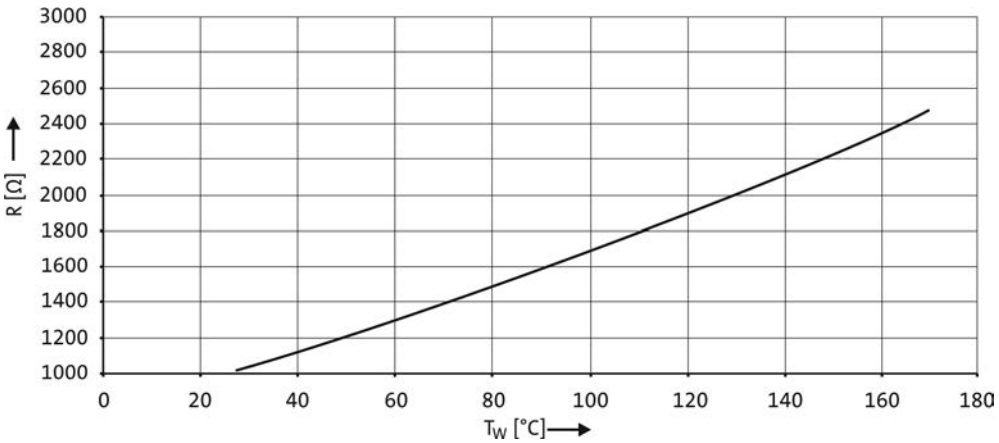

► If the thermal sensor is supplied with a measurement current of 1 mA, the above relationship between the temperature and the resistance applies.



Terminal box

Motors MCA10 to 19/21

If a servo motor is to be connected to an existing cable or plug connectors are not to be used for other reasons, the connection can also be made via a terminal box.

The motor can either be fitted with a terminal box for the power connection and motor holding brake or a second terminal box provided to connect the motor feedback and blower (if applicable).

Connections

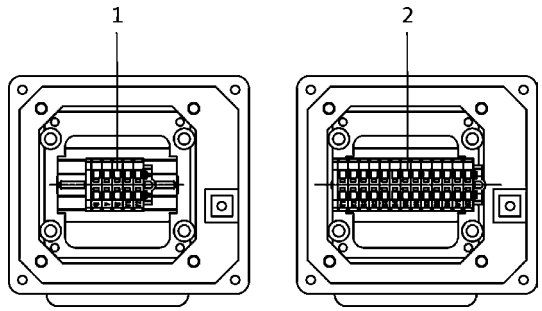

1: Power connection + brake connection + PE connection.

2: Angle/speed sensor connection + thermal sensor connection

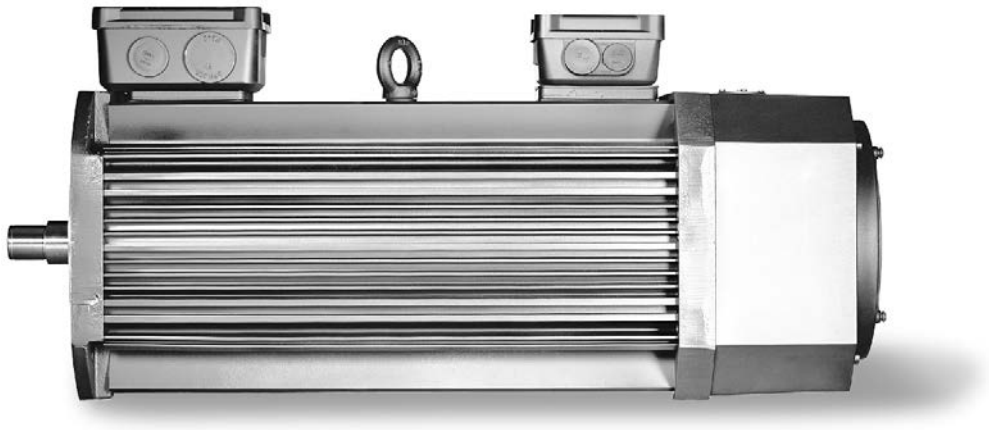

MCA asynchronous servo motors with blower and terminal box



Terminal box

Motors MCA10 to 19/21

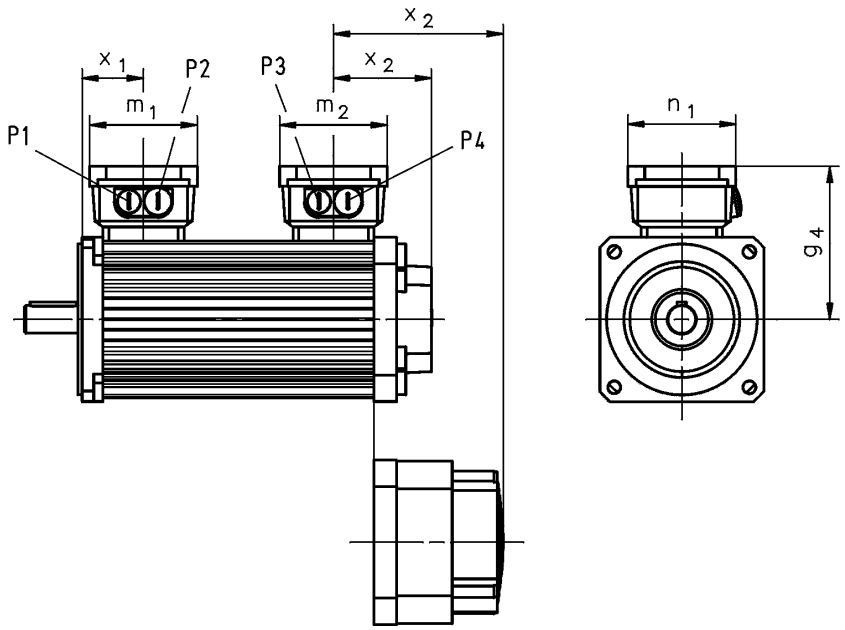

			MCA10I40	MCA13I41	MCA14L20	MCA17N23	MCA19S23	MCA21X25
					MCA14L41	MCA17N41	MCA19S42	MCA21X42
R□0 B0	x_2	[mm]	78	77	85		93	97
R□0 P□	x_2	[mm]	78	77	85		93	97
S□□ / E□□ / T20 / B0	x_2	[mm]	132	131	140	139	143	147
S□□ / E□□ / T20 / P□	x_2	[mm]	132	131	140	139	143	147

			MCA13I34	MCA14L16	MCA17N17	MCA19S17	MCA21X17
				MCA14L35	MCA17N35	MCA19S35	MCA21X35
R□0 B0	x_2	[mm]	145	147	171	190	193
R□0 P□	x_2	[mm]	145	147	171	190	193
S□□ / E□□ / T20 / B0	x_2	[mm]	199	202	225	240	243
S□□ / E□□ / T20 / P□	x_2	[mm]	199	202	225	240	243

► Speed/angle sensor: RS0 / S□□ / E□□ / T20
► Brake: B0 / P□

	g_4	m_1	m_2	n_1	x_1	P_1	P_2	P_3	P_4
	[mm]	[mm]	[mm]	[mm]	[mm]	[mm]	[mm]	[mm]	[mm]
MCA10	113	93	93	93	54	M20x1.5	M20x1.5	M20x1.5	M20x1.5
MCA13	125				57				
MCA14	133				53				
MCA17	141				55				
MCA19	158	115	115	115	64	M25x1.5	M32x1.5		
MCA21	169				70				



ICN connector

Servo motors MCA10 to 21 provide ICN connectors as standard for electrical connection. Servo motors MCA22 and MCA26 provide a terminal box for electrical connection.

A connector is used for the connection of motor and brake.
The connections to the feedback system/temperature monitoring and the blower each employ a separate connector.

The connectors can be rotated through 270° and are fitted with a bayonet catch for SpeedTec connectors. As the connector fixing is also compatible with conventional union nuts. Existing mating connectors can therefore still be used without difficulty.

Connection for power and brake

► MCA10 to 17

Pin assignment			
Contact	Designation	Meaning	
1	BD1	Holding brake +	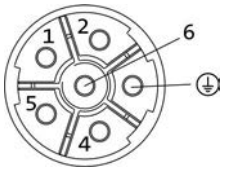
2	BD2	Holding brake -	
PE	PE	PE conductor	
4	U	Phase U power	
5	V	Phase V power	
6	W	Phase W power	

► MCA19 to 21

Pin assignment			
Contact	Designation	Meaning	
1		Not assigned	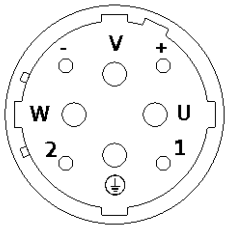
2			
+	BD1	Holding brake +	
-	BD2	Holding brake -	
PE	PE	PE conductor	
U	U	Phase U power	
V	V	Phase V power	
W	W	Phase W power	



ICN connector

Feedback connection

► Resolver

Pin assignment			
Contact	Designation	Meaning	
1	+Ref	Transformer windings	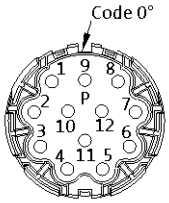
2	-Ref		
3	+VCC ETS	Supply: Electronic nameplate	
4	+COS	Cosine stator windings	
5	-COS		
6	+SIN	Sine stator windings	
7	-SIN		
8		Not assigned	
9			
10			
11	+KTY	KTY temperature sensor	
12	-KTY		

► Hiperface incremental encoder and SinCos absolute value encoder

Pin assignment			
Contact	Designation	Meaning	
1	B	Track B/+SIN	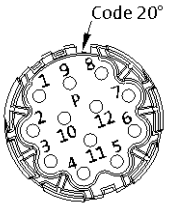
2	A^-	Track A inverse/-COS	
3	A	Track A/+COS	
4	$+U_B$	Supply +	
5	GND	Mass	
6	Z^-	Zero track inverse/-RS485	
7	Z	Zero track/+RS485	
8		Not assigned	
9	B^-	Track B inverse/-SIN	
10		Not assigned	
11	+KTY	KTY temperature sensor	
12	-KTY		



ICN connector

Feedback connection

► SinCos absolute value encoder with EnDat interface

Pin assignment			
Contact	Designation	Meaning	
1	U_P sensor	Supply: UP sensor	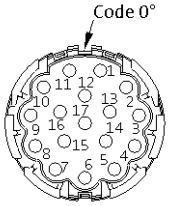
2		Not assigned	
3			
4	0 V sensor	Supply: 0 V sensor	
5	+KTY	KTY temperature sensor	
6	-KTY		
7	$+U_B$	Supply +	
8	Cycle	EnDat interface cycle	
9	Cycle$^-$	EnDat interface inverse cycle	
10	GND	Mass	
11	Shield	Encoder housing screen	
12	B	Track B	
13	B$^-$	Track B inverse/-SIN	
14	Data	EnDat interface data	
15	A	Track A	
16	A$^-$	Track A inverse	
17	Data$^-$	EnDat interface inverse data	

Blower connection

Pin assignment			
Contact	Designation	Meaning	
PE	PE	PE conductor	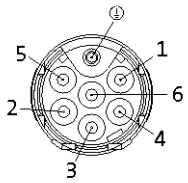
1	U1	Fan	
2	U2		
3		Not assigned	
4			
5			
6			







13462586

Lenze SE
Hans-Lenze-Straße 1
D-31855 Aerzen
Phone: +49 (0)5154 82-0
Telefax: +49 (0)5154 82 28 00

www.Lenze.com