L-force catalogue

Automation systems
Drive solutions

Controls
Inverter
Motors
Gearboxes
Engineering Tools

Motors: MCS synchronous servo motors

Gearboxes: g500-H helical gearboxes, g500-S shaft-mounted helical gearbox, g500-B bevel gearbox

Lenze
As easy as that.

Contents of the L-force catalogue

About Lenze		Lenze makes many things easy for you.	
		A matter of principle: the right products for every application.	
		L-force product portfolio	
Automation systems		Controller-based Automation	1.1
		Drive-based automation	1.2
Drive solutions		HighLine tasks	2.1
		StateLine tasks	2.2
		BaseLine tasks	2.3
Controls	Cabinet Controllers	Controller 3200 C	3.1
		Controller c300	3.2
	Panel Controllers	Controller p500	3.3
		Controller p300	3.4
	'	I/O System 1000	3.5
		Monitor Panel	3.6
Inverter	Decentralised	Inverter Drives 8400 protec	4.1
		Inverter Drives 8400 motec	4.2
	Cabinet	Servo Drives 9400 HighLine	4.4
		Inverter Drives 8400 TopLine	4.5
		Servo-Inverter i700	4.6
		Inverter Drives 8400 HighLine	4.7
		Inverter Drives 8400 StateLine	4.8
		Inverter Drives 8400 BaseLine	4.10
Motors	Servo motors	MCS synchronous servo motors	5.1
		MD□KS synchronous servo motors	5.2
		MQA asynchronous servo motors	5.3
		MCA asynchronous servo motors	5.4
	Three-phase AC motors	Inverter opt. three-phase AC motors MF	5.5
		IE2 MH three-phase AC motors	5.6
		IE1 MD three-phase AC motors	5.7
		Lenze Smart Motor m300	5.8
		IE1/2 three-phase AC motors Basic MD/MH	5.9
Gearboxes	Axial gearboxes	g700-P planetary gearbox	6.1
		MPR/MPG planetary gearboxes	6.2
		g500-H helical gearboxes	6.3
		GST helical gearboxes	6.4
		g500-S shaft-mounted helical gearbox	6.5
		GFL shaft-mounted helical gearbox	6.6
	Right-angle gearboxes	g500-B bevel gearbox	6.7
		GKR bevel gearboxes	6.8
		GKS helical-bevel gearbox	6.9
		GSS helical-worm gearboxes	6.10
	Motor data	Assignment see above	6.11
Engineering Tools		Navigator	7.1
		Drive Solution Designer	7.2
		Drive Solution Catalogue	7.3
		Engineer	7.4
		PLC Designer	7.5
		VisiWinNET®	7.6
		EASY Starter	7.7

Selected portfolio

Additional portfolio

Lenze makes many things easy for you.

With our motivated and committed approach, we work together with you to create the best possible solution and set your ideas in motion - whether you are looking to optimise an existing machine or develop a new one. We always strive to make things easy and seek perfection therein. This is anchored in our thinking, in our services and in every detail of our products. It's as easy as that!

1

Developing ideas

Are you looking to build the best machine possible and already have some initial ideas? Then get these down on paper together with us, starting with small innovative details and stretching all the way to completely new machines. Working together, we will develop an intelligent and sustainable concept that is perfectly aligned with your specific requirements.

2

Drafting concepts

We see welcome challenges in your machine tasks, supporting you with our comprehensive expertise and providing valuable impetus for your innovations. We take a holistic view of the individual motion and control functions here and draw up consistent, end-to-end drive and automation solutions for you - keeping everything as easy as possible and as extensive as necessary.

3

Implementing solutions

Our easy formula for satisfied customers is to establish an active partnership with fast decision making processes and an individually tailored offer. We have been using this principle to meet the ever more specialised customer requirements in the field of machine engineering for many years.

4

Manufacturing machines

Functional diversity in perfect harmony: as one of the few full-range providers in the market, we can provide you with precisely those products that you actually need for any machine task – no more and no less. Our L-force product portfolio, a consistent platform for implementing drive and automation tasks, is invaluable in this regard.

5

Ensuring productivity

Productivity, reliability and new performance peaks on a daily basis – these are our key success factors for your machine. After delivery, we offer you cleverly devised service concepts to ensure continued safe operation. The primary focus here is on technical support, based on the excellent application expertise of our highly-skilled and knowledgeable after-sales team.

A matter of principle: the right products for every application.

Lenze's extensive L-force product portfolio follows a very simple principle. The functions of our finely scaled products are assigned to the three lines Base-Line, State-Line or High-Line.

But what does this mean for you? It allows you to quickly recognise which products represent the best solution for your own specific requirements.

Powerful products with a major impact:
- Easy handling
- High quality and durability
- Reliable technologies in tune with the latest developments

Lenze products undergo the most stringent testing in our own laboratory. This allows us to ensure that you will receive consistently high quality and a long service life. In addition to this, five logistics centres ensure that the Lenze products you select are available for quick delivery anywhere across the globe. It's as easy as that!

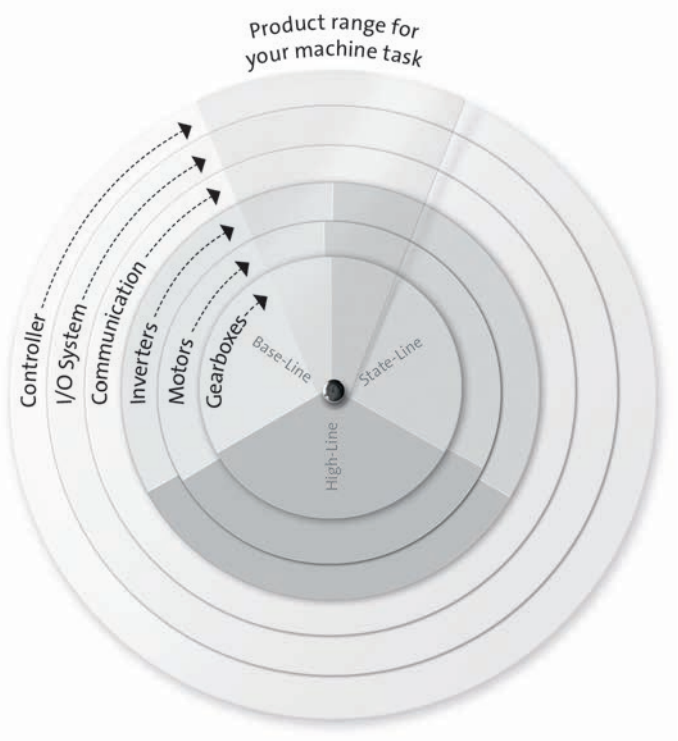

L-force product portfolio

Controls

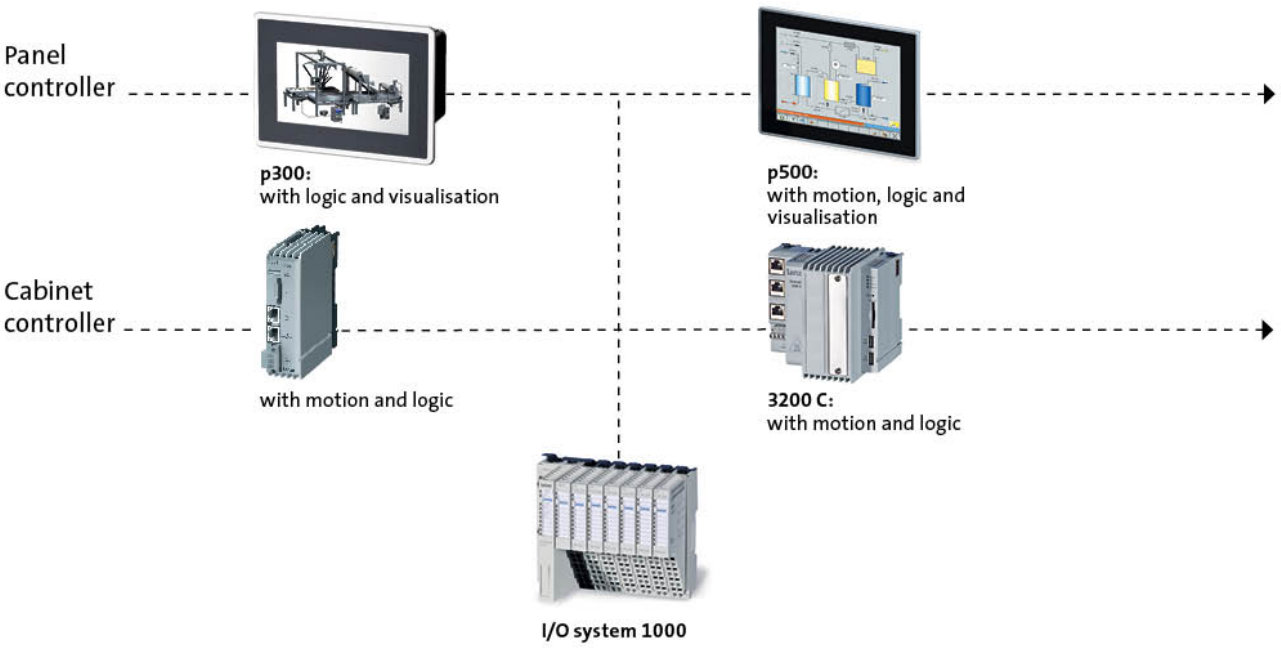

Engineering Tools

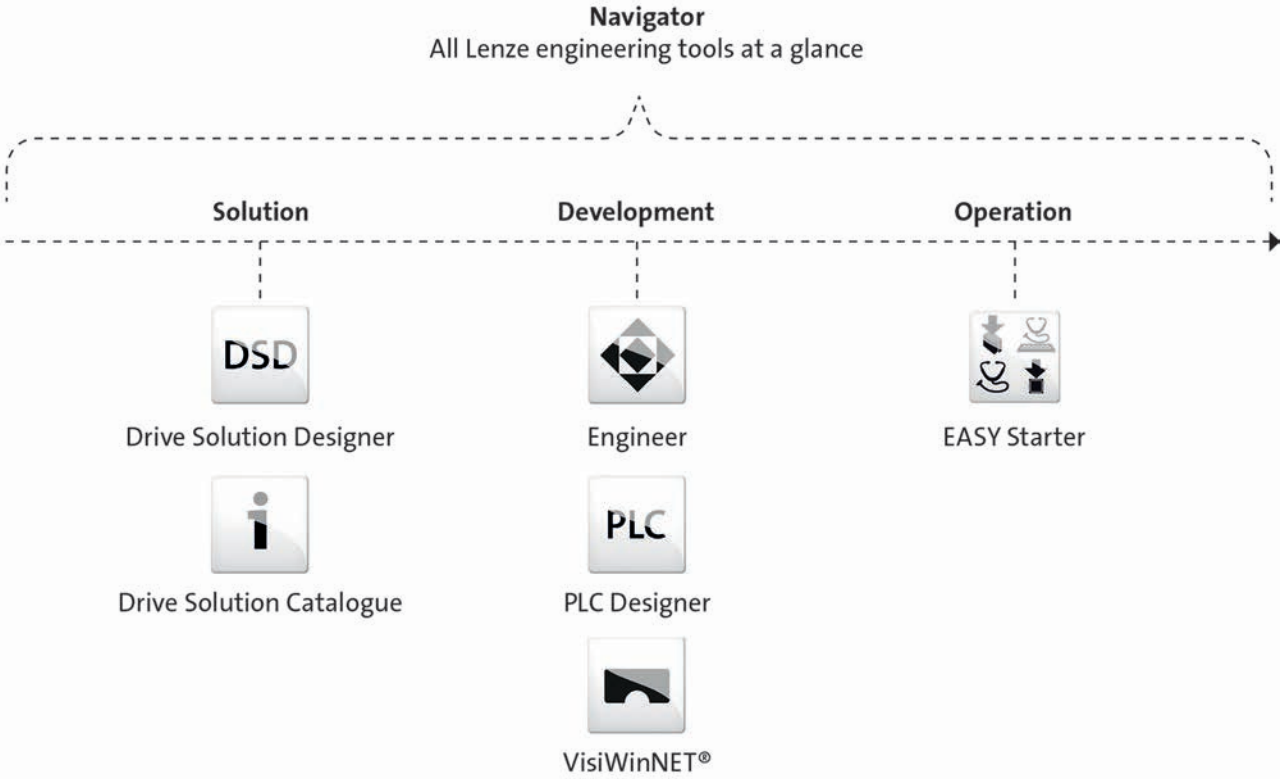

L-force product portfolio

Inverter

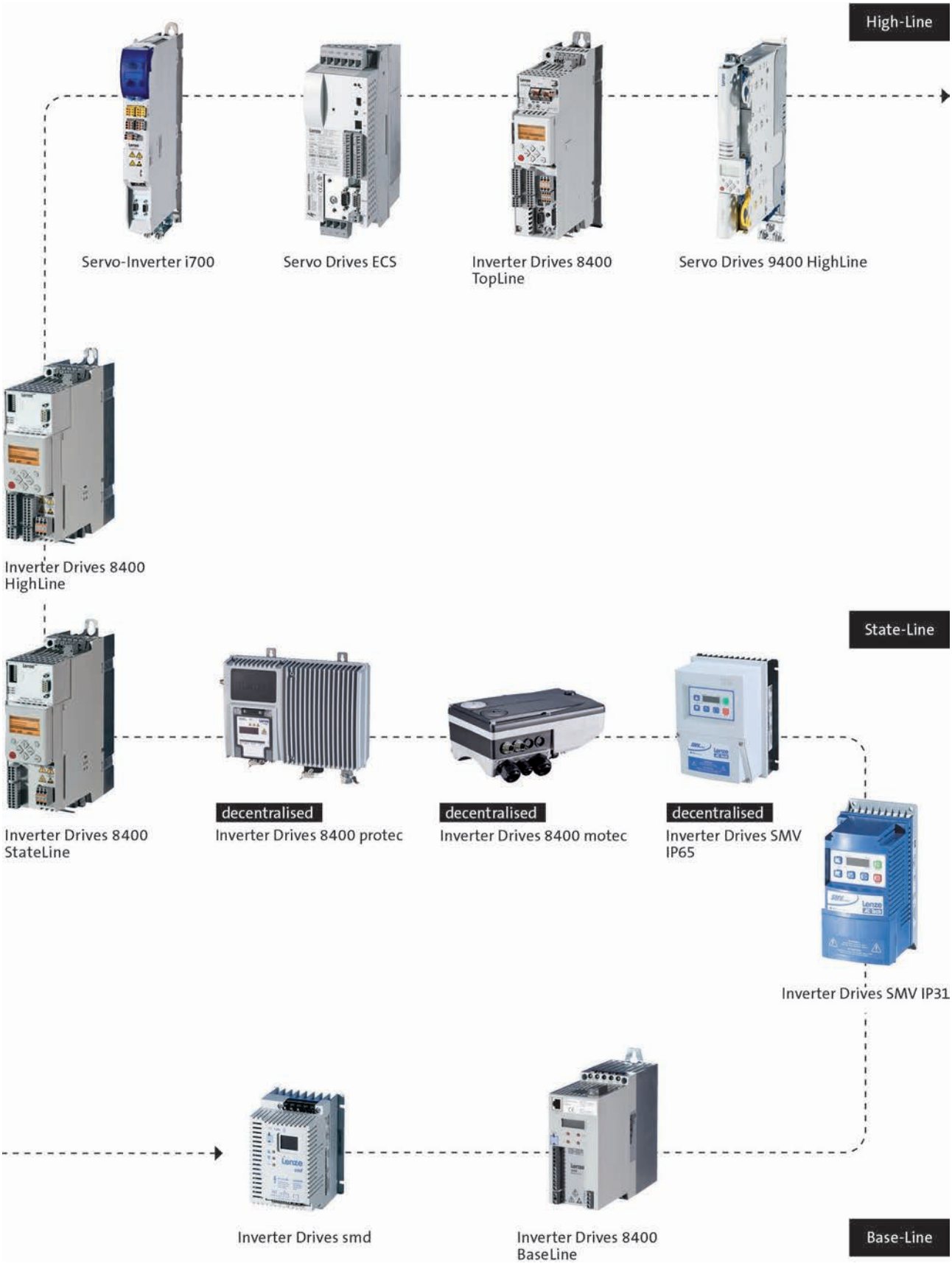

L-force product portfolio

Motors

High-Line

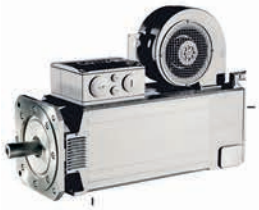

MQA asynchronous servo motors



SDSGS synchronous servo motors



MDXKS synchronous servo motors



Synchronous servo motors MCS



Asynchronous servo motors MCA



Asynchronous servo motors SDSGA

State-Line



MF three-phase AC motors



MH three-phase AC motors



MD three-phase AC motors



Basic MD/MH three-phase AC motors

Base-Line

L-force product portfolio

Gearboxes

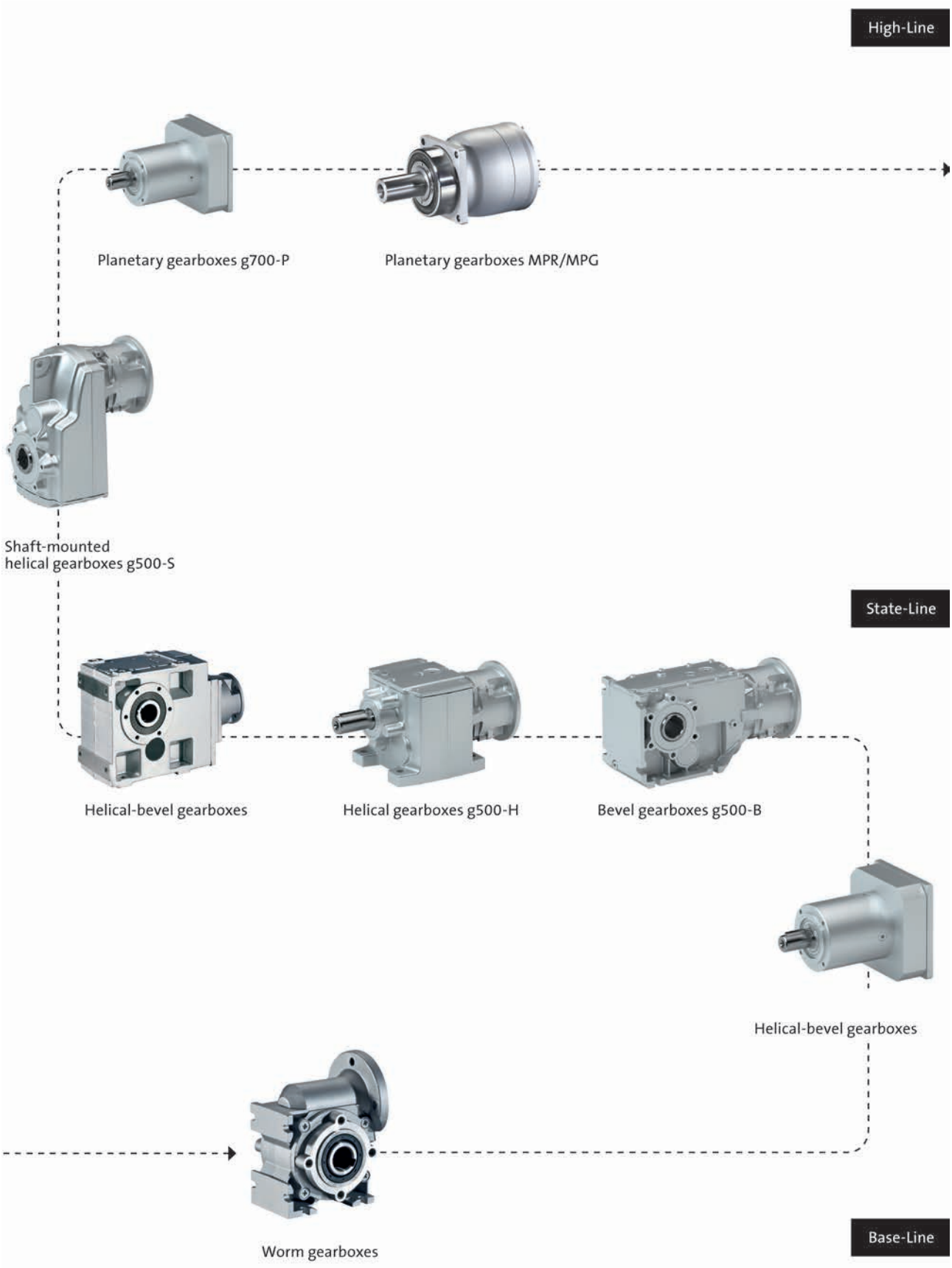

g500-H helical geared motors

3 ... 440 Nm (synchronous servo motors)

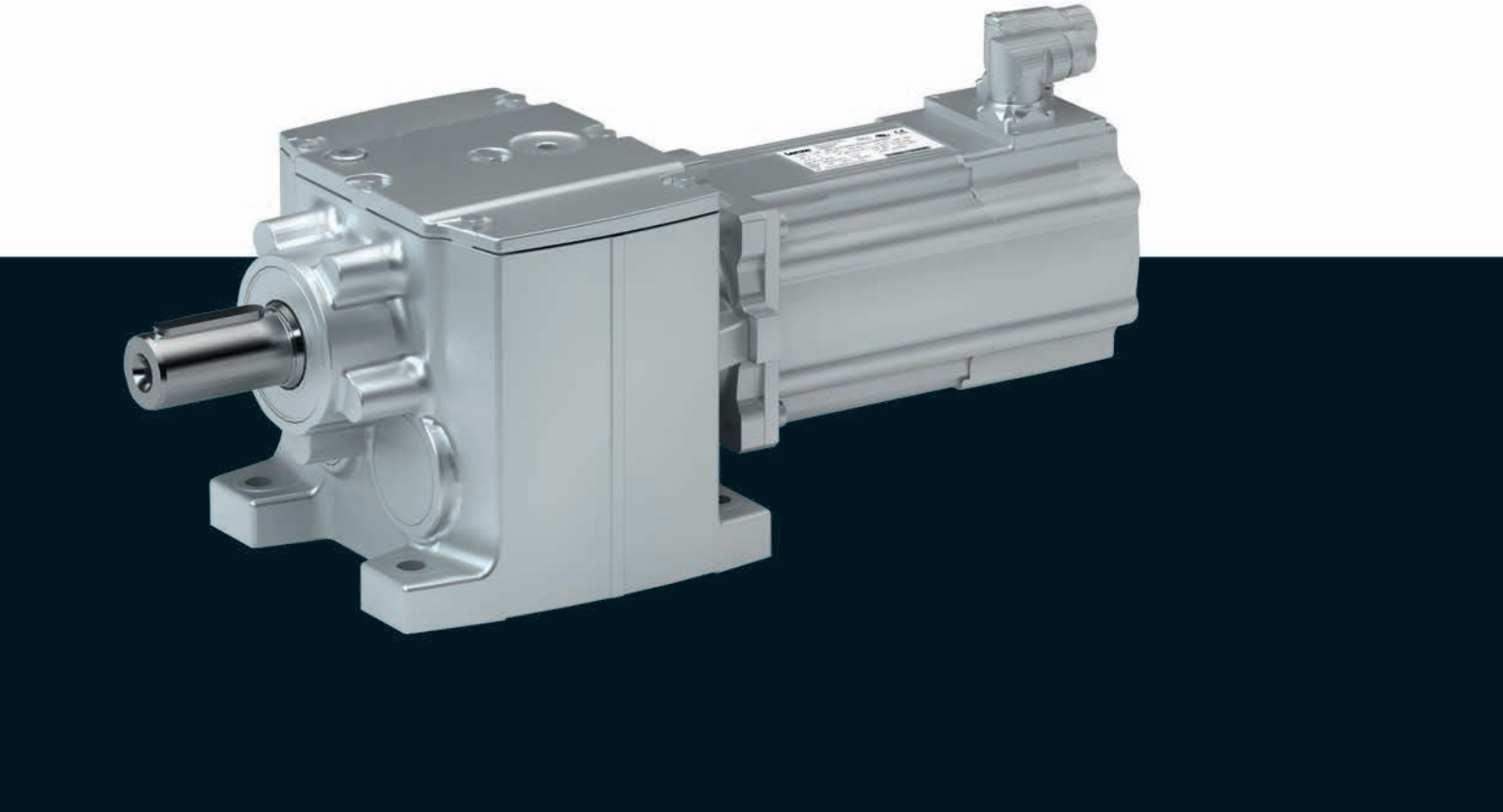

g500-H helical geared motors

Contents



General information	List of abbreviations	6.3 - 5
	Product information	6.3 - 6
	Equipment	6.3 - 7
	The gearbox kit	6.3 - 8
	Dimensioning	6.3 - 14
Technical data	Selection tables, notes	6.3 - 19
	Selection tables	6.3 - 20
	Dimensions, notes	6.3 - 37
	Dimensions, self-ventilated motors	6.3 - 38
	Weights, self-ventilated motors	6.3 - 65
	Surface and corrosion protection	6.3 - 66

g500-H helical geared motors

Contents





List of abbreviations

c		Load capacity
i		Ratio
J	[kgcm²]	Moment of inertia
m	[kg]	Mass
M_2	[Nm]	Output torque
$M_{2, max}$	[Nm]	Max. output torque
$n_{2, eto}$	[r/min]	Transition speed
$n_{2, th}$	[r/min]	Thermal limit speed

CCC	China Compulsory Certificate
CE	Communauté Européenne
CSA	Canadian Standards Association
cURus	Combined certification marks of UL for the USA and Canada
DIN	Deutsches Institut für Normung e.V.
EMC	Electromagnetic compatibility
EN	European standard
GOST	Certificate for Russian Federation
IEC	International Electrotechnical Commission
IM	International Mounting Code
IP	International Protection Code
NEMA	National Electrical Manufacturers Association
UL	Underwriters Laboratory Listed Product
UR	Underwriters Laboratory Recognized Product
VDE	Verband deutscher Elektrotechniker (Association of German Electrical Engineers)



Product information

In combination with servo motors, our helical gearboxes form a compact and powerful drive unit. Numerous options at the input and output end provide for the drive to be exactly adapted to your application.

The robust helical gearboxes feature high permissible radial forces, closely stepped ratios and a low backlash. They are available in 2-pole and 3-pole design with a torque up to 450 Nm and a ratio of up to i= 370.

Versions

- Fine-scaling of size / torque provides for an optimum machine adaptation
- Standardised shaft and flange dimensions for an easy machine integration
- High efficiency
- With MCS synchronous servo motors, rated torque: 0.5 Nm ... 72 Nm

The product name

Gearbox type	Product range		Design	Rated torque [Nm]	Product
Helical gearbox	g500	-	H	45	g500-H45
				100	g500-H100
				140	g500-H140
				210	g500-H210
				320	g500-H320
				450	g500-H450



Equipment

Overview

The equipment includes all the options available as standard and all the built-on accessories of the product.

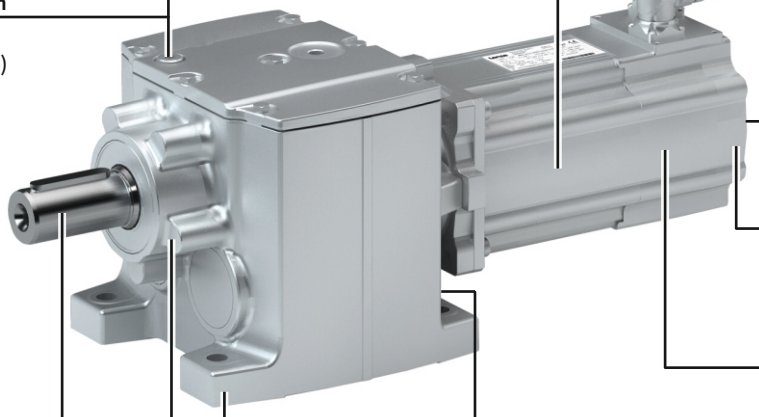

6.3



The gearbox kit

Geared motor

Product	g500-H45	g500-H100	g500-H140	g500-H210	g500-H320	g500-H450
Motor type	Synchronous servo motor					
Servo motor						
0.6 - 1.5 Nm	MCS06					
2.3 - 4.5 Nm		MCS09				
5.5 - 17 Nm				MCS12		
9.2 - 42 Nm					MCS14	
Technical data						
Output torque	See selection table					
Output speed	See selection table					
Ratio	See selection table					
Load capacity	See selection table					
Moment of inertia	See selection table					
Mounting position						
Standard	A/B/C/D/E/F					
Combined	ABCDEF	AEF				
Colour	Not coated Primed Paint in various corrosion-protection designs in accordance with RAL colours					
Surface and corrosion protection	Without OKS(uncoated) OKS-G (primed) OKS-S (small) OKS-M (medium) OKS-L (large)					



The gearbox kit

Mounting positions

► Mounting position (A to F) and position of system blocks (1 to 6)

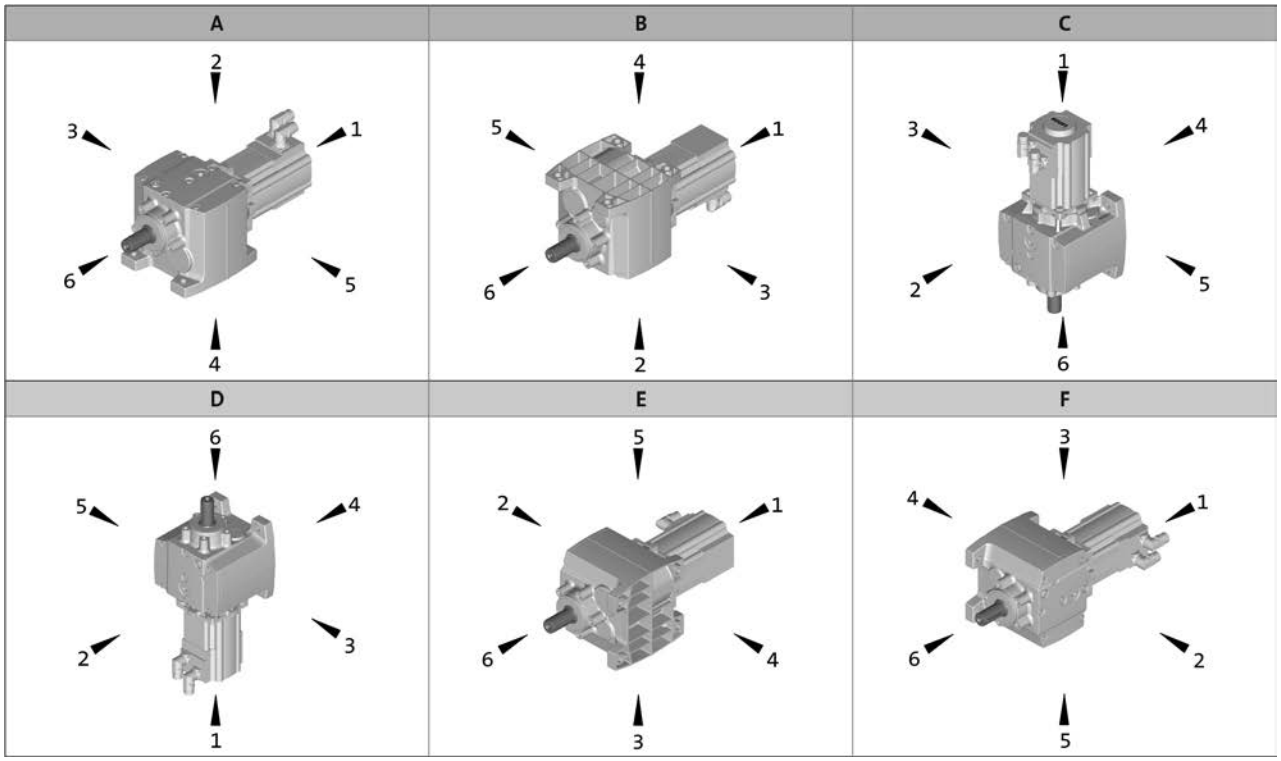

Connector / terminal box: 2, 3, 4, 5



The gearbox kit

Motor details

Product	MCS			
	06C41 06F41 06I41	09D41 09L41 09F38 09H41	12D20 12D41 12H15 12H30 12H35 12L20 12L41	14D15 14D36 14H15 14H32 14L15 14L32 14P14 14P32
Connection type	Plug connectors	Plug connectors Terminal box		
Permanent magnet holding brake				
Rated torque [Nm]	2.2	8.0	12	22
Brake voltage [V]	DC 24			
Feedback	With absolute value encoder With incremental encoder With resolver			
Cooling	Self-ventilated			
Temperature monitoring	KTY83-110 thermal detector	KTY83-110 thermal detector PTC thermistor		
Approval	cURus GOST_R UkrSepro			
Enclosure	IP54 IP65			

► Further information and installation feasibilities can be found in the Motors chapter.



The gearbox kit

Motor details

Connection type
 Plug connectors  Terminal box

Cooling: self-ventilated
 With resolver  With permanent magnet brake  With feedback With feedback and permanent magnet brake



The gearbox kit

Gearbox details

Product	g500-H45	g500-H100	g500-H140	g500-H210	g500-H320	g500-H450
Driven shaft						
Solid shaft without keyway [mm]		20x40	25x50		30x60	35x70
Solid shaft with featherkey [mm]	14x28 20x40	20x40	25x50		30x60	30x60 35x70
Design	Standard stainless steel					
Gasket	Standard FPM (Viton)					
Bearing	Standard	Standard Reinforced				
Fitting grease	Not enclosed Enclosed					
Housing						
Housing version	With foot Without foot with centering	With foot With foot and centering Without foot with centering				
Output flange						
flange diameter [mm]	120/140/160			120/140/160/200	160/200	160/200/250
Lubricant						
Type	CLP 460 [1)] CLP HC 320 CLP HC 220 CLP HC 220 USDA H1					
Oil-level inspection	Without inspection With inspection					
Breather element	Without				Standard mounting position: Mounted Combined mounting position: loosely enclosed	
Backlash						
Backlash	Standard					

[1)] Not suitable for geared servo motors.

► Further information and installation feasibilities can be found in the Gearboxes chapter.



The gearbox kit

Gearbox details

Solid shaft		
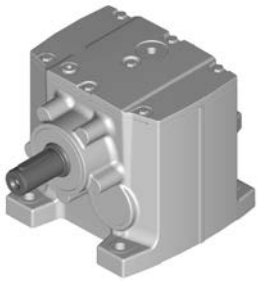 Foot mounting	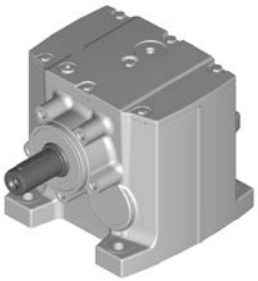 Foot mounting With centering	 Foot mounting Flange with through holes

Solid shaft	
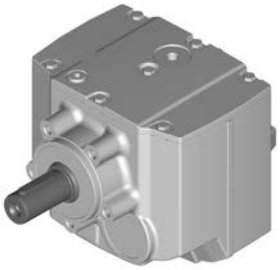 With centering	 Flange with through holes



Dimensioning

General information about the data provided in this catalogue

The powers, torques and speeds specified in this catalogue are rounded values and are valid under the following conditions:

- Operating time/day = 8 h (100% OT)
- Duty class I for up to 10 switching operations/h
- Mounting positions and designs in this catalogue
- Standard lubricant
- T_{amb} = 20 °C for gearboxes,
  T_{amb} = 40 °C for motors (in accordance with EN 60034)
- Site altitude < = 1000 m amsl
- The selection tables provide the permissible mechanical powers and torques. For notes on the thermal power limit, see chapter drive dimensioning.
- The rated power specified for motors and geared motors applies to operating mode S1 (in accordance with EN 60034).

Under different operating conditions, the values obtained may vary from those listed here.
In the case of extreme operating conditions, please consult your Lenze sales office.



Dimensioning

Thermal power limit

The thermal power limit, defined by the heat balance, limits the permissible gearbox continuous power. It may be less than the mechanical power ratings listed in the selection tables.

The thermal power limit is affected by:
- the churning losses in the lubricant. These are determined by the mounting position and the circumferential speed of the gears;
- the load and the speed
- the ambient conditions: temperature, air circulation, input or dissipation via shafts and the foundation

If the following input speeds n_1 are exceeded, please contact Lenze:

Motor frame size	Mounting position A, B, E, F	Mounting position C, D
MCS06 to 12	4000 r/min	3000 r/min
MCS14	3000 r/min	1500 r/min

► For a short period of time up to 5 min, 30 % higher speeds are permissible

Possible ways of extending the application area

- Shaft sealing rings made from FP material/Viton (option)
- Reduction in lubricant quantity
- Cooling of the geared motor by means of air convection on the machine/system



Dimensioning

Load capacity and application factor

Load capacity c of gearbox
Rated value for the load capacity of Lenze geared motors.
- c is the ratio of the permissible rated torque of the gearbox to the rated torque supplied by the drive component (e.g. the built-in Lenze motor).
- The value of c must always be greater than the value of the application factor k calculated for the application.

Application factor k (according to DIN 3990)
Takes into account the influence of temporally variable loads which are actually present during the anticipated operating time of gearboxes and geared motors.
k is determined by:
- the type of load
- the load intensity
- temporal influences

Duty class	Load type
I	Smooth operation, small or light jolts
II	Uneven operation, average jolts
III	Uneven operation, severe jolts and/or alternating load

Application factor k

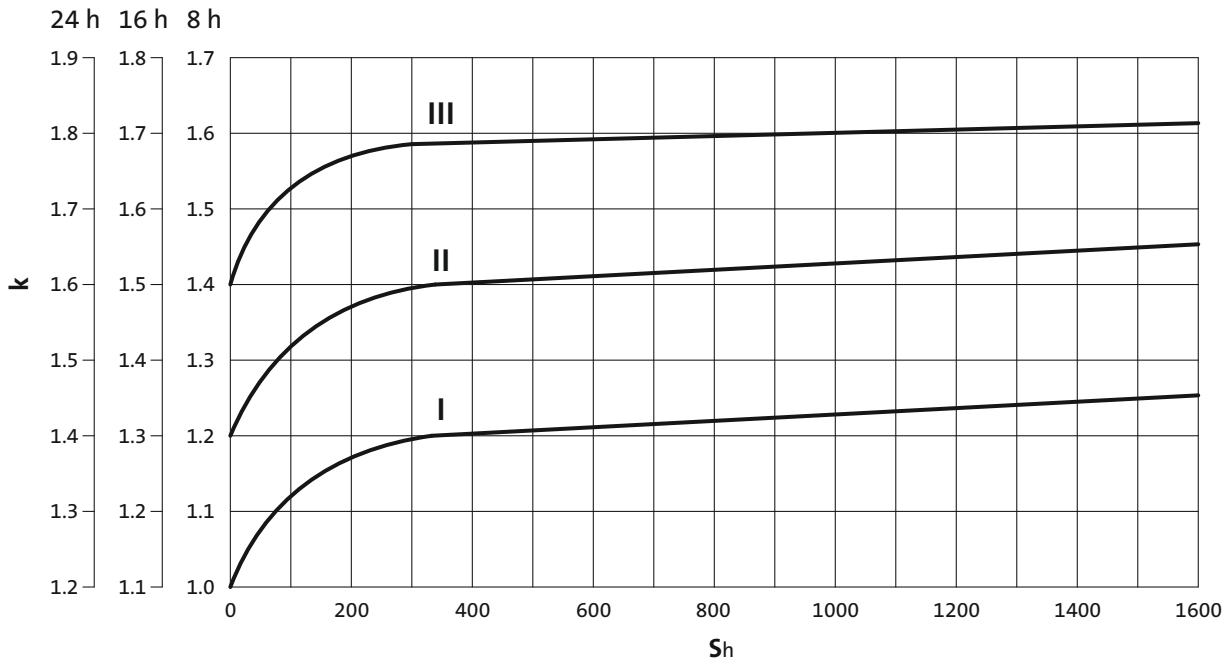

► S_h= switchings/h



Dimensioning

Weights

The values given in the tables consider the following gearbox/motor combination:
- Gearbox with solid shaft including lubricant amount
- Motor with feedback

For versions deviating from this, additional weights have to be considered.

The respective values can be found for:
- Geared motors with feedback
  > Chapter: Geared motors/Technical data
- Motor options: Brake
  > Chapter: Motors/Accessories

Moments of inertia

The given moments of inertia of the gearbox refer to the drive shaft. The influence of the ratio (i^2) has been considered in the data.

When the total moment of inertia of the geared motor is calculated, the values of the geared motors and the brake have to be added.

The respective values can be found for:
- Geared motors with feedback
  > Chapter: Geared motors/Technical data/Selection tables
- Motor options: Brake
  > Chapter: Motors/Accessories





Selection tables, notes

Notes on the selection tables

The selection tables show the available combinations of gearbox type, number of stages, ratio and motor. They are used only to provide basic orientation.
The following legend indicates the structure of the selection tables.

Number of the gear stage of the gearbox

2-stage gearboxes

Inverter operation						i	Product		Cooling	
$M_{2,max}$ [Nm]	$n_{2,th}$ [r/min]	M_2 [Nm]	$n_{2,eto}$ [r/min]	c	J [kgcm²]		g500	MCS		
23	1559	3	1559	4.3	0.500	2.597	-H45	06F41	Selbst	34
23	1559	4	1559	3.4	0.600	2.597	-H45	06I41	Selbst	34
24	1187	4	1187	3.4	0.400	3.413	-H45	06F41	Selbst	34
24	1187	5	1187	2.8	0.500	3.413	-H45	06I41	Selbst	34

For operating mode S1
Torque **M_2** and
thermal output speed **$n_{2,th}$**

For operating mode S2,S3 und S6
Max. permissible acceleration torque of geared motor **$M_{2,max}$** and
output speed **$n_{2,eto}$**

Moment of inertia of geared motor

Ratio i

Product Gearbox

Product Motor

Type of motor cooling

Page number for dimensions

Load capacity of the gearbox
c is the ratio between the permissible rated torque of the gearbox and the rated torque of the three-phase AC motor (converted to the driven shaft).
c must be always higher than the service factor **k** determined for the application **k**.

$$c = \frac{M_{2,zul}}{M_{1,N} \cdot i \cdot \eta_{Getr}} > k$$



Selection tables

2-stage gearboxes

Umrichterbetrieb						i	Produkt		Kühlung	
$M_{2, max}$ [Nm]	$n_{2, th}$ [r/min]	M_2 [Nm]	$n_{2, eto}$ [r/min]	c	J [kgcm²]		g500	MCS		
10	927	3	927	5.9	0.300	4.368	-H45	06C41	natural	38
11	1559	3	1559	4.3	0.500	2.597	-H45	06F41	natural	38
14	679	3	679	6.0	0.300	5.965	-H45	06C41	natural	38
15	1187	4	1187	3.4	0.400	3.413	-H45	06F41	natural	38
16	1559	4	1559	3.4	0.600	2.597	-H45	06I41	natural	38
16	580	4	580	5.3	0.300	6.982	-H45	06C41	natural	38
18	517	5	517	5.0	0.300	7.840	-H45	06C41	natural	38
19	1187	5	1187	2.8	0.500	3.413	-H45	06I41	natural	38
19	927	5	927	3.0	0.300	4.368	-H45	06F41	natural	38
21	927	6	927	2.4	0.400	4.368	-H45	06I41	natural	38
21	453	5	453	4.6	0.200	8.935	-H45	06C41	natural	38
23	762	6	762	3.1	0.400	5.312	-H45	06F41	natural	38
23	404	6	404	4.3	0.200	10.033	-H45	06C41	natural	38
25	679	7	679	3.0	0.400	5.965	-H45	06F41	natural	38
27	354	7	354	3.8	0.200	11.429	-H45	06C41	natural	38
30	580	8	580	2.6	0.300	6.982	-H45	06F41	natural	38
30	580	10	580	2.1	0.400	6.982	-H45	06I41	natural	38
30	316	7	316	3.6	0.200	12.833	-H45	06C41	natural	38
32	517	9	517	2.5	0.300	7.840	-H45	06F41	natural	38
32	517	11	517	2.0	0.400	7.840	-H45	06I41	natural	38
33	453	10	453	2.3	0.300	8.935	-H45	06F41	natural	38
33	453	13	453	1.8	0.400	8.935	-H45	06I41	natural	38
35	404	12	404	2.1	0.300	10.033	-H45	06F41	natural	38
35	404	15	404	1.7	0.400	10.033	-H45	06I41	natural	38
35	354	13	354	1.9	0.300	11.429	-H45	06F41	natural	38
35	354	17	354	1.5	0.400	11.429	-H45	06I41	natural	38
35	273	9	273	3.2	0.200	14.836	-H45	06C41	natural	38
38	316	15	316	1.8	0.300	12.833	-H45	06F41	natural	38
38	316	19	316	1.5	0.400	12.833	-H45	06I41	natural	38
39	273	17	273	1.6	0.300	14.836	-H45	06F41	natural	38
39	273	22	273	1.3	0.300	14.836	-H45	06I41	natural	38
39	243	10	243	3.5	0.200	16.660	-H45	06C41	natural	38
41	243	19	243	1.7	0.300	16.660	-H45	06F41	natural	38
41	243	24	243	1.4	0.300	16.660	-H45	06I41	natural	38
42	213	11	213	3.1	0.200	19.013	-H45	06C41	natural	38
42	213	22	213	1.6	0.200	19.013	-H45	06F41	natural	38
42	213	28	213	1.2	0.300	19.013	-H45	06I41	natural	38
43	572	10	572	6.0	0.600	7.086	-H100	06I41	natural	41
43	403	12	403	5.6	0.300	10.063	-H100	06F41	natural	41
44	190	12	190	2.9	0.200	21.350	-H45	06C41	natural	38



Selection tables

2-stage gearboxes

Umrichterbetrieb						i	Produkt		Kühlung	
$M_{2, max}$ [Nm]	$n_{2, th}$ [r/min]	M_2 [Nm]	$n_{2, eto}$ [r/min]	c	J [kgcm²]		g500	MCS		
44	190	25	190	1.4	0.200	21.350	-H45	06F41	natural	38
44	190	31	190	1.2	0.300	21.350	-H45	06I41	natural	38
45	165	14	165	2.6	0.200	24.595	-H45	06C41	natural	38
45	165	29	165	1.3	0.200	24.595	-H45	06F41	natural	38
45	165	36	165	1.0	0.300	24.595	-H45	06I41	natural	38
45	147	16	147	2.3	0.200	27.618	-H45	06C41	natural	38
45	147	32	147	1.1	0.200	27.618	-H45	06F41	natural	38
45	127	19	127	2.0	0.200	32.000	-H45	06C41	natural	38
45	113	21	113	1.8	0.200	35.933	-H45	06C41	natural	38
48	357	13	357	5.4	0.400	11.360	-H100	06F41	natural	41
49	493	12	493	5.2	0.400	8.214	-H100	06I41	natural	41
52	182	13	182	5.5	0.200	22.314	-H100	06C41	natural	41
54	688	13	688	4.4	1.300	5.887	-H100	09D41	natural	41
54	320	15	320	4.9	0.400	12.653	-H100	06F41	natural	41
55	447	13	447	5.2	0.500	9.068	-H100	06I41	natural	41
58	161	15	161	4.9	0.200	25.095	-H100	06C41	natural	41
59	629	14	629	4.2	1.300	6.440	-H100	09D41	natural	41
59	413	14	413	4.5	0.500	9.800	-H140	06I41	natural	44
61	403	15	403	4.5	0.400	10.063	-H100	06I41	natural	41
62	280	17	280	4.3	0.300	14.490	-H100	06F41	natural	41
66	261	18	261	4.0	0.300	15.500	-H100	06F41	natural	41
67	815	14	815	3.8	1.800	4.600	-H100	09F38	natural	41
67	141	17	141	4.9	0.200	28.738	-H100	06C41	natural	41
68	357	17	357	4.3	0.500	11.360	-H100	06I41	natural	41
76	493	18	493	3.6	1.200	8.214	-H100	09D41	natural	41
76	320	18	320	3.9	0.400	12.653	-H100	06I41	natural	41
76	228	21	228	3.5	0.300	17.750	-H100	06F41	natural	41
81	688	22	688	2.7	2.100	5.887	-H100	09H41	natural	41
81	688	26	688	2.3	3.000	5.887	-H100	09L41	natural	41
81	637	18	637	3.4	1.700	5.887	-H100	09F38	natural	41
81	420	25	420	5.3	5.000	4.648	-H210	12D20	natural	47
82	115	21	115	5.6	0.200	35.308	-H140	06C41	natural	44
83	654	17	654	4.4	1.900	5.733	-H140	09F38	natural	44
83	629	24	629	2.5	2.100	6.440	-H100	09H41	natural	41
83	629	28	629	2.1	3.000	6.440	-H100	09L41	natural	41
83	582	19	582	3.2	1.700	6.440	-H100	09F38	natural	41
83	208	23	208	3.2	0.300	19.486	-H100	06F41	natural	41
84	447	20	447	3.4	1.300	9.068	-H100	09D41	natural	41
84	205	23	205	4.4	0.300	19.750	-H140	06F41	natural	44
87	280	21	280	3.4	0.400	14.490	-H100	06I41	natural	41



Selection tables

2-stage gearboxes

Umrichterbetrieb						i	Produkt		Kühlung	
$M_{2, max}$ [Nm]	$n_{2, th}$ [r/min]	M_2 [Nm]	$n_{2, eto}$ [r/min]	c	J [kgcm²]		g500	MCS		
90	413	22	413	4.1	1.300	9.800	-H140	09D41	natural	44
91	598	19	598	4.1	1.800	6.272	-H140	09F38	natural	44
92	493	30	493	2.2	2.000	8.214	-H100	09H41	natural	41
92	493	36	493	1.8	2.900	8.214	-H100	09L41	natural	41
92	457	25	457	2.7	1.600	8.214	-H100	09F38	natural	41
93	403	22	403	3.2	1.200	10.063	-H100	09D41	natural	41
93	261	23	261	3.2	0.400	15.500	-H100	06I41	natural	41
93	186	25	186	4.0	0.300	21.808	-H140	06F41	natural	44
95	443	30	443	5.5	9.300	3.389	-H320	14D15	natural	53
95	443	33	443	3.8	8.800	3.389	-H210	12H15	natural	47
95	182	26	182	2.8	0.300	22.314	-H100	06F41	natural	41
96	414	27	414	2.6	1.700	9.068	-H100	09F38	natural	41
97	251	23	251	4.3	0.500	16.122	-H140	06I41	natural	44
98	349	30	349	4.9	5.200	5.583	-H210	12D20	natural	47
99	403	37	403	1.9	2.000	10.063	-H100	09H41	natural	41
99	403	44	403	1.6	2.900	10.063	-H100	09L41	natural	41
99	373	30	373	2.4	1.600	10.063	-H100	09F38	natural	41
100	357	25	357	2.8	1.300	11.360	-H100	09D41	natural	41
100	330	34	330	2.2	1.700	11.360	-H100	09F38	natural	41
100	320	28	320	2.5	1.200	12.653	-H100	09D41	natural	41
100	320	47	320	1.5	2.000	12.653	-H100	09H41	natural	41
100	296	38	296	1.9	1.600	12.653	-H100	09F38	natural	41
100	280	32	280	2.2	1.200	14.490	-H100	09D41	natural	41
100	261	35	261	2.1	1.200	15.500	-H100	09D41	natural	41
100	261	57	261	1.3	2.000	15.500	-H100	09H41	natural	41
100	261	68	261	1.1	2.900	15.500	-H100	09L41	natural	41
100	259	44	259	1.7	1.600	14.490	-H100	09F38	natural	41
100	242	47	242	1.6	1.600	15.500	-H100	09F38	natural	41
100	228	26	228	2.8	0.400	17.750	-H100	06I41	natural	41
100	228	40	228	1.8	1.200	17.750	-H100	09D41	natural	41
100	228	65	228	1.1	2.000	17.750	-H100	09H41	natural	41
100	211	53	211	1.4	1.600	17.750	-H100	09F38	natural	41
100	208	28	208	2.5	0.400	19.486	-H100	06I41	natural	41
100	182	32	182	2.2	0.400	22.314	-H100	06I41	natural	41
100	161	29	161	2.5	0.300	25.095	-H100	06F41	natural	41
100	161	37	161	2.0	0.300	25.095	-H100	06I41	natural	41
100	141	33	141	2.4	0.300	28.738	-H100	06F41	natural	41
100	141	42	141	1.9	0.300	28.738	-H100	06I41	natural	41
103	706	21	706	3.5	2.300	5.733	-H140	09H41	natural	44
103	706	25	706	3.0	3.200	5.733	-H140	09L41	natural	44



Selection tables

2-stage gearboxes

Umrichterbetrieb						i	Produkt		Kühlung	
$M_{2, max}$ [Nm]	$n_{2, th}$ [r/min]	M_2 [Nm]	$n_{2, eto}$ [r/min]	c	J [kgcm²]		g500	MCS		
105	646	23	646	3.3	2.200	6.272	-H140	09H41	natural	44
105	646	27	646	2.8	3.100	6.272	-H140	09L41	natural	44
106	351	26	351	3.6	1.300	11.554	-H140	09D41	natural	44
106	163	29	163	3.5	0.300	24.829	-H140	06F41	natural	44
107	228	26	228	3.9	0.400	17.802	-H140	06I41	natural	44
109	312	33	312	4.3	5.200	6.250	-H210	12D20	natural	47
116	469	24	469	3.6	1.700	8.000	-H140	09F38	natural	44
117	506	29	506	2.9	2.100	8.000	-H140	09H41	natural	44
117	506	35	506	2.4	3.000	8.000	-H140	09L41	natural	44
117	320	28	320	3.4	1.300	12.640	-H140	09D41	natural	44
117	148	32	148	3.6	0.300	27.415	-H140	06F41	natural	44
119	205	29	205	3.5	0.400	19.750	-H140	06I41	natural	44
121	282	37	282	5.4	5.500	6.910	-H320	12D20	natural	53
125	413	36	413	2.5	2.100	9.800	-H140	09H41	natural	44
125	413	43	413	2.1	3.000	9.800	-H140	09L41	natural	44
125	383	29	383	3.1	1.700	9.800	-H140	09F38	natural	44
126	575	44	575	2.6	12.000	3.389	-H210	12L20	natural	47
128	351	43	351	2.2	2.100	11.554	-H140	09H41	natural	44
128	325	35	325	2.7	1.700	11.554	-H140	09F38	natural	44
129	290	31	290	3.1	1.300	13.957	-H140	09D41	natural	44
131	646	36	646	3.1	8.300	4.648	-H210	12H30	natural	47
131	646	36	646	3.9	8.100	4.648	-H320	12H30	natural	53
131	323	41	323	4.6	8.900	4.648	-H320	14D15	natural	53
131	323	45	323	3.2	8.300	4.648	-H210	12H15	natural	47
131	323	45	323	3.9	8.100	4.648	-H320	12H15	natural	53
131	186	32	186	3.2	0.400	21.808	-H140	06I41	natural	44
132	320	47	320	2.0	2.100	12.640	-H140	09H41	natural	44
132	297	38	297	2.6	1.700	12.640	-H140	09F38	natural	44
134	255	41	255	3.9	4.800	7.657	-H210	12D20	natural	47
136	290	51	290	1.9	2.100	13.957	-H140	09H41	natural	44
136	269	42	269	2.4	1.700	13.957	-H140	09F38	natural	44
137	127	37	127	3.1	0.300	31.976	-H140	06F41	natural	44
140	251	36	251	2.8	1.300	16.122	-H140	09D41	natural	44
140	251	59	251	1.7	2.000	16.122	-H140	09H41	natural	44
140	251	70	251	1.4	3.000	16.122	-H140	09L41	natural	44
140	233	48	233	2.1	1.600	16.122	-H140	09F38	natural	44
140	228	40	228	2.5	1.200	17.802	-H140	09D41	natural	44
140	228	66	228	1.5	2.000	17.802	-H140	09H41	natural	44
140	211	54	211	1.9	1.600	17.802	-H140	09F38	natural	44
140	205	44	205	2.3	1.200	19.750	-H140	09D41	natural	44



Selection tables

2-stage gearboxes

Umrichterbetrieb						i	Produkt		Kühlung	
$M_{2, max}$ [Nm]	$n_{2, th}$ [r/min]	M_2 [Nm]	$n_{2, eto}$ [r/min]	c	J [kgcm²]		g500	MCS		
140	205	73	205	1.4	2.000	19.750	-H140	09H41	natural	44
140	205	86	205	1.2	2.900	19.750	-H140	09L41	natural	44
140	190	59	190	1.7	1.600	19.750	-H140	09F38	natural	44
140	186	49	186	2.1	1.200	21.808	-H140	09D41	natural	44
140	186	80	186	1.3	2.000	21.808	-H140	09H41	natural	44
140	186	95	186	1.1	2.900	21.808	-H140	09L41	natural	44
140	172	66	172	1.6	1.600	21.808	-H140	09F38	natural	44
140	163	36	163	2.8	0.400	24.829	-H140	06I41	natural	44
140	148	40	148	2.9	0.400	27.415	-H140	06I41	natural	44
140	127	47	127	2.5	0.400	31.976	-H140	06I41	natural	44
140	115	41	115	2.8	0.300	35.308	-H140	06F41	natural	44
140	115	51	115	2.2	0.400	35.308	-H140	06I41	natural	44
141	265	34	265	4.2	1.500	15.306	-H210	09D41	natural	47
143	420	61	420	2.1	12.000	4.648	-H210	12L20	natural	47
147	166	36	166	4.3	0.500	24.405	-H210	06I41	natural	47
150	228	46	228	3.4	4.800	8.571	-H210	12D20	natural	47
150	115	41	115	4.2	0.300	35.095	-H210	06F41	natural	47
153	575	44	575	3.1	12.000	3.389	-H320	12L20	natural	53
154	242	37	242	4.0	1.400	16.750	-H210	09D41	natural	47
156	350	32	350	4.3	2.000	10.720	-H210	09F38	natural	47
157	269	54	269	2.9	8.500	5.583	-H210	12H15	natural	47
158	312	82	312	1.8	12.000	6.250	-H210	12L20	natural	47
158	240	61	240	2.6	8.500	6.250	-H210	12H15	natural	47
159	349	73	349	2.0	12.000	5.583	-H210	12L20	natural	47
163	149	39	149	4.3	0.400	27.119	-H210	06I41	natural	47
163	106	45	106	4.3	0.300	38.238	-H320	06F41	natural	53
165	443	53	443	3.1	15.000	3.389	-H320	14H15	natural	53
165	443	76	443	2.2	25.000	3.389	-H320	14L15	natural	53
165	398	99	398	1.7	36.000	3.389	-H320	14P14	natural	53
166	206	51	206	4.3	5.000	9.477	-H320	12D20	natural	53
168	103	46	103	3.8	0.300	39.286	-H210	06F41	natural	47
170	496	47	496	4.0	9.500	6.045	-H450	12H30	natural	59
170	248	59	248	4.0	9.500	6.045	-H450	12H15	natural	59
171	247	54	247	4.2	9.800	6.083	-H320	14D15	natural	53
171	247	59	247	3.9	9.000	6.083	-H320	12H15	natural	53
171	228	112	228	1.4	11.000	8.571	-H210	12L20	natural	47
171	199	52	199	3.2	4.600	9.799	-H210	12D20	natural	47
171	175	83	175	2.1	8.100	8.571	-H210	12H15	natural	47
172	392	59	392	2.3	8.100	7.657	-H210	12H30	natural	47
172	255	100	255	1.6	11.000	7.657	-H210	12L20	natural	47



Selection tables

2-stage gearboxes

Umrichterbetrieb						i	Produkt		Kühlung	
$M_{2, max}$ [Nm]	$n_{2, th}$ [r/min]	M_2 [Nm]	$n_{2, eto}$ [r/min]	c	J [kgcm²]		g500	MCS		
172	196	74	196	2.3	8.100	7.657	-H210	12H15	natural	47
173	216	42	216	3.6	1.400	18.750	-H210	09D41	natural	47
175	420	61	420	2.6	11.000	4.648	-H320	12L20	natural	53
175	313	36	313	3.8	2.000	12.000	-H210	09F38	natural	47
178	137	43	137	4.3	0.500	29.548	-H320	06I41	natural	53
182	306	76	306	1.9	7.900	9.799	-H210	12H30	natural	47
182	199	128	199	1.3	11.000	9.799	-H210	12L20	natural	47
182	153	95	153	1.9	7.900	9.799	-H210	12H15	natural	47
182	95	50	95	3.3	0.300	42.593	-H210	06F41	natural	47
183	133	44	133	3.9	0.400	30.357	-H210	06I41	natural	47
183	95	62	95	2.7	0.400	42.593	-H210	06I41	natural	47
186	454	51	454	3.8	9.300	6.613	-H450	12H30	natural	59
186	250	93	250	1.6	7.800	12.000	-H210	12H30	natural	47
186	227	64	227	3.9	9.300	6.613	-H450	12H15	natural	59
186	183	57	183	4.3	4.700	10.677	-H320	12D20	natural	53
186	163	64	163	2.7	4.500	12.000	-H210	12D20	natural	47
186	163	157	163	1.1	11.000	12.000	-H210	12L20	natural	47
186	125	116	125	1.6	7.800	12.000	-H210	12H15	natural	47
187	566	45	566	3.9	16.000	3.444	-H450	12L20	natural	59
187	182	57	182	3.0	4.500	10.720	-H210	12D20	natural	47
189	323	72	323	2.6	15.000	4.648	-H320	14H15	natural	53
189	323	104	323	1.8	24.000	4.648	-H320	14L15	natural	53
189	291	135	291	1.4	36.000	4.648	-H320	14P14	natural	53
189	280	83	280	1.8	7.800	10.720	-H210	12H30	natural	47
189	182	140	182	1.2	11.000	10.720	-H210	12L20	natural	47
189	140	104	140	1.8	7.800	10.720	-H210	12H15	natural	47
194	217	62	217	3.5	9.600	6.910	-H320	14D15	natural	53
194	217	67	217	3.3	8.800	6.910	-H320	12H15	natural	53
198	87	54	87	3.6	0.300	46.407	-H320	06F41	natural	53
199	274	41	274	3.6	1.900	13.673	-H210	09F38	natural	47
200	265	56	265	2.5	2.300	15.306	-H210	09H41	natural	47
200	265	64	265	2.3	4.400	15.306	-H210	12D41	natural	47
200	265	67	265	2.1	3.200	15.306	-H210	09L41	natural	47
200	245	46	245	3.2	1.900	15.306	-H210	09F38	natural	47
200	196	119	196	1.3	7.700	15.306	-H210	12H30	natural	47
200	127	82	127	2.2	4.400	15.306	-H210	12D20	natural	47
200	98	149	98	1.4	7.700	15.306	-H210	12H15	natural	47
201	296	50	296	2.9	2.300	13.673	-H210	09H41	natural	47
201	296	57	296	2.5	4.400	13.673	-H210	12D41	natural	47
201	296	60	296	2.4	3.200	13.673	-H210	09L41	natural	47



Selection tables

2-stage gearboxes

Umrichterbetrieb						i	Produkt		Kühlung	
$M_{2, max}$ [Nm]	$n_{2, th}$ [r/min]	M_2 [Nm]	$n_{2, eto}$ [r/min]	c	J [kgcm²]		g500	MCS		
201	258	99	258	1.5	7.700	13.673	-H210	12H35	natural	47
201	219	106	219	1.5	7.700	13.673	-H210	12H30	natural	47
201	186	49	186	3.1	1.300	21.802	-H210	09D41	natural	47
201	143	73	143	2.5	4.400	13.673	-H210	12D20	natural	47
201	143	179	143	1.0	11.000	13.673	-H210	12L20	natural	47
201	110	133	110	1.5	7.700	13.673	-H210	12H15	natural	47
202	121	49	121	4.3	0.400	33.564	-H320	06I41	natural	53
204	167	62	167	4.0	4.600	11.680	-H320	12D20	natural	53
204	85	56	85	3.4	0.300	47.679	-H210	06F41	natural	47
206	85	69	85	2.7	0.400	47.679	-H210	06I41	natural	47
210	242	62	242	2.4	2.200	16.750	-H210	09H41	natural	47
210	242	70	242	2.2	4.300	16.750	-H210	12D41	natural	47
210	242	73	242	2.1	3.100	16.750	-H210	09L41	natural	47
210	224	50	224	3.1	1.800	16.750	-H210	09F38	natural	47
210	216	69	216	2.2	2.200	18.750	-H210	09H41	natural	47
210	216	78	216	1.9	4.300	18.750	-H210	12D41	natural	47
210	216	82	216	1.8	3.100	18.750	-H210	09L41	natural	47
210	210	122	210	1.3	7.600	16.750	-H210	12H35	natural	47
210	200	56	200	2.7	1.800	18.750	-H210	09F38	natural	47
210	188	136	188	1.2	7.600	18.750	-H210	12H35	natural	47
210	186	80	186	1.9	2.100	21.802	-H210	09H41	natural	47
210	186	95	186	1.6	3.000	21.802	-H210	09L41	natural	47
210	179	130	179	1.3	7.600	16.750	-H210	12H30	natural	47
210	172	66	172	2.4	1.700	21.802	-H210	09F38	natural	47
210	166	54	166	2.8	1.300	24.405	-H210	09D41	natural	47
210	166	90	166	1.7	2.100	24.405	-H210	09H41	natural	47
210	166	107	166	1.4	3.000	24.405	-H210	09L41	natural	47
210	160	146	160	1.1	7.600	18.750	-H210	12H30	natural	47
210	154	73	154	2.1	1.700	24.405	-H210	09F38	natural	47
210	149	61	149	2.8	1.200	27.119	-H210	09D41	natural	47
210	149	100	149	1.7	2.000	27.119	-H210	09H41	natural	47
210	149	118	149	1.4	2.900	27.119	-H210	09L41	natural	47
210	138	82	138	2.2	1.600	27.119	-H210	09F38	natural	47
210	133	68	133	2.5	1.200	30.357	-H210	09D41	natural	47
210	133	112	133	1.5	2.000	30.357	-H210	09H41	natural	47
210	133	133	133	1.3	2.900	30.357	-H210	09L41	natural	47
210	124	91	124	1.9	1.600	30.357	-H210	09F38	natural	47
210	116	89	116	2.1	4.300	16.750	-H210	12D20	natural	47
210	115	51	115	3.4	0.400	35.095	-H210	06I41	natural	47
210	104	100	104	1.9	4.300	18.750	-H210	12D20	natural	47



Selection tables

2-stage gearboxes

Umrichterbetrieb						i	Produkt		Kühlung	
$M_{2, max}$ [Nm]	$n_{2, th}$ [r/min]	M_2 [Nm]	$n_{2, eto}$ [r/min]	c	J [kgcm²]		g500	MCS		
210	103	57	103	3.0	0.400	39.286	-H210	06I41	natural	47
210	90	163	90	1.3	7.600	16.750	-H210	12H15	natural	47
210	80	182	80	1.1	7.600	18.750	-H210	12H15	natural	47
212	161	65	161	3.6	4.700	12.128	-H320	12D20	natural	53
215	114	52	114	4.3	0.500	35.689	-H450	06I41	natural	59
218	282	91	282	2.2	12.000	6.910	-H320	12L20	natural	53
218	217	107	217	2.0	16.000	6.910	-H320	14H15	natural	53
218	217	154	217	1.4	25.000	6.910	-H320	14L15	natural	53
218	195	201	195	1.1	36.000	6.910	-H320	14P14	natural	53
218	87	68	87	2.9	0.400	46.407	-H320	06I41	natural	53
219	171	53	171	4.3	1.300	23.754	-H320	09D41	natural	53
220	413	62	413	3.3	14.000	4.724	-H450	12L20	natural	59
225	77	61	77	3.6	0.300	52.715	-H320	06F41	natural	53
227	321	80	321	2.6	12.000	6.083	-H320	12L20	natural	53
227	247	94	247	2.4	16.000	6.083	-H320	14H15	natural	53
227	247	136	247	1.7	25.000	6.083	-H320	14L15	natural	53
227	222	177	222	1.3	36.000	6.083	-H320	14P14	natural	53
230	106	56	106	3.4	0.400	38.238	-H320	06I41	natural	53
232	147	71	147	3.4	4.600	13.268	-H320	12D20	natural	53
234	74	64	74	3.8	0.300	54.750	-H450	06F41	natural	59
235	360	65	360	3.0	8.300	8.343	-H320	12H30	natural	53
235	180	74	180	3.4	9.100	8.343	-H320	14D15	natural	53
235	180	81	180	3.1	8.300	8.343	-H320	12H15	natural	53
237	323	79	323	2.7	13.000	6.045	-H450	12L20	natural	59
238	317	74	317	2.6	8.300	9.477	-H320	12H30	natural	53
238	206	124	206	1.8	12.000	9.477	-H320	12L20	natural	53
238	158	85	158	2.8	9.100	9.477	-H320	14D15	natural	53
238	158	92	158	2.6	8.300	9.477	-H320	12H15	natural	53
238	158	147	158	1.6	15.000	9.477	-H320	14H15	natural	53
238	158	211	158	1.1	24.000	9.477	-H320	14L15	natural	53
246	222	51	222	4.1	1.900	16.923	-H320	09F38	natural	53
247	295	87	295	2.6	13.000	6.613	-H450	12L20	natural	59
248	171	85	171	4.3	9.700	8.800	-H450	12H15	natural	59
248	77	77	77	2.9	0.400	52.715	-H320	06I41	natural	53
249	234	109	234	2.1	12.000	8.343	-H320	12L20	natural	53
249	180	130	180	1.9	15.000	8.343	-H320	14H15	natural	53
249	180	186	180	1.3	24.000	8.343	-H320	14L15	natural	53
249	162	243	162	1.0	36.000	8.343	-H320	14P14	natural	53
249	150	60	150	4.3	1.300	26.983	-H320	09D41	natural	53
252	318	73	318	4.0	17.000	4.724	-H450	14H15	natural	59



Selection tables

2-stage gearboxes

Umrichterbetrieb						i	Produkt		Kühlung	
$M_{2, max}$ [Nm]	$n_{2, th}$ [r/min]	M_2 [Nm]	$n_{2, eto}$ [r/min]	c	J [kgcm²]		g500	MCS		
254	247	94	247	2.1	8.000	12.128	-H320	12H30	natural	53
254	161	159	161	1.5	11.000	12.128	-H320	12L20	natural	53
254	124	108	124	2.3	8.800	12.128	-H320	14D15	natural	53
254	124	118	124	2.1	8.000	12.128	-H320	12H15	natural	53
254	124	188	124	1.4	15.000	12.128	-H320	14H15	natural	53
256	436	77	436	3.3	28.000	3.444	-H450	14L15	natural	59
256	392	100	392	2.5	40.000	3.444	-H450	14P14	natural	59
260	272	62	272	3.4	4.400	14.898	-H320	12D41	natural	53
260	131	79	131	3.4	4.400	14.898	-H320	12D20	natural	53
261	94	63	94	3.9	0.500	43.313	-H450	06I41	natural	59
261	93	63	93	3.8	0.400	43.436	-H320	06I41	natural	53
262	226	103	226	2.0	7.900	13.268	-H320	12H30	natural	53
262	147	174	147	1.4	11.000	13.268	-H320	12L20	natural	53
262	113	118	113	2.2	8.700	13.268	-H320	14D15	natural	53
262	113	129	113	2.0	7.900	13.268	-H320	12H15	natural	53
262	113	206	113	1.3	15.000	13.268	-H320	14H15	natural	53
264	66	72	66	3.8	0.300	61.875	-H450	06F41	natural	59
265	281	83	281	2.5	8.000	10.677	-H320	12H30	natural	53
265	183	140	183	1.7	11.000	10.677	-H320	12L20	natural	53
265	141	95	141	2.8	8.800	10.677	-H320	14D15	natural	53
265	141	104	141	2.6	8.000	10.677	-H320	12H15	natural	53
265	141	166	141	1.6	15.000	10.677	-H320	14H15	natural	53
265	141	238	141	1.1	24.000	10.677	-H320	14L15	natural	53
266	206	55	206	4.1	1.800	18.250	-H320	09F38	natural	53
270	74	80	74	3.1	0.400	54.750	-H450	06I41	natural	59
271	257	91	257	2.4	7.900	11.680	-H320	12H30	natural	53
271	167	153	167	1.6	11.000	11.680	-H320	12L20	natural	53
271	128	104	128	2.6	8.700	11.680	-H320	14D15	natural	53
271	128	113	128	2.4	7.900	11.680	-H320	12H15	natural	53
271	128	181	128	1.5	15.000	11.680	-H320	14H15	natural	53
271	128	261	128	1.0	24.000	11.680	-H320	14L15	natural	53
272	137	66	137	4.0	1.300	29.548	-H320	09D41	natural	53
280	301	77	301	4.0	9.100	9.965	-H450	12H30	natural	59
280	151	89	151	4.3	9.900	9.965	-H450	14D15	natural	59
280	151	97	151	4.0	9.100	9.965	-H450	12H15	natural	59
281	239	62	239	3.2	2.300	16.923	-H320	09H41	natural	53
281	239	71	239	2.9	4.400	16.923	-H320	12D41	natural	53
281	239	74	239	2.7	3.200	16.923	-H320	09L41	natural	53
281	208	123	208	1.7	7.700	16.923	-H320	12H35	natural	53
281	177	131	177	1.7	7.700	16.923	-H320	12H30	natural	53



Selection tables

2-stage gearboxes

Umrichterbetrieb						i	Produkt		Kühlung	
$M_{2, max}$ [Nm]	$n_{2, th}$ [r/min]	M_2 [Nm]	$n_{2, eto}$ [r/min]	c	J [kgcm²]		g500	MCS		
281	115	90	115	2.9	4.400	16.923	-H320	12D20	natural	53
281	115	222	115	1.2	11.000	16.923	-H320	12L20	natural	53
281	89	151	89	1.9	8.500	16.923	-H320	14D15	natural	53
281	89	164	89	1.7	7.700	16.923	-H320	12H15	natural	53
281	89	263	89	1.1	15.000	16.923	-H320	14H15	natural	53
289	272	55	272	3.8	2.300	14.898	-H320	09H41	natural	53
292	272	65	272	3.2	3.200	14.898	-H320	09L41	natural	53
293	318	105	318	2.8	27.000	4.724	-H450	14L15	natural	59
293	286	137	286	2.1	38.000	4.724	-H450	14P14	natural	59
294	237	108	237	2.0	7.700	14.898	-H320	12H35	natural	53
294	201	116	201	2.0	7.700	14.898	-H320	12H30	natural	53
294	131	195	131	1.4	11.000	14.898	-H320	12L20	natural	53
294	101	133	101	2.2	8.500	14.898	-H320	14D15	natural	53
294	101	145	101	2.0	7.700	14.898	-H320	12H15	natural	53
294	101	231	101	1.3	15.000	14.898	-H320	14H15	natural	53
294	83	71	83	3.9	0.500	48.950	-H450	06I41	natural	59
299	195	76	195	2.8	2.200	20.731	-H320	09H41	natural	53
299	195	86	195	2.5	4.300	20.731	-H320	12D41	natural	53
299	195	91	195	2.4	3.100	20.731	-H320	09L41	natural	53
299	181	62	181	3.5	1.800	20.731	-H320	09F38	natural	53
299	170	151	170	1.5	7.600	20.731	-H320	12H35	natural	53
299	145	161	145	1.5	7.600	20.731	-H320	12H30	natural	53
299	94	111	94	2.5	4.300	20.731	-H320	12D20	natural	53
299	94	272	94	1.0	11.000	20.731	-H320	12L20	natural	53
299	72	201	72	1.5	7.600	20.731	-H320	12H15	natural	53
303	264	88	264	3.6	18.000	5.678	-H450	14H15	natural	59
305	66	90	66	3.1	0.400	61.875	-H450	06I41	natural	59
307	222	67	222	3.3	2.200	18.250	-H320	09H41	natural	53
307	222	80	222	2.8	3.100	18.250	-H320	09L41	natural	53
308	343	74	343	3.9	14.000	5.678	-H450	12L20	natural	59
309	121	75	121	3.5	1.200	33.564	-H320	09D41	natural	53
313	222	76	222	3.0	4.300	18.250	-H320	12D41	natural	53
313	193	133	193	1.8	7.600	18.250	-H320	12H35	natural	53
313	164	142	164	1.8	7.600	18.250	-H320	12H30	natural	53
313	107	97	107	2.9	4.300	18.250	-H320	12D20	natural	53
313	107	239	107	1.2	11.000	18.250	-H320	12L20	natural	53
313	82	177	82	1.8	7.600	18.250	-H320	12H15	natural	53
315	264	127	264	2.5	27.000	5.678	-H450	14L15	natural	59
315	238	165	238	1.9	38.000	5.678	-H450	14P14	natural	59
317	266	87	266	3.6	9.000	11.262	-H450	12H30	natural	59



Selection tables

2-stage gearboxes

Umrichterbetrieb						i	Produkt		Kühlung	
$M_{2, max}$ [Nm]	$n_{2, th}$ [r/min]	M_2 [Nm]	$n_{2, eto}$ [r/min]	c	J [kgcm²]		g500	MCS		
317	133	101	133	4.0	9.800	11.262	-H450	14D15	natural	59
317	133	109	133	3.7	9.000	11.262	-H450	12H15	natural	59
320	171	88	171	2.6	2.100	23.754	-H320	09H41	natural	53
320	171	104	171	2.2	3.000	23.754	-H320	09L41	natural	53
320	158	71	158	3.3	1.700	23.754	-H320	09F38	natural	53
320	150	99	150	2.6	2.100	26.983	-H320	09H41	natural	53
320	150	118	150	2.2	3.000	26.983	-H320	09L41	natural	53
320	139	81	139	3.3	1.700	26.983	-H320	09F38	natural	53
320	137	109	137	2.4	2.100	29.548	-H320	09H41	natural	53
320	137	129	137	2.0	3.000	29.548	-H320	09L41	natural	53
320	127	89	127	3.0	1.700	29.548	-H320	09F38	natural	53
320	121	124	121	2.1	2.000	33.564	-H320	09H41	natural	53
320	121	147	121	1.8	2.900	33.564	-H320	09L41	natural	53
320	112	101	112	2.6	1.600	33.564	-H320	09F38	natural	53
322	94	97	94	3.0	1.300	43.313	-H450	09D41	natural	59
322	94	160	94	1.8	2.100	43.313	-H450	09H41	natural	59
322	94	189	94	1.5	3.000	43.313	-H450	09L41	natural	59
322	87	130	87	2.3	1.700	43.313	-H450	09F38	natural	59
323	248	94	248	3.4	16.000	6.045	-H450	14H15	natural	59
323	248	135	248	2.4	26.000	6.045	-H450	14L15	natural	59
323	223	176	223	1.8	37.000	6.045	-H450	14P14	natural	59
323	169	67	169	4.1	2.000	22.170	-H450	09F38	natural	59
329	114	80	114	4.1	1.300	35.689	-H450	09D41	natural	59
331	238	63	238	4.1	2.800	17.033	-H450	09H41	natural	59
334	227	103	227	3.3	16.000	6.613	-H450	14H15	natural	59
334	227	148	227	2.3	25.000	6.613	-H450	14L15	natural	59
334	204	192	204	1.7	37.000	6.613	-H450	14P14	natural	59
336	210	80	210	4.0	4.900	19.250	-H450	12D41	natural	59
336	101	103	101	4.0	4.900	19.250	-H450	12D20	natural	59
347	244	96	244	3.4	8.900	12.320	-H450	12H30	natural	59
347	122	110	122	3.7	9.700	12.320	-H450	14D15	natural	59
347	122	120	122	3.4	8.900	12.320	-H450	12H15	natural	59
354	250	102	250	3.2	13.000	7.787	-H450	12L20	natural	59
354	193	121	193	2.9	17.000	7.787	-H450	14H15	natural	59
354	193	174	193	2.0	26.000	7.787	-H450	14L15	natural	59
354	173	227	173	1.6	37.000	7.787	-H450	14P14	natural	59
356	238	74	238	3.4	3.700	17.033	-H450	09L41	natural	59
365	150	75	150	4.1	2.000	25.056	-H450	09F38	natural	59
366	83	109	83	3.0	1.300	48.950	-H450	09D41	natural	59
366	83	180	83	1.8	2.100	48.950	-H450	09H41	natural	59



Selection tables

2-stage gearboxes

Umrichterbetrieb						i	Produkt		Kühlung	
$M_{2, max}$ [Nm]	$n_{2, th}$ [r/min]	M_2 [Nm]	$n_{2, eto}$ [r/min]	c	J [kgcm²]		g500	MCS		
366	83	214	83	1.6	3.000	48.950	-H450	09L41	natural	59
366	77	147	77	2.3	1.700	48.950	-H450	09F38	natural	59
370	222	115	222	2.9	13.000	8.800	-H450	12L20	natural	59
370	171	137	171	2.7	17.000	8.800	-H450	14H15	natural	59
370	171	196	171	1.9	26.000	8.800	-H450	14L15	natural	59
370	153	256	153	1.4	37.000	8.800	-H450	14P14	natural	59
372	183	82	183	3.3	2.400	22.170	-H450	09H41	natural	59
372	183	97	183	2.8	3.300	22.170	-H450	09L41	natural	59
372	100	90	100	4.5	1.300	40.333	-H450	09D41	natural	59
374	210	71	210	4.1	2.800	19.250	-H450	09H41	natural	59
384	196	131	196	2.7	12.000	9.965	-H450	12L20	natural	59
384	151	155	151	2.5	16.000	9.965	-H450	14H15	natural	59
384	151	222	151	1.7	25.000	9.965	-H450	14L15	natural	59
384	136	290	136	1.3	37.000	9.965	-H450	14P14	natural	59
386	147	102	147	3.1	2.300	27.578	-H450	09H41	natural	59
386	147	120	147	2.6	3.200	27.578	-H450	09L41	natural	59
386	136	83	136	3.9	1.900	27.578	-H450	09F38	natural	59
387	183	92	183	3.5	4.500	22.170	-H450	12D41	natural	59
387	88	118	88	3.5	4.500	22.170	-H450	12D20	natural	59
391	254	101	254	3.2	8.500	13.905	-H450	12H35	natural	59
391	216	108	216	3.1	8.500	13.905	-H450	12H30	natural	59
391	108	124	108	3.4	9.300	13.905	-H450	14D15	natural	59
391	108	135	108	3.2	8.500	13.905	-H450	12H15	natural	59
400	173	148	173	2.5	12.000	11.262	-H450	12L20	natural	59
400	133	175	133	2.3	16.000	11.262	-H450	14H15	natural	59
400	133	251	133	1.6	25.000	11.262	-H450	14L15	natural	59
400	120	328	120	1.2	36.000	11.262	-H450	14P14	natural	59
400	114	132	114	2.5	2.100	35.689	-H450	09H41	natural	59
400	114	156	114	2.1	3.000	35.689	-H450	09L41	natural	59
400	105	107	105	3.1	1.700	35.689	-H450	09F38	natural	59
403	210	84	210	3.4	3.700	19.250	-H450	09L41	natural	59
411	158	161	158	2.3	12.000	12.320	-H450	12L20	natural	59
411	122	191	122	2.1	16.000	12.320	-H450	14H15	natural	59
411	122	275	122	1.5	25.000	12.320	-H450	14L15	natural	59
411	110	359	110	1.1	36.000	12.320	-H450	14P14	natural	59
420	162	92	162	3.3	2.400	25.056	-H450	09H41	natural	59
420	162	109	162	2.8	3.300	25.056	-H450	09L41	natural	59
426	140	182	140	2.1	12.000	13.905	-H450	12L20	natural	59
426	108	216	108	2.0	15.000	13.905	-H450	14H15	natural	59
426	108	310	108	1.4	25.000	13.905	-H450	14L15	natural	59



Selection tables

2-stage gearboxes

Umrichterbetrieb						i	Produkt		Kühlung	
$M_{2, max}$ [Nm]	$n_{2, th}$ [r/min]	M_2 [Nm]	$n_{2, eto}$ [r/min]	c	J [kgcm²]		g500	MCS		
426	97	405	97	1.1	36.000	13.905	-H450	14P14	natural	59
436	130	115	130	3.1	2.300	31.167	-H450	09H41	natural	59
436	130	136	130	2.6	3.200	31.167	-H450	09L41	natural	59
436	120	94	120	3.9	1.900	31.167	-H450	09F38	natural	59
438	162	105	162	3.1	4.500	25.056	-H450	12D41	natural	59
438	78	134	78	3.1	4.500	25.056	-H450	12D20	natural	59
441	224	114	224	2.9	8.500	15.714	-H450	12H35	natural	59
441	191	122	191	2.9	8.500	15.714	-H450	12H30	natural	59
441	124	206	124	2.0	12.000	15.714	-H450	12L20	natural	59
441	96	140	96	3.1	9.300	15.714	-H450	14D15	natural	59
441	96	152	96	2.9	8.500	15.714	-H450	12H15	natural	59
441	96	244	96	1.8	15.000	15.714	-H450	14H15	natural	59
441	96	351	96	1.3	25.000	15.714	-H450	14L15	natural	59
448	183	140	183	2.4	8.200	19.250	-H450	12H35	natural	59
448	156	149	156	2.4	8.200	19.250	-H450	12H30	natural	59
448	101	252	101	1.6	12.000	19.250	-H450	12L20	natural	59
448	78	172	78	2.6	9.000	19.250	-H450	14D15	natural	59
448	78	187	78	2.4	8.200	19.250	-H450	12H15	natural	59
448	78	299	78	1.5	15.000	19.250	-H450	14H15	natural	59
448	78	430	78	1.0	24.000	19.250	-H450	14L15	natural	59
450	207	124	207	2.7	8.200	17.033	-H450	12H35	natural	59
450	189	231	189	1.5	15.000	17.033	-H450	14H32	natural	59
450	176	132	176	2.7	8.200	17.033	-H450	12H30	natural	59
450	159	161	159	2.1	7.800	22.170	-H450	12H35	natural	59
450	147	115	147	3.2	4.400	27.578	-H450	12D41	natural	59
450	147	294	147	1.3	11.000	27.578	-H450	12L41	natural	59
450	146	301	146	1.2	15.000	22.170	-H450	14H32	natural	59
450	141	182	141	1.9	7.800	25.056	-H450	12H35	natural	59
450	135	172	135	2.1	7.800	22.170	-H450	12H30	natural	59
450	130	130	130	2.8	4.400	31.167	-H450	12D41	natural	59
450	130	333	130	1.1	11.000	31.167	-H450	12L41	natural	59
450	129	340	129	1.0	15.000	25.056	-H450	14H32	natural	59
450	128	201	128	1.9	7.700	27.578	-H450	12H35	natural	59
450	120	194	120	1.8	7.800	25.056	-H450	12H30	natural	59
450	115	223	115	1.9	12.000	17.033	-H450	12L20	natural	59
450	113	227	113	1.7	7.700	31.167	-H450	12H35	natural	59
450	109	214	109	1.9	7.700	27.578	-H450	12H30	natural	59
450	100	149	100	2.7	2.100	40.333	-H450	09H41	natural	59
450	100	176	100	2.3	3.000	40.333	-H450	09L41	natural	59
450	96	242	96	1.7	7.700	31.167	-H450	12H30	natural	59



Selection tables

2-stage gearboxes

Umrichterbetrieb						i	Produkt		Kühlung	
$M_{2, max}$ [Nm]	$n_{2, th}$ [r/min]	M_2 [Nm]	$n_{2, eto}$ [r/min]	c	J [kgcm²]		g500	MCS		
450	93	121	93	3.4	1.700	40.333	-H450	09F38	natural	59
450	88	152	88	3.0	9.000	17.033	-H450	14D15	natural	59
450	88	165	88	2.7	8.200	17.033	-H450	12H15	natural	59
450	88	264	88	1.7	15.000	17.033	-H450	14H15	natural	59
450	88	290	88	1.4	11.000	22.170	-H450	12L20	natural	59
450	88	380	88	1.2	24.000	17.033	-H450	14L15	natural	59
450	78	328	78	1.3	11.000	25.056	-H450	12L20	natural	59
450	71	147	71	3.1	4.400	27.578	-H450	12D20	natural	59
450	71	361	71	1.3	11.000	27.578	-H450	12L20	natural	59
450	68	198	68	2.3	8.600	22.170	-H450	14D15	natural	59
450	68	215	68	2.1	7.800	22.170	-H450	12H15	natural	59
450	68	344	68	1.3	15.000	22.170	-H450	14H15	natural	59
450	63	166	63	2.7	4.400	31.167	-H450	12D20	natural	59
450	63	408	63	1.1	11.000	31.167	-H450	12L20	natural	59
450	60	224	60	2.0	8.600	25.056	-H450	14D15	natural	59
450	60	243	60	1.9	7.800	25.056	-H450	12H15	natural	59
450	60	389	60	1.2	15.000	25.056	-H450	14H15	natural	59
450	54	268	54	1.7	7.700	27.578	-H450	12H15	natural	59
450	48	302	48	1.5	7.700	31.167	-H450	12H15	natural	59



Selection tables

3-stage gearboxes

Umrichterbetrieb						i	Produkt		Kühlung	
$M_{2, max}$ [Nm]	$n_{2, th}$ [r/min]	M_2 [Nm]	$n_{2, eto}$ [r/min]	c	J [kgcm²]		g500	MCS		
127	73	32	73	5.4	0.200	55.529	-H210	06C41	natural	47
143	65	36	65	4.8	0.200	62.160	-H210	06C41	natural	47
163	57	41	57	4.2	0.200	71.026	-H210	06C41	natural	47
182	93	50	93	3.0	0.300	43.390	-H210	06F41	natural	47
182	51	46	51	3.8	0.200	79.507	-H210	06C41	natural	47
204	83	56	83	3.1	0.300	48.571	-H210	06F41	natural	47
210	93	62	93	2.4	0.400	43.390	-H210	06I41	natural	47
210	93	95	93	1.6	1.200	43.390	-H210	09D41	natural	47
210	86	129	86	1.2	1.600	43.390	-H210	09F38	natural	47
210	83	70	83	2.5	0.400	48.571	-H210	06I41	natural	47
210	83	107	83	1.6	1.200	48.571	-H210	09D41	natural	47
210	77	144	77	1.2	1.600	48.571	-H210	09F38	natural	47
210	73	64	73	2.7	0.300	55.529	-H210	06F41	natural	47
210	73	80	73	2.1	0.400	55.529	-H210	06I41	natural	47
210	73	122	73	1.4	1.200	55.529	-H210	09D41	natural	47
210	68	165	68	1.1	1.600	55.529	-H210	09F38	natural	47
210	65	71	65	2.4	0.300	62.160	-H210	06F41	natural	47
210	65	89	65	1.9	0.400	62.160	-H210	06I41	natural	47
210	65	137	65	1.3	1.200	62.160	-H210	09D41	natural	47
210	57	81	57	2.1	0.300	71.026	-H210	06F41	natural	47
210	57	102	57	1.7	0.400	71.026	-H210	06I41	natural	47
210	51	91	51	1.9	0.300	79.507	-H210	06F41	natural	47
210	51	114	51	1.5	0.400	79.507	-H210	06I41	natural	47
210	44	53	44	3.6	0.200	92.205	-H210	06C41	natural	47
210	44	106	44	1.8	0.300	92.205	-H210	06F41	natural	47
210	44	132	44	1.4	0.300	92.205	-H210	06I41	natural	47
210	39	59	39	3.2	0.200	103.214	-H210	06C41	natural	47
210	39	118	39	1.6	0.300	103.214	-H210	06F41	natural	47
210	39	148	39	1.3	0.300	103.214	-H210	06I41	natural	47
226	75	62	75	4.2	0.400	53.703	-H320	06F41	natural	53
254	67	69	67	3.8	0.300	60.502	-H320	06F41	natural	53
262	36	65	36	4.4	0.200	114.118	-H320	06C41	natural	53
278	33	70	33	5.8	0.200	121.342	-H450	06C41	natural	59
280	86	68	86	3.9	0.400	47.276	-H320	06I41	natural	53
289	59	79	59	3.3	0.300	68.726	-H320	06F41	natural	53
315	30	79	30	5.2	0.200	137.133	-H450	06C41	natural	59
318	75	77	75	3.4	0.400	53.703	-H320	06I41	natural	53
320	86	104	86	2.5	1.200	47.276	-H320	09D41	natural	53
320	86	172	86	1.5	2.000	47.276	-H320	09H41	natural	53
320	86	203	86	1.3	2.900	47.276	-H320	09L41	natural	53



Selection tables

3-stage gearboxes

Umrichterbetrieb						i	Produkt		Kühlung	
$M_{2, max}$ [Nm]	$n_{2, th}$ [r/min]	M_2 [Nm]	$n_{2, eto}$ [r/min]	c	J [kgcm²]		g500	MCS		
320	79	140	79	1.9	1.600	47.276	-H320	09F38	natural	53
320	75	118	75	2.2	1.200	53.703	-H320	09D41	natural	53
320	75	195	75	1.3	2.000	53.703	-H320	09H41	natural	53
320	75	231	75	1.1	2.900	53.703	-H320	09L41	natural	53
320	70	159	70	1.7	1.600	53.703	-H320	09F38	natural	53
320	67	87	67	3.0	0.400	60.502	-H320	06I41	natural	53
320	67	133	67	2.0	1.200	60.502	-H320	09D41	natural	53
320	67	220	67	1.2	2.000	60.502	-H320	09H41	natural	53
320	67	260	67	1.0	2.900	60.502	-H320	09L41	natural	53
320	62	179	62	1.5	1.600	60.502	-H320	09F38	natural	53
320	59	99	59	2.6	0.400	68.726	-H320	06I41	natural	53
320	59	151	59	1.7	1.200	68.726	-H320	09D41	natural	53
320	59	250	59	1.1	2.000	68.726	-H320	09H41	natural	53
320	55	204	55	1.3	1.600	68.726	-H320	09F38	natural	53
320	52	89	52	2.9	0.300	77.387	-H320	06F41	natural	53
320	52	111	52	2.4	0.400	77.387	-H320	06I41	natural	53
320	46	101	46	2.9	0.300	87.906	-H320	06F41	natural	53
320	46	126	46	2.3	0.400	87.906	-H320	06I41	natural	53
320	40	115	40	2.5	0.300	100.462	-H320	06F41	natural	53
320	40	144	40	2.0	0.300	100.462	-H320	06I41	natural	53
320	36	131	36	2.2	0.300	114.118	-H320	06F41	natural	53
320	36	164	36	1.8	0.300	114.118	-H320	06I41	natural	53
331	51	90	51	4.1	0.400	78.794	-H450	06F41	natural	59
358	26	90	26	4.5	0.200	156.274	-H450	06C41	natural	59
366	66	89	66	4.2	0.500	61.774	-H450	06I41	natural	59
374	46	102	46	4.0	0.400	89.048	-H450	06F41	natural	59
401	92	97	92	3.3	1.500	44.124	-H450	09D41	natural	59
405	23	101	23	4.0	0.200	176.611	-H450	06C41	natural	59
406	42	111	42	3.7	0.300	96.522	-H450	06F41	natural	59
414	58	100	58	3.7	0.500	69.813	-H450	06I41	natural	59
450	92	160	92	2.0	2.300	44.124	-H450	09H41	natural	59
450	92	190	92	1.7	3.200	44.124	-H450	09L41	natural	59
450	85	131	85	2.5	1.900	44.124	-H450	09F38	natural	59
450	81	110	81	3.4	1.500	49.867	-H450	09D41	natural	59
450	81	181	81	2.0	2.300	49.867	-H450	09H41	natural	59
450	81	214	81	1.7	3.200	49.867	-H450	09L41	natural	59
450	75	148	75	2.5	1.900	49.867	-H450	09F38	natural	59
450	72	124	72	3.0	1.400	56.469	-H450	09D41	natural	59
450	72	205	72	1.8	2.200	56.469	-H450	09H41	natural	59
450	72	243	72	1.5	3.100	56.469	-H450	09L41	natural	59



Selection tables

3-stage gearboxes

Umrichterbetrieb						i	Produkt		Kühlung	
$M_{2, max}$ [Nm]	$n_{2, th}$ [r/min]	M_2 [Nm]	$n_{2, eto}$ [r/min]	c	J [kgcm²]		g500	MCS		
450	66	136	66	2.7	1.300	61.774	-H450	09D41	natural	59
450	66	167	66	2.3	1.800	56.469	-H450	09F38	natural	59
450	66	224	66	1.6	2.100	61.774	-H450	09H41	natural	59
450	66	266	66	1.4	3.000	61.774	-H450	09L41	natural	59
450	61	183	61	2.1	1.700	61.774	-H450	09F38	natural	59
450	58	153	58	2.4	1.300	69.813	-H450	09D41	natural	59
450	58	254	58	1.4	2.100	69.813	-H450	09H41	natural	59
450	58	300	58	1.2	3.000	69.813	-H450	09L41	natural	59
450	54	207	54	1.8	1.700	69.813	-H450	09F38	natural	59
450	51	113	51	3.3	0.500	78.794	-H450	06I41	natural	59
450	51	173	51	2.1	1.300	78.794	-H450	09D41	natural	59
450	51	286	51	1.3	2.100	78.794	-H450	09H41	natural	59
450	51	339	51	1.1	3.000	78.794	-H450	09L41	natural	59
450	48	233	48	1.6	1.700	78.794	-H450	09F38	natural	59
450	46	128	46	3.2	0.500	89.048	-H450	06I41	natural	59
450	46	196	46	2.1	1.300	89.048	-H450	09D41	natural	59
450	46	323	46	1.3	2.100	89.048	-H450	09H41	natural	59
450	46	383	46	1.1	3.000	89.048	-H450	09L41	natural	59
450	42	138	42	2.9	0.400	96.522	-H450	06I41	natural	59
450	42	212	42	1.9	1.200	96.522	-H450	09D41	natural	59
450	42	264	42	1.6	1.700	89.048	-H450	09F38	natural	59
450	42	351	42	1.2	2.000	96.522	-H450	09H41	natural	59
450	39	286	39	1.5	1.600	96.522	-H450	09F38	natural	59
450	37	125	37	3.3	0.300	109.083	-H450	06F41	natural	59
450	37	156	37	2.6	0.400	109.083	-H450	06I41	natural	59
450	37	240	37	1.7	1.200	109.083	-H450	09D41	natural	59
450	37	396	37	1.0	2.000	109.083	-H450	09H41	natural	59
450	34	323	34	1.3	1.600	109.083	-H450	09F38	natural	59
450	33	139	33	2.9	0.300	121.342	-H450	06F41	natural	59
450	33	174	33	2.3	0.400	121.342	-H450	06I41	natural	59
450	30	157	30	2.6	0.300	137.133	-H450	06F41	natural	59
450	30	197	30	2.1	0.400	137.133	-H450	06I41	natural	59
450	26	179	26	2.3	0.300	156.274	-H450	06F41	natural	59
450	26	224	26	1.8	0.400	156.274	-H450	06I41	natural	59
450	23	203	23	2.0	0.300	176.611	-H450	06F41	natural	59
450	23	253	23	1.6	0.400	176.611	-H450	06I41	natural	59



Dimensions, notes

Notes on the dimensions

The following legend shows the layout of the dimension sheets.

Product gearbox

g500-H100

Driven shaft design

Abmessungen mit Vollwelle

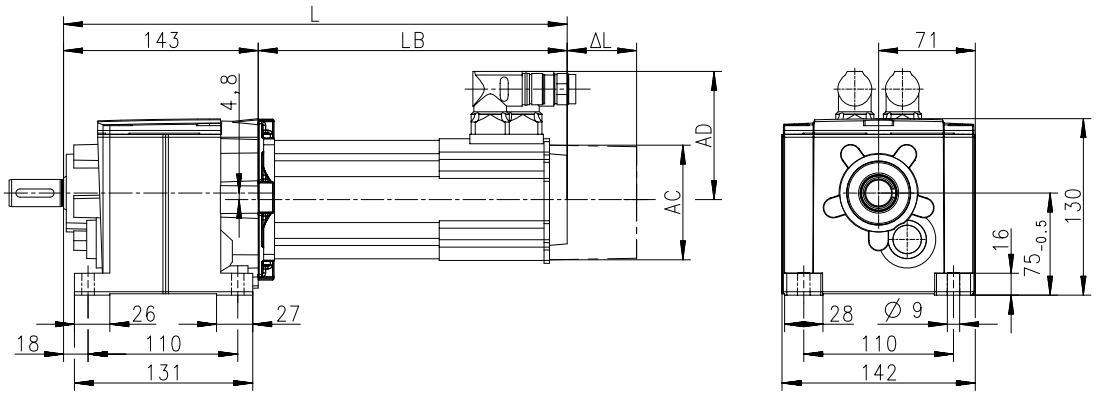

Product Motor

Produkt			MCS						
			06C41	06F41	06I41	09D41	09F38	09H41	09L41
Abmessungen									
Gesamtlänge	**L**	**[mm]**	~~274~~	304	334	327	347	367	407
Länge Motor	**LB**	**[mm]**	~~131.4~~	161.4	191.4	183.9	203.9	223.9	263.9
Länge Motoranbauten	**Δ L**	**[mm]**		100		71			
Motordurchmesser	**AC**	**[mm]**		86		89			
Abstand Motor/Anschluss	**AD**	**[mm]**		77		89.7			

Distance of motor centre to the end of connector

Total length of the drive without built-on accessories

Motor diameter

Motor length without built-on accessories

Additional length of the built-on accessories (longest version)

6.3



Dimensions, self-ventilated motors

g500-H45

Dimensions with solid shaft

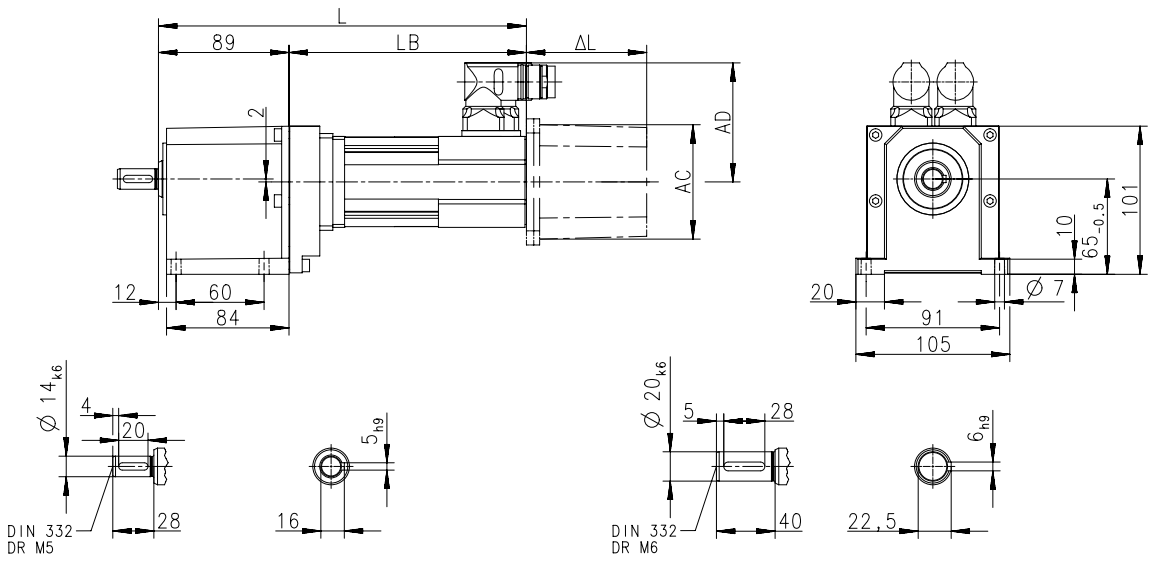

Produkt			MCS		
			06C41	06F41	06I41
Abmessungen					
Gesamtlänge	**L**	**[mm]**	220	250	280
Länge Motor	**LB**	**[mm]**	131.4	161.4	191.4
Länge Motoranbauten	**Δ L**	**[mm]**	100		
Motordurchmesser	**AC**	**[mm]**	86		
Abstand Motor/Anschluss	**AD**	**[mm]**	77		



Dimensions, self-ventilated motors

g500-H45

Dimensions with solid shaft and centering

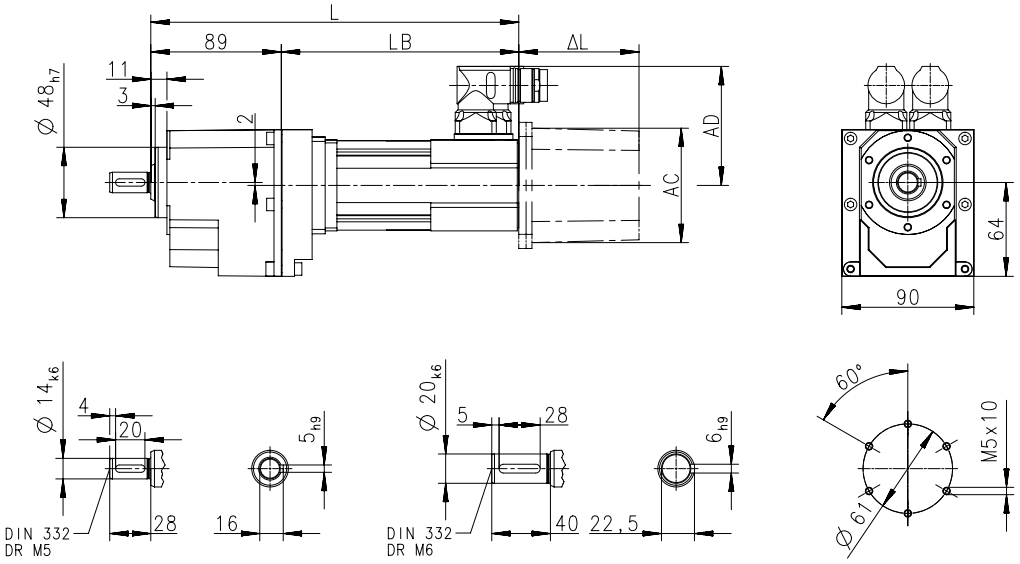

Produkt			MCS		
			06C41	06F41	06I41
Abmessungen					
Gesamtlänge	**L**	**[mm]**	220	250	280
Länge Motor	**LB**	**[mm]**	131.4	161.4	191.4
Länge Motoranbauten	**Δ L**	**[mm]**	100		
Motordurchmesser	**AC**	**[mm]**	86		
Abstand Motor/Anschluss	**AD**	**[mm]**	77		



Dimensions, self-ventilated motors

g500-H45

Dimensions with solid shaft and Flange

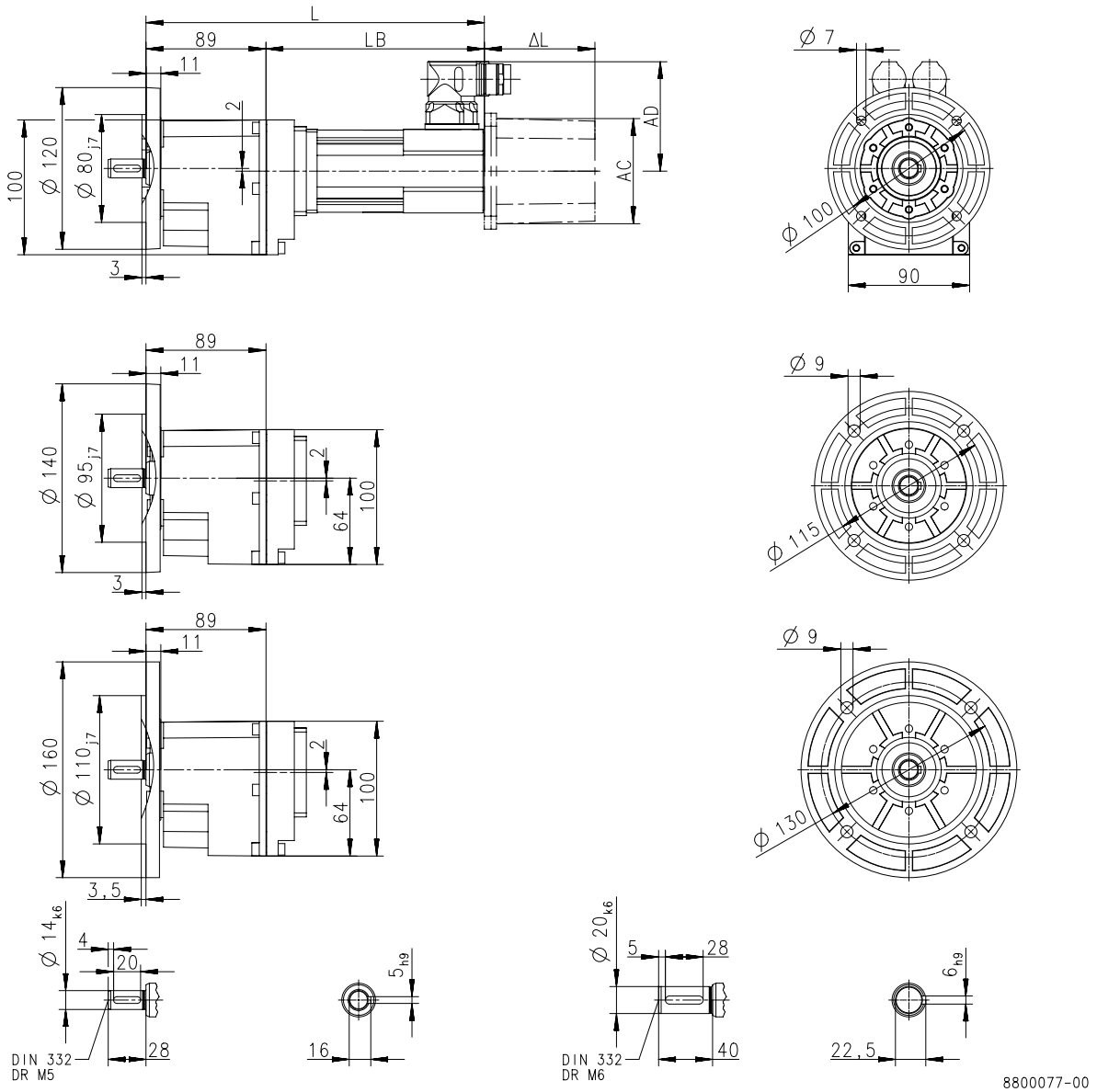

Produkt			MCS		
			06C41	06F41	06I41
Abmessungen					
Gesamtlänge	**L**	**[mm]**	220	250	280
Länge Motor	**LB**	**[mm]**	131.4	161.4	191.4
Länge Motoranbauten	**Δ L**	**[mm]**	100		
Motordurchmesser	**AC**	**[mm]**	86		
Abstand Motor/Anschluss	**AD**	**[mm]**	77		



Dimensions, self-ventilated motors

g500-H100

Dimensions with solid shaft

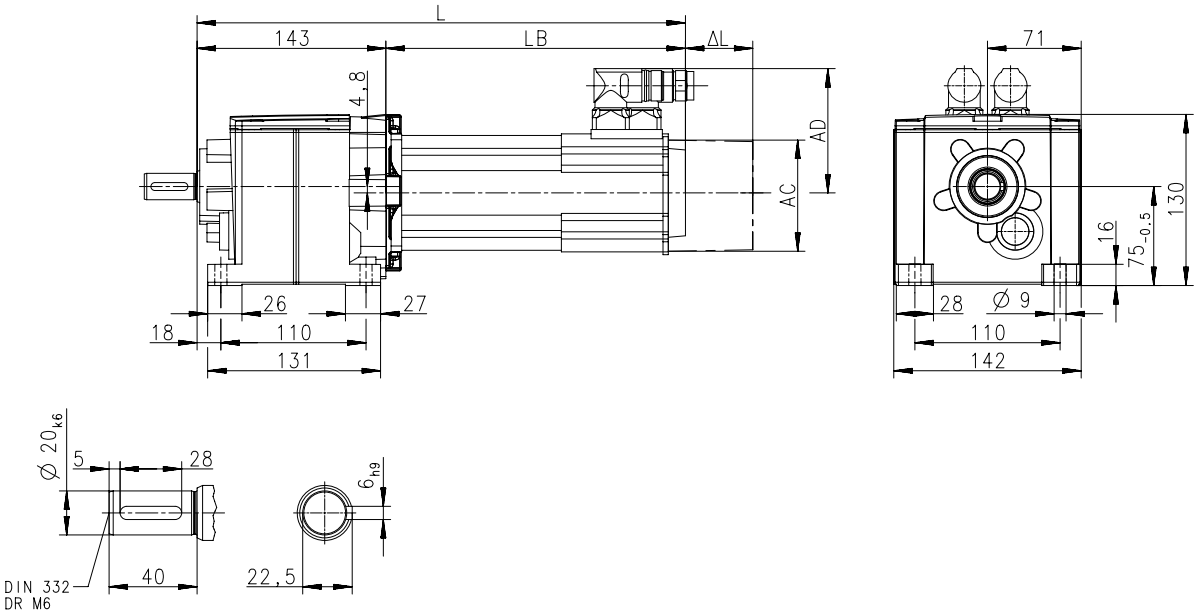

Produkt			MCS						
			06C41	06F41	06I41	09D41	09F38	09H41	09L41
Abmessungen									
Gesamtlänge	**L**	**[mm]**	274	304	334	327	347	367	407
Länge Motor	**LB**	**[mm]**	131.4	161.4	191.4	183.9	203.9	223.9	263.9
Länge Motoranbauten	**Δ L**	**[mm]**	100			71			
Motordurchmesser	**AC**	**[mm]**	86			89			
Abstand Motor/Anschluss	**AD**	**[mm]**	77			89.7			



Dimensions, self-ventilated motors

g500-H100

Dimensions with solid shaft and centering

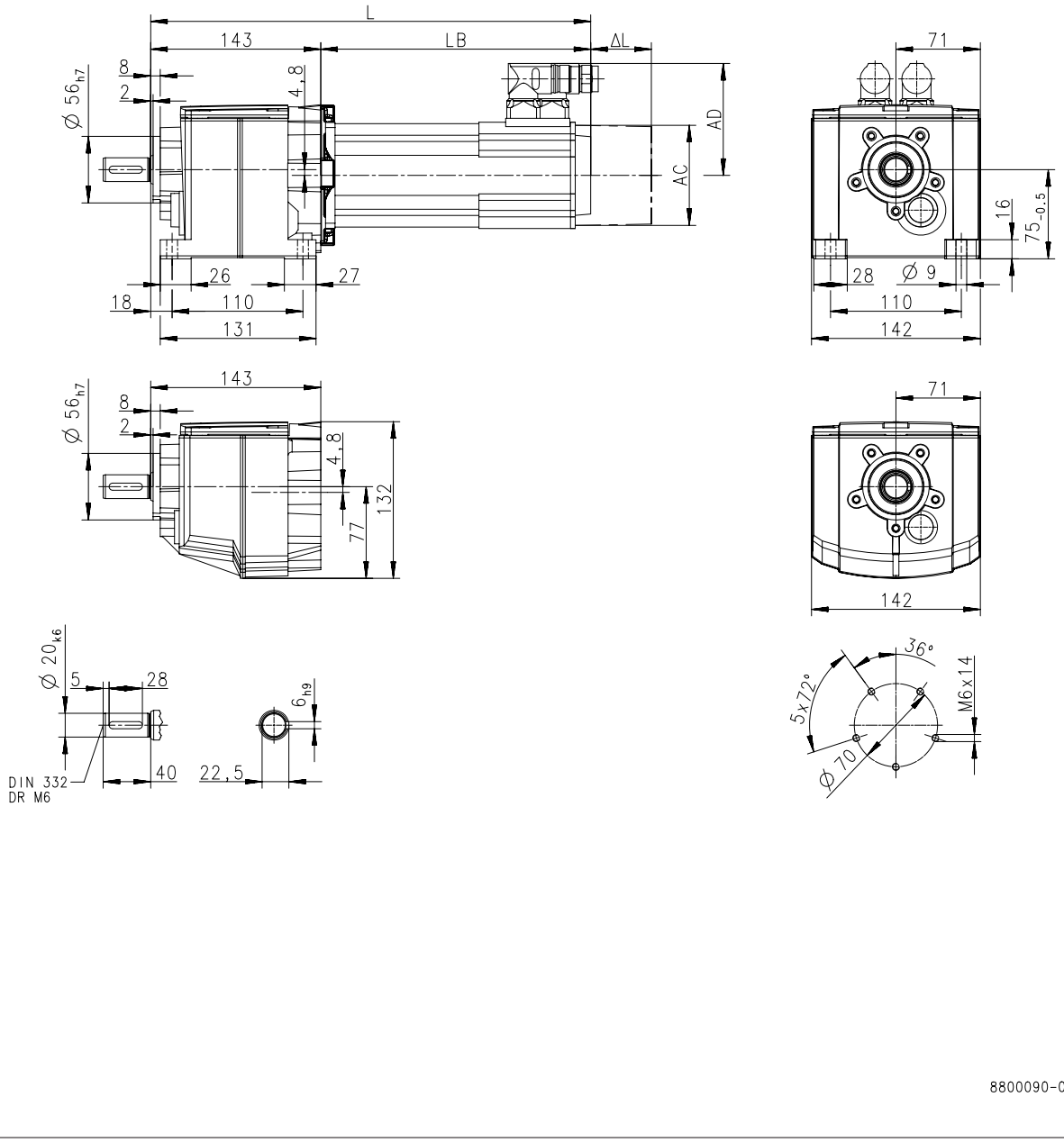

Produkt			MCS						
			06C41	06F41	06I41	09D41	09F38	09H41	09L41
Abmessungen									
Gesamtlänge	**L**	**[mm]**	274	304	334	327	347	367	407
Länge Motor	**LB**	**[mm]**	131.4	161.4	191.4	183.9	203.9	223.9	263.9
Länge Motoranbauten	**Δ L**	**[mm]**	100			71			
Motordurchmesser	**AC**	**[mm]**	86			89			
Abstand Motor/Anschluss	**AD**	**[mm]**	77			89.7			



Dimensions, self-ventilated motors

g500-H100

Dimensions with solid shaft and Flange

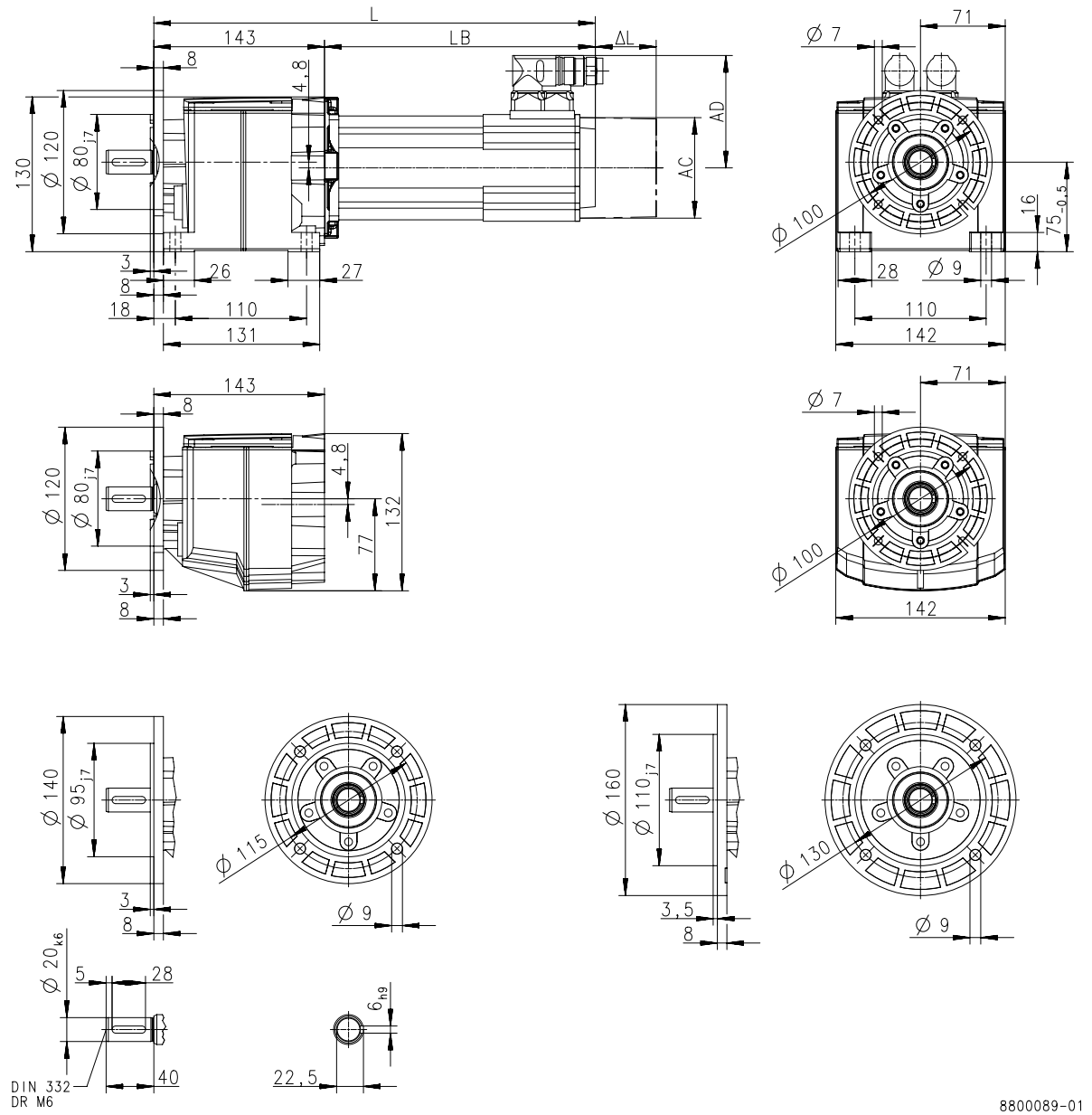

Produkt			MCS						
			06C41	06F41	06I41	09D41	09F38	09H41	09L41
Abmessungen									
Gesamtlänge	**L**	**[mm]**	274	304	334	327	347	367	407
Länge Motor	**LB**	**[mm]**	131.4	161.4	191.4	183.9	203.9	223.9	263.9
Länge Motoranbauten	**Δ L**	**[mm]**	100			71			
Motordurchmesser	**AC**	**[mm]**	86			89			
Abstand Motor/Anschluss	**AD**	**[mm]**	77			89.7			



Dimensions, self-ventilated motors

g500-H140

Dimensions with solid shaft

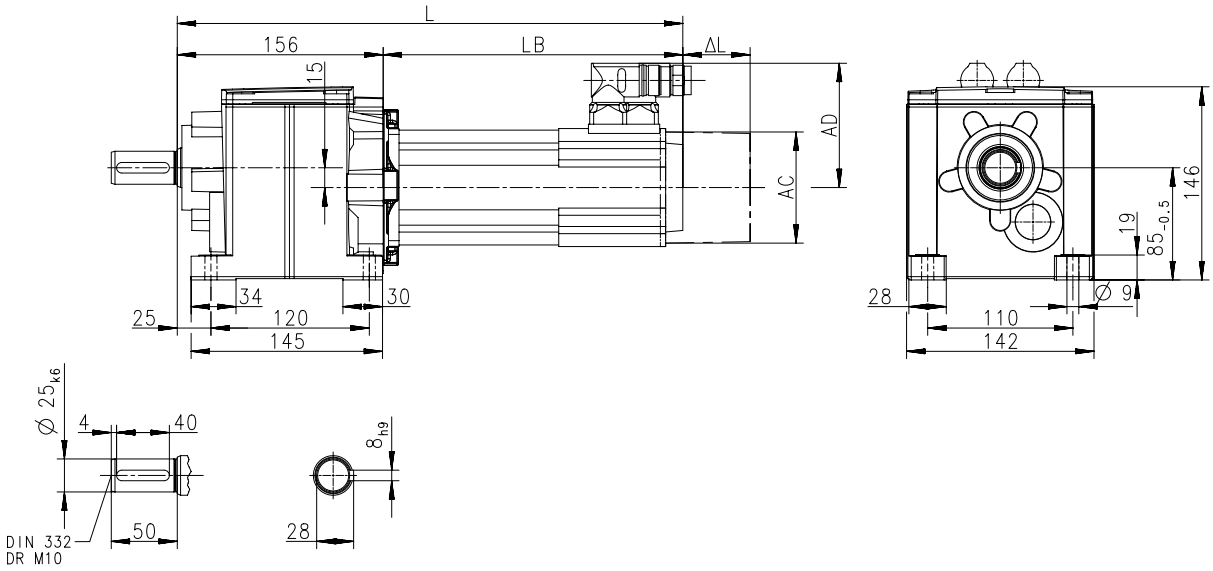

Produkt			MCS						
			06C41	06F41	06I41	09D41	09F38	09H41	09L41
Abmessungen									
Gesamtlänge	**L**	**[mm]**	287	317	347	340	360	380	420
Länge Motor	**LB**	**[mm]**	131.4	161.4	191.4	183.9	203.9	223.9	263.9
Länge Motoranbauten	**Δ L**	**[mm]**	100			71			
Motordurchmesser	**AC**	**[mm]**	86			89			
Abstand Motor/Anschluss	**AD**	**[mm]**	77			89.7			



Dimensions, self-ventilated motors

g500-H140

Dimensions with solid shaft and centering

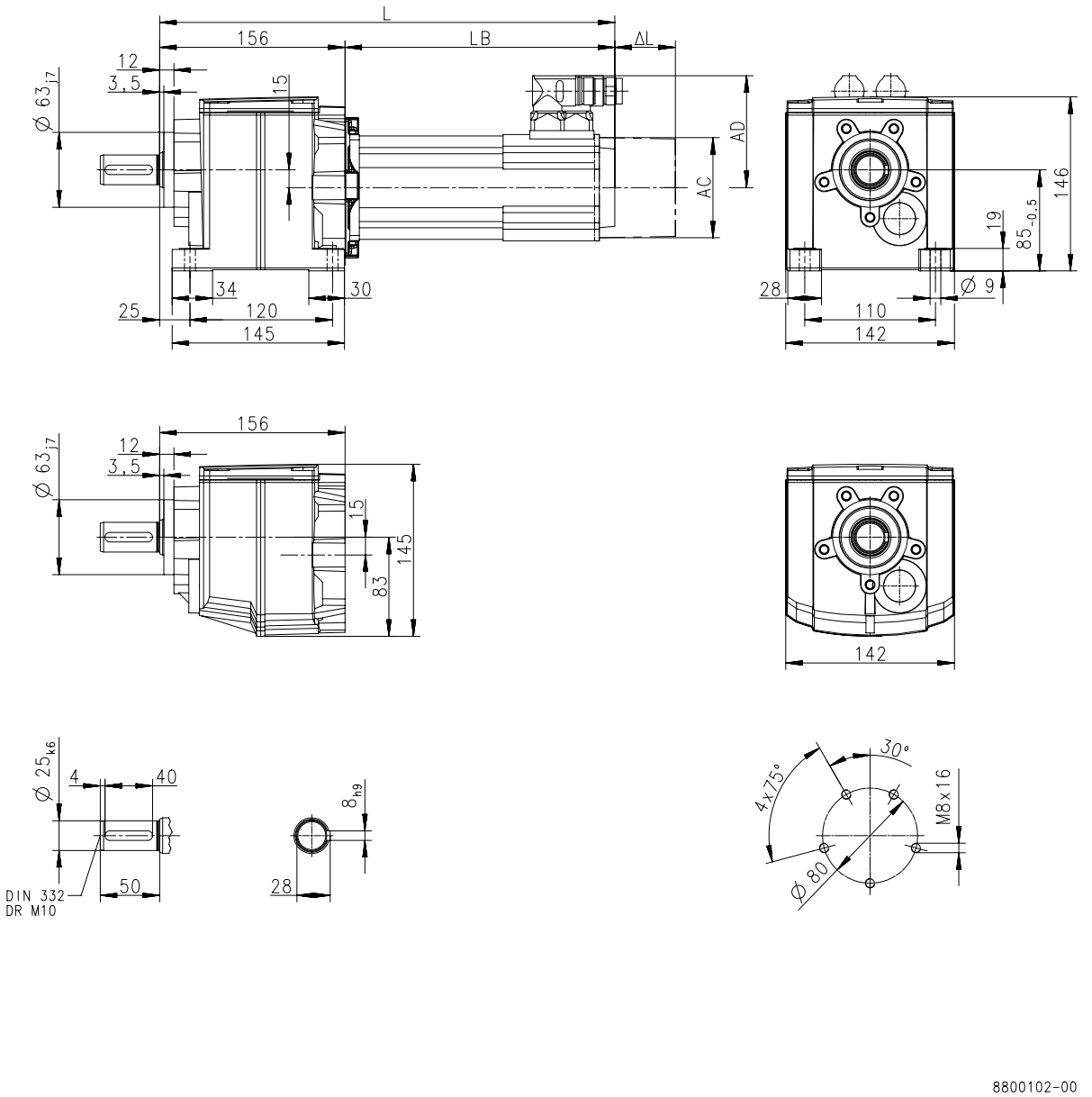

Produkt			MCS						
			06C41	06F41	06I41	09D41	09F38	09H41	09L41
Abmessungen									
Gesamtlänge	**L**	**[mm]**	287	317	347	340	360	380	420
Länge Motor	**LB**	**[mm]**	131.4	161.4	191.4	183.9	203.9	223.9	263.9
Länge Motoranbauten	**Δ L**	**[mm]**	100			71			
Motordurchmesser	**AC**	**[mm]**	86			89			
Abstand Motor/Anschluss	**AD**	**[mm]**	77			89.7			



Dimensions, self-ventilated motors

g500-H140

Dimensions with solid shaft and Flange

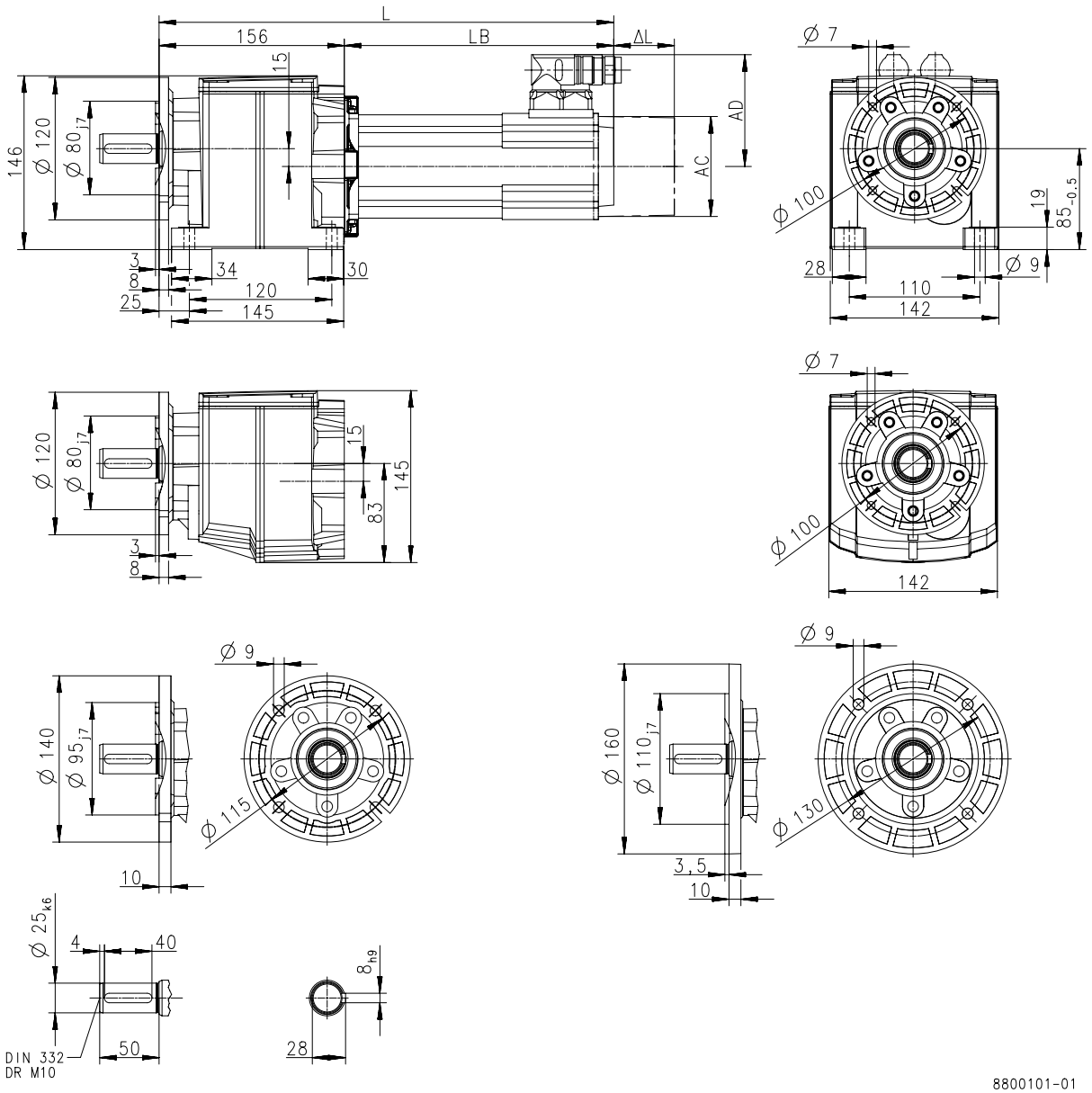

Produkt			MCS						
			06C41	06F41	06I41	09D41	09F38	09H41	09L41
Abmessungen									
Gesamtlänge	**L**	**[mm]**	287	317	347	340	360	380	420
Länge Motor	**LB**	**[mm]**	131.4	161.4	191.4	183.9	203.9	223.9	263.9
Länge Motoranbauten	**Δ L**	**[mm]**	100			71			
Motordurchmesser	**AC**	**[mm]**	86			89			
Abstand Motor/Anschluss	**AD**	**[mm]**	77			89.7			



Dimensions, self-ventilated motors

g500-H210

Dimensions with solid shaft

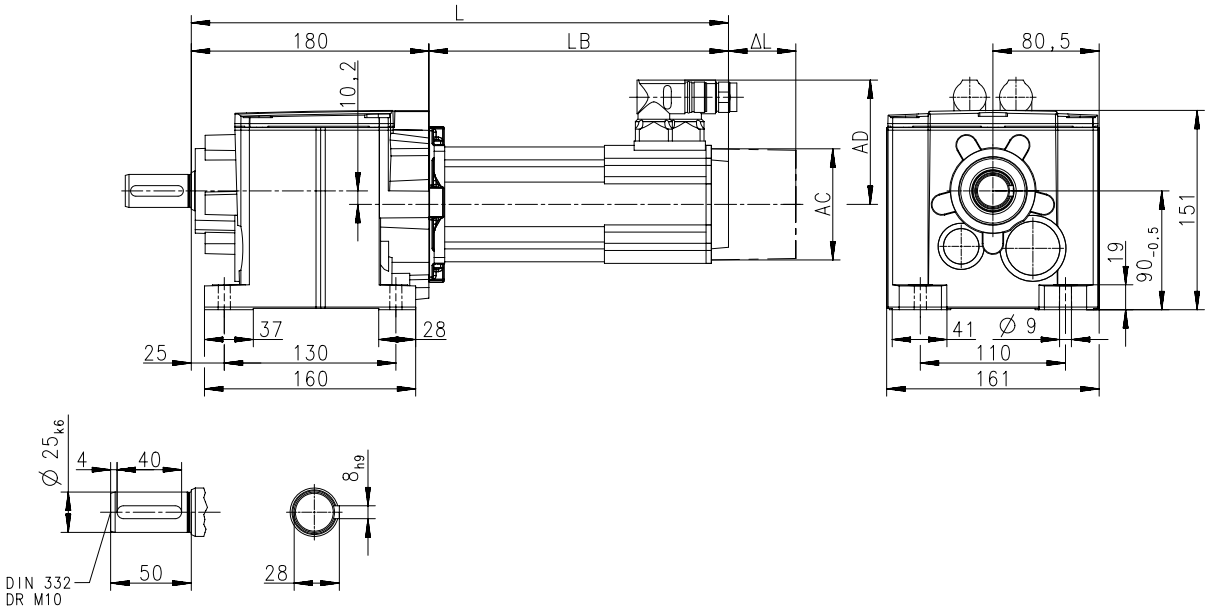

Produkt			MCS					
			06C41	06F41	06I41	09D41	09F38	09H41
Abmessungen								
Gesamtlänge	**L**	**[mm]**	311	341	371	364	384	404
Länge Motor	**LB**	**[mm]**	131.4	161.4	191.4	183.9	203.9	223.9
Länge Motoranbauten	**Δ L**	**[mm]**	100			71		
Motordurchmesser	**AC**	**[mm]**	86			89		
Abstand Motor/Anschluss	**AD**	**[mm]**	77			89.7		



Dimensions, self-ventilated motors

g500-H210

Dimensions with solid shaft

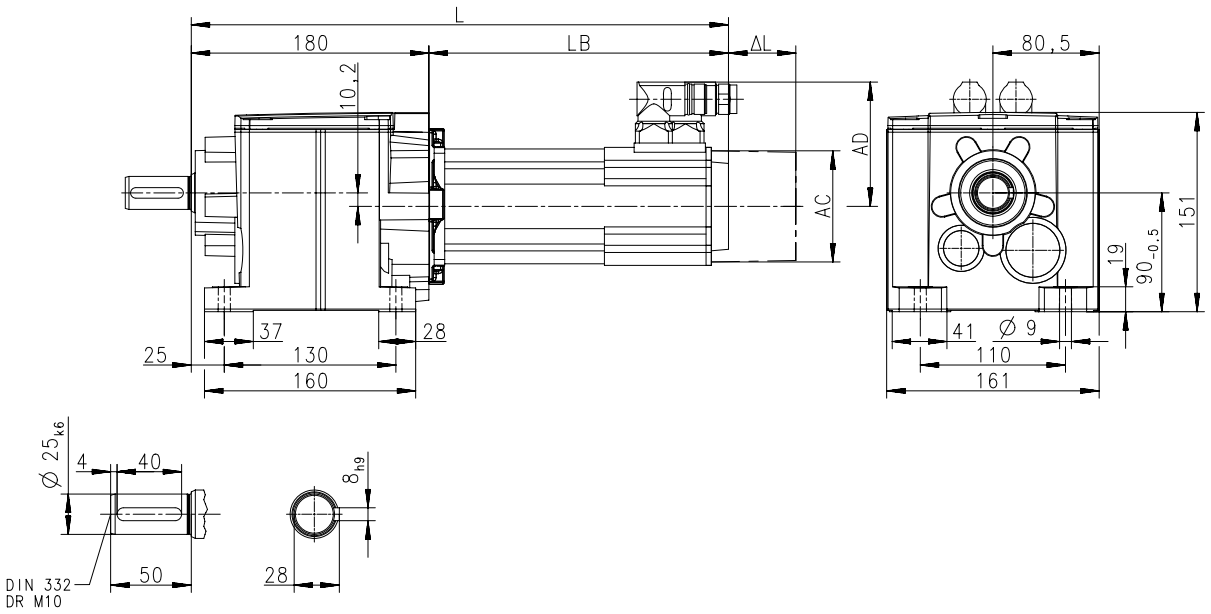

Produkt			MCS						
			09L41	12D20	12D41	12H15	12H30	12H35	12L20
Abmessungen									
Gesamtlänge	**L**	**[mm]**	444	381		421			461
Länge Motor	**LB**	**[mm]**	263.9	200.5		240.5			280.5
Länge Motoranbauten	**Δ L**	**[mm]**	71	69					
Motordurchmesser	**AC**	**[mm]**	89	116					
Abstand Motor/Anschluss	**AD**	**[mm]**	89.7	105					



Dimensions, self-ventilated motors

g500-H210

Dimensions with solid shaft and centering

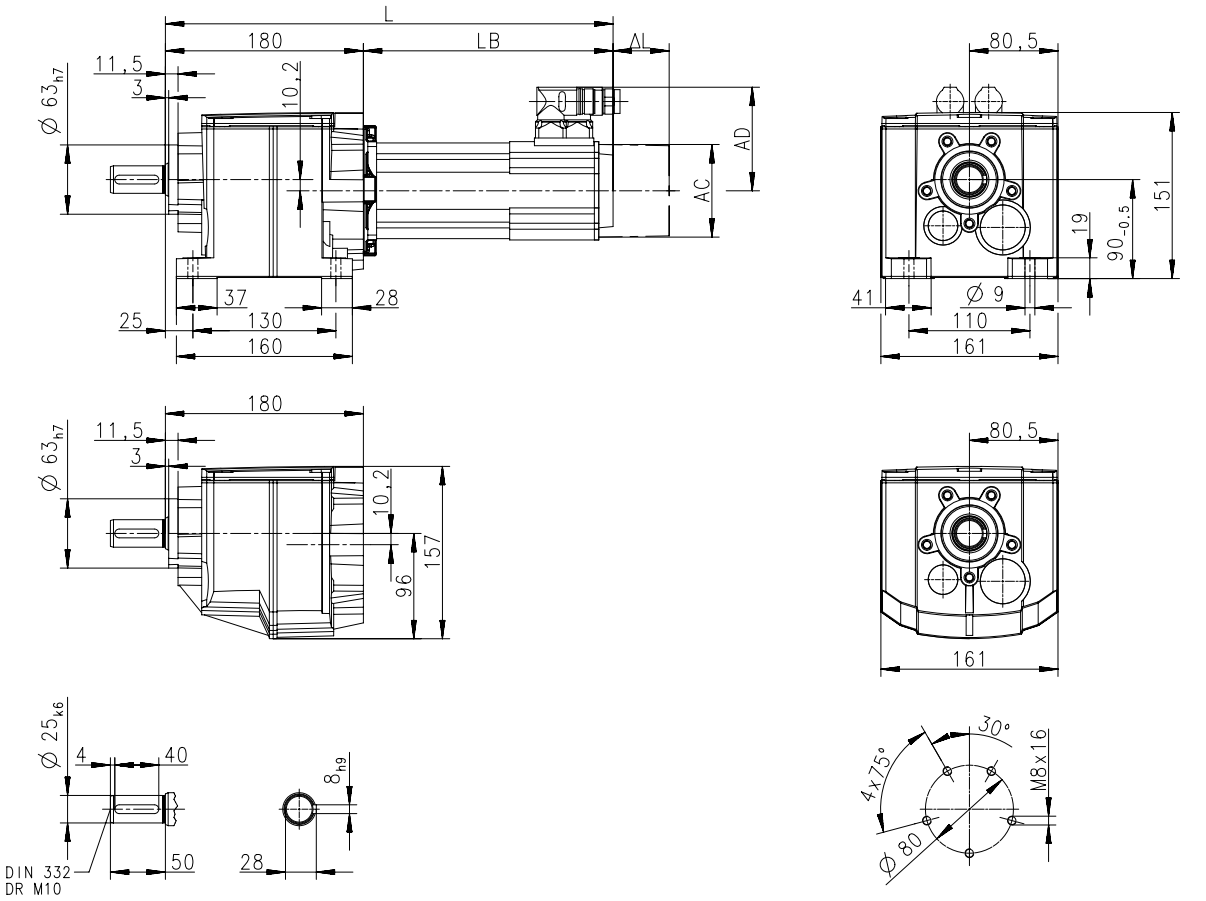

8800114-00

Produkt			MCS					
			06C41	06F41	06I41	09D41	09F38	09H41
Abmessungen								
Gesamtlänge	**L**	**[mm]**	311	341	371	364	384	404
Länge Motor	**LB**	**[mm]**	131.4	161.4	191.4	183.9	203.9	223.9
Länge Motoranbauten	**Δ L**	**[mm]**	100			71		
Motordurchmesser	**AC**	**[mm]**	86			89		
Abstand Motor/Anschluss	**AD**	**[mm]**	77			89.7		



Dimensions, self-ventilated motors

g500-H210

Dimensions with solid shaft and centering

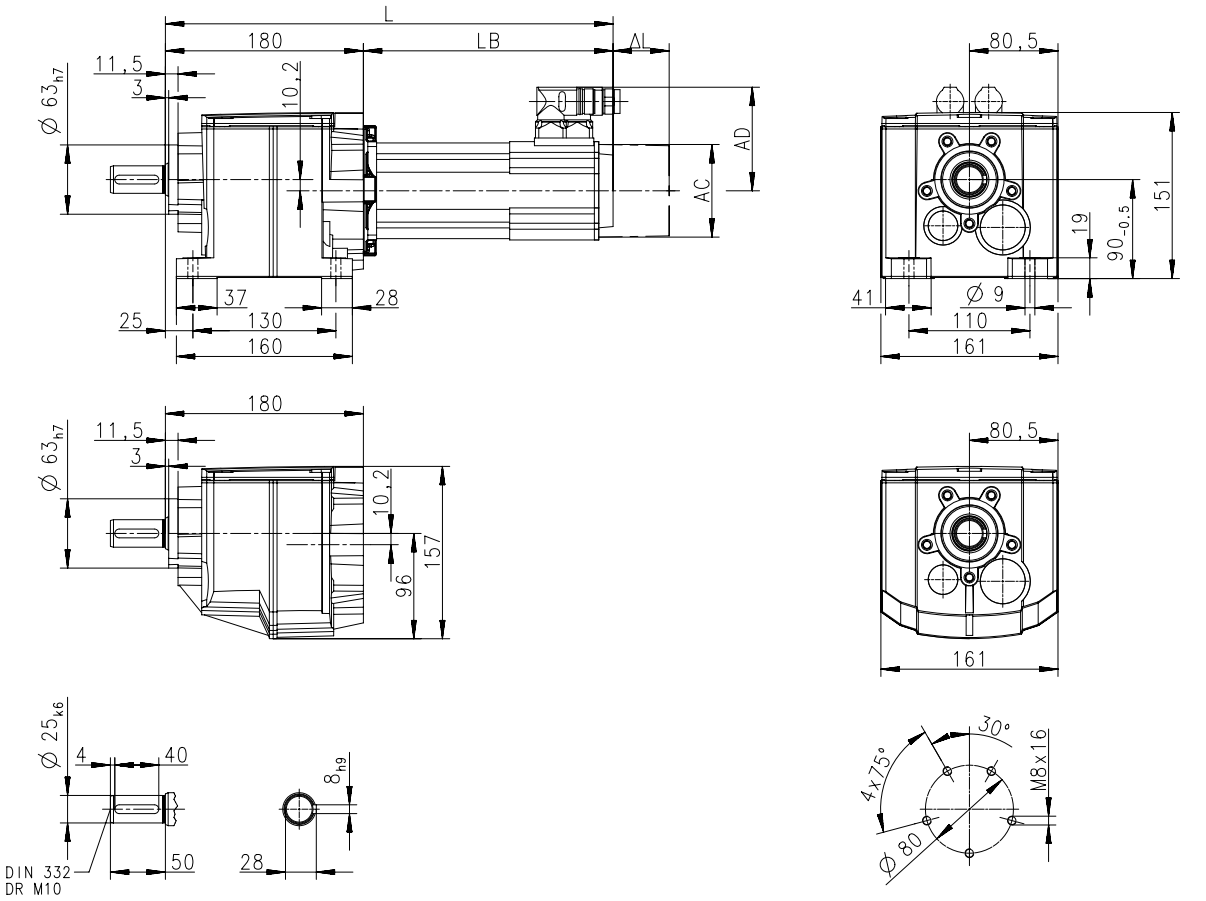

8800114-00

Produkt			MCS						
			09L41	12D20	12D41	12H15	12H30	12H35	12L20
Abmessungen									
Gesamtlänge	**L**	**[mm]**	444	381		421			461
Länge Motor	**LB**	**[mm]**	263.9	200.5		240.5			280.5
Länge Motoranbauten	**Δ L**	**[mm]**	71	69					
Motordurchmesser	**AC**	**[mm]**	89	116					
Abstand Motor/Anschluss	**AD**	**[mm]**	89.7	105					



Dimensions, self-ventilated motors

g500-H210

Dimensions with solid shaft and Flange

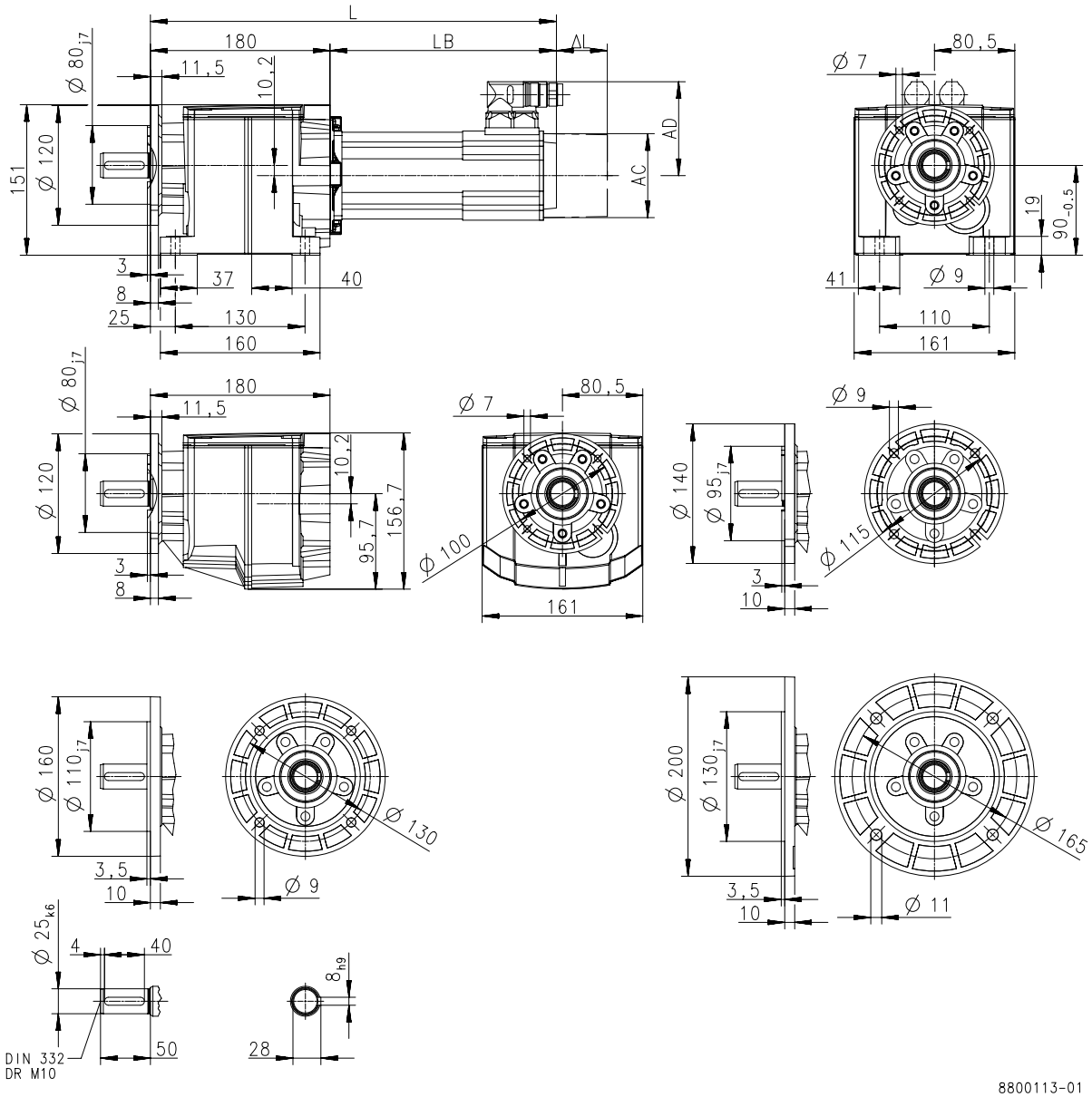

Produkt			MCS					
			06C41	06F41	06I41	09D41	09F38	09H41
Abmessungen								
Gesamtlänge	**L**	**[mm]**	311	341	371	364	384	404
Länge Motor	**LB**	**[mm]**	131.4	161.4	191.4	183.9	203.9	223.9
Länge Motoranbauten	**Δ L**	**[mm]**	100			71		
Motordurchmesser	**AC**	**[mm]**	86			89		
Abstand Motor/Anschluss	**AD**	**[mm]**	77			89.7		



Dimensions, self-ventilated motors

g500-H210

Dimensions with solid shaft and Flange

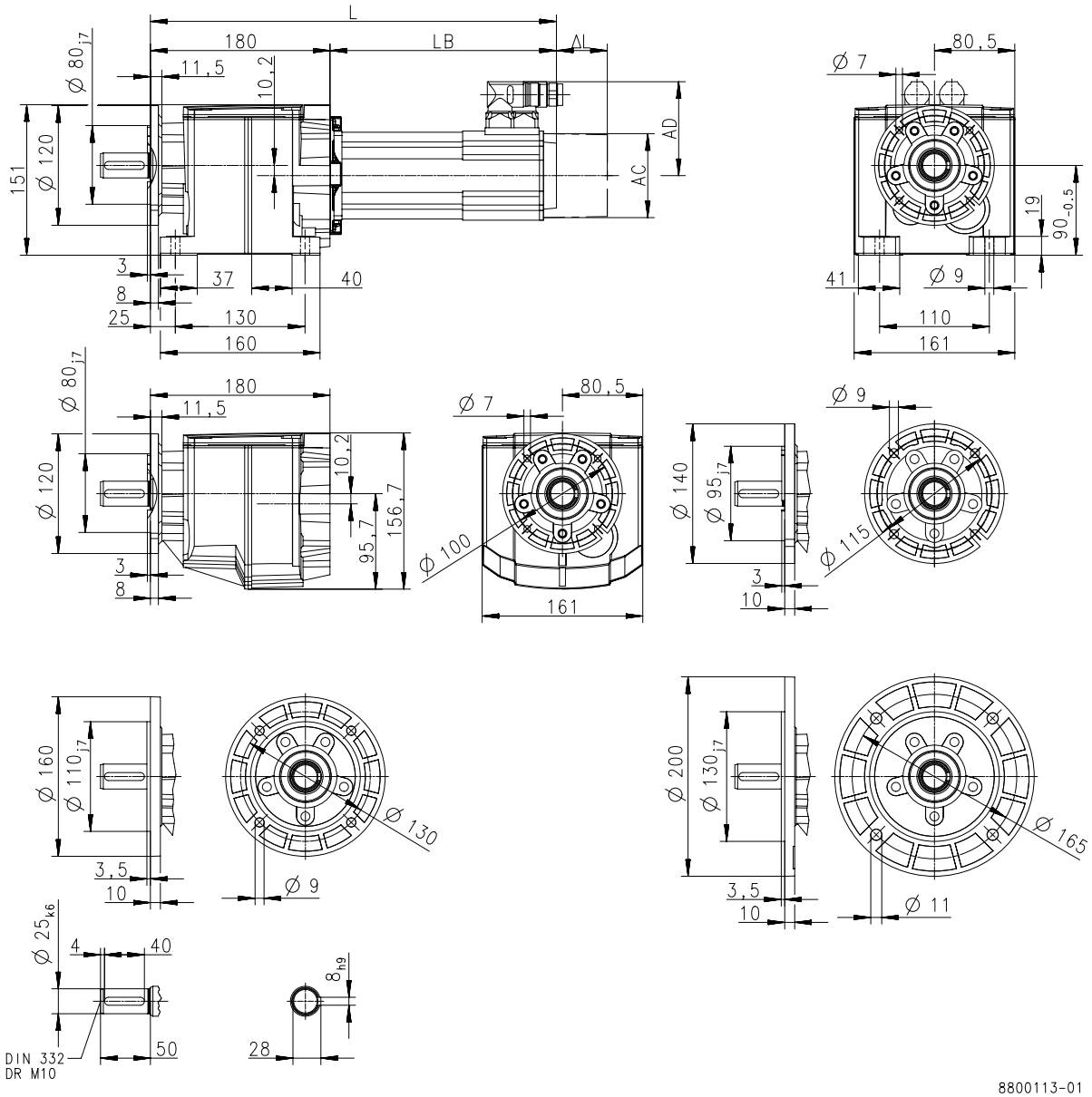

Produkt			MCS						
			09L41	12D20	12D41	12H15	12H30	12H35	12L20
Abmessungen									
Gesamtlänge	**L**	**[mm]**	444	381		421			461
Länge Motor	**LB**	**[mm]**	263.9	200.5		240.5			280.5
Länge Motoranbauten	**Δ L**	**[mm]**	71	69					
Motordurchmesser	**AC**	**[mm]**	89	116					
Abstand Motor/Anschluss	**AD**	**[mm]**	89.7	105					



Dimensions, self-ventilated motors

g500-H320

Dimensions with solid shaft

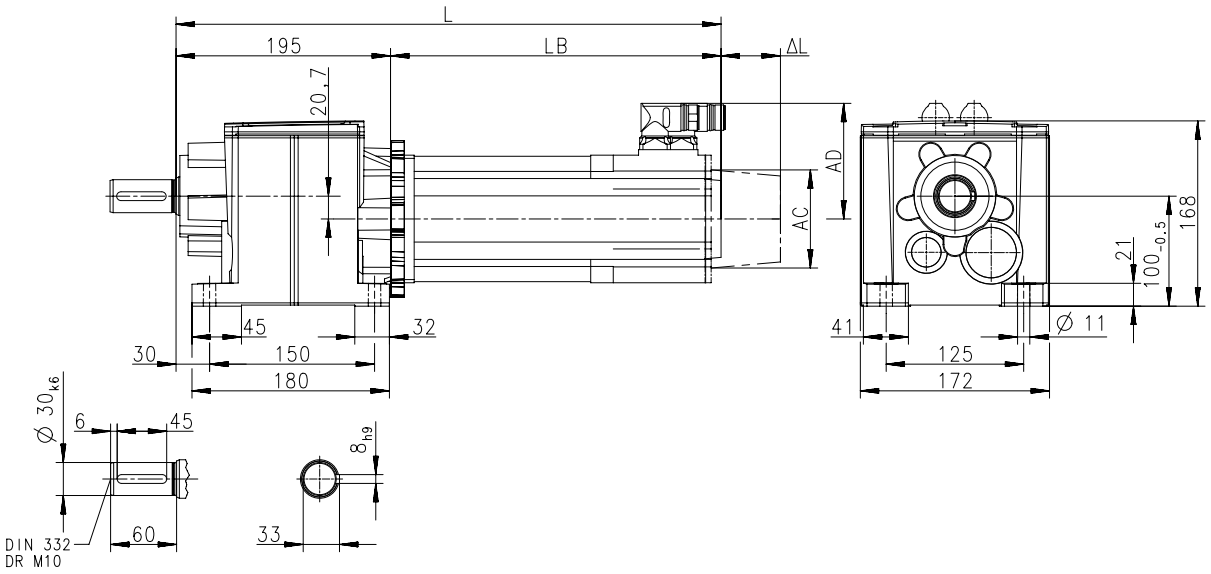

Produkt			MCS							
			06C41	06F41	06I41	09D41	09F38	09H41	09L41	12D20
Abmessungen										
Gesamtlänge	**L**	**[mm]**	331	361	391	384	404	424	464	401
Länge Motor	**LB**	**[mm]**	131.4	161.4	191.4	183.9	203.9	223.9	263.9	200.5
Länge Motoranbauten	**Δ L**	**[mm]**	100			71				69
Motordurchmesser	**AC**	**[mm]**	86			89				116
Abstand Motor/Anschluss	**AD**	**[mm]**	77			89.7				105



Dimensions, self-ventilated motors

g500-H320

Dimensions with solid shaft

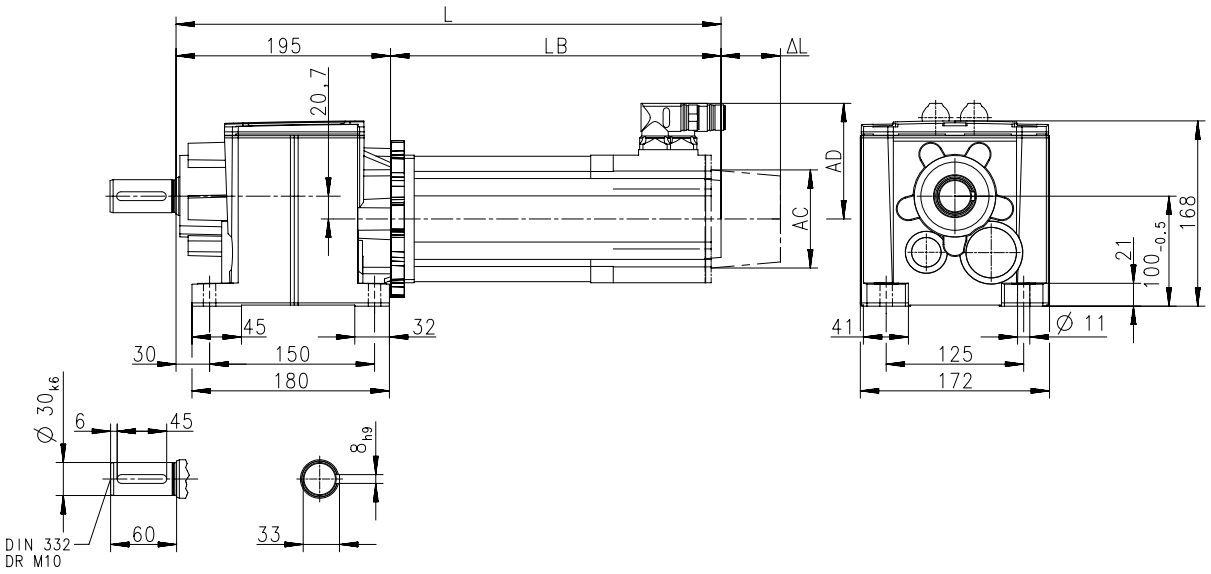

Produkt			MCS								
			12D41	12H15	12H30	12H35	12L20	14D15	14H15	14L15	14P14
Abmessungen											
Gesamtlänge	**L**	**[mm]**	401	441			481	416	456	496	536
Länge Motor	**LB**	**[mm]**	200.5	240.5			280.5	216	256	296	336
Länge Motoranbauten	**Δ L**	**[mm]**	69					78			
Motordurchmesser	**AC**	**[mm]**	116					143			
Abstand Motor/Anschluss	**AD**	**[mm]**	105					116.5			



Dimensions, self-ventilated motors

g500-H320

Dimensions with solid shaft and centering

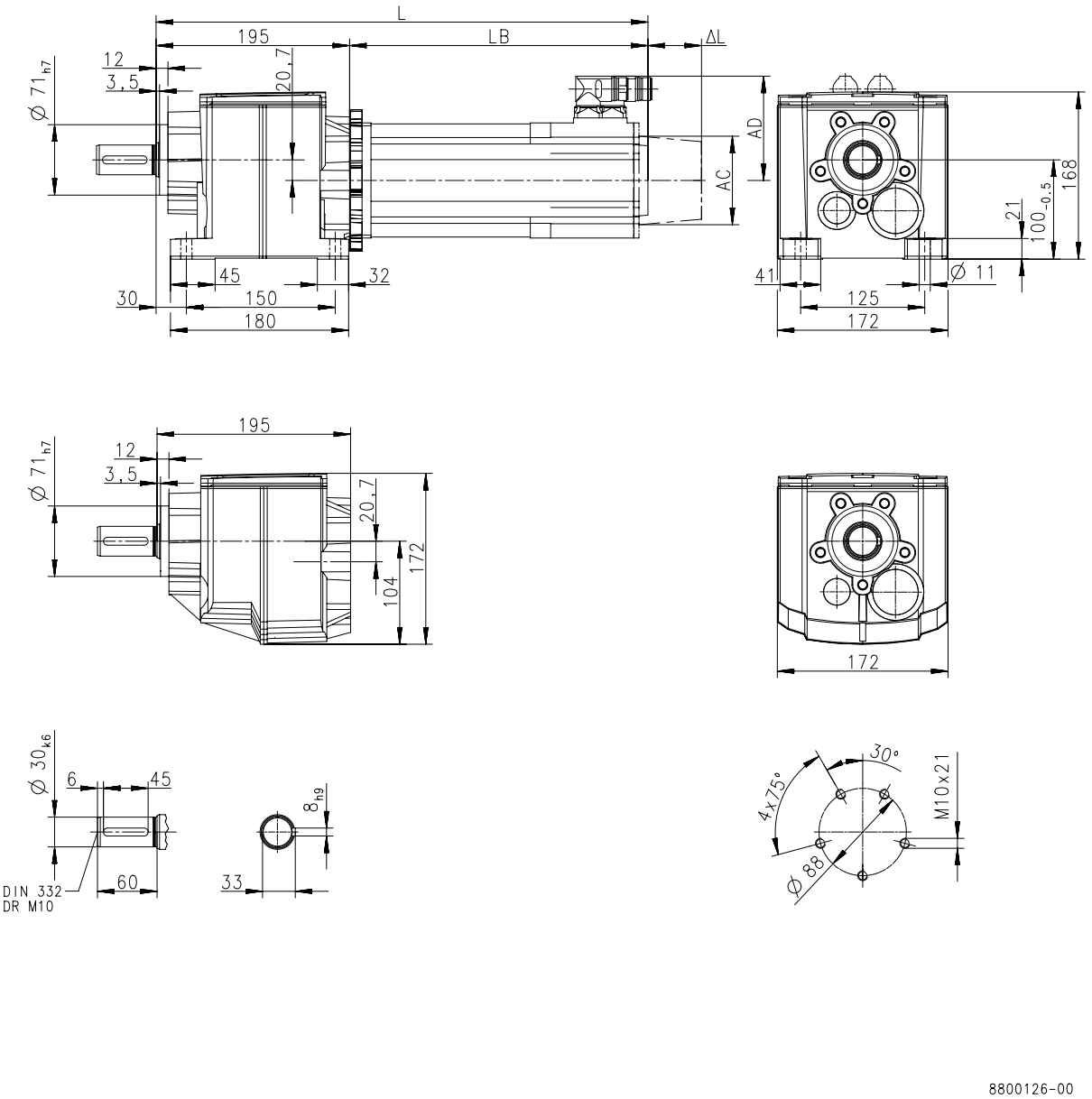

Produkt			MCS							
			06C41	06F41	06I41	09D41	09F38	09H41	09L41	12D20
Abmessungen										
Gesamtlänge	**L**	**[mm]**	331	361	391	384	404	424	464	401
Länge Motor	**LB**	**[mm]**	131.4	161.4	191.4	183.9	203.9	223.9	263.9	200.5
Länge Motoranbauten	**Δ L**	**[mm]**	100			71				69
Motordurchmesser	**AC**	**[mm]**	86			89				116
Abstand Motor/Anschluss	**AD**	**[mm]**	77			89.7				105



Dimensions, self-ventilated motors

g500-H320

Dimensions with solid shaft and centering

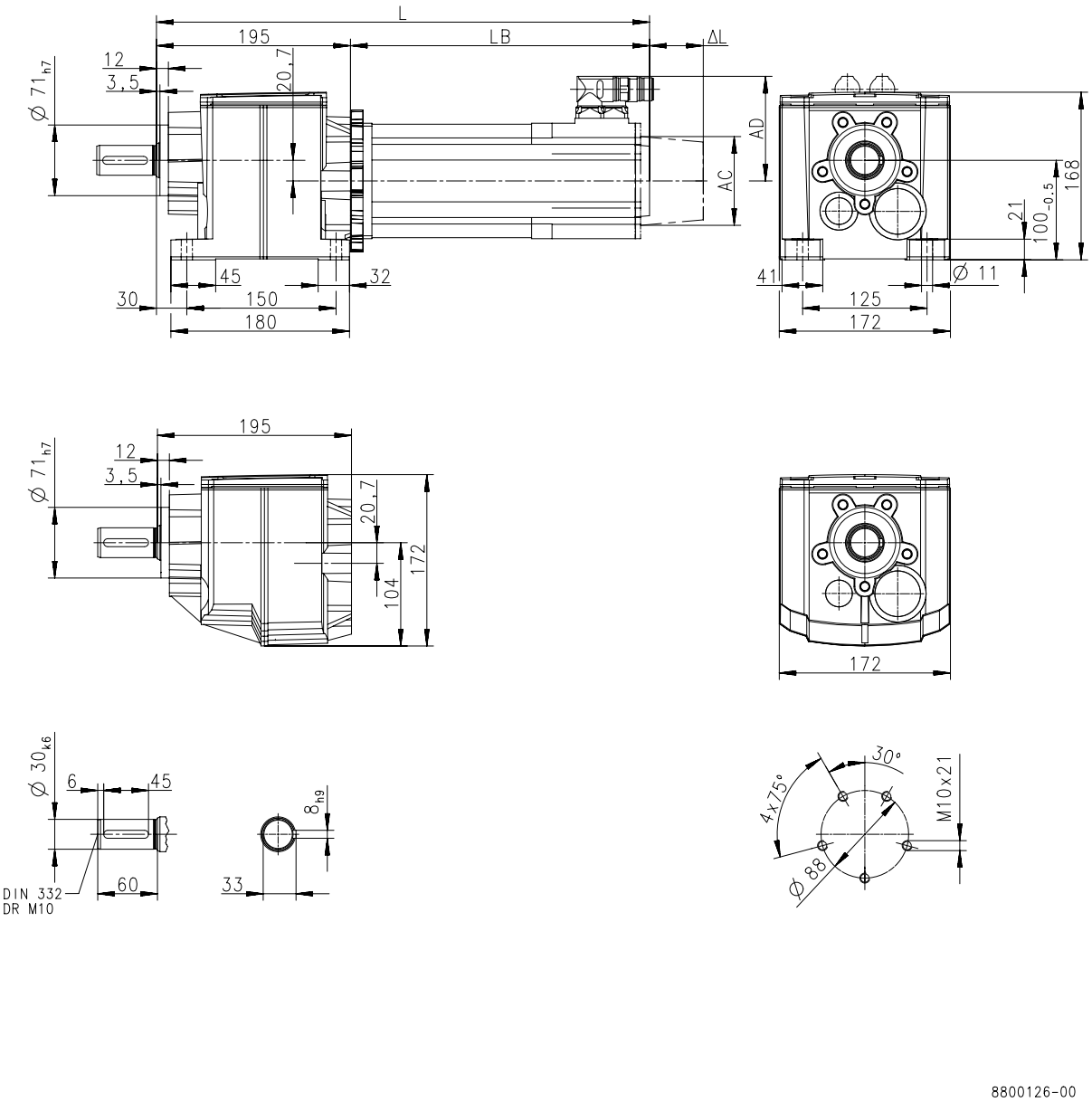

Produkt			MCS								
			12D41	12H15	12H30	12H35	12L20	14D15	14H15	14L15	14P14
Abmessungen											
Gesamtlänge	**L**	**[mm]**	401	441			481	416	456	496	536
Länge Motor	**LB**	**[mm]**	200.5	240.5			280.5	216	256	296	336
Länge Motoranbauten	**Δ L**	**[mm]**	69					78			
Motordurchmesser	**AC**	**[mm]**	116					143			
Abstand Motor/Anschluss	**AD**	**[mm]**	105					116.5			



Dimensions, self-ventilated motors

g500-H320

Dimensions with solid shaft and Flange

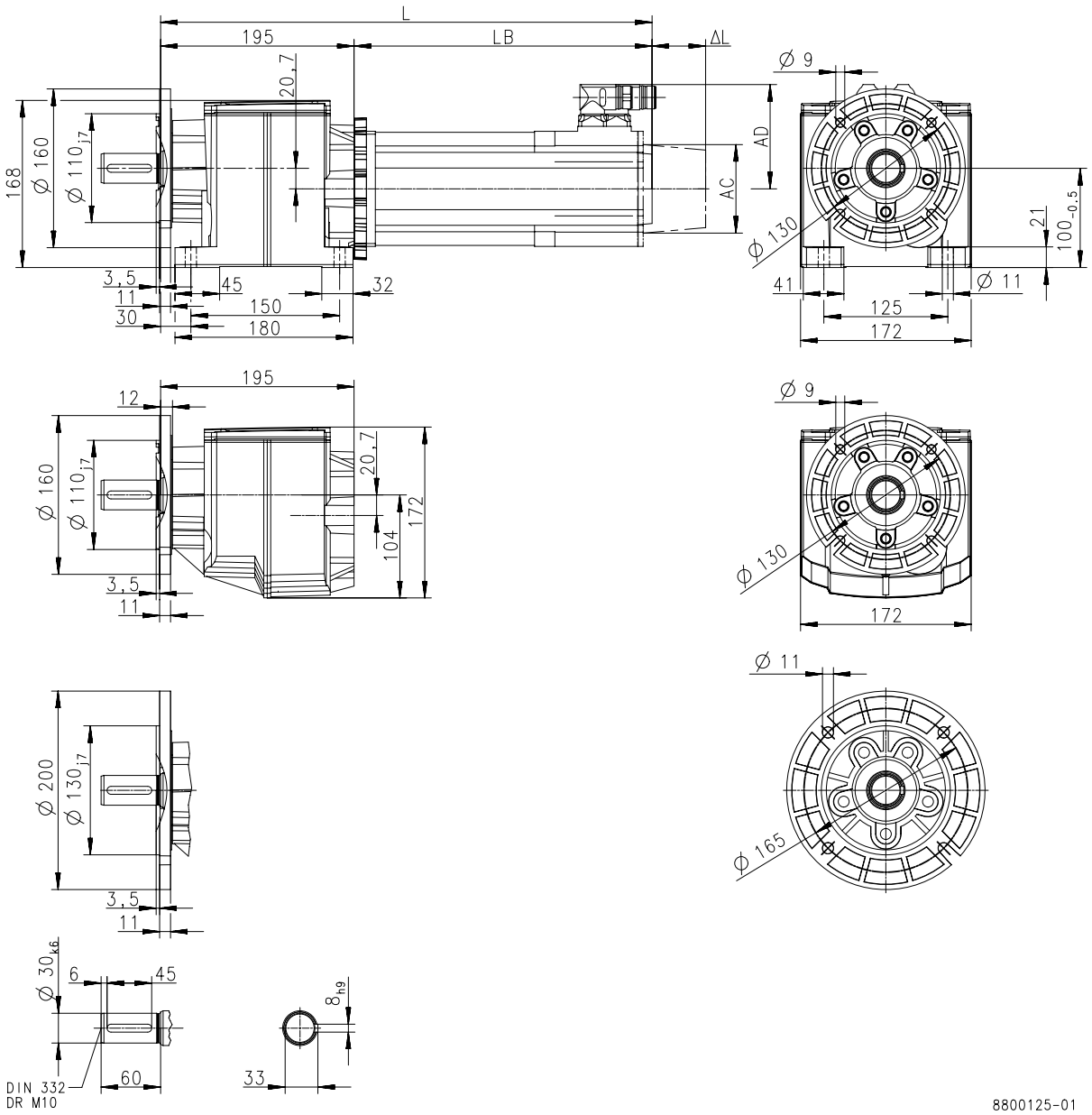

Produkt			MCS							
			06C41	06F41	06I41	09D41	09F38	09H41	09L41	12D20
Abmessungen										
Gesamtlänge	**L**	**[mm]**	331	361	391	384	404	424	464	401
Länge Motor	**LB**	**[mm]**	131.4	161.4	191.4	183.9	203.9	223.9	263.9	200.5
Länge Motoranbauten	**Δ L**	**[mm]**	100			71				69
Motordurchmesser	**AC**	**[mm]**	86			89				116
Abstand Motor/Anschluss	**AD**	**[mm]**	77			89.7				105



Dimensions, self-ventilated motors

g500-H320

Dimensions with solid shaft and Flange

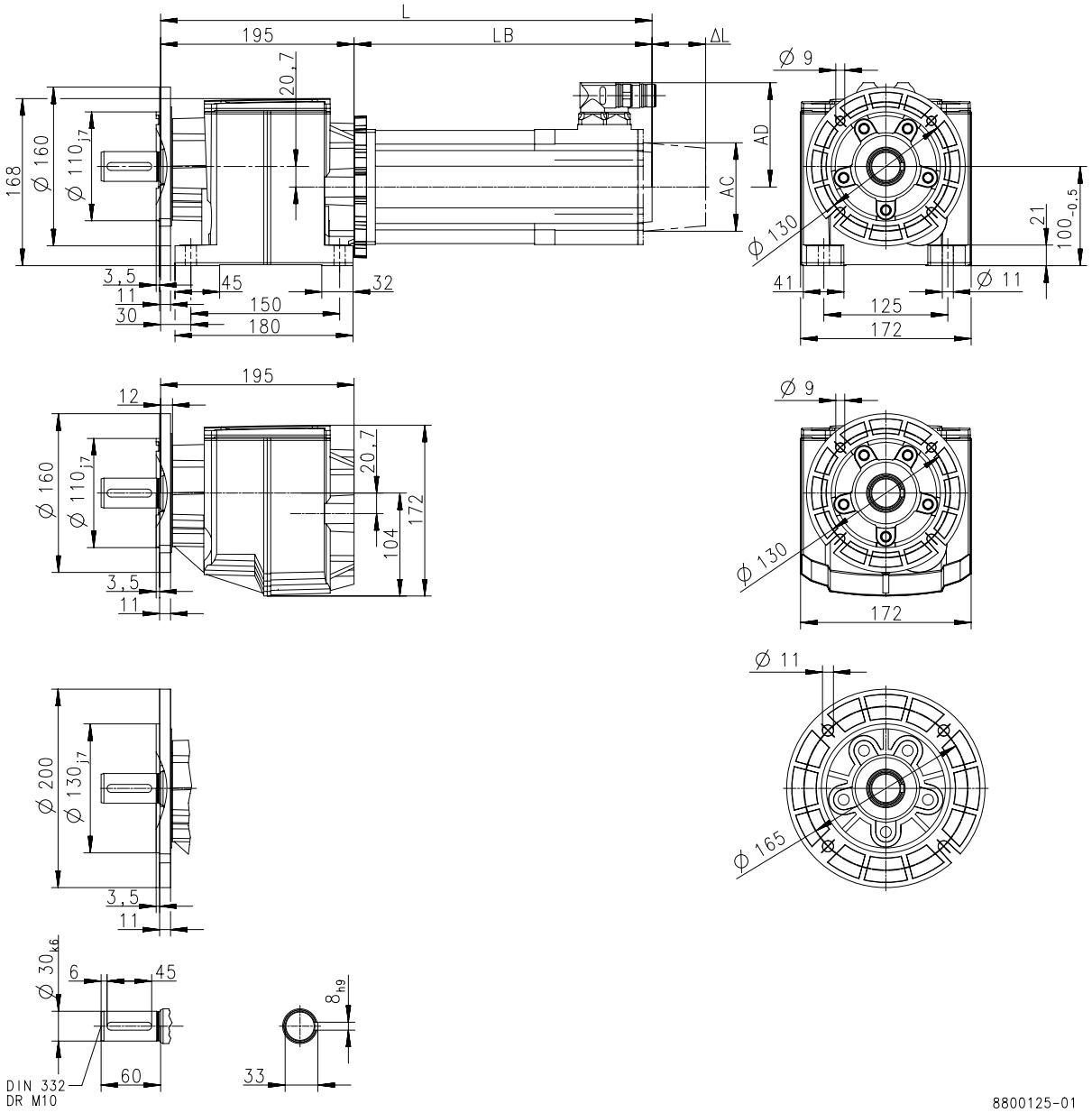

Produkt			MCS								
			12D41	12H15	12H30	12H35	12L20	14D15	14H15	14L15	14P14
Abmessungen											
Gesamtlänge	**L**	**[mm]**	401	441			481	416	456	496	536
Länge Motor	**LB**	**[mm]**	200.5	240.5			280.5	216	256	296	336
Länge Motoranbauten	**Δ L**	**[mm]**	69					78			
Motordurchmesser	**AC**	**[mm]**	116					143			
Abstand Motor/Anschluss	**AD**	**[mm]**	105					116.5			



Dimensions, self-ventilated motors

g500-H450

Dimensions with solid shaft

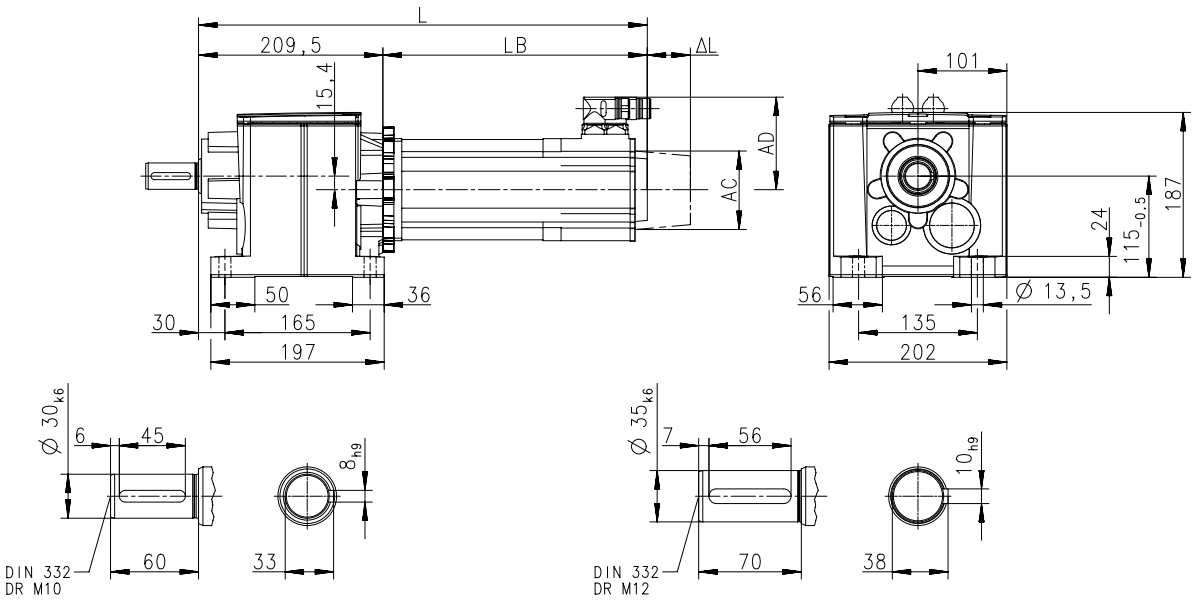

Produkt			MCS								
			06C41	06F41	06I41	09D41	09F38	09H41	09L41	12D20	12D41
Abmessungen											
Gesamtlänge	**L**	**[mm]**	341	371	401	393	413	433	473	410	
Länge Motor	**LB**	**[mm]**	131.4	161.4	191.4	183.9	203.9	223.9	263.9	200.5	
Länge Motoranbauten	**Δ L**	**[mm]**	100			71				69	
Motordurchmesser	**AC**	**[mm]**	86			89				116	
Abstand Motor/Anschluss	**AD**	**[mm]**	77			89.7				105	



Dimensions, self-ventilated motors

g500-H450

Dimensions with solid shaft

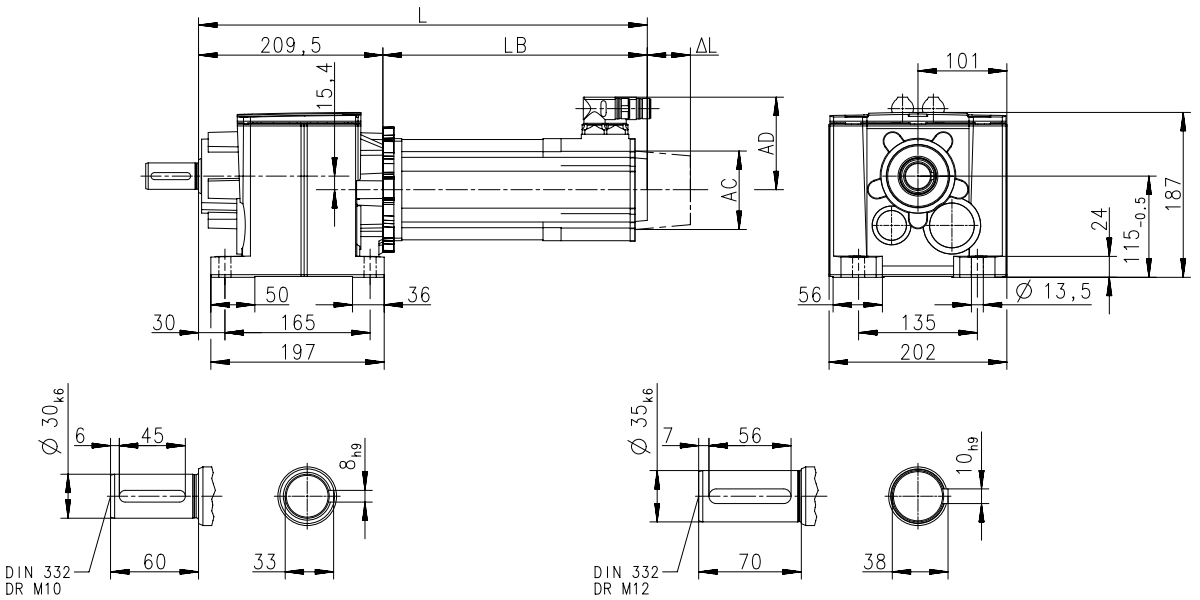

Produkt			MCS									
			12H15	12H30	12H35	12L20	12L41	14D15	14H15	14H32	14L15	14P14
Abmessungen												
Gesamtlänge	**L**	**[mm]**	450			490		426	466		506	546
Länge Motor	**LB**	**[mm]**	240.5			280.5		216	256		296	336
Länge Motoranbauten	**Δ L**	**[mm]**	69					78				
Motordurchmesser	**AC**	**[mm]**	116					143				
Abstand Motor/Anschluss	**AD**	**[mm]**	105					116.5				



Dimensions, self-ventilated motors

g500-H450

Dimensions with solid shaft and centering

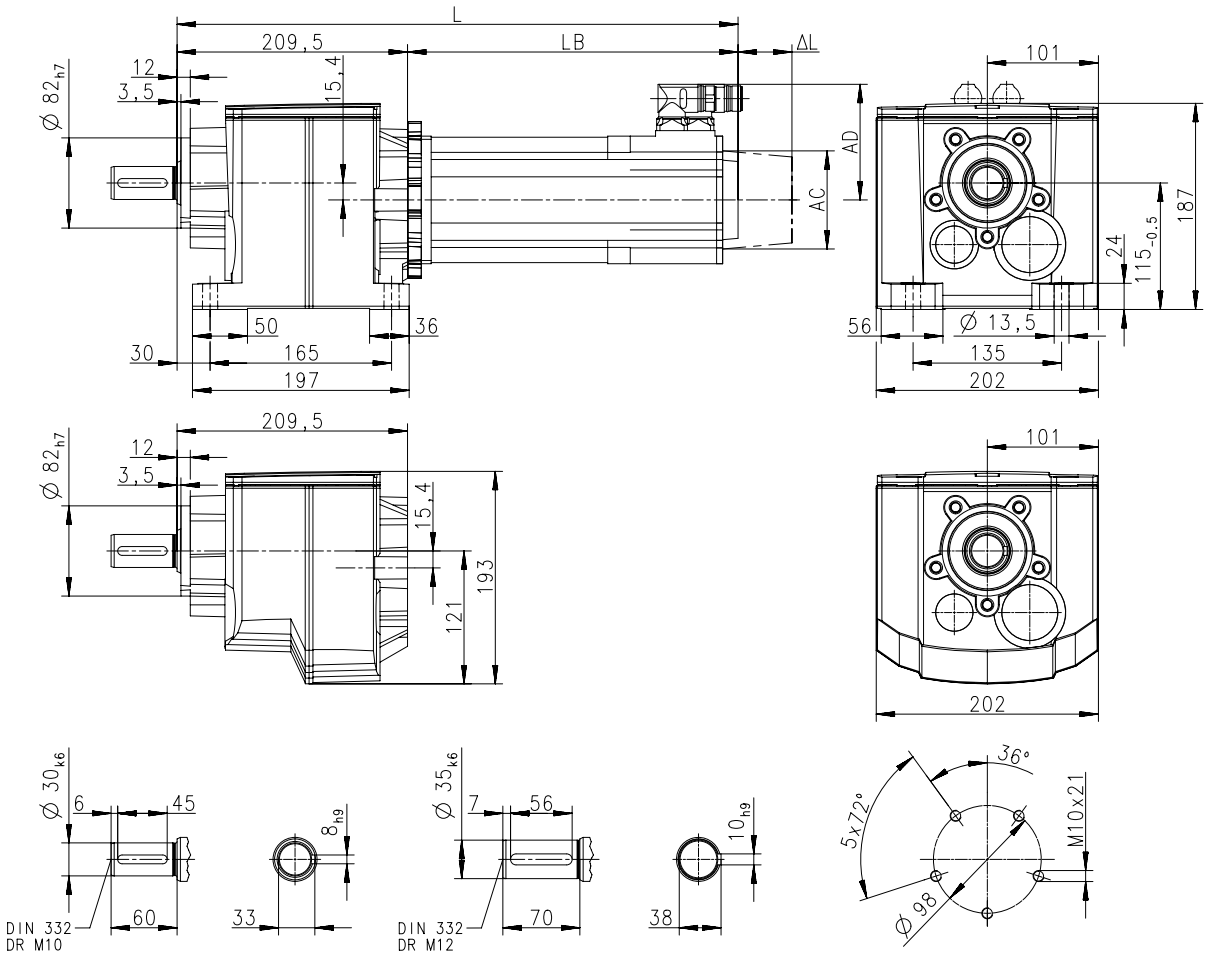

Produkt			MCS								
			06C41	06F41	06I41	09D41	09F38	09H41	09L41	12D20	12D41
Abmessungen											
Gesamtlänge	**L**	**[mm]**	341	371	401	393	413	433	473	410	
Länge Motor	**LB**	**[mm]**	131.4	161.4	191.4	183.9	203.9	223.9	263.9	200.5	
Länge Motoranbauten	**Δ L**	**[mm]**	100			71				69	
Motordurchmesser	**AC**	**[mm]**	86			89				116	
Abstand Motor/Anschluss	**AD**	**[mm]**	77			89.7				105	

6.3



Dimensions, self-ventilated motors

g500-H450

Dimensions with solid shaft and centering

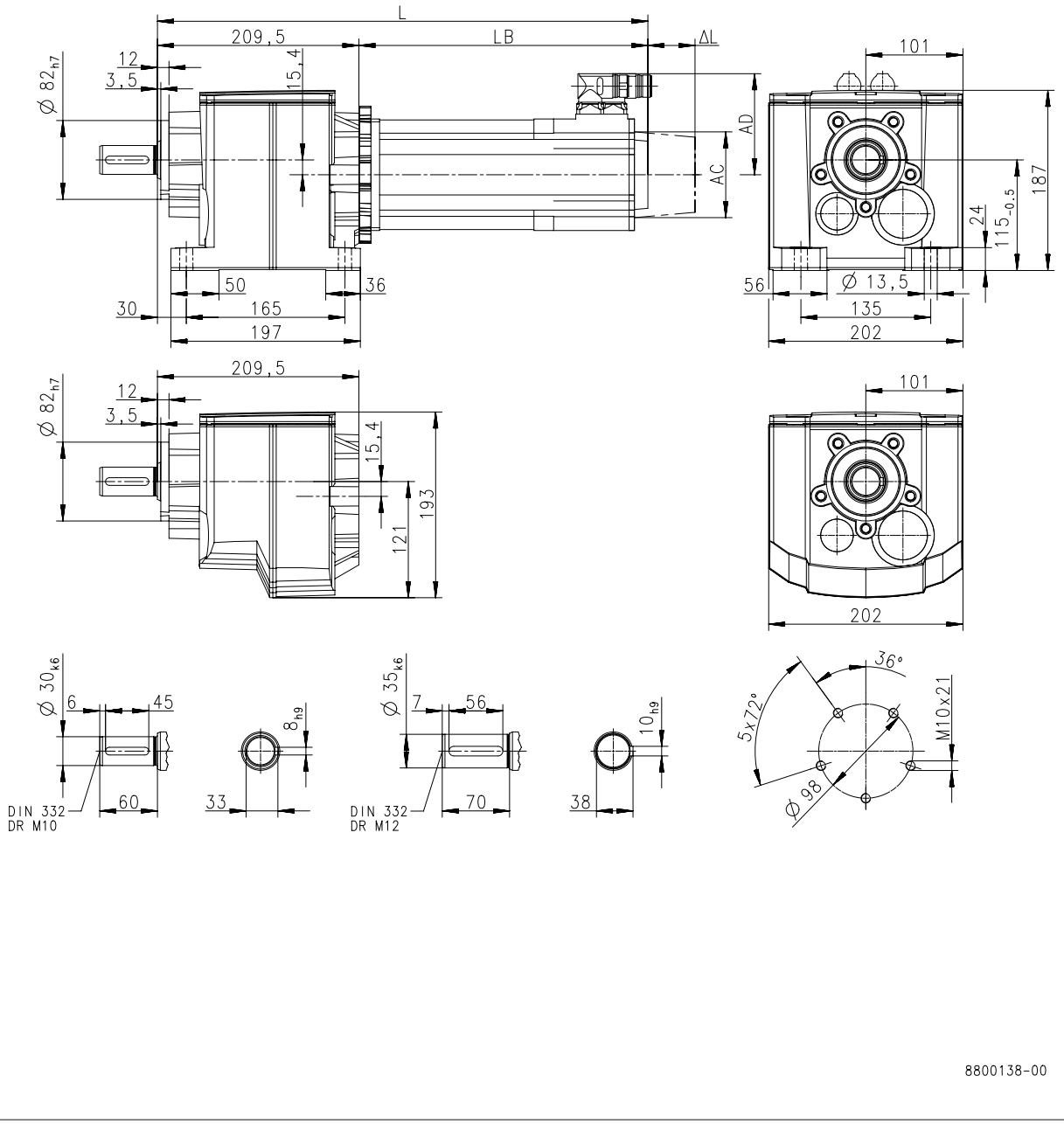

Produkt			MCS									
			12H15	12H30	12H35	12L20	12L41	14D15	14H15	14H32	14L15	14P14
Abmessungen												
Gesamtlänge	**L**	**[mm]**	450			490		426	466		506	546
Länge Motor	**LB**	**[mm]**	240.5			280.5		216	256		296	336
Länge Motoranbauten	**Δ L**	**[mm]**	69					78				
Motordurchmesser	**AC**	**[mm]**	116					143				
Abstand Motor/Anschluss	**AD**	**[mm]**	105					116.5				



Dimensions, self-ventilated motors

g500-H450

Dimensions with solid shaft and Flange

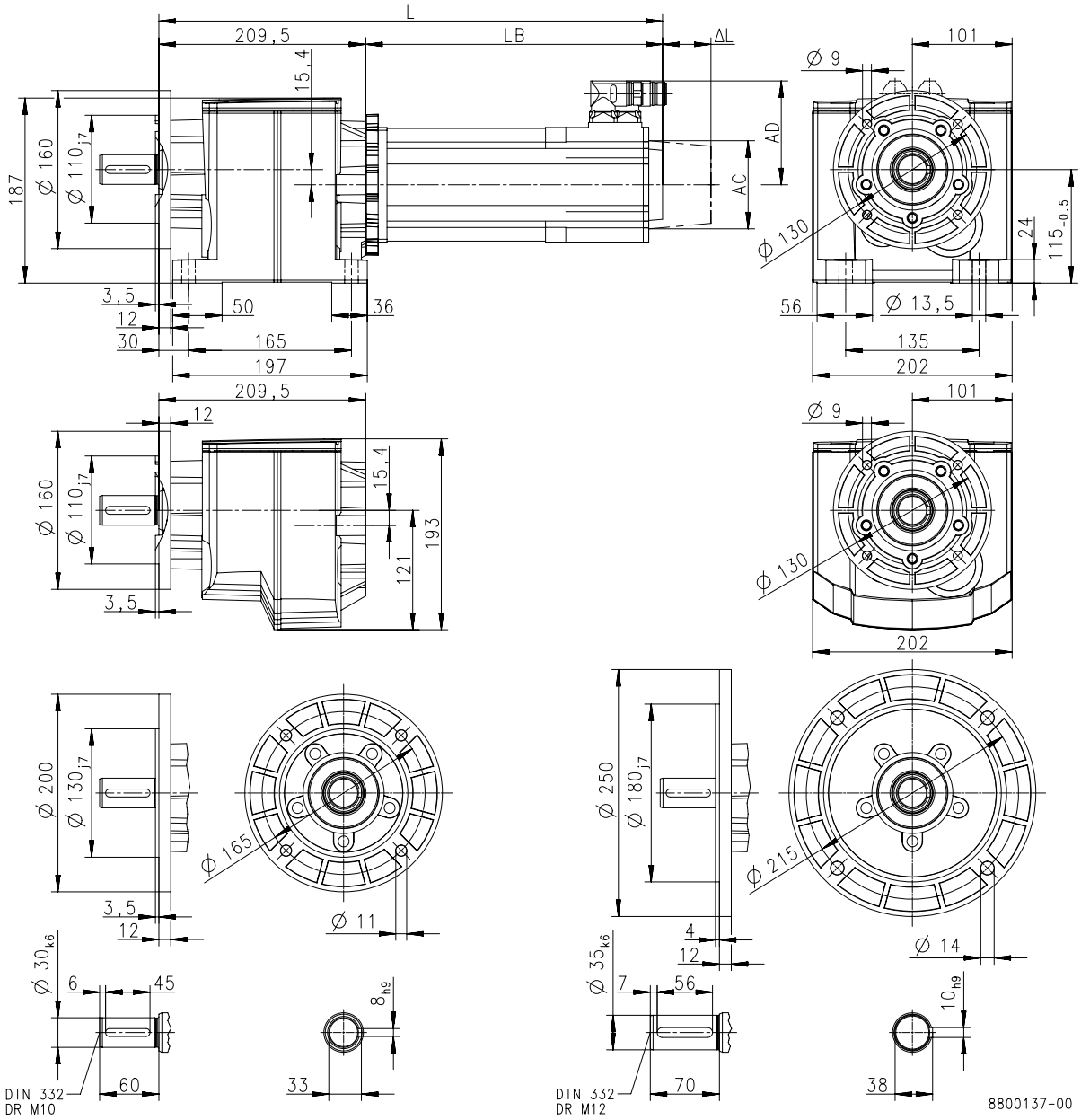

Produkt			MCS								
			06C41	06F41	06I41	09D41	09F38	09H41	09L41	12D20	12D41
Abmessungen											
Gesamtlänge	**L**	**[mm]**	341	371	401	393	413	433	473	410	
Länge Motor	**LB**	**[mm]**	131.4	161.4	191.4	183.9	203.9	223.9	263.9	200.5	
Länge Motoranbauten	**Δ L**	**[mm]**	100			71				69	
Motordurchmesser	**AC**	**[mm]**	86			89				116	
Abstand Motor/Anschluss	**AD**	**[mm]**	77			89.7				105	

6.3



Dimensions, self-ventilated motors

g500-H450

Dimensions with solid shaft and Flange

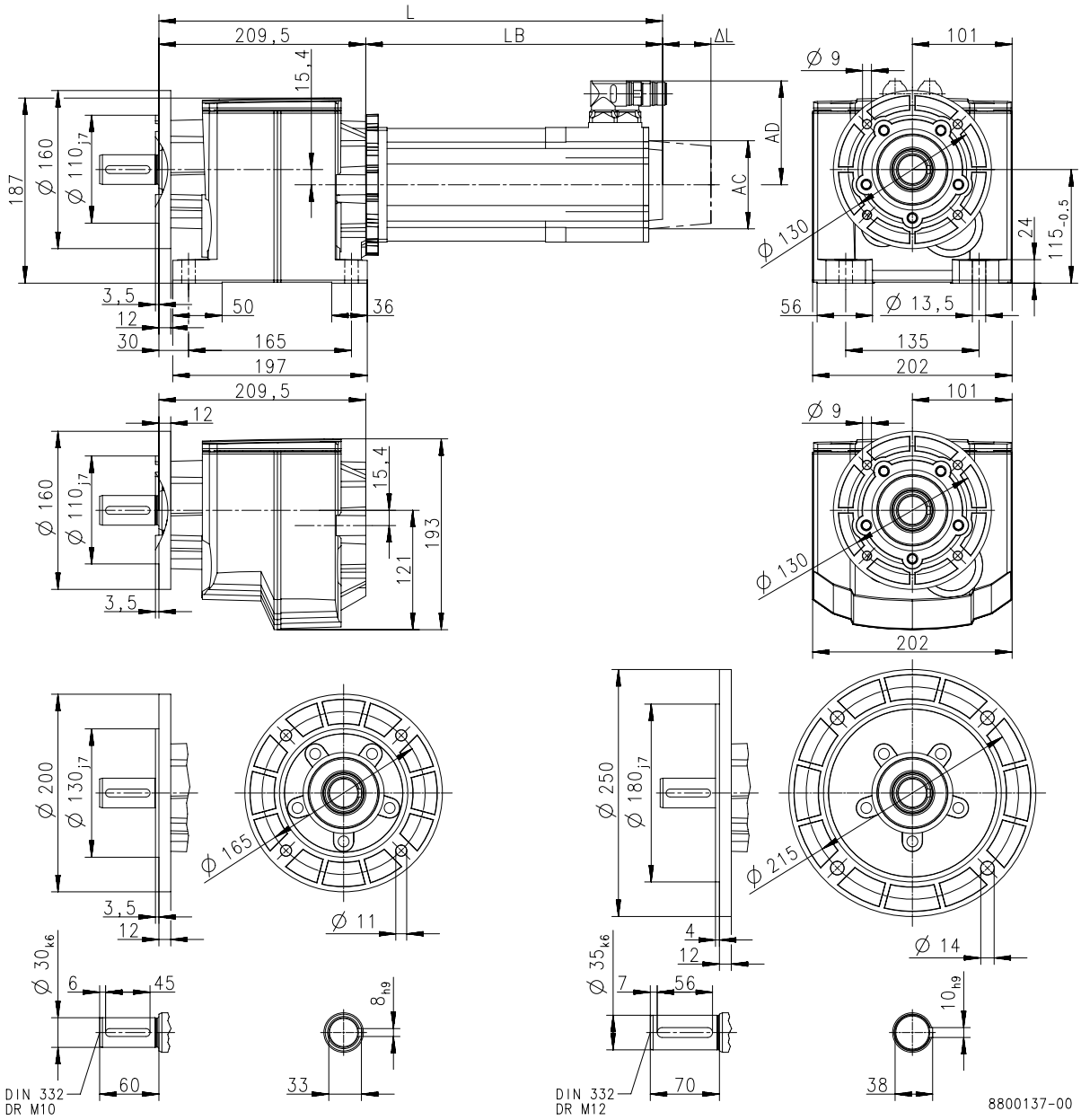

Produkt			MCS									
			12H15	12H30	12H35	12L20	12L41	14D15	14H15	14H32	14L15	14P14
Abmessungen												
Gesamtlänge	**L**	**[mm]**	450			490		426	466		506	546
Länge Motor	**LB**	**[mm]**	240.5			280.5		216	256		296	336
Länge Motoranbauten	**Δ L**	**[mm]**	69					78				
Motordurchmesser	**AC**	**[mm]**	116					143				
Abstand Motor/Anschluss	**AD**	**[mm]**	105					116.5				



Weights, self-ventilated motors

2-stage gearboxes

				MCS							
				06C41	06F41	06I41	09D41	09F38	09H41	09L41	12D20 12D41
g500	-H45	m	[kg]	3.5	3.9	4.6					
	-H100	m	[kg]	5.3	5.7	6.4	7.7	8.6	9.5	11	
	-H140	m	[kg]	6.4	6.8	7.5	8.8	9.7	11	12	
	-H210	m	[kg]		8.1	8.8	10	11	12	14	12
	-H320	m	[kg]		10	11	12	13	14	16	14
	-H450	m	[kg]		13	14	15	16	17	19	17

				MCS							
				12H15 12H30 12H35	12L20	12L41	14D15	14H15	14H32	14L15	14P14
g500	-H210	m	[kg]	16	19						
	-H320	m	[kg]	17	20		19	24		28	33
	-H450	m	[kg]	20	24		22	27		31	36

3-stage gearboxes

				MCS						
				06C41	06F41	06I41	09D41	09F38	09H41	09L41
g500	-H210	m	[kg]	7.9	8.3	9.0	10	11		
	-H320	m	[kg]	9.8	10	11	12	13	14	16
	-H450	m	[kg]	13	14		16		17	19



Surface and corrosion protection

For optimum protection of geared motors against ambient conditions, the surface and corrosion protection system (OKS) offers tailor-made solutions.

Various surface coatings combined with other protective measures ensure that the geared motors operate reliably even at high air humidity, in outdoor installations or in the presence of atmospheric impurities. Any colour from the RAL Classic collection can be chosen for the top coat. The geared motors are also available unpainted (no surface and corrosion protection).

Surface and corrosion protection	Applications	Measures
OKS-G (primed)	• Dependent on subsequent top coat applied	• 2K PUR priming coat (grey) • Zinc-coated screws • Rust-free breather elements Optional measures • Stainless steel nameplate
OKS-S (small)	• Standard applications • Internal installation in heated buildings • Air humidity up to 90%	• Surface coating as per corrosivity category C1 (in line with EN 12944-2) • Zinc-coated screws • Rust-free breather elements Optional measures • Stainless steel nameplate
OKS-M (medium)	• Internal installation in non-heated buildings • Covered, protected external installation • Air humidity up to 95%	• Surface coating as per corrosivity category C2 (in line with EN 12944-2) • Zinc-coated screws • Rust-free breather elements Optional measures • Stainless steel shaft • Stainless steel nameplate • Rust-free shrink disc (on request)
OKS-L (large)	• External installation • Air humidity above 95% • Chemical industry plants • Food industry	• Surface coating as per corrosivity category C3 (in line with EN 12944-2) • Blower cover and B end shield additionally primed • Cable glands with gaskets • Corrosion-resistant brake with cover ring, stainless friction plate, and chrome-plated armature plate (on request) • All screws/screw plugs zinc-coated • Stainless breather elements • Threaded holes that are not used are closed by means of plastic plugs Optional measures • Sealed recesses on motor (on request) • Stainless steel shaft • Stainless steel nameplate • Rust-free shrink disc (on request) • Additional priming coat on cast iron fan • Oil expansion tank and torque plates painted separately and supplied loose



Surface and corrosion protection

Structure of surface coating

Surface and corrosion protection	Corrosivity category	Surface coating	Colour
	DIN EN ISO 12944-2	Structure	
Without OKS(uncoated)		Dipping primed gearbox	
OKS-G (primed)		Dipping primed gearbox 2K PUR priming coat	
OKS-S (small)	C1	Dipping primed gearbox 2K-PUR top coat	Standard: RAL 7012 Optional: RAL Classic
OKS-M (medium)	C2	Dipping primed gearbox 2K PUR priming coat 2K-PUR top coat	
OKS-L (large)	C3		



g500-H helical gearbox

45 to 450 Nm

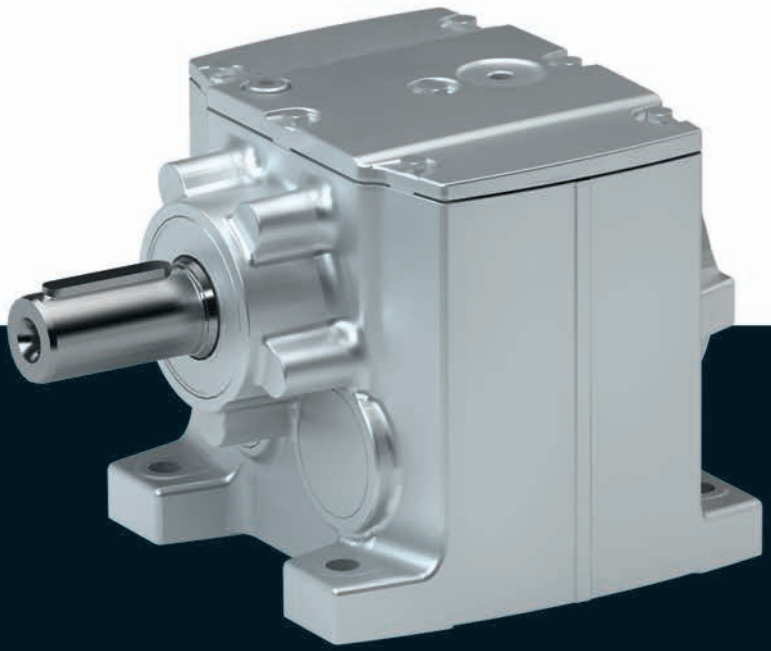

g500-H helical gearbox

Contents

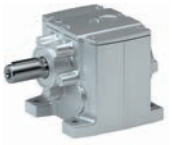

General information	List of abbreviations	6.3 - 5
	Product information	6.3 - 6
	Equipment	6.3 - 7
	The gearbox kit	6.3 - 8
	Functions and features	6.3 - 10
	Lubricants	6.3 - 11
	Ventilation	6.3 - 12
Technical data	Permissible radial and axial forces at output	6.3 - 15
	Moments of inertia	6.3 - 17
	Additional weights for gearboxes	6.3 - 20

Contents

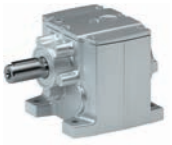

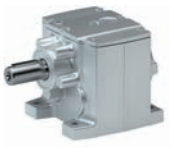

List of abbreviations

$F_{ax,max}$	[N]	Max. axial force
$F_{rad,max}$	[N]	Max. radial force
i		Ratio
J	[kgcm²]	Moment of inertia
m	[kg]	Mass

g500-H helical gearbox

General information

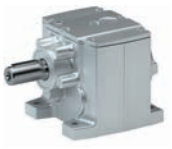

Product information

The robust helical gearboxes feature high permissible radial forces, closely stepped ratios and a low backlash. They are available in 2-pole and 3-pole design with a torque up to 450 Nm and a ratio of up to i= 370.

Versions

- Fine-scaling of size / torque provides for an optimum machine adaptation
- Standardised shaft and flange dimensions for an easy machine integration
- High efficiency

The product name

Gearbox type	Product range		Design	Rated torque [Nm]	Product
Helical gearbox	g500	-	H	45	g500-H45
				100	g500-H100
				140	g500-H140
				210	g500-H210
				320	g500-H320
				450	g500-H450

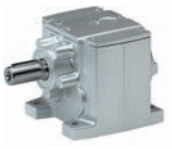

Equipment

Overview

The equipment includes all the options available as standard and all the built-on accessories of the product.

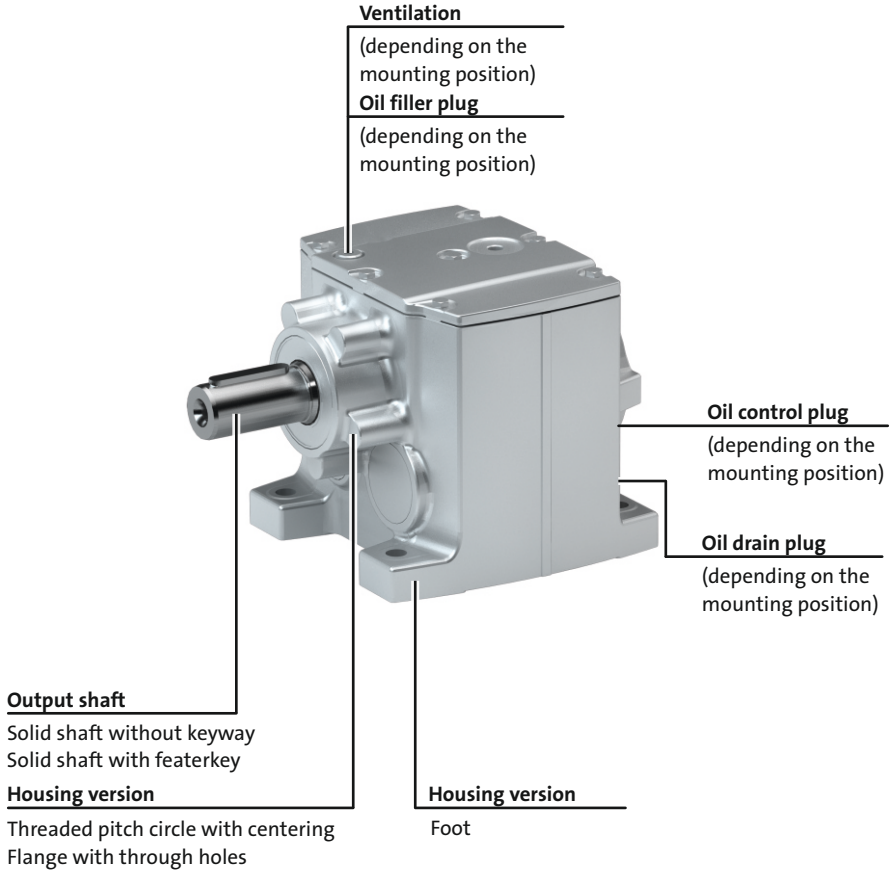

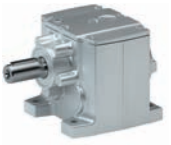

The gearbox kit

Gearbox details

Product	g500-H45	g500-H100	g500-H140	g500-H210	g500-H320	g500-H450
Driven shaft						
Solid shaft without keyway [mm]		20x40	25x50		30x60	35x70
Solid shaft with featherkey [mm]	14x28 20x40	20x40	25x50		30x60	30x60 35x70
Design	Standard stainless steel					
Gasket	Standard FPM (Viton)					
Bearing	Standard	Standard Reinforced				
Fitting grease	Not enclosed Enclosed					
Housing						
Housing version	With foot Without foot with centering	With foot With foot and centering Without foot with centering				
Output flange						
flange diameter [mm]	120/140/160			120/140/160/200	160/200	160/200/250
Lubricant						
Type	CLP 460 [1)] CLP HC 320 CLP HC 220 CLP HC 220 USDA H1					
Oil-level inspection	Without inspection With inspection					
Breather element	Without				Standard mounting position: Mounted Combined mounting position: loosely enclosed	
Backlash						
Backlash	Standard					

[1)] Not suitable for geared servo motors.

► Further information and installation feasibilities can be found in the Gearboxes chapter.

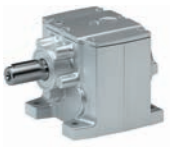

The gearbox kit

Gearbox details

Solid shaft		
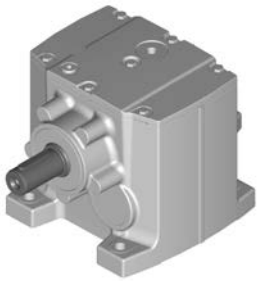 Foot mounting	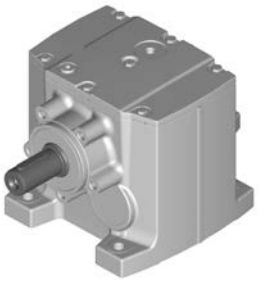 Foot mounting With centering	 Foot mounting Flange with through holes

Solid shaft	
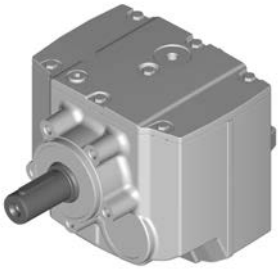 With centering	 Flange with through holes

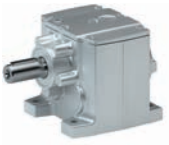

Functions and features

Product	g500-H45	g500-H100	g500-H140	g500-H210	g500-H320	g500-H450
Housing						
Design	Cuboid					
Material	Aluminium					
Solid shaft						
Design	with keyway to DIN 6885	with keyway to DIN 6885 Without keyway				
Tolerance	Shaft diameter ≤ 50 mm: k6 Shaft diameter > 50 mm: m6					
Material	Tempered steel C45 Nirosta X46Cr13					
Toothed parts						
Design	Ground tooth flanks Optimised tooth flank geometry					
Material	Case-hardened steel					
Shaft-hub joint						
	Force-fit					
Shaft sealing rings						
Design	With dust lip					
Material	NB / FP					
Bearing						
Design	Ball bearing / tapered-roller bearing depending on size and design					
Lubricants						
	Standard: mineral oil Optional: synthetic oil [1]					
Quantities	Corresponding to mounting position (see nameplate)					
Mechanical efficiency						
2-stage gearboxes [$\eta_{c=1}$]	0.96					
3-stage gearboxes [$\eta_{c=1}$]				0.95		

[1] Standard for geared servo motors.

Direction of rotation

2-stage gearboxes	3-stage gearboxes
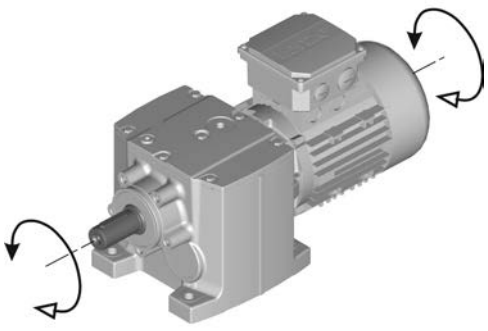	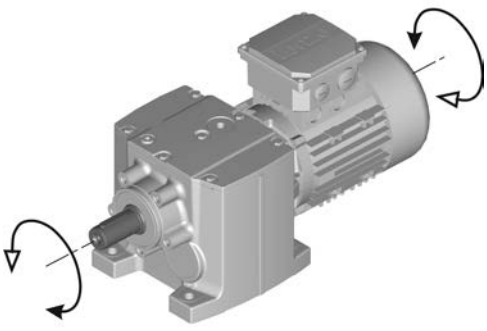



Lubricants

Lenze gearboxes and geared motors are ready for operation on delivery and are filled with lubricants specific to both the drive and the design. The mounting position and design specified in the order are key factors in choosing the volume of lubricant.

The lubricants listed in the lubricant table are approved for use in Lenze drives.

Lubricant table

Mode	CLP 460	CLP HC 320	CLP HC 220 USDA H1
Ambient temperature [°C]	0 ... +40	-25 ... +50	-20 ... +40
Specification	Mineral based oil with additives	Synthetic-based oil (synthetic hydrocarbon / poly-alpha-olefin oil)	
Changing interval	16000 operating hours not later than after three years (oil temperature 70 to 80 °C)	25000 operating hours not later than after three years (oil temperature 70 to 80 °C)	16000 operating hours not later than after three years (oil temperature 70 to 80 °C)
Fuchs	Fuchs Renolin CLP 460	Fuchs Renolin Unisyn CLP 320	bremer & leguil Cassida Fluid GL 220
Klüber	Klüberoil GEM1-460 N	Klübersynth GEM4-320 N	Klüberoil 4 UH1-220 N
Shell	Shell Omala S2 G 460	Shell Omala S4 GX HD 320	

► Please contact your Lenze sales office if you are operating at ambient temperatures in areas up to< -20 °C bzw. > or up to +40°C.

Shaft sealing rings

By default, the gearboxes come with NBR shaft sealing rings at the output end. At high speed and unfavourable ambient conditions as high temperature, reduced circulation of air etc., Lenze recommends the use of Viton shaft sealing rings.

Please consider this in your order.

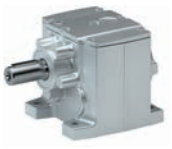

Ventilation

Non-ventilated gearboxes

No ventilation is required for gearboxes g500-H45 to H210.

Ventilated gearboxes

The g500-H320 H450 gearbox is supplied with a breather element as standard.

Gearboxes in combined mounting position

To reduce the number of different versions, the gearboxes can also be ordered with combined mounting positions.
Depending on the gearbox in question, the following combinations are available:
- g500-H45 in combined mounting position ABCDEF
- g500-H100 ... H450 in combined mounting position AEF

The breather elements are supplied loose.

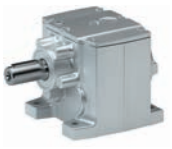

Ventilation

Position of ventilation, sealing elements and oil level check

► **A ... F** mounting position

A	B
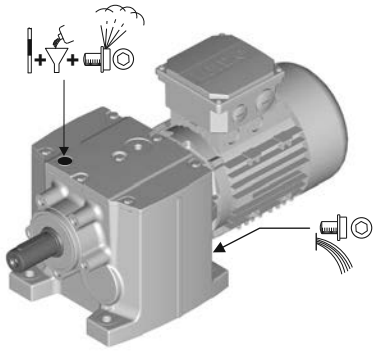	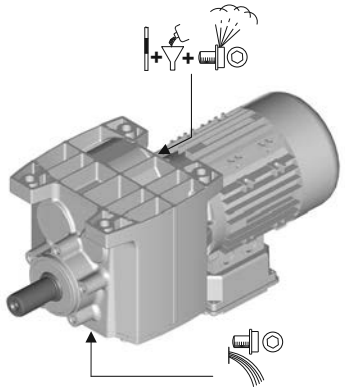
C	**D**
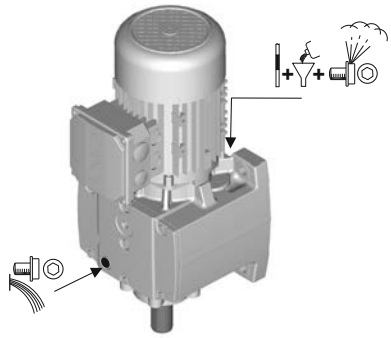	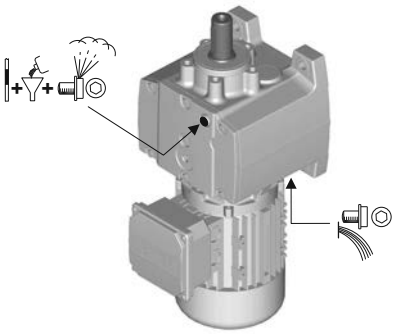
E	**F**
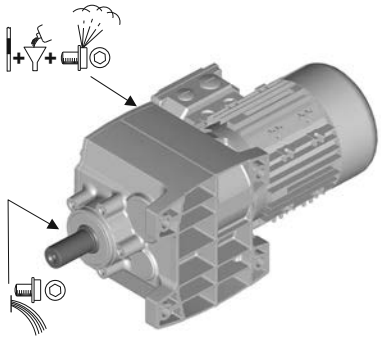	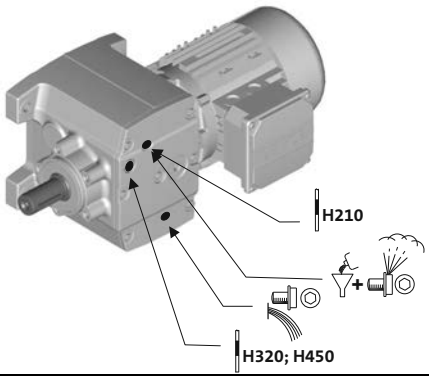

	Filling		Drain
	Ventilation		Check

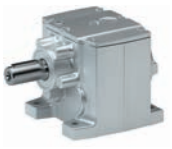

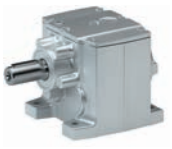

Permissible radial and axial forces at output

Permissible radial force

$F_{rad,perm} = f_w \times F_{rad,max}$

► If F_{rad} **and** $F_{ax} \neq 0$, please contact Lenze.

Permissible axial force

If there is no radial force, the maximum permissible axial force is 50 % of the table value $F_{rad,max}$

Application of forces

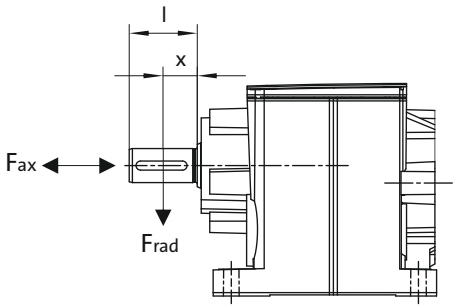

Additional load factor f_w at output shaft

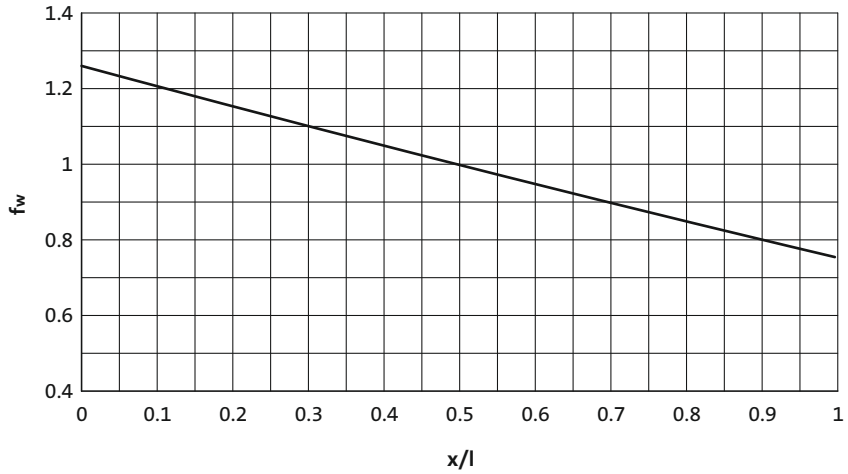

6.3

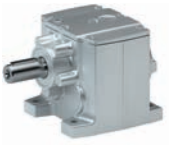

Permissible radial and axial forces at output

The values given in the table refer to the center shaft end force application point and are minimum values calculated according to the most unfavourable conditions (force application angle, mounting position, direction of rotation). The values were calculated for the motor/gearbox combination with a load capacity of c= 1.3 and an input speed of 1400 rpm.

► If the torque is transmitted via the flange face, max 50 % of the radial force $F_{rad,max}$ are permissible.

In case of different operating conditions, considerably higher forces can be transmitted. Please contact Lenze.

Product	n_2 [r/min]									
	1000	630	400	250	160	100	63	40	25	≤16

	Max. radial force, Solid shaft									
	$F_{rad,max}$	$F_{rad,max}$	$F_{rad,max}$	$F_{rad,max}$	$F_{rad,max}$	$F_{rad,max}$	$F_{rad,max}$	$F_{rad,max}$	$F_{rad,max}$	$F_{rad,max}$
	[N]	[N]	[N]	[N]	[N]	[N]	[N]	[N]	[N]	[N]
g500-H45	300	370	630	710	800	920	1100	1400	1500	1500
g500-H100	820	1000	1200	1450	1750	2120	2560	2650	2650	2650
g500-H140	1210	1750	2000	2300	2700	3300	3800	3800	3800	3800
g500-H210	1150	1600	2020	2390	2780	3360	3900	3900	4360	4800
g500-H320	1500	1900	2200	2600	3000	3500	4100	4800	5600	5700
g500-H450	1900	2200	2560	3000	3470	4050	4720	5480	6610	7100

	Max. radial force, Solid shaft (reinforced bearings))									
	$F_{rad,max}$	$F_{rad,max}$	$F_{rad,max}$	$F_{rad,max}$	$F_{rad,max}$	$F_{rad,max}$	$F_{rad,max}$	$F_{rad,max}$	$F_{rad,max}$	$F_{rad,max}$
	[N]	[N]	[N]	[N]	[N]	[N]	[N]	[N]	[N]	[N]
g500-H100	1020	1250	1500	1810	2190	2650	3200	3300	3300	3300
g500-H140	1510	2180	2500	2870	3370	4120	4750	4750	4750	4750
g500-H210	1430	2000	2520	2980	3470	4200	4870	4870	5450	6000
g500-H320	1870	2370	2750	3250	3750	4370	5120	6000	7000	7100
g500-H450	2370	2750	3200	3750	4330	5060	5900	6850	8260	8870

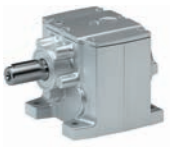

Moments of inertia

- The moments of inertia relate to the drive shaft of the gearbox.
- The total moment of inertia is calculated by adding the values of the gearbox, motor and accessories.

2-stage gearboxes

Product	Ratio	Moment of inertia
	i	J
		[kgcm²]
g500-H45	2.597	0.26
	3.413	0.17
	4.368	0.12
	5.312	0.18
	5.965	0.17
	6.982	0.12
	7.840	0.12
	8.935	0.089
	10.033	0.086
	11.429	0.059
	12.833	0.057
	14.836	0.041
	16.660	0.040
	19.013	0.028
	21.350	0.027
	24.595	0.019
	27.618	0.019
	32.000	0.012
	35.933	0.012
	41.455	0.008
	46.550	0.008
	52.909	0.005
	59.413	0.005
g500-H100	3.354	0.53
	4.600	0.34
	5.167	0.43
	5.887	0.24
	6.440	0.21
	7.086	0.28
	8.214	0.15
	9.068	0.20
	10.063	0.11
	11.360	0.17
	12.653	0.13
	14.490	0.13
	15.500	0.10
	17.750	0.10
	19.486	0.069
	22.314	0.067
	25.095	0.048
	28.738	0.047
	31.805	0.032
	36.422	0.031
	39.857	0.022
	45.643	0.022
	52.510	0.014
	60.133	0.013

Product	Ratio	Moment of inertia
	i	J
		[kgcm²]
g500-H140	3.267	0.90
	4.480	0.54
	5.733	0.36
	6.272	0.31
	7.269	0.51
	8.000	0.21
	9.029	0.34
	9.800	0.15
	11.554	0.24
	12.640	0.21
	13.957	0.20
	16.122	0.15
	17.802	0.14
	19.750	0.11
	21.808	0.11
	24.829	0.077
	27.415	0.074
	31.976	0.053
	35.308	0.051
	40.526	0.035
	44.748	0.034
	50.786	0.024
	56.077	0.024
	66.908	0.015
	73.879	0.014
g500-H210	3.389	1.53
	4.648	0.98
	5.583	1.24
	6.250	1.18
	7.657	0.82
	8.571	0.79
	9.799	0.59
	10.720	0.51
	12.000	0.50
	13.673	0.38
	15.306	0.36
	16.750	0.29
	18.750	0.28
	21.802	0.18
	24.405	0.18
	27.119	0.13
	30.357	0.13
	35.095	0.085
	39.286	0.083
	42.593	0.062
	47.679	0.061
	54.438	0.040
	60.938	0.039

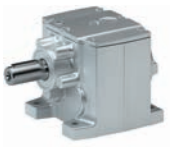

Moments of inertia

2-stage gearboxes

Product	Ratio	Moment of inertia
	i	J
		[kgcm²]
g500-H320	3.389	1.23
	4.648	0.81
	6.083	1.66
	6.910	1.51
	8.343	1.04
	9.477	0.97
	10.677	0.72
	11.680	0.63
	12.128	0.68
	13.268	0.59
	14.898	0.44
	16.923	0.42
	18.250	0.34
	20.731	0.32
	23.754	0.21
	26.983	0.20
	29.548	0.15
	33.564	0.15
	38.238	0.095
	43.436	0.092
	46.407	0.070
	52.715	0.067

Product	Ratio	Moment of inertia
	i	J
		[kgcm²]
g500-H450	3.444	4.94
	4.724	3.21
	5.678	3.64
	6.045	2.23
	6.613	1.98
	7.787	2.52
	8.800	2.40
	9.965	1.81
	11.262	1.74
	12.320	1.56
	13.905	1.21
	15.714	1.17
	17.033	0.95
	19.250	0.93
	22.170	0.53
	25.056	0.51
	27.578	0.39
	31.167	0.38
	35.689	0.24
	40.333	0.24
	43.313	0.18
	48.950	0.17
	54.750	0.12
	61.875	0.11

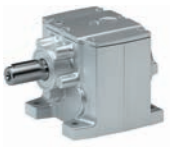

Moments of inertia

3-stage gearboxes

Product	Ratio	Moment of inertia
	i	J
		[kgcm²]
g500-H210	43.390	0.13
	48.571	0.13
	55.529	0.088
	62.160	0.088
	71.026	0.060
	79.507	0.059
	92.205	0.042
	103.214	0.042
	118.162	0.029
	132.270	0.029
	152.853	0.020
	198.873	0.014
	222.619	0.013
	257.631	0.003
	288.393	0.003
	368.080	0.006
g500-H320	47.276	0.13
	53.703	0.13
	60.502	0.093
	68.726	0.091
	77.387	0.062
	87.906	0.061
	100.462	0.044
	114.118	0.043
	128.743	0.030
	146.244	0.030
	166.541	0.021
	216.683	0.014
	246.137	0.014
	280.702	0.003
	318.859	0.003

Product	Ratio	Moment of inertia
	i	J
		[kgcm²]
g500-H450	44.124	0.36
	49.867	0.36
	56.469	0.25
	61.774	0.22
	69.813	0.22
	78.794	0.16
	89.048	0.15
	96.522	0.12
	109.083	0.12
	121.342	0.079
	137.133	0.078
	156.274	0.054
	176.611	0.054
	198.059	0.036
	223.833	0.035
	248.200	0.025
	280.500	0.025
	326.994	0.015
	369.548	0.015

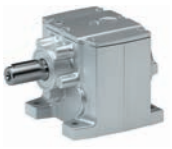

Additional weights for gearboxes

Product			g500-H45	g500-H100	g500-H140	g500-H210	g500-H320	g500-H450
Mass								
Foot	m	[kg]	0.1	0.1	0.2	0.1	0.1	0.2
Flange	m	[kg]	0.3	0.4	0.6	0.6	0.8	0.9

g500-S shaft-mounted helical geared motors

14 ... 650 Nm (synchronous servo motors)

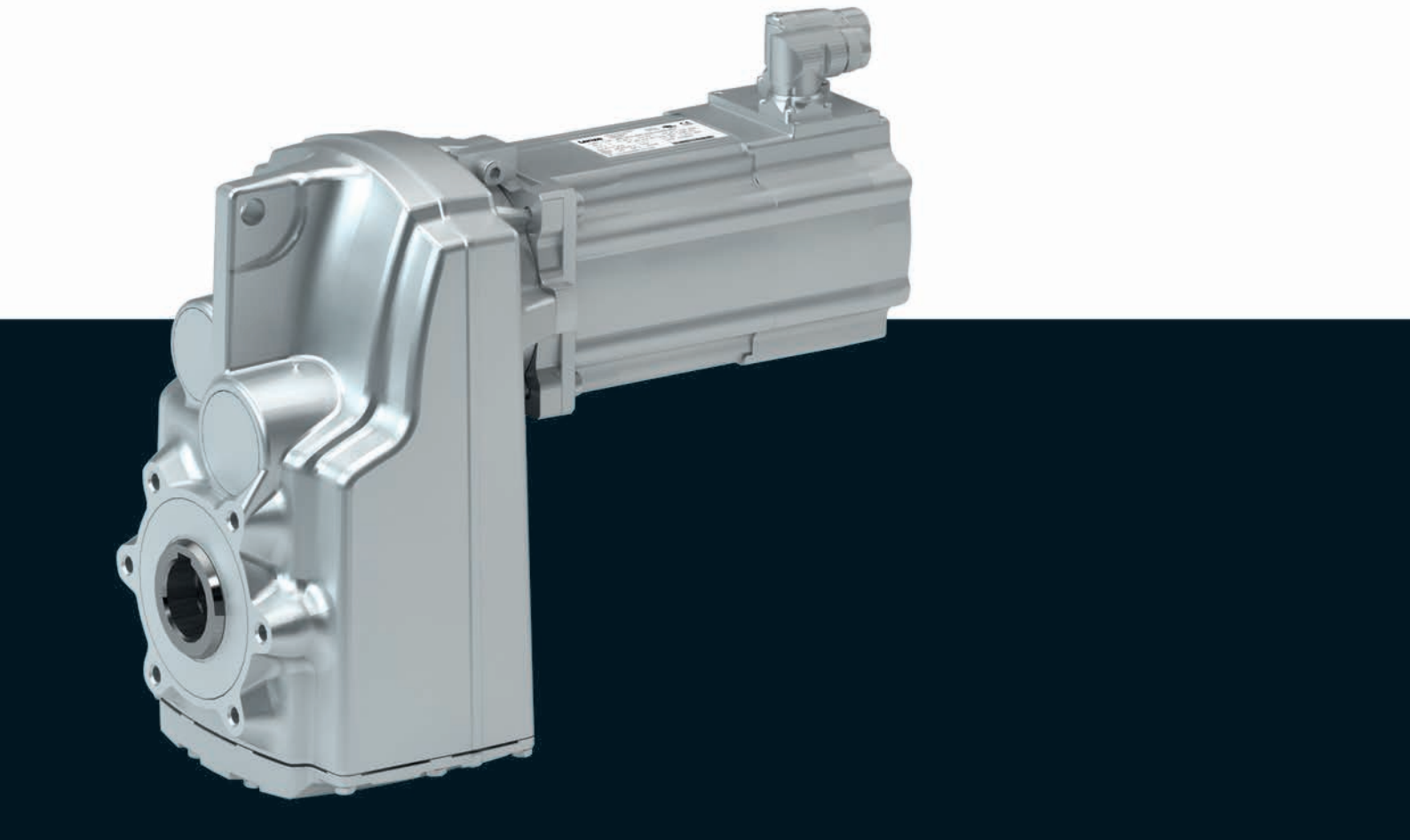

g500-S shaft-mounted helical geared motors

Contents



General information	List of abbreviations	6.5 - 5
	Product information	6.5 - 6
	Equipment	6.5 - 7
	The gearbox kit	6.5 - 8
	Dimensioning	6.5 - 14
Technical data	Selection tables, notes	6.5 - 19
	Selection tables	6.5 - 20
	Dimensions, notes	6.5 - 35
	Dimensions, self-ventilated motors	6.5 - 36
	Weights, self-ventilated motors	6.5 - 64
	Surface and corrosion protection	6.5 - 65

Contents





List of abbreviations

c		Load capacity
i		Ratio
J	[kgcm²]	Moment of inertia
m	[kg]	Mass
M_2	[Nm]	Output torque
$M_{2, max}$	[Nm]	Max. output torque
$n_{2, eto}$	[r/min]	Transition speed
$n_{2, th}$	[r/min]	Thermal limit speed

CCC	China Compulsory Certificate
CE	Communauté Européenne
CSA	Canadian Standards Association
cURus	Combined certification marks of UL for the USA and Canada
DIN	Deutsches Institut für Normung e.V.
EMC	Electromagnetic compatibility
EN	European standard
GOST	Certificate for Russian Federation
IEC	International Electrotechnical Commission
IM	International Mounting Code
IP	International Protection Code
NEMA	National Electrical Manufacturers Association
UL	Underwriters Laboratory Listed Product
UR	Underwriters Laboratory Recognized Product
VDE	Verband deutscher Elektrotechniker (Association of German Electrical Engineers)

g500-S shaft-mounted helical geared motors

General information



Product information

In combination with servo motors, our shaft-mounted helical gearboxes form a compact and powerful drive unit. Numerous options at the input and output end provide for the drive to be exactly adapted to your application.

The slim shaft-mounted helical gearboxes feature high reliable radial forces, closely stepped gear reductions and a low backlash. They are available in 2-pole and 3-pole design with a torque up to 660 Nm and a ratio of up to i= 495.

Versions

- Slimline design saves installation space of the machine
- Solid shaft, hollow shaft and shrink disc for direct integration into the machine
- High accuracy with axial output provide for the highest efficiency
- With MCS synchronous servo motors, rated torque: 0.5 Nm ... 72 Nm

The product name

Gearbox type	Product range		Design	Rated torque [Nm]	Product
Shaft-mounted helical gearbox	g500	-	S	130	g500-S130
				220	g500-S220
				400	g500-S400
				660	g500-S660



Equipment

Overview

The equipment includes all the options available as standard and all the built-on accessories of the product.

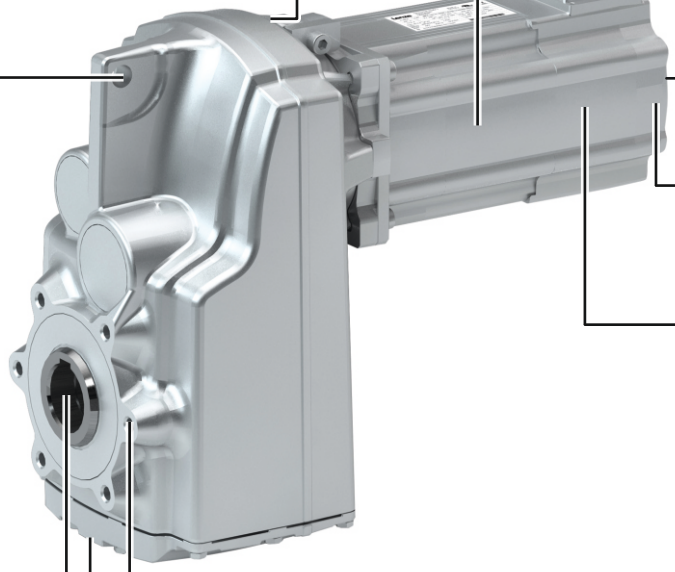

Ventilation
(depending on the mounting position)

Oil filler plug
(depending on the mounting position)

Oil control plug
(depending on the mounting position)

Torque plate
Rubber buffers

Output shaft
Hollow shaft without keyway
Solid shaft with featerkey
Hollow shaft with shrink disc

Oil drain plug
(depending on the mounting position)

Housing design
Threaded pitch circle with centering
Flange with through holes
Foot

Temperature monitoring
KTY
PTC

Motor connection
Connector
Terminal box

Cooling
self-ventilated
forced ventilated

Feedback
Resolver
Incremental encoder
Absolute value encoder

Permanent magnet brake



The gearbox kit

Geared motor

Product	g500-S130	g500-S220	g500-S400	g500-S660
Motor type	Synchronous servo motor			
Servo motor				
0.6 - 1.5 Nm	MCS06			
2.3 - 4.5 Nm	MCS09			
5.5 - 17 Nm		MCS12		
9.2 - 42 Nm			MCS14	
Technical data				
Output torque	See selection table			
Output speed	See selection table			
Ratio	See selection table			
Load capacity	See selection table			
Moment of inertia	See selection table			
Mounting position				
Standard	A/B/C/D/E/F			
Combined	AEF			
Colour	Not coated Primed Paint in various corrosion-protection designs in accordance with RAL colours			
Surface and corrosion protection	Without OKS(uncoated) OKS-G (primed) OKS-S (small) OKS-M (medium) OKS-L (large)			



The gearbox kit

Mounting positions

► Mounting position (A to F) and position of system blocks (1 to 6)

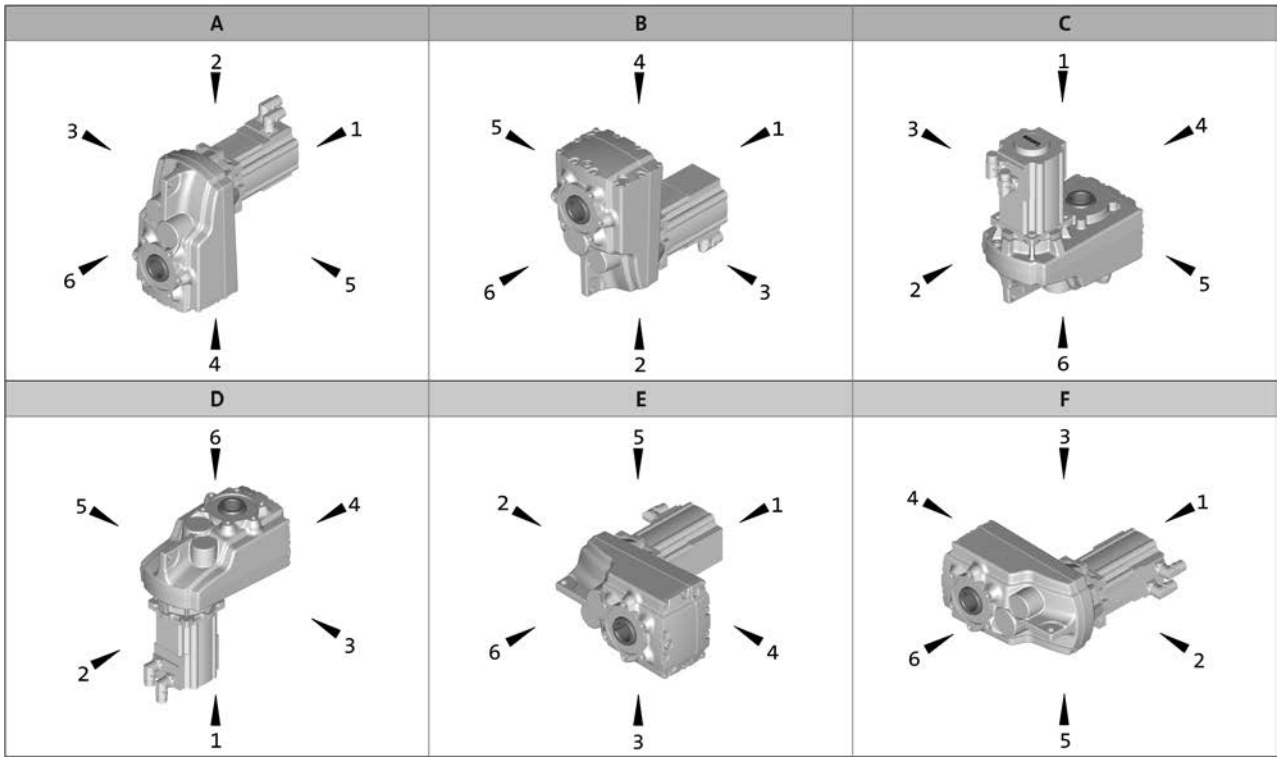

Hollow shaft: 0
Solid shaft: 6
Hollow shaft with shrink disc: 1, 6

Without foot: 0
Foot: 3, 4
Connector / terminal box: 2, 3, 4, 5



The gearbox kit

Motor details

Product	MCS			
	06C41 06F41 06I41	09D41 09L41 09F38 09H41	12D20 12D41 12H15 12H30 12H35 12L20 12L41	14D15 14D36 14H15 14H32 14L15 14L32 14P14 14P32
Connection type	Plug connectors	Plug connectors Terminal box		
Permanent magnet holding brake				
Rated torque [Nm]	2.2	8.0	12	22
Brake voltage [V]	DC 24			
Feedback	With absolute value encoder With incremental encoder With resolver			
Cooling	Self-ventilated			
Temperature monitoring	KTY83-110 thermal detector	KTY83-110 thermal detector PTC thermistor		
Approval	cURus GOST_R UkrSepro			
Degree of protection	IP54 IP65			

► Further information and installation feasibilities can be found in the Motors chapter.



The gearbox kit

Motor details

Connection type
 Plug connectors  Terminal box

Cooling: self-ventilated
 With resolver  With permanent magnet brake  With feedback With feedback and permanent magnet brake



The gearbox kit

Gearbox details

Product	g500-S130	g500-S220	g500-S400	g500-S660
Driven shaft				
Solid shaft with featherkey [mm]	25x50		30x60	35x70 40x80
Hollow shaft with keyway [mm]	25	25/30	30/35	40/45
Hollow shaft with shrink disc [mm]	25	25/30	35	40
Design	Standard stainless steel			
Gasket	Standard FPM (Viton)			
Bearing	Standard			
Fitting grease	Not enclosed Enclosed			
Housing				
Housing version	With foot without centring With centering			
Output flange				
flange diameter [mm]	160		200	200/250 [1]
Lubricant				
Type	CLP 460 [2] CLP HC 320 CLP HC 220 CLP HC 220 USDA H1			
Oil-level inspection	Without inspection With inspection			
Breather element	Without		Standard mounting position: Mounted Combined mounting position: loosely enclosed	
Backlash				
Backlash	Standard			
Accessories				
Torque plate	Rubber buffers			
Shaft cover	Shrink disc: Rotating cover Shrink disc: Fixed cover			

[1] 200 mm flange diameter only possible on hollow shaft version.
[2] Not suitable for geared servo motors.

6.5

► Further information and installation feasibilities can be found in the Gearboxes chapter.



The gearbox kit

Gearbox details

Solid shaft

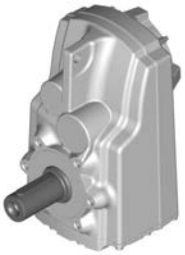
without centring

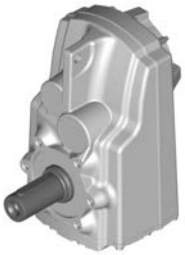
With centering


Flange with through holes

Hollow shaft


without centring


With centering


Flange with through holes

Hollow shaft with shrink disc


without centring


With centering


Flange with through holes

Accessories


Foot mounting


With rubber buffer

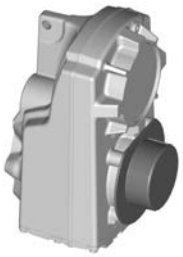
Shrink disc cover

6.5



Dimensioning

General information about the data provided in this catalogue

The powers, torques and speeds specified in this catalogue are rounded values and are valid under the following conditions:

- Operating time/day = 8 h (100% OT)
- Duty class I for up to 10 switching operations/h
- Mounting positions and designs in this catalogue
- Standard lubricant
- T_{amb} = 20 °C for gearboxes,
  T_{amb} = 40 °C for motors (in accordance with EN 60034)
- Site altitude < = 1000 m amsl
- The selection tables provide the permissible mechanical powers and torques. For notes on the thermal power limit, see chapter drive dimensioning.
- The rated power specified for motors and geared motors applies to operating mode S1 (in accordance with EN 60034).

Under different operating conditions, the values obtained may vary from those listed here.
In the case of extreme operating conditions, please consult your Lenze sales office.



Dimensioning

Thermal power limit

The thermal power limit, defined by the heat balance, limits the permissible gearbox continuous power. It may be less than the mechanical power ratings listed in the selection tables.

The thermal power limit is affected by:
- the churning losses in the lubricant. These are determined by the mounting position and the circumferential speed of the gears;
- the load and the speed
- the ambient conditions: temperature, air circulation, input or dissipation via shafts and the foundation

If the following input speeds n_1 are exceeded, please contact Lenze:

Motor frame size	Mounting position A, B, E, F	Mounting position C, D
MCS06 ... 12	4000 r/min	3000 r/min
MCS14	3000 r/min	1500 r/min

► For a short period of time up to 5 min, 30 % higher speeds are permissible

Possible ways of extending the application area

- shaft sealing rings made from FP material/Viton (option)
- reduction in lubricant quantity
- cooling of the geared motor by means of air convection on the machine/system



Dimensioning

Load capacity and application factor

Load capacity c of gearbox
Rated value for the load capacity of Lenze geared motors.
- c is the ratio of the permissible rated torque of the gearbox to the rated torque supplied by the drive component (e.g. the built-in Lenze motor).
- The value of c must always be greater than the value of the application factor k calculated for the application.

Application factor k (according to DIN 3990)
Takes into account the influence of temporally variable loads which are actually present during the anticipated operating time of gearboxes and geared motors.
k is determined by:
- the type of load
- the load intensity
- temporal influences

Duty class	Load type
I	Smooth operation, small or light jolts
II	Uneven operation, average jolts
III	Uneven operation, severe jolts and/or alternating load

Application factor k

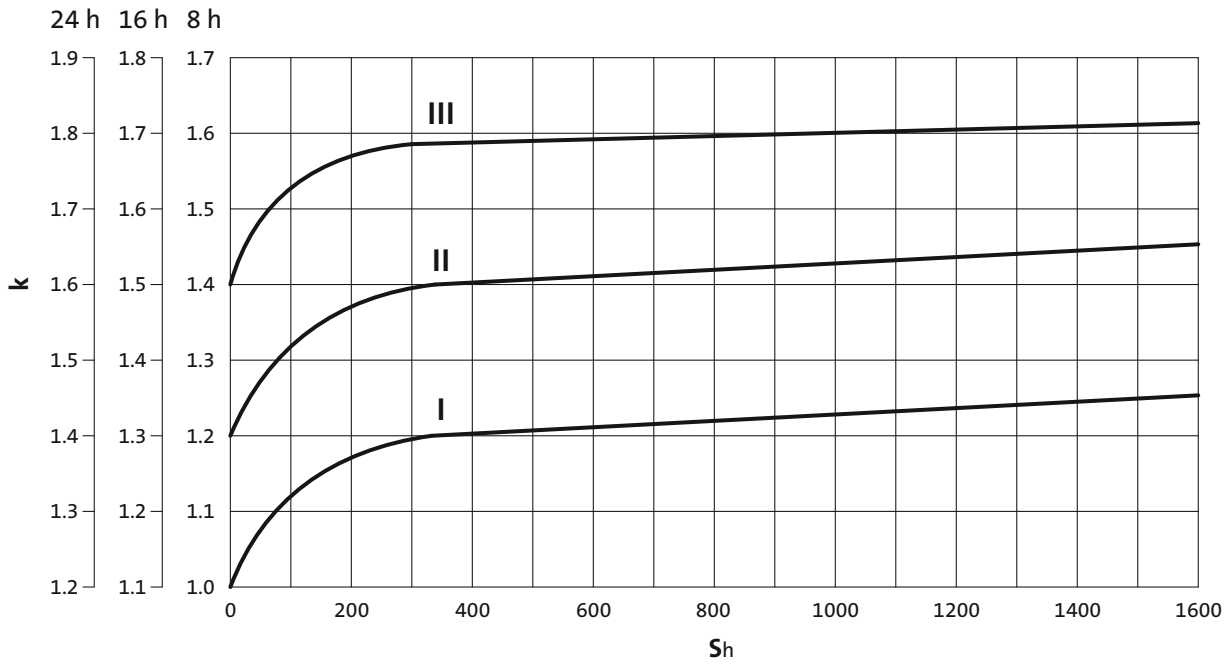

► S_h= switchings/h



Dimensioning

Weights

The values given in the tables consider the following gearbox/motor combination:
- Gearbox with solid shaft including lubricant amount
- Motor with feedback

For versions deviating from this, additional weights have to be considered.

The respective values can be found for:
- Geared motors with feedback
  > Chapter: Geared motors/Technical data
- Motor options: Brake
  > Chapter: Motors/Accessories

Moments of inertia

The given moments of inertia of the gearbox refer to the drive shaft. The influence of the ratio (i^2) has been considered in the data.

When the total moment of inertia of the geared motor is calculated, the values of the geared motors and the brake have to be added.

The respective values can be found for:
- Geared motors with feedback
  > Chapter: Geared motors/Technical data/Selection tables
- Motor options: Brake
  > Chapter: Motors/Accessories





Selection tables, notes

Notes on the selection tables

The selection tables show the available combinations of gearbox type, number of stages, ratio and motor. They are used only to provide basic orientation.
The following legend indicates the structure of the selection tables.

Number of the gear stage of the gearbox

2-stage gearboxes

Inverter operation						i	Product		Cooling	
$M_{2,max}$ [Nm]	$n_{2,th}$ [r/min]	M_2 [Nm]	$n_{2,eto}$ [r/min]	c	J [kgcm²]		g500	MCS		
95	747	15	747	3.7	2.400	5.021	-S130	09F38	Selbst	31
109	630	14	630	4.4	1.700	6.425	-S130	09D41	Selbst	31
109	630	24	630	2.6	2.500	6.425	-S130	09H41	Selbst	31
109	630	28	630	2.2	3.400	6.425	-S130	09L41	Selbst	31

For operating mode S1
Torque M_2 and
thermal output speed $n_{2,th}$

For operating mode S2,S3 und S6
Max. permissible acceleration torque of geared motor $M_{2,max}$ and
output speed $n_{2,eto}$

Load capacity of the gearbox
c is the ratio between the permissible rated torque of the gearbox and the rated torque of the three-phase AC motor (converted to the driven shaft).
c must be always higher than the service factor **k** determined for the application **k**.

$$c = \frac{M_{2,zul}}{M_{1N} \cdot i \cdot \eta_{Getr}} > k$$

Moment of inertia of geared motor

Ratio i

Product Gearbox

Product Motor

Type of motor cooling

Page number for dimensions



Selection tables

2-stage gearboxes

Inverter operation						i	Product		Cooling	
$M_{2, max}$ [Nm]	$n_{2, th}$ [r/min]	M_2 [Nm]	$n_{2, eto}$ [r/min]	c	J [kgcm²]		g500	MCS		
59	630	14	630	4.4	1.700	6.425	-S130	09D41	natural	36
62	277	17	277	5.5	0.500	14.606	-S130	06F41	natural	36
65	576	16	576	4.2	1.600	7.029	-S130	09D41	natural	36
68	254	19	254	5.0	0.500	15.979	-S130	06F41	natural	36
69	355	17	355	5.6	0.700	11.413	-S130	06I41	natural	36
73	747	15	747	3.7	2.400	5.021	-S130	09F38	natural	36
77	224	21	224	5.0	0.600	18.069	-S130	06F41	natural	36
83	114	21	114	5.7	0.300	35.493	-S130	06C41	natural	36
85	640	18	640	6.0	3.400	5.860	-S400	09F38	natural	48
87	630	24	630	2.6	2.500	6.425	-S130	09H41	natural	36
87	630	28	630	2.2	3.400	6.425	-S130	09L41	natural	36
87	584	19	584	3.3	2.100	6.425	-S130	09F38	natural	36
87	199	24	199	4.5	0.400	20.381	-S130	06F41	natural	36
88	277	21	277	4.4	0.600	14.606	-S130	06I41	natural	36
92	576	26	576	2.5	2.400	7.029	-S130	09H41	natural	36
92	576	31	576	2.1	3.300	7.029	-S130	09L41	natural	36
92	534	21	534	3.2	2.000	7.029	-S130	09F38	natural	36
92	370	28	370	5.9	5.500	5.267	-S220	12D20	natural	40
94	100	24	100	5.0	0.200	40.422	-S130	06C41	natural	36
96	254	23	254	4.0	0.600	15.979	-S130	06I41	natural	36
98	176	27	176	4.0	0.500	23.048	-S130	06F41	natural	36
102	333	31	333	5.4	5.900	5.860	-S400	12D20	natural	48
106	89	27	89	4.4	0.200	45.711	-S130	06C41	natural	36
107	162	29	162	3.6	0.400	24.967	-S130	06F41	natural	36
108	391	37	391	4.6	9.900	3.840	-S220	12H15	natural	40
109	224	26	224	4.0	0.600	18.069	-S130	06I41	natural	36
110	383	38	383	5.8	16.000	3.920	-S660	12H15	natural	56
112	304	34	304	5.2	5.600	6.411	-S400	12D20	natural	48
121	143	33	143	3.2	0.400	28.233	-S130	06F41	natural	36
123	199	30	199	3.6	0.500	20.381	-S130	06I41	natural	36
129	655	36	655	3.9	10.000	4.579	-S400	12H30	natural	48
129	328	41	328	6.0	11.000	4.579	-S400	14D15	natural	48
129	328	44	328	3.9	10.000	4.579	-S400	12H15	natural	48
130	277	33	277	2.9	1.400	14.606	-S130	09D41	natural	36
130	257	44	257	2.2	1.800	14.606	-S130	09F38	natural	36
130	254	36	254	2.6	1.400	15.979	-S130	09D41	natural	36
130	235	48	235	2.0	1.800	15.979	-S130	09F38	natural	36
130	224	40	224	2.6	1.400	18.069	-S130	09D41	natural	36
130	208	54	208	2.0	1.800	18.069	-S130	09F38	natural	36
130	199	45	199	2.3	1.300	20.381	-S130	09D41	natural	36



Selection tables

2-stage gearboxes

Inverter operation						i	Product		Cooling	
$M_{2, max}$ [Nm]	$n_{2, th}$ [r/min]	M_2 [Nm]	$n_{2, eto}$ [r/min]	c	J [kgcm²]		g500	MCS		
130	184	61	184	1.8	1.700	20.381	-S130	09F38	natural	36
130	176	34	176	3.2	0.500	23.048	-S130	06I41	natural	36
130	176	51	176	2.1	1.300	23.048	-S130	09D41	natural	36
130	163	69	163	1.6	1.700	23.048	-S130	09F38	natural	36
130	162	36	162	2.9	0.400	24.967	-S130	06I41	natural	36
130	162	56	162	1.9	1.200	24.967	-S130	09D41	natural	36
130	162	92	162	1.1	2.000	24.967	-S130	09H41	natural	36
130	150	75	150	1.4	1.600	24.967	-S130	09F38	natural	36
130	143	41	143	2.6	0.500	28.233	-S130	06I41	natural	36
130	143	63	143	1.7	1.300	28.233	-S130	09D41	natural	36
130	143	104	143	1.0	2.100	28.233	-S130	09H41	natural	36
130	133	85	133	1.3	1.700	28.233	-S130	09F38	natural	36
130	129	37	129	3.2	0.300	31.387	-S130	06F41	natural	36
130	129	46	129	2.6	0.400	31.387	-S130	06I41	natural	36
130	114	41	114	2.9	0.300	35.493	-S130	06F41	natural	36
130	114	52	114	2.3	0.400	35.493	-S130	06I41	natural	36
130	100	47	100	2.5	0.300	40.422	-S130	06F41	natural	36
130	100	59	100	2.0	0.400	40.422	-S130	06I41	natural	36
130	89	53	89	2.2	0.300	45.711	-S130	06F41	natural	36
130	89	67	89	1.8	0.400	45.711	-S130	06I41	natural	36
134	254	41	254	4.9	5.500	7.667	-S220	12D20	natural	40
148	570	41	570	3.5	8.800	5.267	-S220	12H30	natural	40
148	285	51	285	3.5	8.800	5.267	-S220	12H15	natural	40
150	584	44	584	3.1	16.000	3.339	-S400	12L20	natural	48
153	244	37	244	4.3	1.500	16.571	-S220	09D41	natural	40
162	210	50	210	4.1	5.000	9.280	-S220	12D20	natural	40
165	602	43	602	3.3	9.200	5.860	-S400	12H35	natural	48
165	512	45	512	3.2	9.200	5.860	-S400	12H30	natural	48
165	256	52	256	4.9	10.000	5.860	-S400	14D15	natural	48
165	256	57	256	3.3	9.200	5.860	-S400	12H15	natural	48
172	426	60	426	2.6	14.000	4.579	-S400	12L20	natural	48
173	508	50	508	3.1	13.000	3.840	-S220	12L20	natural	40
173	216	42	216	4.3	1.500	18.776	-S220	09D41	natural	40
178	449	52	449	3.9	19.000	3.339	-S400	14H15	natural	48
180	550	47	550	3.1	8.900	6.411	-S400	12H35	natural	48
180	468	50	468	3.1	8.900	6.411	-S400	12H30	natural	48
180	234	57	234	4.6	9.700	6.411	-S400	14D15	natural	48
180	234	62	234	3.1	8.900	6.411	-S400	12H15	natural	48
180	135	44	135	4.1	0.500	29.937	-S220	06I41	natural	40
181	370	69	370	2.4	12.000	5.267	-S220	12L20	natural	40



Selection tables

2-stage gearboxes

Inverter operation						i	Product		Cooling	
$M_{2, max}$ [Nm]	$n_{2, th}$ [r/min]	M_2 [Nm]	$n_{2, eto}$ [r/min]	c	J [kgcm²]		g500	MCS		
182	95	50	95	4.0	0.300	42.533	-S220	06F41	natural	40
184	186	56	186	3.6	5.000	10.514	-S220	12D20	natural	40
185	333	77	333	2.2	12.000	5.860	-S400	12L20	natural	48
187	200	45	200	4.0	1.400	20.300	-S220	09D41	natural	40
189	289	39	289	4.2	2.100	12.992	-S220	09F38	natural	40
190	222	66	222	3.4	8.900	6.767	-S220	12H15	natural	40
193	304	84	304	2.1	12.000	6.411	-S400	12L20	natural	48
194	436	53	436	4.0	11.000	6.880	-S660	12H30	natural	56
194	218	67	218	4.0	11.000	6.880	-S660	12H15	natural	56
198	123	48	123	4.2	0.500	32.867	-S220	06I41	natural	40
203	449	75	449	2.7	29.000	3.339	-S400	14L15	natural	48
203	404	97	404	2.1	40.000	3.339	-S400	14P14	natural	48
206	84	56	84	3.5	0.300	48.190	-S220	06F41	natural	40
207	164	63	164	3.2	4.700	11.876	-S220	12D20	natural	40
209	383	61	383	5.6	23.000	3.920	-S660	14H15	natural	56
210	201	67	201	5.5	10.000	7.467	-S400	14D15	natural	48
212	176	51	176	3.5	1.400	23.000	-S220	09D41	natural	40
213	497	51	497	3.9	19.000	3.920	-S660	12L20	natural	56
214	255	44	255	3.7	2.100	14.720	-S220	09F38	natural	40
215	253	45	253	6.0	2.300	14.806	-S400	09F38	natural	48
216	196	74	196	2.9	8.800	7.667	-S220	12H15	natural	40
217	254	100	254	2.0	12.000	7.667	-S220	12L20	natural	40
220	323	72	323	2.4	8.300	9.280	-S220	12H30	natural	40
220	288	89	288	2.3	12.000	6.767	-S220	12L20	natural	40
220	253	92	253	1.9	8.000	11.876	-S220	12H30	natural	40
220	244	61	244	2.6	2.300	16.571	-S220	09H41	natural	40
220	244	69	244	2.3	4.400	16.571	-S220	12D41	natural	40
220	244	72	244	2.2	3.200	16.571	-S220	09L41	natural	40
220	231	101	231	1.7	7.900	12.992	-S220	12H30	natural	40
220	226	50	226	3.3	1.900	16.571	-S220	09F38	natural	40
220	216	69	216	2.6	2.300	18.776	-S220	09H41	natural	40
220	216	78	216	2.3	4.400	18.776	-S220	12D41	natural	40
220	216	82	216	2.2	3.200	18.776	-S220	09L41	natural	40
220	210	122	210	1.7	12.000	9.280	-S220	12L20	natural	40
220	200	56	200	3.3	1.900	18.776	-S220	09F38	natural	40
220	200	75	200	2.4	2.200	20.300	-S220	09H41	natural	40
220	200	85	200	2.1	4.300	20.300	-S220	12D41	natural	40
220	200	89	200	2.0	3.100	20.300	-S220	09L41	natural	40
220	186	138	186	1.5	12.000	10.514	-S220	12L20	natural	40
220	185	61	185	3.0	1.800	20.300	-S220	09F38	natural	40



Selection tables

2-stage gearboxes

Inverter operation						i	Product		Cooling	
$M_{2, max}$ [Nm]	$n_{2, th}$ [r/min]	M_2 [Nm]	$n_{2, eto}$ [r/min]	c	J [kgcm²]		g500	MCS		
220	181	129	181	1.4	7.700	16.571	-S220	12H30	natural	40
220	176	85	176	2.1	2.200	23.000	-S220	09H41	natural	40
220	176	96	176	1.9	4.300	23.000	-S220	12D41	natural	40
220	176	100	176	1.8	3.100	23.000	-S220	09L41	natural	40
220	174	148	174	1.3	7.600	20.300	-S220	12H35	natural	40
220	164	156	164	1.3	11.000	11.876	-S220	12L20	natural	40
220	163	69	163	2.7	1.800	23.000	-S220	09F38	natural	40
220	162	90	162	2.4	8.300	9.280	-S220	12H15	natural	40
220	160	146	160	1.4	7.700	18.776	-S220	12H30	natural	40
220	153	59	153	3.0	1.300	26.422	-S220	09D41	natural	40
220	153	97	153	1.8	2.100	26.422	-S220	09H41	natural	40
220	153	115	153	1.6	3.000	26.422	-S220	09L41	natural	40
220	150	69	150	2.9	4.600	12.992	-S220	12D20	natural	40
220	150	170	150	1.2	11.000	12.992	-S220	12L20	natural	40
220	148	158	148	1.3	7.600	20.300	-S220	12H30	natural	40
220	145	72	145	2.8	4.700	13.456	-S220	12D20	natural	40
220	145	176	145	1.1	11.000	13.456	-S220	12L20	natural	40
220	143	102	143	2.2	8.300	10.514	-S220	12H15	natural	40
220	142	79	142	2.3	1.700	26.422	-S220	09F38	natural	40
220	135	67	135	2.7	1.300	29.937	-S220	09D41	natural	40
220	135	110	135	1.6	2.100	29.937	-S220	09H41	natural	40
220	135	131	135	1.4	3.000	29.937	-S220	09L41	natural	40
220	133	79	133	2.6	4.600	14.720	-S220	12D20	natural	40
220	133	193	133	1.1	11.000	14.720	-S220	12L20	natural	40
220	130	179	130	1.1	7.600	23.000	-S220	12H30	natural	40
220	126	115	126	1.9	8.000	11.876	-S220	12H15	natural	40
220	125	90	125	2.0	1.700	29.937	-S220	09F38	natural	40
220	123	73	123	2.7	1.300	32.867	-S220	09D41	natural	40
220	123	121	123	1.6	2.100	32.867	-S220	09H41	natural	40
220	123	143	123	1.4	3.000	32.867	-S220	09L41	natural	40
220	118	88	118	2.3	4.400	16.571	-S220	12D20	natural	40
220	116	126	116	1.8	7.900	12.992	-S220	12H15	natural	40
220	114	99	114	2.1	1.700	32.867	-S220	09F38	natural	40
220	112	131	112	1.7	8.000	13.456	-S220	12H15	natural	40
220	109	54	109	3.7	0.400	37.238	-S220	06I41	natural	40
220	109	83	109	2.4	1.200	37.238	-S220	09D41	natural	40
220	109	137	109	1.4	2.000	37.238	-S220	09H41	natural	40
220	109	163	109	1.2	2.900	37.238	-S220	09L41	natural	40
220	104	100	104	2.2	4.400	18.776	-S220	12D20	natural	40
220	102	143	102	1.5	7.900	14.720	-S220	12H15	natural	40



Selection tables

2-stage gearboxes

Inverter operation						i	Product		Cooling	
$M_{2, max}$ [Nm]	$n_{2, th}$ [r/min]	M_2 [Nm]	$n_{2, eto}$ [r/min]	c	J [kgcm²]		g500	MCS		
220	101	112	101	1.8	1.600	37.238	-S220	09F38	natural	40
220	96	108	96	2.0	4.300	20.300	-S220	12D20	natural	40
220	95	62	95	3.2	0.400	42.533	-S220	06I41	natural	40
220	91	161	91	1.4	7.700	16.571	-S220	12H15	natural	40
220	85	123	85	1.8	4.300	23.000	-S220	12D20	natural	40
220	84	70	84	2.8	0.400	48.190	-S220	06I41	natural	40
220	80	182	80	1.2	7.700	18.776	-S220	12H15	natural	40
220	79	60	79	3.3	0.300	51.620	-S220	06F41	natural	40
220	79	75	79	2.6	0.400	51.620	-S220	06I41	natural	40
220	74	197	74	1.1	7.600	20.300	-S220	12H15	natural	40
220	69	68	69	2.9	0.300	58.486	-S220	06F41	natural	40
220	69	85	69	2.3	0.400	58.486	-S220	06I41	natural	40
237	178	75	178	5.0	10.000	8.436	-S400	14D15	natural	48
243	328	71	328	3.4	17.000	4.579	-S400	14H15	natural	48
243	328	102	328	2.4	26.000	4.579	-S400	14L15	natural	48
243	295	133	295	1.8	38.000	4.579	-S400	14P14	natural	48
243	71	66	71	3.6	0.300	56.960	-S400	06F41	natural	48
250	363	70	363	3.3	16.000	5.376	-S660	12L20	natural	56
258	550	80	550	2.5	16.000	5.860	-S400	14H32	natural	48
258	550	98	550	2.0	25.000	5.860	-S400	14L32	natural	48
258	256	91	256	2.8	16.000	5.860	-S400	14H15	natural	48
258	256	131	256	2.0	25.000	5.860	-S400	14L15	natural	48
258	230	171	230	1.5	37.000	5.860	-S400	14P14	natural	48
259	132	79	132	4.6	4.800	14.806	-S400	12D20	natural	48
261	503	87	503	2.3	16.000	6.411	-S400	14H32	natural	48
261	503	107	503	1.9	25.000	6.411	-S400	14L32	natural	48
261	234	100	234	2.6	16.000	6.411	-S400	14H15	natural	48
261	234	143	234	1.8	25.000	6.411	-S400	14L15	natural	48
261	211	187	211	1.4	36.000	6.411	-S400	14P14	natural	48
268	71	83	71	2.9	0.400	56.960	-S400	06I41	natural	48
269	283	90	283	2.7	14.000	6.880	-S660	12L20	natural	56
275	63	75	63	3.6	0.300	64.354	-S400	06F41	natural	48
282	86	68	86	3.8	0.400	46.933	-S400	06I41	natural	48
283	120	86	120	4.2	4.700	16.197	-S400	12D20	natural	48
288	293	79	293	3.9	8.600	10.240	-S400	12H30	natural	48
288	147	91	147	4.4	9.400	10.240	-S400	14D15	natural	48
288	147	99	147	3.9	8.600	10.240	-S400	12H15	natural	48
293	383	87	383	3.9	32.000	3.920	-S660	14L15	natural	56
294	83	71	83	3.9	0.500	48.950	-S660	06I41	natural	56
302	63	94	63	2.9	0.400	64.354	-S400	06I41	natural	48



Selection tables

2-stage gearboxes

Inverter operation						i	Product		Cooling	
$M_{2, max}$ [Nm]	$n_{2, th}$ [r/min]	M_2 [Nm]	$n_{2, eto}$ [r/min]	c	J [kgcm²]		g500	MCS		
317	266	87	266	4.0	9.700	11.262	-S660	12H30	natural	56
317	133	109	133	4.0	9.700	11.262	-S660	12H15	natural	56
319	222	76	222	4.3	4.500	18.286	-S400	12D41	natural	48
319	107	98	107	4.1	4.500	18.286	-S400	12D20	natural	48
319	76	77	76	3.8	0.400	53.026	-S400	06I41	natural	48
326	259	90	259	3.5	8.500	11.569	-S400	12H30	natural	48
326	130	103	130	3.9	9.300	11.569	-S400	14D15	natural	48
326	130	112	130	3.6	8.500	11.569	-S400	12H15	natural	48
334	112	81	112	4.5	1.300	36.267	-S400	09D41	natural	48
335	73	81	73	3.9	0.500	55.773	-S660	06I41	natural	56
336	261	98	261	3.1	13.000	7.467	-S400	12L20	natural	48
338	344	114	344	3.0	44.000	3.920	-S660	14P14	natural	56
347	244	96	244	3.8	9.400	12.320	-S660	12H30	natural	56
347	122	120	122	3.9	9.400	12.320	-S660	12H15	natural	56
349	304	84	304	3.9	16.000	6.417	-S660	12L20	natural	56
355	222	67	222	4.3	2.400	18.286	-S400	09H41	natural	48
359	222	80	222	3.7	3.300	18.286	-S400	09L41	natural	48
361	234	100	234	4.0	9.500	12.832	-S660	12H30	natural	56
361	196	86	196	3.8	4.500	20.659	-S400	12D41	natural	48
361	117	124	117	4.0	9.500	12.832	-S660	12H15	natural	56
361	94	110	94	3.6	4.500	20.659	-S400	12D20	natural	48
365	201	116	201	3.1	16.000	7.467	-S400	14H15	natural	48
365	201	167	201	2.2	26.000	7.467	-S400	14L15	natural	48
365	181	217	181	1.7	37.000	7.467	-S400	14P14	natural	48
367	218	107	218	3.9	18.000	6.880	-S660	14H15	natural	56
368	148	76	148	4.4	1.900	25.308	-S400	09F38	natural	48
369	269	95	269	3.2	8.200	13.105	-S400	12H35	natural	48
369	229	102	229	3.1	8.200	13.105	-S400	12H30	natural	48
369	115	117	115	3.4	9.000	13.105	-S400	14D15	natural	48
369	115	127	115	3.1	8.200	13.105	-S400	12H15	natural	48
377	181	83	181	3.7	2.300	22.400	-S400	09H41	natural	48
377	181	98	181	3.1	3.200	22.400	-S400	09L41	natural	48
378	99	91	99	4.0	1.300	40.974	-S400	09D41	natural	48
380	231	110	231	3.1	13.000	8.436	-S400	12L20	natural	48
380	178	131	178	2.9	16.000	8.436	-S400	14H15	natural	48
380	178	188	178	2.0	25.000	8.436	-S400	14L15	natural	48
380	160	246	160	1.6	37.000	8.436	-S400	14P14	natural	48
385	190	134	190	2.6	12.000	10.240	-S400	12L20	natural	48
388	279	120	279	3.2	29.000	5.376	-S660	14L15	natural	56
388	251	156	251	2.5	40.000	5.376	-S660	14P14	natural	56



Selection tables

2-stage gearboxes

Inverter operation						i	Product		Cooling	
$M_{2, max}$ [Nm]	$n_{2, th}$ [r/min]	M_2 [Nm]	$n_{2, eto}$ [r/min]	c	J [kgcm²]		g500	MCS		
391	181	93	181	3.5	4.400	22.400	-S400	12D41	natural	48
391	87	120	87	3.4	4.400	22.400	-S400	12D20	natural	48
393	139	107	139	3.0	2.100	29.156	-S400	09H41	natural	48
393	139	127	139	2.5	3.000	29.156	-S400	09L41	natural	48
393	129	88	129	3.8	1.700	29.156	-S400	09F38	natural	48
395	214	109	214	3.8	9.300	14.037	-S660	12H30	natural	56
395	107	136	107	3.9	9.300	14.037	-S660	12H15	natural	56
397	267	96	267	3.9	15.000	7.311	-S660	12L20	natural	56
400	246	104	246	2.9	8.100	14.336	-S400	12H35	natural	48
400	218	118	218	2.5	8.000	16.197	-S400	12H35	natural	48
400	209	111	209	2.9	8.100	14.336	-S400	12H30	natural	48
400	203	115	203	2.8	8.100	14.806	-S400	12H30	natural	48
400	196	76	196	4.3	2.400	20.659	-S400	09H41	natural	48
400	196	90	196	3.6	3.300	20.659	-S400	09L41	natural	48
400	193	133	193	2.6	7.800	18.286	-S400	12H35	natural	48
400	185	126	185	2.5	8.000	16.197	-S400	12H30	natural	48
400	176	248	176	1.4	15.000	18.286	-S400	14H32	natural	48
400	171	150	171	2.3	7.800	20.659	-S400	12H35	natural	48
400	169	152	169	2.4	12.000	11.569	-S400	12L20	natural	48
400	164	142	164	2.5	7.800	18.286	-S400	12H30	natural	48
400	160	93	160	3.5	2.300	25.308	-S400	09H41	natural	48
400	160	106	160	3.1	4.400	25.308	-S400	12D41	natural	48
400	160	110	160	3.0	3.200	25.308	-S400	09L41	natural	48
400	157	163	157	2.1	7.700	22.400	-S400	12H35	natural	48
400	156	281	156	1.3	15.000	20.659	-S400	14H32	natural	48
400	149	172	149	2.1	11.000	13.105	-S400	12L20	natural	48
400	147	159	147	2.5	16.000	10.240	-S400	14H15	natural	48
400	147	229	147	1.8	25.000	10.240	-S400	14L15	natural	48
400	145	160	145	2.3	7.800	20.659	-S400	12H30	natural	48
400	139	184	139	1.9	7.700	25.308	-S400	12H35	natural	48
400	136	188	136	1.9	11.000	14.336	-S400	12L20	natural	48
400	134	174	134	2.1	7.700	22.400	-S400	12H30	natural	48
400	132	194	132	1.9	11.000	14.806	-S400	12L20	natural	48
400	132	298	132	1.3	36.000	10.240	-S400	14P14	natural	48
400	130	180	130	2.2	15.000	11.569	-S400	14H15	natural	48
400	130	258	130	1.6	25.000	11.569	-S400	14L15	natural	48
400	123	121	123	3.0	2.100	32.940	-S400	09H41	natural	48
400	123	144	123	2.5	3.000	32.940	-S400	09L41	natural	48
400	120	212	120	1.7	11.000	16.197	-S400	12L20	natural	48
400	119	196	119	1.8	7.700	25.308	-S400	12H30	natural	48



Selection tables

2-stage gearboxes

Inverter operation						i	Product		Cooling	
$M_{2, max}$ [Nm]	$n_{2, th}$ [r/min]	M_2 [Nm]	$n_{2, eto}$ [r/min]	c	J [kgcm²]		g500	MCS		
400	117	337	117	1.2	36.000	11.569	-S400	14P14	natural	48
400	115	203	115	2.0	15.000	13.105	-S400	14H15	natural	48
400	115	292	115	1.4	24.000	13.105	-S400	14L15	natural	48
400	114	99	114	3.8	1.700	32.940	-S400	09F38	natural	48
400	112	134	112	2.7	2.100	36.267	-S400	09H41	natural	48
400	112	158	112	2.3	3.000	36.267	-S400	09L41	natural	48
400	107	240	107	1.7	11.000	18.286	-S400	12L20	natural	48
400	105	128	105	3.1	8.900	14.336	-S400	14D15	natural	48
400	105	139	105	2.9	8.100	14.336	-S400	12H15	natural	48
400	105	223	105	1.8	15.000	14.336	-S400	14H15	natural	48
400	105	320	105	1.3	24.000	14.336	-S400	14L15	natural	48
400	103	109	103	3.4	1.700	36.267	-S400	09F38	natural	48
400	103	381	103	1.1	36.000	13.105	-S400	14P14	natural	48
400	101	132	101	3.0	8.900	14.806	-S400	14D15	natural	48
400	101	144	101	2.8	8.100	14.806	-S400	12H15	natural	48
400	101	230	101	1.7	15.000	14.806	-S400	14H15	natural	48
400	101	330	101	1.2	24.000	14.806	-S400	14L15	natural	48
400	99	151	99	2.4	2.100	40.974	-S400	09H41	natural	48
400	99	179	99	2.0	3.000	40.974	-S400	09L41	natural	48
400	94	271	94	1.5	11.000	20.659	-S400	12L20	natural	48
400	93	145	93	2.8	8.800	16.197	-S400	14D15	natural	48
400	93	157	93	2.5	8.000	16.197	-S400	12H15	natural	48
400	93	251	93	1.6	15.000	16.197	-S400	14H15	natural	48
400	93	361	93	1.1	24.000	16.197	-S400	14L15	natural	48
400	92	123	92	3.0	1.700	40.974	-S400	09F38	natural	48
400	87	293	87	1.4	11.000	22.400	-S400	12L20	natural	48
400	82	163	82	2.5	8.600	18.286	-S400	14D15	natural	48
400	82	177	82	2.3	7.800	18.286	-S400	12H15	natural	48
400	82	284	82	1.4	15.000	18.286	-S400	14H15	natural	48
400	77	135	77	3.0	4.400	25.308	-S400	12D20	natural	48
400	77	331	77	1.2	11.000	25.308	-S400	12L20	natural	48
400	73	184	73	2.2	8.600	20.659	-S400	14D15	natural	48
400	73	200	73	2.0	7.800	20.659	-S400	12H15	natural	48
400	73	321	73	1.3	15.000	20.659	-S400	14H15	natural	48
400	67	217	67	1.8	7.700	22.400	-S400	12H15	natural	48
400	59	246	59	1.6	7.700	25.308	-S400	12H15	natural	48
403	210	84	210	3.9	4.000	19.250	-S660	09L41	natural	56
410	222	115	222	3.3	14.000	8.800	-S660	12L20	natural	56
417	218	154	218	2.7	27.000	6.880	-S660	14L15	natural	56
417	196	200	196	2.1	38.000	6.880	-S660	14P14	natural	56



Selection tables

2-stage gearboxes

Inverter operation						i	Product		Cooling	
$M_{2, max}$ [Nm]	$n_{2, th}$ [r/min]	M_2 [Nm]	$n_{2, eto}$ [r/min]	c	J [kgcm²]		g500	MCS		
420	162	92	162	3.7	2.500	25.056	-S660	09H41	natural	56
420	162	109	162	3.1	3.400	25.056	-S660	09L41	natural	56
424	88	103	88	4.5	1.400	45.956	-S660	09D41	natural	56
436	130	115	130	3.4	2.400	31.167	-S660	09H41	natural	56
436	130	136	130	2.9	3.300	31.167	-S660	09L41	natural	56
436	120	94	120	4.3	2.000	31.167	-S660	09F38	natural	56
438	162	105	162	4.2	4.600	25.056	-S660	12D41	natural	56
438	78	134	78	4.1	4.600	25.056	-S660	12D20	natural	56
441	173	148	173	2.7	13.000	11.262	-S660	12L20	natural	56
442	224	114	224	3.3	8.800	15.714	-S660	12H35	natural	56
442	191	122	191	3.2	8.800	15.714	-S660	12H30	natural	56
442	96	152	96	3.3	8.800	15.714	-S660	12H15	natural	56
446	83	109	83	3.7	1.300	48.950	-S660	09D41	natural	56
446	83	180	83	2.2	2.100	48.950	-S660	09H41	natural	56
446	83	214	83	1.9	3.000	48.950	-S660	09L41	natural	56
446	77	147	77	2.8	1.700	48.950	-S660	09F38	natural	56
452	100	149	100	2.8	2.200	40.333	-S660	09H41	natural	56
452	100	176	100	2.3	3.100	40.333	-S660	09L41	natural	56
452	93	121	93	3.5	1.800	40.333	-S660	09F38	natural	56
459	185	96	185	3.9	3.900	21.933	-S660	09L41	natural	56
461	158	161	158	2.6	13.000	12.320	-S660	12L20	natural	56
467	195	131	195	3.3	14.000	10.027	-S660	12L20	natural	56
470	171	137	171	4.7	18.000	8.800	-S660	14H15	natural	56
479	234	143	234	3.9	29.000	6.417	-S660	14L15	natural	56
479	142	105	142	3.7	2.500	28.548	-S660	09H41	natural	56
479	142	125	142	3.1	3.400	28.548	-S660	09L41	natural	56
495	124	206	124	2.2	12.000	15.714	-S660	12L20	natural	56
497	114	131	114	3.4	2.300	35.511	-S660	09H41	natural	56
497	114	155	114	2.9	3.200	35.511	-S660	09L41	natural	56
497	106	107	106	4.3	1.900	35.511	-S660	09F38	natural	56
499	142	119	142	4.2	4.600	28.548	-S660	12D41	natural	56
499	68	152	68	4.1	4.600	28.548	-S660	12D20	natural	56
502	152	168	152	2.7	13.000	12.832	-S660	12L20	natural	56
504	197	130	197	3.3	8.700	17.905	-S660	12H35	natural	56
504	168	139	168	3.2	8.700	17.905	-S660	12H30	natural	56
504	84	160	84	4.1	9.500	17.905	-S660	14D15	natural	56
504	84	174	84	3.3	8.700	17.905	-S660	12H15	natural	56
508	73	124	73	3.7	1.300	55.773	-S660	09D41	natural	56
508	73	206	73	2.2	2.100	55.773	-S660	09H41	natural	56
508	73	244	73	1.9	3.000	55.773	-S660	09L41	natural	56



Selection tables

2-stage gearboxes

Inverter operation						i	Product		Cooling	
$M_{2, max}$ [Nm]	$n_{2, th}$ [r/min]	M_2 [Nm]	$n_{2, eto}$ [r/min]	c	J [kgcm²]		g500	MCS		
508	67	168	67	2.8	1.700	55.773	-S660	09F38	natural	56
515	88	169	88	2.8	2.200	45.956	-S660	09H41	natural	56
515	88	201	88	2.3	3.100	45.956	-S660	09L41	natural	56
515	82	138	82	3.5	1.800	45.956	-S660	09F38	natural	56
521	183	140	183	3.2	8.500	19.250	-S660	12H35	natural	56
521	156	149	156	3.1	8.500	19.250	-S660	12H30	natural	56
521	101	252	101	2.1	12.000	19.250	-S660	12L20	natural	56
521	78	187	78	2.8	8.500	19.250	-S660	12H15	natural	56
525	139	184	139	2.6	13.000	14.037	-S660	12L20	natural	56
535	150	156	150	4.0	17.000	10.027	-S660	14H15	natural	56
542	162	267	162	1.6	11.000	25.056	-S660	12L41	natural	56
542	141	182	141	2.5	7.900	25.056	-S660	12H35	natural	56
542	120	194	120	2.5	7.900	25.056	-S660	12H30	natural	56
542	78	172	78	3.8	9.300	19.250	-S660	14D15	natural	56
542	78	328	78	1.6	11.000	25.056	-S660	12L20	natural	56
542	60	243	60	2.2	7.900	25.056	-S660	12H15	natural	56
544	130	130	130	3.9	4.500	31.167	-S660	12D41	natural	56
544	63	166	63	3.4	4.500	31.167	-S660	12D20	natural	56
546	205	163	205	3.6	28.000	7.311	-S660	14L15	natural	56
554	210	187	210	3.0	40.000	6.417	-S660	14P14	natural	56
563	130	333	130	1.5	11.000	31.167	-S660	12L41	natural	56
563	113	227	113	2.4	7.800	31.167	-S660	12H35	natural	56
563	96	242	96	2.3	7.800	31.167	-S660	12H30	natural	56
563	63	408	63	1.4	11.000	31.167	-S660	12L20	natural	56
563	48	302	48	1.9	7.800	31.167	-S660	12H15	natural	56
564	109	235	109	2.2	12.000	17.905	-S660	12L20	natural	56
578	129	340	129	1.5	15.000	25.056	-S660	14H32	natural	56
578	129	418	129	1.2	24.000	25.056	-S660	14L32	natural	56
578	129	511	129	1.0	35.000	25.056	-S660	14P32	natural	56
578	60	224	60	2.6	8.700	25.056	-S660	14D15	natural	56
578	60	389	60	1.5	15.000	25.056	-S660	14H15	natural	56
578	60	559	60	1.0	24.000	25.056	-S660	14L15	natural	56
593	185	213	185	2.8	40.000	7.311	-S660	14P14	natural	56
593	161	160	161	3.2	8.400	21.933	-S660	12H35	natural	56
593	137	170	137	3.1	8.400	21.933	-S660	12H30	natural	56
593	89	287	89	2.1	12.000	21.933	-S660	12L20	natural	56
593	68	213	68	2.8	8.400	21.933	-S660	12H15	natural	56
601	133	175	133	3.8	17.000	11.262	-S660	14H15	natural	56
617	68	196	68	3.4	9.200	21.933	-S660	14D15	natural	56
618	142	305	142	1.6	11.000	28.548	-S660	12L41	natural	56



Selection tables

2-stage gearboxes

Inverter operation						i	Product		Cooling	
$M_{2, max}$ [Nm]	$n_{2, th}$ [r/min]	M_2 [Nm]	$n_{2, eto}$ [r/min]	c	J [kgcm²]		g500	MCS		
618	124	208	124	2.5	7.900	28.548	-S660	12H35	natural	56
618	105	222	105	2.5	7.900	28.548	-S660	12H30	natural	56
618	68	374	68	1.6	11.000	28.548	-S660	12L20	natural	56
618	53	277	53	2.2	7.900	28.548	-S660	12H15	natural	56
620	114	148	114	3.9	4.400	35.511	-S660	12D41	natural	56
620	55	189	55	3.4	4.400	35.511	-S660	12D20	natural	56
625	150	224	150	2.8	27.000	10.027	-S660	14L15	natural	56
625	135	292	135	2.1	38.000	10.027	-S660	14P14	natural	56
635	171	196	171	3.2	27.000	8.800	-S660	14L15	natural	56
635	153	256	153	2.5	38.000	8.800	-S660	14P14	natural	56
642	114	379	114	1.5	11.000	35.511	-S660	12L41	natural	56
642	99	258	99	2.4	7.700	35.511	-S660	12H35	natural	56
642	85	276	85	2.3	7.700	35.511	-S660	12H30	natural	56
642	55	465	55	1.4	11.000	35.511	-S660	12L20	natural	56
642	42	345	42	1.9	7.700	35.511	-S660	12H15	natural	56
657	122	191	122	3.5	16.000	12.320	-S660	14H15	natural	56
660	205	213	205	2.4	16.000	15.714	-S660	14H32	natural	56
660	205	262	205	1.9	25.000	15.714	-S660	14L32	natural	56
660	180	243	180	2.1	16.000	17.905	-S660	14H32	natural	56
660	168	261	168	2.2	15.000	19.250	-S660	14H32	natural	56
660	168	321	168	1.8	25.000	19.250	-S660	14L32	natural	56
660	168	392	168	1.5	36.000	19.250	-S660	14P32	natural	56
660	147	298	147	1.9	15.000	21.933	-S660	14H32	natural	56
660	147	366	147	1.6	24.000	21.933	-S660	14L32	natural	56
660	133	251	133	2.6	26.000	11.262	-S660	14L15	natural	56
660	122	275	122	2.4	26.000	12.320	-S660	14L15	natural	56
660	120	328	120	2.0	37.000	11.262	-S660	14P14	natural	56
660	117	199	117	3.3	16.000	12.832	-S660	14H15	natural	56
660	117	286	117	2.3	26.000	12.832	-S660	14L15	natural	56
660	113	388	113	1.5	15.000	28.548	-S660	14H32	natural	56
660	113	476	113	1.2	24.000	28.548	-S660	14L32	natural	56
660	113	582	113	1.0	35.000	28.548	-S660	14P32	natural	56
660	110	359	110	1.8	37.000	12.320	-S660	14P14	natural	56
660	107	218	107	3.0	16.000	14.037	-S660	14H15	natural	56
660	107	313	107	2.1	25.000	14.037	-S660	14L15	natural	56
660	105	373	105	1.8	37.000	12.832	-S660	14P14	natural	56
660	96	244	96	2.7	16.000	15.714	-S660	14H15	natural	56
660	96	351	96	1.9	25.000	15.714	-S660	14L15	natural	56
660	96	409	96	1.6	37.000	14.037	-S660	14P14	natural	56
660	86	457	86	1.4	36.000	15.714	-S660	14P14	natural	56



Selection tables

2-stage gearboxes

Inverter operation						i	Product		Cooling	
$M_{2, max}$ [Nm]	$n_{2, th}$ [r/min]	M_2 [Nm]	$n_{2, eto}$ [r/min]	c	J [kgcm²]		g500	MCS		
660	84	278	84	2.4	16.000	17.905	-S660	14H15	natural	56
660	84	400	84	1.6	25.000	17.905	-S660	14L15	natural	56
660	78	299	78	2.2	15.000	19.250	-S660	14H15	natural	56
660	78	430	78	1.5	25.000	19.250	-S660	14L15	natural	56
660	75	521	75	1.3	36.000	17.905	-S660	14P14	natural	56
660	70	560	70	1.2	36.000	19.250	-S660	14P14	natural	56
660	68	340	68	1.9	15.000	21.933	-S660	14H15	natural	56
660	68	489	68	1.4	24.000	21.933	-S660	14L15	natural	56
660	62	638	62	1.0	36.000	21.933	-S660	14P14	natural	56
660	53	255	53	2.6	8.700	28.548	-S660	14D15	natural	56
660	53	443	53	1.5	15.000	28.548	-S660	14H15	natural	56
660	53	637	53	1.0	24.000	28.548	-S660	14L15	natural	56



Selection tables

3-stage gearboxes

Inverter operation						i	Product		Cooling	
$M_{2, max}$ [Nm]	$n_{2, th}$ [r/min]	M_2 [Nm]	$n_{2, eto}$ [r/min]	c	J [kgcm²]		g500	MCS		
121	77	30	77	6.0	0.300	52.587	-S220	06C41	natural	40
137	68	34	68	5.3	0.300	59.581	-S220	06C41	natural	40
154	60	39	60	4.7	0.200	67.298	-S220	06C41	natural	40
175	53	44	53	4.5	0.200	76.249	-S220	06C41	natural	40
197	47	49	47	4.0	0.200	86.079	-S220	06C41	natural	40
220	77	60	77	3.0	0.400	52.587	-S220	06F41	natural	40
220	77	75	77	2.4	0.400	52.587	-S220	06I41	natural	40
220	77	116	77	1.6	1.200	52.587	-S220	09D41	natural	40
220	71	156	71	1.2	1.600	52.587	-S220	09F38	natural	40
220	68	68	68	2.6	0.400	59.581	-S220	06F41	natural	40
220	68	85	68	2.1	0.400	59.581	-S220	06I41	natural	40
220	68	131	68	1.4	1.200	59.581	-S220	09D41	natural	40
220	63	177	63	1.0	1.600	59.581	-S220	09F38	natural	40
220	60	77	60	2.3	0.300	67.298	-S220	06F41	natural	40
220	60	96	60	1.9	0.400	67.298	-S220	06I41	natural	40
220	60	148	60	1.2	1.200	67.298	-S220	09D41	natural	40
220	53	87	53	2.3	0.300	76.249	-S220	06F41	natural	40
220	53	109	53	1.8	0.400	76.249	-S220	06I41	natural	40
220	53	168	53	1.2	1.200	76.249	-S220	09D41	natural	40
220	47	99	47	2.0	0.300	86.079	-S220	06F41	natural	40
220	47	123	47	1.6	0.400	86.079	-S220	06I41	natural	40
220	42	56	42	3.6	0.200	97.528	-S220	06C41	natural	40
220	42	112	42	1.8	0.300	97.528	-S220	06F41	natural	40
220	42	140	42	1.4	0.400	97.528	-S220	06I41	natural	40
220	36	64	36	3.1	0.200	111.747	-S220	06C41	natural	40
220	36	128	36	1.6	0.300	111.747	-S220	06F41	natural	40
220	36	160	36	1.2	0.300	111.747	-S220	06I41	natural	40
220	32	73	32	2.7	0.200	126.610	-S220	06C41	natural	40
220	32	145	32	1.4	0.300	126.610	-S220	06F41	natural	40
220	32	181	32	1.1	0.300	126.610	-S220	06I41	natural	40
276	62	75	62	4.3	0.400	65.559	-S400	06F41	natural	48
312	55	85	55	4.3	0.300	74.260	-S400	06F41	natural	48
320	29	80	29	4.5	0.200	139.313	-S400	06C41	natural	48
344	70	83	70	3.9	0.400	58.027	-S400	06I41	natural	48
353	48	96	48	3.8	0.300	83.900	-S400	06F41	natural	48
388	62	94	62	3.5	0.400	65.559	-S400	06I41	natural	48
399	43	109	43	3.3	0.300	94.984	-S400	06F41	natural	48
399	38	123	38	2.9	0.300	107.314	-S400	06F41	natural	48
399	38	154	38	2.4	0.400	107.314	-S400	06I41	natural	48
399	29	160	29	2.3	0.300	139.313	-S400	06F41	natural	48



Selection tables

3-stage gearboxes

Inverter operation						i	Product		Cooling	
$M_{2, max}$ [Nm]	$n_{2, th}$ [r/min]	M_2 [Nm]	$n_{2, eto}$ [r/min]	c	J [kgcm²]		g500	MCS		
399	29	200	29	1.8	0.300	139.313	-S400	06I41	natural	48
400	70	128	70	2.6	1.200	58.027	-S400	09D41	natural	48
400	70	211	70	1.6	2.000	58.027	-S400	09H41	natural	48
400	70	250	70	1.3	2.900	58.027	-S400	09L41	natural	48
400	65	172	65	1.9	1.600	58.027	-S400	09F38	natural	48
400	62	144	62	2.3	1.200	65.559	-S400	09D41	natural	48
400	62	238	62	1.4	2.000	65.559	-S400	09H41	natural	48
400	62	282	62	1.2	2.900	65.559	-S400	09L41	natural	48
400	57	194	57	1.7	1.600	65.559	-S400	09F38	natural	48
400	55	106	55	3.4	0.400	74.260	-S400	06I41	natural	48
400	55	163	55	2.2	1.200	74.260	-S400	09D41	natural	48
400	55	270	55	1.3	2.000	74.260	-S400	09H41	natural	48
400	55	319	55	1.1	2.900	74.260	-S400	09L41	natural	48
400	51	220	51	1.7	1.600	74.260	-S400	09F38	natural	48
400	48	120	48	3.0	0.400	83.900	-S400	06I41	natural	48
400	48	184	48	2.0	1.200	83.900	-S400	09D41	natural	48
400	48	305	48	1.2	2.000	83.900	-S400	09H41	natural	48
400	48	361	48	1.0	2.900	83.900	-S400	09L41	natural	48
400	45	249	45	1.5	1.600	83.900	-S400	09F38	natural	48
400	43	136	43	2.7	0.400	94.984	-S400	06I41	natural	48
400	33	141	33	2.6	0.300	123.307	-S400	06F41	natural	48
400	33	177	33	2.0	0.300	123.307	-S400	06I41	natural	48
405	23	101	23	5.9	0.200	176.611	-S660	06C41	natural	56
462	20	115	20	5.2	0.200	201.230	-S660	06C41	natural	56
516	71	125	71	4.3	1.500	56.818	-S660	09D41	natural	56
523	33	143	33	4.2	0.300	124.289	-S660	06F41	natural	56
577	30	157	30	3.8	0.300	137.133	-S660	06F41	natural	56
579	64	140	64	3.8	1.400	63.817	-S660	09D41	natural	56
601	40	145	40	4.1	0.500	101.460	-S660	06I41	natural	56
625	81	181	81	2.8	2.300	49.867	-S660	09H41	natural	56
625	81	214	81	2.4	3.200	49.867	-S660	09L41	natural	56
625	75	148	75	3.5	1.900	49.867	-S660	09F38	natural	56
634	58	153	58	3.5	1.300	69.813	-S660	09D41	natural	56
646	37	156	37	3.8	0.400	109.083	-S660	06I41	natural	56
650	71	206	71	2.6	2.300	56.818	-S660	09H41	natural	56
650	71	244	71	2.2	3.200	56.818	-S660	09L41	natural	56
650	66	168	66	3.2	1.900	56.818	-S660	09F38	natural	56
657	26	179	26	3.3	0.300	156.249	-S660	06F41	natural	56
660	64	232	64	2.3	2.200	63.817	-S660	09H41	natural	56
660	64	274	64	2.0	3.100	63.817	-S660	09L41	natural	56



Selection tables

3-stage gearboxes

Inverter operation						i	Product		Cooling	
$M_{2, max}$ [Nm]	$n_{2, th}$ [r/min]	M_2 [Nm]	$n_{2, eto}$ [r/min]	c	J [kgcm²]		g500	MCS		
660	59	189	59	2.9	1.800	63.817	-S660	09F38	natural	56
660	58	254	58	2.1	2.100	69.813	-S660	09H41	natural	56
660	58	300	58	1.8	3.000	69.813	-S660	09L41	natural	56
660	56	160	56	3.7	1.400	72.713	-S660	09D41	natural	56
660	56	264	56	2.3	2.200	72.713	-S660	09H41	natural	56
660	56	313	56	1.9	3.100	72.713	-S660	09L41	natural	56
660	54	207	54	2.7	1.700	69.813	-S660	09F38	natural	56
660	52	215	52	2.8	1.800	72.713	-S660	09F38	natural	56
660	51	175	51	3.4	1.300	79.545	-S660	09D41	natural	56
660	51	289	51	2.1	2.100	79.545	-S660	09H41	natural	56
660	51	342	51	1.8	3.000	79.545	-S660	09L41	natural	56
660	47	236	47	2.6	1.700	79.545	-S660	09F38	natural	56
660	46	196	46	3.0	1.300	89.048	-S660	09D41	natural	56
660	46	323	46	1.9	2.100	89.048	-S660	09H41	natural	56
660	46	383	46	1.6	3.000	89.048	-S660	09L41	natural	56
660	42	264	42	2.3	1.700	89.048	-S660	09F38	natural	56
660	40	223	40	2.7	1.300	101.460	-S660	09D41	natural	56
660	40	368	40	1.6	2.100	101.460	-S660	09H41	natural	56
660	40	436	40	1.4	3.000	101.460	-S660	09L41	natural	56
660	37	240	37	2.5	1.200	109.083	-S660	09D41	natural	56
660	37	301	37	2.0	1.700	101.460	-S660	09F38	natural	56
660	37	396	37	1.5	2.000	109.083	-S660	09H41	natural	56
660	37	469	37	1.3	2.900	109.083	-S660	09L41	natural	56
660	34	323	34	1.9	1.600	109.083	-S660	09F38	natural	56
660	33	178	33	3.4	0.400	124.289	-S660	06I41	natural	56
660	33	273	33	2.2	1.200	124.289	-S660	09D41	natural	56
660	33	451	33	1.3	2.000	124.289	-S660	09H41	natural	56
660	33	535	33	1.1	2.900	124.289	-S660	09L41	natural	56
660	30	197	30	3.0	0.400	137.133	-S660	06I41	natural	56
660	30	368	30	1.7	1.600	124.289	-S660	09F38	natural	56
660	26	224	26	2.7	0.400	156.249	-S660	06I41	natural	56
660	23	203	23	3.0	0.300	176.611	-S660	06F41	natural	56
660	23	253	23	2.4	0.400	176.611	-S660	06I41	natural	56
660	20	231	20	2.6	0.300	201.230	-S660	06F41	natural	56
660	20	288	20	2.1	0.400	201.230	-S660	06I41	natural	56



Dimensions, notes

Notes on the dimensions

The following legend shows the layout of the dimension sheets.

Product gearbox

g500-S130

Driven shaft design

Abmessungen mit Hohlwelle

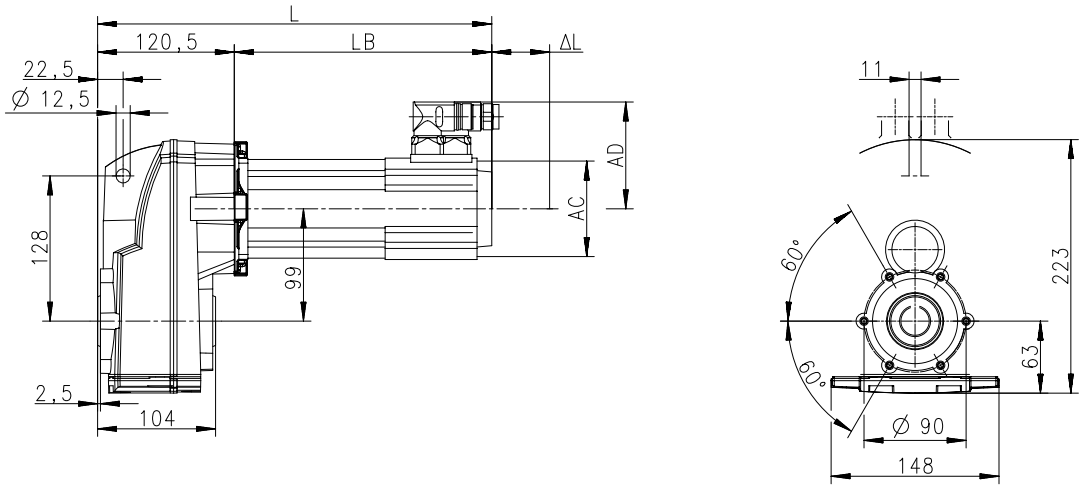

Product Motor

Produkt			MCS						
			06C41	06F41	06I41	09D41	09F38	09H41	09L41
Abmessungen									
Gesamtlänge	**L**	**[mm]**	~~252~~	282	312	304	324	344	384
Länge Motor	**LB**	**[mm]**	~~131.4~~	161.4	191.4	183.9	203.9	223.9	263.9
Länge Motoranbauten	**Δ L**	**[mm]**		100		71			
Motordurchmesser	**AC**	**[mm]**		86		89			
Abstand Motor/Anschluss	**AD**	**[mm]**		77		89.7			

Distance of motor centre to the end of connector

Total length of the drive without built-on accessories

Motor diameter

Motor length without built-on accessories

Additional length of the built-on accessories (longest version)



Dimensions, self-ventilated motors

g500-S130

Dimensions with hollow shaft

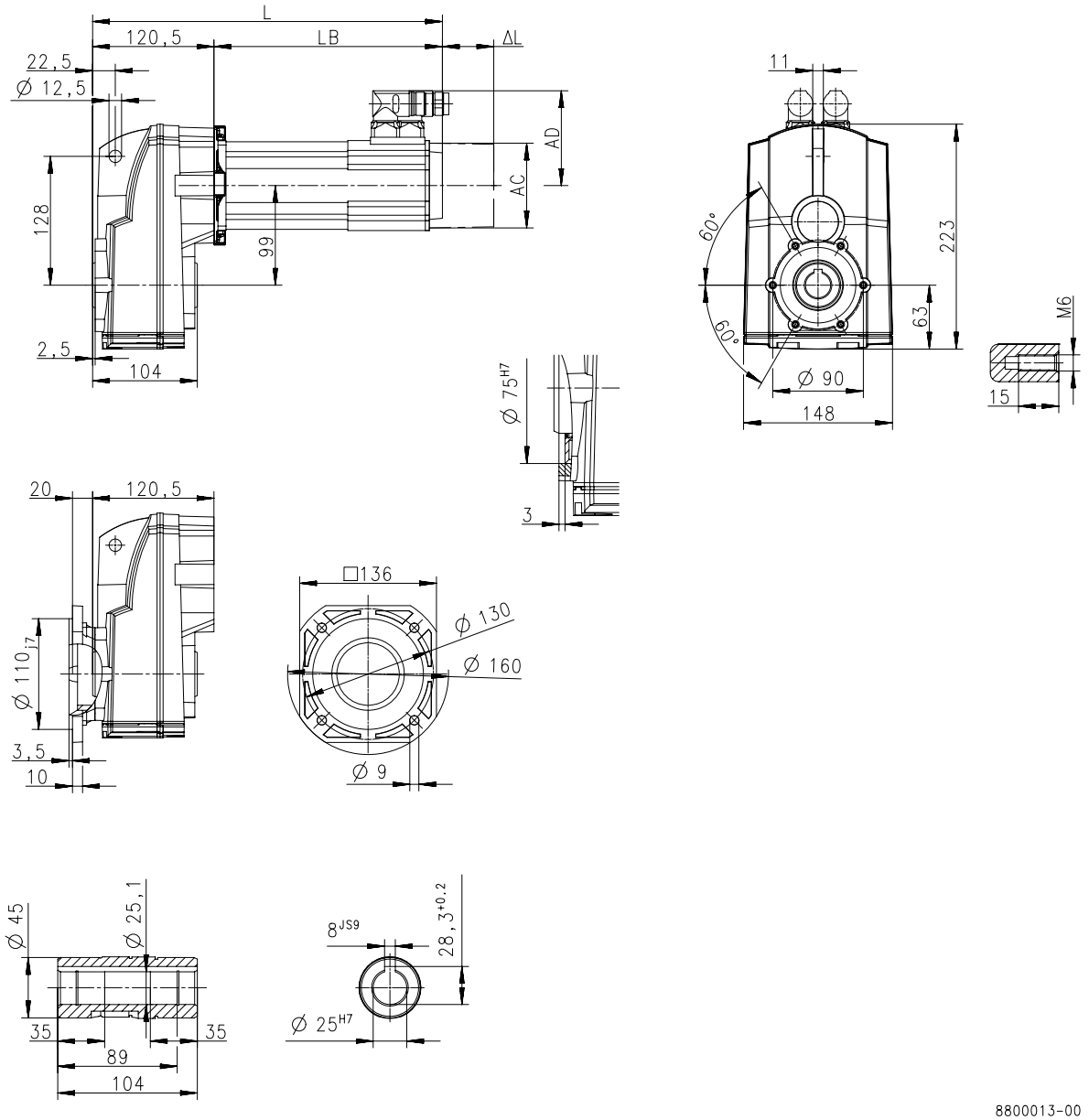

Product			MCS						
			06C41	06F41	06I41	09D41	09F38	09H41	09L41
Dimensions									
Total length	**L**	**[mm]**	252	282	312	304	324	344	384
Motor length	**LB**	**[mm]**	131.4	161.4	191.4	183.9	203.9	223.9	263.9
Length of motor options	**Δ L**	**[mm]**	100			71			
Motor diameter	**AC**	**[mm]**	86			89			
Distance motor/connection	**AD**	**[mm]**	77			89.7			



Dimensions, self-ventilated motors

g500-S130

Dimensions with solid shaft

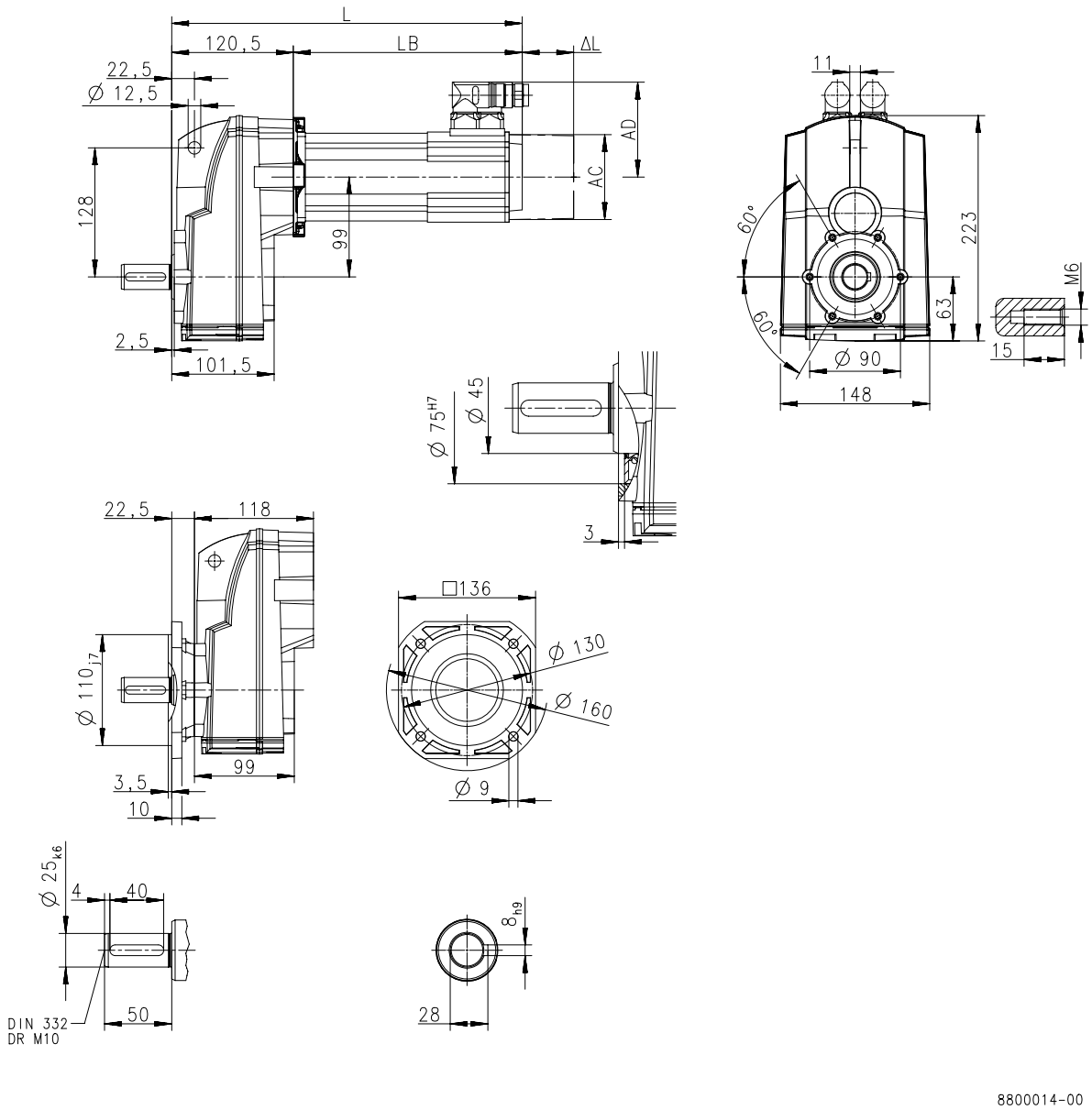

Product			MCS						
			06C41	06F41	06I41	09D41	09F38	09H41	09L41
Dimensions									
Total length	**L**	**[mm]**	252	282	312	304	324	344	384
Motor length	**LB**	**[mm]**	131.4	161.4	191.4	183.9	203.9	223.9	263.9
Length of motor options	**Δ L**	**[mm]**	100			71			
Motor diameter	**AC**	**[mm]**	86			89			
Distance motor/connection	**AD**	**[mm]**	77			89.7			



Dimensions, self-ventilated motors

g500-S130

Dimensions with solid shaft and foot

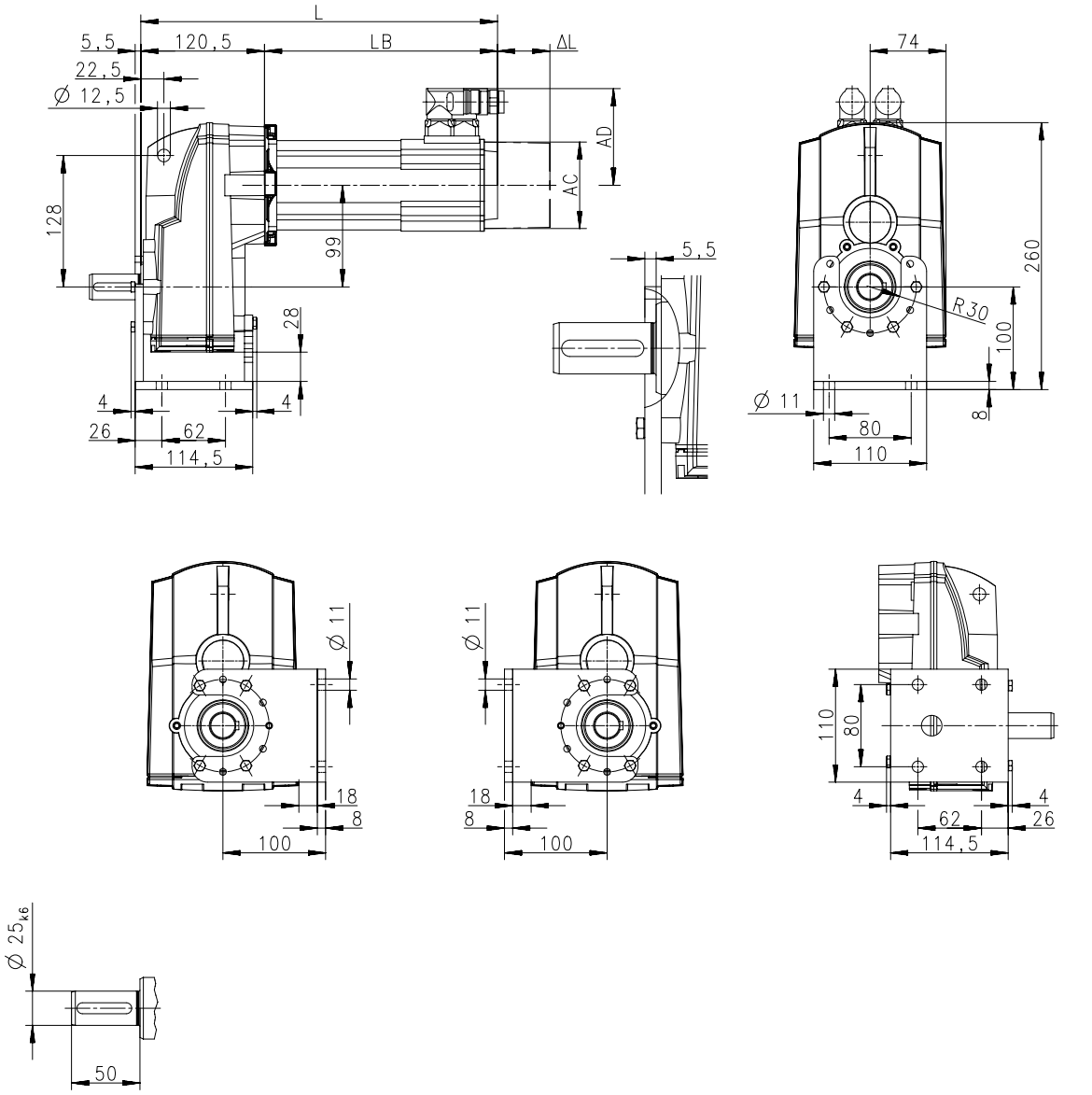

Product			MCS						
			06C41	06F41	06I41	09D41	09F38	09H41	09L41
Dimensions									
Total length	**L**	**[mm]**	252	282	312	304	324	344	384
Motor length	**LB**	**[mm]**	131.4	161.4	191.4	183.9	203.9	223.9	263.9
Length of motor options	**Δ L**	**[mm]**	100			71			
Motor diameter	**AC**	**[mm]**	86			89			
Distance motor/connection	**AD**	**[mm]**	77			89.7			



Dimensions, self-ventilated motors

g500-S130

Dimensions with shrink disc

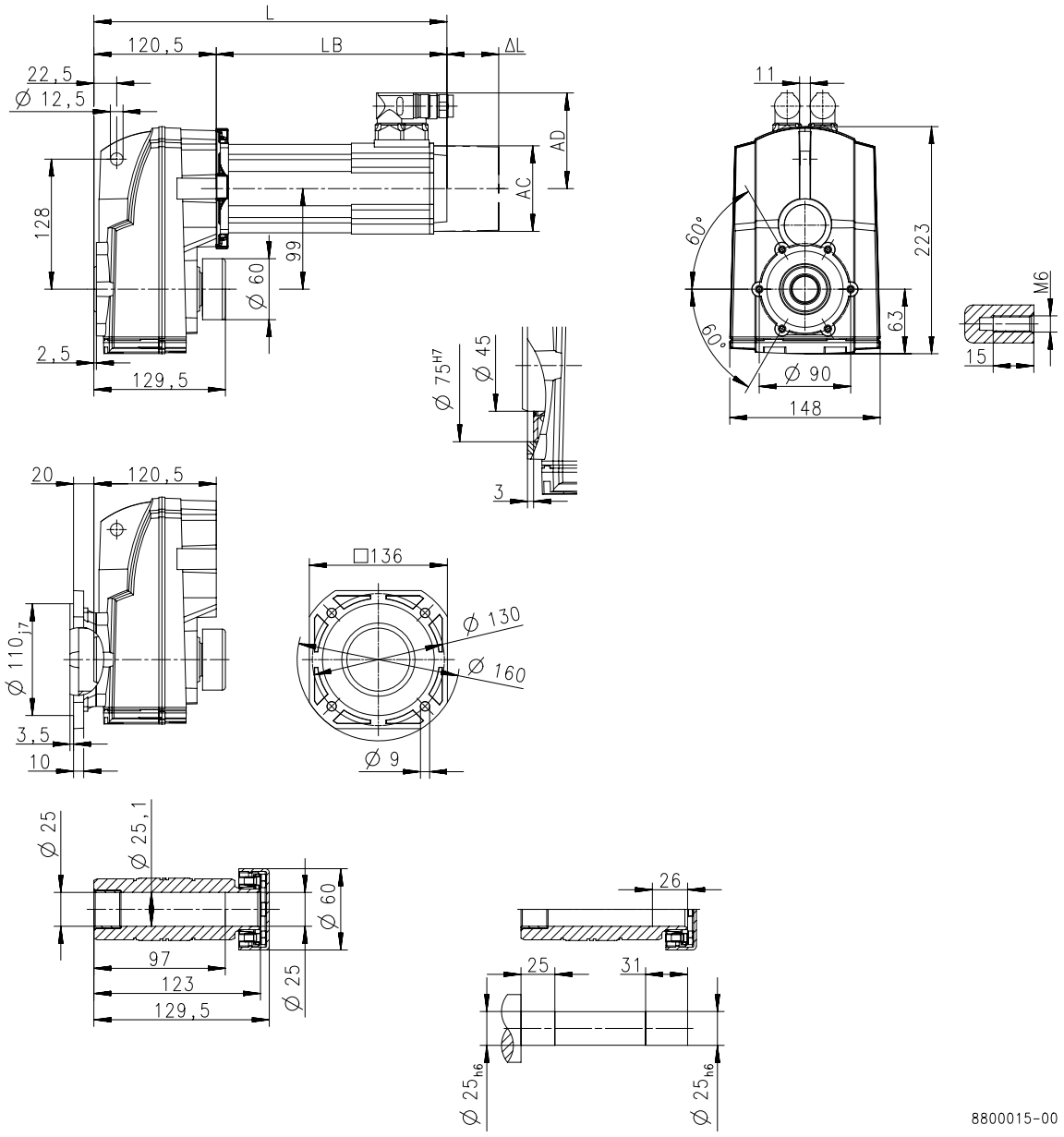

Product			MCS						
			06C41	06F41	06I41	09D41	09F38	09H41	09L41
Dimensions									
Total length	**L**	**[mm]**	252	282	312	304	324	344	384
Motor length	**LB**	**[mm]**	131.4	161.4	191.4	183.9	203.9	223.9	263.9
Length of motor options	**Δ L**	**[mm]**	100			71			
Motor diameter	**AC**	**[mm]**	86			89			
Distance motor/connection	**AD**	**[mm]**	77			89.7			



Dimensions, self-ventilated motors

g500-S220

Dimensions with hollow shaft

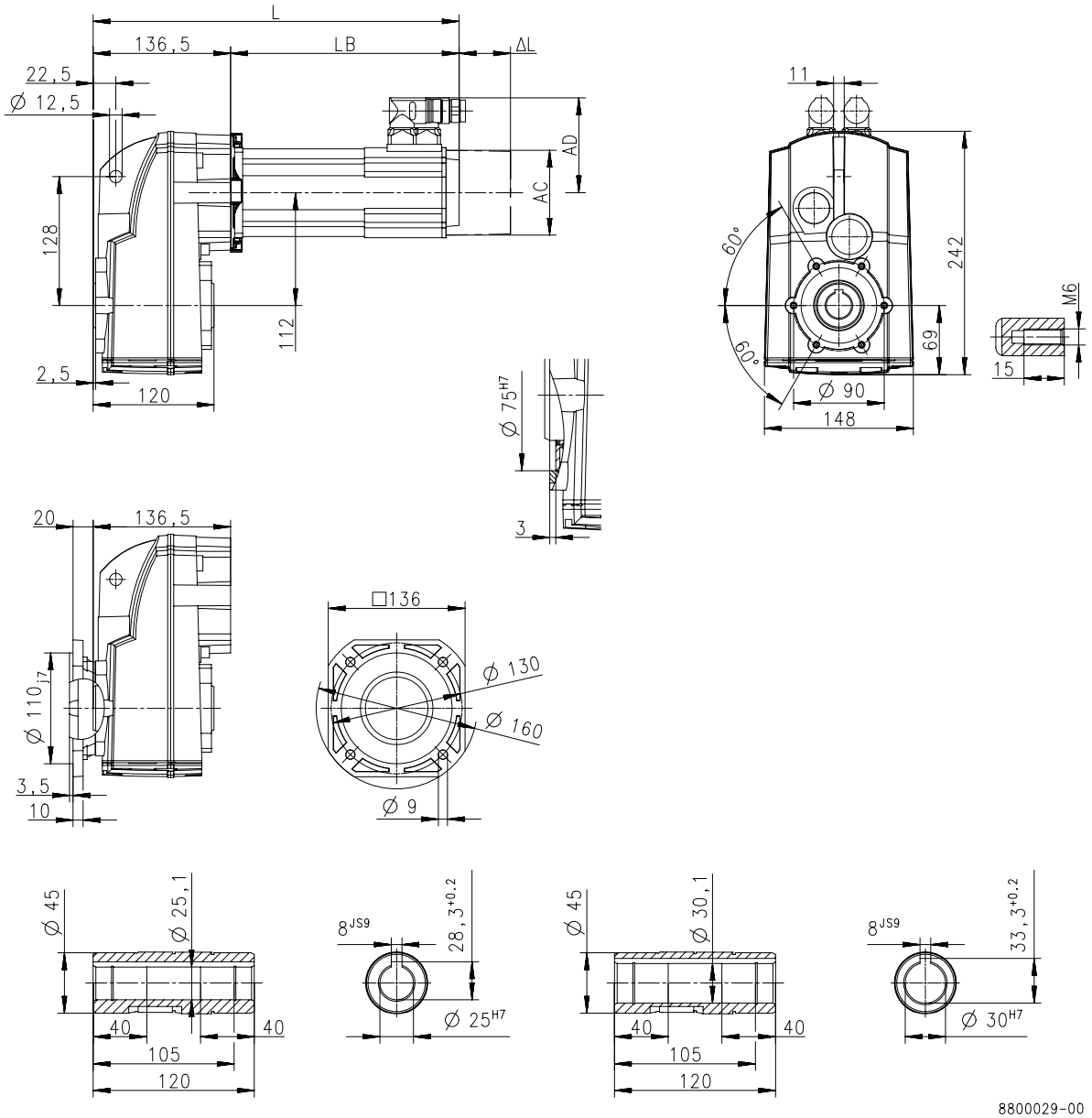

Product			MCS					
			06C41	06F41	06I41	09D41	09F38	09H41
Dimensions								
Total length	**L**	**[mm]**	268	298	328	320	340	360
Motor length	**LB**	**[mm]**	131.4	161.4	191.4	183.9	203.9	223.9
Length of motor options	**Δ L**	**[mm]**	100			71		
Motor diameter	**AC**	**[mm]**	86			89		
Distance motor/connection	**AD**	**[mm]**	77			89.7		



Dimensions, self-ventilated motors

g500-S220

Dimensions with hollow shaft

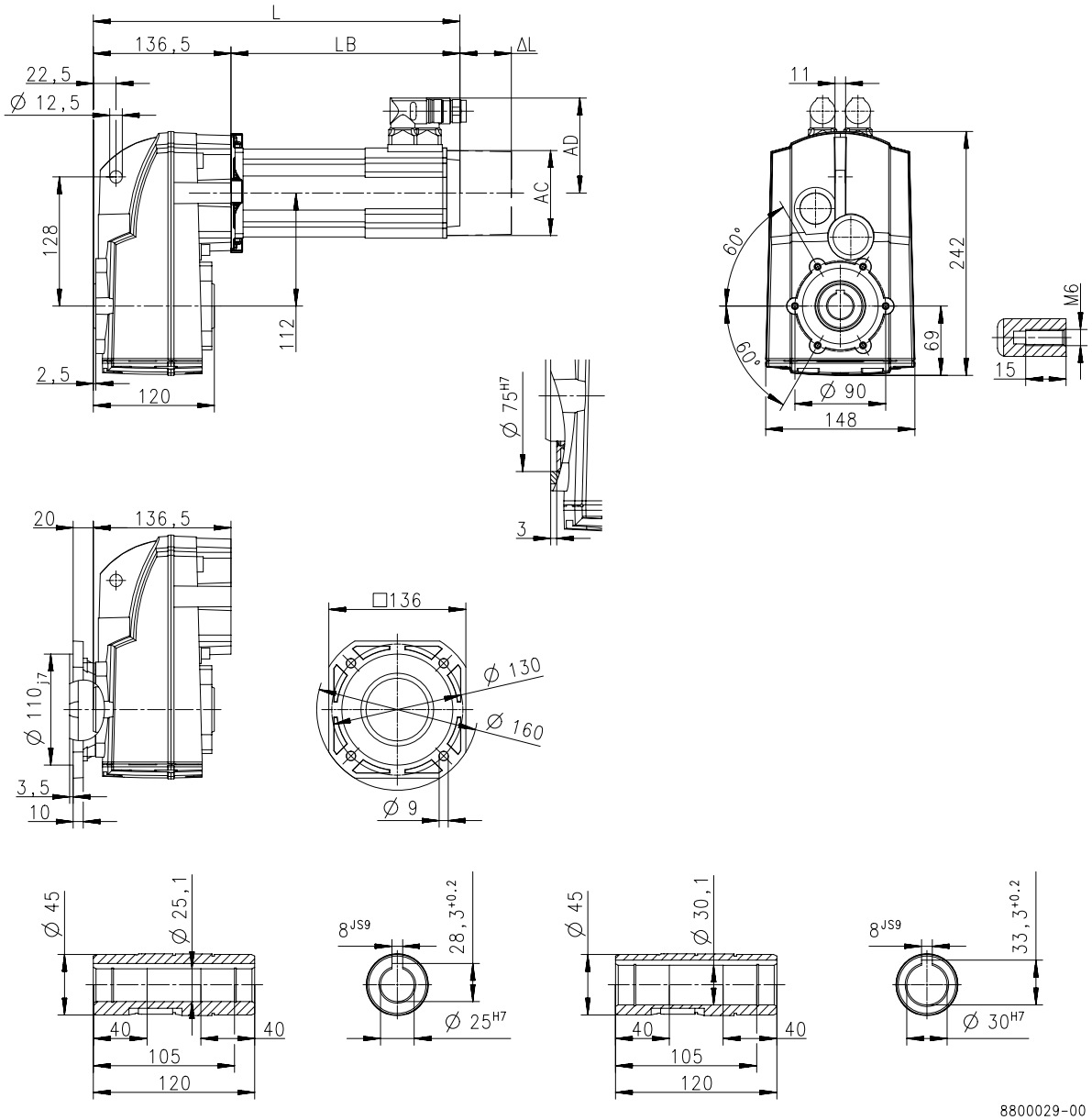

Product			MCS						
			09L41	12D20	12D41	12H15	12H30	12H35	12L20
Dimensions									
Total length	**L**	**[mm]**	400	337		377			417
Motor length	**LB**	**[mm]**	263.9	200.5		240.5			280.5
Length of motor options	**Δ L**	**[mm]**	71	69					
Motor diameter	**AC**	**[mm]**	89	116					
Distance motor/connection	**AD**	**[mm]**	89.7	105					



Dimensions, self-ventilated motors

g500-S220

Dimensions with solid shaft

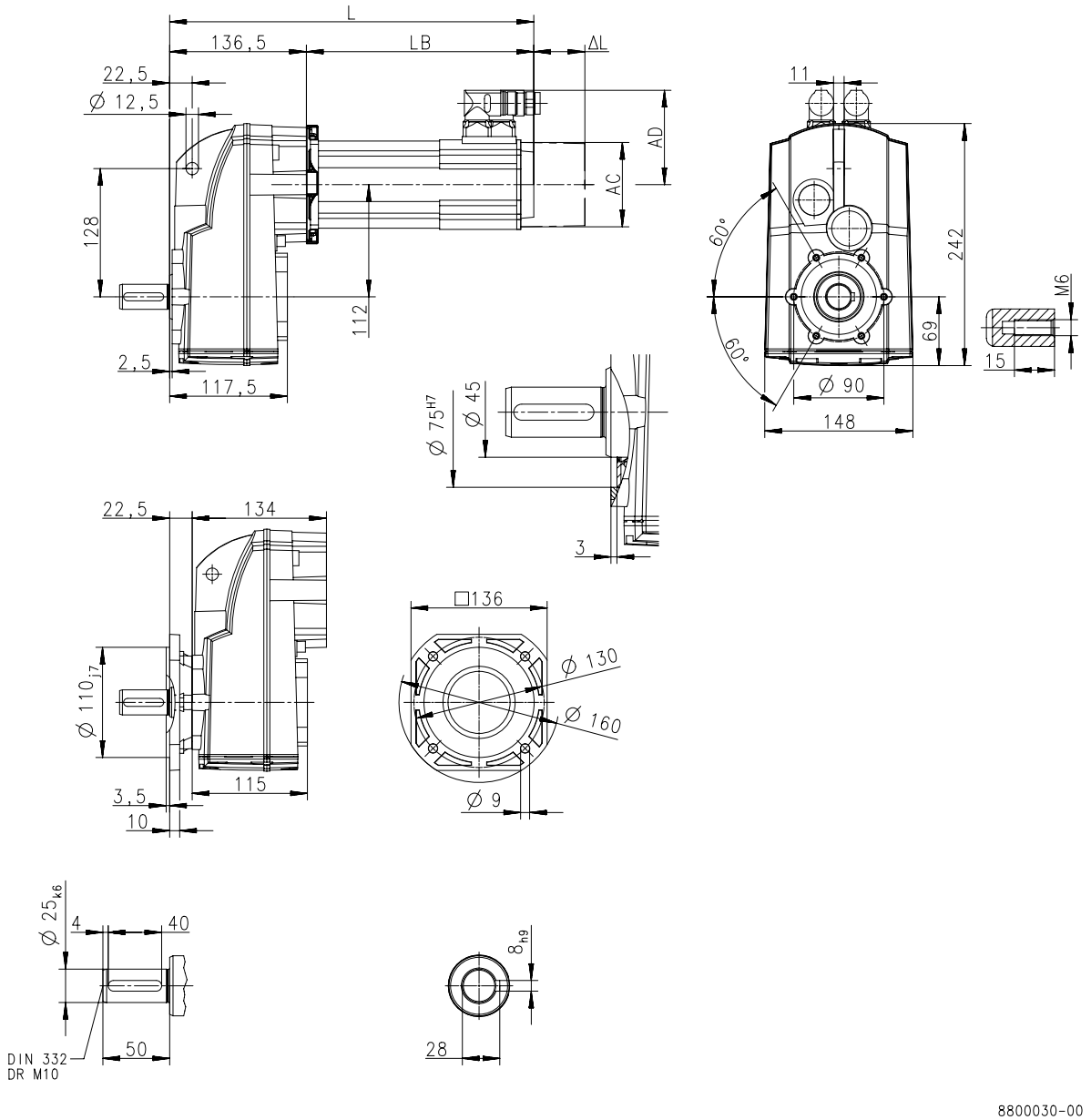

Product			MCS					
			06C41	06F41	06I41	09D41	09F38	09H41
Dimensions								
Total length	**L**	**[mm]**	268	298	328	320	340	360
Motor length	**LB**	**[mm]**	131.4	161.4	191.4	183.9	203.9	223.9
Length of motor options	**Δ L**	**[mm]**	100			71		
Motor diameter	**AC**	**[mm]**	86			89		
Distance motor/connection	**AD**	**[mm]**	77			89.7		



Dimensions, self-ventilated motors

g500-S220

Dimensions with solid shaft

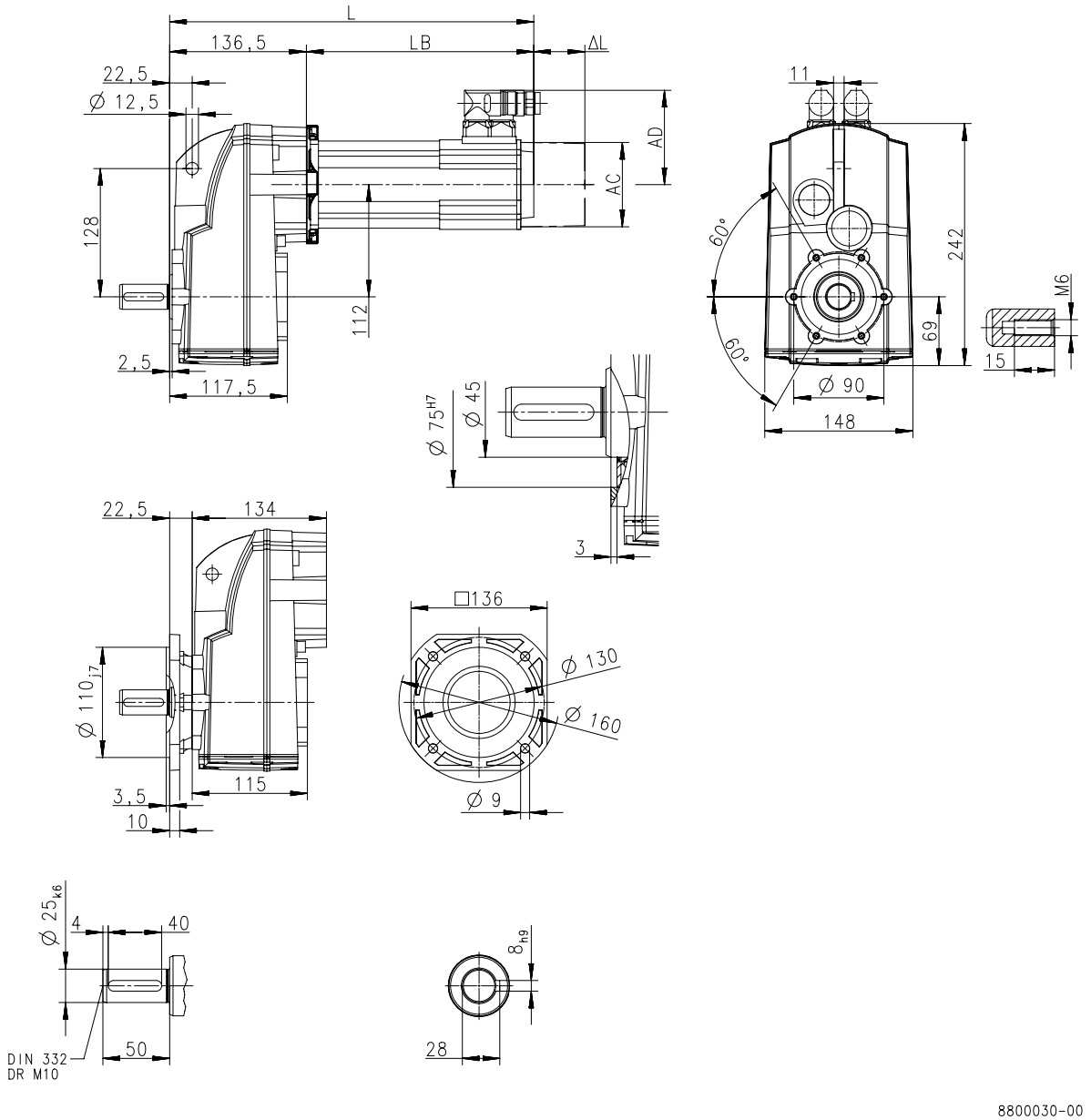

Product			MCS						
			09L41	12D20	12D41	12H15	12H30	12H35	12L20
Dimensions									
Total length	**L**	**[mm]**	400	337		377			417
Motor length	**LB**	**[mm]**	263.9	200.5		240.5			280.5
Length of motor options	**Δ L**	**[mm]**	71	69					
Motor diameter	**AC**	**[mm]**	89	116					
Distance motor/connection	**AD**	**[mm]**	89.7	105					



Dimensions, self-ventilated motors

g500-S220

Dimensions with solid shaft and foot

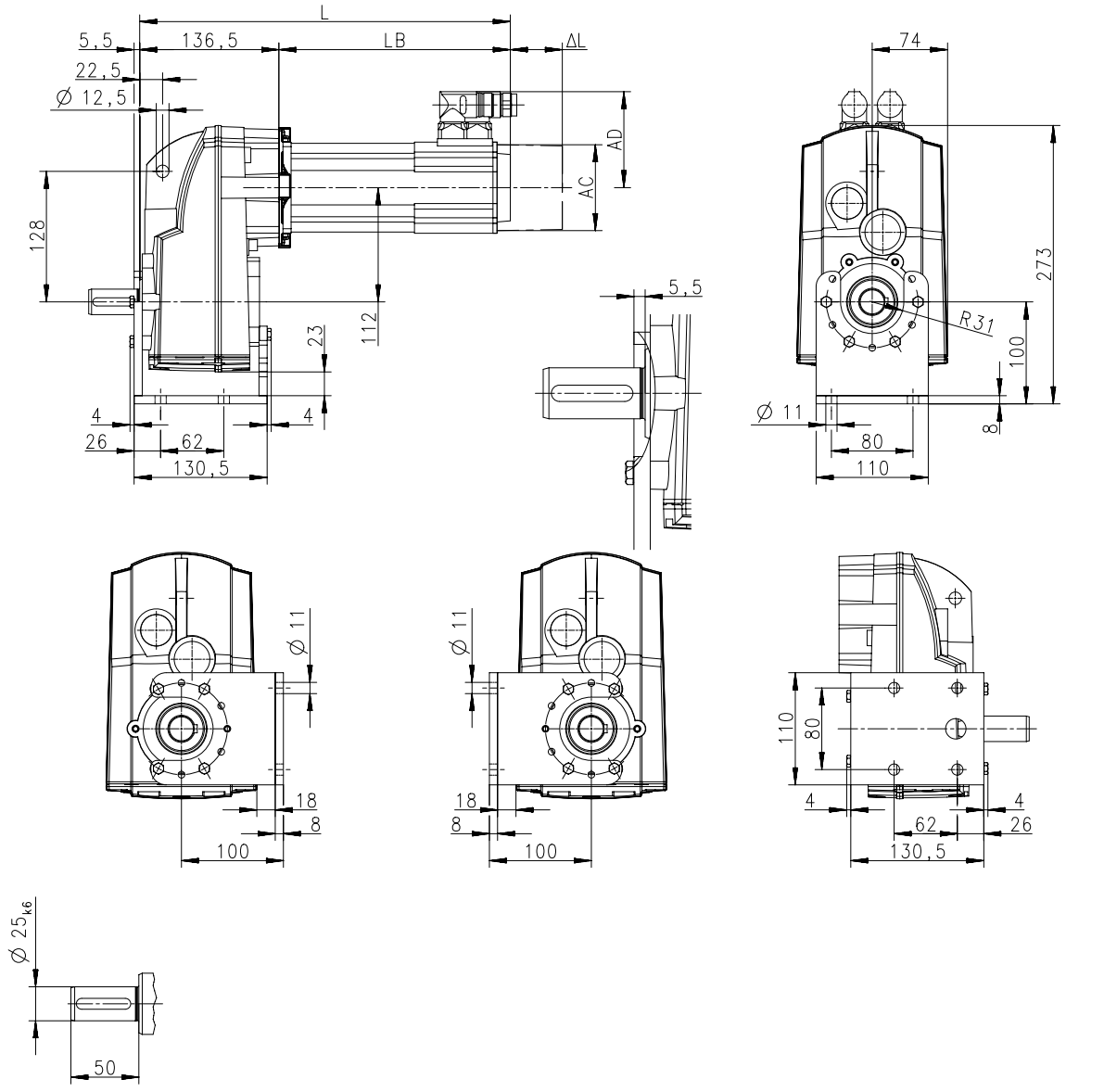

Product			MCS					
			06C41	06F41	06I41	09D41	09F38	09H41
Dimensions								
Total length	**L**	**[mm]**	268	298	328	320	340	360
Motor length	**LB**	**[mm]**	131.4	161.4	191.4	183.9	203.9	223.9
Length of motor options	**Δ L**	**[mm]**	100			71		
Motor diameter	**AC**	**[mm]**	86			89		
Distance motor/connection	**AD**	**[mm]**	77			89.7		



Dimensions, self-ventilated motors

g500-S220

Dimensions with solid shaft and foot

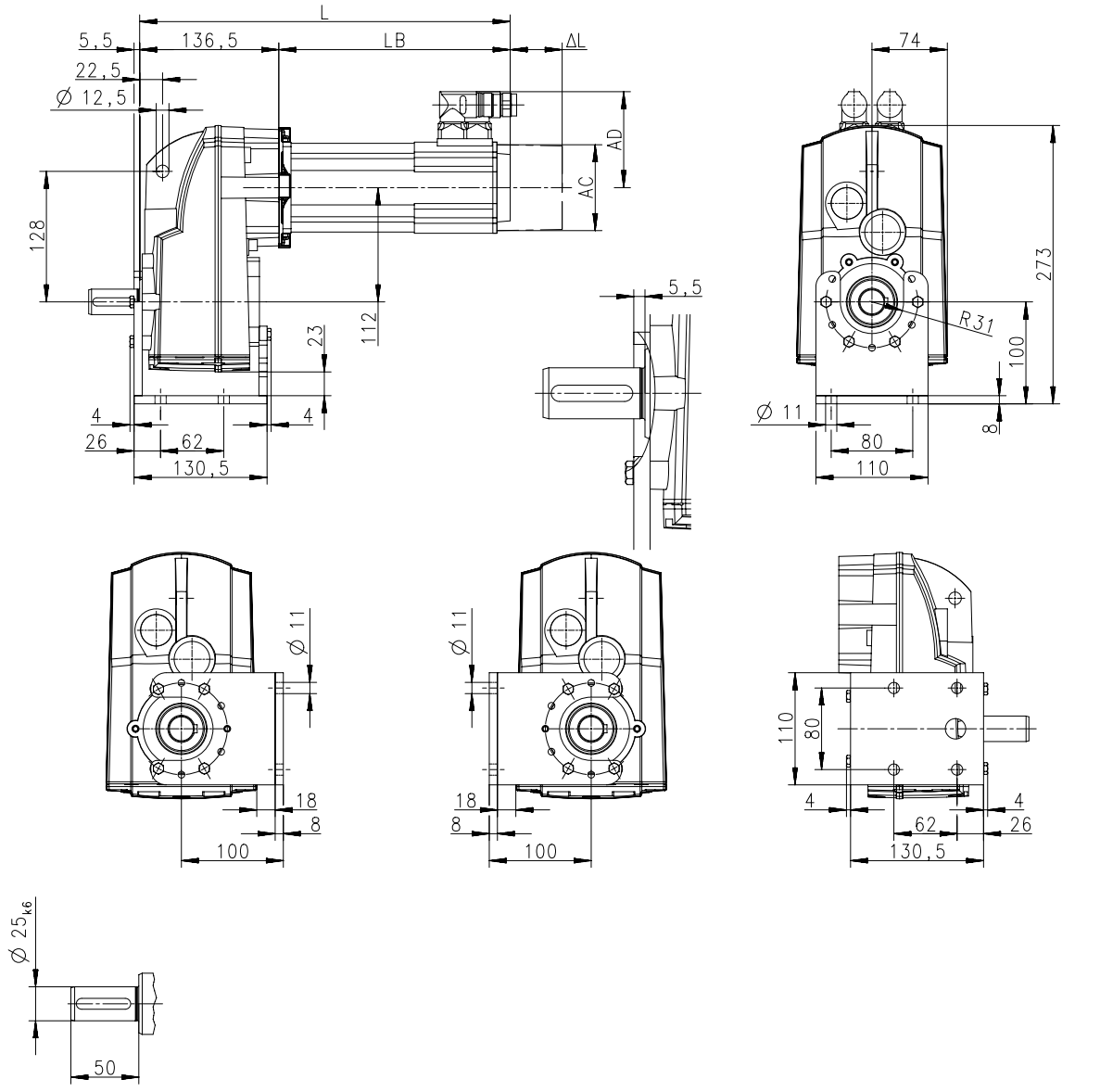

Product			MCS						
			09L41	12D20	12D41	12H15	12H30	12H35	12L20
Dimensions									
Total length	**L**	**[mm]**	400	337		377			417
Motor length	**LB**	**[mm]**	263.9	200.5		240.5			280.5
Length of motor options	**Δ L**	**[mm]**	71	69					
Motor diameter	**AC**	**[mm]**	89	116					
Distance motor/connection	**AD**	**[mm]**	89.7	105					



Dimensions, self-ventilated motors

g500-S220

Dimensions with shrink disc

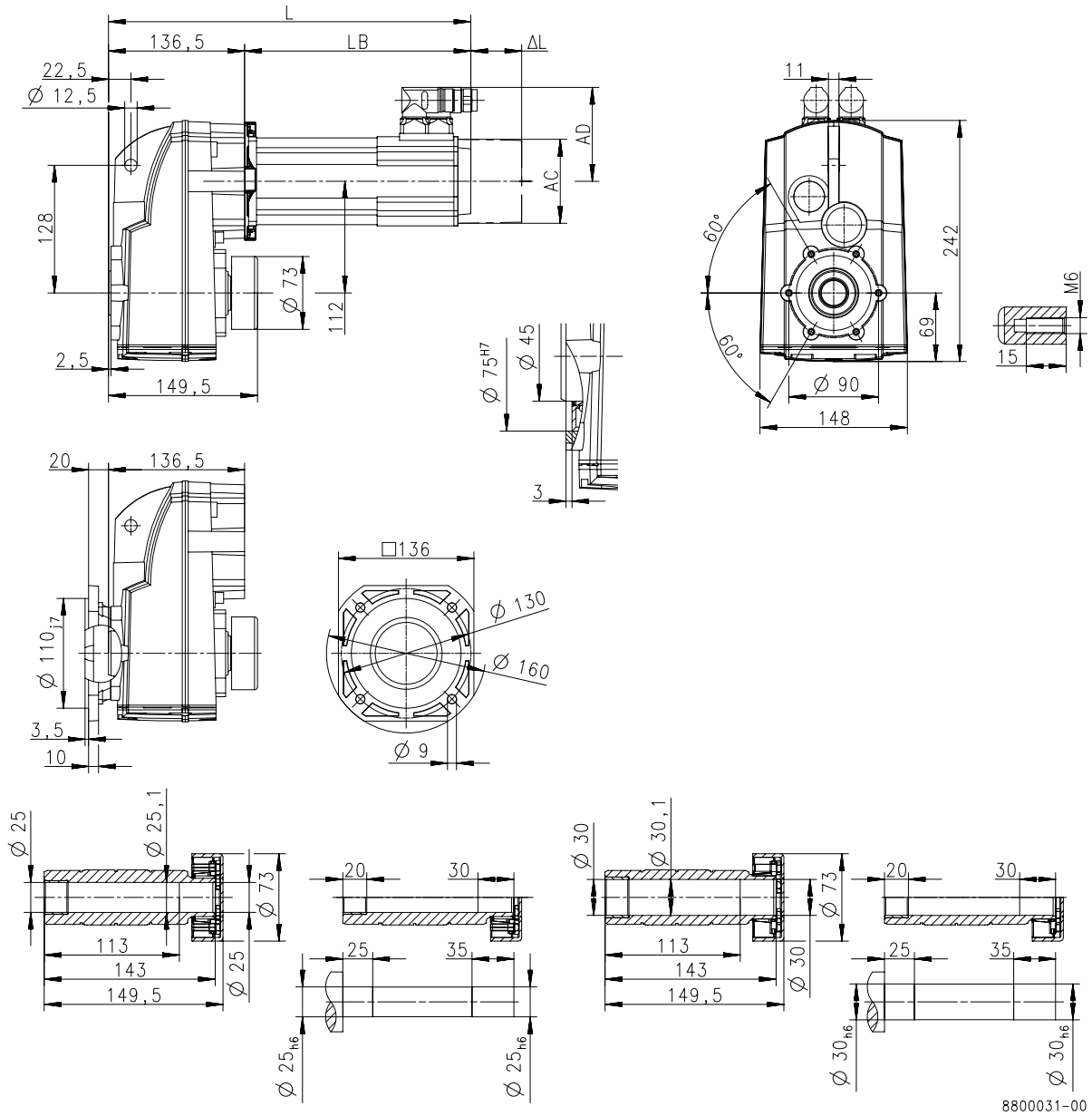

Product			MCS					
			06C41	06F41	06I41	09D41	09F38	09H41
Dimensions								
Total length	**L**	**[mm]**	268	298	328	320	340	360
Motor length	**LB**	**[mm]**	131.4	161.4	191.4	183.9	203.9	223.9
Length of motor options	**Δ L**	**[mm]**	100			71		
Motor diameter	**AC**	**[mm]**	86			89		
Distance motor/connection	**AD**	**[mm]**	77			89.7		



Dimensions, self-ventilated motors

g500-S220

Dimensions with shrink disc

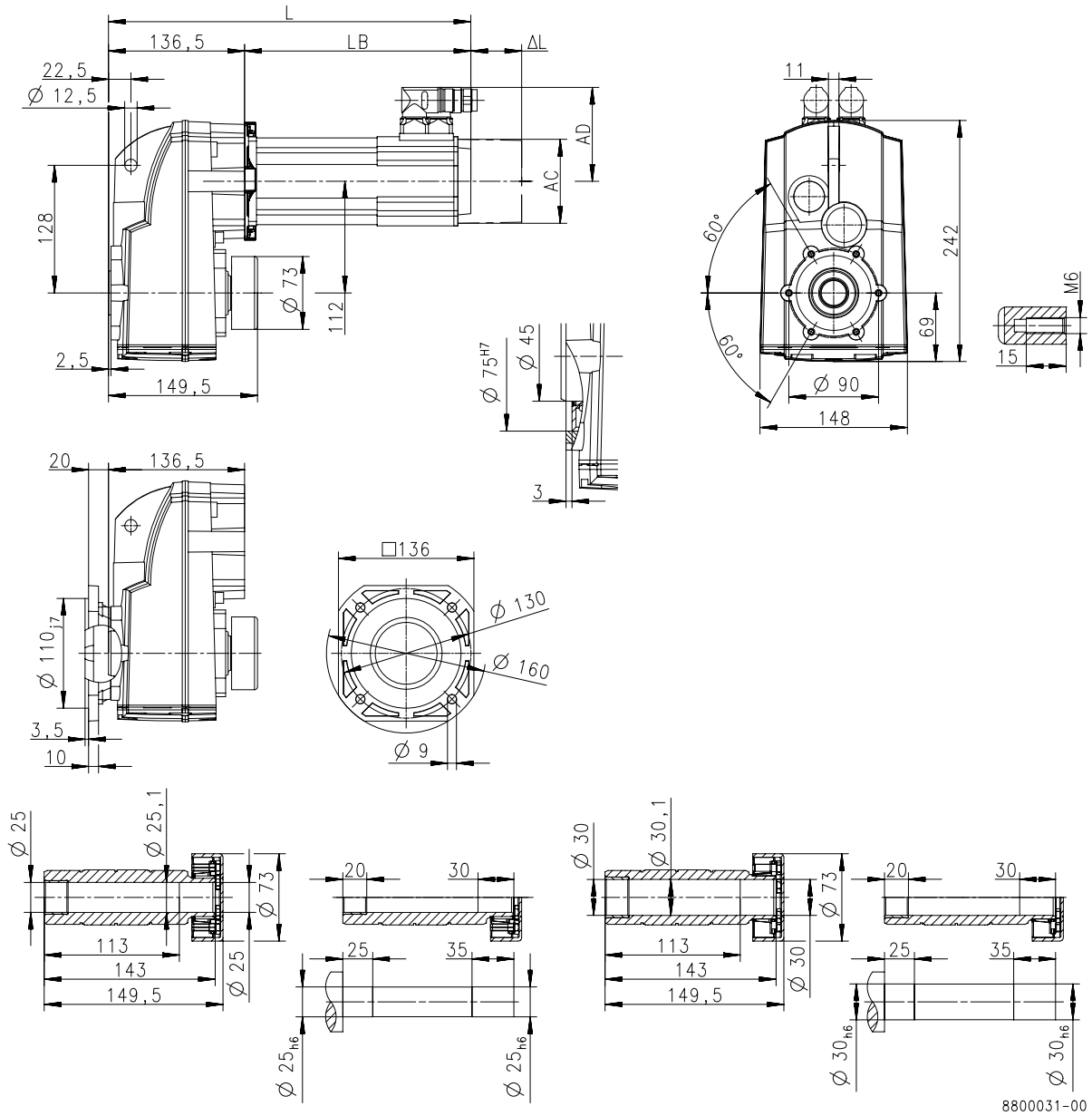

Product			MCS						
			09L41	12D20	12D41	12H15	12H30	12H35	12L20
Dimensions									
Total length	**L**	**[mm]**	400	337		377			417
Motor length	**LB**	**[mm]**	263.9	200.5		240.5			280.5
Length of motor options	**Δ L**	**[mm]**	71	69					
Motor diameter	**AC**	**[mm]**	89	116					
Distance motor/connection	**AD**	**[mm]**	89.7	105					



Dimensions, self-ventilated motors

g500-S400

Dimensions with hollow shaft

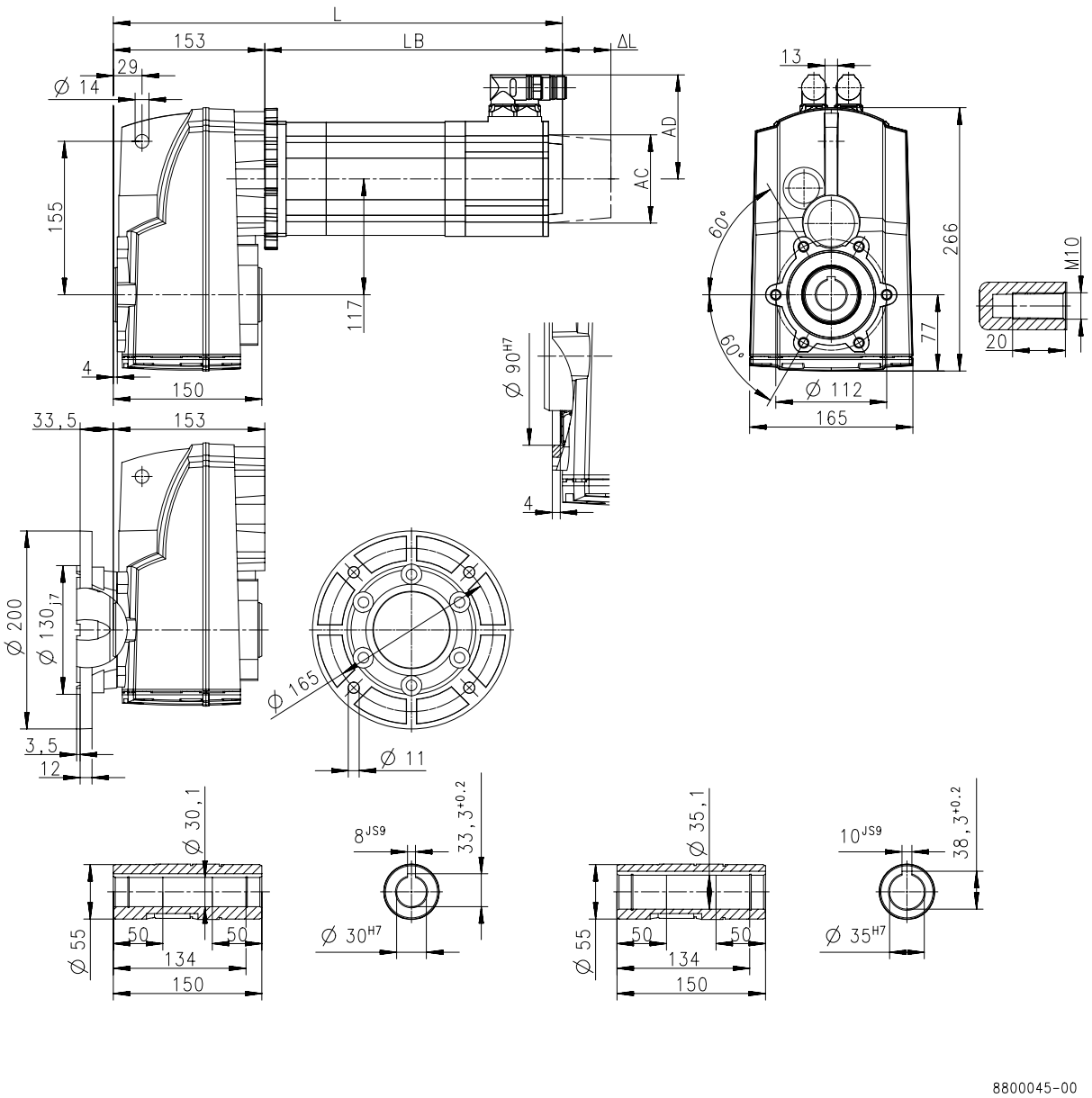

Product			MCS								
			06C41	06F41	06I41	09D41	09F38	09H41	09L41	12D20	12D41
Dimensions											
Total length	**L**	**[mm]**	284	314	344	337	357	377	417	354	
Motor length	**LB**	**[mm]**	131.4	161.4	191.4	183.9	203.9	223.9	263.9	200.5	
Length of motor options	**Δ L**	**[mm]**	100			71				69	
Motor diameter	**AC**	**[mm]**	86			89				116	
Distance motor/connection	**AD**	**[mm]**	77			89.7				105	



Dimensions, self-ventilated motors

g500-S400

Dimensions with hollow shaft

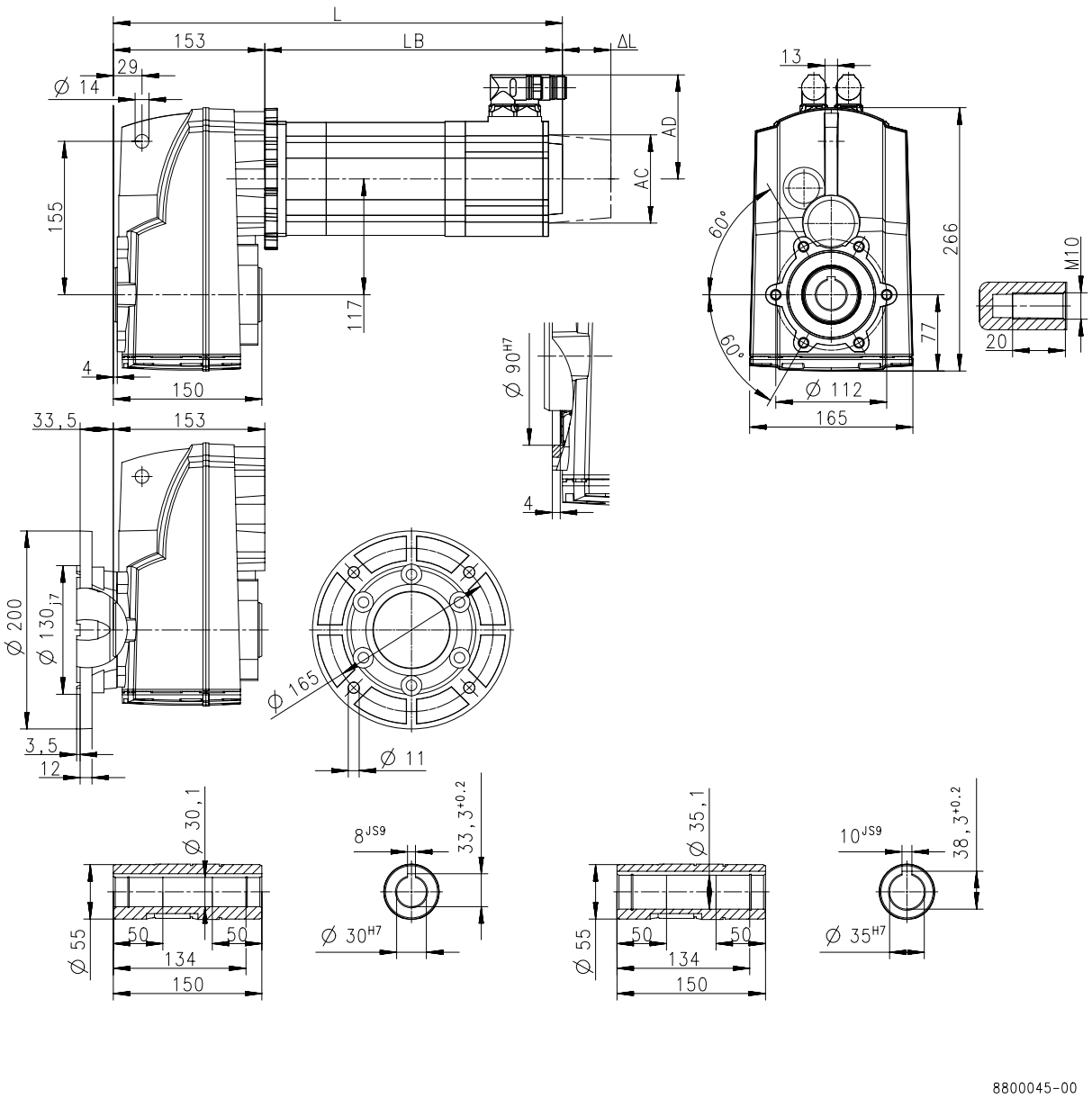

Product			MCS									
			12H15	12H30	12H35	12L20	14D15	14H15	14H32	14L15	14L32	14P14
Dimensions												
Total length	**L**	**[mm]**	394			434	369	409		449		489
Motor length	**LB**	**[mm]**	240.5			280.5	216	256		296		336
Length of motor options	**Δ L**	**[mm]**	69				78					
Motor diameter	**AC**	**[mm]**	116				143					
Distance motor/connection	**AD**	**[mm]**	105				116.5				146	116.5



Dimensions, self-ventilated motors

g500-S400

Dimensions with solid shaft

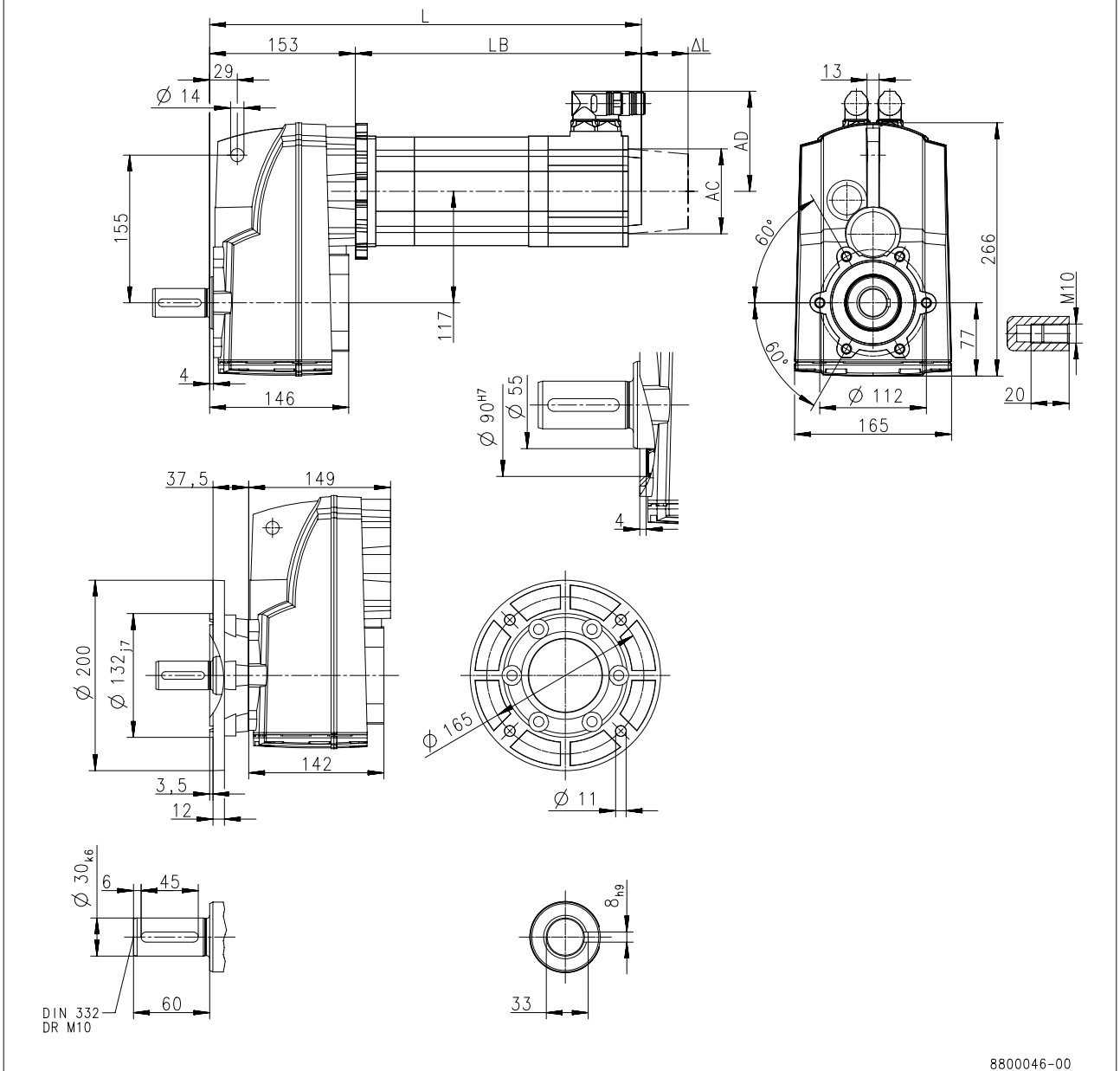

Product			MCS								
			06C41	06F41	06I41	09D41	09F38	09H41	09L41	12D20	12D41
Dimensions											
Total length	**L**	**[mm]**	284	314	344	337	357	377	417	354	
Motor length	**LB**	**[mm]**	131.4	161.4	191.4	183.9	203.9	223.9	263.9	200.5	
Length of motor options	**Δ L**	**[mm]**	100			71				69	
Motor diameter	**AC**	**[mm]**	86			89				116	
Distance motor/connection	**AD**	**[mm]**	77			89.7				105	



Dimensions, self-ventilated motors

g500-S400

Dimensions with solid shaft

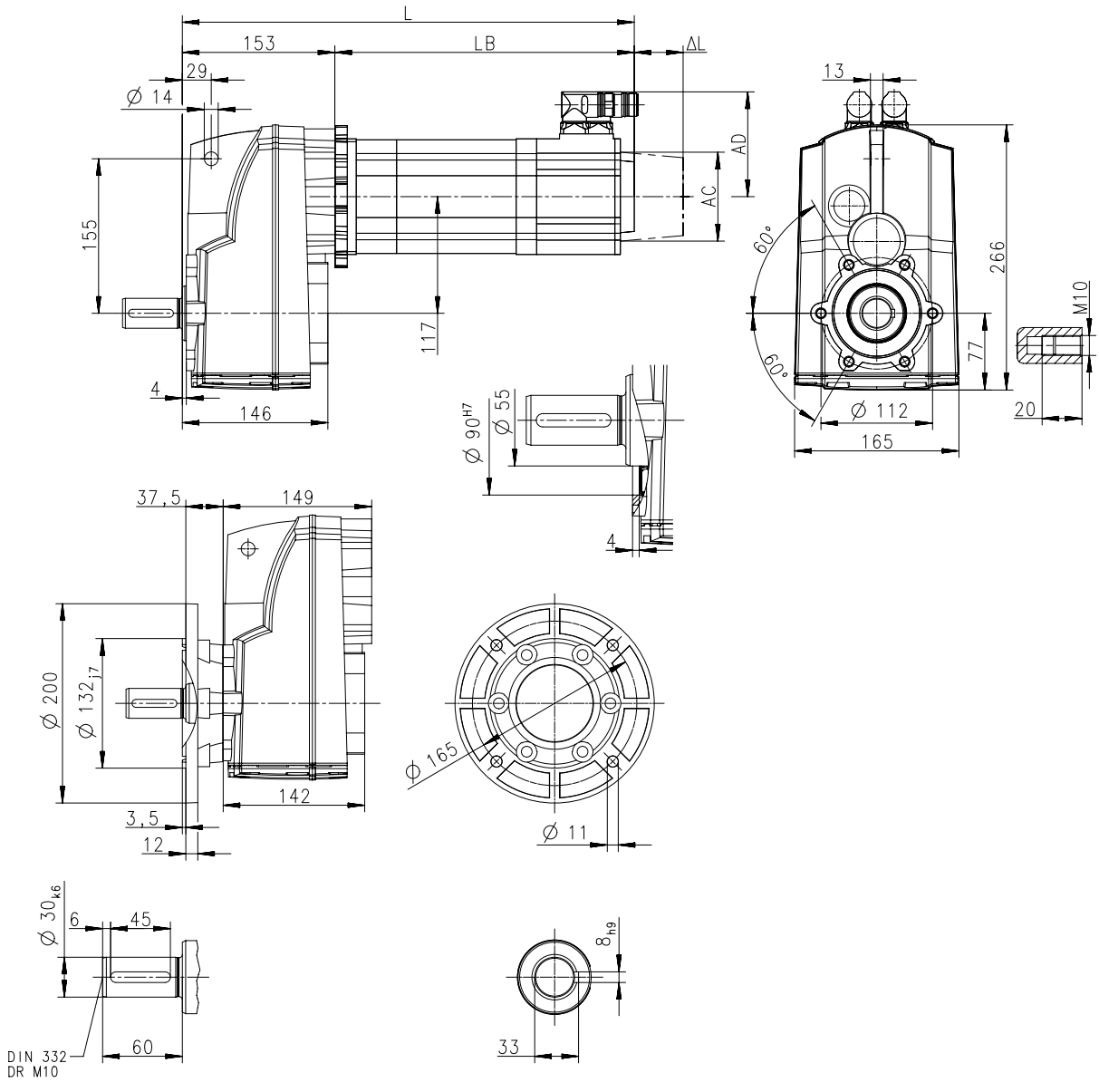

Product			MCS									
			12H15	12H30	12H35	12L20	14D15	14H15	14H32	14L15	14L32	14P14
Dimensions												
Total length	**L**	**[mm]**	394			434	369	409		449		489
Motor length	**LB**	**[mm]**	240.5			280.5	216	256		296		336
Length of motor options	**Δ L**	**[mm]**	69				78					
Motor diameter	**AC**	**[mm]**	116				143					
Distance motor/connection	**AD**	**[mm]**	105				116.5				146	116.5



Dimensions, self-ventilated motors

g500-S400

Dimensions with solid shaft and foot

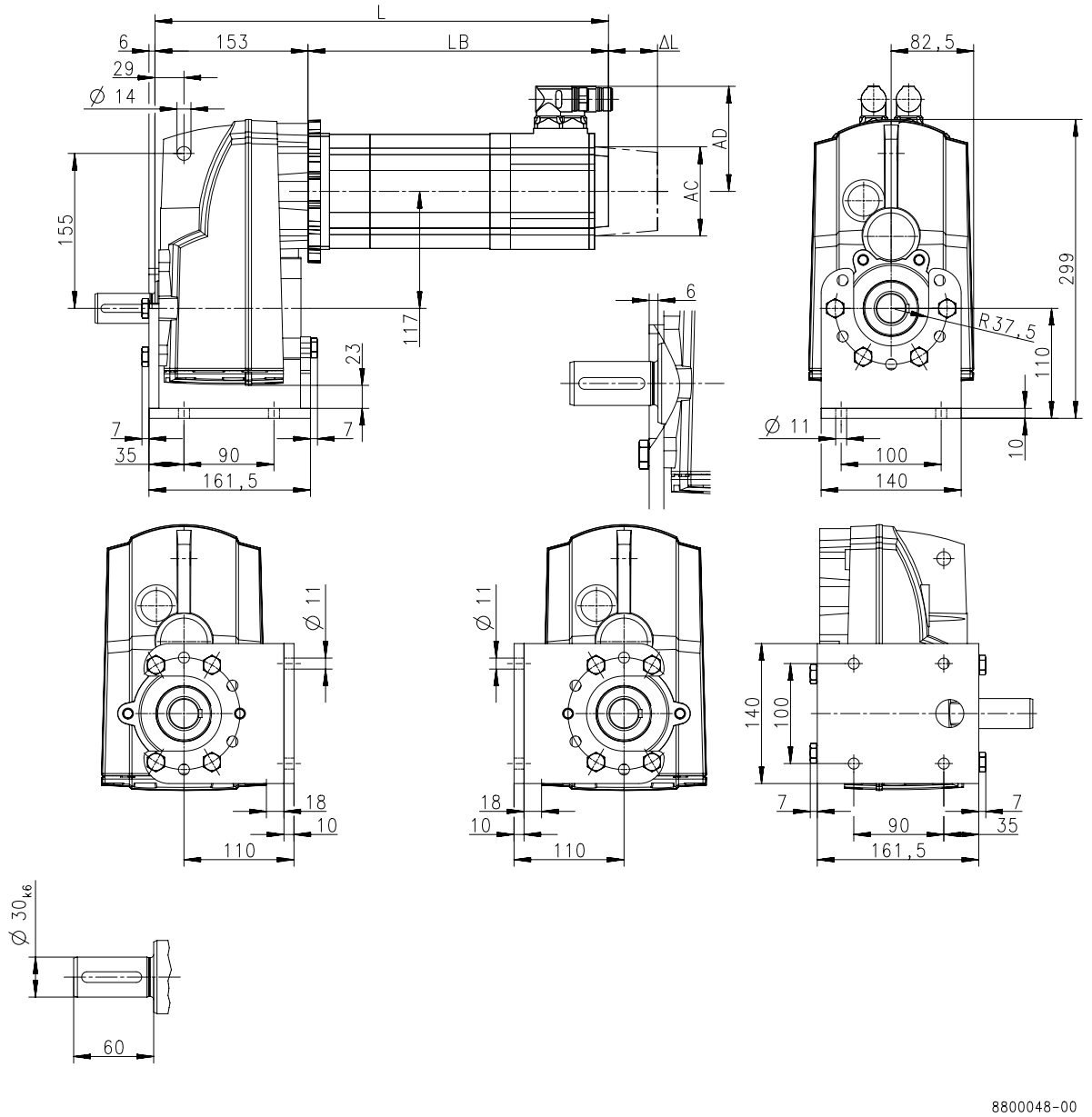

Product			MCS								
			06C41	06F41	06I41	09D41	09F38	09H41	09L41	12D20	12D41
Dimensions											
Total length	**L**	**[mm]**	284	314	344	337	357	377	417	354	
Motor length	**LB**	**[mm]**	131.4	161.4	191.4	183.9	203.9	223.9	263.9	200.5	
Length of motor options	**Δ L**	**[mm]**	100			71				69	
Motor diameter	**AC**	**[mm]**	86			89				116	
Distance motor/connection	**AD**	**[mm]**	77			89.7				105	



Dimensions, self-ventilated motors

g500-S400

Dimensions with solid shaft and foot

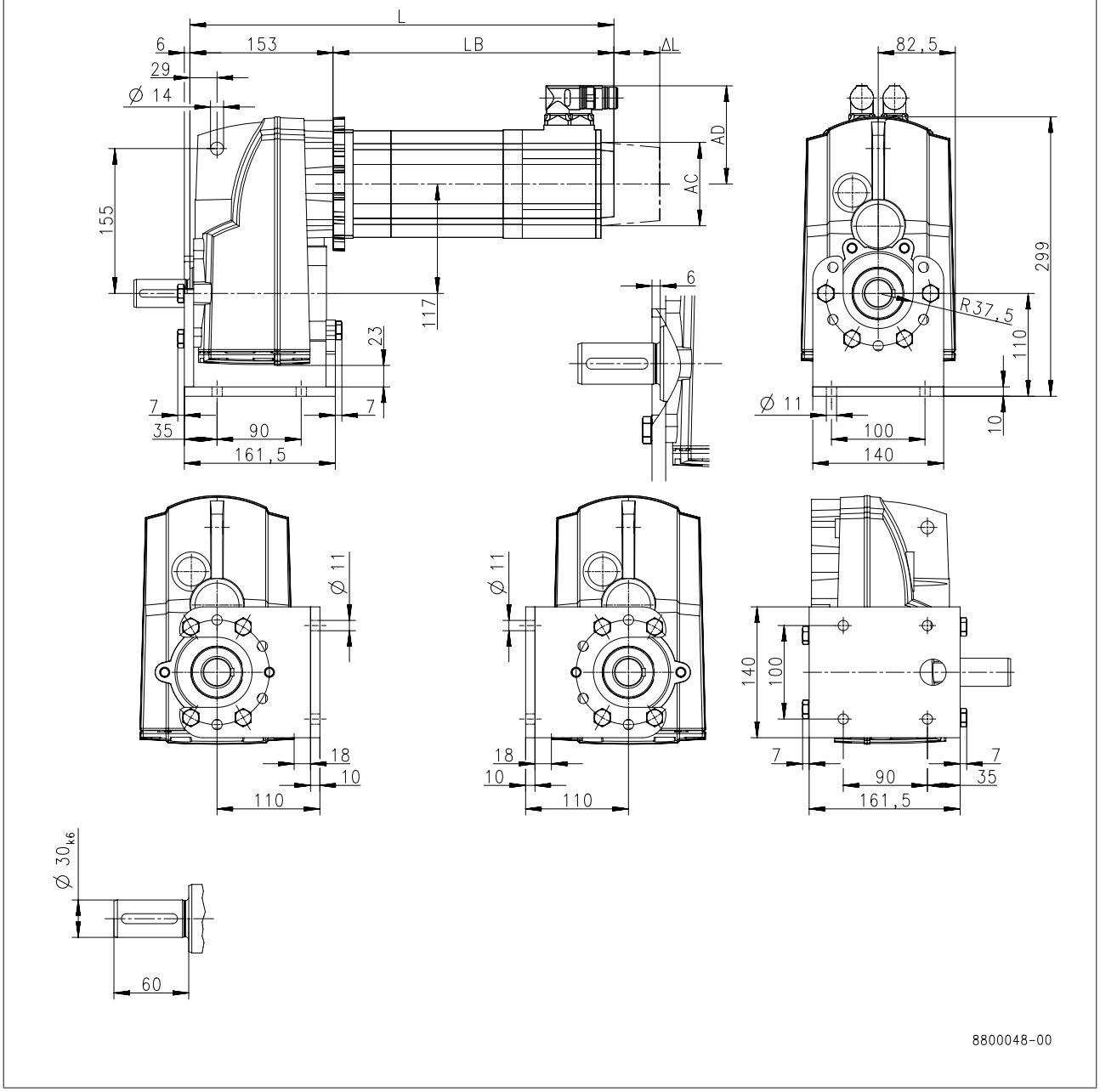

Product			MCS									
			12H15	12H30	12H35	12L20	14D15	14H15	14H32	14L15	14L32	14P14
Dimensions												
Total length	**L**	**[mm]**	394			434	369	409		449		489
Motor length	**LB**	**[mm]**	240.5			280.5	216	256		296		336
Length of motor options	**Δ L**	**[mm]**	69				78					
Motor diameter	**AC**	**[mm]**	116				143					
Distance motor/connection	**AD**	**[mm]**	105				116.5				146	116.5



Dimensions, self-ventilated motors

g500-S400

Dimensions with shrink disc

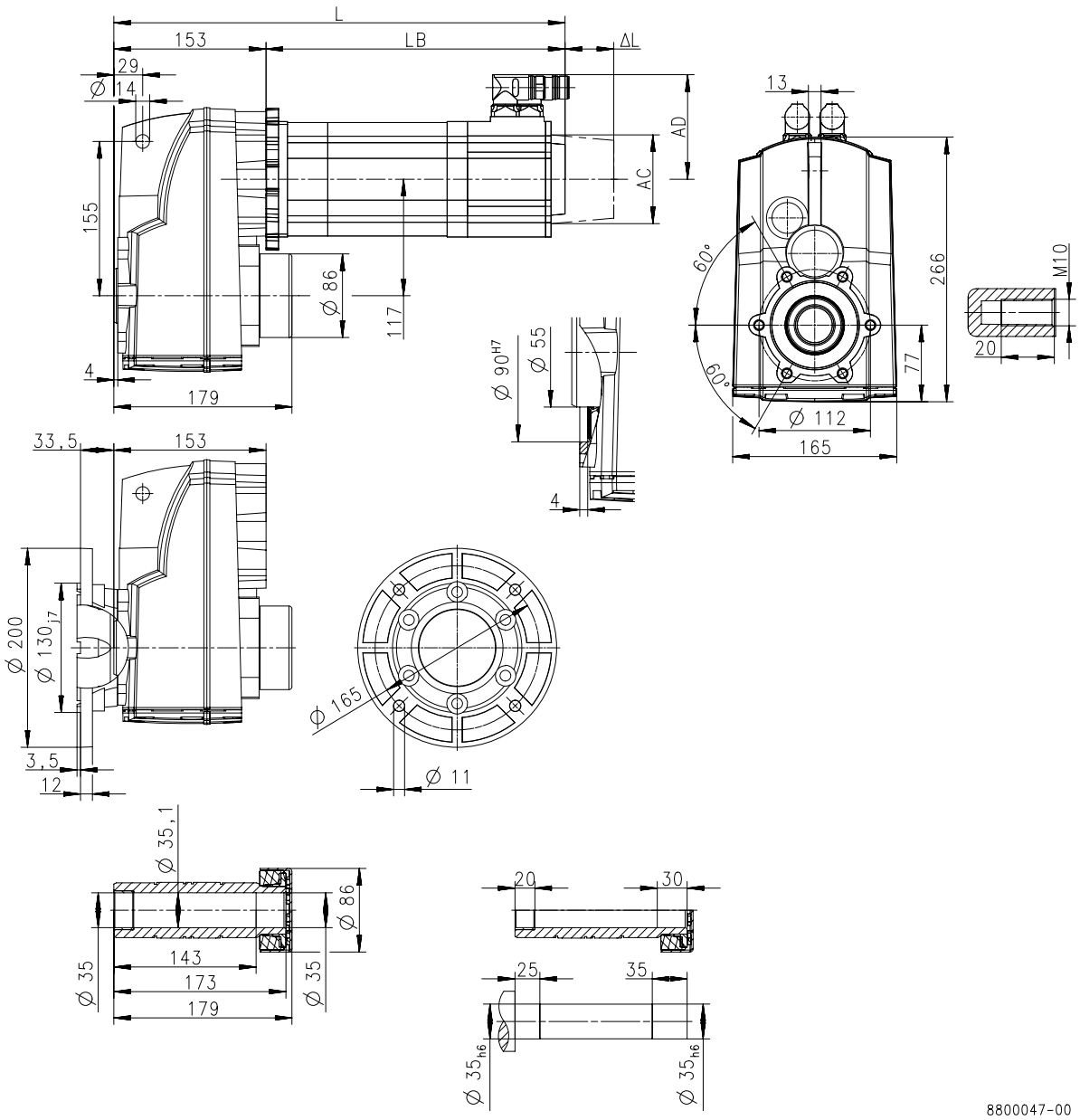

Product			MCS								
			06C41	06F41	06I41	09D41	09F38	09H41	09L41	12D20	12D41
Dimensions											
Total length	**L**	**[mm]**	284	314	344	337	357	377	417	354	
Motor length	**LB**	**[mm]**	131.4	161.4	191.4	183.9	203.9	223.9	263.9	200.5	
Length of motor options	**Δ L**	**[mm]**	100			71				69	
Motor diameter	**AC**	**[mm]**	86			89				116	
Distance motor/connection	**AD**	**[mm]**	77			89.7				105	



Dimensions, self-ventilated motors

g500-S400

Dimensions with shrink disc

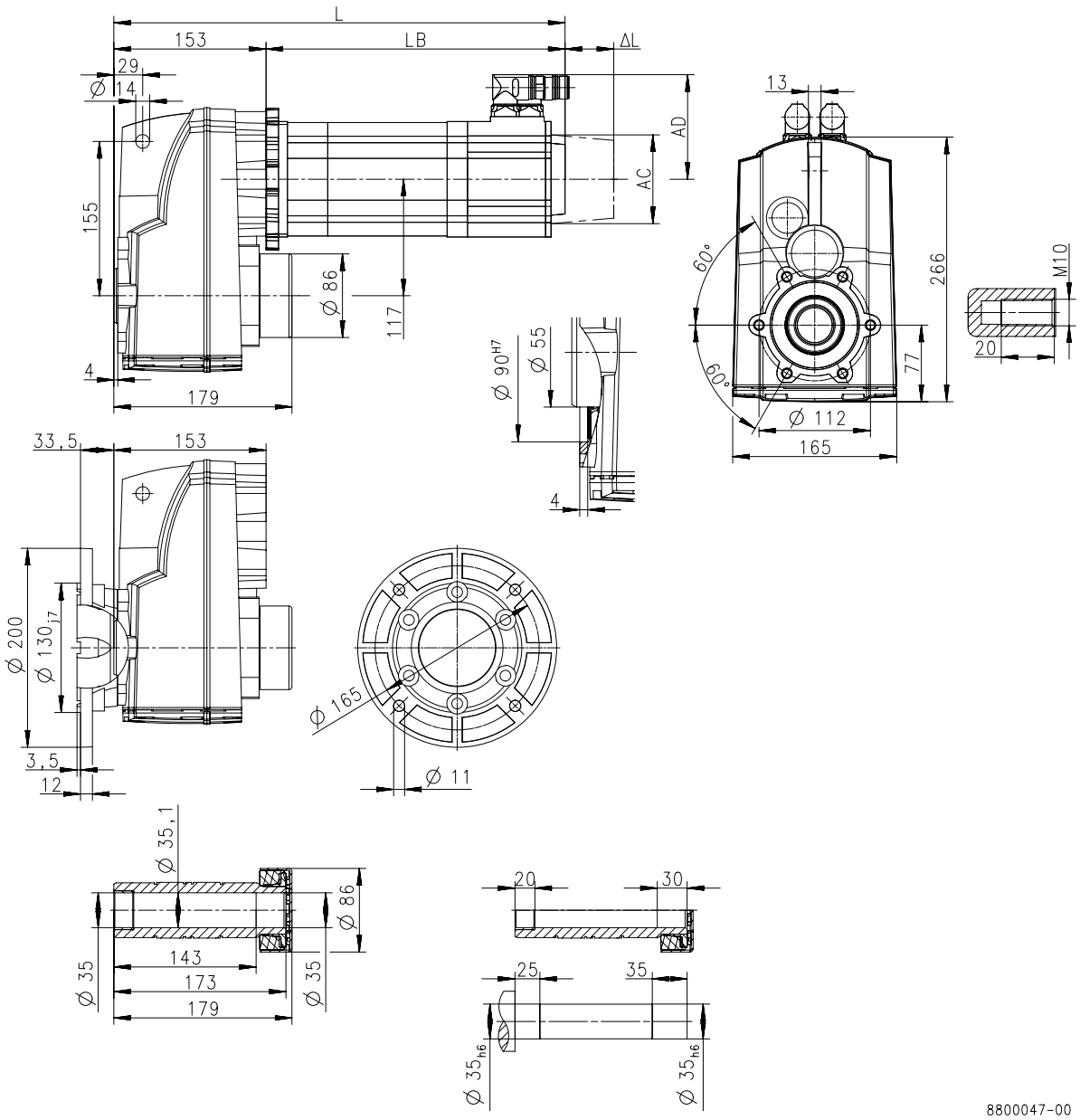

Product			MCS									
			12H15	12H30	12H35	12L20	14D15	14H15	14H32	14L15	14L32	14P14
Dimensions												
Total length	**L**	**[mm]**	394			434	369	409		449		489
Motor length	**LB**	**[mm]**	240.5			280.5	216	256		296		336
Length of motor options	**Δ L**	**[mm]**	69				78					
Motor diameter	**AC**	**[mm]**	116				143					
Distance motor/connection	**AD**	**[mm]**	105				116.5				146	116.5



Dimensions, self-ventilated motors

g500-S660

Dimensions with hollow shaft

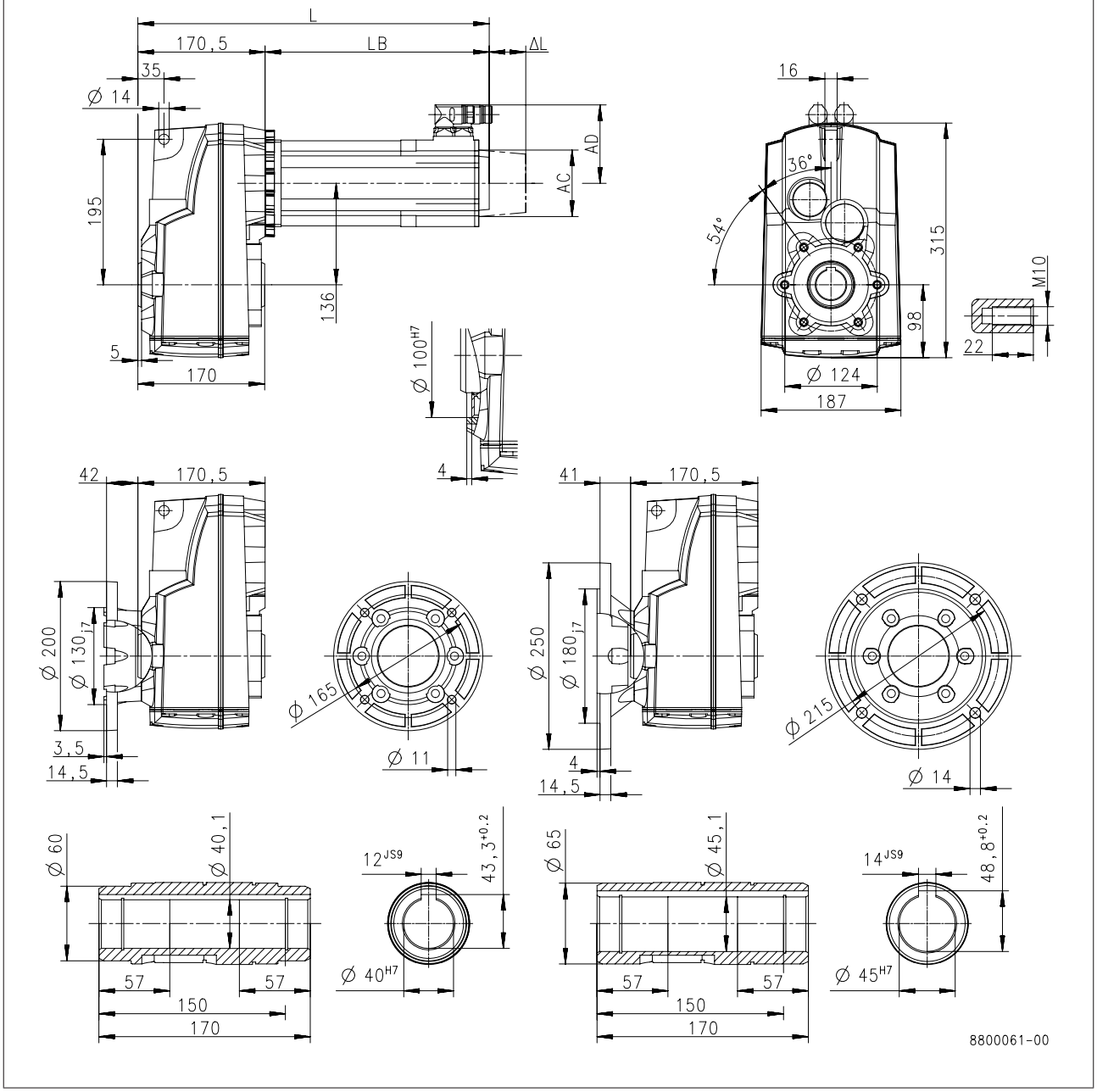

Product			MCS									
			06C41	06F41	06I41	09D41	09F38	09H41	09L41	12D20	12D41	12H15
Dimensions												
Total length	**L**	**[mm]**	302	332	362	354	374	394	434	371		411
Motor length	**LB**	**[mm]**	131.4	161.4	191.4	183.9	203.9	223.9	263.9	200.5		240.5
Length of motor options	**Δ L**	**[mm]**	100			71				69		
Motor diameter	**AC**	**[mm]**	86			89				116		
Distance motor/connection	**AD**	**[mm]**	77			89.7				105		



Dimensions, self-ventilated motors

g500-S660

Dimensions with hollow shaft

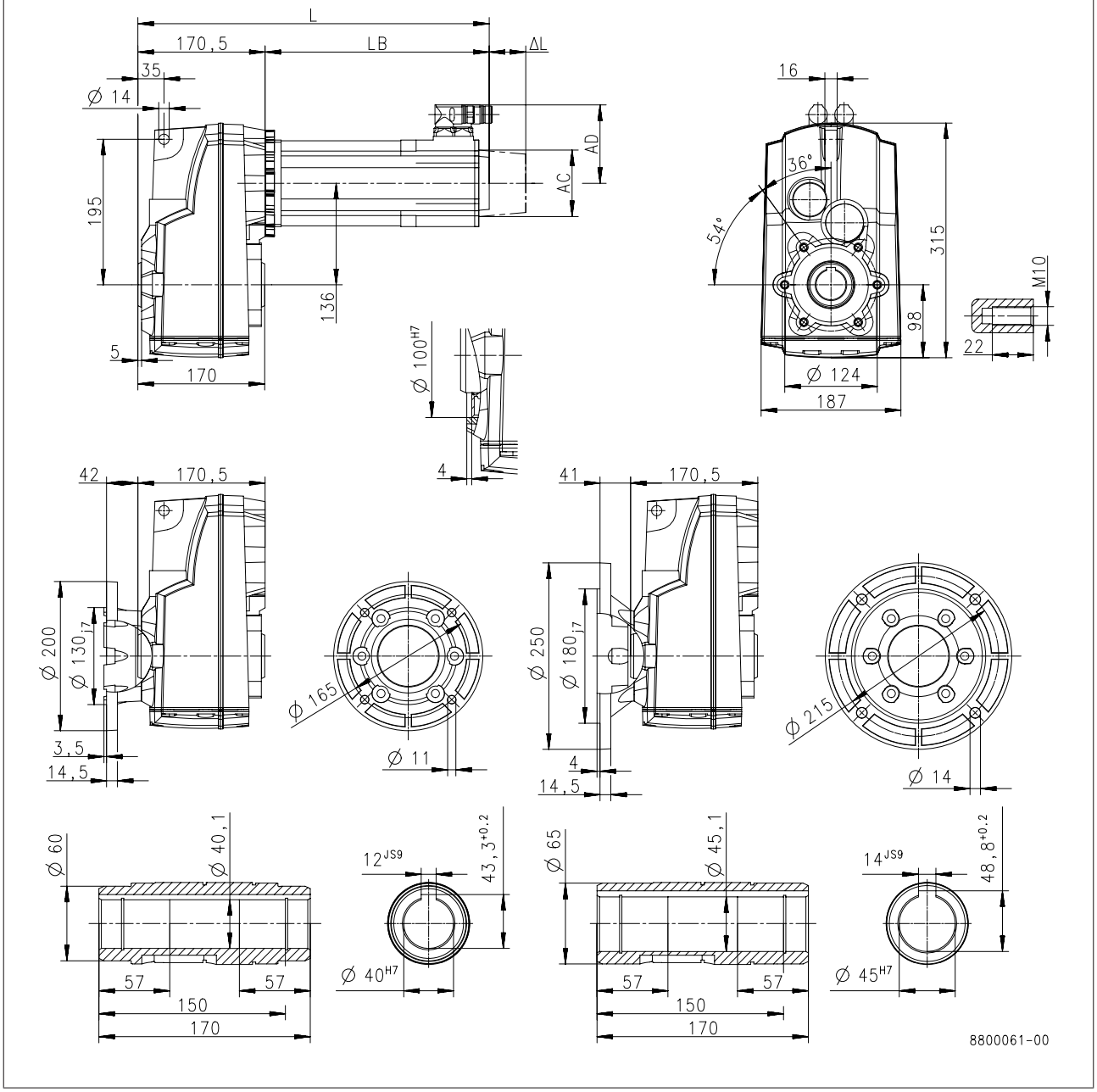

Product			MCS										
			12H30	12H35	12L20	12L41	14D15	14H15	14H32	14L15	14L32	14P14	14P32
Dimensions													
Total length	**L**	**[mm]**	411		451		387	427		467		507	
Motor length	**LB**	**[mm]**	240.5		280.5		216	256		296		336	
Length of motor options	**Δ L**	**[mm]**	69				78						
Motor diameter	**AC**	**[mm]**	116				143						
Distance motor/connection	**AD**	**[mm]**	105				116.5				146	116.5	146



Dimensions, self-ventilated motors

g500-S660

Dimensions with solid shaft

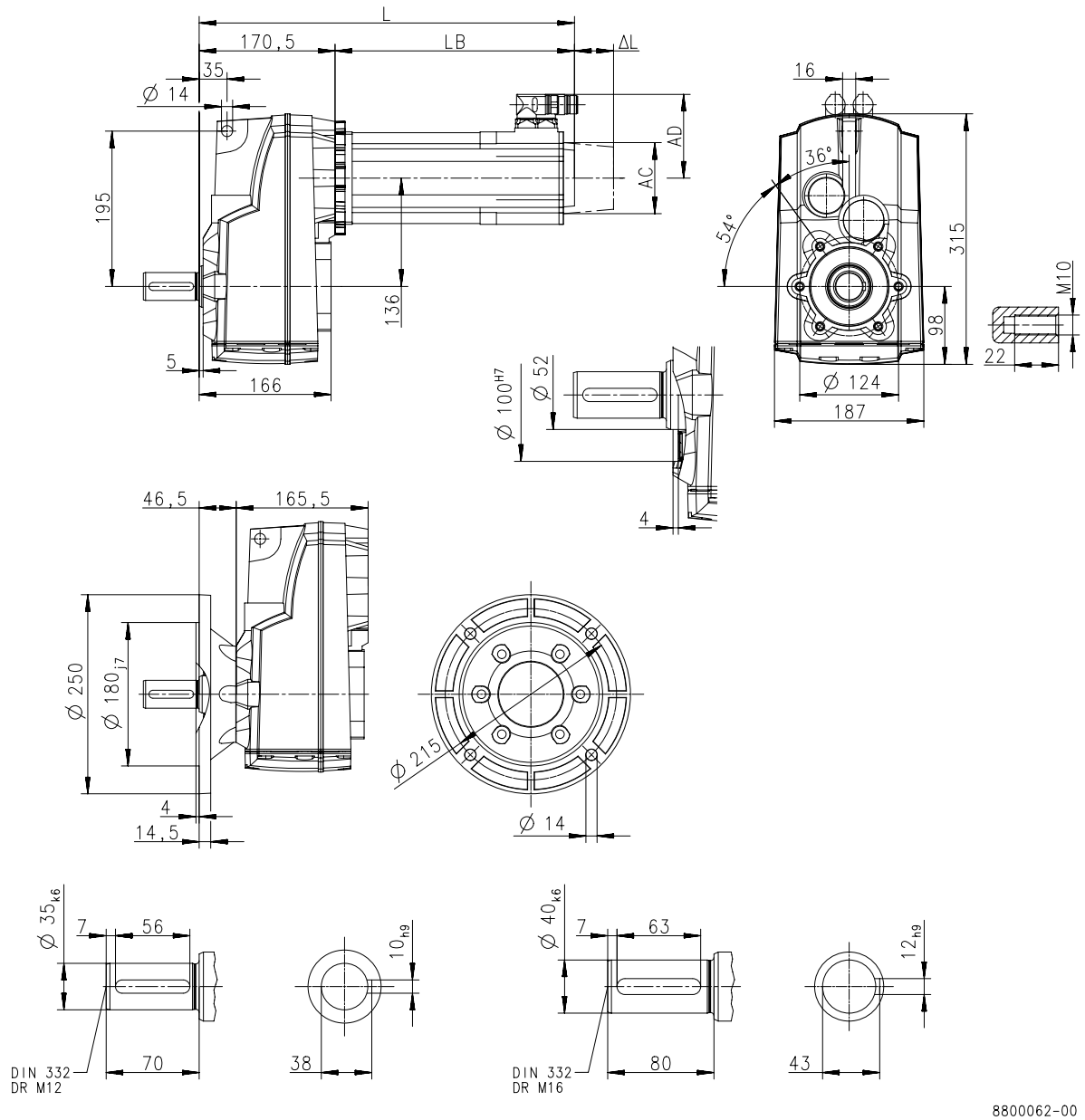

Product			MCS									
			06C41	06F41	06I41	09D41	09F38	09H41	09L41	12D20	12D41	12H15
Dimensions												
Total length	**L**	**[mm]**	302	332	362	354	374	394	434	371		411
Motor length	**LB**	**[mm]**	131.4	161.4	191.4	183.9	203.9	223.9	263.9	200.5		240.5
Length of motor options	**Δ L**	**[mm]**	100			71				69		
Motor diameter	**AC**	**[mm]**	86			89				116		
Distance motor/connection	**AD**	**[mm]**	77			89.7				105		



Dimensions, self-ventilated motors

g500-S660

Dimensions with solid shaft

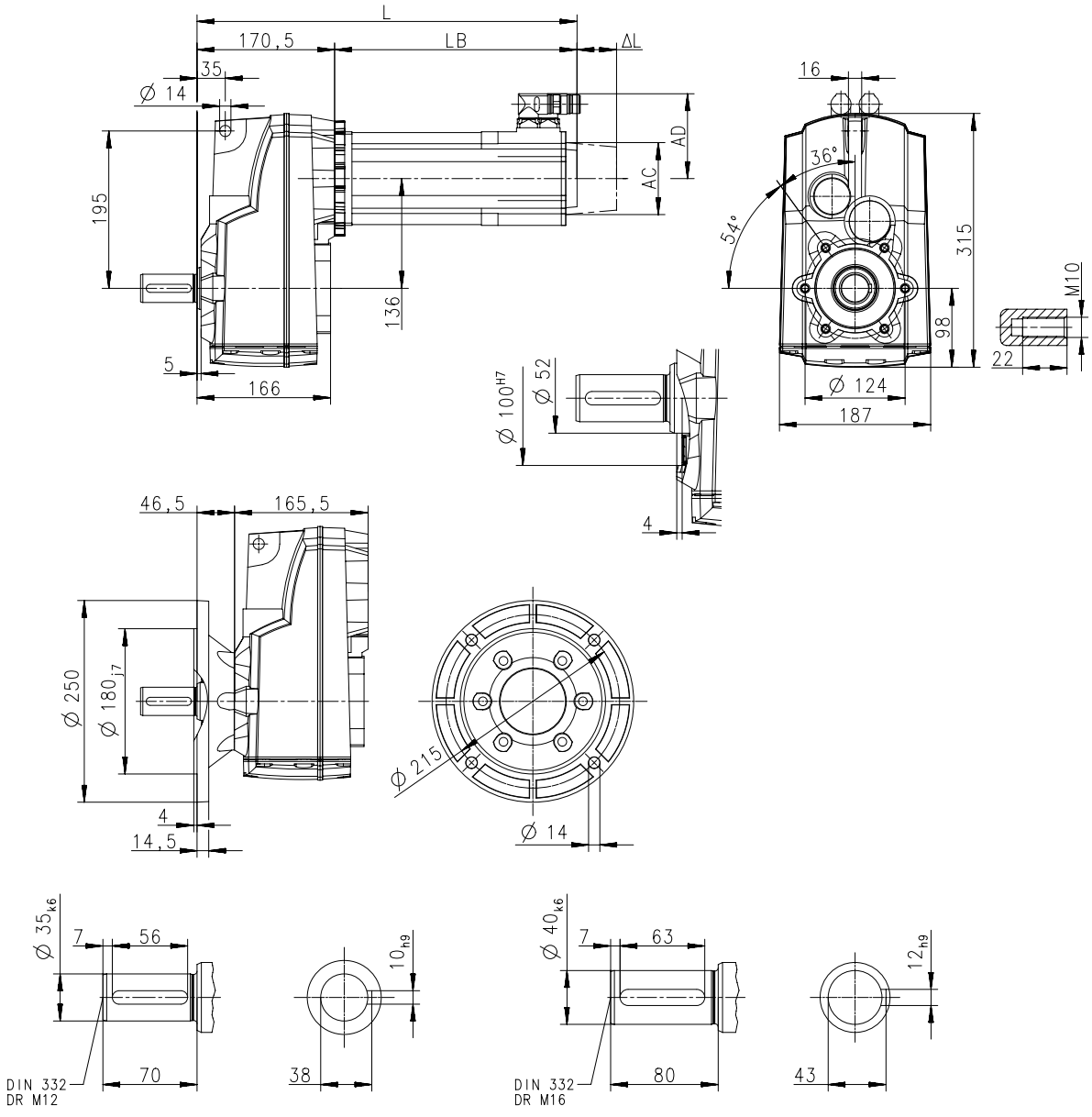

Product			MCS										
			12H30	12H35	12L20	12L41	14D15	14H15	14H32	14L15	14L32	14P14	14P32
Dimensions													
Total length	**L**	**[mm]**	411		451		387	427		467		507	
Motor length	**LB**	**[mm]**	240.5		280.5		216	256		296		336	
Length of motor options	**Δ L**	**[mm]**	69				78						
Motor diameter	**AC**	**[mm]**	116				143						
Distance motor/connection	**AD**	**[mm]**	105				116.5				146	116.5	146



Dimensions, self-ventilated motors

g500-S660

Dimensions with solid shaft and foot

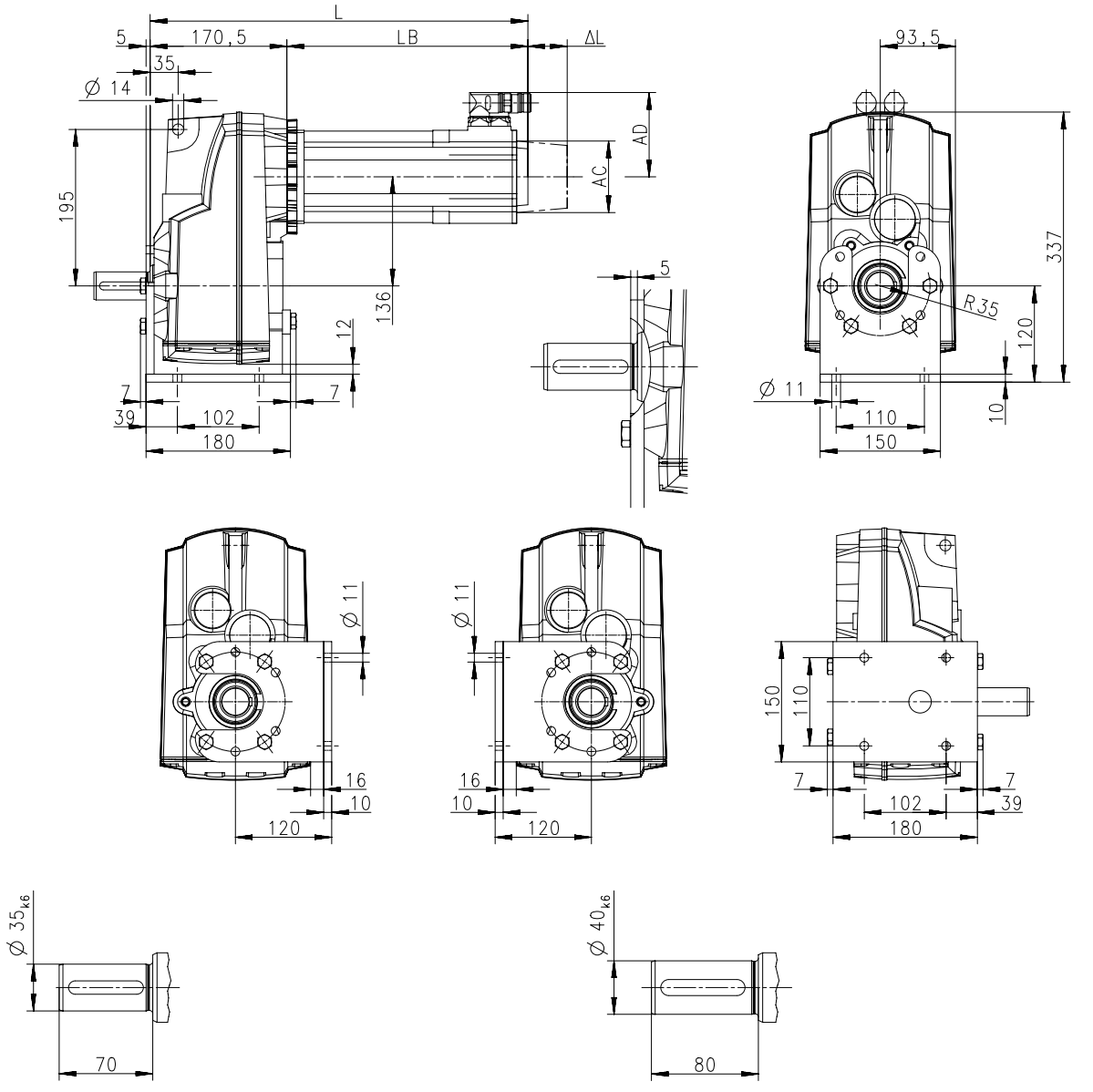

Product			MCS									
			06C41	06F41	06I41	09D41	09F38	09H41	09L41	12D20	12D41	12H15
Dimensions												
Total length	**L**	**[mm]**	302	332	362	354	374	394	434	371		411
Motor length	**LB**	**[mm]**	131.4	161.4	191.4	183.9	203.9	223.9	263.9	200.5		240.5
Length of motor options	**Δ L**	**[mm]**	100			71				69		
Motor diameter	**AC**	**[mm]**	86			89				116		
Distance motor/connection	**AD**	**[mm]**	77			89.7				105		



Dimensions, self-ventilated motors

g500-S660

Dimensions with solid shaft and foot

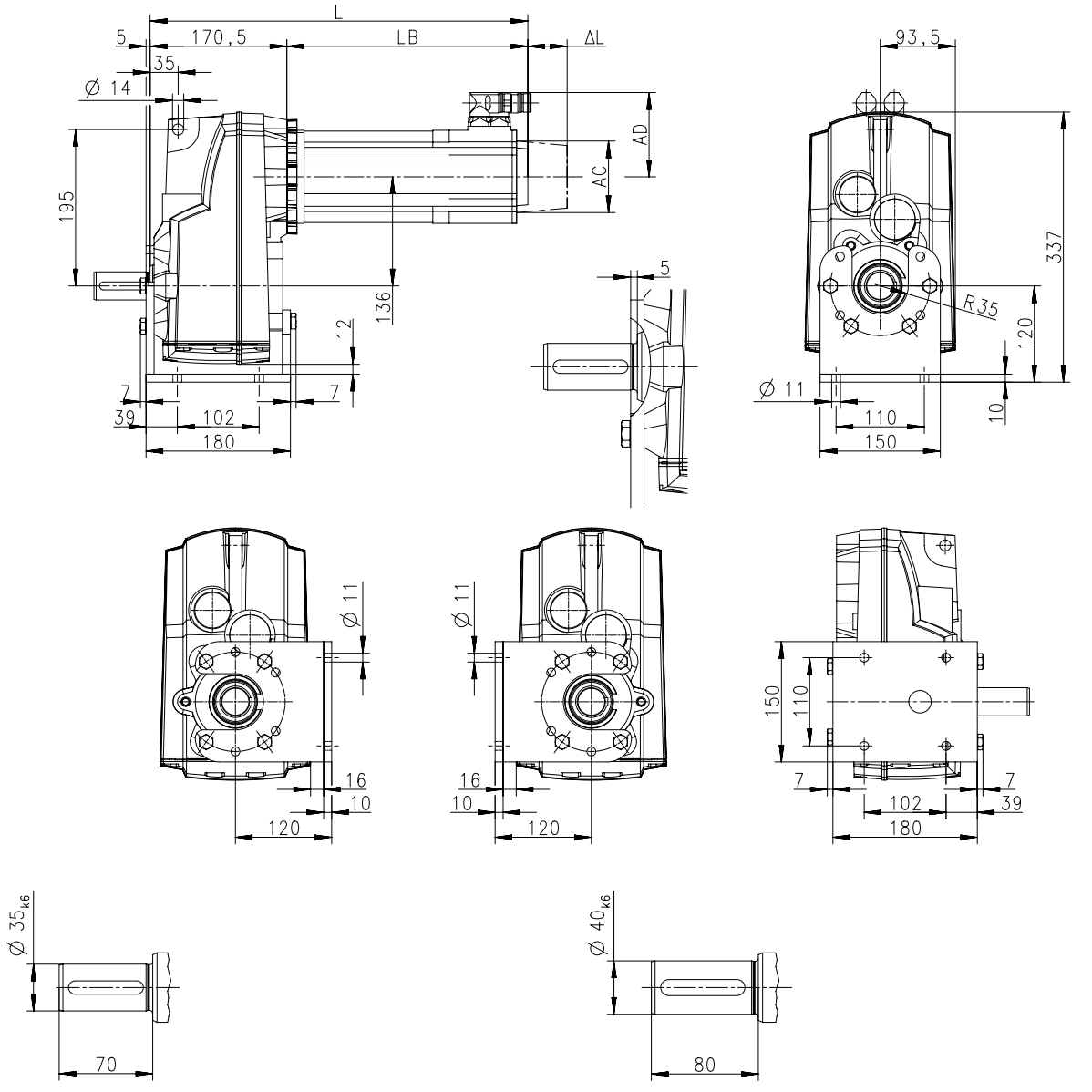

Product			MCS										
			12H30	12H35	12L20	12L41	14D15	14H15	14H32	14L15	14L32	14P14	14P32
Dimensions													
Total length	**L**	**[mm]**	411		451		387	427		467		507	
Motor length	**LB**	**[mm]**	240.5		280.5		216	256		296		336	
Length of motor options	**Δ L**	**[mm]**	69				78						
Motor diameter	**AC**	**[mm]**	116				143						
Distance motor/connection	**AD**	**[mm]**	105				116.5				146	116.5	146



Dimensions, self-ventilated motors

g500-S660

Dimensions with shrink disc

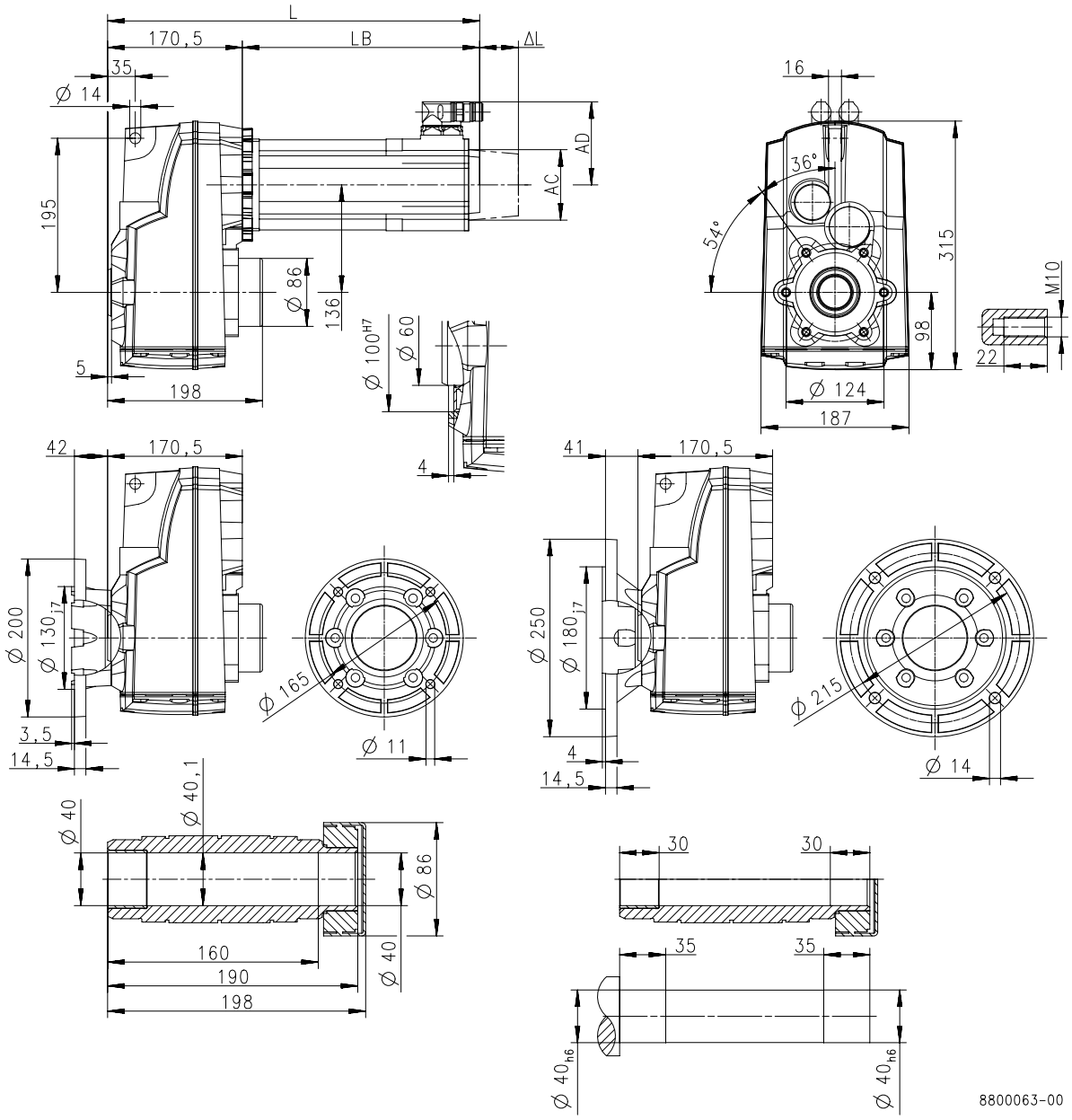

Product			MCS									
			06C41	06F41	06I41	09D41	09F38	09H41	09L41	12D20	12D41	12H15
Dimensions												
Total length	**L**	**[mm]**	302	332	362	354	374	394	434	371		411
Motor length	**LB**	**[mm]**	131.4	161.4	191.4	183.9	203.9	223.9	263.9	200.5		240.5
Length of motor options	**Δ L**	**[mm]**	100			71				69		
Motor diameter	**AC**	**[mm]**	86			89				116		
Distance motor/connection	**AD**	**[mm]**	77			89.7				105		



Dimensions, self-ventilated motors

g500-S660

Dimensions with shrink disc

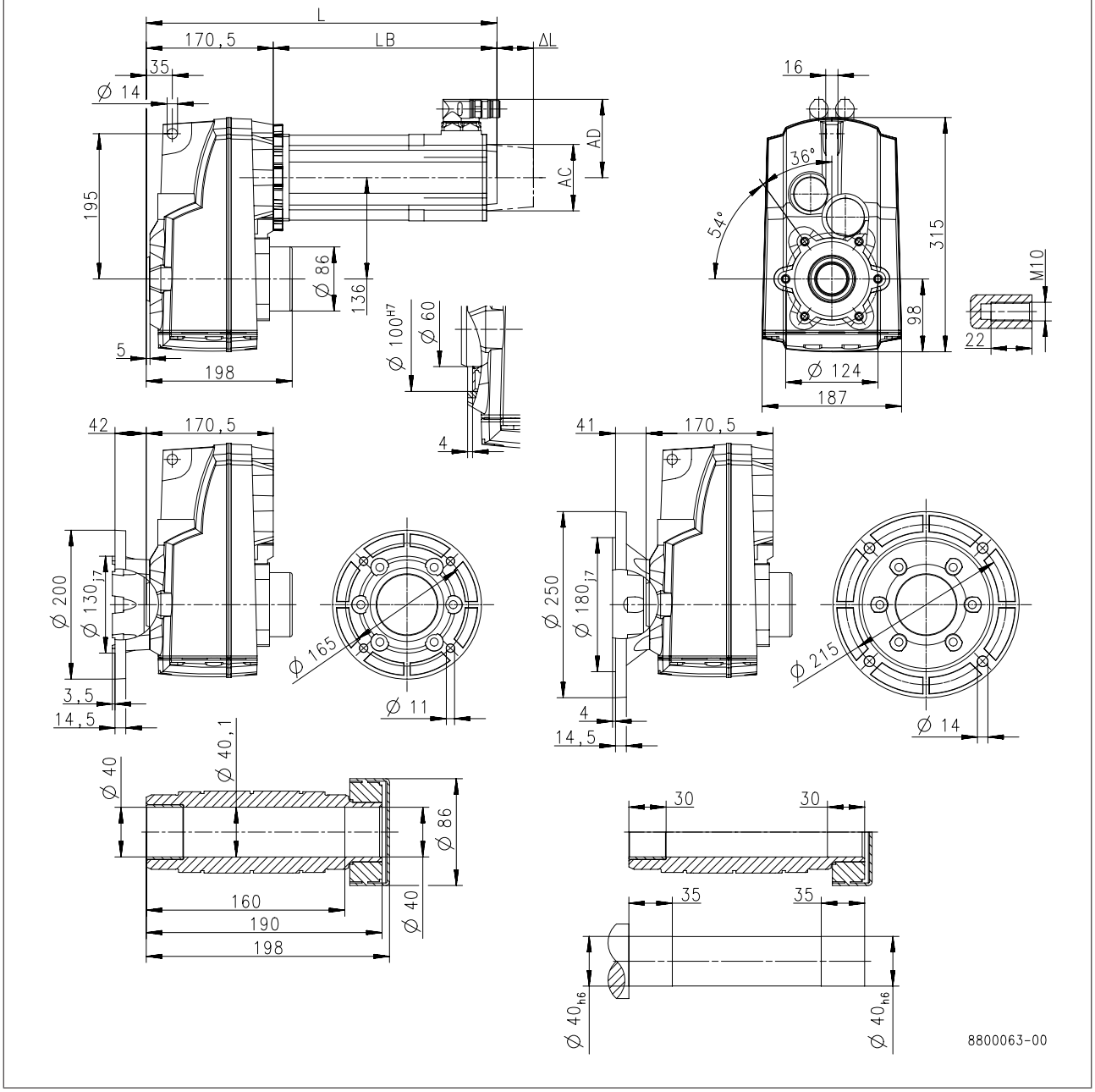

Product			MCS										
			12H30	12H35	12L20	12L41	14D15	14H15	14H32	14L15	14L32	14P14	14P32
Dimensions													
Total length	**L**	**[mm]**	411		451		387	427		467		507	
Motor length	**LB**	**[mm]**	240.5		280.5		216	256		296		336	
Length of motor options	**Δ L**	**[mm]**	69				78						
Motor diameter	**AC**	**[mm]**	116				143						
Distance motor/connection	**AD**	**[mm]**	105				116.5				146	116.5	146



Weights, self-ventilated motors

2-stage gearboxes

				MCS							
				06C41	06F41	06I41	09D41	09F38	09H41	09L41	12D20 12D41
g500	-S130	m	[kg]	7.2	7.6	8.3	9.6	10	11	13	
	-S220	m	[kg]		9.0	9.7	11	12	13	15	13
	-S400	m	[kg]		12	13	14	15	16	18	16
	-S660	m	[kg]			17	18	19	20	22	21

				MCS							
				12H15 12H30 12H35	12L20	12L41	14D15	14H15 14H32	14L15 14L32	14P14	14P32
g500	-S220	m	[kg]	16	20						
	-S400	m	[kg]	20	23		21	26	30	35	
	-S660	m	[kg]	24	27		25	30	35	39	

3-stage gearboxes

				MCS						
				06C41	06F41	06I41	09D41	09F38	09H41	09L41
g500	-S220	m	[kg]	8.8	9.2	9.9	11	12		
	-S400	m	[kg]	12		13	14	15	16	18
	-S660	m	[kg]	16	17	18	19	20	21	22



Surface and corrosion protection

For optimum protection of geared motors against ambient conditions, the surface and corrosion protection system (OKS) offers tailor-made solutions.

Various surface coatings combined with other protective measures ensure that the geared motors operate reliably even at high air humidity, in outdoor installations or in the presence of atmospheric impurities. Any colour from the RAL Classic collection can be chosen for the top coat. The geared motors are also available unpainted (no surface and corrosion protection).

Surface and corrosion protection	Applications	Measures
OKS-G (primed)	• Dependent on subsequent top coat applied	• 2K PUR priming coat (grey) • Zinc-coated screws • Rust-free breather elements Optional measures • Stainless steel nameplate
OKS-S (small)	• Standard applications • Internal installation in heated buildings • Air humidity up to 90%	• Surface coating as per corrosivity category C1 (in line with EN 12944-2) • Zinc-coated screws • Rust-free breather elements Optional measures • Stainless steel nameplate
OKS-M (medium)	• Internal installation in non-heated buildings • Covered, protected external installation • Air humidity up to 95%	• Surface coating as per corrosivity category C2 (in line with EN 12944-2) • Zinc-coated screws • Rust-free breather elements Optional measures • Stainless steel shaft • Stainless steel nameplate • Rust-free shrink disc (on request)
OKS-L (large)	• External installation • Air humidity above 95% • Chemical industry plants • Food industry	• Surface coating as per corrosivity category C3 (in line with EN 12944-2) • Blower cover and B end shield additionally primed • Cable glands with gaskets • Corrosion-resistant brake with cover ring, stainless friction plate, and chrome-plated armature plate (on request) • All screws/screw plugs zinc-coated • Stainless breather elements • Threaded holes that are not used are closed by means of plastic plugs Optional measures • Sealed recesses on motor (on request) • Stainless steel shaft • Stainless steel nameplate • Rust-free shrink disc (on request) • Additional priming coat on cast iron fan • Oil expansion tank and torque plates painted separately and supplied loose



Surface and corrosion protection

Structure of surface coating

Surface and corrosion protection	Corrosivity category	Surface coating	Colour
	DIN EN ISO 12944-2	Structure	
Without OKS(uncoated)		Dipping primed gearbox	
OKS-G (primed)		Dipping primed gearbox 2K PUR priming coat	
OKS-S (small)	C1	Dipping primed gearbox 2K-PUR top coat	Standard: RAL 7012 Optional: RAL Classic
OKS-M (medium)	C2	Dipping primed gearbox 2K PUR priming coat 2K-PUR top coat	
OKS-L (large)	C3		





g500-S shaft-mounted helical gearbox

130 to 660 Nm

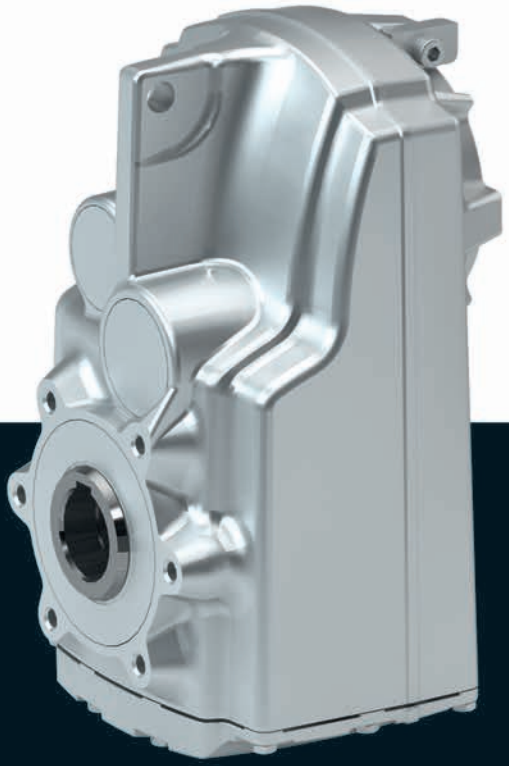

g500-S shaft-mounted helical gearbox

Contents



General information	List of abbreviations	6.5 - 5
	Product information	6.5 - 6
	Equipment	6.5 - 7
	The gearbox kit	6.5 - 8
	Functions and features	6.5 - 10
	Lubricants	6.5 - 11
	Ventilation	6.5 - 12
Technical data	Permissible radial and axial forces at output	6.5 - 15
	Moments of inertia	6.5 - 17
	Additional weights for gearboxes	6.5 - 19
Accessories	Torque plate	6.5 - 21
	Shaft cover	6.5 - 22





List of abbreviations

$F_{ax,max}$	[N]	Max. axial force
$F_{rad,max}$	[N]	Max. radial force
i		Ratio
J	[kgcm²]	Moment of inertia
m	[kg]	Mass

g500-S shaft-mounted helical gearbox

General information



Product information

The slim shaft-mounted helical gearboxes feature high reliable radial forces, closely stepped gear reductions and a low backlash. They are available in 2-pole and 3-pole design with a torque up to 660 Nm and a ratio of up to i= 495.

Versions

- Slimline design saves installation space of the machine
- Solid shaft, hollow shaft and shrink disc for direct integration into the machine
- High accuracy with axial output provide for the highest efficiency

The product name

Gearbox type	Product range		Design	Rated torque [Nm]	Product
Shaft-mounted helical gearbox	g500	-	S	130	g500-S130
				220	g500-S220
				400	g500-S400
				660	g500-S660



Equipment

Overview

The equipment includes all the options available as standard and all the built-on accessories of the product.

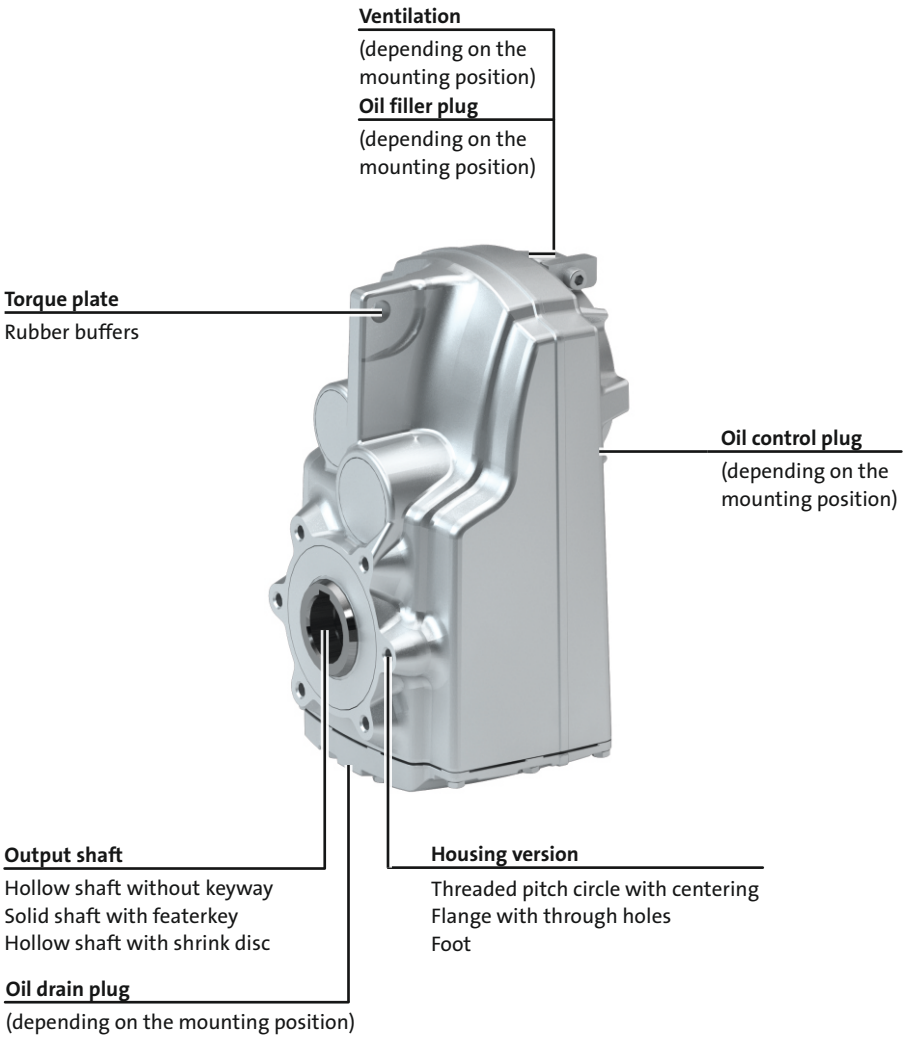



The gearbox kit

Gearbox details

Product	g500-S130	g500-S220	g500-S400	g500-S660
Driven shaft				
Solid shaft with featherkey [mm]	25x50		30x60	35x70 40x80
Hollow shaft with keyway [mm]	25	25/30	30/35	40/45
Hollow shaft with shrink disc [mm]	25	25/30	35	40
Design	Standard stainless steel			
Gasket	Standard FPM (Viton)			
Bearing	Standard			
Fitting grease	Not enclosed Enclosed			
Housing				
Housing version	With foot without centring With centering			
Output flange				
flange diameter [mm]	160		200	200/250 [1]
Lubricant				
Type	CLP 460 [2] CLP HC 320 CLP HC 220 CLP HC 220 USDA H1			
Oil-level inspection	Without inspection With inspection			
Breather element	Without		Standard mounting position: Mounted Combined mounting position: loosely enclosed	
Backlash				
Backlash	Standard			
Accessories				
Torque plate	Rubber buffers			
Shaft cover	Shrink disc: Rotating cover Shrink disc: Fixed cover			

[1] 200 mm flange diameter only possible on hollow shaft version.
[2] Not suitable for geared servo motors.

6.5

► Further information and installation feasibilities can be found in the Gearboxes chapter.



The gearbox kit

Gearbox details

Solid shaft

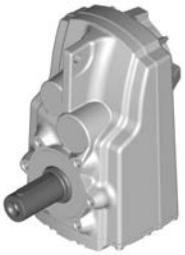

without centring

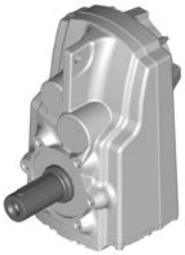

With centering



Flange with through holes

Hollow shaft



without centring



With centering



Flange with through holes

Hollow shaft with shrink disc



without centring



With centering



Flange with through holes

Accessories



Foot mounting



With rubber buffer

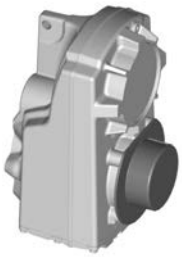

Shrink disc cover

6.5



Functions and features

Product	g500-S130	g500-S220	g500-S400	g500-S660
Housing				
Design	Cuboid			
Material	Aluminium			
Solid shaft				
Design	with keyway to DIN 6885			
Tolerance	Shaft diameter ≤ 50 mm: k6 Shaft diameter > 50 mm: m6			
Material	Tempered steel C45 Nirosta X46Cr13			
Hollow shaft				
Design	With keyway Without keyway (for shrink disc)			
Tolerance	Bore H7			
Material	Tempered steel C45 Nirosta X46Cr13			
Toothed parts				
Design	Ground tooth flanks Optimised tooth flank geometry			
Material	Case-hardened steel			
Shaft-hub joint				
	1st and 2nd step: Force-fit 3rd step: positive-fit			
Shaft sealing rings				
Design	With dust lip			
Material	NB / FP			
Bearing				
Design	Ball bearing / tapered-roller bearing depending on size and design			
Lubricants				
	Standard: mineral oil Optional: synthetic oil [1]			
Quantities	Corresponding to mounting position (see nameplate)			
Mechanical efficiency				
2-stage gearboxes [$\eta_{c=1}$]	0.96			
3-stage gearboxes [$\eta_{c=1}$]		0.95		

[1] Standard for geared servo motors.

Direction of rotation

6.5

2-stage gearboxes	3-stage gearboxes
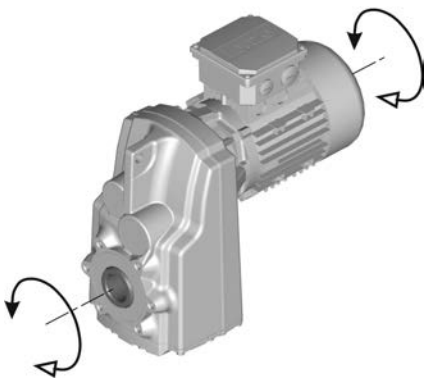	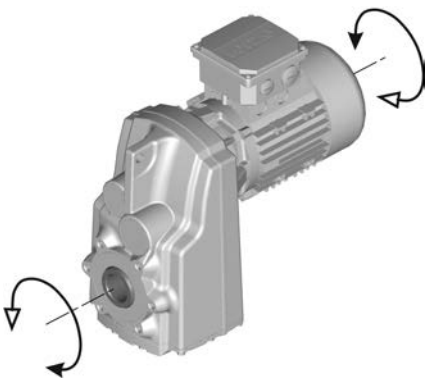



Lubricants

Lenze gearboxes and geared motors are ready for operation on delivery and are filled with lubricants specific to both the drive and the design. The mounting position and design specified in the order are key factors in choosing the volume of lubricant.

The lubricants listed in the lubricant table are approved for use in Lenze drives.

Lubricant table

Mode	CLP 460	CLP HC 320	CLP HC 220 USDA H1
Ambient temperature [°C]	0 ... +40	-25 ... +50	-20 ... +40
Specification	Mineral based oil with additives	Synthetic-based oil (synthetic hydrocarbon / poly-alpha-olefin oil)	
Changing interval	16000 operating hours not later than after three years (oil temperature 70 to 80 °C)	25000 operating hours not later than after three years (oil temperature 70 to 80 °C)	16000 operating hours not later than after three years (oil temperature 70 to 80 °C)
Fuchs	Fuchs Renolin CLP 460	Fuchs Renolin Unisyn CLP 320	bremer & leguil Cassida Fluid GL 220
Klüber	Klüberoil GEM1-460 N	Klübersynth GEM4-320 N	Klüberoil 4 UH1-220 N
Shell	Shell Omala S2 G 460	Shell Omala S4 GX HD 320	

► Please contact your Lenze sales office if you are operating at ambient temperatures in areas up to< -20 °C bzw. > or up to +40°C.

Shaft sealing rings

By default, the gearboxes come with NBR shaft sealing rings at the output end. At high speed and unfavourable ambient conditions as high temperature, reduced circulation of air etc., Lenze recommends the use of Viton shaft sealing rings.

Please consider this in your order.



Ventilation

Non-ventilated gearboxes

No ventilation is required for gearboxes g500-S130 to S220.

Ventilated gearboxes

The g500-S400 S660 gearbox is supplied with a breather element as standard.

Gearboxes in combined mounting position

To reduce the number of different versions, the gearboxes can also be ordered with combined mounting positions.
Depending on the gearbox in question, the following combinations are available:
g500-S130 to S660 in combined mounting position AEF
The breather elements are supplied loose.



Ventilation

Position of ventilation, sealing elements and oil level check

► **A ... F** mounting position

A	B
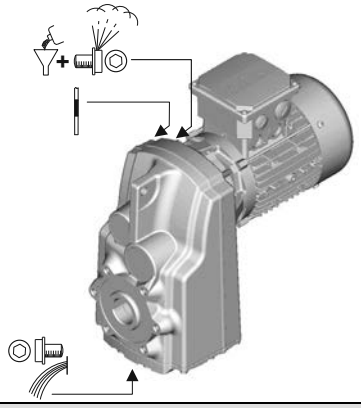	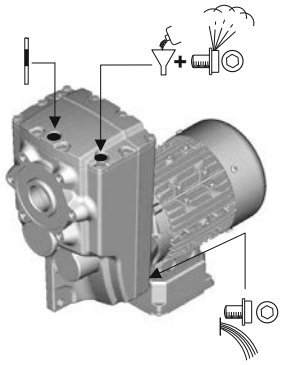
C	**D**
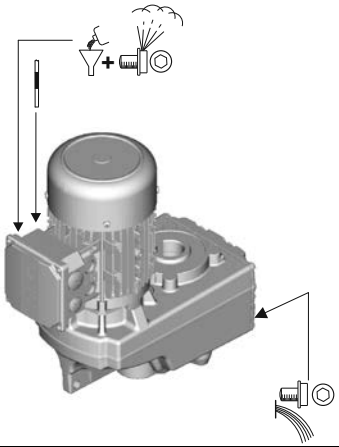	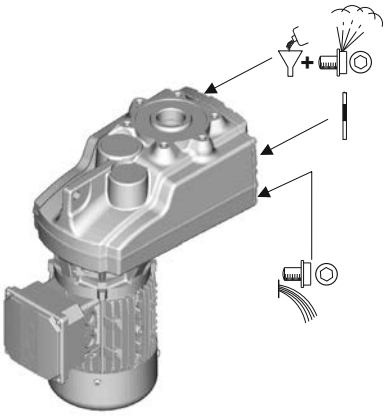
E	**F**
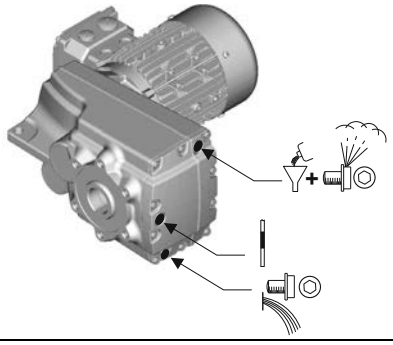	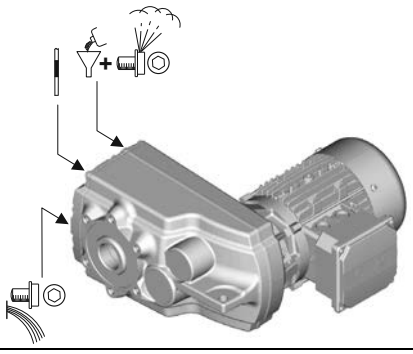

	Filling		Drain
	Ventilation		Check





Permissible radial and axial forces at output

Permissible radial force

$F_{rad,perm} = f_w \times F_{rad,max}$

► If F_{rad} **and** $F_{ax} \neq 0$, please contact Lenze.

Permissible axial force

If there is no radial force, the maximum permissible axial force is 50 % of the table value $F_{rad,max}$

Application of forces

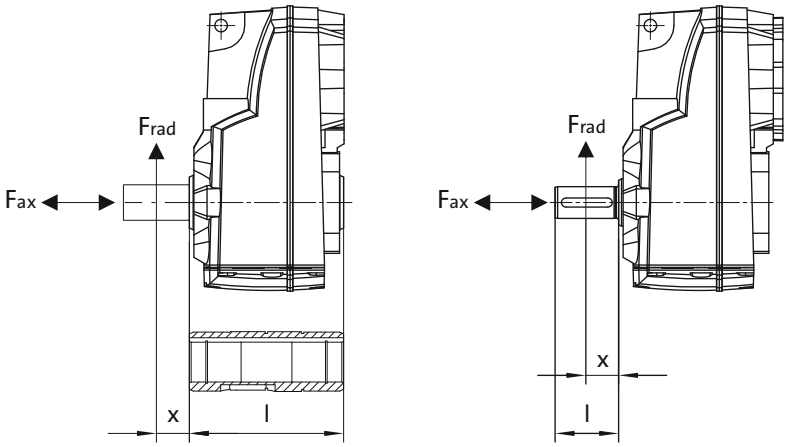

Additional load factor f_w at output shaft

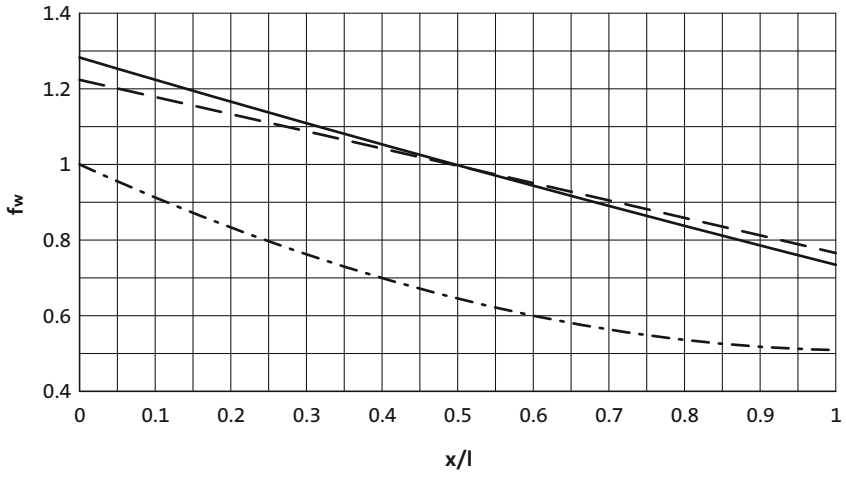

——— Solid shaft
— — — Solid shaft with flange
— · — Hollow shaft



Permissible radial and axial forces at output

The values given in the table refer to the center shaft end force application point and are minimum values calculated according to the most unfavourable conditions (force application angle, mounting position, direction of rotation). The values were calculated for the motor/gearbox combination with a load capacity of c= 1.3 and an input speed of 1400 rpm.

- ► If the torque is transmitted via the flange face, max 50 % of the radial force $F_{rad,max}$ are permissible.
- ► Neither radial nor axial forces are permissible for the hollow shaft with shrink disc.

In case of different operating conditions, considerably higher forces can be transmitted. Please contact Lenze.

Product	n_2 [r/min]									
	1000	630	400	250	160	100	63	40	25	≤16

	Max. radial force, Hollow shaft									
	$F_{rad,max}$	$F_{rad,max}$	$F_{rad,max}$	$F_{rad,max}$	$F_{rad,max}$	$F_{rad,max}$	$F_{rad,max}$	$F_{rad,max}$	$F_{rad,max}$	$F_{rad,max}$
	[N]	[N]	[N]	[N]	[N]	[N]	[N]	[N]	[N]	[N]
g500-S130	1000	1150	1350	1500	1650	2200	2750	3450	4200	4500
g500-S220	2100	2700	2800	3200	3800	4600	5500	6300	7000	7000
g500-S400	1800	2400	3000	3400	4100	5000	6000	7100	8000	8000
g500-S660	2400	3300	4300	4700	5000	6600	8500	10800	12000	12000

	Max. radial force, Solid shaft without flange									
	$F_{rad,max}$	$F_{rad,max}$	$F_{rad,max}$	$F_{rad,max}$	$F_{rad,max}$	$F_{rad,max}$	$F_{rad,max}$	$F_{rad,max}$	$F_{rad,max}$	$F_{rad,max}$
	[N]	[N]	[N]	[N]	[N]	[N]	[N]	[N]	[N]	[N]
g500-S130	1000	1150	1350	1500	1650	2200	2750	3450	4200	4500
g500-S220	1650	2100	2300	2700	3200	3600	3600	3600	3600	3600
g500-S400	1400	1900	2400	2700	3200	4000	4800	5800	6200	6200
g500-S660	1850	2500	3200	3600	3900	5100	6500	8400	9000	9000

	Max. radial force, Solid shaft with flange									
	$F_{rad,max}$	$F_{rad,max}$	$F_{rad,max}$	$F_{rad,max}$	$F_{rad,max}$	$F_{rad,max}$	$F_{rad,max}$	$F_{rad,max}$	$F_{rad,max}$	$F_{rad,max}$
	[N]	[N]	[N]	[N]	[N]	[N]	[N]	[N]	[N]	[N]
g500-S130	1000	1150	1350	1500	1650	2200	2750	3450	4200	4500
g500-S220	2300	2800	3200	3700	4400	4600	4600	4600	4600	4600
g500-S400	2900	3700	4300	5100	5900	6800	7000	7000	7000	7000
g500-S660	4000	5000	6100	7000	7800	9600	10000	10000	10000	10000



Moments of inertia

- The moments of inertia relate to the drive shaft of the gearbox.
- The total moment of inertia is calculated by adding the values of the gearbox, motor and accessories.

2-stage gearboxes

Product	Ratio	Moment of inertia
	i	J
		[kgcm²]
g500-S130	3.661	1.56
	5.021	0.89
	6.425	0.57
	7.029	0.49
	8.322	0.69
	9.411	1.03
	11.413	0.42
	12.907	0.60
	14.606	0.29
	15.979	0.25
	18.069	0.34
	20.381	0.17
	23.048	0.23
	24.967	0.13
	28.233	0.17
	31.387	0.087
	35.493	0.11
	40.422	0.059
	45.711	0.074
	51.230	0.039
	57.933	0.048
	64.200	0.027
	72.600	0.032
	84.581	0.016
	95.648	0.019
g500-S220	3.840	2.60
	5.267	1.54
	6.767	1.64
	7.667	1.50
	9.280	1.04
	10.514	0.96
	11.876	0.72
	12.992	0.62
	13.456	0.67
	14.720	0.58
	16.571	0.44
	18.776	0.42
	20.300	0.34
	23.000	0.32
	26.422	0.21
	29.937	0.20
	32.867	0.15
	37.238	0.14
	42.533	0.095
	48.190	0.091
	51.620	0.069
	58.486	0.067
	65.975	0.044
	74.750	0.043

Product	Ratio	Moment of inertia
	i	J
		[kgcm²]
g500-S400	3.339	5.16
	4.579	2.91
	5.860	1.86
	6.411	1.58
	7.467	2.18
	8.436	1.95
	10.240	1.32
	11.569	1.20
	13.105	0.89
	14.336	0.77
	14.806	0.82
	16.197	0.70
	18.286	0.53
	20.659	0.49
	22.400	0.40
	25.308	0.37
	29.156	0.24
	32.940	0.23
	36.267	0.17
	40.974	0.16
	46.933	0.11
	53.026	0.10
	56.960	0.079
	64.354	0.074
g500-S660	3.920	8.80
	5.376	5.26
	6.417	5.48
	6.880	3.48
	7.311	4.90
	8.800	3.50
	10.027	3.19
	11.262	2.41
	12.320	2.12
	12.832	2.22
	14.037	1.96
	15.714	1.51
	17.905	1.42
	19.250	1.15
	21.933	1.09
	25.056	0.65
	28.548	0.61
	31.167	0.47
	35.511	0.44
	40.333	0.29
	45.956	0.28
	48.950	0.21
	55.773	0.20



Moments of inertia

3-stage gearboxes

Product	Ratio	Moment of inertia
	i	J
		[kgcm²]
g500-S220	40.012	0.20
	45.333	0.20
	52.587	0.13
	59.581	0.13
	67.298	0.092
	76.249	0.091
	86.079	0.062
	97.528	0.061
	111.747	0.044
	126.610	0.043
	143.205	0.030
	162.252	0.030
	241.022	0.014
	273.079	0.014
	312.233	0.003
	353.762	0.003
	398.508	0.006
	451.512	0.006
g500-S400	58.027	0.14
	65.559	0.14
	74.260	0.098
	83.900	0.095
	94.984	0.066
	107.314	0.064
	123.307	0.046
	139.313	0.045
	158.019	0.032
	178.531	0.031
	204.412	0.021
	230.946	0.021
	265.956	0.014
	300.479	0.014
	344.533	0.004
	389.256	0.004
	439.733	0.006
	496.814	0.006

Product	Ratio	Moment of inertia
	i	J
		[kgcm²]
g500-S660	49.867	0.39
	56.818	0.38
	63.817	0.27
	69.813	0.23
	72.713	0.26
	79.545	0.23
	89.048	0.17
	101.460	0.16
	109.083	0.13
	124.289	0.12
	137.133	0.083
	156.249	0.082
	176.611	0.056
	201.230	0.056
	223.833	0.037
	255.034	0.037
	280.500	0.026
	319.600	0.025
	369.548	0.016
	421.060	0.015



Additional weights for gearboxes

Product			g500-S130	g500-S220	g500-S400	g500-S660
Mass						
Solid shaft	m	[kg]	0.5	0.5	1.7	2.5
Shrink disc	m	[kg]	0.2	0.4	0.6	0.6
Foot	m	[kg]	1.7	1.8	3.3	4.3
Flange	m	[kg]	0.4	0.4	0.9	1.7





Torque plate

The torque is usually supported via the foot or the flange.
Another simple option is the integrated torque plate at the housing. Here, the torque is supported only via one point and is, among other things, suitable for shaft-mounted gearboxes. Moreover, the suitable rubber buffers provide for a low-tension installation and absorb slight shocks.

The rubber buffers can be ordered optionally.

Rubber buffer for torque plate

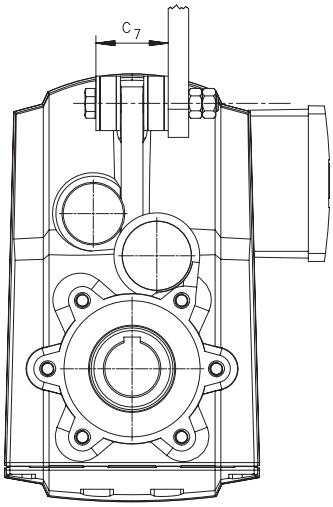

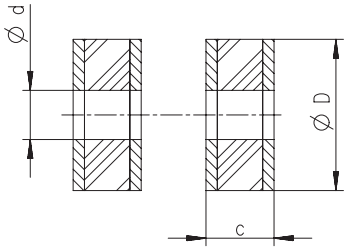

6.5

Product	Dimensions				Mass
	d	D	c	c_7	m
	[mm]	[mm]	[mm]	[mm]	[kg]
g500-S130	11.0	30.0	17.0	45.0	0.050
g500-S220	11.0	30.0	17.0	45.0	0.050
g500-S400	13.0	40.0	18.0	49.0	0.10
g500-S660	13.0	40.0	18.0	52.0	0.10



Shaft cover

Shrink disc cover

The cover is provided for the shrink disc to be protected from contact.

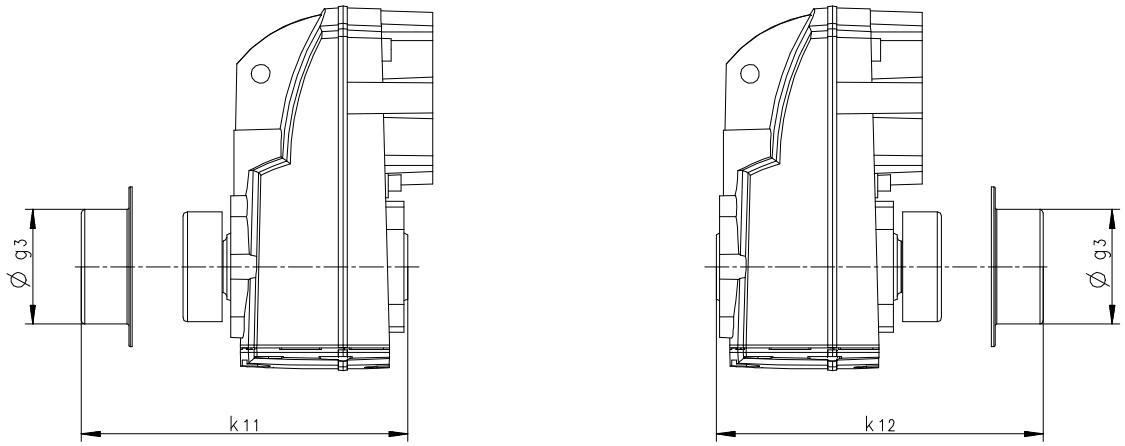

Product	Dimensions			Mass
	g_3	k_{11}	k_{12}	m
	[mm]	[mm]	[mm]	[kg]
g500-S130	63.0	132	132	0.050
g500-S220	76.0	152	152	0.050
g500-S400	90.0	182	182	0.050
g500-S660	90.0	200	202	0.050





g500-B bevel geared motors

6 ... 440 Nm (synchronous servo motors)

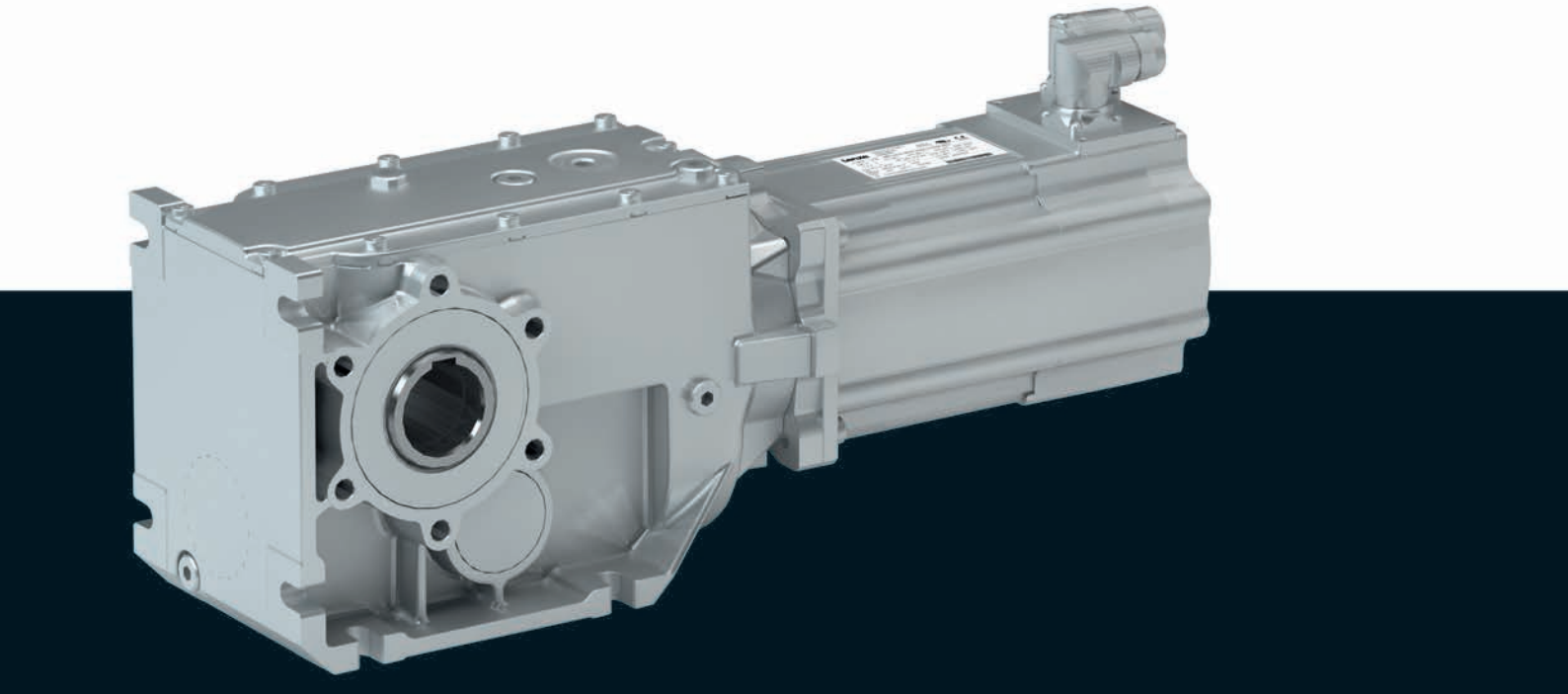

g500-B bevel geared motors

Contents



General information	List of abbreviations	6.7 - 5
	Product information	6.7 - 6
	Equipment	6.7 - 7
	The gearbox kit	6.7 - 8
	Dimensioning	6.7 - 14
Technical data	Selection tables, notes	6.7 - 19
	Selection tables	6.7 - 20
	Dimensions, notes	6.7 - 30
	Dimensions, self-ventilated motors	6.7 - 31
	Weights, self-ventilated motors	6.7 - 49
	Surface and corrosion protection	6.7 - 50

Contents

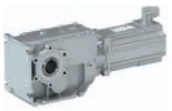



List of abbreviations

c		Load capacity
i		Ratio
J	[kgcm²]	Moment of inertia
m	[kg]	Mass
M_2	[Nm]	Output torque
$M_{2, max}$	[Nm]	Max. output torque
$n_{2, eto}$	[r/min]	Transition speed
$n_{2, th}$	[r/min]	Thermal limit speed

CCC	China Compulsory Certificate
CE	Communauté Européenne
CSA	Canadian Standards Association
cURus	Combined certification marks of UL for the USA and Canada
DIN	Deutsches Institut für Normung e.V.
EMC	Electromagnetic compatibility
EN	European standard
GOST	Certificate for Russian Federation
IEC	International Electrotechnical Commission
IM	International Mounting Code
IP	International Protection Code
NEMA	National Electrical Manufacturers Association
UL	Underwriters Laboratory Listed Product
UR	Underwriters Laboratory Recognized Product
VDE	Verband deutscher Elektrotechniker (Association of German Electrical Engineers)



Product information

In combination with servo motors, our bevel gearboxes form a compact and powerful drive unit. Numerous options at the input and output end provide for the drive to be exactly adapted to your application.

The efficient bevel gearboxes feature high reliable radial forces, closely stepped gear reductions and a low backlash. They are available in 2-pole and 3-pole design with a torque up to 450 Nm and a ratio of up to i= 360.

Versions

- High-efficient right-angle gearbox in a compact design for space-saving installation
- Standardised shaft and flange dimensions for an easy machine integration
- Low backlash and high torsional stiffness provide for exact results in positioning applications
- With MCS synchronous servo motors, rated torque: 0.5 Nm ... 72 Nm

The product name

Gearbox type	Product range		Design	Rated torque [Nm]	Product
Bevel gearbox	g500	-	B	45	g500-B45
				110	g500-B110
				240	g500-B240
				450	g500-B450



Equipment

Overview

The equipment includes all the options available as standard and all the built-on accessories of the product.

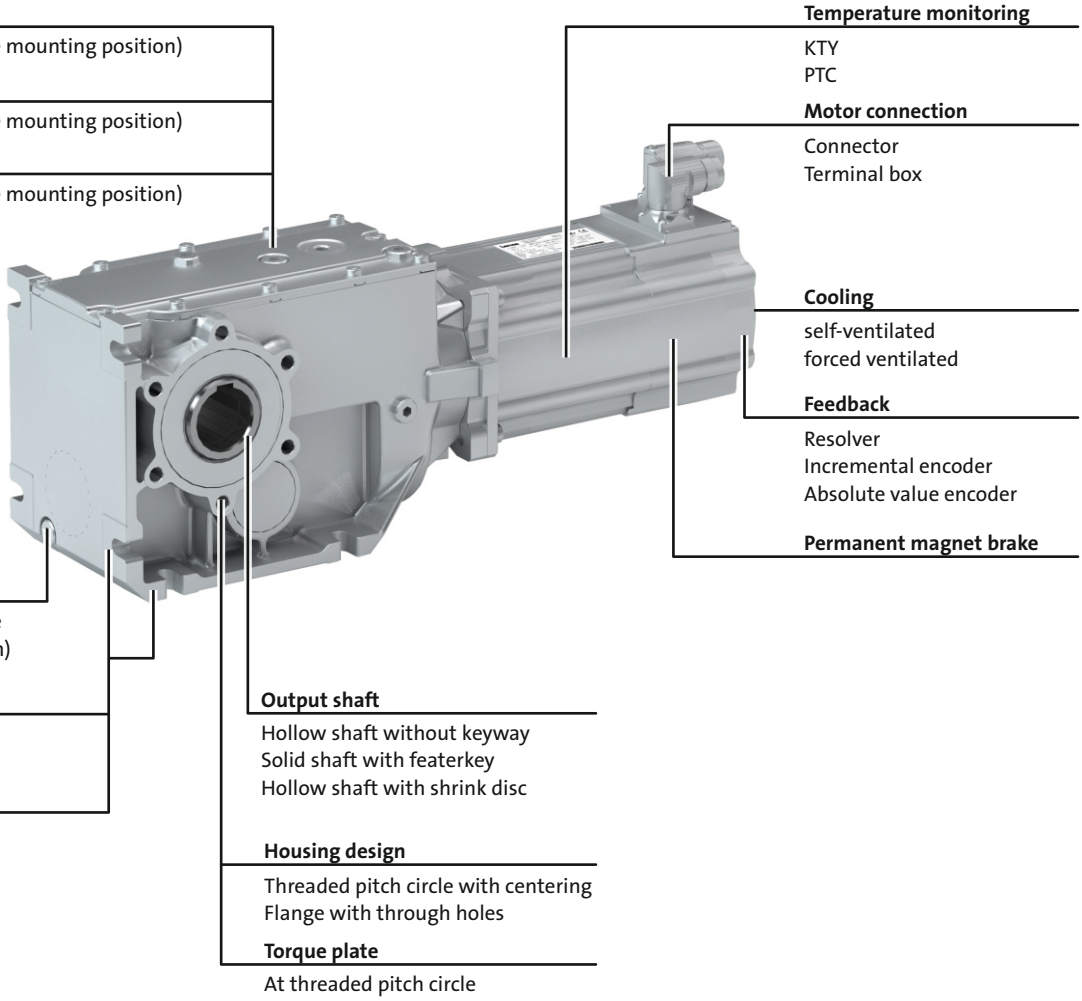



The gearbox kit

Geared motor

Product	g500-B45	g500-B110	g500-B240	g500-B450
Motor type	Synchronous servo motor			
Servo motor				
0.6 - 1.5 Nm	MCS06			
2.3 - 4.5 Nm		MCS09		
5.5 - 17 Nm			MCS12	
9.2 - 42 Nm				MCS14
Technical data				
Output torque	See selection table			
Output speed	See selection table			
Ratio	See selection table			
Load capacity	See selection table			
Moment of inertia	See selection table			
Mounting position				
Standard	A/B/C/D/E/F			
Combined	ABCDEF	AEF		
Colour	Not coated Primed Paint in various corrosion-protection designs in accordance with RAL colours			
Surface and corrosion protection	Without OKS(uncoated) OKS-G (primed) OKS-S (small) OKS-M (medium) OKS-L (large)			

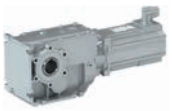

The gearbox kit

Mounting positions

► Mounting position (A to F) and position of system blocks (1 to 6)

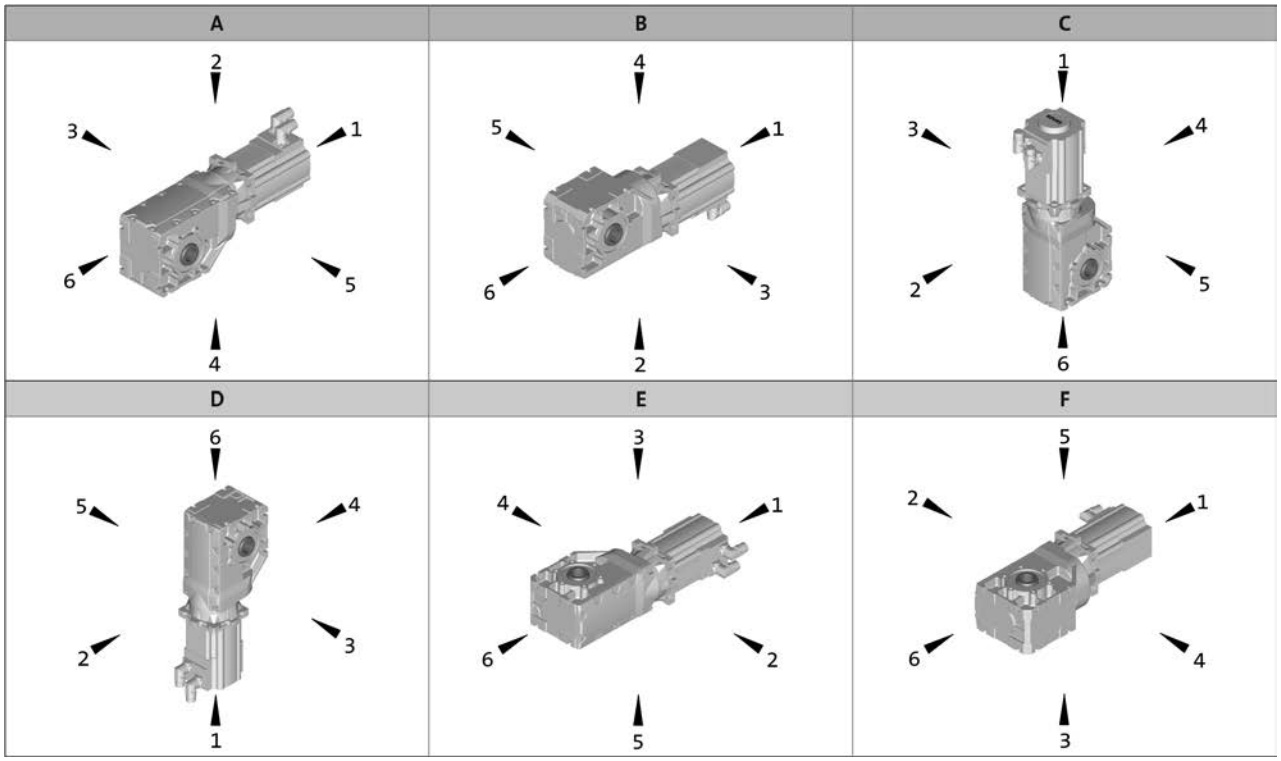

Hollow shaft: 0
Solid shaft: 3, 5, 8 (3+5)
Hollow shaft with shrink disc: 3, 5

Without flange: 0
Flange: 3, 5, 8 (3+5)
Connector / terminal box: 2, 3, 4, 5

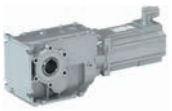

The gearbox kit

Motor details

Product	MCS			
	06C41 06F41 06I41	09D41 09L41 09F38 09H41	12D20 12D41 12H15 12H30 12H35 12L20 12L41	14D15 14D36 14H15 14H32 14L15 14L32 14P14 14P32
Connection type	Plug connectors	Plug connectors Terminal box		
Permanent magnet holding brake				
Rated torque [Nm]	2.2	8.0	12	22
Brake voltage [V]	DC 24			
Feedback	With absolute value encoder With incremental encoder With resolver			
Cooling	Self-ventilated			
Temperature monitoring	KTY83-110 thermal detector	KTY83-110 thermal detector PTC thermistor		
Approval	cURus GOST_R UkrSepro			
Degree of protection	IP54 IP65			

► Further information and installation feasibilities can be found in the Motors chapter.

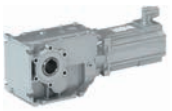

The gearbox kit

Motor details

Connection type
 Plug connectors  Terminal box

Cooling: self-ventilated
 With resolver  With permanent magnet brake  With feedback With feedback and permanent magnet brake



The gearbox kit

Gearbox details

Product	g500-B45	g500-B110	g500-B240	g500-B450
Driven shaft				
Solid shaft without keyway [mm]				
Solid shaft with featherkey [mm]	20x40		30x60	
Hollow shaft with keyway [mm]	18/20	20/25	30/35	35/40
Hollow shaft with shrink disc [mm]	20		30/35	35
Design	Standard stainless steel			
Gasket	Standard FPM (Viton)			
Bearing	Standard			
Fitting grease	Not enclosed Enclosed			
Housing				
Housing version	With foot With foot and centering			
Output flange				
flange diameter [mm]	110/120	120/160	160/200	200
Lubricant				
Type	CLP 460 [1)] CLP HC 320 CLP HC 220 CLP HC 220 USDA H1			
Oil-level inspection	Without inspection			Without inspection With inspection
Breather element	Without			Standard mounting position: Mounted Combined mounting position: loosely enclosed
Backlash				
Backlash	Standard			
Accessories				
Torque plate	Rubber buffers At threaded pitch circle	At threaded pitch circle	At threaded pitch circle At foot	At foot
Shaft cover	Hollow shaft Shrink disc: Rotating cover Shrink disc: Fixed cover			

[1)] Not suitable for geared servo motors.

► Further information and installation feasibilities can be found in the Gearboxes chapter.

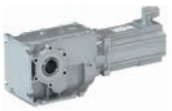

The gearbox kit

Gearbox details

Solid shaft



Foot mounting
without centring



Foot mounting
With centering



Flange with through holes

Hollow shaft



Foot mounting
without centring



Foot mounting
With centering



Flange with through holes

Hollow shaft with shrink disc



Foot mounting
without centring



Foot mounting
With centering

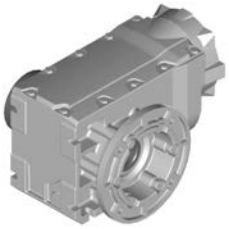

Flange with through holes

Accessories



2nd output shaft end



Torque plate
at foot



Torque plate
at threaded pitch circle

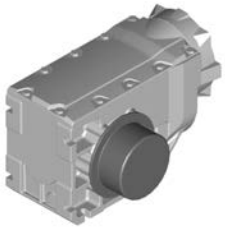

Cover
Hollow shaft/shrink disc



Dimensioning

General information about the data provided in this catalogue

The powers, torques and speeds specified in this catalogue are rounded values and are valid under the following conditions:

- Operating time/day = 8 h (100% OT)
- Duty class I for up to 10 switching operations/h
- Mounting positions and designs in this catalogue
- Standard lubricant
- T_{amb} = 20 °C for gearboxes,
  T_{amb} = 40 °C for motors (in accordance with EN 60034)
- Site altitude < = 1000 m amsl
- The selection tables provide the permissible mechanical powers and torques. For notes on the thermal power limit, see chapter drive dimensioning.
- The rated power specified for motors and geared motors applies to operating mode S1 (in accordance with EN 60034).

Under different operating conditions, the values obtained may vary from those listed here.
In the case of extreme operating conditions, please consult your Lenze sales office.



Dimensioning

Thermal power limit

The thermal power limit, defined by the heat balance, limits the permissible gearbox continuous power. It may be less than the mechanical power ratings listed in the selection tables.

The thermal power limit is affected by:
- the churning losses in the lubricant. These are determined by the mounting position and the circumferential speed of the gears;
- the load and the speed
- the ambient conditions: temperature, air circulation, input or dissipation via shafts and the foundation

If the following input speeds n_1 are exceeded, please contact Lenze:

Motor frame size	Mounting position A, B, E, F	Mounting position C, D
MCS06 ... 12	4000 r/min	3000 r/min
MCS14	3000 r/min	1500 r/min

► For a short period of time up to 5 min, 30 % higher speeds are permissible

Possible ways of extending the application area

- shaft sealing rings made from FP material/Viton (option)
- reduction in lubricant quantity
- cooling of the geared motor by means of air convection on the machine/system

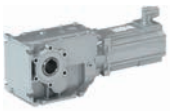

Dimensioning

Load capacity and application factor

Load capacity c of gearbox
Rated value for the load capacity of Lenze geared motors.
- c is the ratio of the permissible rated torque of the gearbox to the rated torque supplied by the drive component (e.g. the built-in Lenze motor).
- The value of c must always be greater than the value of the application factor k calculated for the application.

Application factor k (according to DIN 3990)
Takes into account the influence of temporally variable loads which are actually present during the anticipated operating time of gearboxes and geared motors.
k is determined by:
- the type of load
- the load intensity
- temporal influences

Duty class	Load type
I	Smooth operation, small or light jolts
II	Uneven operation, average jolts
III	Uneven operation, severe jolts and/or alternating load

Application factor k

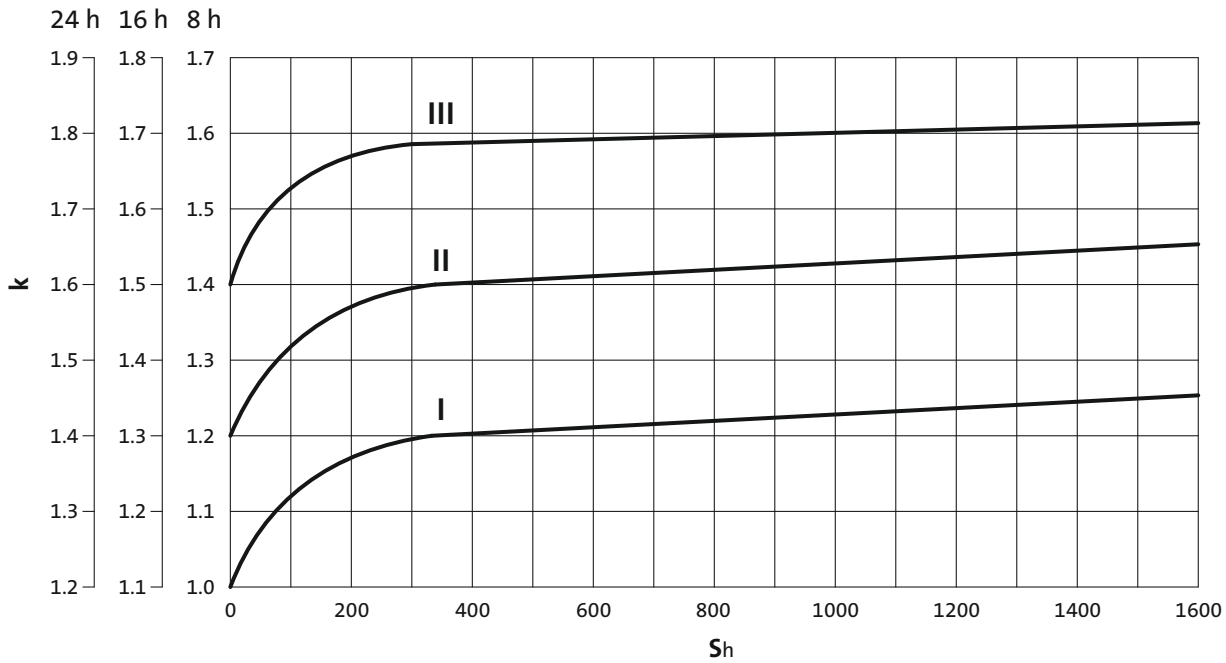

► S_h= switchings/h

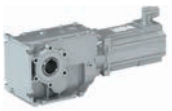

Dimensioning

Weights

The values given in the tables consider the following gearbox/motor combination:
- Gearbox with solid shaft including lubricant amount
- Motor with feedback

For versions deviating from this, additional weights have to be considered.

The respective values can be found for:
- Geared motors with feedback
  > Chapter: Geared motors/Technical data
- Motor options: Brake
  > Chapter: Motors/Accessories

Moments of inertia

The given moments of inertia of the gearbox refer to the drive shaft. The influence of the ratio (i^2) has been considered in the data.

When the total moment of inertia of the geared motor is calculated, the values of the geared motors and the brake have to be added.

The respective values can be found for:
- Geared motors with feedback
  > Chapter: Geared motors/Technical data/Selection tables
- Motor options: Brake
  > Chapter: Motors/Accessories





Selection tables, notes

Notes on the selection tables

The selection tables show the available combinations of gearbox type, number of stages, ratio and motor. They are used only to provide basic orientation.
The following legend indicates the structure of the selection tables.

Number of the gear stage of the gearbox

2-stage gearboxes

Inverter operation						i	Product		Cooling	
$M_{2,max}$ [Nm]	$n_{2,th}$ [r/min]	M_2 [Nm]	$n_{2,eto}$ [r/min]	c	J [kgcm²]		g500	MCS		
49	749	6	749	4.5	0.500	5.411	-B45	06F41	Selbst	29
49	749	8	749	3.6	0.600	5.411	-B45	06I41	Selbst	29
50	162	14	162	2.3	0.200	25.051	-B45	06C41	Selbst	29
50	162	29	162	1.1	0.200	25.051	-B45	06F41	Selbst	29

For operating mode S1
Torque **M_2** and
thermal output speed **$n_{2,th}$**

For operating mode S2,S3 und S6
Max. permissible acceleration torque of geared motor **$M_{2,max}$** and
output speed **$n_{2,eto}$**

Moment of inertia of geared motor

Ratio i

Product Gearbox

Product Motor

Type of motor cooling

Page number for dimensions

Load capacity of the gearbox
c is the ratio between the permissible rated torque of the gearbox and the rated torque of the three-phase AC motor (converted to the driven shaft).
c must be always higher than the service factor **k** determined for the application **k**.

$$c = \frac{M_{2,zul}}{M_{1,N} \cdot i \cdot \eta_{Getr}} > k$$

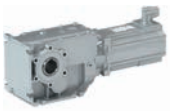

Selection tables

2-stage gearboxes

Inverter operation						i	Product		Cooling	
$M_{2, max}$ [Nm]	$n_{2, th}$ [r/min]	M_2 [Nm]	$n_{2, eto}$ [r/min]	c	J [kgcm²]		g500	MCS		
23	749	6	749	4.5	0.500	5.411	-B45	06F41	natural	31
24	387	6	387	5.4	0.300	10.466	-B45	06C41	natural	31
26	651	7	651	4.1	0.500	6.222	-B45	06F41	natural	31
27	348	7	348	4.9	0.200	11.640	-B45	06C41	natural	31
30	570	8	570	3.8	0.400	7.111	-B45	06F41	natural	31
31	303	8	303	4.2	0.200	13.386	-B45	06C41	natural	31
32	749	8	749	3.6	0.600	5.411	-B45	06I41	natural	31
34	495	9	495	3.4	0.400	8.178	-B45	06F41	natural	31
34	268	9	268	3.8	0.200	15.111	-B45	06C41	natural	31
37	651	9	651	3.3	0.600	6.222	-B45	06I41	natural	31
38	445	10	445	3.1	0.400	9.101	-B45	06F41	natural	31
38	445	10	445	5.8	0.500	9.101	-B110	06F41	natural	34
40	233	10	233	3.3	0.200	17.378	-B45	06C41	natural	31
42	570	10	570	3.0	0.500	7.111	-B45	06I41	natural	31
44	495	12	495	2.7	0.500	8.178	-B45	06I41	natural	31
44	387	12	387	2.7	0.300	10.466	-B45	06F41	natural	31
44	387	12	387	5.4	0.500	10.466	-B110	06F41	natural	34
44	209	11	209	2.9	0.200	19.365	-B45	06C41	natural	31
45	445	13	445	2.5	0.400	9.101	-B45	06I41	natural	31
45	387	15	387	2.2	0.400	10.466	-B45	06I41	natural	31
45	348	13	348	2.4	0.300	11.640	-B45	06F41	natural	31
45	348	17	348	1.9	0.400	11.640	-B45	06I41	natural	31
45	303	15	303	2.1	0.300	13.386	-B45	06F41	natural	31
45	303	19	303	1.7	0.400	13.386	-B45	06I41	natural	31
45	268	17	268	1.9	0.300	15.111	-B45	06F41	natural	31
45	268	22	268	1.5	0.400	15.111	-B45	06I41	natural	31
45	233	20	233	1.6	0.300	17.378	-B45	06F41	natural	31
45	233	25	233	1.3	0.400	17.378	-B45	06I41	natural	31
45	209	22	209	1.5	0.300	19.365	-B45	06F41	natural	31
45	209	28	209	1.2	0.300	19.365	-B45	06I41	natural	31
45	182	13	182	2.5	0.200	22.270	-B45	06C41	natural	31
45	182	25	182	1.3	0.300	22.270	-B45	06F41	natural	31
45	182	32	182	1.0	0.400	22.270	-B45	06I41	natural	31
45	162	14	162	2.6	0.200	25.051	-B45	06C41	natural	31
45	162	29	162	1.3	0.200	25.051	-B45	06F41	natural	31
45	162	36	162	1.0	0.300	25.051	-B45	06I41	natural	31
45	141	16	141	2.2	0.200	28.808	-B45	06C41	natural	31
45	141	33	141	1.1	0.200	28.808	-B45	06F41	natural	31
45	124	19	124	2.0	0.200	32.593	-B45	06C41	natural	31
45	108	21	108	1.7	0.200	37.481	-B45	06C41	natural	31

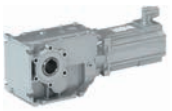

Selection tables

2-stage gearboxes

Inverter operation						i	Product		Cooling	
$M_{2, max}$ [Nm]	$n_{2, th}$ [r/min]	M_2 [Nm]	$n_{2, eto}$ [r/min]	c	J [kgcm²]		g500	MCS		
48	354	13	354	5.0	0.500	11.449	-B110	06F41	natural	34
51	180	13	180	5.8	0.200	22.489	-B110	06C41	natural	34
53	319	14	319	4.5	0.400	12.698	-B110	06F41	natural	34
54	445	13	445	4.7	0.600	9.101	-B110	06I41	natural	34
57	161	14	161	5.4	0.200	25.185	-B110	06C41	natural	34
61	277	17	277	3.9	0.400	14.603	-B110	06F41	natural	34
62	387	15	387	4.3	0.600	10.466	-B110	06I41	natural	34
65	260	18	260	3.7	0.400	15.556	-B110	06F41	natural	34
66	140	17	140	4.8	0.200	28.963	-B110	06C41	natural	34
67	354	16	354	4.0	0.600	11.449	-B110	06I41	natural	34
75	319	18	319	3.6	0.500	12.698	-B110	06I41	natural	34
75	226	20	226	3.4	0.400	17.889	-B110	06F41	natural	34
82	445	20	445	3.0	1.400	9.101	-B110	09D41	natural	34
82	207	22	207	3.2	0.300	19.556	-B110	06F41	natural	34
84	412	27	412	2.3	1.800	9.101	-B110	09F38	natural	34
84	399	26	399	5.3	5.700	4.889	-B240	12D20	natural	37
85	108	21	108	3.6	0.200	37.400	-B110	06C41	natural	34
86	277	21	277	3.1	0.500	14.603	-B110	06I41	natural	34
89	599	18	599	6.0	2.700	6.257	-B240	09F38	natural	37
89	387	23	387	2.8	1.400	10.466	-B110	09D41	natural	34
89	358	31	358	2.1	1.800	10.466	-B110	09F38	natural	34
90	354	25	354	2.6	1.400	11.449	-B110	09D41	natural	34
90	328	34	328	2.0	1.800	11.449	-B110	09F38	natural	34
90	319	28	319	2.3	1.300	12.698	-B110	09D41	natural	34
90	295	37	295	1.8	1.700	12.698	-B110	09F38	natural	34
90	277	32	277	2.0	1.300	14.603	-B110	09D41	natural	34
90	257	43	257	1.5	1.700	14.603	-B110	09F38	natural	34
92	260	22	260	3.0	0.400	15.556	-B110	06I41	natural	34
92	260	34	260	1.9	1.200	15.556	-B110	09D41	natural	34
92	260	56	260	1.2	2.000	15.556	-B110	09H41	natural	34
92	241	46	241	1.5	1.600	15.556	-B110	09F38	natural	34
94	180	26	180	2.9	0.300	22.489	-B110	06F41	natural	34
96	226	25	226	2.7	0.400	17.889	-B110	06I41	natural	34
96	226	39	226	1.8	1.200	17.889	-B110	09D41	natural	34
96	226	65	226	1.1	2.000	17.889	-B110	09H41	natural	34
96	210	53	210	1.3	1.600	17.889	-B110	09F38	natural	34
98	421	34	421	4.1	10.000	3.565	-B240	12H15	natural	37
100	207	28	207	2.6	0.400	19.556	-B110	06I41	natural	34
104	180	32	180	2.3	0.400	22.489	-B110	06I41	natural	34
105	161	29	161	2.7	0.300	25.185	-B110	06F41	natural	34



Selection tables

2-stage gearboxes

Inverter operation						i	Product		Cooling	
$M_{2, max}$ [Nm]	$n_{2, th}$ [r/min]	M_2 [Nm]	$n_{2, eto}$ [r/min]	c	J [kgcm²]		g500	MCS		
106	108	43	108	1.8	0.300	37.400	-B110	06F41	natural	34
106	108	53	108	1.4	0.400	37.400	-B110	06I41	natural	34
107	312	33	312	4.4	5.200	6.257	-B240	12D20	natural	37
108	161	36	161	2.2	0.400	25.185	-B110	06I41	natural	34
110	140	33	140	2.4	0.300	28.963	-B110	06F41	natural	34
110	140	41	140	1.9	0.400	28.963	-B110	06I41	natural	34
110	84	27	84	3.3	0.200	48.167	-B110	06C41	natural	34
110	84	55	84	1.6	0.300	48.167	-B110	06F41	natural	34
110	84	69	84	1.3	0.300	48.167	-B110	06I41	natural	34
118	283	36	283	4.6	5.700	6.883	-B240	12D20	natural	37
134	250	41	250	4.2	5.500	7.817	-B240	12D20	natural	37
135	614	37	614	3.1	9.000	4.889	-B240	12H30	natural	37
135	307	46	307	3.2	9.000	4.889	-B240	12H15	natural	37
136	68	34	68	5.8	0.200	59.630	-B240	06C41	natural	37
138	547	46	547	2.8	14.000	3.565	-B240	12L20	natural	37
140	121	38	121	4.5	0.400	33.433	-B240	06F41	natural	37
147	399	63	399	2.1	12.000	4.889	-B240	12L20	natural	37
156	480	48	480	2.6	8.500	6.257	-B240	12H30	natural	37
156	312	80	312	1.8	12.000	6.257	-B240	12L20	natural	37
156	240	59	240	2.6	8.500	6.257	-B240	12H15	natural	37
158	151	38	151	4.5	0.500	26.878	-B240	06I41	natural	37
159	107	43	107	4.0	0.400	37.967	-B240	06F41	natural	37
161	207	49	207	3.5	5.100	9.440	-B240	12D20	natural	37
173	212	42	212	4.1	1.500	19.143	-B240	09D41	natural	37
179	283	88	283	1.9	12.000	6.883	-B240	12L20	natural	37
179	218	65	218	2.7	9.000	6.883	-B240	12H15	natural	37
180	133	43	133	4.0	0.500	30.522	-B240	06I41	natural	37
181	94	49	94	4.0	0.300	43.267	-B240	06F41	natural	37
183	182	56	182	3.3	5.000	10.720	-B240	12D20	natural	37
186	196	45	196	3.8	1.400	20.650	-B240	09D41	natural	37
187	250	100	250	1.7	12.000	7.817	-B240	12L20	natural	37
187	192	74	192	2.5	8.800	7.817	-B240	12H15	natural	37
191	207	121	207	1.4	12.000	9.440	-B240	12L20	natural	37
191	159	90	159	2.1	8.400	9.440	-B240	12H15	natural	37
197	121	48	121	3.6	0.500	33.433	-B240	06I41	natural	37
204	182	137	182	1.4	12.000	10.720	-B240	12L20	natural	37
204	140	102	140	2.0	8.300	10.720	-B240	12H15	natural	37
205	82	56	82	3.5	0.300	49.133	-B240	06F41	natural	37
207	161	63	161	3.0	4.700	12.081	-B240	12D20	natural	37
208	248	92	248	1.8	8.000	12.081	-B240	12H30	natural	37

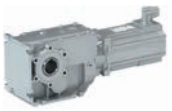

Selection tables

2-stage gearboxes

Inverter operation						i	Product		Cooling	
$M_{2, max}$ [Nm]	$n_{2, th}$ [r/min]	M_2 [Nm]	$n_{2, eto}$ [r/min]	c	J [kgcm²]		g500	MCS		
208	161	155	161	1.2	11.000	12.081	-B240	12L20	natural	37
208	124	115	124	1.8	8.000	12.081	-B240	12H15	natural	37
212	173	51	173	3.4	1.400	23.450	-B240	09D41	natural	37
214	250	44	250	3.7	2.100	15.008	-B240	09F38	natural	37
217	142	72	142	2.8	4.700	13.719	-B240	12D20	natural	37
217	142	176	142	1.1	11.000	13.719	-B240	12L20	natural	37
217	109	130	109	1.7	8.000	13.719	-B240	12H15	natural	37
220	77	60	77	3.2	0.300	52.510	-B240	06F41	natural	37
223	200	114	200	1.6	7.900	15.008	-B240	12H30	natural	37
223	130	78	130	2.6	4.600	15.008	-B240	12D20	natural	37
223	130	192	130	1.1	11.000	15.008	-B240	12L20	natural	37
223	100	143	100	1.6	7.900	15.008	-B240	12H15	natural	37
224	107	54	107	3.2	0.400	37.967	-B240	06I41	natural	37
233	77	75	77	2.5	0.400	52.510	-B240	06I41	natural	37
240	240	61	240	2.8	2.300	16.857	-B240	09H41	natural	37
240	240	69	240	2.5	4.400	16.857	-B240	12D41	natural	37
240	240	72	240	2.4	3.200	16.857	-B240	09L41	natural	37
240	223	50	223	3.6	1.900	16.857	-B240	09F38	natural	37
240	212	69	212	2.5	2.300	19.143	-B240	09H41	natural	37
240	212	78	212	2.2	4.400	19.143	-B240	12D41	natural	37
240	212	82	212	2.1	3.200	19.143	-B240	09L41	natural	37
240	196	56	196	3.1	1.900	19.143	-B240	09F38	natural	37
240	196	75	196	2.3	2.200	20.650	-B240	09H41	natural	37
240	196	84	196	2.0	4.300	20.650	-B240	12D41	natural	37
240	196	88	196	1.9	3.100	20.650	-B240	09L41	natural	37
240	182	61	182	2.9	1.800	20.650	-B240	09F38	natural	37
240	178	128	178	1.5	7.700	16.857	-B240	12H30	natural	37
240	173	85	173	2.0	2.200	23.450	-B240	09H41	natural	37
240	173	96	173	1.8	4.300	23.450	-B240	12D41	natural	37
240	173	100	173	1.7	3.100	23.450	-B240	09L41	natural	37
240	171	147	171	1.2	7.600	20.650	-B240	12H35	natural	37
240	160	69	160	2.6	1.800	23.450	-B240	09F38	natural	37
240	157	145	157	1.3	7.700	19.143	-B240	12H30	natural	37
240	151	59	151	2.9	1.300	26.878	-B240	09D41	natural	37
240	151	97	151	1.8	2.100	26.878	-B240	09H41	natural	37
240	151	115	151	1.5	3.000	26.878	-B240	09L41	natural	37
240	145	157	145	1.2	7.600	20.650	-B240	12H30	natural	37
240	140	79	140	2.2	1.700	26.878	-B240	09F38	natural	37
240	133	67	133	2.6	1.300	30.522	-B240	09D41	natural	37
240	133	110	133	1.6	2.100	30.522	-B240	09H41	natural	37

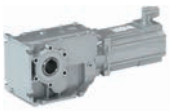

Selection tables

2-stage gearboxes

Inverter operation						i	Product		Cooling	
$M_{2, max}$ [Nm]	$n_{2, th}$ [r/min]	M_2 [Nm]	$n_{2, eto}$ [r/min]	c	J [kgcm²]		g500	MCS		
240	133	130	133	1.3	3.000	30.522	-B240	09L41	natural	37
240	128	178	128	1.1	7.600	23.450	-B240	12H30	natural	37
240	123	90	123	2.0	1.700	30.522	-B240	09F38	natural	37
240	121	73	121	2.4	1.300	33.433	-B240	09D41	natural	37
240	121	121	121	1.4	2.100	33.433	-B240	09H41	natural	37
240	121	143	121	1.2	3.000	33.433	-B240	09L41	natural	37
240	116	88	116	2.5	4.400	16.857	-B240	12D20	natural	37
240	116	216	116	1.0	11.000	16.857	-B240	12L20	natural	37
240	112	98	112	1.8	1.700	33.433	-B240	09F38	natural	37
240	107	83	107	2.1	1.200	37.967	-B240	09D41	natural	37
240	107	137	107	1.3	2.000	37.967	-B240	09H41	natural	37
240	107	162	107	1.1	2.900	37.967	-B240	09L41	natural	37
240	102	100	102	2.2	4.400	19.143	-B240	12D20	natural	37
240	99	112	99	1.6	1.600	37.967	-B240	09F38	natural	37
240	94	62	94	3.2	0.400	43.267	-B240	06I41	natural	37
240	94	108	94	2.0	4.300	20.650	-B240	12D20	natural	37
240	89	160	89	1.5	7.700	16.857	-B240	12H15	natural	37
240	83	123	83	1.8	4.300	23.450	-B240	12D20	natural	37
240	82	70	82	2.8	0.400	49.133	-B240	06I41	natural	37
240	78	182	78	1.3	7.700	19.143	-B240	12H15	natural	37
240	73	196	73	1.2	7.600	20.650	-B240	12H15	natural	37
240	68	68	68	2.9	0.300	59.630	-B240	06F41	natural	37
240	68	85	68	2.3	0.400	59.630	-B240	06I41	natural	37
240	64	223	64	1.1	7.600	23.450	-B240	12H15	natural	37

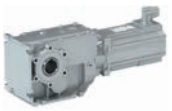

Selection tables

3-stage gearboxes

Inverter operation						i	Product		Cooling	
$M_{2, max}$ [Nm]	$n_{2, th}$ [r/min]	M_2 [Nm]	$n_{2, eto}$ [r/min]	c	J [kgcm²]		g500	MCS		
189	437	52	437	3.9	9.800	6.860	-B450	12H30	natural	43
189	219	60	219	5.1	11.000	6.860	-B450	14D15	natural	43
189	219	65	219	3.9	9.800	6.860	-B450	12H15	natural	43
195	46	49	46	4.0	0.200	87.563	-B240	06C41	natural	37
221	390	64	390	3.1	15.000	5.002	-B450	12L20	natural	43
221	41	55	41	3.5	0.200	99.437	-B240	06C41	natural	37
238	100	57	100	5.1	0.600	40.330	-B450	06I41	natural	43
240	36	63	36	3.4	0.200	113.673	-B240	06C41	natural	37
240	36	126	36	1.7	0.300	113.673	-B240	06F41	natural	37
240	31	72	31	3.0	0.200	129.087	-B240	06C41	natural	37
253	284	88	284	2.6	13.000	6.860	-B450	12L20	natural	43
257	161	81	161	4.5	11.000	9.315	-B450	14D15	natural	43
257	161	88	161	4.2	11.000	9.315	-B450	12H15	natural	43
260	65	71	65	5.2	0.700	62.262	-B450	06F41	natural	43
261	300	76	300	3.7	19.000	5.002	-B450	14H15	natural	43
266	90	64	90	4.3	0.500	45.245	-B450	06I41	natural	43
280	300	109	300	2.6	28.000	5.002	-B450	14L15	natural	43
280	270	143	270	2.0	39.000	5.002	-B450	14P14	natural	43
285	145	90	145	4.3	11.000	10.328	-B450	14D15	natural	43
285	145	98	145	3.9	10.000	10.328	-B450	12H15	natural	43
295	81	71	81	4.3	0.500	50.167	-B450	06I41	natural	43
306	109	93	109	4.4	5.000	17.885	-B450	12D20	natural	43
308	219	104	219	3.0	17.000	6.860	-B450	14H15	natural	43
308	219	150	219	2.1	26.000	6.860	-B450	14L15	natural	43
308	197	195	197	1.6	37.000	6.860	-B450	14P14	natural	43
319	53	87	53	4.2	0.600	76.271	-B450	06F41	natural	43
328	111	79	111	4.1	1.400	36.373	-B450	09D41	natural	43
329	28	82	28	5.0	0.200	144.128	-B450	06C41	natural	43
339	98	104	98	4.0	5.000	19.831	-B450	12D20	natural	43
352	235	97	235	3.3	9.200	12.775	-B450	12H30	natural	43
352	117	112	117	3.6	10.000	12.775	-B450	14D15	natural	43
352	117	121	117	3.3	9.200	12.775	-B450	12H15	natural	43
360	148	74	148	4.5	2.200	25.294	-B450	09F38	natural	43
364	100	88	100	4.2	1.400	40.330	-B450	09D41	natural	43
364	25	91	25	4.5	0.200	159.807	-B450	06C41	natural	43
367	65	89	65	4.1	0.800	62.262	-B450	06I41	natural	43
368	209	119	209	2.8	14.000	9.315	-B450	12L20	natural	43
368	161	142	161	2.6	17.000	9.315	-B450	14H15	natural	43
368	161	204	161	1.8	27.000	9.315	-B450	14L15	natural	43
368	145	265	145	1.4	38.000	9.315	-B450	14P14	natural	43

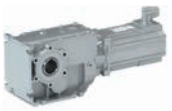

Selection tables

3-stage gearboxes

Inverter operation						i	Product		Cooling	
$M_{2, max}$ [Nm]	$n_{2, th}$ [r/min]	M_2 [Nm]	$n_{2, eto}$ [r/min]	c	J [kgcm²]		g500	MCS		
374	45	102	45	3.6	0.400	89.534	-B450	06F41	natural	43
384	189	132	189	2.7	14.000	10.328	-B450	12L20	natural	43
384	145	157	145	2.5	17.000	10.328	-B450	14H15	natural	43
384	145	226	145	1.7	26.000	10.328	-B450	14L15	natural	43
384	131	294	131	1.3	38.000	10.328	-B450	14P14	natural	43
390	212	108	212	3.1	9.100	14.165	-B450	12H30	natural	43
390	178	93	178	3.5	4.700	22.813	-B450	12D41	natural	43
390	106	124	106	3.4	9.900	14.165	-B450	14D15	natural	43
390	106	135	106	3.1	9.100	14.165	-B450	12H15	natural	43
390	86	119	86	3.5	4.700	22.813	-B450	12D20	natural	43
398	134	82	134	4.0	2.000	27.945	-B450	09F38	natural	43
399	23	100	23	4.1	0.200	174.919	-B450	06C41	natural	43
404	153	164	153	2.3	12.000	12.775	-B450	12L20	natural	43
404	117	194	117	2.1	16.000	12.775	-B450	14H15	natural	43
404	117	279	117	1.4	25.000	12.775	-B450	14L15	natural	43
404	106	364	106	1.1	37.000	12.775	-B450	14P14	natural	43
405	59	98	59	3.8	0.700	68.788	-B450	06I41	natural	43
408	90	99	90	3.7	1.300	45.245	-B450	09D41	natural	43
415	41	113	41	3.2	0.400	99.274	-B450	06F41	natural	43
422	138	182	138	2.1	12.000	14.165	-B450	12L20	natural	43
422	106	215	106	2.0	16.000	14.165	-B450	14H15	natural	43
422	106	309	106	1.4	25.000	14.165	-B450	14L15	natural	43
422	95	404	95	1.1	36.000	14.165	-B450	14P14	natural	43
432	160	103	160	3.1	4.700	25.294	-B450	12D41	natural	43
432	77	132	77	3.1	4.700	25.294	-B450	12D20	natural	43
433	178	82	178	3.8	2.600	22.813	-B450	09H41	natural	43
434	184	124	184	2.8	8.500	16.349	-B450	12H30	natural	43
434	119	210	119	1.9	12.000	16.349	-B450	12L20	natural	43
434	92	143	92	3.0	9.300	16.349	-B450	14D15	natural	43
434	92	155	92	2.8	8.500	16.349	-B450	12H15	natural	43
434	92	248	92	1.8	15.000	16.349	-B450	14H15	natural	43
434	92	357	92	1.2	25.000	16.349	-B450	14L15	natural	43
438	178	98	178	3.2	3.500	22.813	-B450	09L41	natural	43
441	121	91	121	3.6	2.000	30.985	-B450	09F38	natural	43
442	21	111	21	3.7	0.200	193.948	-B450	06C41	natural	43
446	197	127	197	2.6	8.300	17.885	-B450	12H35	natural	43
446	168	136	168	2.6	8.300	17.885	-B450	12H30	natural	43
446	109	229	109	1.8	12.000	17.885	-B450	12L20	natural	43
446	84	156	84	2.9	9.100	17.885	-B450	14D15	natural	43
446	84	170	84	2.6	8.300	17.885	-B450	12H15	natural	43

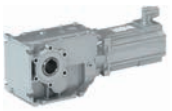

Selection tables

3-stage gearboxes

Inverter operation						i	Product		Cooling	
$M_{2, max}$ [Nm]	$n_{2, th}$ [r/min]	M_2 [Nm]	$n_{2, eto}$ [r/min]	c	J [kgcm²]		g500	MCS		
446	84	272	84	1.6	15.000	17.885	-B450	14H15	natural	43
446	84	391	84	1.1	24.000	17.885	-B450	14L15	natural	43
449	53	109	53	3.4	0.700	76.271	-B450	06I41	natural	43
450	160	91	160	3.5	2.600	25.294	-B450	09H41	natural	43
450	160	108	160	3.0	3.500	25.294	-B450	09L41	natural	43
450	155	163	155	2.1	8.000	22.813	-B450	12H35	natural	43
450	151	151	151	2.4	8.300	19.831	-B450	12H30	natural	43
450	145	101	145	3.2	2.400	27.945	-B450	09H41	natural	43
450	145	114	145	2.8	4.500	27.945	-B450	12D41	natural	43
450	145	119	145	2.7	3.300	27.945	-B450	09L41	natural	43
450	139	180	139	1.9	8.000	25.294	-B450	12H35	natural	43
450	132	173	132	2.1	8.000	22.813	-B450	12H30	natural	43
450	131	112	131	2.9	2.400	30.985	-B450	09H41	natural	43
450	131	127	131	2.5	4.500	30.985	-B450	12D41	natural	43
450	131	132	131	2.4	3.300	30.985	-B450	09L41	natural	43
450	126	199	126	1.7	7.800	27.945	-B450	12H35	natural	43
450	119	192	119	1.9	8.000	25.294	-B450	12H30	natural	43
450	114	221	114	1.5	7.800	30.985	-B450	12H35	natural	43
450	111	131	111	2.5	2.200	36.373	-B450	09H41	natural	43
450	111	155	111	2.1	3.100	36.373	-B450	09L41	natural	43
450	107	212	107	1.7	7.800	27.945	-B450	12H30	natural	43
450	103	107	103	3.1	1.800	36.373	-B450	09F38	natural	43
450	100	146	100	2.5	2.200	40.330	-B450	09H41	natural	43
450	100	172	100	2.1	3.100	40.330	-B450	09L41	natural	43
450	98	254	98	1.6	12.000	19.831	-B450	12L20	natural	43
450	97	235	97	1.5	7.800	30.985	-B450	12H30	natural	43
450	93	119	93	3.2	1.800	40.330	-B450	09F38	natural	43
450	90	163	90	2.3	2.100	45.245	-B450	09H41	natural	43
450	90	193	90	1.9	3.000	45.245	-B450	09L41	natural	43
450	86	293	86	1.4	11.000	22.813	-B450	12L20	natural	43
450	83	133	83	2.8	1.700	45.245	-B450	09F38	natural	43
450	81	110	81	3.4	1.300	50.167	-B450	09D41	natural	43
450	81	181	81	2.0	2.100	50.167	-B450	09H41	natural	43
450	81	214	81	1.7	3.000	50.167	-B450	09L41	natural	43
450	77	324	77	1.3	11.000	25.294	-B450	12L20	natural	43
450	76	173	76	2.6	9.100	19.831	-B450	14D15	natural	43
450	76	188	76	2.4	8.300	19.831	-B450	12H15	natural	43
450	76	301	76	1.5	15.000	19.831	-B450	14H15	natural	43
450	76	433	76	1.0	24.000	19.831	-B450	14L15	natural	43
450	75	148	75	2.5	1.700	50.167	-B450	09F38	natural	43

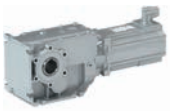

Selection tables

3-stage gearboxes

Inverter operation						i	Product		Cooling	
$M_{2, max}$ [Nm]	$n_{2, th}$ [r/min]	M_2 [Nm]	$n_{2, eto}$ [r/min]	c	J [kgcm²]		g500	MCS		
450	72	123	72	3.0	1.600	56.154	-B450	09D41	natural	43
450	70	146	70	2.8	4.500	27.945	-B450	12D20	natural	43
450	70	358	70	1.1	11.000	27.945	-B450	12L20	natural	43
450	67	165	67	2.3	2.000	56.154	-B450	09F38	natural	43
450	66	199	66	2.3	8.800	22.813	-B450	14D15	natural	43
450	66	217	66	2.1	8.000	22.813	-B450	12H15	natural	43
450	66	347	66	1.3	15.000	22.813	-B450	14H15	natural	43
450	65	136	65	2.7	1.600	62.262	-B450	09D41	natural	43
450	63	162	63	2.5	4.500	30.985	-B450	12D20	natural	43
450	63	397	63	1.0	11.000	30.985	-B450	12L20	natural	43
450	60	183	60	2.0	2.000	62.262	-B450	09F38	natural	43
450	59	150	59	2.4	1.500	68.788	-B450	09D41	natural	43
450	59	221	59	2.0	8.800	25.294	-B450	14D15	natural	43
450	59	240	59	1.9	8.000	25.294	-B450	12H15	natural	43
450	59	384	59	1.2	15.000	25.294	-B450	14H15	natural	43
450	55	203	55	1.9	1.900	68.788	-B450	09F38	natural	43
450	54	265	54	1.7	7.800	27.945	-B450	12H15	natural	43
450	53	167	53	2.2	1.500	76.271	-B450	09D41	natural	43
450	49	225	49	1.7	1.900	76.271	-B450	09F38	natural	43
450	48	294	48	1.5	7.800	30.985	-B450	12H15	natural	43
450	45	128	45	2.9	0.500	89.534	-B450	06I41	natural	43
450	45	196	45	1.9	1.300	89.534	-B450	09D41	natural	43
450	45	323	45	1.1	2.100	89.534	-B450	09H41	natural	43
450	42	264	42	1.4	1.700	89.534	-B450	09F38	natural	43
450	41	141	41	2.6	0.500	99.274	-B450	06I41	natural	43
450	41	217	41	1.7	1.300	99.274	-B450	09D41	natural	43
450	41	358	41	1.0	2.100	99.274	-B450	09H41	natural	43
450	38	292	38	1.3	1.700	99.274	-B450	09F38	natural	43
450	36	127	36	3.2	0.400	111.372	-B450	06F41	natural	43
450	36	159	36	2.6	0.500	111.372	-B450	06I41	natural	43
450	36	243	36	1.7	1.300	111.372	-B450	09D41	natural	43
450	36	402	36	1.0	2.100	111.372	-B450	09H41	natural	43
450	35	293	35	1.5	4.500	56.154	-B450	12D20	natural	43
450	34	328	34	1.3	1.700	111.372	-B450	09F38	natural	43
450	33	141	33	2.9	0.400	123.487	-B450	06F41	natural	43
450	33	176	33	2.3	0.500	123.487	-B450	06I41	natural	43
450	33	270	33	1.5	1.300	123.487	-B450	09D41	natural	43
450	31	325	31	1.4	4.500	62.262	-B450	12D20	natural	43
450	30	364	30	1.1	1.700	123.487	-B450	09F38	natural	43
450	28	164	28	2.5	0.300	144.128	-B450	06F41	natural	43



Selection tables

3-stage gearboxes

Inverter operation						i	Product		Cooling	
$M_{2, max}$ [Nm]	$n_{2, th}$ [r/min]	M_2 [Nm]	$n_{2, eto}$ [r/min]	c	J [kgcm²]		g500	MCS		
450	28	205	28	2.0	0.400	144.128	-B450	06I41	natural	43
450	28	359	28	1.3	4.400	68.788	-B450	12D20	natural	43
450	26	398	26	1.1	4.400	76.271	-B450	12D20	natural	43
450	25	182	25	2.2	0.300	159.807	-B450	06F41	natural	43
450	25	228	25	1.8	0.400	159.807	-B450	06I41	natural	43
450	23	199	23	2.0	0.300	174.919	-B450	06F41	natural	43
450	23	249	23	1.6	0.400	174.919	-B450	06I41	natural	43
450	21	221	21	1.8	0.300	193.948	-B450	06F41	natural	43
450	21	276	21	1.5	0.400	193.948	-B450	06I41	natural	43



Dimensions, notes

Notes on the dimensions

The following legend shows the layout of the dimension sheets.

Product gearbox

g500-B110

Driven shaft design

Abmessungen mit Hohlwelle

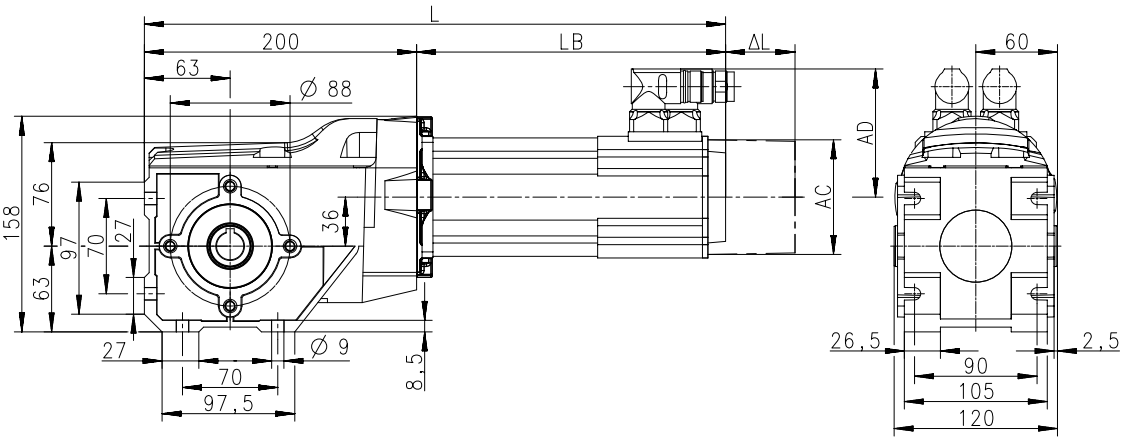

Product Motor

Produkt			MCS					
			06C41	06F41	06I41	09D41	09F38	09H41
Abmessungen								
Gesamtlänge	**L**	**[mm]**	~~331~~	361	391	384	404	424
Länge Motor	**LB**	**[mm]**	~~131.4~~	161.4	191.4	183.9	203.9	223.9
Länge Motoranbauten	**Δ L**	**[mm]**	100			71		
Motordurchmesser	**AC**	**[mm]**	86			89		
Abstand Motor/Anschluss	**AD**	**[mm]**	77			89.7		

Distance of motor centre to the end of connector

Total length of the drive without built-on accessories

Motor diameter

Motor length without built-on accessories

Additional length of the built-on accessories (longest version)



Dimensions, self-ventilated motors

g500-B45

Dimensions with hollow shaft

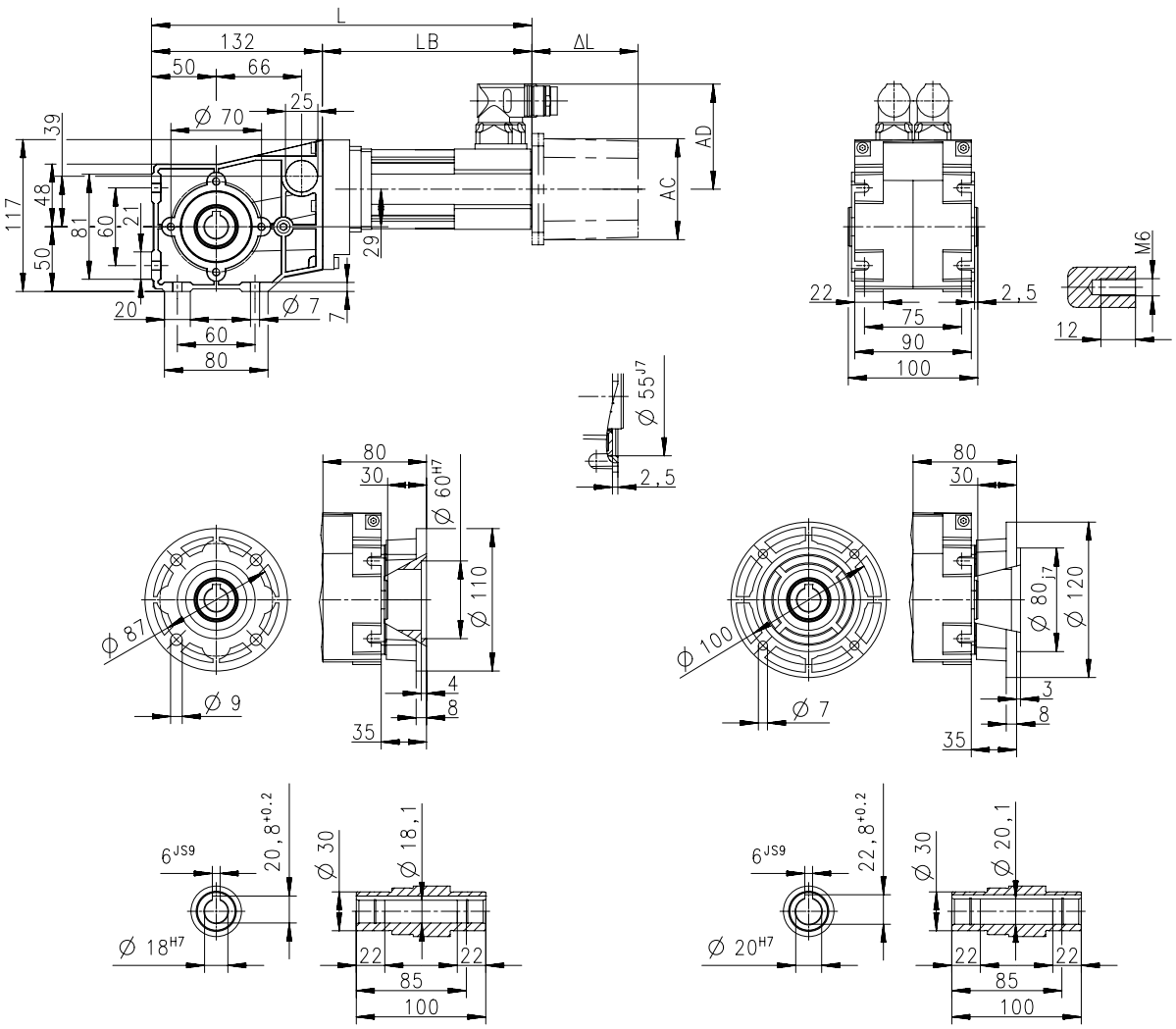

8800145-00

Product			MCS		
			06C41	06F41	06I41
Dimensions					
Total length	**L**	**[mm]**	264	294	324
Motor length	**LB**	**[mm]**	131.4	161.4	191.4
Length of motor options	**Δ L**	**[mm]**	100		
Motor diameter	**AC**	**[mm]**	86		
Distance motor/connection	**AD**	**[mm]**	77		



Dimensions, self-ventilated motors

g500-B45

Dimensions with solid shaft

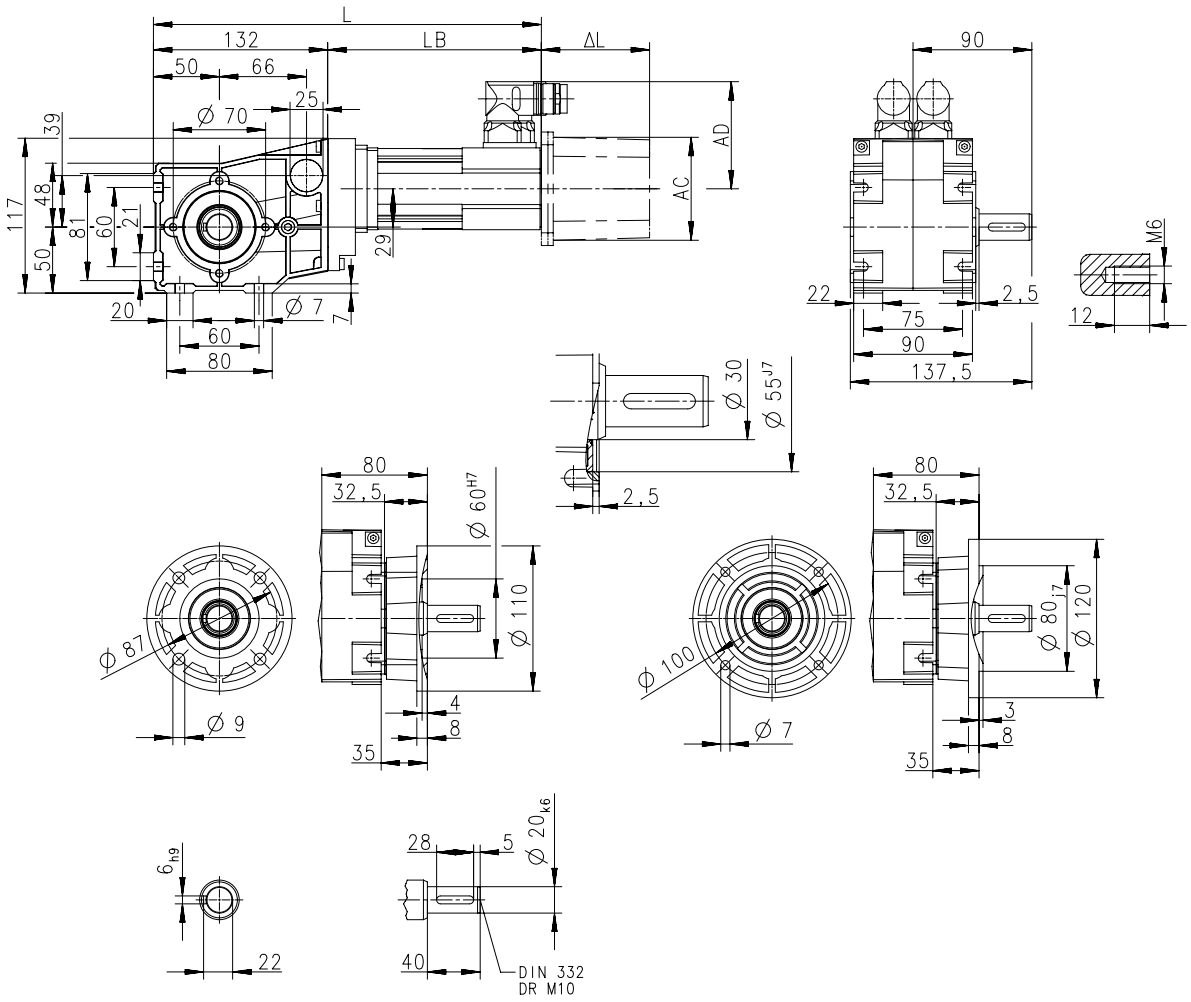

Product			MCS		
			06C41	06F41	06I41
Dimensions					
Total length	**L**	**[mm]**	264	294	324
Motor length	**LB**	**[mm]**	131.4	161.4	191.4
Length of motor options	**Δ L**	**[mm]**	100		
Motor diameter	**AC**	**[mm]**	86		
Distance motor/connection	**AD**	**[mm]**	77		



Dimensions, self-ventilated motors

g500-B45

Dimensions with shrink disc

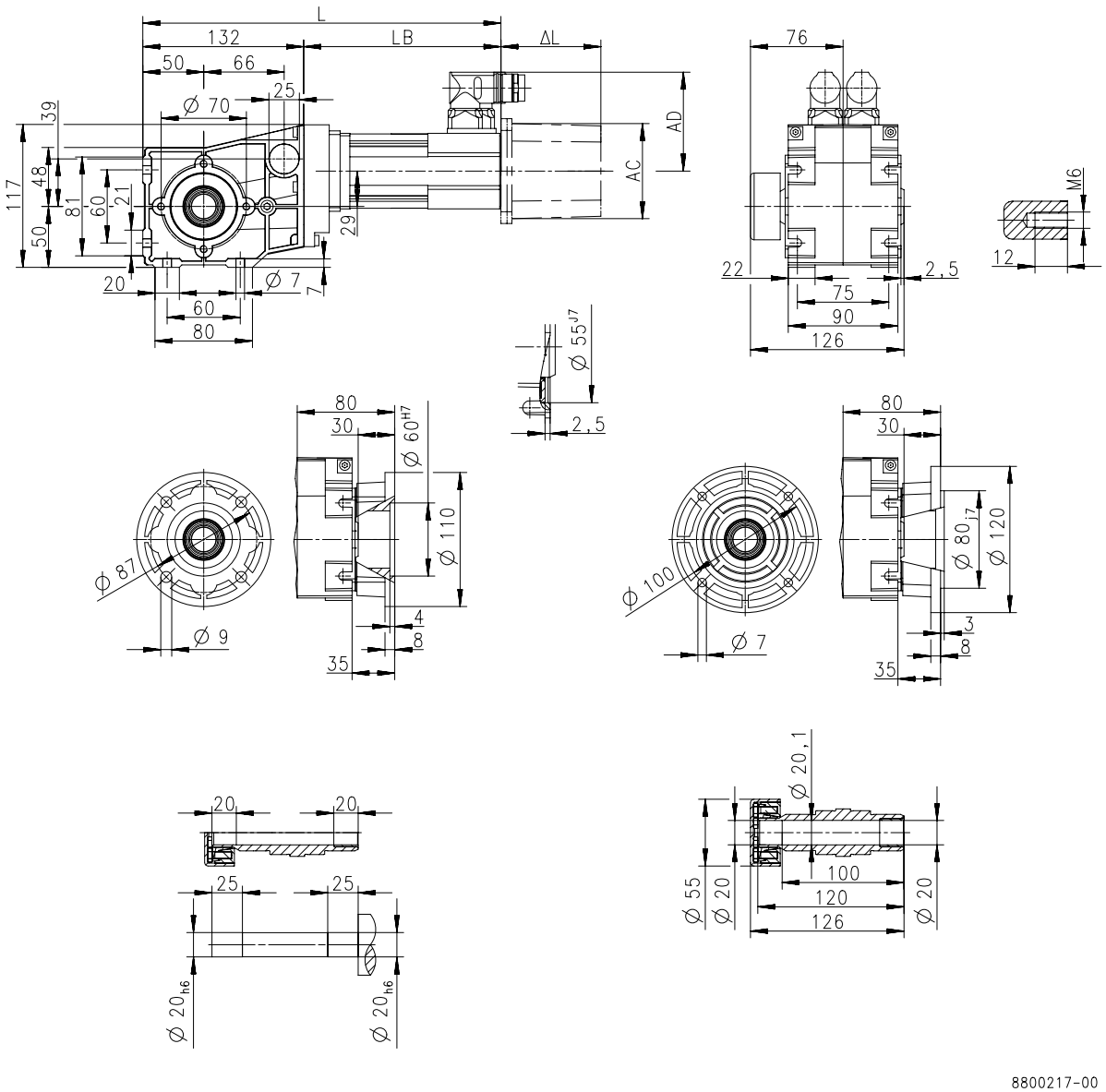

Product			MCS		
			06C41	06F41	06I41
Dimensions					
Total length	**L**	**[mm]**	264	294	324
Motor length	**LB**	**[mm]**	131.4	161.4	191.4
Length of motor options	**Δ L**	**[mm]**	100		
Motor diameter	**AC**	**[mm]**	86		
Distance motor/connection	**AD**	**[mm]**	77		



Dimensions, self-ventilated motors

g500-B110

Dimensions with hollow shaft

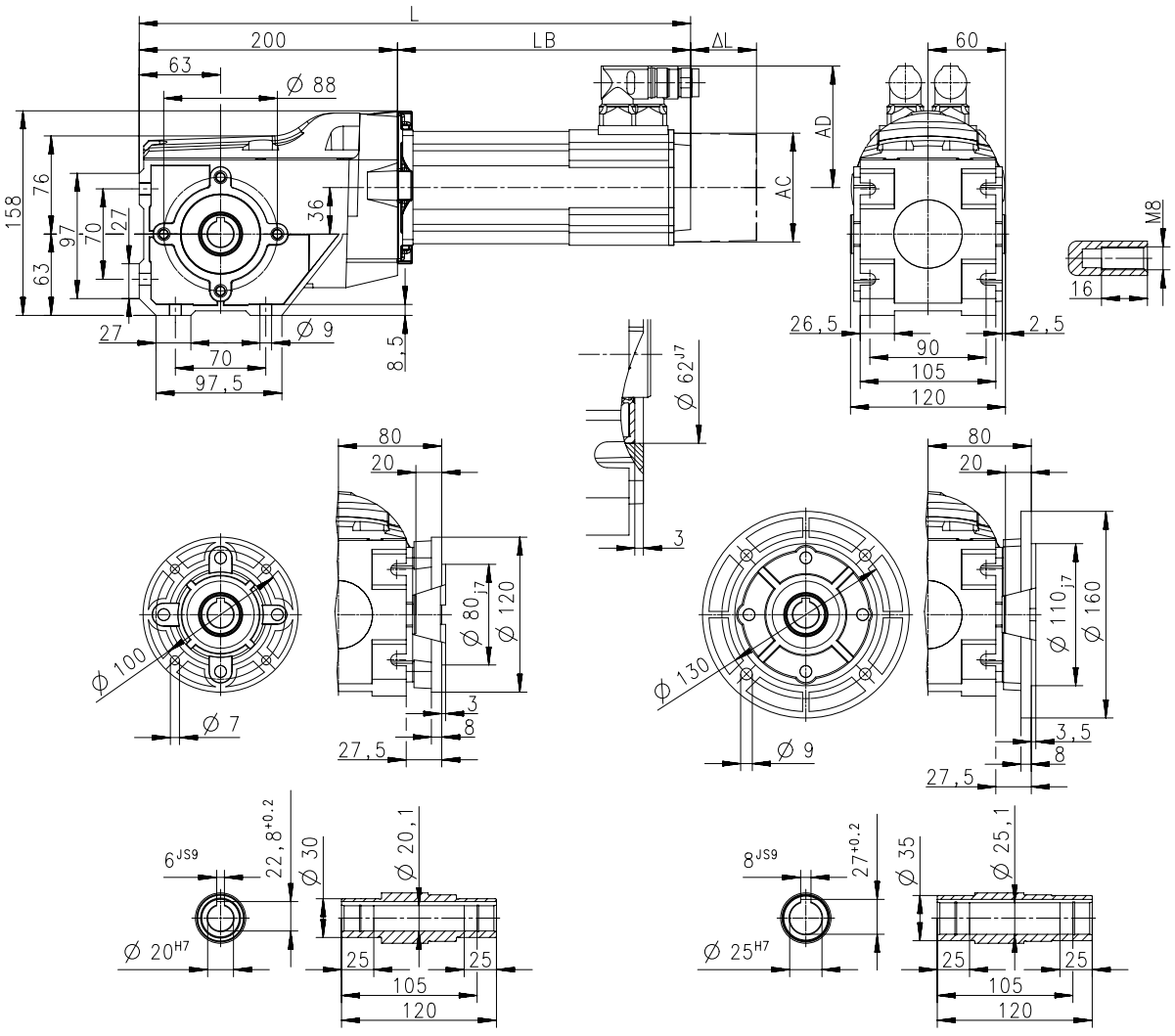

Product			MCS					
			06C41	06F41	06I41	09D41	09F38	09H41
Dimensions								
Total length	**L**	**[mm]**	331	361	391	384	404	424
Motor length	**LB**	**[mm]**	131.4	161.4	191.4	183.9	203.9	223.9
Length of motor options	**Δ L**	**[mm]**	100			71		
Motor diameter	**AC**	**[mm]**	86			89		
Distance motor/connection	**AD**	**[mm]**	77			89.7		



Dimensions, self-ventilated motors

g500-B110

Dimensions with solid shaft

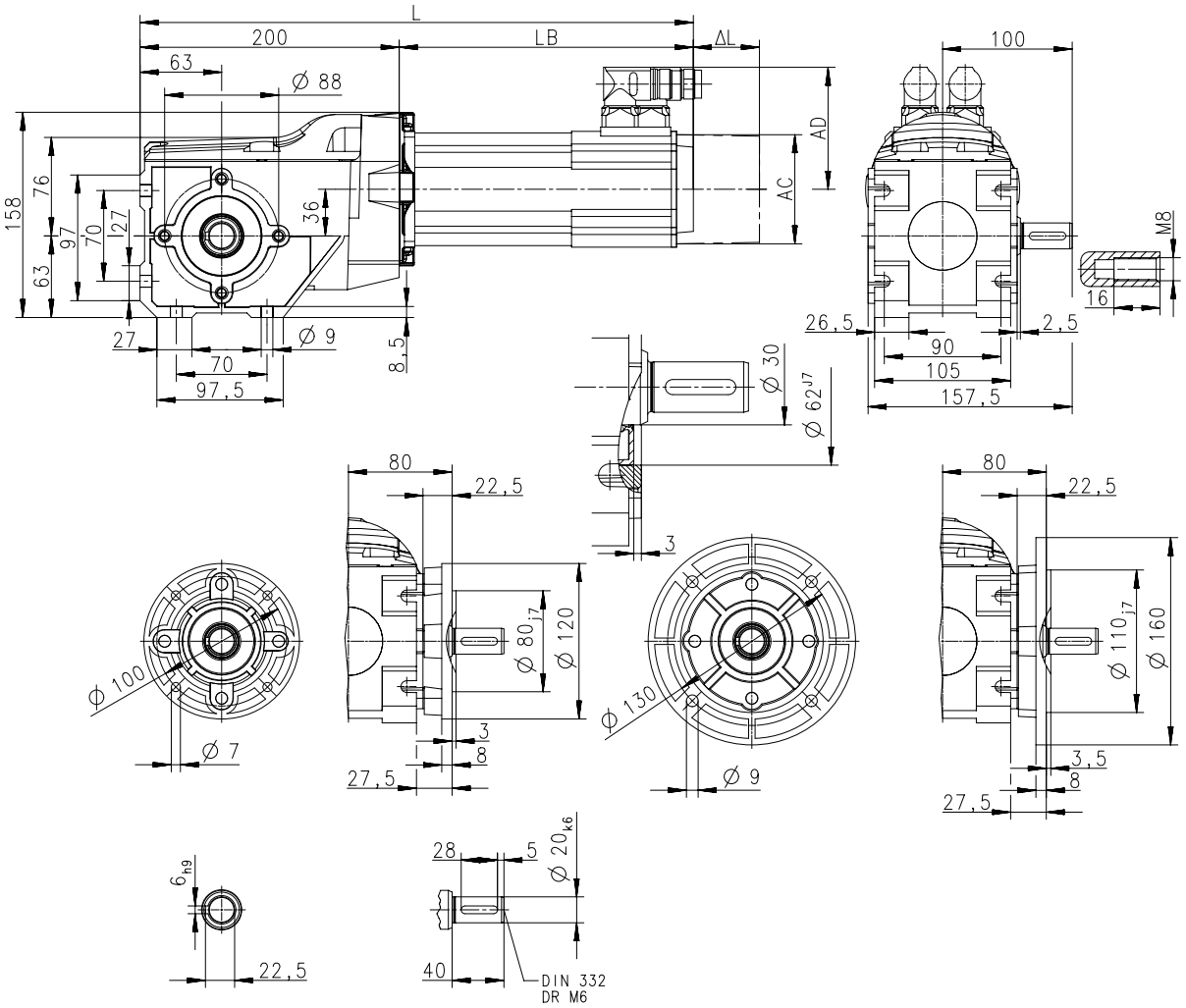

Product			MCS					
			06C41	06F41	06I41	09D41	09F38	09H41
Dimensions								
Total length	**L**	**[mm]**	331	361	391	384	404	424
Motor length	**LB**	**[mm]**	131.4	161.4	191.4	183.9	203.9	223.9
Length of motor options	**Δ L**	**[mm]**	100			71		
Motor diameter	**AC**	**[mm]**	86			89		
Distance motor/connection	**AD**	**[mm]**	77			89.7		



Dimensions, self-ventilated motors

g500-B110

Dimensions with shrink disc

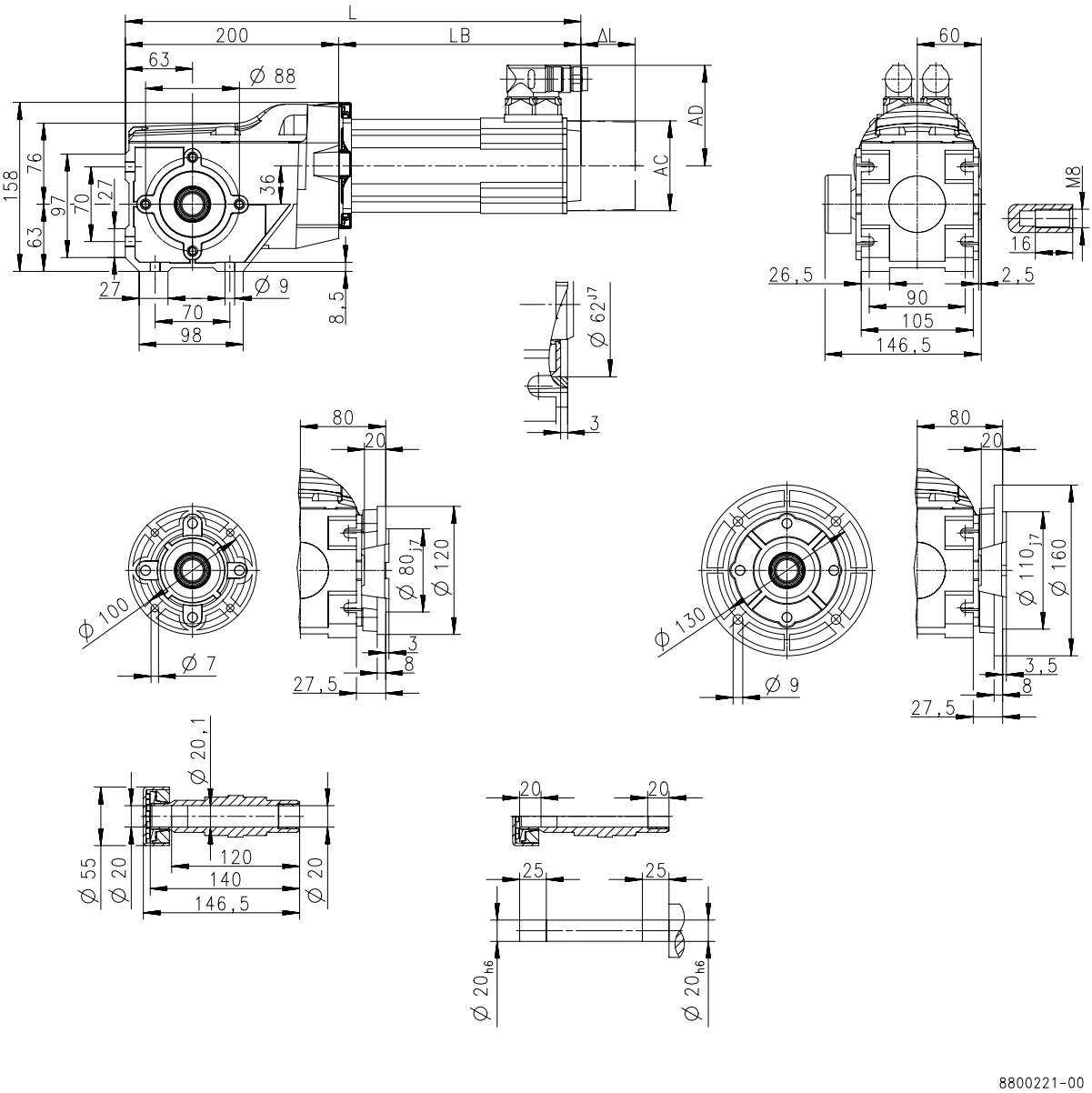

Product			MCS					
			06C41	06F41	06I41	09D41	09F38	09H41
Dimensions								
Total length	**L**	**[mm]**	331	361	391	384	404	424
Motor length	**LB**	**[mm]**	131.4	161.4	191.4	183.9	203.9	223.9
Length of motor options	**Δ L**	**[mm]**	100			71		
Motor diameter	**AC**	**[mm]**	86			89		
Distance motor/connection	**AD**	**[mm]**	77			89.7		



Dimensions, self-ventilated motors

g500-B240

Dimensions with hollow shaft

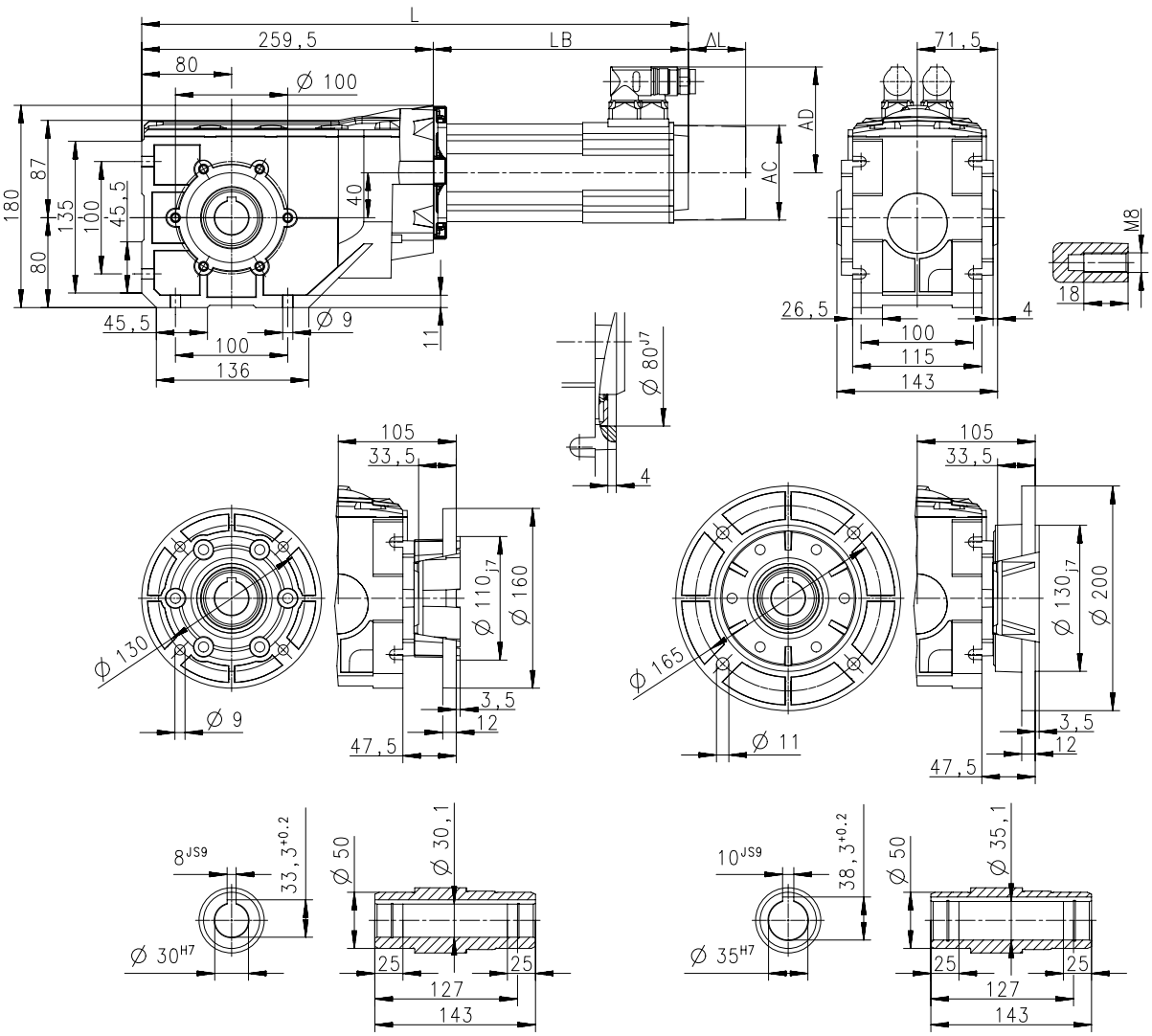

Product			MCS					
			06C41	06F41	06I41	09D41	09F38	09H41
Dimensions								
Total length	**L**	**[mm]**	391	421	451	443	463	483
Motor length	**LB**	**[mm]**	131.4	161.4	191.4	183.9	203.9	223.9
Length of motor options	**Δ L**	**[mm]**	100			71		
Motor diameter	**AC**	**[mm]**	86			89		
Distance motor/connection	**AD**	**[mm]**	77			89.7		



Dimensions, self-ventilated motors

g500-B240

Dimensions with hollow shaft

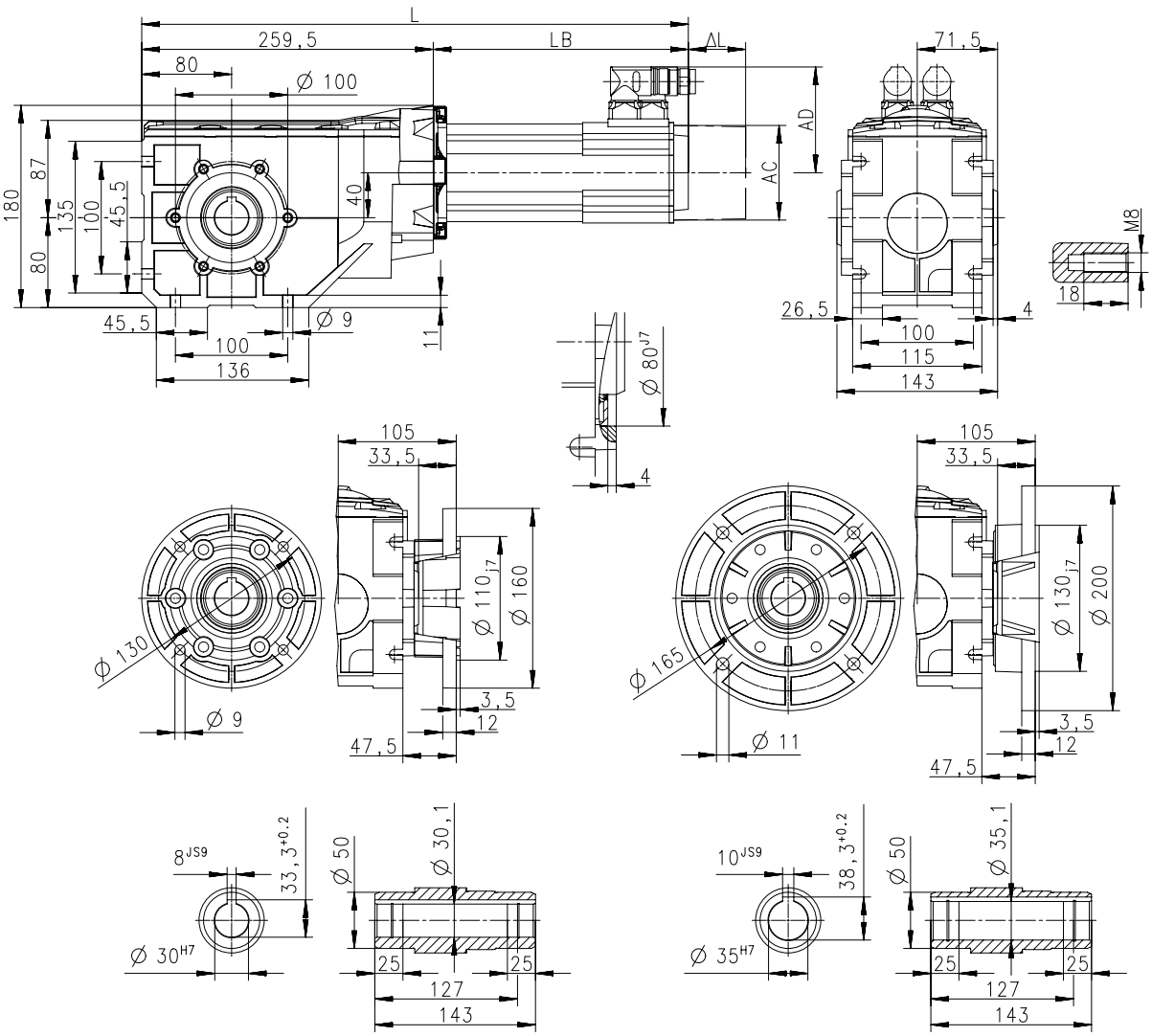

Product			MCS						
			09L41	12D20	12D41	12H15	12H30	12H35	12L20
Dimensions									
Total length	**L**	**[mm]**	523	460		500			540
Motor length	**LB**	**[mm]**	263.9	200.5		240.5			280.5
Length of motor options	**Δ L**	**[mm]**	71	69					
Motor diameter	**AC**	**[mm]**	89	116					
Distance motor/connection	**AD**	**[mm]**	89.7	105					



Dimensions, self-ventilated motors

g500-B240

Dimensions with solid shaft

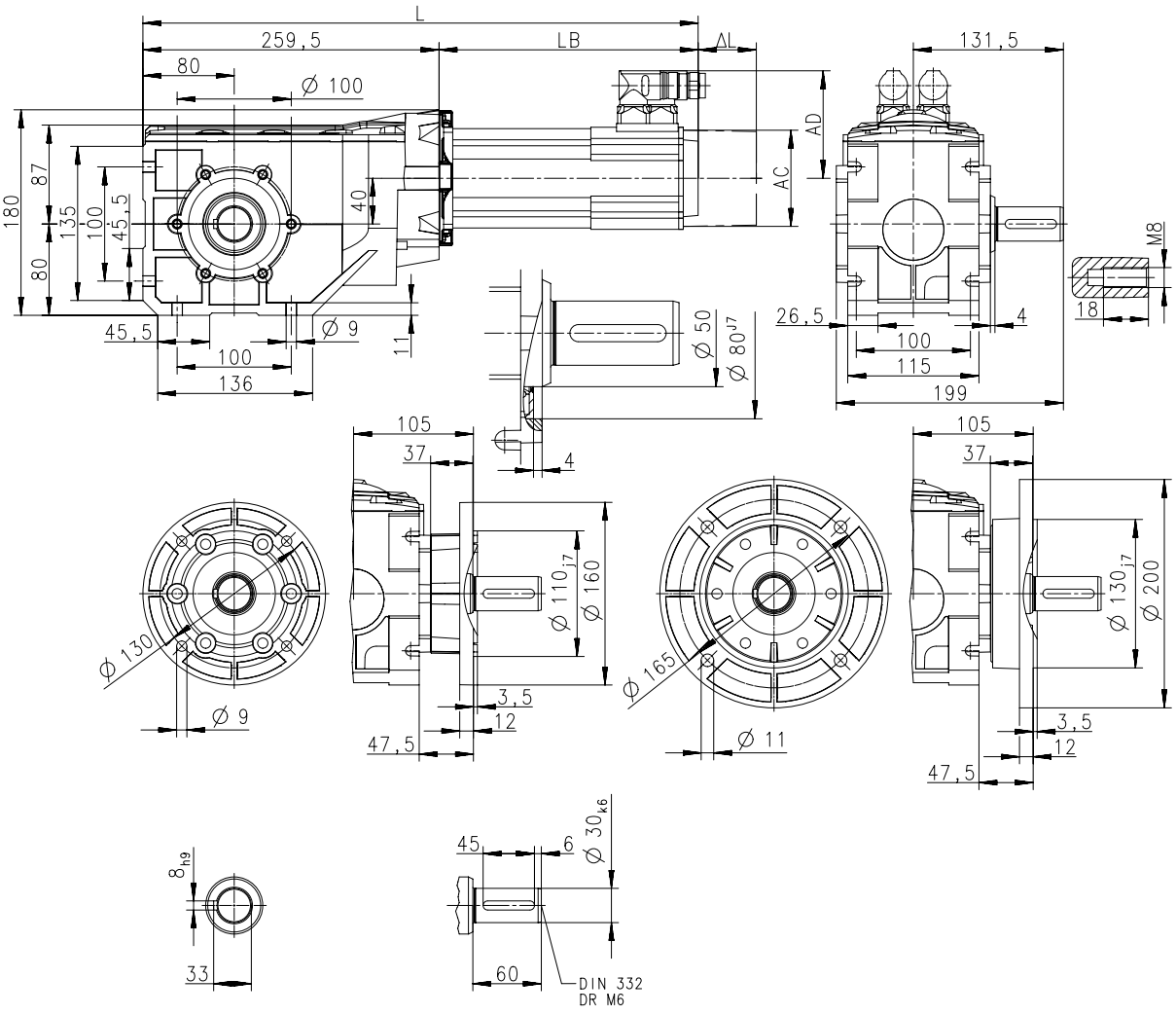

Product			MCS					
			06C41	06F41	06I41	09D41	09F38	09H41
Dimensions								
Total length	**L**	**[mm]**	391	421	451	443	463	483
Motor length	**LB**	**[mm]**	131.4	161.4	191.4	183.9	203.9	223.9
Length of motor options	**Δ L**	**[mm]**	100			71		
Motor diameter	**AC**	**[mm]**	86			89		
Distance motor/connection	**AD**	**[mm]**	77			89.7		



Dimensions, self-ventilated motors

g500-B240

Dimensions with solid shaft

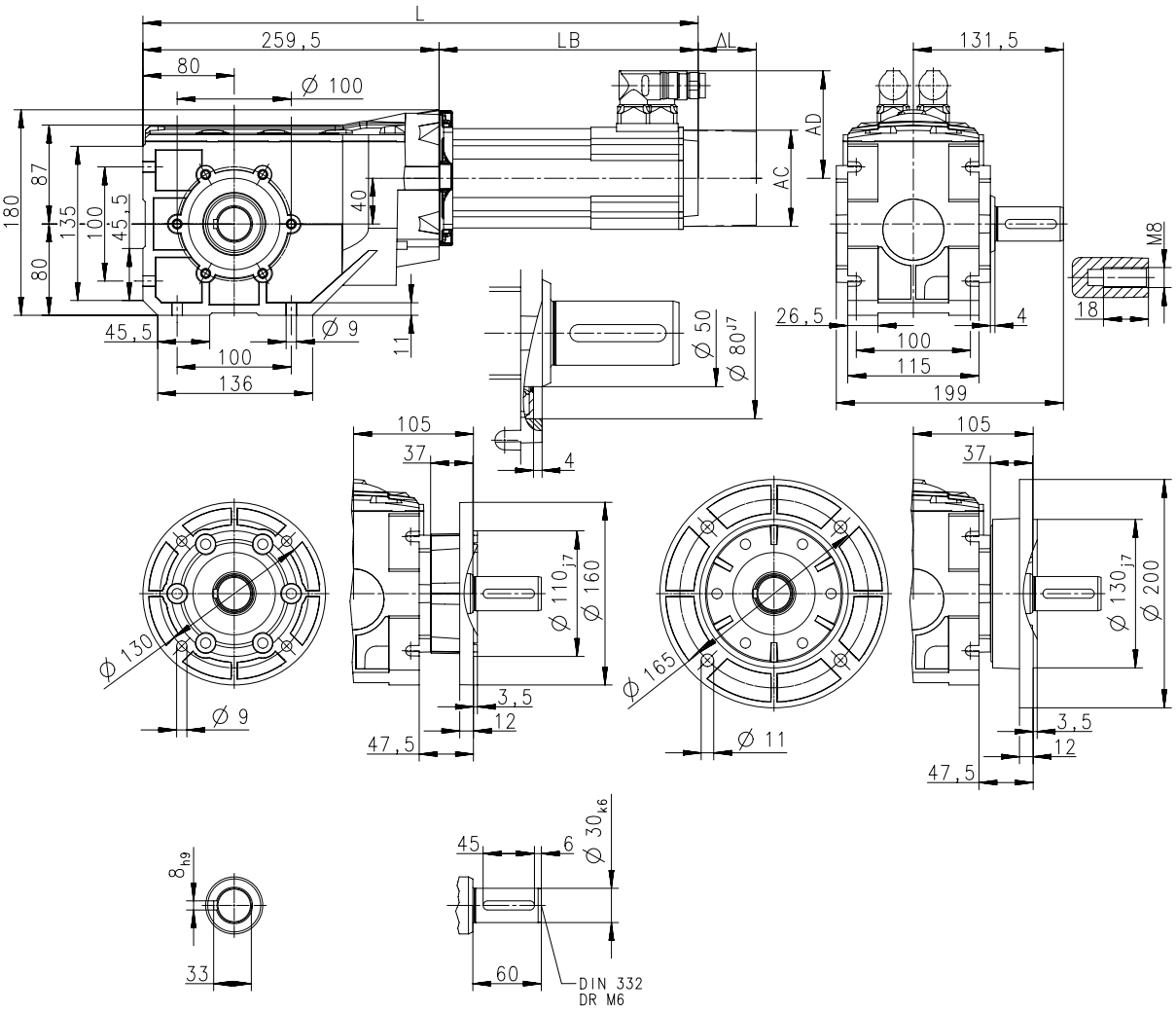

Product			MCS						
			09L41	12D20	12D41	12H15	12H30	12H35	12L20
Dimensions									
Total length	**L**	**[mm]**	523	460		500			540
Motor length	**LB**	**[mm]**	263.9	200.5		240.5			280.5
Length of motor options	**Δ L**	**[mm]**	71	69					
Motor diameter	**AC**	**[mm]**	89	116					
Distance motor/connection	**AD**	**[mm]**	89.7	105					



Dimensions, self-ventilated motors

g500-B240

Dimensions with shrink disc

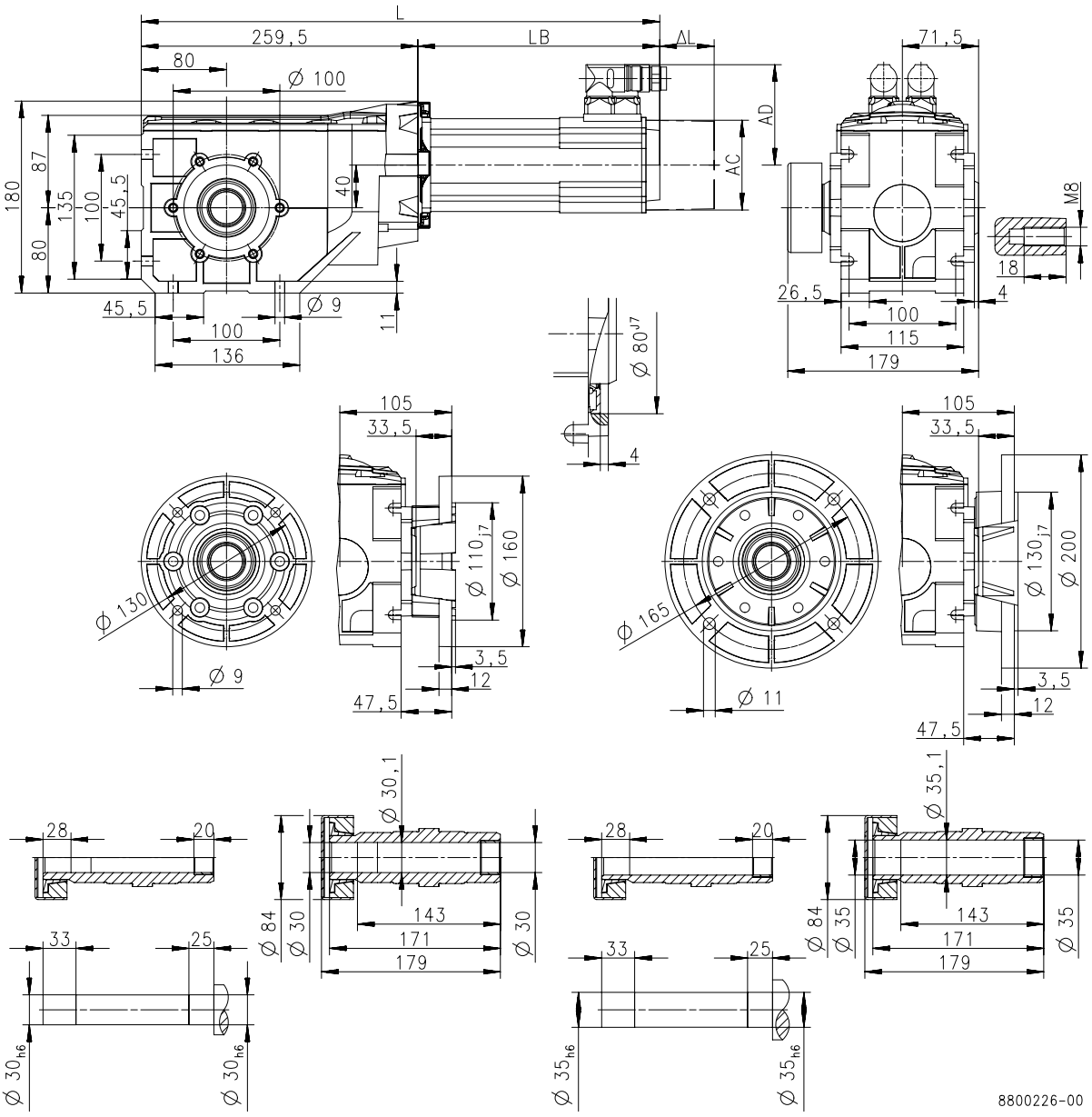

Product			MCS					
			06C41	06F41	06I41	09D41	09F38	09H41
Dimensions								
Total length	**L**	**[mm]**	391	421	451	443	463	483
Motor length	**LB**	**[mm]**	131.4	161.4	191.4	183.9	203.9	223.9
Length of motor options	**Δ L**	**[mm]**	100			71		
Motor diameter	**AC**	**[mm]**	86			89		
Distance motor/connection	**AD**	**[mm]**	77			89.7		



Dimensions, self-ventilated motors

g500-B240

Dimensions with shrink disc

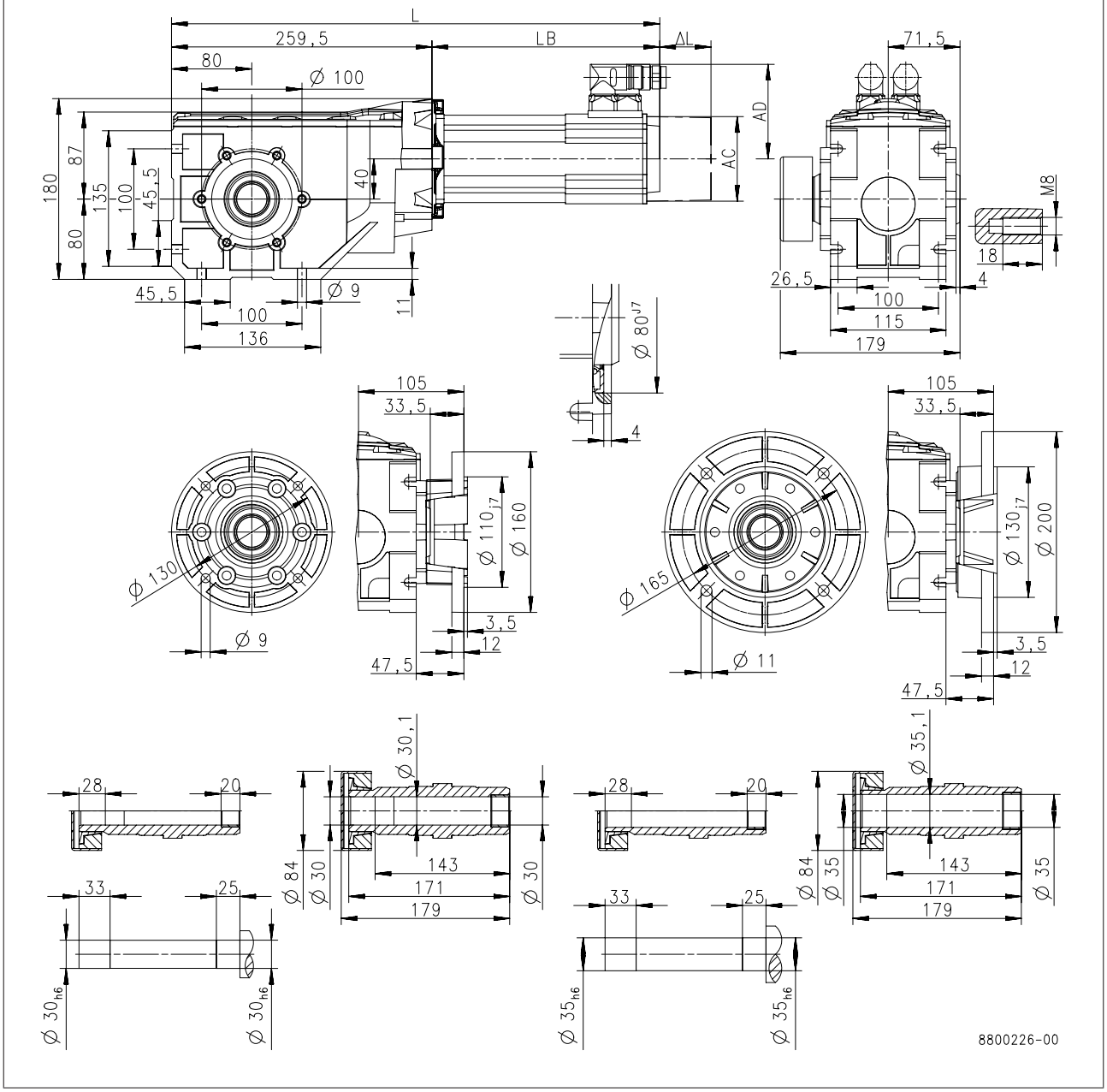

Product			MCS						
			09L41	12D20	12D41	12H15	12H30	12H35	12L20
Dimensions									
Total length	**L**	**[mm]**	523	460		500			540
Motor length	**LB**	**[mm]**	263.9	200.5		240.5			280.5
Length of motor options	**Δ L**	**[mm]**	71	69					
Motor diameter	**AC**	**[mm]**	89	116					
Distance motor/connection	**AD**	**[mm]**	89.7	105					



Dimensions, self-ventilated motors

g500-B450

Dimensions with hollow shaft

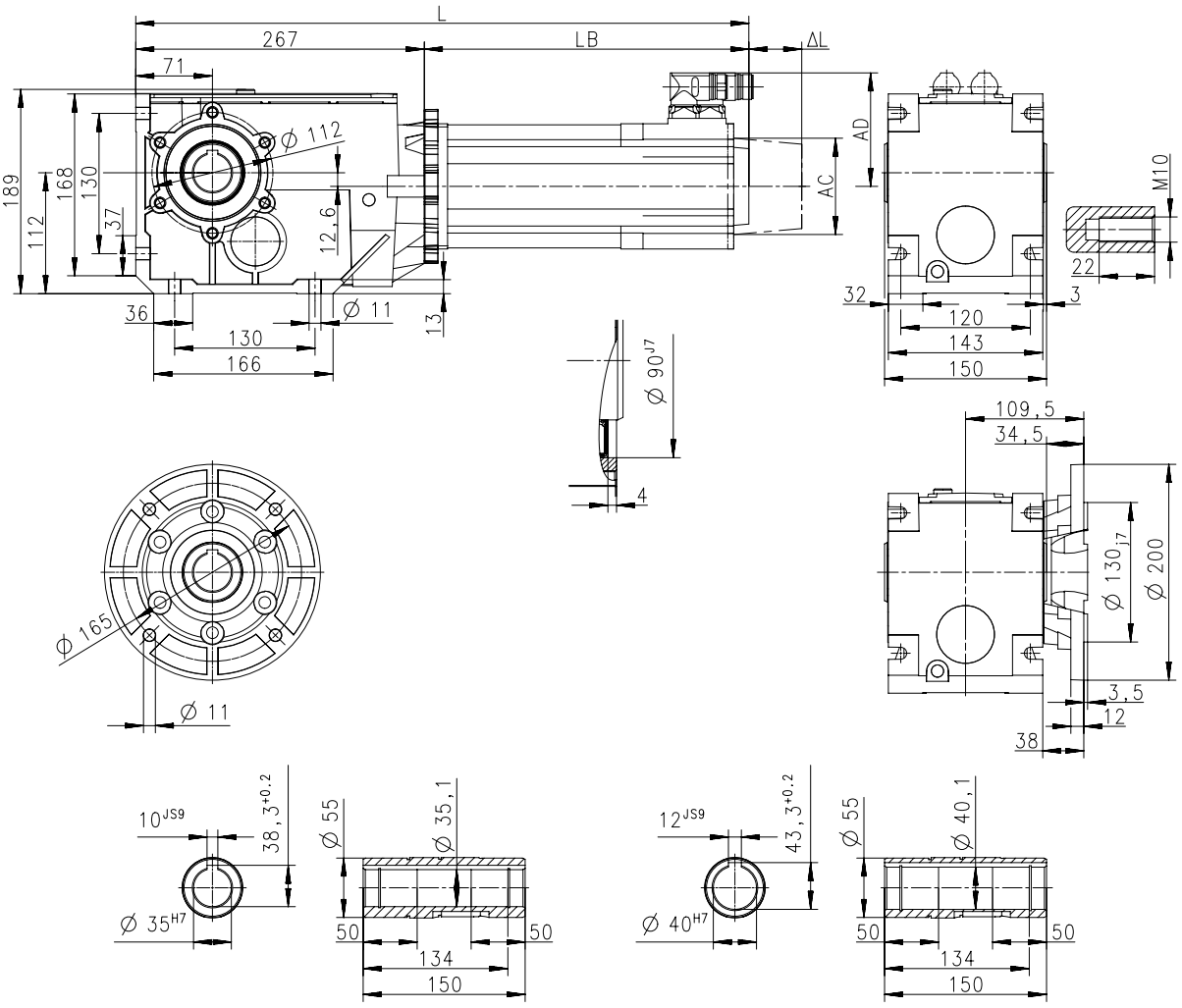

Product			MCS							
			06C41	06F41	06I41	09D41	09F38	09H41	09L41	12D20
Dimensions										
Total length	**L**	**[mm]**	398	428	458	451	471	491	531	468
Motor length	**LB**	**[mm]**	131.4	161.4	191.4	183.9	203.9	223.9	263.9	200.5
Length of motor options	**Δ L**	**[mm]**	100			71				69
Motor diameter	**AC**	**[mm]**	86			89				116
Distance motor/connection	**AD**	**[mm]**	77			89.7				105



Dimensions, self-ventilated motors

g500-B450

Dimensions with hollow shaft

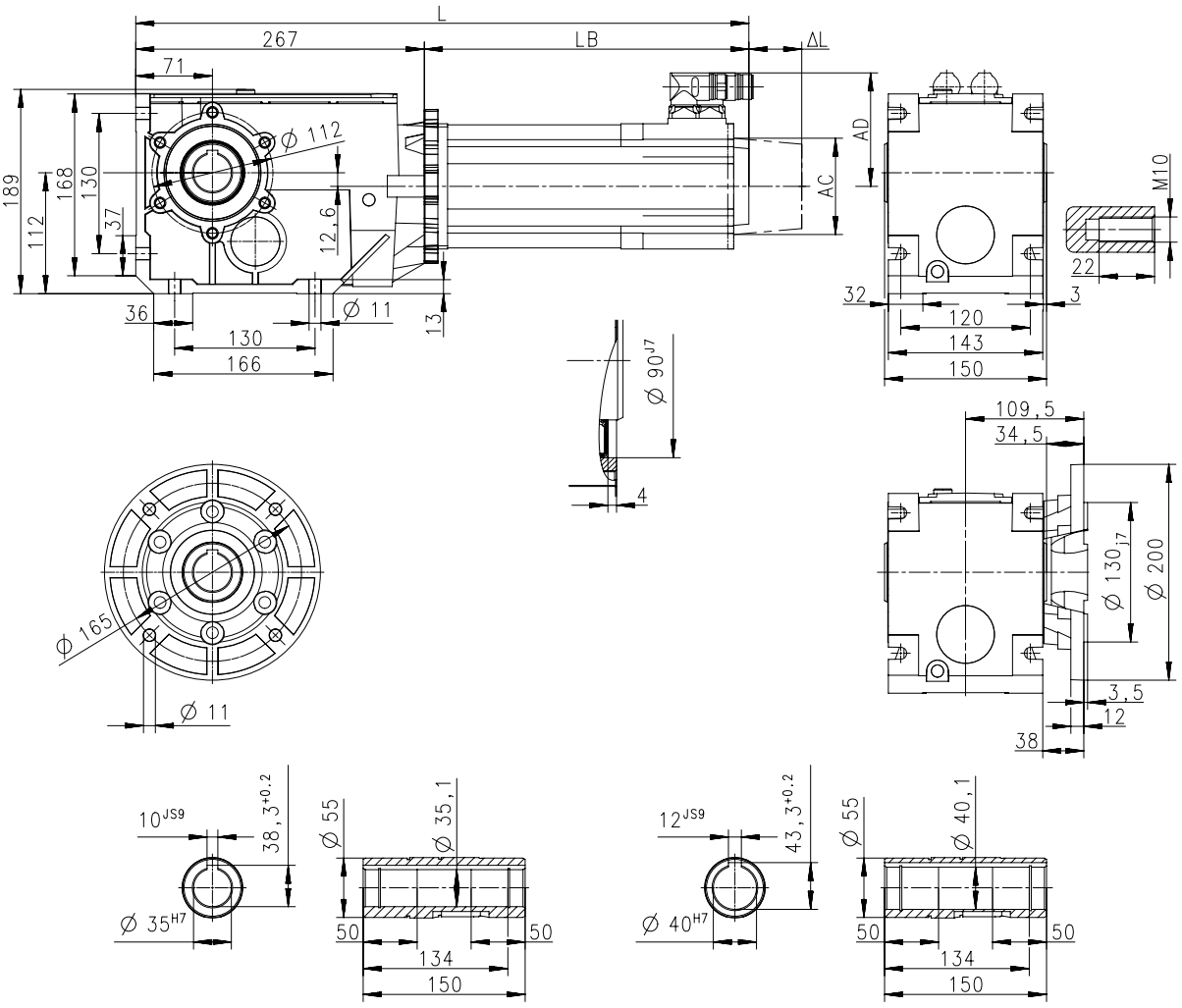

Product			MCS								
			12D41	12H15	12H30	12H35	12L20	14D15	14H15	14L15	14P14
Dimensions											
Total length	**L**	**[mm]**	468	508			548	483	523	563	603
Motor length	**LB**	**[mm]**	200.5	240.5			280.5	216	256	296	336
Length of motor options	**Δ L**	**[mm]**	69					78			
Motor diameter	**AC**	**[mm]**	116					143			
Distance motor/connection	**AD**	**[mm]**	105					116.5			



Dimensions, self-ventilated motors

g500-B450

Dimensions with solid shaft

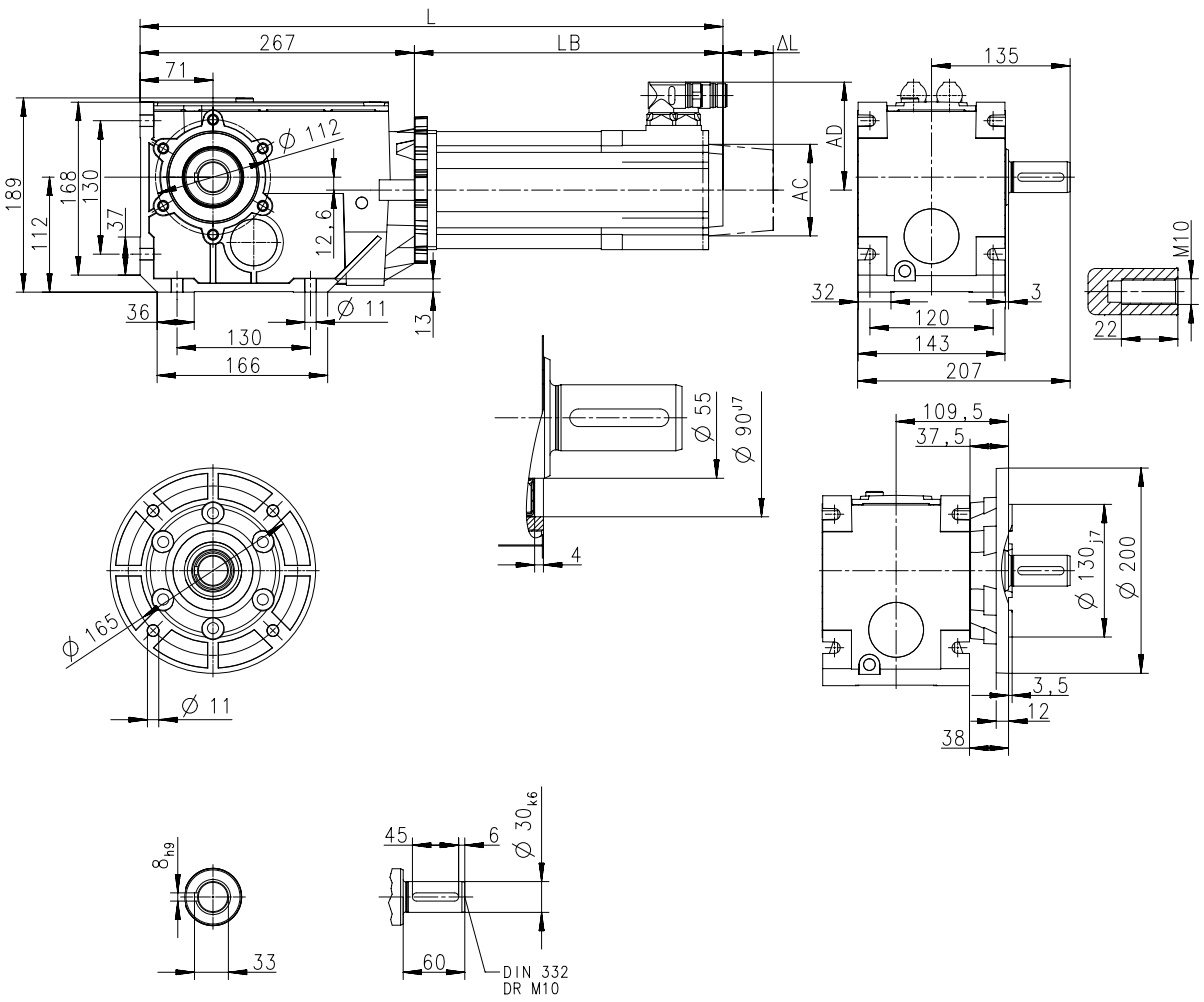

Product			MCS							
			06C41	06F41	06I41	09D41	09F38	09H41	09L41	12D20
Dimensions										
Total length	**L**	**[mm]**	398	428	458	451	471	491	531	468
Motor length	**LB**	**[mm]**	131.4	161.4	191.4	183.9	203.9	223.9	263.9	200.5
Length of motor options	**Δ L**	**[mm]**	100			71				69
Motor diameter	**AC**	**[mm]**	86			89				116
Distance motor/connection	**AD**	**[mm]**	77			89.7				105



Dimensions, self-ventilated motors

g500-B450

Dimensions with solid shaft

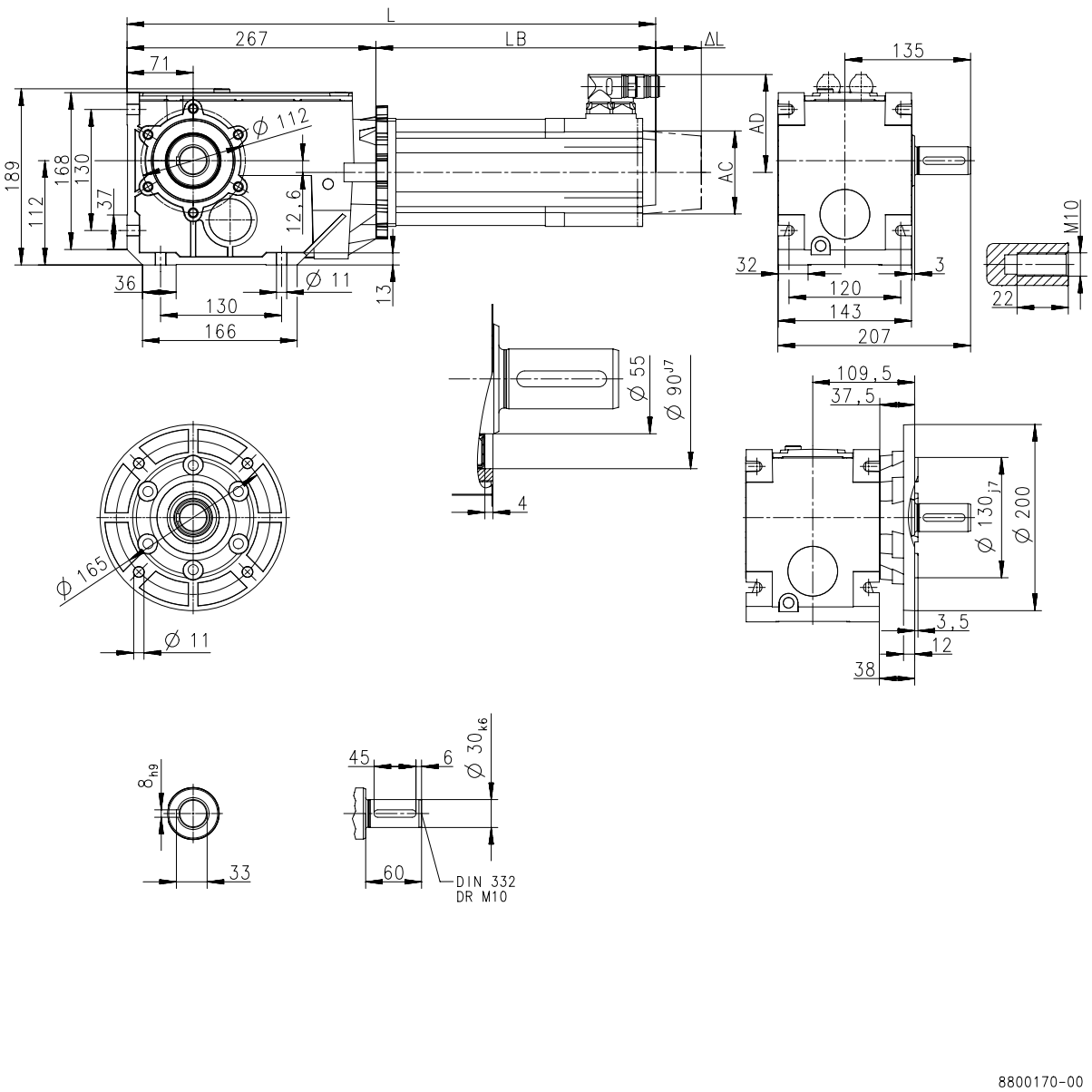

Product			MCS								
			12D41	12H15	12H30	12H35	12L20	14D15	14H15	14L15	14P14
Dimensions											
Total length	**L**	**[mm]**	468	508			548	483	523	563	603
Motor length	**LB**	**[mm]**	200.5	240.5			280.5	216	256	296	336
Length of motor options	**Δ L**	**[mm]**	69					78			
Motor diameter	**AC**	**[mm]**	116					143			
Distance motor/connection	**AD**	**[mm]**	105					116.5			



Dimensions, self-ventilated motors

g500-B450

Dimensions with shrink disc

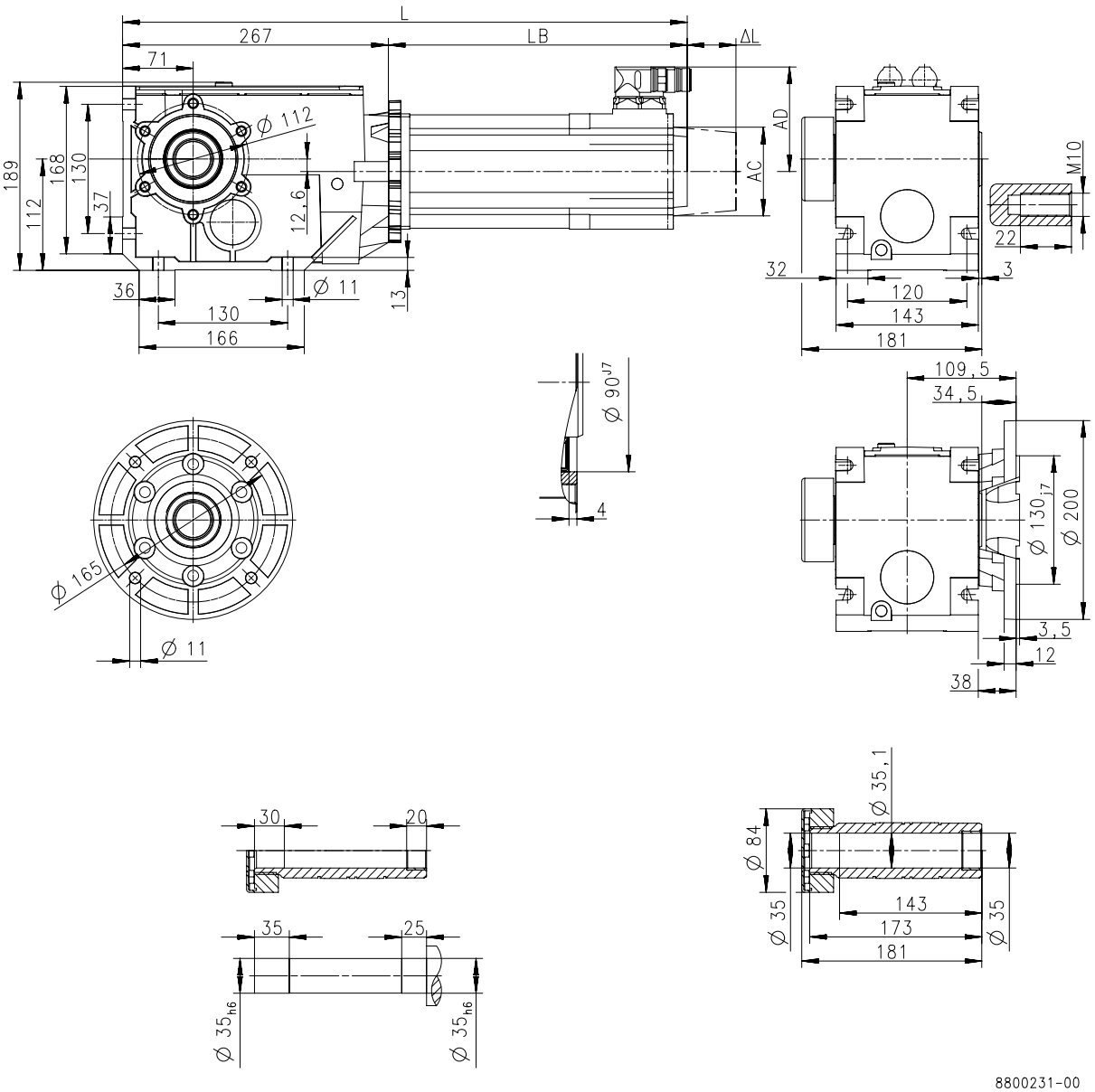

Product			MCS							
			06C41	06F41	06I41	09D41	09F38	09H41	09L41	12D20
Dimensions										
Total length	**L**	**[mm]**	398	428	458	451	471	491	531	468
Motor length	**LB**	**[mm]**	131.4	161.4	191.4	183.9	203.9	223.9	263.9	200.5
Length of motor options	**Δ L**	**[mm]**	100			71				69
Motor diameter	**AC**	**[mm]**	86			89				116
Distance motor/connection	**AD**	**[mm]**	77			89.7				105



Dimensions, self-ventilated motors

g500-B450

Dimensions with shrink disc

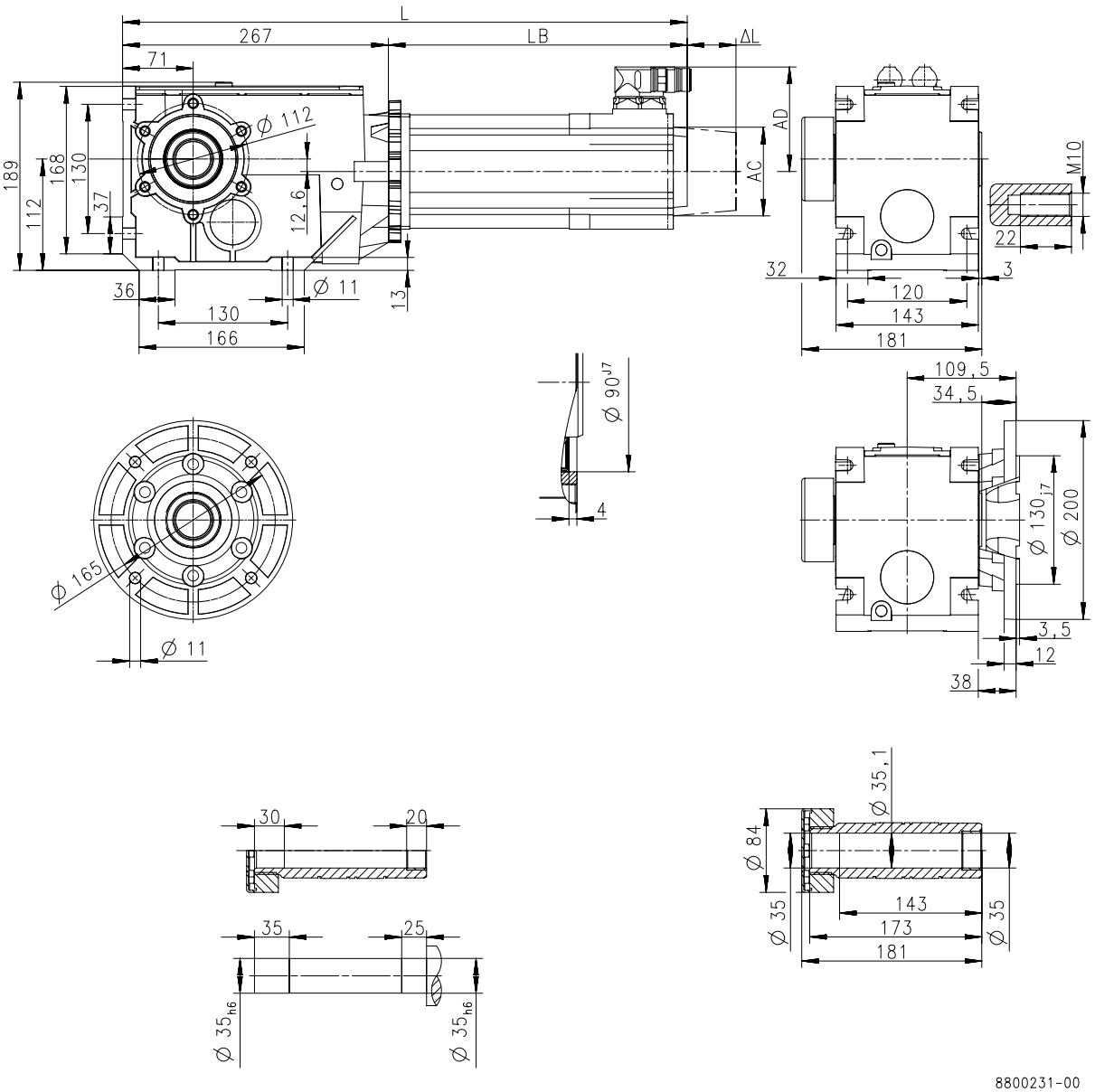

Product			MCS								
			12D41	12H15	12H30	12H35	12L20	14D15	14H15	14L15	14P14
Dimensions											
Total length	**L**	**[mm]**	468	508			548	483	523	563	603
Motor length	**LB**	**[mm]**	200.5	240.5			280.5	216	256	296	336
Length of motor options	**Δ L**	**[mm]**	69					78			
Motor diameter	**AC**	**[mm]**	116					143			
Distance motor/connection	**AD**	**[mm]**	105					116.5			



Weights, self-ventilated motors

2-stage gearboxes

				MCS									
				06C41	06F41	06I41	09D41	09F38	09H41	09L41	12D20 12D41	12H15 12H30 12H35	12L20
g500	-B45	m	[kg]	5.0	5.4	6.1							
	-B110	m	[kg]	6.6	7.0	7.7	9.0	9.9	11				
	-B240	m	[kg]	10	11	12	13	14	15	16	15	18	21

3-stage gearboxes

				MCS						
				06C41 06F41	06I41	09D41	09F38	09H41	09L41	12D20 12D41
g500	-B240	m	[kg]	11						
	-B450	m	[kg]	14	15	16	17	18	20	18

				MCS					
				12H15 12H30 12H35	12L20	14D15	14H15	14L15	14P14
g500	-B450	m	[kg]	21	24	23	28	32	37

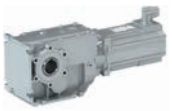

Surface and corrosion protection

For optimum protection of geared motors against ambient conditions, the surface and corrosion protection system (OKS) offers tailor-made solutions.

Various surface coatings combined with other protective measures ensure that the geared motors operate reliably even at high air humidity, in outdoor installations or in the presence of atmospheric impurities. Any colour from the RAL Classic collection can be chosen for the top coat. The geared motors are also available unpainted (no surface and corrosion protection).

Surface and corrosion protection	Applications	Measures
OKS-G (primed)	• Dependent on subsequent top coat applied	• 2K PUR priming coat (grey) • Zinc-coated screws • Rust-free breather elements Optional measures • Stainless steel nameplate
OKS-S (small)	• Standard applications • Internal installation in heated buildings • Air humidity up to 90%	• Surface coating as per corrosivity category C1 (in line with EN 12944-2) • Zinc-coated screws • Rust-free breather elements Optional measures • Stainless steel nameplate
OKS-M (medium)	• Internal installation in non-heated buildings • Covered, protected external installation • Air humidity up to 95%	• Surface coating as per corrosivity category C2 (in line with EN 12944-2) • Zinc-coated screws • Rust-free breather elements Optional measures • Stainless steel shaft • Stainless steel nameplate • Rust-free shrink disc (on request)
OKS-L (large)	• External installation • Air humidity above 95% • Chemical industry plants • Food industry	• Surface coating as per corrosivity category C3 (in line with EN 12944-2) • Blower cover and B end shield additionally primed • Cable glands with gaskets • Corrosion-resistant brake with cover ring, stainless friction plate, and chrome-plated armature plate (on request) • All screws/screw plugs zinc-coated • Stainless breather elements • Threaded holes that are not used are closed by means of plastic plugs Optional measures • Sealed recesses on motor (on request) • Stainless steel shaft • Stainless steel nameplate • Rust-free shrink disc (on request) • Additional priming coat on cast iron fan • Oil expansion tank and torque plates painted separately and supplied loose



Surface and corrosion protection

Structure of surface coating

Surface and corrosion protection	Corrosivity category	Surface coating	Colour
	DIN EN ISO 12944-2	Structure	
Without OKS(uncoated)		Dipping primed gearbox	
OKS-G (primed)		Dipping primed gearbox 2K PUR priming coat	
OKS-S (small)	C1	Dipping primed gearbox 2K-PUR top coat	Standard: RAL 7012 Optional: RAL Classic
OKS-M (medium)	C2	Dipping primed gearbox 2K PUR priming coat 2K-PUR top coat	
OKS-L (large)	C3		



g500-B bevel gearboxes

45 to 450 Nm

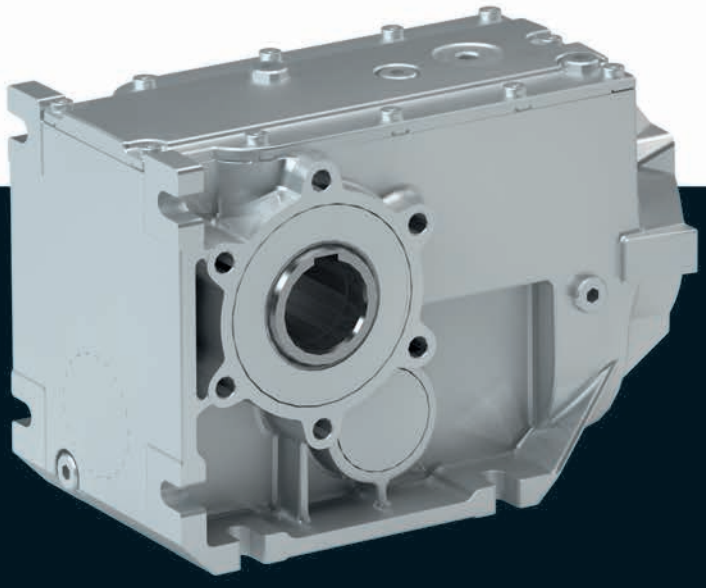

g500-B bevel gearbox

Contents

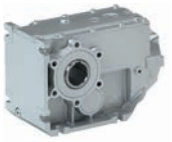

General information	List of abbreviations	6.7 - 5
	Product information	6.7 - 6
	Equipment	6.7 - 7
	The gearbox kit	6.7 - 8
	Functions and features	6.7 - 10
	Lubricants	6.7 - 11
	Ventilation	6.7 - 12
Technical data	Permissible radial and axial forces at output	6.7 - 15
	Moments of inertia	6.7 - 17
	Additional weights for gearboxes	6.7 - 19
Accessories	Torque plate	6.7 - 21
	Shaft cover	6.7 - 26

Contents

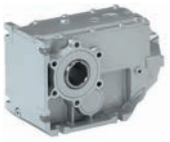

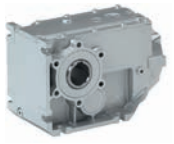

List of abbreviations

$F_{ax,max}$	[N]	Max. axial force
$F_{rad,max}$	[N]	Max. radial force
i		Ratio
J	[kgcm²]	Moment of inertia
m	[kg]	Mass

g500-B bevel gearbox

General information

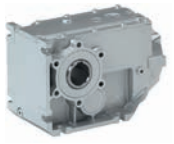

Product information

The efficient bevel gearboxes feature high reliable radial forces, closely stepped gear reductions and a low backlash. They are available in 2-pole and 3-pole design with a torque up to 450 Nm and a ratio of up to i= 360.

Versions

- High-efficient right-angle gearbox in a compact design for space-saving installation
- Standardised shaft and flange dimensions for an easy machine integration
- Low backlash and high torsional stiffness provide for exact results in positioning applications

The product name

Gearbox type	Product range		Design	Rated torque [Nm]	Product
Bevel gearbox	g500	-	B	45	g500-B45
				110	g500-B110
				240	g500-B240
				450	g500-B450

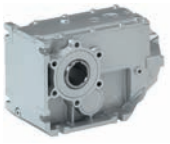

Equipment

Overview

The equipment includes all the options available as standard and all the built-on accessories of the product.

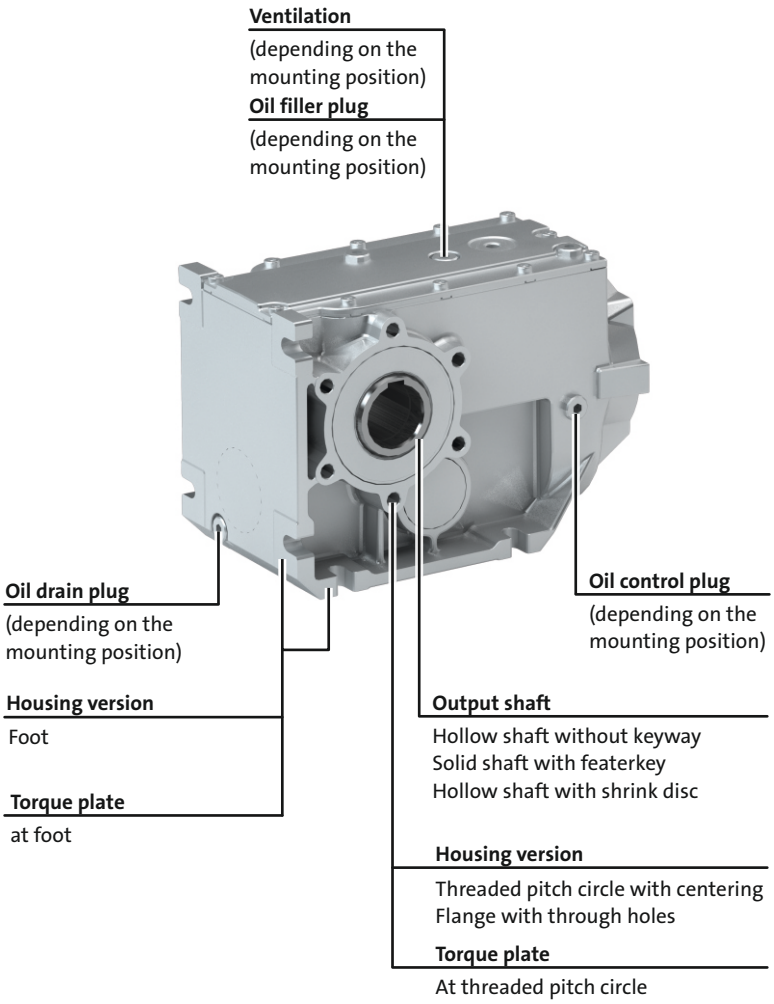

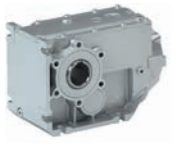

The gearbox kit

Gearbox details

Product	g500-B45	g500-B110	g500-B240	g500-B450
Driven shaft				
Solid shaft without keyway [mm]				
Solid shaft with featherkey [mm]	20x40		30x60	
Hollow shaft with keyway [mm]	18/20	20/25	30/35	35/40
Hollow shaft with shrink disc [mm]	20		30/35	35
Design	Standard stainless steel			
Gasket	Standard FPM (Viton)			
Bearing	Standard			
Fitting grease	Not enclosed Enclosed			
Housing				
Housing version	With foot With foot and centering			
Output flange				
flange diameter [mm]	110/120	120/160	160/200	200
Lubricant				
Type	CLP 460 [1)] CLP HC 320 CLP HC 220 CLP HC 220 USDA H1			
Oil-level inspection	Without inspection			Without inspection With inspection
Breather element	Without			Standard mounting position: Mounted Combined mounting position: loosely enclosed
Backlash				
Backlash	Standard			
Accessories				
Torque plate	Rubber buffers At threaded pitch circle	At threaded pitch circle	At threaded pitch circle At foot	At foot
Shaft cover	Hollow shaft Shrink disc: Rotating cover Shrink disc: Fixed cover			

6.7

[1)] Not suitable for geared servo motors.

► Further information and installation feasibilities can be found in the Gearboxes chapter.



The gearbox kit

Gearbox details

Solid shaft



Foot mounting
without centring



Foot mounting
With centering



Flange with through holes

Hollow shaft



Foot mounting
without centring



Foot mounting
With centering



Flange with through holes

Hollow shaft with shrink disc



Foot mounting
without centring



Foot mounting
With centering

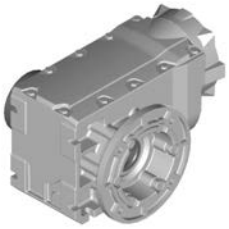

Flange with through holes

Accessories



2nd output shaft end



Torque plate
at foot



Torque plate
at threaded pitch circle

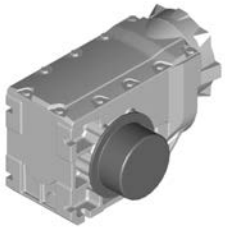

Cover
Hollow shaft/shrink disc

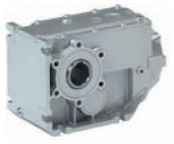

Functions and features

Product	g500-B45	g500-B110	g500-B240	g500-B450
Housing				
Design	Cuboid			
Material	Aluminium			
Solid shaft				
Design	with keyway to DIN 6885			
Tolerance	Shaft diameter ≤ 50 mm: k6 Shaft diameter > 50 mm: m6			
Material	Tempered steel C45 Nirosta X46Cr13			
Hollow shaft				
Design	With keyway Without keyway (for shrink disc)			
Tolerance	Bore H7			
Material	Tempered steel C45 Nirosta X46Cr13			
Toothed parts				
Design	Ground tooth flanks Optimised tooth flank geometry			
Material	Case-hardened steel			
Shaft-hub joint				
	1st and 2nd step: Force-fit 3rd step: positive-fit			
Shaft sealing rings				
Design	With dust lip			
Material	NB / FP			
Bearing				
Design	Ball bearing / tapered-roller bearing depending on size and design			
Lubricants				
	Standard: mineral oil Optional: synthetic oil [1]			
Quantities	Corresponding to mounting position (see nameplate)			
Mechanical efficiency				
2-stage gearboxes [$\eta_{c=1}$]	0.96			
3-stage gearboxes [$\eta_{c=1}$]			0.95	

[1] Standard for geared servo motors.

Direction of rotation

2-stage gearboxes B45 ... B240 3-stage gearbox B450	3-stage gearbox B240
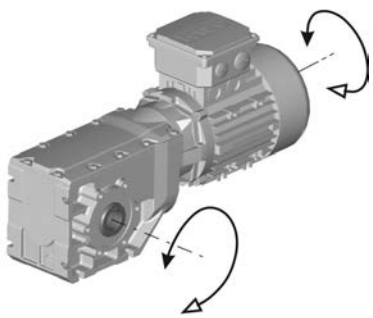	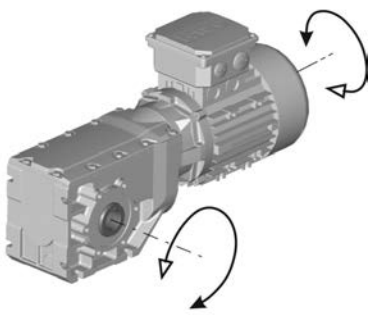

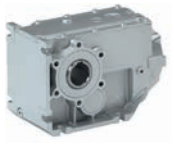

Lubricants

Lenze gearboxes and geared motors are ready for operation on delivery and are filled with lubricants specific to both the drive and the design. The mounting position and design specified in the order are key factors in choosing the volume of lubricant.

The lubricants listed in the lubricant table are approved for use in Lenze drives.

Lubricant table

Mode	CLP 460	CLP HC 320	CLP HC 220 USDA H1
Ambient temperature [°C]	0 ... +40	-25 ... +50	-20 ... +40
Specification	Mineral based oil with additives	Synthetic-based oil (synthetic hydrocarbon / poly-alpha-olefin oil)	
Changing interval	16000 operating hours not later than after three years (oil temperature 70 to 80 °C)	25000 operating hours not later than after three years (oil temperature 70 to 80 °C)	16000 operating hours not later than after three years (oil temperature 70 to 80 °C)
Fuchs	Fuchs Renolin CLP 460	Fuchs Renolin Unisyn CLP 320	bremer & leguil Cassida Fluid GL 220
Klüber	Klüberoil GEM1-460 N	Klübersynth GEM4-320 N	Klüberoil 4 UH1-220 N
Shell	Shell Omala S2 G 460	Shell Omala S4 GX HD 320	

► Please contact your Lenze sales office if you are operating at ambient temperatures in areas up to< -20 °C bzw. > or up to +40°C.

Shaft sealing rings

By default, the gearboxes come with NBR shaft sealing rings at the output end. At high speed and unfavourable ambient conditions as high temperature, reduced circulation of air etc., Lenze recommends the use of Viton shaft sealing rings.

Please consider this in your order.



Ventilation

Non-ventilated gearboxes

No ventilation is required for gearboxes g500-B45 to B240.

Ventilated gearboxes

The g500-B450 gearbox is supplied with a breather element as standard.

Gearboxes in combined mounting position

To reduce the number of different versions, the gearboxes can also be ordered with combined mounting positions.
Depending on the gearbox in question, the following combinations are available:
- g500-B45 in combined mounting position ABCDEF
- g500-B110 ... B450 in combined mounting position AEF

The breather elements are supplied loose.

Ventilation

g500-B240

Breather position, oil filling screw and drain plug

► **A ... F** mounting position

Gearbox g500-B240

A	B
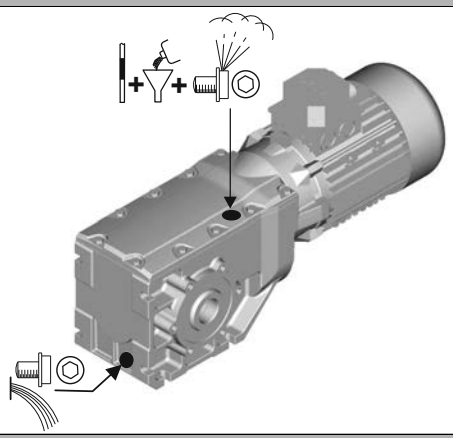	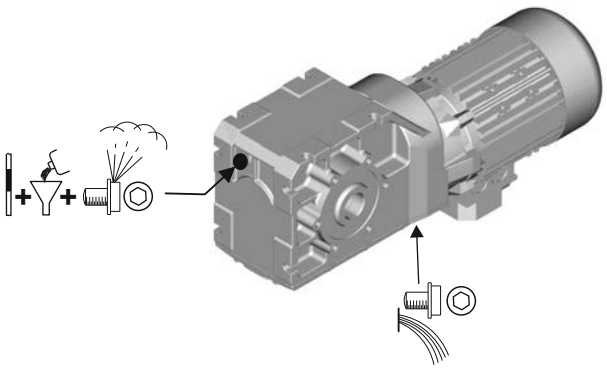
C	**D**
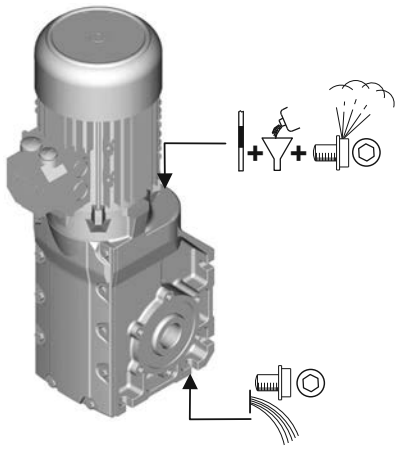	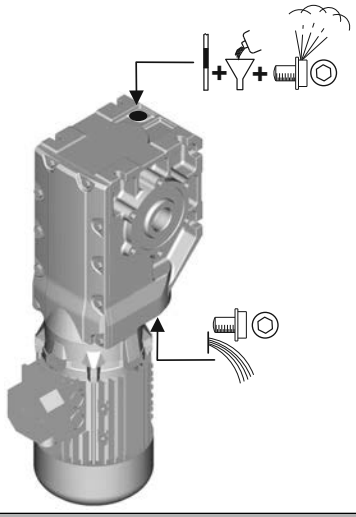
E	**F**
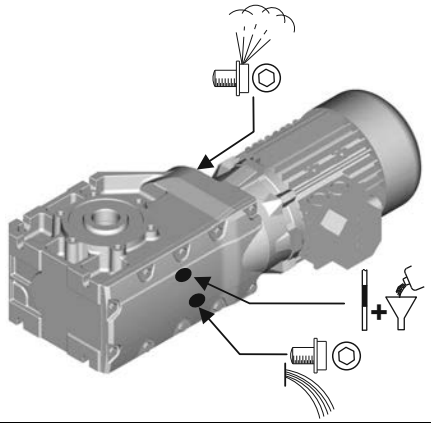	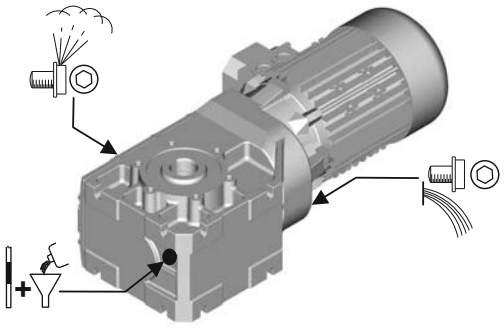

	Filler		Drain
	Breather element		Check

The shown oil bores are optional for gearbox size g500-B240!



7 Maintenance

Ventilation Maintenance operations

g500-B450

► **A ... F** mounting position

Gearbox g500-B450

A	B
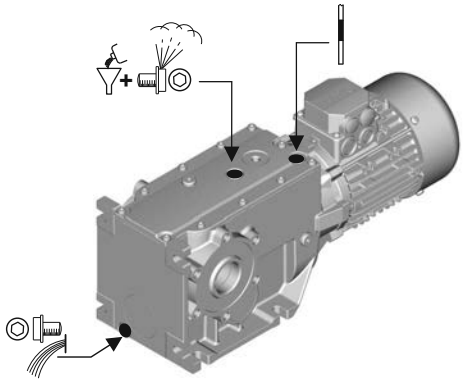	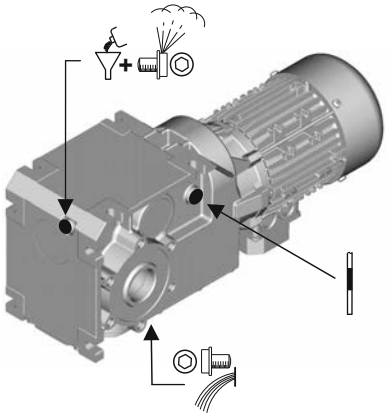
C	**D**
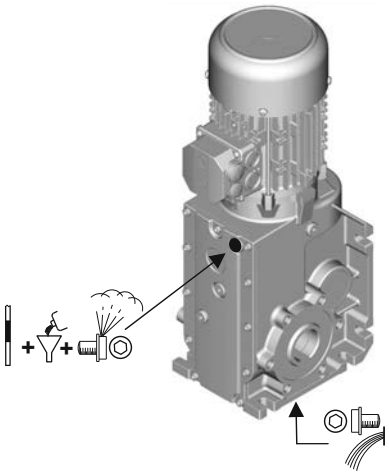	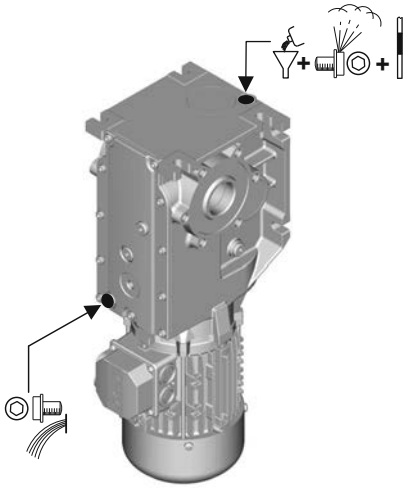
E	**F**
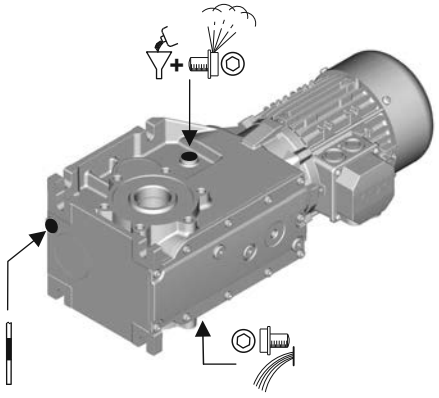	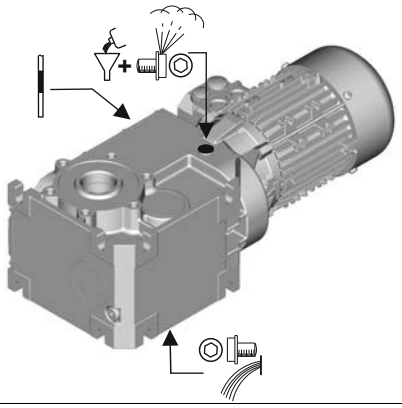

	Filler		Drain
	Breather element		Check

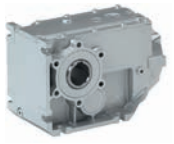

Permissible radial and axial forces at output

Permissible radial force

$F_{rad,perm} = f_w \times F_{rad,max}$

► If F_{rad} **and** $F_{ax} \neq 0$, please contact Lenze.

Permissible axial force

If there is no radial force, the maximum permissible axial force is 50 % of the table value $F_{rad,max}$

Application of forces

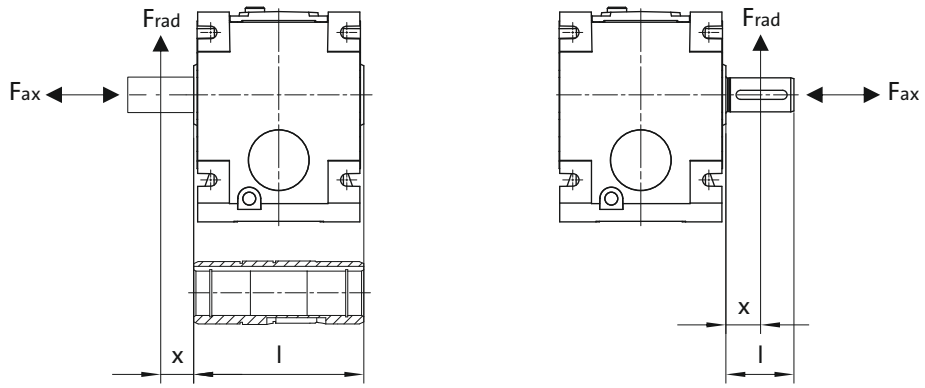

Additional load factor f_w at output shaft

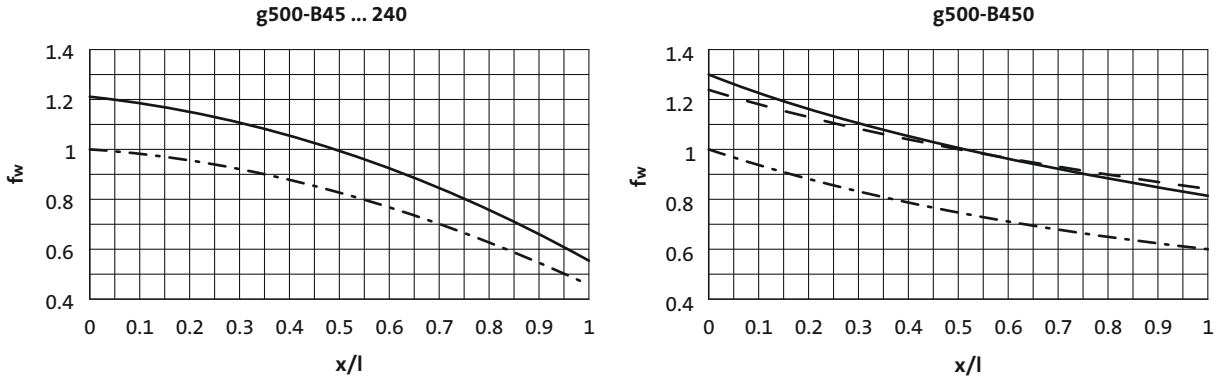

——— Solid shaft
— — — Solid shaft with flange
— · — Hollow shaft

6.7

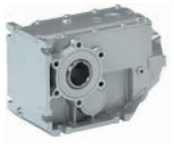

Permissible radial and axial forces at output

The values given in the table refer to the center shaft end force application point and are minimum values calculated according to the most unfavourable conditions (force application angle, mounting position, direction of rotation). The values were calculated for the motor/gearbox combination with a load capacity of c= 1.3 and an input speed of 1400 rpm.

- ► If the torque is transmitted via the flange face, max 50 % of the radial force $F_{rad,max}$ are permissible.
- ► Neither radial nor axial forces are permissible for the hollow shaft with shrink disc.

In case of different operating conditions, considerably higher forces can be transmitted. Please contact Lenze.

Product	n_2 [r/min]									
	1000	630	400	250	160	100	63	40	25	≤16

	Max. radial force, Hollow shaft									
	$F_{rad,max}$	$F_{rad,max}$	$F_{rad,max}$	$F_{rad,max}$	$F_{rad,max}$	$F_{rad,max}$	$F_{rad,max}$	$F_{rad,max}$	$F_{rad,max}$	$F_{rad,max}$
	[N]	[N]	[N]	[N]	[N]	[N]	[N]	[N]	[N]	[N]
g500-B45	900	1200	2200	2500	2800	3000	3000	3000	3000	3000
g500-B110	1000	2200	2550	3000	3300	3600	3600	3600	3600	3600
g500-B240	1500	2250	3800	4500	5100	6200	7400	7800	7800	7800
g500-B450	3000	3800	5000	5200	5200	5500	7000	9000	9000	9000

	Max. radial force, Solid shaft without flange									
	$F_{rad,max}$	$F_{rad,max}$	$F_{rad,max}$	$F_{rad,max}$	$F_{rad,max}$	$F_{rad,max}$	$F_{rad,max}$	$F_{rad,max}$	$F_{rad,max}$	$F_{rad,max}$
	[N]	[N]	[N]	[N]	[N]	[N]	[N]	[N]	[N]	[N]
g500-B45	900	1200	1800	2100	2400	2800	3000	3000	3000	3000
g500-B110	1000	1800	2100	2500	2700	3000	3000	3000	3000	3000
g500-B240	1500	2350	3000	3600	4500	5000	6000	6500	6500	6500
g500-B450	1800	2800	3600	4200	5100	6000	7200	7800	7800	7800

	Max. radial force, Solid shaft with flange									
	$F_{rad,max}$	$F_{rad,max}$	$F_{rad,max}$	$F_{rad,max}$	$F_{rad,max}$	$F_{rad,max}$	$F_{rad,max}$	$F_{rad,max}$	$F_{rad,max}$	$F_{rad,max}$
	[N]	[N]	[N]	[N]	[N]	[N]	[N]	[N]	[N]	[N]
g500-B45	900	1200	1800	2100	2400	2800	3000	3000	3000	3000
g500-B110	1000	1800	2100	2500	2700	3000	3000	3000	3000	3000
g500-B240	2400	3600	5200	6000	6500	6500	6500	6500	6500	6500
g500-B450	3000	4000	5500	6200	7000	7500	7800	7800	7800	7800

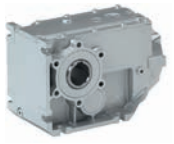

Moments of inertia

- The moments of inertia relate to the drive shaft of the gearbox.
- The total moment of inertia is calculated by adding the values of the gearbox, motor and accessories.

2-stage gearboxes

Product	Ratio	Moment of inertia
	i	J
		[kgcm²]
g500-B45	5.411	0.31
	6.222	0.28
	7.111	0.20
	8.178	0.18
	9.101	0.13
	10.466	0.12
	11.640	0.086
	13.386	0.079
	15.111	0.059
	17.378	0.055
	19.365	0.038
	22.270	0.054
	25.051	0.025
	28.808	0.023
	32.593	0.016
	37.481	0.015
	42.222	0.010
	48.556	0.009
	53.889	0.006
	61.972	0.006
g500-B110	5.185	0.79
	5.963	0.70
	7.111	0.48
	8.178	0.43
	9.101	0.32
	10.466	0.29
	11.449	0.26
	12.698	0.19
	14.603	0.18
	15.556	0.14
	17.889	0.13
	19.556	0.095
	22.489	0.088
	25.185	0.063
	28.963	0.060
	31.919	0.041
	36.707	0.039
	37.400	0.072
	40.000	0.028
	46.000	0.027
	48.167	0.050
	52.698	0.017
	60.603	0.016
	61.045	0.033
	76.500	0.023
	100.786	0.014

Product	Ratio	Moment of inertia
	i	J
		[kgcm²]
g500-B240	3.565	2.97
	4.889	1.74
	6.257	1.15
	6.883	1.67
	7.817	1.51
	9.440	1.05
	10.720	0.97
	12.081	0.73
	13.719	0.68
	15.008	0.59
	16.857	0.45
	19.143	0.42
	20.650	0.34
	23.450	0.32
	26.878	0.21
	30.522	0.20
	33.433	0.15
	37.967	0.15
	43.267	0.096
	49.133	0.092
	52.510	0.070
	59.630	0.067
	67.113	0.045
	76.213	0.043

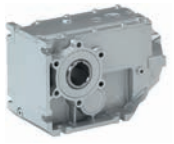

Moments of inertia

3-stage gearboxes

Product	Ratio	Moment of inertia
	i	J
		[kgcm²]
g500-B240	68.459	0.093
	77.741	0.091
	87.563	0.062
	99.437	0.061
	113.673	0.044
	129.087	0.043
	145.674	0.030
	165.426	0.030
	188.442	0.021
	213.994	0.020
	245.178	0.014
	278.422	0.014
	317.617	0.003
	360.683	0.003

Product	Ratio	Moment of inertia
	i	J
		[kgcm²]
g500-B450	5.002	4.36
	6.860	2.48
	9.315	3.21
	10.328	3.06
	12.775	1.87
	14.165	1.79
	16.349	1.23
	17.885	1.05
	19.831	1.01
	22.813	0.70
	25.294	0.68
	27.945	0.51
	30.985	0.49
	36.373	0.31
	40.330	0.30
	45.245	0.22
	50.167	0.21
	56.154	0.47
	62.262	0.47
	68.788	0.36
	76.271	0.36
	89.534	0.22
	99.274	0.22
	111.372	0.16
	123.487	0.16
	144.128	0.10
	159.807	0.099
	174.919	0.073
	193.948	0.072
	223.563	0.046
	247.882	0.046

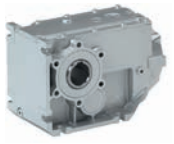

Additional weights for gearboxes

Product			g500-B45	g500-B110	g500-B240	g500-B450
Mass						
Solid shaft	m	[kg]	0.4	0.5	1.4	1.3
Shrink disc	m	[kg]	0.2	0.2	0.7	0.6
Flange	m	[kg]	0.3	0.4	0.7	0.9

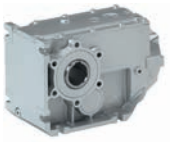

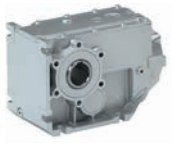

Torque plate

Torque support is usually effected by means of the foot or flange. Another simple possibility is provided by the attachable torque plates. Here, torque support is implemented solely via one point, which, among other things, is suitable for shaft-mounted gearboxes. Supplied rubber buffers provide for mounting with minimum stress and absorb light shocks.
The torque plates are available in two designs, for mounting on the available threaded pitch circle, or for the gearbox foot.

In addition, torque support for the g500-B45 gearbox can be effected via the holding fixture of the housing, which is integrated on both sides, by means of a rubber buffer.
The rubber buffers can be ordered optionally.



Torque plate

Torque plate on threaded pitch circle

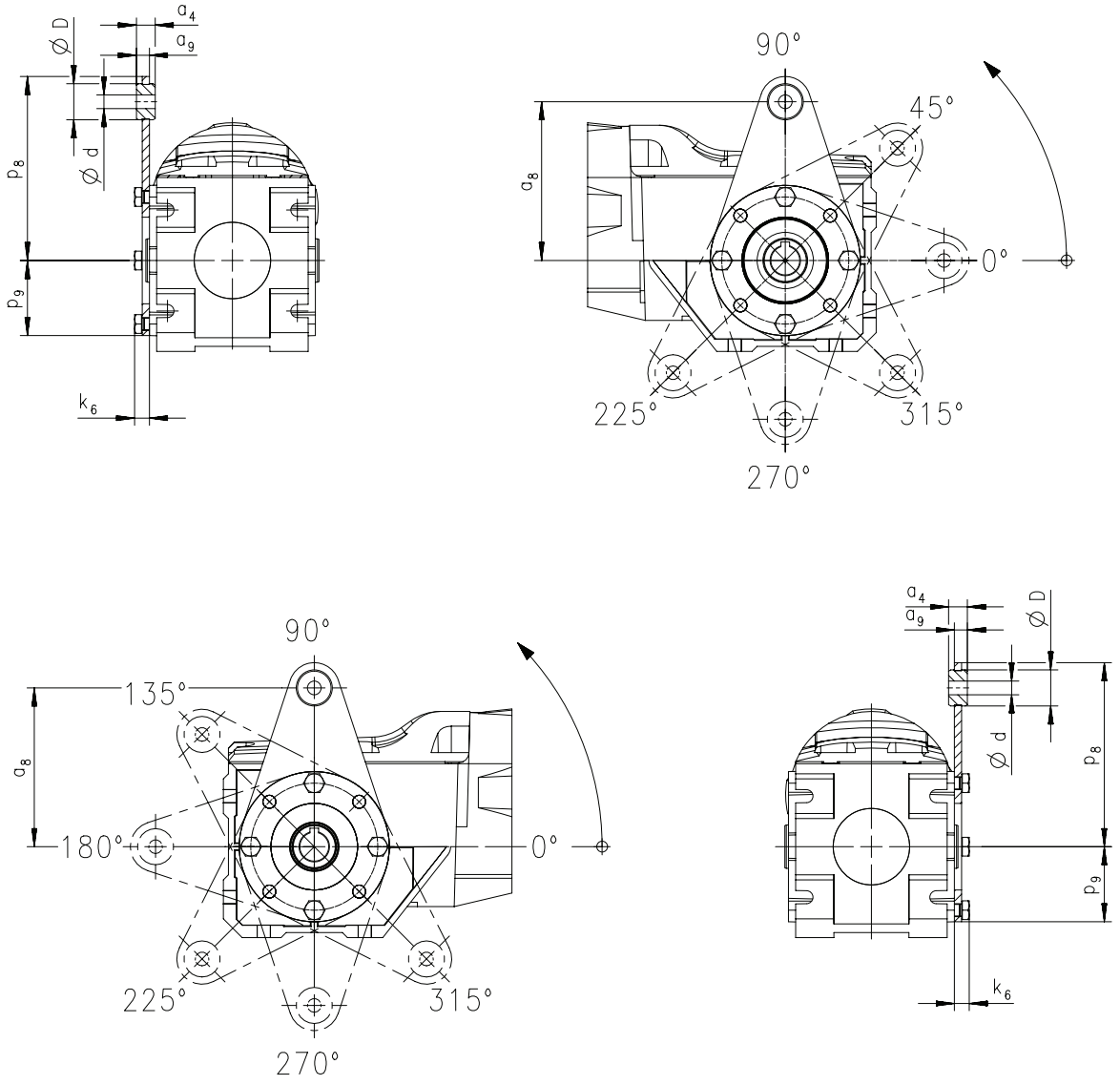

Product	Dimensions								Mass
	a_4	a_8	a_9	d	D	p_8	p_9	k_6	m
	[mm]	[mm]	[mm]	[mm]	[mm]	[mm]	[mm]	[mm]	[kg]
g500-B45	12.0	100	8.0	8.0	20.0	115	42.0	9.0	0.30
g500-B110	13.0	110	9.0	10.0	25.0	128	54.0	11.0	0.50



Torque plate

Torque plate on threaded pitch circle

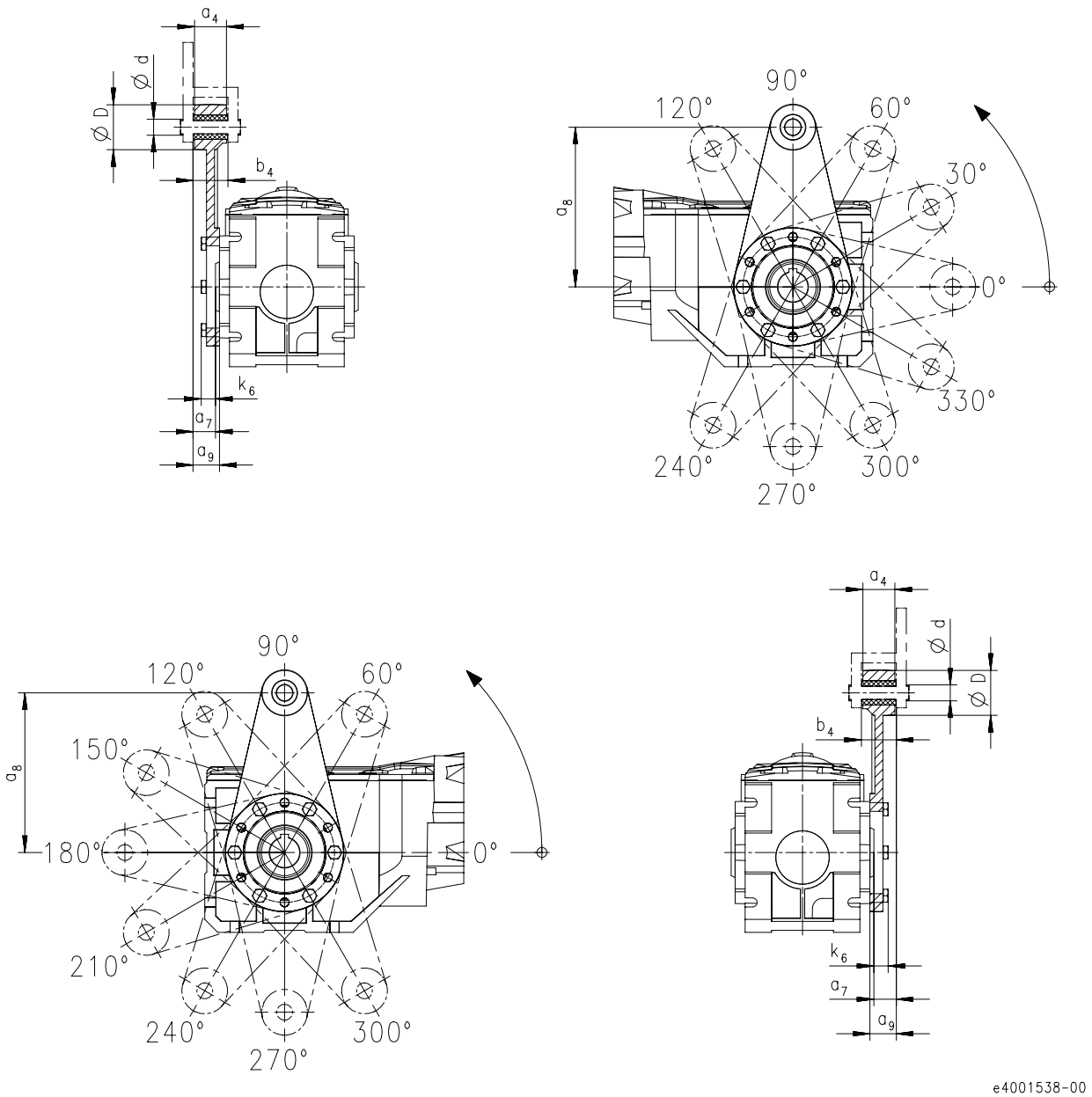

Product	Dimensions								Mass
	a_4	a_7	a_8	a_9	b_4	d	D	k_6	m
	[mm]	[mm]	[mm]	[mm]	[mm]	[mm]	[mm]	[mm]	[kg]
- g500-B240	34.0	23.5	160	27.5	38.5	16.0	45.0	15.0	1.30



Torque plate

Torque plate at housing foot

g500-B240

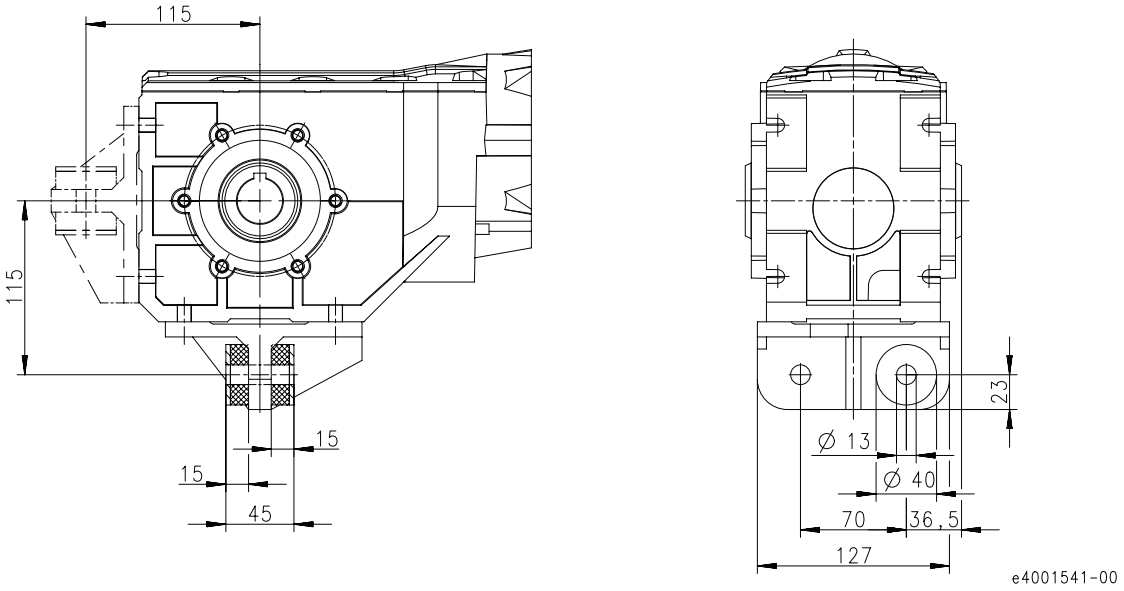

g500-B450

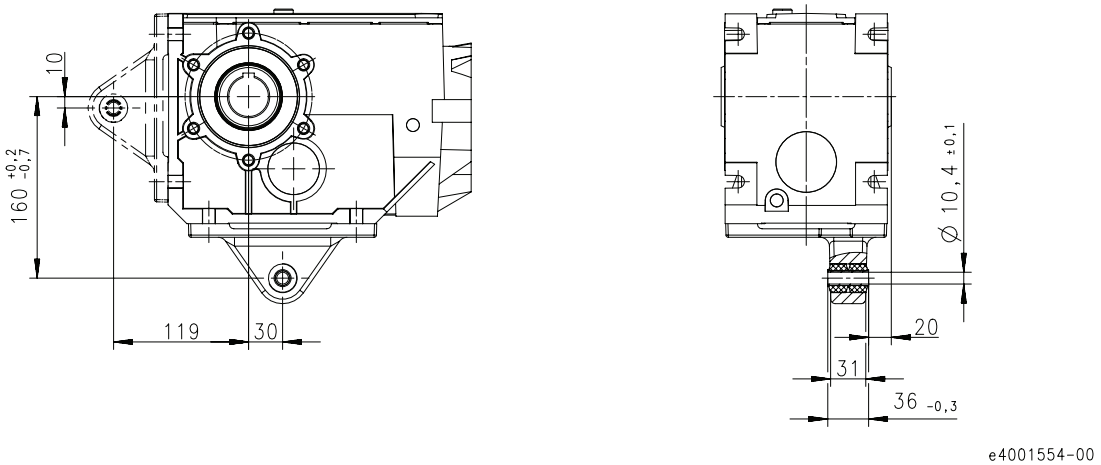

Product	Mass
	m
	[kg]
g500-B240	2.40
g500-B450	1.10



Torque plate

Rubber buffer for torque plate

g500-B45

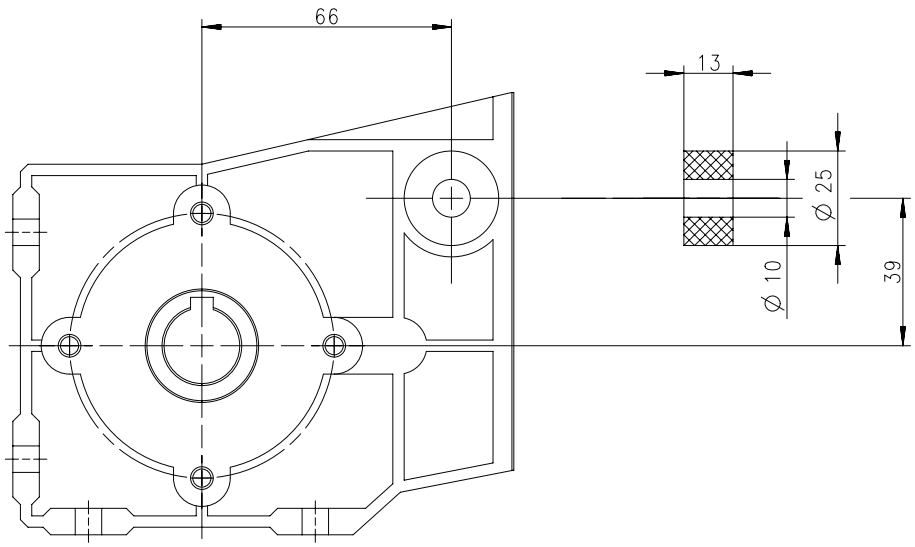



Shaft cover

Hoseproof hollow shaft cover

The cover protects the hollow shaft from objects falling in. It is sealed by a flat gasket between cover and housing. Thus, the hollow shaft is protected from dust and water jets.

The cover is loosely enclosed and can be mounted on both sides of the hollow shaft bore.

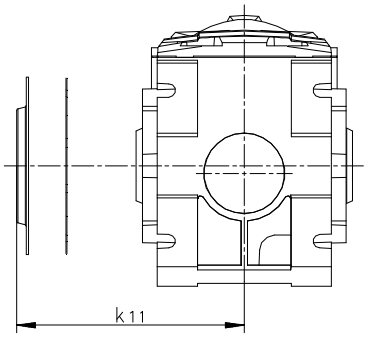

6.7

Product	Dimensions	Mass
	k_{11}	m
	[mm]	[kg]
g500-B45	55.0	0.050
g500-B110	65.0	0.050
g500-B240	75.0	0.10
g500-B450	79.5	0.15



Shaft cover

Shrink disc cover

The cover is provided for the shrink disc to be protected from contact.

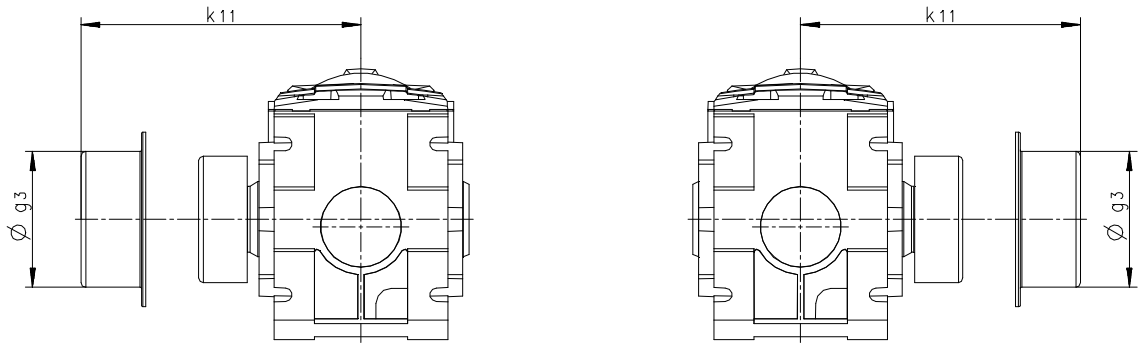

Product	Dimensions		Mass
	g_3	k_{11}	m
	[mm]	[mm]	[kg]
g500-B45	65.0	87.5	0.050
g500-B110	79.0	97.5	0.050
g500-B240	90.0	111	0.050
g500-B450	90.0	108	0.050



MCS synchronous servo motors

0.5 ... 190 Nm



MCS synchronous servo motors

Contents



General information	List of abbreviations	6.11 - 4
	Product key	6.11 - 6
	Product information	6.11 - 8
	Functions and features	6.11 - 9
	Dimensioning	6.11 - 10
Technical data	Standards and operating conditions	6.11 - 17
	Permissible radial and axial forces	6.11 - 18
	Rated data, non-ventilated	6.11 - 19
	Rated data, forced ventilated	6.11 - 24
	Selection tables, Servo Drives 9400 HighLine	6.11 - 26
	Selection tables, Inverter Drives 8400 TopLine	6.11 - 36
	Selection tables, Servo Drives ECS	6.11 - 47
	Selection tables, Servo Inverter 9300	6.11 - 56
	Torque characteristics	6.11 - 63
	Dimensions, self-ventilated	6.11 - 100
	Dimensions, forced ventilated	6.11 - 104
Accessories	Permanent magnet holding brake	6.11 - 107
	Resolver	6.11 - 109
	Incremental encoder and SinCos absolute value encoder	6.11 - 110
	Blower	6.11 - 112
	Temperature monitoring	6.11 - 113
	Terminal box	6.11 - 114
	ICN connector	6.11 - 116



List of abbreviations

$\eta_{100\,\%}$	[%]	Efficiency
cos ϕ		Power factor
du/dt	[kV/µs]	Insulation resistance
$F_{ax,-}$	[N]	Min. axial force
$F_{ax,+}$	[N]	Max. axial force
$f_{in,max}$	[Hz]	Max. input frequency
f_{max}	[kHz]	Limit frequency
f_{max}	[kHz]	Max. switching frequency
f_N	[Hz]	Rated frequency
F_{rad}	[N]	Max. radial force
H_{max}	[m]	Site altitude
I_0	[A]	Standstill current
I_{max}	[A]	Max. short-time DC-bus current
I_{max}	[A]	Max. current
I_{max}	[A]	Max. current consumption
I_{max}	[A]	Max. current
I_{max}	[A]	Max. DC-bus current
I_N	[A]	Rated current
J	[kgcm²]	Moment of inertia
J_{MB}	[kgcm²]	Moment of inertia
$KE_{LL\,150\,°C}$	[V /(1000 r/min)]	Voltage constant
$Kt_{0\,150\,°C}$	[Nm/A]	Torque constant
L	[mH]	Mutual inductance
$L_{1\sigma}$	[mH]	Stator leakage inductance
$L_{2\sigma}$	[mH]	Rotor leakage inductance
L_N	[mH]	Rated inductance
m	[kg]	Mass
M_0	[Nm]	Stall torque
$M_{0,\,max}$	[Nm]	Max. standstill torque
M_{av}	[Nm]	Average dynamic torque
M_{max}	[Nm]	Max. torque
M_N	[Nm]	Rated torque
n_{eto}	[r/min]	Transition speed
n_k	[r/min]	Speed
n_{max}	[r/min]	Max. speed

n_N	[r/min]	Rated speed
P_N	[kW]	Rated power
Q_E	[J]	Maximum switching energy
R	[Ω]	Insulation resistance
R	[Ω]	Min. insulation resistance
R_1	[Ω]	Stator impedance
R_2	[Ω]	Charging resistor
R_2	[Ω]	Rotor impedance
$R_{UV\,150\,°C}$	[Ω]	Stator impedance
$R_{UV\,20\,°C}$	[Ω]	Stator impedance
$S_{hü}$	[1/h]	Transition operating frequency
T	[°C]	Operating temperature
T	[°C]	Rated temperature
T	[°C]	Max. ambient temperature of bearing
T	[°C]	Max. surface temperature
T	[°C]	Max. ambient temperature for transport
T	[°C]	Min. ambient storage temperature
T	[°C]	Min. ambient temperature for transport
T	[°C]	Ambient temperature
t_1	[ms]	Engagement time
t_2	[ms]	Disengagement time
$T_{opr,max}$	[°C]	Max. ambient operating temperature
$T_{opr,min}$	[°C]	Min. ambient operating temperature
$U_{in,max}$	[V]	Max. input voltage
$U_{in,min}$	[V]	Min. input voltage
U_{max}	[V]	Max. mains voltage
U_{max}	[V]	Min. input voltage
U_{min}	[V]	Min. mains voltage
$U_{N,\,AC}$	[V]	Rated voltage
$U_{N,\,DC}$	[V]	Rated voltage
Z_{ro}	[Ω]	Rotor impedance
Z_{rs}	[Ω]	Impedance
Z_{so}	[Ω]	Stator impedance



List of abbreviations

CE	Communauté Européenne
CSA	Canadian Standards Association
DIN	Deutsches Institut für Normung e.V.
EMC	Electromagnetic compatibility
EN	European standard
EAC	Customs union Russia / Belarus / Kazakhstan certificate
IEC	International Electrotechnical Commission
IM	International Mounting Code
IP	International Protection Code
NEMA	National Electrical Manufacturers Association
UkrSEPRO	Certificate for Ukraine
UL	Underwriters Laboratory Listed Product
UR	Underwriters Laboratory Recognized Product
VDE	Verband deutscher Elektrotechniker (Association of German Electrical Engineers)



Product key

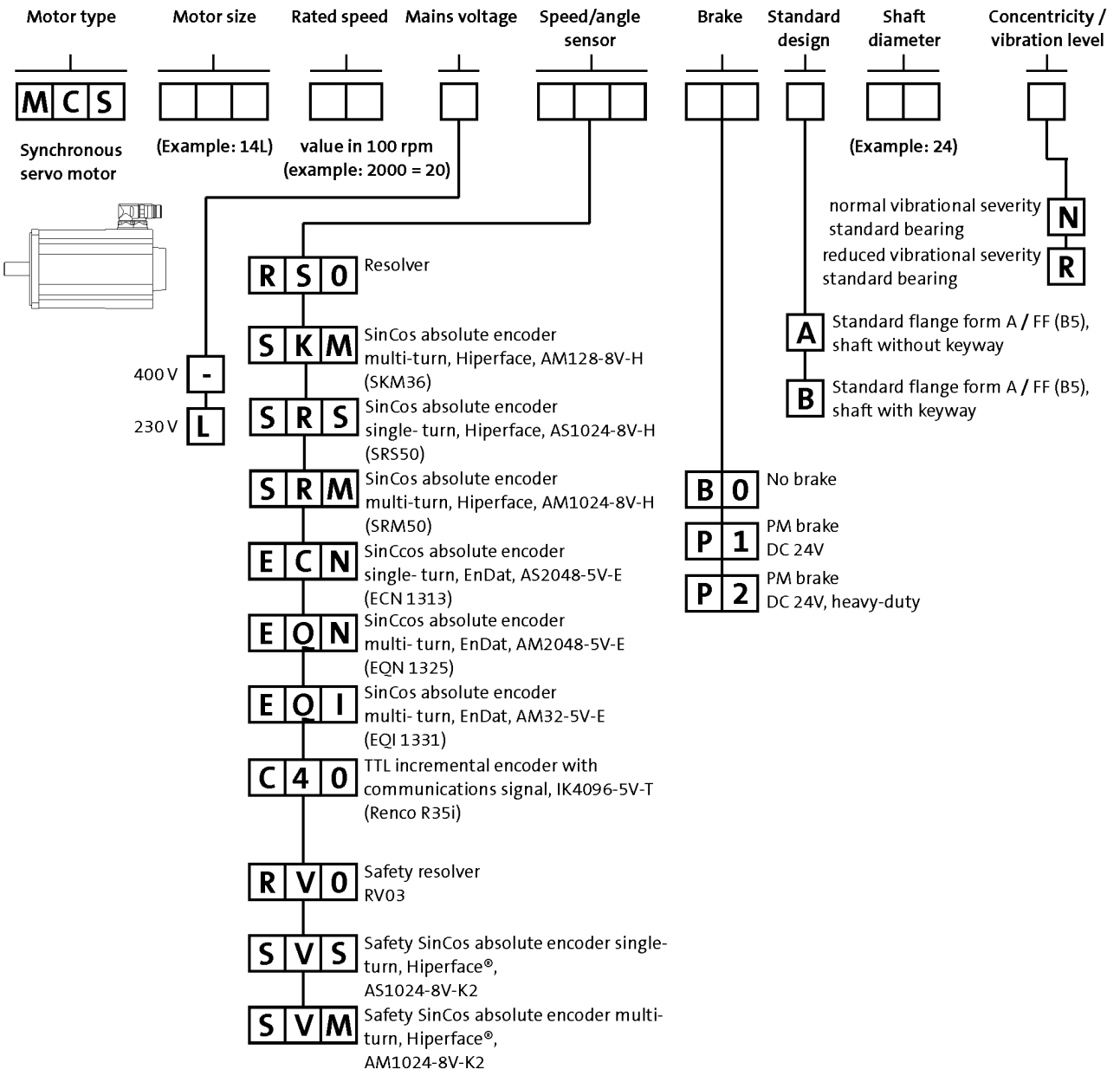
Motor type
Motor size
Rated speed
Mains voltage
Speed/angle sensor
Brake
Standard design
Shaft diameter
Concentricity / vibration level
M C S
Synchronous servo motor
(Example: 14L)
value in 100 rpm (example: 2000 = 20)
(Example: 24)
normal vibrational severity standard bearing
N
reduced vibrational severity standard bearing
R
A
Standard flange form A / FF (B5), shaft without keyway
B
Standard flange form A / FF (B5), shaft with keyway
400 V
-
230 V
L
R S 0
Resolver
S K M
SinCos absolute encoder multi-turn, Hiperface, AM128-8V-H (SKM36)
S R S
SinCos absolute encoder single- turn, Hiperface, AS1024-8V-H (SRS50)
S R M
SinCos absolute encoder multi-turn, Hiperface, AM1024-8V-H (SRM50)
E C N
SinCcos absolute encoder single- turn, EnDat, AS2048-5V-E (ECN 1313)
E Q N
SinCcos absolute encoder multi- turn, EnDat, AM2048-5V-E (EQN 1325)
E Q I
SinCos absolute encoder multi- turn, EnDat, AM32-5V-E (EQI 1331)
C 4 0
TTL incremental encoder with communications signal, IK4096-5V-T (Renco R35i)
R V 0
Safety resolver RV03
S V S
Safety SinCos absolute encoder single-turn, Hiperface®, AS1024-8V-K2
S V M
Safety SinCos absolute encoder multi-turn, Hiperface®, AM1024-8V-K2
B 0
No brake
P 1
PM brake DC 24V
P 2
PM brake DC 24V, heavy-duty



Product key

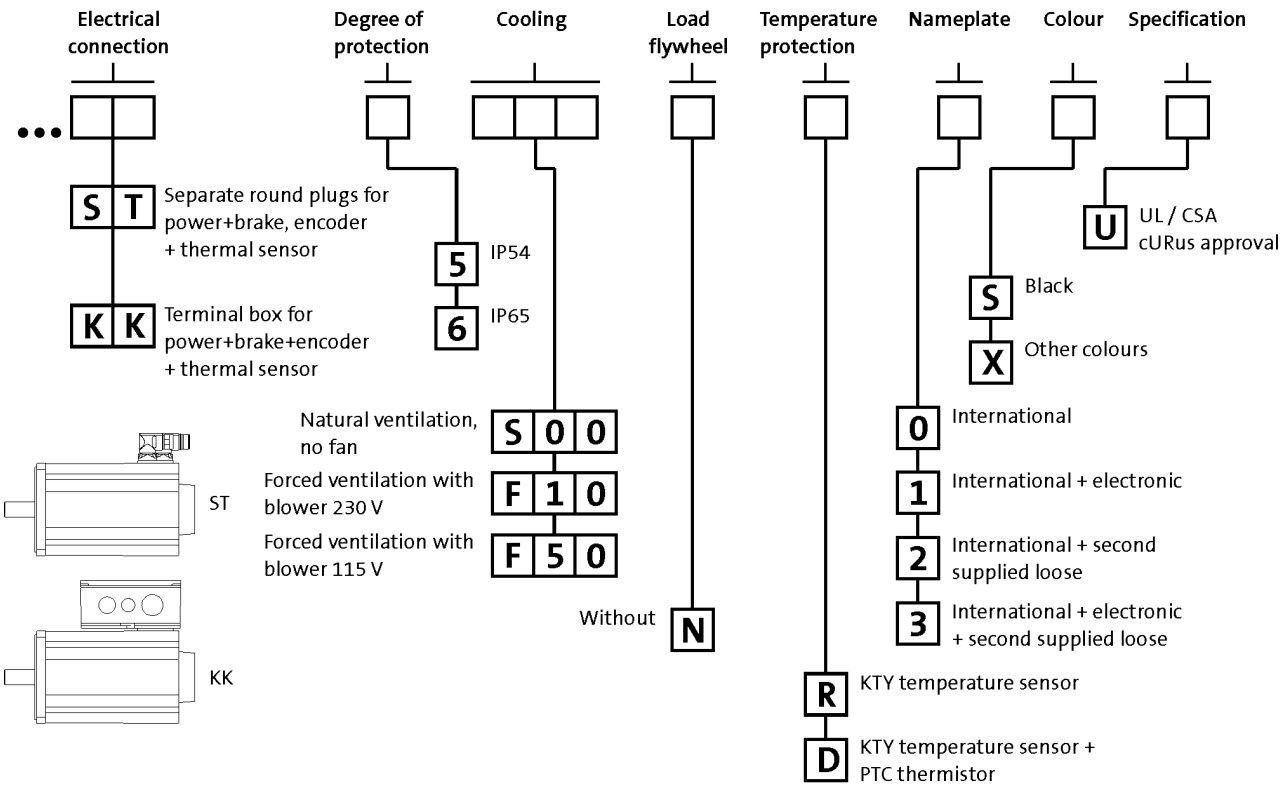
Electrical connection
Degree of protection
Cooling
Load flywheel
Temperature protection
Nameplate
Colour
Specification
S T
Separate round plugs for power+brake, encoder + thermal sensor
K K
Terminal box for power+brake+encoder + thermal sensor
5
IP54
6
IP65
S 0 0
Natural ventilation, no fan
F 1 0
Forced ventilation with blower 230 V
F 5 0
Forced ventilation with blower 115 V
N
Without
ST
KK
U
UL / CSA cURus approval
S
Black
X
Other colours
0
International
1
International + electronic
2
International + second supplied loose
3
International + electronic + second supplied loose
R
KTY temperature sensor
D
KTY temperature sensor + PTC thermistor



Product information

When space is limited, but strict requirements in terms of dynamics and precision still have to be met, the MCS synchronous servo motors are the right choice.

With a power range from 0.25 kW to 15.8 kW and a rated torque range from 0.5 Nm to 72 Nm and peak torques of up to 190 Nm, these motors leave nothing to be desired in installations requiring compact and dynamic drive technology.
The stator winding of the MCS motors employs innovative Single Element Pole Technology – SEPT – and is made up of individual coils. High-quality magnetic materials and specially developed pole shapes set the conditions for their excellent drive characteristics. This results in a significant increase in power density, while at the same time reducing moments of inertia. The minimum detent torques offer exceptional smooth running characteristics and thereby secure excellent control behaviour.

The robust mechanical structure with reinforced bearings, the high degree of protection and the full stator encapsulation increase operational reliability, even in harsh ambient conditions.

Advantages
- High dynamic performance thanks to low moments of inertia
- Compact size with high power density
- Cooling with or without axial external fan
- Robust regenerative resolver system as standard
- Alternatively sin/cos encoder for the highest precision
- Easy to install and service friendly thanks to use of SpeedTec connectors
- Optional terminal box
- Protection: IP54, IP65 optional
- cURus-approved, GOST-certified, CE, RoHS compliant
- Smooth surface
- Single Element Pole Technology
- Optimum rotation characteristics
- Virtually free of detent torque
- Electronic nameplate



MCS09 synchronous servo motor



Functions and features

	MCS06	MCS09	MCS12	MCS14	MCS19
Design					
	B5-FF75	B5-FF100	B5-FF130	B5-FF165	B5-FF215
Shaft end (with and without keyway)					
	11 x 23	14 x 30	19 x 40	24 x 50	28 x 60
A end shield					
	Not oil-tight				
Brake					
Permanent magnetic brake	DC 24 V	DC 24 V 24 V DC, reinforced			
Speed and angle encoder					
	Resolver SinCos single-turn/multi-turn				
Cooling					
Without blower	Naturally ventilated				
Axial blower, 1 phase			230 V; 50 Hz 115 V; 60 Hz		
Temperature sensor					
Thermal detector	KTY				
PTC thermistor		2x PTC additional (3-phase monitoring)			
Motor connection: plug connector					
	Power + brake Encoder + thermal sensor		Power + brake Encoder + thermal sensor Blower		
Motor connection: terminal box					
		Power + brake + encoder + thermal sensor			
Shaft bearings					
Bearing type	Deep-groove ball bearing with high-temperature resistant grease, sealing disc or cover plate				
Position of the locating bearing	Non-drive end				
Colour					
	RAL9005M				

► Terminal boxes not possible if blower is fitted.



Dimensioning

Speed-dependent safety functions

Single encoder concepts with resolvers

Servo motors can perform speed-dependent safety functions for safe speed and / or safe relative position monitoring in a drive system with the Servo Drives 9400. The SM301 safety module, which can be integrated in the Servo Drives 9400, is used to implement these functions. When planning systems/installations of this kind, the following must always be observed:

When using just one single feedback system in the environment of these safety applications, the applicable safety engineering standard IEC 61800-5-2 [Adjustable speed electrical power drive systems - Part: 5-2: Safety requirements - Functional] stipulates special requirements for the connection between feedback system and motor shaft. This is due to the fact that two-channel safety systems at this point in the mechanical system are actually designed as single-channel systems. If this mechanical connection is designed with considerable overdimensioning, the standard permits exclusion of the fault "encoder-shaft breakage" or "encoder-shaft slip".
As such, acceleration limit values must not be exceeded for the individual drive solutions. You can find the limit values in the corresponding feedback data of the individual motor ranges.

Speed-dependent safety functions in connection with the SM301 safety module

For the following speed-dependent safety functions, the motor-feedback system combinations listed in the following table are available:
- Safe stop 1 (SS1)
- Safe operational stop (SOS)
- Safely Limited Speed (SLS)
- Safe Maximum Speed (SMS)
- Safe direction (SDI)
- Operation mode selector (OMS) with confirmation (ES)
- Safe speed monitor (SSM)
- Safely limited increment (SLI).

Encoder type	Encoder type	Product key	Feedback	Safe speed monitoring
			Design	
SinCos absolute value	Single-turn	AS1024-8V-K2		PL d/SIL 2
	Multi-turn	AM1024-8V-K2		
Resolver		RV03		PL e/SIL 3
			2-encoder concept	up to PL e / SIL 3



Dimensioning

Cooling effect of mounting flange

Mounting on a thermally conducting / insulating plate or machine chassis has an influence on heating up the motor, particularly when using naturally ventilated motors.

The motor rating data specified in the catalogue applies when mounting on a steel plate with free convection with the following dimensions:

- MCS06: 270 x 270 mm
- MCS09: 330 x 330 mm
- MCS12 / 14 / 19: 450 x 450 mm

Vibrational severity

		MCS06	MCS09	MCS12	MCS14	MCS19
Vibrational severity						
IEC/EN 60034-14				A		
Maximum r.m.s. value of the vibration velocity [1)]	[mm/s]			1.60		

[1)] Free suspension

► at n = 600 to 3,600 rpm



Dimensioning

Concentricity and axial run-out of the mounting flanges and smooth running of the shaft ends

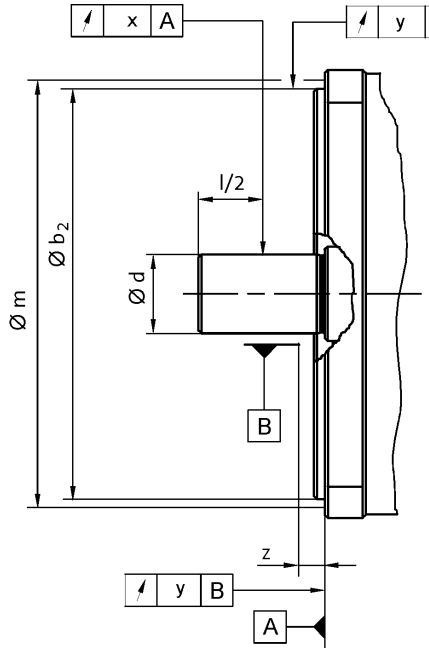

				MCS06	MCS09	MCS12	MCS14	MCS19
Flange size								
				FF75	FF100	FF130	FF165	FF215
Dimensions								
	b_2	j6	[mm]	60	80	110	130	180
	d	k6	[mm]	11	14	19	24	28
Distance								
Measuring diameter	m		[mm]	65.0	85.0	115	135	185
Dial gauge holder for flange check	z	+/- 1	[mm]	10.0				
Concentricity								
IEC 60072				Normal class				
Value	y		[mm]	0.080		0.10		
Linear movement								
IEC 60072				Normal class				
Value	y		[mm]	0.080		0.10		
Smooth running								
IEC 60072				Normal class				
Value	x		[mm]	0.035		0.040		

► Limit values for checking the smooth running of the shaft ends as well as the concentricity and axial run-out of the mounting flange to IEC 60072



Dimensioning

Notes on the selection tables

Graphical display of the operating points

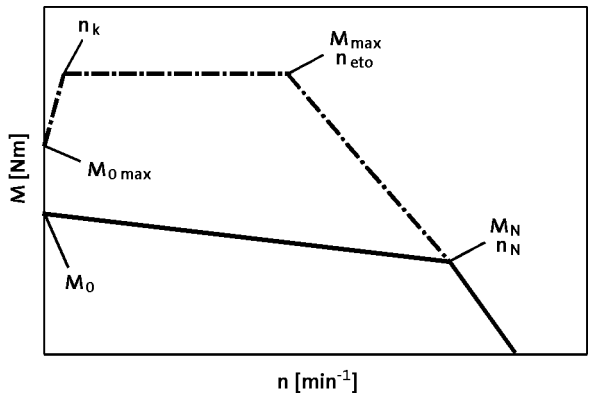

	n_k
	[r/min]
MCS	75.0
MDSKS	100
MDFKS	

Further selection tables with different switching frequencies are available with the following codes:
- DS_ZT_MCS_0001
- DS_ZT_MCA_0001
- DS_ZT_MDSKS_0001
- DS_ZT_MDFKS_0001

Simply enter this code (e.g. DS_ZT_MCS_0001) as a search string at **www.lenze.de/dsc** and you will be given the information immediately in the form of a PDF format.

Please note:
- In case of an active load (e.g. vertical drive axes, hoists, test benches, unwinders), $M_{0\,max}$ has to be considered
- In case of a passive load (e.g. horizontal drive axes), M_{max} can be usually used
- In case of a speed < n_k and inverter-specifically, the achievable torque $M_{0\,max}$ is smaller than M_{max}
- In case of a speed n = 0, the standstill torque M_0 and the standstill current I_0 have to be reduced by 30% after 2 seconds. In case of applications which require a longer holding of M_0, we recommend the drive to be held via the holding brake and reduce the current, e.g. by controller inhibit.
- In case of servo inverters, the switching frequency dependent overload capacity is considered in the default setting. For more information, see the servo inverter catalogue.



Dimensioning

Notes on the torque characteristics

Graph of the torque characteristics

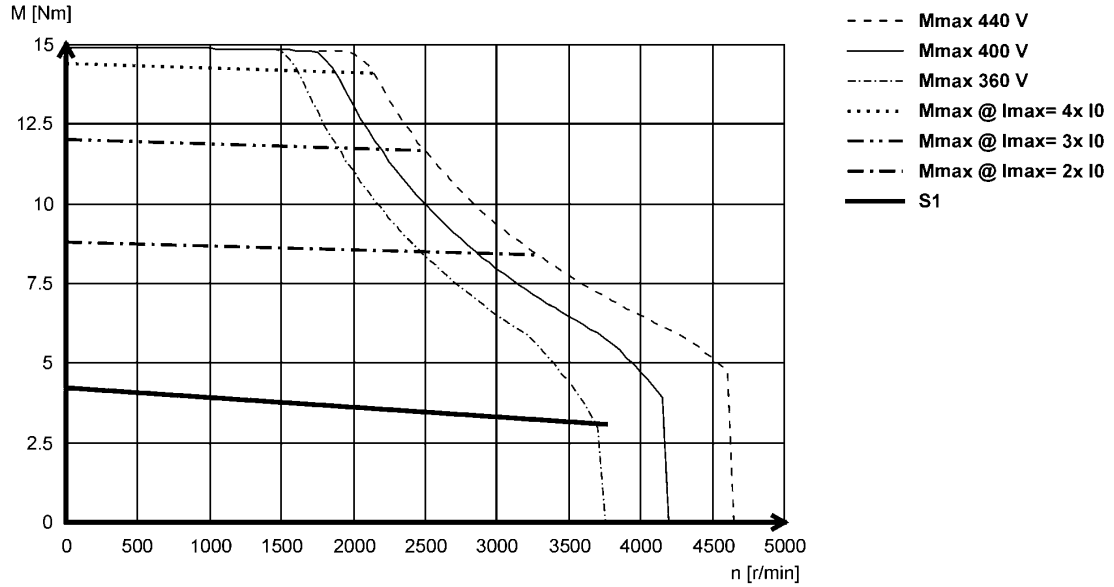

With synchronous servo motors, the limit torque characteristics that result from the selection of servo inverters with maximum currents are also shown alongside the characteristics for continuous operation (S1). These correspond to a multiple of the motor standstill current (2x I0 to 4x I0).

Characteristics in the Internet

You can find the torque characteristic for inverter-motor combinations on the Internet at **www.lenze.de/dsc**. This lists all useful combinations with the servo inverters 9400, 9300, ECS and Inverter Drives 8400 TopLine. These characteristics are each determined using the factory default settings of the inverters:

- 9400 with variables switching frequency.
  This means that up to 6-fold overcurrent can be applied in borderline cases.
- 9300 and ECS with fixed switching frequency.
- 8400 TopLine with variables switching frequency.

The continuous operation characteristics (S1) show the inverter-independent motor rating values

Further information on the terms switching frequency and factory default settings can be found in the operating manual of the respective servo inverter.



Dimensioning

Influence of ambient temperature and site altitude

The information relating to the servo motors in the tables and graphs is valid for a maximum ambient temperature (T_{opr}) of 40 °C and a site altitude (H) up to 1000 m above sea level. The torque correction factor (k_{M1}) shall be applied to the S1 torque characteristic (M_0...M_N) in the event of differing installation conditions.

► The maximum permissible ambient temperature (T_{opr}) for servo motors with blowers is 40 °C

Torque correction factor k_{m1}

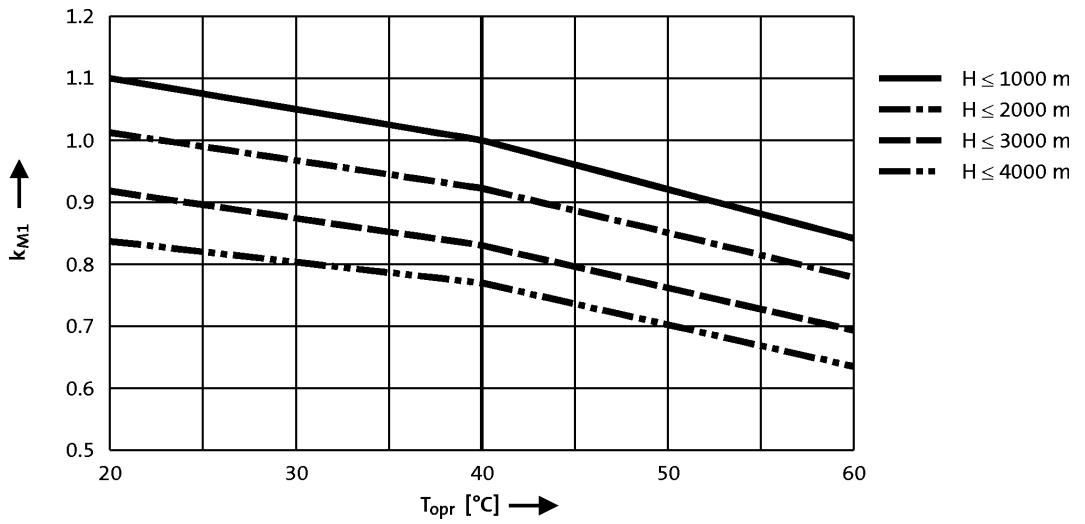





Standards and operating conditions

			MCS	
Cooling type				
			Naturally ventilated	Blower
Degree of protection				
EN 60529			IP54 IP65	IP54
Temperature class				
IEC/EN 60034-1; utilisation			F	
IEC/EN 60034-1; insulation system (enamel-insulated wire)			H	
Conformity				
CE			Low-Voltage Directive	
			2006/95/EC	
EAC			TP TC 004/2011 (TR CU 004/2011)	
Approval				
			UkrSEPRO	
CSA			CSA 22.2 No. 100	
cURus			UL 1004-1 UL 1004-6 Power Conversion Equipment (File-No. E210321)	
Max. voltage load				
IEC/TS 60034-25			Pulse voltage limiting curve A	
Smooth running				
IEC 60072			Normal class	
Linear movement				
IEC 60072			Normal class	
Concentricity				
IEC 60072			Normal class	
Mechanical ambient conditions (vibration)				
IEC/EN 60721-3-3			3M6	
Min. ambient operating temperature				
Without brake	$T_{opr,min}$	[°C]	-20	-15
With brake	$T_{opr,min}$	[°C]	-10	
Max. ambient temperature for operation				
	$T_{opr,max}$	[°C]	40	
Max. surface temperature				
	T	[°C]	140	110
Mechanical tolerance				
Flange centring diameter			$b_2 \leq 230$ mm = j6 $b_2 > 230$ mm = h6	
Shaft diameter			d ≤ 50 mm = k6 d > 50 mm = m6	
Site altitude				
Amsl	H_{max}	[m]	4000	



Permissible radial and axial forces

Application of forces

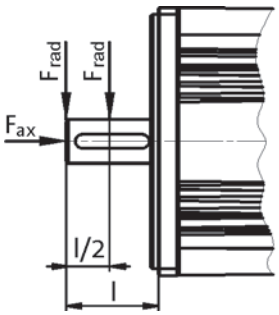

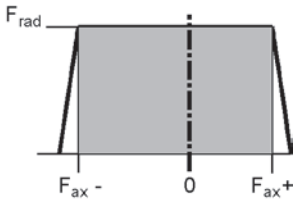

Application of force at l/2

Bearing service life L_{10}															
	5000 h			10000 h			20000 h			30000 h			50000 h		
	F_{rad}	$F_{ax,-}$	$F_{ax,+}$	F_{rad}	$F_{ax,-}$	$F_{ax,+}$	F_{rad}	$F_{ax,-}$	$F_{ax,+}$	F_{rad}	$F_{ax,-}$	$F_{ax,+}$	F_{rad}	$F_{ax,-}$	$F_{ax,+}$
	[N]	[N]	[N]	[N]	[N]	[N]	[N]	[N]	[N]	[N]	[N]	[N]	[N]	[N]	[N]
MCS06	740	-260	140	590	-210	80	470	-170	40	410	-150	30	340	-140	10
MCS09	1040	-700	470	830	-550	310	660	-440	200	580	-380	150	490	-330	90
MCS12	1030	-880	560	820	-690	370	650	-550	230	570	-490	160	480	-420	100
MCS14	1830	-1150	720	1450	-900	470	1150	-720	290	1010	-640	200	850	-550	120
MCS19	3840	-1550	950	3050	-1210	620	2430	-960	360	2120	-840	250	1790	-730	130

Application of force at l

Bearing service life L_{10}															
	5000 h			10000 h			20000 h			30000 h			50000 h		
	F_{rad}	$F_{ax,-}$	$F_{ax,+}$	F_{rad}	$F_{ax,-}$	$F_{ax,+}$	F_{rad}	$F_{ax,-}$	$F_{ax,+}$	F_{rad}	$F_{ax,-}$	$F_{ax,+}$	F_{rad}	$F_{ax,-}$	$F_{ax,+}$
	[N]	[N]	[N]	[N]	[N]	[N]	[N]	[N]	[N]	[N]	[N]	[N]	[N]	[N]	[N]
MCS06	630	-210	90	500	-170	50	400	-140	20	350	-130	0	290	-120	-10
MCS09	900	-630	400	710	-500	260	570	-400	160	500	-350	120	420	-300	70
MCS12	890	-820	490		-640	320	560	-520	190	490	-460	130		-400	
MCS14	1590	-1040	610	1260	-820	390	1000	-660	230	880	-580	150	740	-510	
MCS19	3330	-1320	730	2650	-1040	450	2100	-830	240	1840	-740	140	1550	-640	40

► The values for the bearing service life L_{10} refer to an average speed of 4000 r/min. Depending on the ambient temperatures, the service life of the bearings is also reduced by the grease lifetime.



Rated data, non-ventilated

► The data applies to a mains connection voltage of 3 x 400 V.

	n_N	M_0	M_N	M_{max}	P_N	I_0	I_N	I_{max}	$U_{N, AC}$	f_N
	[r/min]	[Nm]	[Nm]	[Nm]	[kW]	[A]	[A]	[A]	[V]	[Hz]
MCS06C41-	4050	0.80	0.60	2.40	0.25	1.30	1.30	5.40	225	270
MCS06C60-	6000	0.80	0.50	2.40	0.31	2.50	2.40	10.8	135	400
MCS06F41-	4050	1.50	1.20	4.40	0.51	1.50	1.50	5.30	320	270
MCS06F60-	6000	1.50	0.90	4.40	0.57	2.90	2.50	10.5	180	400
MCS06I41-	4050	2.00	1.50	6.20	0.64	1.70	1.60	5.90	325	270
MCS06I60-	6000	2.00	1.20	6.20	0.75	3.40	2.90	11.8	190	400
MCS09D41-	4050	3.30	2.30	9.50	1.00	2.60	2.30	10.0	320	270
MCS09D60-	6000	3.30	1.80	9.50	1.10	5.30	3.80	20.0	210	400
MCS09F38-	3750	4.20	3.10	15.0	1.20	3.00	2.50	15.0	330	250
MCS09F60-	6000	4.20	2.40	15.0	1.50	6.00	4.50	30.0	230	400
MCS09H41-	4050	5.50	3.80	20.0	1.60	4.30	3.40	20.0	300	270
MCS09H60-	6000	5.50	3.00	20.0	1.90	8.50	6.00	40.0	190	400
MCS09L41-	4050	7.50	4.50	32.0	1.90	6.20	4.20	32.0	295	270
MCS09L51-	5100	7.50	3.60	32.0	1.90	12.4	6.90	64.0	180	340

	$\eta_{100\,\%}$	J [1]	$KE_{LL\,150\,°C}$	$R_{UV\,20\,°C}$	$R_{UV\,150\,°C}$	L_N	$Kt_{0\,150\,°C}$	n_{max} [2]	m [1]
	[%]	[kgcm²]	[V /(1000 r/min)]	[Ω]	[Ω]	[mH]	[Nm/A]	[r/min]	[kg]
MCS06C41-	65.0	0.14	36.6	27.1	36.5	51.0	0.66	8000	1.80
MCS06C60-	70.0	0.14	18.3	6.80	9.10	12.8	0.33	8000	1.80
MCS06F41-	77.0	0.22	60.1	21.9	29.5	63.5	1.05	8000	2.20
MCS06F60-	81.0	0.22	30.0	5.50	7.40	15.9	0.53	8000	2.20
MCS06I41-	81.0	0.30	73.4	18.8	25.4	60.2	1.21	8000	2.90
MCS06I60-	84.0	0.30	36.7	4.70	6.30	15.1	0.60	8000	2.90
MCS09D41-	87.0	1.10	71.2	7.00	9.40	25.1	1.25	7000	4.30
MCS09D60-	87.0	1.10	35.6	1.80	2.40	6.30	0.62	7000	4.30
MCS09F38-	91.0	1.50	79.8	5.20	7.00	24.6	1.40	7000	5.20
MCS09F60-	91.0	1.50	39.9	1.30	1.80	6.20	0.70	7000	5.20
MCS09H41-	91.0	1.90	75.7	3.20	4.30	16.1	1.29	7000	6.10
MCS09H60-	91.0	1.90	37.8	0.80	1.10	4.00	0.65	7000	6.10
MCS09L41-	91.0	2.80	71.7	1.80	2.40	9.90	1.21	7000	7.90
MCS09L51-	91.0	2.80	35.9	0.44	0.59	2.50	0.60	7000	7.90

[1] Without brake.
[2] Mechanically permissible maximum speed.



Rated data, non-ventilated

► The data applies to a mains connection voltage of 3 x 400 V.

	n_N	M_0	M_N	M_{max}	P_N	I_0	I_N	I_{max}	$U_{N, AC}$	f_N
	[r/min]	[Nm]	[Nm]	[Nm]	[kW]	[A]	[A]	[A]	[V]	[Hz]
MCS12D20-	1950	6.40	5.50	18.0	1.10	2.70	2.60	10.0	345	130
MCS12D41-	4050	6.40	4.30	18.0	1.80	5.50	4.50	20.0	310	270
MCS12H15-	1500	11.4	10.0	29.0	1.60	4.10	3.80	12.0	300	100
MCS12H35-	3525	11.4	7.50	29.0	2.80	8.20	5.70	24.0	325	235
MCS12L20-	1950	15.0	13.5	56.0	2.80	6.20	5.90	28.0	330	130
MCS12L41-	4050	15.0	11.0	56.0	4.70	12.4	10.2	57.0	300	270
MCS14D15-	1500	11.0	9.20	29.0	1.45	5.00	4.50	17.0	305	100
MCS14D36-	3600	11.0	7.50	29.0	2.80	10.0	7.50	33.0	295	240
MCS14H15-	1500	21.0	16.0	55.0	2.50	8.50	6.60	26.0	325	100
MCS14H32-	3225	21.0	14.0	55.0	4.70	16.9	11.9	52.0	295	215
MCS14L15-	1500	28.0	23.0	77.0	3.60	12.0	9.70	37.0	315	100
MCS14L32-	3225	28.0	17.2	77.0	5.80	24.0	15.0	75.0	275	215
MCS14P14-	1350	37.0	30.0	105	4.20	12.2	10.8	46.0	340	90
MCS14P32-	3225	37.0	21.0	105	7.10	24.3	15.6	92.0	315	215

	$\eta_{100\,\%}$	J [1]	$KE_{LL\,150\,°C}$	$R_{UV\,20\,°C}$	$R_{UV\,150\,°C}$	L_N	$Kt_{0\,150\,°C}$	n_{max} [2]	m [1]
	[%]	[kgcm²]	[V /(1000 r/min)]	[Ω]	[Ω]	[mH]	[Nm/A]	[r/min]	[kg]
MCS12D20-	79.0	4.00	137	8.70	11.8	52.2	2.34	6000	6.40
MCS12D41-	84.0	4.00	68.6	2.20	2.90	13.0	1.17	6000	6.40
MCS12H15-	88.0	7.30	173	5.70	7.70	42.1	2.79	6000	9.50
MCS12H35-	91.0	7.30	86.5	1.40	1.90	10.5	1.40	6000	9.50
MCS12L20-	90.0	10.6	149	2.20	3.00	21.8	2.42	6000	12.6
MCS12L41-	91.0	10.6	74.6	0.55	0.75	5.50	1.21	6000	12.6
MCS14D15-	88.0	8.10	129	4.00	5.40	49.8	2.19	6000	10.7
MCS14D36-	92.0	8.10	64.2	1.00	1.35	12.5	1.09	6000	10.7
MCS14H15-	92.0	14.2	153	2.08	2.81	34.1	2.48	6000	15.5
MCS14H32-	93.0	14.2	76.3	0.52	0.70	8.50	1.24	6000	15.5
MCS14L15-	90.0	23.4	152	1.21	1.64	22.0	2.33	6000	20.1
MCS14L32-	93.0	23.4	76.2	0.30	0.41	5.50	1.16	6000	20.1
MCS14P14-	90.0	34.7	179	1.10	1.49	23.9	3.04	6000	24.9
MCS14P32-	93.0	34.7	89.4	0.28	0.37	6.00	1.52	6000	24.9

[1] Without brake.
[2] Mechanically permissible maximum speed.



Rated data, non-ventilated

► The data applies to a mains connection voltage of 3 x 400 V.

	n_N	M_0	M_N	M_{max}	P_N	I_0	I_N	I_{max}	$U_{N, AC}$	f_N
	[r/min]	[Nm]	[Nm]	[Nm]	[kW]	[A]	[A]	[A]	[V]	[Hz]
MCS19F14-	1425	32.0	27.0	86.0	4.00	9.90	8.60	31.0	335	95
MCS19F30-	3000	32.0	21.0	86.0	6.60	19.8	14.0	63.0	300	200
MCS19J14-	1425	51.0	40.0	129	6.00	15.2	12.3	45.0	330	95
MCS19J30-	3000	51.0	29.0	129	9.10	30.5	18.5	90.0	300	200
MCS19P14-	1350	64.0	51.0	190	7.20	17.5	14.3	60.0	330	90
MCS19P30-	3000	64.0	32.0	190	10.0	34.9	19.0	120	320	200

	$\eta_{100\,\%}$	J [1]	$KE_{LL\,150\,°C}$	$R_{UV\,20\,°C}$	$R_{UV\,150\,°C}$	L_N	$Kt_{0\,150\,°C}$	n_{max} [2]	m [1]
	[%]	[kgcm²]	[V /(1000 r/min)]	[Ω]	[Ω]	[mH]	[Nm/A]	[r/min]	[kg]
MCS19F14-	92.0	65.0	195	1.30	1.75	20.8	3.23	4000	23.0
MCS19F30-	93.0	65.0	97.2	0.32	0.44	5.20	1.62	4000	23.0
MCS19J14-	92.0	105	199	0.65	0.88	12.8	3.31	4000	30.0
MCS19J30-	93.0	105	99.5	0.16	0.22	3.20	1.65	4000	30.0
MCS19P14-	92.0	160	216	0.54	0.73	9.60	3.66	4000	40.0
MCS19P30-	93.0	160	108	0.14	0.18	2.40	1.83	4000	40.0

[1] Without brake.
[2] Mechanically permissible maximum speed.



Rated data, non-ventilated

► The data applies to a mains connection voltage of 3 x 230 V.

	n_N	M_0	M_N	M_{max}	P_N	I_0	I_N	I_{max}	$U_{N, AC}$	f_N
	[r/min]	[Nm]	[Nm]	[Nm]	[kW]	[A]	[A]	[A]	[V]	[Hz]
MCS06C41L	4050	0.80	0.60	2.40	0.25	2.50	2.50	10.8	125	270
MCS06C60L	6000	0.80	0.50	2.40	0.31	4.30	4.00	18.5	85	400
MCS06F41L	4050	1.50	1.20	4.40	0.51	2.90	2.90	10.5	165	270
MCS06F60L	6000	1.50	0.90	4.40	0.57	3.80	3.40	16.5	125	400
MCS06I41L	4050	2.00	1.50	6.20	0.64	3.10	2.90	11.8	175	270
MCS06I60L	6000	2.00	1.20	6.20	0.75	4.20	3.60	16.0	150	400
MCS09D41L	4050	3.30	2.30	9.50	1.00	5.30	4.60	20.0	165	270
MCS09D60L	6000	3.30	1.80	9.50	1.10	10.3	7.00	39.0	110	400
MCS09F38L	3750	4.20	3.10	15.0	1.20	6.00	5.00	30.0	160	250
MCS09F60L	6000	4.20	2.40	15.0	1.50	10.5	7.90	53.0	125	400
MCS09H41L	4050	5.50	3.80	20.0	1.60	8.50	6.80	40.0	160	270
MCS09H60L	6000	5.50	3.00	20.0	1.90	12.0	8.00	57.0	145	400
MCS09L41L	4050	7.50	4.50	32.0	1.90	12.4	8.40	64.0	145	270

	$\eta_{100\,\%}$	J [1]	$KE_{LL\,150\,°C}$	$R_{UV\,20\,°C}$	$R_{UV\,150\,°C}$	L_N	$Kt_{0\,150\,°C}$	n_{max} [2]	m [1]
	[%]	[kgcm²]	[V /(1000 r/min)]	[Ω]	[Ω]	[mH]	[Nm/A]	[r/min]	[kg]
MCS06C41L	65.0	0.14	21.5	6.00	8.00	12.8	0.33	8000	1.80
MCS06C60L	70.0	0.14	12.5	2.20	2.90	4.30	0.19	8000	1.80
MCS06F41L	81.0	0.22	34.5	5.50	7.40	15.9	0.62	8000	2.20
MCS06F60L	82.0	0.22	22.2	2.30	3.00	6.90	0.40	8000	2.20
MCS06I41L	81.0	0.30	38.0	4.70	6.20	15.1	0.64	8000	2.90
MCS06I60L	84.0	0.30	28.5	2.50	3.40	9.30	0.48	8000	2.90
MCS09D41L	87.0	1.10	35.6	1.80	2.40	6.30	0.62	7000	4.30
MCS09D60L	87.0	1.10	18.3	0.45	0.61	1.70	0.32	7000	4.30
MCS09F38L	90.0	1.50	39.9	1.30	1.80	6.20	0.70	7000	5.20
MCS09F60L	91.0	1.50	22.8	0.42	0.56	2.00	0.40	7000	5.20
MCS09H41L	91.0	1.90	37.8	0.80	1.10	4.00	0.65	7000	6.10
MCS09H60L	91.0	1.90	26.6	0.36	0.48	2.00	0.46	7000	6.10
MCS09L41L	91.0	2.80	35.9	0.44	0.59	2.50	0.60	7000	7.90

[1] Without brake.
[2] Mechanically permissible maximum speed.



Rated data, non-ventilated

► The data applies to a mains connection voltage of 3 x 230 V.

	n_N	M_0	M_N	M_{max}	P_N	I_0	I_N	I_{max}	$U_{N, AC}$	f_N
	[r/min]	[Nm]	[Nm]	[Nm]	[kW]	[A]	[A]	[A]	[V]	[Hz]
MCS12D20L	1950	6.40	5.50	18.0	1.10	5.50	5.20	20.0	175	130
MCS12D41L	4050	6.40	4.30	18.0	1.80	10.7	8.80	40.0	155	270
MCS12H15L	1500	11.4	10.0	29.0	1.60	8.20	7.80	24.0	158	100
MCS12H30L	3000	11.4	8.00	29.0	2.50	13.5	10.5	39.0	165	200
MCS12L20L	1950	15.0	13.5	56.0	2.80	12.4	11.8	57.0	165	130

	$\eta_{100\,\%}$	J [1]	$KE_{LL\,150\,°C}$	$R_{UV\,20\,°C}$	$R_{UV\,150\,°C}$	L_N	$Kt_{0\,150\,°C}$	n_{max} [2]	m [1]
	[%]	[kgcm²]	[V /(1000 r/min)]	[Ω]	[Ω]	[mH]	[Nm/A]	[r/min]	[kg]
MCS12D20L	79.0	4.00	68.6	2.20	2.90	13.0	1.17	6000	6.40
MCS12D41L	84.0	4.00	35.0	0.55	0.75	3.40	0.60	6000	6.40
MCS12H15L	82.0	7.30	86.5	1.41	1.90	10.5	1.40	6000	9.50
MCS12H30L	87.0	7.30	53.0	0.50	0.67	4.00	0.86	6000	9.50
MCS12L20L	90.0	10.6	76.9	0.55	0.75	5.50	1.21	6000	12.6

[1] Without brake.
[2] Mechanically permissible maximum speed.



Rated data, forced ventilated

► The data applies to a mains connection voltage of 3 x 400 V.

	n_N	M_0	M_N	M_{max}	P_N	I_0	I_N	I_{max}	$U_{N, AC}$	f_N
	[r/min]	[Nm]	[Nm]	[Nm]	[kW]	[A]	[A]	[A]	[V]	[Hz]
MCS12D17-	1650	7.50	7.00	17.7	1.20	3.20	3.00	10.0	330	110
MCS12D35-	3525	7.50	6.00	17.7	2.20	6.40	5.60	20.0	300	235
MCS12H14-	1350	12.8	12.0	29.0	1.70	4.30	4.10	12.0	310	90
MCS12H34-	3375	12.8	10.5	29.0	3.70	8.50	7.50	24.0	320	225
MCS12L17-	1650	19.0	17.0	56.4	2.90	7.20	6.70	28.0	300	110
MCS12L39-	3900	19.0	14.0	56.4	5.70	14.4	11.7	57.0	295	260
MCS14D14-	1350	12.5	12.0	29.0	1.70	5.70	5.40	17.0	345	90
MCS14D30-	3000	12.5	10.5	29.0	3.30	11.4	9.70	33.0	325	200
MCS14H12-	1200	25.5	23.5	54.8	3.00	9.30	8.30	26.0	335	80
MCS14H28-	2775	25.5	20.5	54.8	6.00	18.4	15.0	52.0	325	185
MCS14L14-	1350	34.5	30.5	77.1	4.30	13.4	11.8	37.0	335	90
MCS14L30-	3000	34.5	25.5	77.1	8.00	26.7	20.8	75.0	310	200
MCS14P11-	1050	43.5	42.0	105	4.60	14.1	13.4	46.0	330	70
MCS14P26-	2625	43.5	33.0	105	9.10	28.3	21.9	92.0	325	175

	$\eta_{100\,\%}$	J [1]	$KE_{LL\,150\,°C}$	$R_{UV\,20\,°C}$	$R_{UV\,150\,°C}$	L_N	$Kt_{0\,150\,°C}$	n_{max} [2]	m [1]
	[%]	[kgcm²]	[V /(1000 r/min)]	[Ω]	[Ω]	[mH]	[Nm/A]	[r/min]	[kg]
MCS12D17-	75.0	4.00	137	8.72	11.8	52.2	2.34	6000	8.50
MCS12D35-	82.0	4.00	68.6	2.18	2.94	13.0	1.17	6000	8.50
MCS12H14-	80.0	7.30	173	5.72	7.72	42.1	2.98	6000	11.6
MCS12H34-	86.0	7.30	86.5	1.39	1.88	10.5	1.51	6000	11.6
MCS12L17-	90.0	10.6	149	2.22	2.99	21.8	2.64	6000	14.7
MCS12L39-	94.0	10.6	74.6	0.55	0.75	5.50	1.32	6000	14.7
MCS14D14-	84.0	8.10	129	4.00	5.40	49.8	2.19	6000	14.5
MCS14D30-	92.0	8.10	64.2	1.00	1.35	12.5	1.09	6000	14.5
MCS14H12-	87.0	14.2	153	2.08	2.81	34.1	2.75	6000	19.5
MCS14H28-	93.0	14.2	76.3	0.52	0.70	8.50	1.39	6000	19.5
MCS14L14-	88.0	23.4	152	1.21	1.64	22.0	2.57	6000	24.0
MCS14L30-	92.0	23.4	76.2	0.30	0.41	5.50	1.29	6000	24.0
MCS14P11-	86.0	34.7	179	1.10	1.49	23.9	3.08	6000	29.0
MCS14P26-	92.0	34.7	89.4	0.28	0.37	6.00	1.54	6000	29.0

[1] Without brake.
[2] Mechanically permissible maximum speed.



Rated data, forced ventilated

► The data applies to a mains connection voltage of 3 x 400 V.

	n_N	M_0	M_N	M_{max}	P_N	I_0	I_N	I_{max}	$U_{N, AC}$	f_N
	[r/min]	[Nm]	[Nm]	[Nm]	[kW]	[A]	[A]	[A]	[V]	[Hz]
MCS19F12-	1200	41.5	38.0	86.0	4.80	12.2	11.3	31.0	320	80
MCS19F29-	2850	41.5	32.5	86.0	9.70	24.5	20.1	63.0	320	190
MCS19J12-	1200	70.5	62.5	129	7.90	20.3	18.3	45.0	320	80
MCS19J29-	2850	70.5	50.5	129	15.1	40.6	31.0	90.0	315	190
MCS19P12-	1200	86.0	72.0	190	9.00	22.4	21.3	60.0	310	80
MCS19P29-	2850	86.0	53.0	190	15.8	44.7	29.5	120	315	190

	$\eta_{100\,\%}$	J [1]	$KE_{LL\,150\,°C}$	$R_{UV\,20\,°C}$	$R_{UV\,150\,°C}$	L_N	$Kt_{0\,150\,°C}$	n_{max} [2]	m [1]
	[%]	[kgcm²]	[V /(1000 r/min)]	[Ω]	[Ω]	[mH]	[Nm/A]	[r/min]	[kg]
MCS19F12-	90.4	65.0	195	1.30	1.75	20.8	3.40	4000	29.0
MCS19F29-	94.7	65.0	97.2	0.32	0.44	5.20	1.69	4000	29.0
MCS19J12-	89.3	105	199	0.65	0.88	12.8	3.47	4000	36.0
MCS19J29-	92.8	105	99.5	0.16	0.22	3.20	1.74	4000	36.0
MCS19P12-	90.3	160	216	0.54	0.73	9.60	3.84	4000	46.0
MCS19P29-	93.4	160	108	0.14	0.18	2.40	1.92	4000	46.0

[1] Without brake.
[2] Mechanically permissible maximum speed.



Selection tables, Servo Drives 9400 HighLine

Non-ventilated motors

► The data applies to a mains connection voltage of 3 x 400 V and an inverter switching frequency of 4 kHz.

					E94A□□	E0024	E0034	E0044	E0074	E0094	E0134	E0174	E0244	E0324	E0474	E0594
					I_N	1.9	3.1	5.0	8.8	11.7	16.3	20.6	29.4	38.4	47.0	59.0
					$I_{0,max}$	6.0	10.0	16.0	21.0	28.0	39.0	49.5	58.8	76.8	94.0	118.0
MCS	M_N	n_N	I_N	P_N	I_{max}	6.0	10.0	16.0	21.0	28.0	39.0	49.5	58.8	76.8	94.0	118.0
06C41-	0.6	4050	1.3	0.25	M_0	0.8										
					M_N	0.6										
					$M_{0,max}$	2.4										
					M_{max}	2.4										
					n_{eto}	-										
06C60-	0.5	6000	2.4	0.31	M_0	0.6	0.8									
					M_N	0.4	0.5									
					$M_{0,max}$	1.5	2.3									
					M_{max}	1.5	2.3									
					n_{eto}	-	-									
06F41-	1.2	4050	1.5	0.51	M_0	1.5										
					M_N	1.2										
					$M_{0,max}$	4.4										
					M_{max}	4.4										
					n_{eto}	-										
06F60-	0.9	6000	2.5	0.57	M_0	1.0	1.5									
					M_N	0.7	0.9									
					$M_{0,max}$	3.0	4.3									
					M_{max}	3.0	4.3									
					n_{eto}	-	-									
06I41-	1.5	4050	1.6	0.64	M_0	2.0										
					M_N	1.5										
					$M_{0,max}$	6.2										
					M_{max}	6.2										
					n_{eto}	-										
06I60-	1.2	6000	2.9	0.75	M_0	1.1	1.8	2.0								
					M_N	0.8	1.2	1.2								
					$M_{0,max}$	3.3	5.5	6.2								
					M_{max}	3.3	5.5	6.2								
					n_{eto}	-	-	-								
09D41-	2.3	4050	2.3	1.00	M_0	2.4	3.3									
					M_N	1.9	2.3									
					$M_{0,max}$	6.3	9.5									
					M_{max}	6.3	9.5									
					n_{eto}	-	-									
09D60-	1.8	6000	3.8	1.10	M_0			3.1	3.3							
					M_N			1.8	1.8							
					$M_{0,max}$			8.0	9.5							
					M_{max}			8.0	9.5							
					n_{eto}			-	-							
09F38-	3.1	3750	2.5	1.20	M_0		4.2	4.2								
					M_N		3.1	3.1								
					$M_{0,max}$		11.6	14.9								
					M_{max}		11.6	14.9								
					n_{eto}		-	-								

► I... [A], M... [Nm], n... [r/min], P... [kW]



Selection tables, Servo Drives 9400 HighLine

Non-ventilated motors

► The data applies to a mains connection voltage of 3 x 400 V and an inverter switching frequency of 4 kHz.

					E94A□□	E0024	E0034	E0044	E0074	E0094	E0134	E0174	E0244	E0324	E0474	E0594
					I_N	1.9	3.1	5.0	8.8	11.7	16.3	20.6	29.4	38.4	47.0	59.0
					$I_{0,max}$	6.0	10.0	16.0	21.0	28.0	39.0	49.5	58.8	76.8	94.0	118.0
MCS	**M_N**	**n_N**	**I_N**	**P_N**	I_{max}	6.0	10.0	16.0	21.0	28.0	39.0	49.5	58.8	76.8	94.0	118.0
09F60-	2.4	6000	4.5	1.50	M_0			3.5	4.2	4.2	4.2					
					M_N			2.4	2.4	2.4	2.4					
					$M_{0,max}$			9.8	12.0	14.4	14.9					
					M_{max}			9.8	12.0	14.4	14.9					
					n_{eto}			-	-	-	-					
09H41-	3.8	4050	3.4	1.60	M_0		4.0	5.5	5.5							
					M_N		3.5	3.8	3.8							
					$M_{0,max}$		12.0	17.5	20.4							
					M_{max}		12.0	17.5	20.4							
					n_{eto}		-	-	-							
09H60-	3.0	6000	6.0	1.90	M_0				5.5	5.5	5.5	5.5				
					M_N				3.0	3.0	3.0	3.0				
					$M_{0,max}$				12.5	15.8	20.1	20.4				
					M_{max}				12.5	15.8	20.1	20.4				
					n_{eto}				-	-	-	-				
09L41-	4.5	4050	4.2	1.90	M_0			6.0	7.5	7.5						
					M_N			4.5	4.5	4.5						
					$M_{0,max}$			17.4	22.2	28.5						
					M_{max}			17.4	22.2	28.5						
					n_{eto}			-	-	-						
09L51-	3.6	5100	6.9	1.90	M_0				5.3	7.0	7.5	7.5	7.5			
					M_N				3.6	3.6	3.6	3.6	3.6			
					$M_{0,max}$				11.9	15.5	20.9	25.8	29.7			
					M_{max}				11.9	15.5	20.9	25.8	29.7			
					n_{eto}				-	-	-	-	-			
12D20-	5.5	1950	2.6	1.10	M_0	4.4	6.4									
					M_N	4.0	5.5									
					$M_{0,max}$	11.8	17.7									
					M_{max}	11.8	17.7									
					n_{eto}	-	-									
12D41-	4.3	4050	4.5	1.80	M_0			5.9	6.4							
					M_N			4.3	4.3							
					$M_{0,max}$			14.7	17.7							
					M_{max}			14.7	17.7							
					n_{eto}			-	-							
12H15-	10.0	1500	3.8	1.60	M_0		8.7	11.4								
					M_N		8.2	10.0								
					$M_{0,max}$		24.6	29.0								
					M_{max}		24.6	29.0								
					n_{eto}		-	-								
12H35-	7.5	3525	5.7	2.80	M_0			7.0	11.4	11.4	11.4					
					M_N			6.6	7.5	7.5	7.5					
					$M_{0,max}$			20.1	25.8	29.0	29.0					
					M_{max}			20.1	25.8	29.0	29.0					
					n_{eto}			-	-	-	-					

► I... [A], M... [Nm], n... [r/min], P... [kW]



Selection tables, Servo Drives 9400 HighLine

Non-ventilated motors

► The data applies to a mains connection voltage of 3 x 400 V and an inverter switching frequency of 4 kHz.

					E94A□□	E0024	E0034	E0044	E0074	E0094	E0134	E0174	E0244	E0324	E0474	E0594
					I_N	1.9	3.1	5.0	8.8	11.7	16.3	20.6	29.4	38.4	47.0	59.0
					$I_{0,max}$	6.0	10.0	16.0	21.0	28.0	39.0	49.5	58.8	76.8	94.0	118.0
MCS	**M_N**	**n_N**	**I_N**	**P_N**	I_{max}	6.0	10.0	16.0	21.0	28.0	39.0	49.5	58.8	76.8	94.0	118.0
12L20-	13.5	1950	5.9	2.80	M_0			12.1	15.0	15.0	15.0					
					M_N			11.4	13.5	13.5	13.5					
					$M_{0,max}$			35.5	44.6	55.7	56.4					
					M_{max}			35.5	44.6	55.7	56.4					
					n_{eto}			-	-	-	-					
12L41-	11.0	4050	10.2	4.70	M_0				10.6	14.0	15.0	15.0	15.0			
					M_N				9.5	11.0	11.0	11.0	11.0			
					$M_{0,max}$				24.4	31.6	41.9	50.8	56.4			
					M_{max}				24.4	31.6	41.9	50.8	56.4			
					n_{eto}				-	-	-	-	-			
14D15-	9.2	1500	4.5	1.45	M_0			11.0	11.0							
					M_N			9.2	9.2							
					$M_{0,max}$			28.3	29.0							
					M_{max}			28.3	29.0							
					n_{eto}			-	-							
14D36-	7.5	3600	7.5	2.80	M_0				9.6	11.0	11.0					
					M_N				7.5	7.5	7.5					
					$M_{0,max}$				20.2	25.6	29.0					
					M_{max}				20.2	25.6	29.0					
					n_{eto}				-	-	-					
14H15-	16.0	1500	6.6	2.50	M_0			12.4	21.0	21.0	21.0					
					M_N			12.1	16.0	16.0	16.0					
					$M_{0,max}$			37.1	46.6	54.8	54.8					
					M_{max}			37.1	46.6	54.8	54.8					
					n_{eto}			-	-	-	-					
14H32-	14.0	3225	11.9	4.70	M_0					14.4	20.3	21.0	21.0			
					M_N					13.6	14.0	14.0	14.0			
					$M_{0,max}$					33.0	43.9	53.2	54.8			
					M_{max}					33.0	43.9	53.2	54.8			
					n_{eto}					-	-	-	-			
14L15-	23.0	1500	9.7	3.60	M_0				20.5	27.1	28.0					
					M_N				20.9	23.0	23.0					
					$M_{0,max}$				48.0	61.4	77.1					
					M_{max}				48.0	61.4	77.1					
					n_{eto}				-	-	-					
14L32-	17.2	3225	15.0	5.80	M_0						19.0	24.0	28.0	28.0	28.0	
					M_N						17.2	17.2	17.2	17.2	17.2	
					$M_{0,max}$						45.0	55.3	63.9	77.1	77.1	
					M_{max}						45.0	55.3	63.9	77.1	77.1	
					n_{eto}						-	-	-	-	-	
14P14-	30.0	1350	10.8	4.20	M_0				26.7	35.2	37.0	37.0				
					M_N				24.4	30.0	30.0	30.0				
					$M_{0,max}$				56.1	71.7	93.3	105.1				
					M_{max}				56.1	71.7	93.3	105.1				
					n_{eto}				-	-	-	-				

► I... [A], M... [Nm], n... [r/min], P... [kW]



Selection tables, Servo Drives 9400 HighLine

Non-ventilated motors

► The data applies to a mains connection voltage of 3 x 400 V and an inverter switching frequency of 4 kHz.

					E94A□□	E0024	E0034	E0044	E0074	E0094	E0134	E0174	E0244	E0324	E0474	E0594
					I_N	1.9	3.1	5.0	8.8	11.7	16.3	20.6	29.4	38.4	47.0	59.0
					$I_{0,max}$	6.0	10.0	16.0	21.0	28.0	39.0	49.5	58.8	76.8	94.0	118.0
MCS	**M_N**	**n_N**	**I_N**	**P_N**	I_{max}	6.0	10.0	16.0	21.0	28.0	39.0	49.5	58.8	76.8	94.0	118.0
14P32-	21.0	3225	15.6	7.10	M_0						24.8	31.4	37.0	37.0	37.0	
					M_N						21.0	21.0	21.0	21.0	21.0	
					$M_{0,max}$						52.5	64.6	74.7	92.2	105.1	
					M_{max}						52.5	64.6	74.7	92.2	105.1	
					n_{eto}						-	-	-	-	-	
19F14-	27.0	1425	8.6	4.00	M_0				28.4	32.0	32.0					
					M_N				27.0	27.0	27.0					
					$M_{0,max}$				62.1	78.9	86.0					
					M_{max}				62.1	78.9	86.0					
					n_{eto}				-	-	-					
19F30-	21.0	3000	14.0	6.60	M_0						26.3	32.0	32.0	32.0		
					M_N						21.0	21.0	21.0	21.0		
					$M_{0,max}$						56.6	70.2	81.6	86.0		
					M_{max}						56.6	70.2	81.6	86.0		
					n_{eto}						-	-	-	-		
19J14-	40.0	1425	12.3	6.00	M_0					38.9	51.0	51.0				
					M_N					37.7	40.0	40.0				
					$M_{0,max}$					85.0	114.4	129.0				
					M_{max}					85.0	114.4	129.0				
					n_{eto}					-	-	-				
19J30-	29.0	3000	18.5	9.10	M_0						27.3	34.4	49.2	51.0	51.0	
					M_N						25.6	29.0	29.0	29.0	29.0	
					$M_{0,max}$						60.8	75.9	88.9	112.9	129.0	
					M_{max}						60.8	75.9	88.9	112.9	129.0	
					n_{eto}						-	-	-	-	-	
19P14-	51.0	1350	14.3	7.20	M_0						59.6	64.0	64.0	64.0		
					M_N						51.0	51.0	51.0	51.0		
					$M_{0,max}$						128.4	159.9	186.6	190.0		
					M_{max}						128.4	159.9	186.6	190.0		
					n_{eto}						-	-	-	-		
19P30-	32.0	3000	19.0	10.00	M_0						29.9	37.8	53.9	64.0	64.0	64.0
					M_N						27.5	32.0	32.0	32.0	32.0	32.0
					$M_{0,max}$						65.7	83.6	98.5	126.6	152.5	187.2
					M_{max}						65.7	83.6	98.5	126.6	152.5	187.2
					n_{eto}						-	-	-	-	-	-

► I... [A], M... [Nm], n... [r/min], P... [kW]



Selection tables, Servo Drives 9400 HighLine

Non-ventilated motors

► The data applies to a mains connection voltage of 3x230V and an inverter switching frequency of 4 kHz.

					E94A□□	E0024	E0034	E0044	E0074	E0094	E0134	E0174	E0244	E0324
					I_N	1.9	3.1	5.0	8.8	11.7	16.3	20.6	29.4	38.4
					$I_{0,max}$	6.0	10.0	16.0	21.0	28.0	39.0	49.5	58.8	76.8
MCS	**M_N**	**n_N**	**I_N**	**P_N**	I_{max}	6.0	10.0	16.0	21.0	28.0	39.0	49.5	58.8	76.8
06C41L	0.6	4050	2.6	0.25	M_0	0.6	0.8							
					M_N	0.5	0.6							
					$M_{0,max}$	1.5	2.3							
					M_{max}	1.5	2.3							
					n_{eto}	-	-							
06C60L	0.5	6000	4.0	0.31	M_0		0.6	0.8	0.8					
					M_N		0.4	0.5	0.5					
					$M_{0,max}$		1.5	2.2	2.4					
					M_{max}		1.5	2.2	2.4					
					n_{eto}		-	-	-					
06F41L	1.2	4050	2.9	0.51	M_0	1.0	1.5	1.5						
					M_N	0.8	1.2	1.2						
					$M_{0,max}$	2.7	4.2	4.4						
					M_{max}	2.7	4.2	4.4						
					n_{eto}	-	-	-						
06F60L	0.9	6000	3.8	0.57	M_0		1.2	1.5	1.5					
					M_N		0.8	0.9	0.9					
					$M_{0,max}$		3.1	4.3	4.4					
					M_{max}		3.1	4.3	4.4					
					n_{eto}		-	-	-					
06I41L	1.5	4050	3.2	0.64	M_0		2.0	2.0						
					M_N		1.5	1.5						
					$M_{0,max}$		5.4	6.2						
					M_{max}		5.4	6.2						
					n_{eto}		-	-						
06I60L	1.2	6000	3.8	0.75	M_0		1.5	2.0						
					M_N		1.0	1.2						
					$M_{0,max}$		4.4	6.2						
					M_{max}		4.4	6.2						
					n_{eto}		-	-						
09D41L	2.3	4050	4.6	1.00	M_0			3.1	3.3					
					M_N			2.3	2.3					
					$M_{0,max}$			8.0	9.5					
					M_{max}			8.0	9.5					
					n_{eto}			-	-					
09D60L	1.8	6000	7.0	1.10	M_0				2.8	3.3	3.3			
					M_N				1.8	1.8	1.8			
					$M_{0,max}$				5.7	7.3	9.5			
					M_{max}				5.7	7.3	9.5			
					n_{eto}				-	-	-			
09F38L	3.1	3750	5.0	1.20	M_0			3.5	4.2	4.2	4.2			
					M_N			3.1	3.1	3.1	3.1			
					$M_{0,max}$			9.8	12.0	13.8	15.0			
					M_{max}			9.8	12.0	13.8	15.0			
					n_{eto}			-	-	-	-			

► I... [A], M... [Nm], n... [r/min], P... [kW]



Selection tables, Servo Drives 9400 HighLine

Non-ventilated motors

► The data applies to a mains connection voltage of 3x230V and an inverter switching frequency of 4 kHz.

					E94A□□	E0024	E0034	E0044	E0074	E0094	E0134	E0174	E0244	E0324
					I_N	1.9	3.1	5.0	8.8	11.7	16.3	20.6	29.4	38.4
					$I_{0,max}$	6.0	10.0	16.0	21.0	28.0	39.0	49.5	58.8	76.8
MCS	M_N	n_N	I_N	P_N	I_{max}	6.0	10.0	16.0	21.0	28.0	39.0	49.5	58.8	76.8
09F60L	2.4	6000	7.9	1.50	M_0				3.5	4.2	4.2	4.2	4.2	
					M_N				2.4	2.4	2.4	2.4	2.4	
					$M_{0,max}$				7.8	9.8	12.6	14.5	15.0	
					M_{max}				7.8	9.8	12.6	14.5	15.0	
					n_{eto}				-	-	-	-	-	
09H41L	3.8	4050	6.8	1.60	M_0				5.5	5.3	5.5	5.5		
					M_N				3.8	3.0	3.8	3.8		
					$M_{0,max}$				12.4	11.8	19.7	20.0		
					M_{max}				12.4	11.8	19.7	20.0		
					n_{eto}				-	-	-	-		
09H60L	3.0	6000	8.0	1.90	M_0				4.0	5.5	5.5	5.5	5.5	
					M_N				3.0	3.8	3.0	3.0	3.0	
					$M_{0,max}$				9.2	15.6	15.4	18.3	20.0	
					M_{max}				9.2	15.6	15.4	18.3	20.0	
					n_{eto}				-	-	-	-	-	
09L41L	4.5	4050	8.4	1.90	M_0				5.3	7.0	7.5	7.5	7.5	7.5
					M_N				4.5	4.5	4.5	4.5	4.5	4.5
					$M_{0,max}$				11.9	15.5	20.9	25.8	29.7	31.9
					M_{max}				11.9	15.5	20.9	25.8	29.7	31.9
					n_{eto}				-	-	-	-	-	-
12D20L	5.5	1950	5.2	1.10	M_0			5.9	6.4					
					M_N			5.3	5.5					
					$M_{0,max}$			14.9	17.7					
					M_{max}			14.9	17.7					
					n_{eto}			-	-					
12D41L	4.3	4050	8.8	1.80	M_0				5.3	6.4	6.4	6.4		
					M_N				4.3	4.3	4.3	4.3		
					$M_{0,max}$				10.6	13.6	17.7	17.9		
					M_{max}				10.6	13.6	17.7	17.9		
					n_{eto}				-	-	-	-		
12H15L	10.0	1500	7.6	1.60	M_0				11.4	11.4	10.0			
					M_N				10.0	10.0	11.4			
					$M_{0,max}$				25.8	29.0	29.0			
					M_{max}				25.8	29.0	29.0			
					n_{eto}				-	-	-			
12H30L	8.0	3000	10.5	2.50	M_0				7.4	9.8	11.4			
					M_N				6.7	8.0	8.0			
					$M_{0,max}$				16.4	21.5	29.0			
					M_{max}				16.4	21.5	29.0			
					n_{eto}				-	-	-			
12L20L	13.5	1950	11.8	2.80	M_0				10.6	14.0	15.0	15.0	15.0	
					M_N				10.1	13.3	13.5	13.5	13.5	
					$M_{0,max}$				24.4	31.5	41.8	50.5	56.0	
					M_{max}				24.4	31.5	41.8	50.5	56.0	
					n_{eto}				-	-	-	-	-	

► I... [A], M... [Nm], n... [r/min], P... [kW]



Selection tables, Servo Drives 9400 HighLine

Forced ventilated IP54 motors

► The data applies to a mains connection voltage of 3 x 400 V and an inverter switching frequency of 4 kHz.

					E94A□□	E0024	E0034	E0044	E0074	E0094	E0134	E0174	E0244	E0324	E0474	E0594
					I_N	1.9	3.1	5.0	8.8	11.7	16.3	20.6	29.4	38.4	47.0	59.0
					$I_{0,max}$	6.0	10.0	16.0	21.0	28.0	39.0	49.5	58.8	76.8	94.0	118.0
MCS	**M_N**	**n_N**	**I_N**	**P_N**	I_{max}	6.0	10.0	16.0	21.0	28.0	39.0	49.5	58.8	76.8	94.0	118.0
12D17-	7.0	1650	3.0	1.20	M_0	4.4	7.3									
					M_N	4.0	7.0									
					$M_{0,max}$	11.8	17.7									
					M_{max}	11.8	17.7									
					n_{eto}	-	-									
12D35-	6.0	3525	5.6	2.20	M_0			5.9	7.5							
					M_N			5.4	6.0							
					$M_{0,max}$			14.7	17.7							
					M_{max}			14.7	17.7							
					n_{eto}			-	-							
12H14-	12.0	1350	4.1	1.70	M_0		8.7	12.8								
					M_N		8.2	12.0								
					$M_{0,max}$		24.6	29.0								
					M_{max}		24.6	29.0								
					n_{eto}		-	-								
12H34-	10.5	3375	7.5	3.70	M_0			7.0	12.8	12.8	12.8					
					M_N			6.6	10.5	10.5	10.5					
					$M_{0,max}$			20.1	25.8	29.0	29.0					
					M_{max}			20.1	25.8	29.0	29.0					
					n_{eto}			-	-	-	-					
12L17-	17.0	1650	6.7	2.90	M_0			12.1	19.0	19.0	19.0					
					M_N			11.4	17.0	17.0	17.0					
					$M_{0,max}$			35.5	44.6	55.7	56.4					
					M_{max}			35.5	44.6	55.7	56.4					
					n_{eto}			-	-	-	-					
12L39-	14.0	3900	11.7	5.70	M_0				10.6	15.3	19.0	19.0	19.0			
					M_N				9.5	13.9	14.0	14.0	14.0			
					$M_{0,max}$				24.4	31.6	41.9	50.8	56.4			
					M_{max}				24.4	31.6	41.9	50.8	56.4			
					n_{eto}				-	-	-	-	-			
14D14-	12.0	1350	5.4	1.70	M_0			11.0	12.5							
					M_N			11.0	12.0							
					$M_{0,max}$			28.3	29.0							
					M_{max}			28.3	29.0							
					n_{eto}			-	-							
14D30-	10.5	3000	9.7	3.30	M_0				9.6	12.5	12.5					
					M_N				9.5	10.5	10.5					
					$M_{0,max}$				20.2	25.6	29.0					
					M_{max}				20.2	25.6	29.0					
					n_{eto}				-	-	-					
14H12-	23.5	1200	8.3	3.00	M_0			12.4	24.1	25.5	25.5					
					M_N			12.1	23.5	23.5	23.5					
					$M_{0,max}$			37.1	46.6	54.8	54.8					
					M_{max}			37.1	46.6	54.8	54.8					
					n_{eto}			-	-	-	-					

► I... [A], M... [Nm], n... [r/min], P... [kW]



Selection tables, Servo Drives 9400 HighLine

Forced ventilated IP54 motors

► The data applies to a mains connection voltage of 3 x 400 V and an inverter switching frequency of 4 kHz.

					E94A□□	E0024	E0034	E0044	E0074	E0094	E0134	E0174	E0244	E0324	E0474	E0594
					I_N	1.9	3.1	5.0	8.8	11.7	16.3	20.6	29.4	38.4	47.0	59.0
					$I_{0,max}$	6.0	10.0	16.0	21.0	28.0	39.0	49.5	58.8	76.8	94.0	118.0
MCS	**M_N**	**n_N**	**I_N**	**P_N**	I_{max}	6.0	10.0	16.0	21.0	28.0	39.0	49.5	58.8	76.8	94.0	118.0
14H28-	20.5	2775	15.0	6.00	M_0					16.1	20.5	25.5	25.5			
					M_N					15.9	20.5	20.5	20.5			
					$M_{0,max}$					33.0	43.9	53.2	54.8			
					M_{max}					33.0	43.9	53.2	54.8			
					n_{eto}					-	-	-	-			
14L14-	30.5	1350	11.8	4.30	M_0				20.5	30.0	34.5					
					M_N				20.5	30.0	30.5					
					$M_{0,max}$				48.0	61.4	77.1					
					M_{max}				48.0	61.4	77.1					
					n_{eto}				-	-	-					
14L30-	25.5	3000	20.8	8.00	M_0						21.0	26.6	34.5	34.5	34.5	
					M_N						20.0	25.3	25.5	25.5	25.5	
					$M_{0,max}$						45.0	55.3	63.9	77.1	77.1	
					M_{max}						45.0	55.3	63.9	77.1	77.1	
					n_{eto}						-	-	-	-	-	
14P11-	42.0	1050	13.4	4.60	M_0				26.7	36.4	43.5	43.5				
					M_N				24.4	36.4	42.0	42.0				
					$M_{0,max}$				56.1	71.7	93.3	105.1				
					M_{max}				56.1	71.7	93.3	105.1				
					n_{eto}				-	-	-	-				
14P26-	33.0	2625	21.9	9.10	M_0						24.8	31.4	43.5	43.5	43.5	
					M_N						24.6	31.0	33.0	33.0	33.0	
					$M_{0,max}$						52.5	64.6	74.7	92.2	105.1	
					M_{max}						52.5	64.6	74.7	92.2	105.1	
					n_{eto}						-	-	-	-	-	
19F12-	38.0	1200	11.3	4.80	M_0				29.9	39.5	41.5					
					M_N				29.3	38.0	38.0					
					$M_{0,max}$				62.1	78.9	86.0					
					M_{max}				62.1	78.9	86.0					
					n_{eto}				-	-	-					
19F29-	32.5	2850	20.1	9.70	M_0						26.3	34.9	41.5	41.5		
					M_N						26.0	32.5	32.5	32.5		
					$M_{0,max}$						56.6	70.2	81.6	86.0		
					M_{max}						56.6	70.2	81.6	86.0		
					n_{eto}						-	-	-	-		
19J12-	62.5	1200	18.3	7.90	M_0						56.6	70.5				
					M_N						55.7	62.5				
					$M_{0,max}$						114.4	129.0				
					M_{max}						114.4	129.0				
					n_{eto}						-	-				
19J29-	50.5	2850	31.0	15.10	M_0								49.2	66.7	70.5	
					M_N								47.9	50.5	50.5	
					$M_{0,max}$								88.9	112.9	129.0	
					M_{max}								88.9	112.9	129.0	
					n_{eto}								-	-	-	

► I... [A], M... [Nm], n... [r/min], P... [kW]



Selection tables, Servo Drives 9400 HighLine

Forced ventilated IP54 motors

► The data applies to a mains connection voltage of 3 x 400 V and an inverter switching frequency of 4 kHz.

					E94A□□	E0024	E0034	E0044	E0074	E0094	E0134	E0174	E0244	E0324	E0474	E0594
					I_N	1.9	3.1	5.0	8.8	11.7	16.3	20.6	29.4	38.4	47.0	59.0
					$I_{0,max}$	6.0	10.0	16.0	21.0	28.0	39.0	49.5	58.8	76.8	94.0	118.0
MCS	**M_N**	**n_N**	**I_N**	**P_N**	I_{max}	6.0	10.0	16.0	21.0	28.0	39.0	49.5	58.8	76.8	94.0	118.0
19P12-	72.0	1200	21.3	9.00	M_0							79.1	86.0	86.0		
					M_N							69.6	72.0	72.0		
					$M_{0,max}$							159.9	186.6	190.0		
					M_{max}							159.9	186.6	190.0		
					n_{eto}							-	-	-		
19P29-	53.0	2850	29.5	15.80	M_0								56.5	73.9	86.0	86.0
					M_N								52.8	53.0	53.0	53.0
					$M_{0,max}$								98.5	126.6	152.5	187.2
					M_{max}								98.5	126.6	152.5	187.2
					n_{eto}								-	-	-	-

► I... [A], M... [Nm], n... [r/min], P... [kW]





Selection tables, Inverter Drives 8400 TopLine

Non-ventilated motors

► The data applies to a mains connection voltage of 3 x 400 V and an inverter switching frequency of 8 kHz.

					E84AVTC	□3714	□5514	□7514	□1124	□1524	□2224	□3024
					I_N	1.3	1.8	2.4	3.2	3.9	5.9	7.3
					$I_{0,max}$	2.0	2.7	3.6	4.8	5.9	8.4	11.0
MCS	M_N	n_N	I_N	P_N	I_{max}	2.6	3.6	4.8	6.4	7.8	11.2	14.6
06C41-	0.6	4050	1.3	0.25	M_0	0.8	0.8	0.8	0.8	0.8		
					M_N	0.6	0.6	0.6	0.6	0.6		
					$M_{0,max}$	1.4	1.7	2.3	2.4	2.4		
					M_{max}	1.4	1.7	2.3	2.4	2.4		
					n_{eto}	-	-	-	-	-		
06C60-	0.5	6000	2.4	0.31	M_0			0.8	0.8	0.8	0.8	0.8
					M_N			0.5	0.5	0.5	0.5	0.5
					$M_{0,max}$			1.3	1.6	2.0	2.4	2.4
					M_{max}			1.3	1.6	2.0	2.4	2.4
					n_{eto}			-	-	-	-	-
06F41-	1.2	4050	1.5	0.51	M_0	1.3	1.5	1.5	1.5	1.5		
					M_N	1.0	1.2	1.2	1.2	1.2		
					$M_{0,max}$	2.3	3.2	4.3	4.4	4.4		
					M_{max}	2.3	3.2	4.3	4.4	4.4		
					n_{eto}	-	-	-	-	-		
06F60-	0.9	6000	2.5	0.57	M_0			1.2	1.5	1.5	1.5	1.5
					M_N			0.9	0.9	0.9	0.9	0.9
					$M_{0,max}$			2.1	3.3	4.0	4.4	4.4
					M_{max}			2.1	3.3	4.0	4.4	4.4
					n_{eto}			-	-	-	-	-
06I41-	1.5	4050	1.6	0.64	M_0	1.6	2.0	2.0	2.0	2.0		
					M_N	1.2	1.5	1.5	1.5	1.5		
					$M_{0,max}$	2.9	4.0	5.3	6.2	6.2		
					M_{max}	2.9	4.0	5.3	6.2	6.2		
					n_{eto}	-	-	-	-	-		
06I60-	1.2	6000	2.9	0.75	M_0				2.0	2.0	2.0	2.0
					M_N				1.2	1.2	1.2	1.2
					$M_{0,max}$				3.6	4.4	5.7	5.7
					M_{max}				3.6	4.4	5.7	5.7
					n_{eto}				-	-	-	-
09D41-	2.3	4050	2.3	1.00	M_0		2.2	3.1	3.3	3.3	3.3	3.3
					M_N		1.7	2.3	2.3	2.3	2.3	2.3
					$M_{0,max}$		4.0	5.3	6.7	8.2	9.4	9.4
					M_{max}		4.0	5.3	6.7	8.2	9.4	9.4
					n_{eto}		-	-	-	-	-	-
09D60-	1.8	6000	3.8	1.10	M_0				2.0	2.4	3.3	3.3
					M_N				1.5	1.8	1.8	1.8
					$M_{0,max}$				3.5	4.2	6.3	7.8
					M_{max}				3.5	4.2	6.3	7.8
					n_{eto}				-	-	-	-
09F38-	3.1	3750	2.5	1.20	M_0			3.4	4.2	4.2	4.2	4.2
					M_N			3.0	3.1	3.1	3.1	3.1
					$M_{0,max}$			6.6	8.4	10.2	12.0	12.0
					M_{max}			6.6	8.4	10.2	12.0	12.0
					n_{eto}			-	-	-	-	-

► I... [A], M... [Nm], n... [r/min], P... [kW]



Selection tables, Inverter Drives 8400 TopLine

Non-ventilated motors

► The data applies to a mains connection voltage of 3 x 400 V and an inverter switching frequency of 8 kHz.

□4024	□5524	□7524	□1134	□1534	□1834	□2234	□3034	E84AVTC					
9.5	13.0	16.5	23.5	32.0	39.0	47.0	61.0	I_N					
14.3	19.5	26.4	32.9	43.2	60.0	70.5	91.5	$I_{0,max}$					
19.0	26.0	33.0	47.0	64.0	78.0	94.0	122.0	I_{max}	P_N	I_N	n_N	M_N	MCS
								M_0	0.25	1.3	4050	0.6	06C41-
								M_N					
								$M_{0,max}$					
								M_{max}					
								n_{eto}					
								M_0	0.31	2.4	6000	0.5	06C60-
								M_N					
								$M_{0,max}$					
								M_{max}					
								n_{eto}					
								M_0	0.51	1.5	4050	1.2	06F41-
								M_N					
								$M_{0,max}$					
								M_{max}					
								n_{eto}					
								M_0	0.57	2.5	6000	0.9	06F60-
								M_N					
								$M_{0,max}$					
								M_{max}					
								n_{eto}					
								M_0	0.64	1.6	4050	1.5	06I41-
								M_N					
								$M_{0,max}$					
								M_{max}					
								n_{eto}					
								M_0	0.75	2.9	6000	1.2	06I60-
								M_N					
								$M_{0,max}$					
								M_{max}					
								n_{eto}					
								M_0	1.00	2.3	4050	2.3	09D41-
								M_N					
								$M_{0,max}$					
								M_{max}					
								n_{eto}					
3.3	3.3							M_0	1.10	3.8	6000	1.8	09D60-
1.8	1.8							M_N					
9.1	9.3							$M_{0,max}$					
9.1	9.3							M_{max}					
-	-							n_{eto}					
								M_0	1.20	2.5	3750	3.1	09F38-
								M_N					
								$M_{0,max}$					
								M_{max}					
								n_{eto}					

► I... [A], M... [Nm], n... [r/min], P... [kW]



Selection tables, Inverter Drives 8400 TopLine

Non-ventilated motors

► The data applies to a mains connection voltage of 3 x 400 V and an inverter switching frequency of 8 kHz.

					E84AVTC	□3714	□5514	□7514	□1124	□1524	□2224	□3024
					I_N	1.3	1.8	2.4	3.2	3.9	5.9	7.3
					$I_{0,max}$	2.0	2.7	3.6	4.8	5.9	8.4	11.0
MCS	M_N	n_N	I_N	P_N	I_{max}	2.6	3.6	4.8	6.4	7.8	11.2	14.6
09F60-	2.4	6000	4.5	1.50	M_0						4.2	4.2
					M_N						2.4	2.4
					$M_{0,max}$						7.8	9.6
					M_{max}						7.8	9.6
					n_{eto}						-	-
09H41-	3.8	4050	3.4	1.60	M_0				4.7	5.0	5.5	5.5
					M_N				3.6	3.8	3.8	3.8
					$M_{0,max}$				8.1	9.9	14.0	17.4
					M_{max}				8.1	9.9	14.0	17.4
					n_{eto}				-	-	-	-
09H60-	3.0	6000	6.0	1.90	M_0						4.4	4.5
					M_N						3.0	3.0
					$M_{0,max}$						7.5	9.3
					M_{max}						7.5	9.3
					n_{eto}						-	-
09L41-	4.5	4050	4.2	1.90	M_0				3.9	4.7	7.5	7.5
					M_N				3.4	4.2	4.5	4.5
					$M_{0,max}$				7.3	8.9	13.1	16.3
					M_{max}				7.3	8.9	13.1	16.3
					n_{eto}				-	-	-	-
09L51-	3.6	5100	6.9	1.90	M_0							4.2
					M_N							3.6
					$M_{0,max}$							8.3
					M_{max}							8.3
					n_{eto}							-
12D20-	5.5	1950	2.6	1.10	M_0			5.7	6.4	6.4	6.4	6.4
					M_N			5.1	5.5	5.5	5.5	5.5
					$M_{0,max}$			9.6	12.6	15.3	17.7	17.7
					M_{max}			9.6	12.6	15.3	17.7	17.7
					n_{eto}			-	-	-	-	-
12D41-	4.3	4050	4.5	1.80	M_0				3.8	4.6	6.4	6.4
					M_N				3.0	3.7	4.3	4.3
					$M_{0,max}$				6.4	7.8	11.4	14.0
					M_{max}				6.4	7.8	11.4	14.0
					n_{eto}				-	-	-	-
12H15-	10.0	1500	3.8	1.60	M_0				9.2	10.9	11.4	11.4
					M_N				8.4	10.0	10.0	10.0
					$M_{0,max}$				16.4	20.0	29.0	29.0
					M_{max}				16.4	20.0	29.0	29.0
					n_{eto}				-	-	-	-
12H35-	7.5	3525	5.7	2.80	M_0						9.8	9.8
					M_N						7.5	7.5
					$M_{0,max}$						15.2	18.8
					M_{max}						15.2	18.8
					n_{eto}						-	-

► I... [A], M... [Nm], n... [r/min], P... [kW]



Selection tables, Inverter Drives 8400 TopLine

Non-ventilated motors

► The data applies to a mains connection voltage of 3 x 400 V and an inverter switching frequency of 8 kHz.

□4024	□5524	□7524	□1134	□1534	□1834	□2234	□3034	E84AVTC					
9.5	13.0	16.5	23.5	32.0	39.0	47.0	61.0	I_N					
14.3	19.5	26.4	32.9	43.2	60.0	70.5	91.5	$I_{0,max}$					
19.0	26.0	33.0	47.0	64.0	78.0	94.0	122.0	I_{max}	P_N	I_N	n_N	M_N	MCS
4.2	4.2							M_0					
2.4	2.4							M_N					
11.1	11.4							$M_{0,max}$	1.50	4.5	6000	2.4	09F60-
11.1	11.4							M_{max}					
-	-							n_{eto}					
5.5	5.5							M_0					
3.8	3.8							M_N					
19.6	20.1							$M_{0,max}$	1.60	3.4	4050	3.8	09H41-
19.6	20.1							M_{max}					
-	-							n_{eto}					
5.5	5.5							M_0					
3.0	3.0							M_N					
11.4	11.7							$M_{0,max}$	1.90	6.0	6000	3.0	09H60-
11.4	11.7							M_{max}					
-	-							n_{eto}					
7.5	7.5							M_0					
4.5	4.5							M_N					
20.3	20.8							$M_{0,max}$	1.90	4.2	4050	4.5	09L41-
20.3	20.8							M_{max}					
-	-							n_{eto}					
7.5	7.5	7.5	7.5					M_0					
3.6	3.6	3.6	3.6					M_N					
10.8	19.1	19.1	19.1					$M_{0,max}$	1.90	6.9	5100	3.6	09L51-
10.8	19.1	19.1	19.1					M_{max}					
-	-	-	-					n_{eto}					
								M_0					
								M_N					
								$M_{0,max}$	1.10	2.6	1950	5.5	12D20-
								M_{max}					
								n_{eto}					
6.4	6.4							M_0					
4.3	4.3							M_N					
16.9	17.3							$M_{0,max}$	1.80	4.5	4050	4.3	12D41-
16.9	17.3							M_{max}					
-	-							n_{eto}					
11.4	11.4							M_0					
10.0	10.0							M_N					
28.3	29.0							$M_{0,max}$	1.60	3.8	1500	10.0	12H15-
28.3	29.0							M_{max}					
-	-							n_{eto}					
11.4	11.4							M_0					
7.5	7.5							M_N					
23.5	24.1							$M_{0,max}$	2.80	5.7	3525	7.5	12H35-
23.5	24.1							M_{max}					
-	-							n_{eto}					

► I... [A], M... [Nm], n... [r/min], P... [kW]



Selection tables, Inverter Drives 8400 TopLine

Non-ventilated motors

► The data applies to a mains connection voltage of 3 x 400 V and an inverter switching frequency of 8 kHz.

					E84AVTC	□3714	□5514	□7514	□1124	□1524	□2224	□3024
					I_N	1.3	1.8	2.4	3.2	3.9	5.9	7.3
					$I_{0,max}$	2.0	2.7	3.6	4.8	5.9	8.4	11.0
MCS	M_N	n_N	I_N	P_N	I_{max}	2.6	3.6	4.8	6.4	7.8	11.2	14.6
12L20-	13.5	1950	5.9	2.80	M_0						15.0	15.0
					M_N						13.5	13.5
					$M_{0,max}$						27.4	33.9
					M_{max}						27.4	33.9
					n_{eto}						-	-
12L41-	11.0	4050	10.2	4.70	M_0							
					M_N							
					$M_{0,max}$							
					M_{max}							
					n_{eto}							
14D15-	9.2	1500	4.5	1.45	M_0				7.0	8.5	11.0	11.0
					M_N				6.6	8.0	9.2	9.2
					$M_{0,max}$				13.1	16.0	22.7	28.1
					M_{max}				13.1	16.0	22.7	28.1
					n_{eto}				-	-	-	-
14D36-	7.5	3600	7.5	2.80	M_0							8.0
					M_N							7.3
					$M_{0,max}$							15.2
					M_{max}							15.2
					n_{eto}							-
14H15-	16.0	1500	6.6	2.50	M_0							17.3
					M_N							16.0
					$M_{0,max}$							35.3
					M_{max}							35.3
					n_{eto}							-
14H32-	14.0	3225	11.9	4.70	M_0							
					M_N							
					$M_{0,max}$							
					M_{max}							
					n_{eto}							
14L15-	23.0	1500	9.7	3.60	M_0							
					M_N							
					$M_{0,max}$							
					M_{max}							
					n_{eto}							
14L32-	17.2	3225	15.0	5.80	M_0							
					M_N							
					$M_{0,max}$							
					M_{max}							
					n_{eto}							
14P14-	30.0	1350	10.8	4.20	M_0							
					M_N							
					$M_{0,max}$							
					M_{max}							
					n_{eto}							

► I... [A], M... [Nm], n... [r/min], P... [kW]



Selection tables, Inverter Drives 8400 TopLine

Non-ventilated motors

► The data applies to a mains connection voltage of 3 x 400 V and an inverter switching frequency of 8 kHz.

□4024	□5524	□7524	□1134	□1534	□1834	□2234	□3034	E84AVTC					
9.5	13.0	16.5	23.5	32.0	39.0	47.0	61.0	I_N					
14.3	19.5	26.4	32.9	43.2	60.0	70.5	91.5	$I_{0,max}$					
19.0	26.0	33.0	47.0	64.0	78.0	94.0	122.0	I_{max}	P_N	I_N	n_N	M_N	MCS
15.0	15.0							M_0	2.80	5.9	1950	13.5	12L20-
13.5	13.5							M_N					
40.8	41.9							$M_{0,max}$					
40.8	41.9							M_{max}					
-	-							n_{eto}					
14.0	15.0	15.0	15.0	15.0				M_0	4.70	10.2	4050	11.0	12L41-
10.2	11.0	11.0	11.0	11.0				M_N					
22.2	30.4	35.5	35.5	35.5				$M_{0,max}$					
22.2	30.4	49.6	49.6	49.6				M_{max}					
-	-	-	-	-				n_{eto}					
11.0	11.0							M_0	1.45	4.5	1500	9.2	14D15-
9.2	9.2							M_N					
28.3	29.0							$M_{0,max}$					
28.3	29.0							M_{max}					
-	-							n_{eto}					
11.0	11.0	11.0	11.0					M_0	2.80	7.5	3600	7.5	14D36-
7.5	7.5	7.5	7.5					M_N					
18.5	25.3	29.0	29.0					$M_{0,max}$					
18.5	22.2	22.2	22.2					M_{max}					
-	-	-	-					n_{eto}					
21.0	21.0							M_0	2.50	6.6	1500	16.0	14H15-
16.0	16.0							M_N					
42.8	43.9							$M_{0,max}$					
42.8	43.9							M_{max}					
-	-							n_{eto}					
12.9	16.2	21.0	21.0	21.0				M_0	4.70	11.9	3225	14.0	14H32-
11.2	14.0	14.0	14.0	14.0				M_N					
23.2	31.7	37.1	37.1	37.1				$M_{0,max}$					
23.2	31.7	51.9	51.9	51.9				M_{max}					
-	-	-	-	-				n_{eto}					
27.4	28.0	28.0	28.0					M_0	3.60	9.7	1500	23.0	14L15-
22.5	23.0	23.0	23.0					M_N					
43.8	52.9	52.9	52.9					$M_{0,max}$					
43.8	60.0	73.8	73.8					M_{max}					
-	-	-	-					n_{eto}					
	15.2	27.4	27.4	28.0	28.0	28.0		M_0	5.80	15.0	3225	17.2	14L32-
	14.9	17.2	17.2	17.2	17.2	17.2		M_N					
	31.3	39.7	52.9	52.9	52.9	52.9		$M_{0,max}$					
	31.3	57.6	73.9	73.9	73.9	73.9		M_{max}					
	-	-	-	-	-	-		n_{eto}					
32.5	37.0	37.0	37.0	37.0				M_0	4.20	10.8	1350	30.0	14P14-
26.4	30.0	30.0	30.0	30.0				M_N					
51.2	70.0	80.0	80.0	80.0				$M_{0,max}$					
51.2	70.0	105.1	105.1	105.1				M_{max}					
-	-	-	-	-				n_{eto}					

► I... [A], M... [Nm], n... [r/min], P... [kW]



Selection tables, Inverter Drives 8400 TopLine

Non-ventilated motors

► The data applies to a mains connection voltage of 3 x 400 V and an inverter switching frequency of 8 kHz.

					E84AVTC	□3714	□5514	□7514	□1124	□1524	□2224	□3024
					I_N	1.3	1.8	2.4	3.2	3.9	5.9	7.3
					$I_{0,max}$	2.0	2.7	3.6	4.8	5.9	8.4	11.0
MCS	M_N	n_N	I_N	P_N	I_{max}	2.6	3.6	4.8	6.4	7.8	11.2	14.6
14P32-	21.0	3225	15.6	7.10	M_0							
					M_N							
					$M_{0,max}$							
					M_{max}							
					n_{eto}							
19F14-	27.0	1425	8.6	4.00	M_0							23.6
					M_N							22.9
					$M_{0,max}$							45.9
					M_{max}							45.9
					n_{eto}							-
19F30-	21.0	3000	14.0	6.60	M_0							
					M_N							
					$M_{0,max}$							
					M_{max}							
					n_{eto}							
19J14-	40.0	1425	12.3	6.00	M_0							
					M_N							
					$M_{0,max}$							
					M_{max}							
					n_{eto}							
19J30-	29.0	3000	18.5	9.10	M_0							
					M_N							
					$M_{0,max}$							
					M_{max}							
					n_{eto}							
19P14-	51.0	1350	14.3	7.20	M_0							
					M_N							
					$M_{0,max}$							
					M_{max}							
					n_{eto}							
19P30-	32.0	3000	19.0	10.00	M_0							
					M_N							
					$M_{0,max}$							
					M_{max}							
					n_{eto}							

► I... [A], M... [Nm], n... [r/min], P... [kW]



Selection tables, Inverter Drives 8400 TopLine

Non-ventilated motors

► The data applies to a mains connection voltage of 3 x 400 V and an inverter switching frequency of 8 kHz.

□4024	□5524	□7524	□1134	□1534	□1834	□2234	□3034	E84AVTC					
9.5	13.0	16.5	23.5	32.0	39.0	47.0	61.0	I_N					
14.3	19.5	26.4	32.9	43.2	60.0	70.5	91.5	$I_{0,max}$					
19.0	26.0	33.0	47.0	64.0	78.0	94.0	122.0	I_{max}	P_N	I_N	n_N	M_N	MCS
	19.8	35.8	35.8	37.0	37.0	37.0		M_0					
	17.5	21.0	21.0	21.0	21.0	21.0		M_N					
	36.5	46.3	61.8	61.8	61.8	61.8		$M_{0,max}$	7.10	15.6	3225	21.0	14P32-
	36.5	67.3	86.4	86.4	86.4	86.4		M_{max}					
	-	-	-	-	-	-		n_{eto}					
32.0	32.0	32.0	32.0					M_0					
27.0	27.0	27.0	27.0					M_N					
56.7	68.3	68.3	68.3					$M_{0,max}$	4.00	8.6	1425	27.0	19F14-
56.7	77.6	86.0	86.0					M_{max}					
-	-	-	-					n_{eto}					
	21.0	32.0	32.0	32.0				M_0					
	19.5	21.0	21.0	21.0				M_N					
	47.2	47.2	47.2	47.2				$M_{0,max}$	6.60	14.0	3000	21.0	19F30-
	38.9	68.3	68.3	68.3				M_{max}					
	-	-	-	-				n_{eto}					
	43.6	51.0	51.0	51.0				M_0					
	40.0	40.0	40.0	40.0				M_N					
	81.1	96.0	96.0	96.0				$M_{0,max}$	6.00	12.3	1425	40.0	19J14-
	81.1	129.0	129.0	129.0				M_{max}					
	-	-	-	-				n_{eto}					
			39.3	51.0	51.0	51.0	51.0	M_0					
			29.0	29.0	29.0	29.0	29.0	M_N					
			73.6	79.5	79.5	79.5	79.5	$M_{0,max}$	9.10	18.5	3000	29.0	19J30-
			110.4	127.6	127.6	127.6	127.6	M_{max}					
			-	-	-	-	-	n_{eto}					
	47.5	64.0	64.0	64.0				M_0					
	46.4	51.0	51.0	51.0				M_N					
	92.7	106.7	106.7	106.7				$M_{0,max}$	7.20	14.3	1350	51.0	19P14-
	92.7	155.5	155.5	155.5				M_{max}					
	-	-	-	-				n_{eto}					
			43.1	58.7	64.0	64.0	64.0	M_0					
			32.0	32.0	32.0	32.0	32.0	M_N					
			79.2	87.6	87.6	87.6	87.6	$M_{0,max}$	10.00	19.0	3000	32.0	19P30-
			118.6	144.3	144.3	144.3	144.3	M_{max}					
			-	-	-	-	-	n_{eto}					

► I... [A], M... [Nm], n... [r/min], P... [kW]



Selection tables, Inverter Drives 8400 TopLine

Forced ventilated IP54 motors

► The data applies to a mains connection voltage of 3 x 400 V and an inverter switching frequency of 8 kHz.

					E84AVTC	□1124	□1524	□2224	□3024	□4024	□5524	□7524	□1134	□1534	□1834	□2234	□3034
					I_N	3.2	3.9	5.9	7.3	9.5	13.0	16.5	23.5	32.0	39.0	47.0	61.0
					$I_{0,max}$	4.8	5.9	8.4	11.0	14.3	19.5	26.4	32.9	43.2	60.0	70.5	91.5
MCS	**M_N**	**n_N**	**I_N**	**P_N**	I_{max}	6.4	7.8	11.2	14.6	19.0	26.0	33.0	47.0	64.0	78.0	94.0	122.0
12D17-	7.0	1650	3.0	1.20	M_0	7.5	7.5	7.5	7.5								
					M_N	7.0	7.0	7.0	7.0								
					$M_{0,max}$	12.6	15.3	17.7	17.7								
					M_{max}	12.6	15.3	17.7	17.7								
					n_{eto}	-	-	-	-								
12D35-	6.0	3525	5.6	2.20	M_0		4.6	7.5	7.5	7.5	7.5						
					M_N		3.7	6.0	6.0	6.0	6.0						
					$M_{0,max}$		7.8	11.4	14.0	16.9	17.3						
					M_{max}		7.8	11.4	14.0	16.9	17.3						
					n_{eto}		-	-	-	-	-						
12H14-	12.0	1350	4.1	1.70	M_0	8.9	10.9	12.8	12.8	12.8	12.8						
					M_N	8.5	10.3	12.0	12.0	12.0	12.0						
					$M_{0,max}$	16.4	20.0	29.0	29.0	28.3	29.0						
					M_{max}	16.4	20.0	29.0	29.0	28.3	29.0						
					n_{eto}	-	-	-	-	-	-						
12H34-	10.5	3375	7.5	3.70	M_0				10.2	12.8	12.8						
					M_N				10.0	10.5	10.5						
					$M_{0,max}$				18.8	23.5	24.1						
					M_{max}				18.8	23.5	24.1						
					n_{eto}				-	-	-						
12L17-	17.0	1650	6.7	2.90	M_0				18.5	19.0	19.0						
					M_N				17.0	17.0	17.0						
					$M_{0,max}$				33.9	40.8	41.9						
					M_{max}				33.9	40.8	41.9						
					n_{eto}				-	-	-						
12L39-	14.0	3900	11.7	5.70	M_0					17.2	17.2	19.0	19.0	19.0			
					M_N					14.0	14.0	14.0	14.0	14.0			
					$M_{0,max}$					22.2	30.4	35.5	35.5	35.5			
					M_{max}					22.2	30.4	49.6	49.6	49.6			
					n_{eto}					-	-	-	-	-			
14D14-	12.0	1350	5.4	1.70	M_0		8.5	12.5	12.5	12.5	12.5						
					M_N		8.0	12.0	12.0	12.0	12.0						
					$M_{0,max}$		16.0	22.7	28.1	28.3	29.0						
					M_{max}		16.0	22.7	28.1	28.3	29.0						
					n_{eto}		-	-	-	-	-						
14D30-	10.5	3000	9.7	3.30	M_0				7.7	12.2	12.5	12.5	12.5				
					M_N				7.0	9.8	10.0	10.0	10.0				
					$M_{0,max}$				15.2	18.5	25.3	29.0	29.0				
					M_{max}				15.2	18.5	22.2	22.2	22.2				
					n_{eto}				-	-	-	-	-				
14H12-	23.5	1200	8.3	3.00	M_0				18.0	25.5	25.5						
					M_N				17.9	23.5	23.5						
					$M_{0,max}$				35.3	42.8	43.9						
					M_{max}				35.3	42.8	43.9						
					n_{eto}				-	-	-						

► I... [A], M... [Nm], n... [r/min], P... [kW]



Selection tables, Inverter Drives 8400 TopLine

Forced ventilated IP54 motors

► The data applies to a mains connection voltage of 3 x 400 V and an inverter switching frequency of 8 kHz.

					E84AVTC	□1124	□1524	□2224	□3024	□4024	□5524	□7524	□1134	□1534	□1834	□2234	□3034
					I_N	3.2	3.9	5.9	7.3	9.5	13.0	16.5	23.5	32.0	39.0	47.0	61.0
					$I_{0,max}$	4.8	5.9	8.4	11.0	14.3	19.5	26.4	32.9	43.2	60.0	70.5	91.5
MCS	M_N	n_N	I_N	P_N	I_{max}	6.4	7.8	11.2	14.6	19.0	26.0	33.0	47.0	64.0	78.0	94.0	122.0
14H28-	20.5	2775	15.0	6.00	M_0						16.2	25.5	25.5	25.5			
					M_N						16.1	20.5	20.5	20.5			
					$M_{0,max}$						31.7	37.1	37.1	37.1			
					M_{max}						31.7	51.9	51.9	51.9			
					n_{eto}						-	-	-	-			
14L14-	30.5	1350	11.8	4.30	M_0					26.9	33.4	34.5	34.5				
					M_N					24.6	30.5	30.5	30.5				
					$M_{0,max}$					43.8	52.9	52.9	52.9				
					M_{max}					43.8	60.0	73.8	73.8				
					n_{eto}					-	-	-	-				
14L30-	25.5	3000	20.8	8.00	M_0								27.4	34.5	34.5	34.5	
					M_N								25.5	25.5	25.5	25.5	
					$M_{0,max}$								52.9	52.9	52.9	52.9	
					M_{max}								73.9	73.9	73.9	73.9	
					n_{eto}								-	-	-	-	
14P11-	42.0	1050	13.4	4.60	M_0						38.9	43.5	43.5	43.5			
					M_N						38.8	42.0	42.0	42.0			
					$M_{0,max}$						70.0	80.0	80.0	80.0			
					M_{max}						70.0	105.1	105.1	105.1			
					n_{eto}						-	-	-	-			
14P26-	33.0	2625	21.9	9.10	M_0								35.8	43.5	43.5	43.5	
					M_N								33.0	33.0	33.0	33.0	
					$M_{0,max}$								66.0	86.4	86.4	86.4	
					M_{max}								86.4	86.4	86.4	86.4	
					n_{eto}								-	-	-	-	
19F12-	38.0	1200	11.3	4.80	M_0				23.6	34.9	41.5	41.5	41.5				
					M_N				22.9	31.9	38.0	38.0	38.0				
					$M_{0,max}$				45.9	56.7	68.3	68.3	68.3				
					M_{max}				45.9	56.7	77.6	86.0	86.0				
					n_{eto}				-	-	-	-	-				
19F29-	32.5	2850	20.1	9.70	M_0								39.9	41.5			
					M_N								32.5	32.5			
					$M_{0,max}$								47.2	47.2			
					M_{max}								68.3	68.3			
					n_{eto}								-	-			
19J12-	62.5	1200	18.3	7.90	M_0						43.6		70.5	70.5			
					M_N						43.4		62.5	62.5			
					$M_{0,max}$						81.1		96.0	96.0			
					M_{max}						81.1		129.0	129.0			
					n_{eto}						-		-	-			
19J29-	50.5	2850	31.0	15.10	M_0									55.5	70.5	70.5	70.5
					M_N									50.5	50.5	50.5	50.5
					$M_{0,max}$									87.6	87.6	87.6	87.6
					M_{max}									127.6	127.6	127.6	127.6
					n_{eto}									-	-	-	-

► I... [A], M... [Nm], n... [r/min], P... [kW]



Selection tables, Inverter Drives 8400 TopLine

Forced ventilated IP54 motors

► The data applies to a mains connection voltage of 3 x 400 V and an inverter switching frequency of 8 kHz.

					E84AVTC	□1124	□1524	□2224	□3024	□4024	□5524	□7524	□1134	□1534	□1834	□2234	□3034
					I_N	3.2	3.9	5.9	7.3	9.5	13.0	16.5	23.5	32.0	39.0	47.0	61.0
					$I_{0,max}$	4.8	5.9	8.4	11.0	14.3	19.5	26.4	32.9	43.2	60.0	70.5	91.5
MCS	**M_N**	**n_N**	**I_N**	**P_N**	I_{max}	6.4	7.8	11.2	14.6	19.0	26.0	33.0	47.0	64.0	78.0	94.0	122.0
19P12-	72.0	1200	21.3	9.00	M_0						47.5		86.0	86.0			
					M_N						46.4		72.0	72.0			
					$M_{0,max}$						92.7		106.7	106.7			
					M_{max}						92.7		155.5	155.5			
					n_{eto}						-		-	-			
19P29-	53.0	2850	29.5	15.80	M_0									58.7	86.0	86.0	86.0
					M_N									53.0	53.0	53.0	53.0
					$M_{0,max}$									87.6	87.6	87.6	87.6
					M_{max}									144.3	144.3	144.3	144.3
					n_{eto}									-	-	-	-

► I... [A], M... [Nm], n... [r/min], P... [kW]



Selection tables, Servo Drives ECS

Non-ventilated motors

► The data applies to a mains connection voltage of 3 x 400 V and an inverter switching frequency of 4 kHz.

					ECS□□	004C□B	008C□B	016C□B	032C□B	048C□B	064C□B
					I_N	2.0	4.0	8.0	12.7	17.0	20.0
					$I_{0,max}$	2.3	4.6	9.1	18.1	27.2	36.3
MCS	**M_N**	**n_N**	**I_N**	**P_N**	I_{max}	4.0	8.0	16.0	32.0	48.0	64.0
06C41-	0.6	4050	1.3	0.25	M_0	0.8					
					M_N	0.6					
					$M_{0,max}$	1.2					
					M_{max}	1.9					
					n_{eto}	2747					
06C60-	0.5	6000	2.4	0.31	M_0	0.6	0.8				
					M_N	0.4	0.5				
					$M_{0,max}$	0.6	1.2				
					M_{max}	1.0	1.9				
					n_{eto}	7000	6814				
06F41-	1.2	4050	1.5	0.51	M_0	1.5					
					M_N	1.2					
					$M_{0,max}$	2.0					
					M_{max}	3.6					
					n_{eto}	1902					
06F60-	0.9	6000	2.5	0.57	M_0	1.0	1.5				
					M_N	0.7	0.9				
					$M_{0,max}$	1.0	2.0				
					M_{max}	1.8	3.7				
					n_{eto}	7000	4602				
06I41-	1.5	4050	1.6	0.64	M_0	2.0	2.0				
					M_N	1.5	1.5				
					$M_{0,max}$	2.6	5.0				
					M_{max}	4.4	6.2				
					n_{eto}	1898	1384				
06I60-	1.2	6000	2.9	0.75	M_0	1.2	2.0	2.0			
					M_N	0.8	1.2	1.2			
					$M_{0,max}$	1.3	2.6	5.2			
					M_{max}	2.2	4.7	6.2			
					n_{eto}	6407	4200	3157			
09D41-	2.3	4050	2.3	1.00	M_0		3.3	3.3			
					M_N		2.3	2.3			
					$M_{0,max}$		5.0	8.8			
					M_{max}		8.0	9.4			
					n_{eto}		2361	2008			
09D60-	1.8	6000	3.8	1.10	M_0		2.5	3.3			
					M_N		1.8	1.8			
					$M_{0,max}$		2.5	4.9			
					M_{max}		4.4	8.0			
					n_{eto}		7000	5217			
09F38-	3.1	3750	2.5	1.20	M_0		4.2	4.2			
					M_N		3.1	3.1			
					$M_{0,max}$		6.2	10.8			
					M_{max}		9.8	14.9			
					n_{eto}		2589	1737			

► I... [A], M... [Nm], n... [r/min], P... [kW]



Selection tables, Servo Drives ECS

Non-ventilated motors

► The data applies to a mains connection voltage of 3 x 400 V and an inverter switching frequency of 4 kHz.

					ECS□□	004C□B	008C□B	016C□B	032C□B	048C□B	064C□B
					I_N	2.0	4.0	8.0	12.7	17.0	20.0
					$I_{0,max}$	2.3	4.6	9.1	18.1	27.2	36.3
MCS	**M_N**	**n_N**	**I_N**	**P_N**	I_{max}	4.0	8.0	16.0	32.0	48.0	64.0
09F60-	2.4	6000	4.5	1.50	M_0		2.8	4.2	4.2		
					M_N		2.1	2.4	2.4		
					$M_{0,max}$		3.2	6.1	10.8		
					M_{max}		5.4	9.8	14.9		
					n_{eto}		7000	5906	3715		
09H41-	3.8	4050	3.4	1.60	M_0		5.2	5.5			
					M_N		3.8	3.8			
					$M_{0,max}$		5.9	11.1			
					M_{max}		9.9	17.5			
					n_{eto}		3675	2231			
09H60-	3.0	6000	6.0	1.90	M_0			5.2	5.5	5.5	
					M_N			3.0	3.0	3.0	
					$M_{0,max}$			5.9	11.0	15.5	
					M_{max}			9.9	17.5	20.4	
					n_{eto}			7000	5061	4375	
09L41-	4.5	4050	4.2	1.90	M_0		4.8	7.5	7.5		
					M_N		4.3	4.5	4.5		
					$M_{0,max}$		5.2	10.3	19.5		
					M_{max}		9.1	17.4	31.9		
					n_{eto}		4450	3188	1878		
09L51-	3.6	5100	6.9	1.90	M_0			4.8	7.5	7.5	7.5
					M_N			3.6	3.6	3.6	3.6
					$M_{0,max}$			5.2	10.3	15.1	19.6
					M_{max}			9.1	17.5	25.1	31.9
					n_{eto}			7000	7000	5647	4076
12D20-	5.5	1950	2.6	1.10	M_0	4.7	6.4	6.4			
					M_N	4.2	5.5	5.5			
					$M_{0,max}$	4.6	9.1	17.0			
					M_{max}	8.0	15.3	17.7			
					n_{eto}	1730	1089	919			
12D41-	4.3	4050	4.5	1.80	M_0		4.7	6.4			
					M_N		3.8	4.3			
					$M_{0,max}$		4.6	8.8			
					M_{max}		7.8	14.7			
					n_{eto}		3902	2433			
12H15-	10.0	1500	3.8	1.60	M_0		11.2	11.4			
					M_N		10.0	10.0			
					$M_{0,max}$		11.9	22.6			
					M_{max}		20.1	29.0			
					n_{eto}		1220	918			
12H35-	7.5	3525	5.7	2.80	M_0		5.6	11.2	11.4		
					M_N		5.3	7.5	7.5		
					$M_{0,max}$		6.0	11.8	22.5		
					M_{max}		10.4	20.1	29.0		
					n_{eto}		3850	2838	2092		

► I... [A], M... [Nm], n... [r/min], P... [kW]



Selection tables, Servo Drives ECS

Non-ventilated motors

► The data applies to a mains connection voltage of 3 x 400 V and an inverter switching frequency of 4 kHz.

					ECS□□	004C□B	008C□B	016C□B	032C□B	048C□B	064C□B
					I_N	2.0	4.0	8.0	12.7	17.0	20.0
					$I_{0,max}$	2.3	4.6	9.1	18.1	27.2	36.3
MCS	**M_N**	**n_N**	**I_N**	**P_N**	I_{max}	4.0	8.0	16.0	32.0	48.0	64.0
12L20-	13.5	1950	5.9	2.80	M_0			15.0	15.0		
					M_N			13.5	13.5		
					$M_{0,max}$			21.4	39.4		
					M_{max}			35.5	56.4		
					n_{eto}			1324	863		
12L41-	11.0	4050	10.2	4.70	M_0			9.7	15.0	15.0	15.0
					M_N			8.6	11.0	11.0	11.0
					$M_{0,max}$			10.8	21.3	30.8	39.5
					M_{max}			19.0	35.5	49.6	56.4
					n_{eto}			4450	3013	2236	1907
14D15-	9.2	1500	4.5	1.45	M_0		8.8	11.0			
					M_N		8.2	9.2			
					$M_{0,max}$		9.6	17.9			
					M_{max}		15.9	28.3			
					n_{eto}		1141	689			
14D36-	7.5	3600	7.5	2.80	M_0			8.8	11.0		
					M_N			7.5	7.5		
					$M_{0,max}$			9.5	17.8		
					M_{max}			15.9	28.3		
					n_{eto}			2496	1614		
14H15-	16.0	1500	6.6	2.50	M_0			19.8	21.0		
					M_N			16.0	16.0		
					$M_{0,max}$			22.3	41.2		
					M_{max}			37.1	54.8		
					n_{eto}			920	667		
14H32-	14.0	3225	11.9	4.70	M_0				15.8	21.0	21.0
					M_N				14.0	14.0	14.0
					$M_{0,max}$				22.2	32.1	41.3
					M_{max}				37.1	51.9	54.8
					n_{eto}				1953	1471	1409
14L15-	23.0	1500	9.7	3.60	M_0			18.7	28.0	28.0	
					M_N			19.0	23.0	23.0	
					$M_{0,max}$			21.9	42.1	59.9	
					M_{max}			37.6	68.5	77.1	
					n_{eto}			1284	828	767	
14L32-	17.2	3225	15.0	5.80	M_0				14.8	19.8	23.3
					M_N				14.6	17.2	17.2
					$M_{0,max}$				21.8	32.4	42.2
					M_{max}				37.6	53.9	68.5
					n_{eto}				2801	2096	1757
14P14-	30.0	1350	10.8	4.20	M_0				37.0	37.0	37.0
					M_N				30.0	30.0	30.0
					$M_{0,max}$				49.1	70.0	88.4
					M_{max}				80.0	105.1	105.1
					n_{eto}				710	573	573

► I... [A], M... [Nm], n... [r/min], P... [kW]



Selection tables, Servo Drives ECS

Non-ventilated motors

► The data applies to a mains connection voltage of 3 x 400 V and an inverter switching frequency of 4 kHz.

					ECS□□	004C□B	008C□B	016C□B	032C□B	048C□B	064C□B
					I_N	2.0	4.0	8.0	12.7	17.0	20.0
					$I_{0,max}$	2.3	4.6	9.1	18.1	27.2	36.3
MCS	**M_N**	**n_N**	**I_N**	**P_N**	I_{max}	4.0	8.0	16.0	32.0	48.0	64.0
14P32-	21.0	3225	15.6	7.10	M_0				19.3	25.9	30.5
					M_N				17.1	21.0	21.0
					$M_{0,max}$				25.4	37.9	49.3
					M_{max}				43.9	63.0	80.0
					n_{eto}				2469	1829	1495
19F14-	27.0	1425	8.6	4.00	M_0			25.9	32.0		
					M_N			25.1	27.0		
					$M_{0,max}$			28.6	54.6		
					M_{max}			48.9	86.0		
					n_{eto}			1204	746		
19F30-	21.0	3000	14.0	6.60	M_0				20.5	27.5	32.0
					M_N				19.0	21.0	21.0
					$M_{0,max}$				27.2	40.5	53.0
					M_{max}				47.2	68.3	86.0
					n_{eto}				2774	2033	1653
19J14-	40.0	1425	12.3	6.00	M_0				42.6	51.0	
					M_N				40.0	40.0	
					$M_{0,max}$				58.9	82.8	
					M_{max}				96.0	129.0	
					n_{eto}				1063	839	
19J30-	29.0	3000	18.5	9.10	M_0					28.4	33.4
					M_N					26.6	29.0
					$M_{0,max}$					42.6	56.9
					M_{max}					73.8	96.0
					n_{eto}					2850	2323
19P14-	51.0	1350	14.3	7.20	M_0				46.4	62.2	64.0
					M_N				45.3	51.0	51.0
					$M_{0,max}$				64.6	91.5	120.1
					M_{max}				106.7	155.5	190.0
					n_{eto}				1227	996	870
19P30-	32.0	3000	19.0	10.00	M_0					31.2	36.7
					M_N					28.6	32.0
					$M_{0,max}$					45.8	61.1
					M_{max}					81.2	106.7
					n_{eto}					2938	2715

► I... [A], M... [Nm], n... [r/min], P... [kW]



Selection tables, Servo Drives ECS

Non-ventilated motors

► The data applies to a mains connection voltage of 3x230V and an inverter switching frequency of 4 kHz.

					ECS□□	004C□B	008C□B	016C□B	032C□B	048C□B	064C□B
					I_N	2.0	4.0	8.0	12.7	17.0	20.0
					$I_{0,max}$	2.3	4.6	9.1	18.1	27.2	36.3
MCS	M_N	n_N	I_N	P_N	I_{max}	4.0	8.0	16.0	32.0	48.0	64.0
06C41L	0.6	4050	2.6	0.25	M_0	0.6	0.8				
					M_N	0.5	0.6				
					$M_{0,max}$	0.6	1.1				
					M_{max}	1.0	1.9				
					n_{eto}	6298	2835				
06C60L	0.5	6000	4.0	0.31	M_0		0.7	0.8			
					M_N		0.5	0.5			
					$M_{0,max}$		0.7	1.3			
					M_{max}		1.2	2.2			
					n_{eto}		7000	1149			
06F41L	1.2	4050	2.9	0.51	M_0	1.0	1.5	1.5			
					M_N	0.8	1.2	1.2			
					$M_{0,max}$	1.2	2.1	3.9			
					M_{max}	1.9	3.5	4.4			
					n_{eto}	3838	2118	2831			
06F60L	0.9	6000	3.8	0.57	M_0		1.5	1.5			
					M_N		0.9	0.9			
					$M_{0,max}$		1.5	2.9			
					M_{max}		2.6	4.3			
					n_{eto}		6138	3182			
06I41L	1.5	4050	3.2	0.64	M_0	1.3	2.0	2.0			
					M_N	1.0	1.5	1.5			
					$M_{0,max}$	1.4	2.8	5.0			
					M_{max}	2.4	4.4	6.2			
					n_{eto}	3549	1947	2831			
06I60L	1.2	6000	3.8	0.75	M_0		1.9	2.0			
					M_N		1.2	1.2			
					$M_{0,max}$		2.1	4.1			
					M_{max}		3.6	6.2			
					n_{eto}		3417	1149			
09D41L	2.3	4050	4.6	1.00	M_0		2.5	3.3	3.3		
					M_N		2.0	2.3	2.3		
					$M_{0,max}$		2.5	4.9	8.8		
					M_{max}		4.4	8.0	9.5		
					n_{eto}		4091	2547	2170		
09D60L	1.8	6000	7.0	1.10	M_0			2.6	3.3	3.3	
					M_N			1.8	1.8	1.8	
					$M_{0,max}$			2.6	5.0	7.1	
					M_{max}			4.5	8.1	9.5	
					n_{eto}			7000	5373	4626	
09F38L	3.1	3750	5.0	1.20	M_0			4.2	4.2		
					M_N			3.1	3.1		
					$M_{0,max}$			6.1	10.8		
					M_{max}			9.8	15.0		
					n_{eto}			1149	1951		

► I... [A], M... [Nm], n... [r/min], P... [kW]



Selection tables, Servo Drives ECS

Non-ventilated motors

► The data applies to a mains connection voltage of 3x230V and an inverter switching frequency of 4 kHz.

					ECS□□	004C□B	008C□B	016C□B	032C□B	048C□B	064C□B
					I_N	2.0	4.0	8.0	12.7	17.0	20.0
					$I_{0,max}$	2.3	4.6	9.1	18.1	27.2	36.3
MCS	**M_N**	**n_N**	**I_N**	**P_N**	I_{max}	4.0	8.0	16.0	32.0	48.0	64.0
09F60L	2.4	6000	7.9	1.50	M_0			3.2	4.2	4.2	4.2
					M_N			2.4	2.4	2.4	2.4
					$M_{0,max}$			3.6	6.8	9.6	11.9
					M_{max}			6.1	10.9	14.3	15.0
					n_{eto}			6985	3448	2612	2397
09H41L	3.8	4050	6.8	1.60	M_0			5.2	5.5	5.5	
					M_N			3.8	3.8	3.8	
					$M_{0,max}$			5.9	11.0	15.3	
					M_{max}			9.9	17.2	20.0	
					n_{eto}			1149	2138	1852	
09H60L	3.0	6000	8.0	1.90	M_0			3.7	5.5	5.5	5.5
					M_N			3.0	3.0	3.0	3.0
					$M_{0,max}$			4.1	8.0	11.5	14.5
					M_{max}			7.2	13.2	17.9	20.0
					n_{eto}			1149	4081	2984	2695
09L41L	4.5	4050	8.4	1.90	M_0			4.8	7.5	7.5	7.5
					M_N			4.3	4.5	4.5	4.5
					$M_{0,max}$			5.2	10.3	15.1	19.6
					M_{max}			9.1	17.5	25.1	31.9
					n_{eto}			4562	3243	2497	1909
12D20L	5.5	1950	5.2	1.10	M_0		4.7	6.4			
					M_N		4.2	5.5			
					$M_{0,max}$		4.6	9.0			
					M_{max}		8.0	14.9			
					n_{eto}		1878	1181			
12D41L	4.3	4050	8.8	1.80	M_0			4.8	6.4	6.4	
					M_N			3.9	4.3	4.3	
					$M_{0,max}$			4.6	9.2	13.3	
					M_{max}			8.1	15.2	17.9	
					n_{eto}			4102	2535	2187	
12H15L	10.0	1500	7.6	1.60	M_0			11.2	11.4		
					M_N			10.0	10.0		
					$M_{0,max}$			11.8	22.5		
					M_{max}			20.1	29.0		
					n_{eto}			1098	827		
12H30L	8.0	3000	10.5	2.50	M_0			6.8	10.7	11.4	
					M_N			6.1	8.0	8.0	
					$M_{0,max}$			7.2	14.3	20.9	
					M_{max}			12.7	24.3	29.0	
					n_{eto}			2831	1849	1591	
12L20L	13.5	1950	11.8	2.80	M_0				15.0	15.0	15.0
					M_N				13.5	13.5	13.5
					$M_{0,max}$				21.3	30.7	39.4
					M_{max}				35.4	49.3	56.0
					n_{eto}				1307	1004	866

► I... [A], M... [Nm], n... [r/min], P... [kW]



Selection tables, Servo Drives ECS

Forced ventilated IP54 motors

► The data applies to a mains connection voltage of 3 x 400 V and an inverter switching frequency of 4 kHz.

					ECS□□	004C□B	008C□B	016C□B	032C□B	048C□B	064C□B
					I_N	2.0	4.0	8.0	12.7	17.0	20.0
					$I_{0,max}$	2.3	4.6	9.1	18.1	27.2	36.3
MCS	M_N	n_N	I_N	P_N	I_{max}	4.0	8.0	16.0	32.0	48.0	64.0
12D17-	7.0	1650	3.0	1.20	M_0	4.7	7.5	7.5			
					M_N	4.2	7.0	7.0			
					$M_{0,max}$	4.6	9.1	17.0			
					M_{max}	8.0	15.3	17.7			
					n_{eto}	1730	1089	919			
12D35-	6.0	3525	5.6	2.20	M_0		4.7	7.5			
					M_N		3.8	6.0			
					$M_{0,max}$		4.6	8.8			
					M_{max}		7.8	14.7			
					n_{eto}		3902	2433			
12H14-	12.0	1350	4.1	1.70	M_0		11.2	12.8			
					M_N		10.6	12.0			
					$M_{0,max}$		11.9	22.6			
					M_{max}		20.1	29.0			
					n_{eto}		1220	918			
12H34-	10.5	3375	7.5	3.70	M_0		5.6	11.2	12.8		
					M_N		5.3	10.0	7.5		
					$M_{0,max}$		6.0	11.8	22.5		
					M_{max}		10.4	20.1	29.0		
					n_{eto}		3850	2838	2092		
12L17-	17.0	1650	6.7	2.90	M_0			19.0	19.0		
					M_N			17.0	17.0		
					$M_{0,max}$			21.4	39.4		
					M_{max}			35.5	56.4		
					n_{eto}			1324	863		
12L39-	14.0	3900	11.7	5.70	M_0			9.7	16.7	19.0	19.0
					M_N			8.6	14.0	14.0	14.0
					$M_{0,max}$			10.8	21.3	30.8	39.5
					M_{max}			19.0	35.5	49.6	56.4
					n_{eto}			4450	3013	2236	1907
14D14-	12.0	1350	5.4	1.70	M_0		8.8	12.5			
					M_N		8.2	12.0			
					$M_{0,max}$		9.6	17.9			
					M_{max}		15.9	28.3			
					n_{eto}		1141	689			
14D30-	10.5	3000	9.7	3.30	M_0			8.8	11.4		
					M_N			8.6	9.7		
					$M_{0,max}$			9.5	17.8		
					M_{max}			15.9	28.3		
					n_{eto}			2496	1614		
14H12-	23.5	1200	8.3	3.00	M_0			19.8	25.5		
					M_N			19.6	23.5		
					$M_{0,max}$			22.3	41.2		
					M_{max}			37.1	54.8		
					n_{eto}			920	667		

► I... [A], M... [Nm], n... [r/min], P... [kW]



Selection tables, Servo Drives ECS

Forced ventilated IP54 motors

► The data applies to a mains connection voltage of 3 x 400 V and an inverter switching frequency of 4 kHz.

					ECS□□	004C□B	008C□B	016C□B	032C□B	048C□B	064C□B
					I_N	2.0	4.0	8.0	12.7	17.0	20.0
					$I_{0,max}$	2.3	4.6	9.1	18.1	27.2	36.3
MCS	M_N	n_N	I_N	P_N	I_{max}	4.0	8.0	16.0	32.0	48.0	64.0
14H28-	20.5	2775	15.0	6.00	M_0				15.8	23.5	25.5
					M_N				15.6	20.5	20.5
					$M_{0,max}$				22.2	32.1	41.3
					M_{max}				37.1	51.9	54.8
					n_{eto}				1953	1471	1409
14L14-	30.5	1350	11.8	4.30	M_0			18.7	32.7	34.5	
					M_N			19.0	30.5	30.5	
					$M_{0,max}$			21.9	42.1	59.9	
					M_{max}			37.6	68.5	77.1	
					n_{eto}			1284	828	767	
14L30-	25.5	3000	20.8	8.00	M_0					19.8	23.3
					M_N					19.7	23.3
					$M_{0,max}$					32.4	42.2
					M_{max}					53.9	68.5
					n_{eto}					2096	1757
14P11-	42.0	1050	13.4	4.60	M_0				39.1	43.5	43.5
					M_N				38.9	42.0	42.0
					$M_{0,max}$				49.1	70.0	88.4
					M_{max}				80.0	105.1	105.1
					n_{eto}				710	573	573
14P26-	33.0	2625	21.9	9.10	M_0					25.9	30.5
					M_N					25.6	30.1
					$M_{0,max}$					37.9	49.3
					M_{max}					63.0	80.0
					n_{eto}					1829	1495
19F12-	38.0	1200	11.3	4.80	M_0			25.9	41.5		
					M_N			25.1	38.0		
					$M_{0,max}$			28.6	54.6		
					M_{max}			48.9	86.0		
					n_{eto}			1204	746		
19F29-	32.5	2850	20.1	9.70	M_0					27.5	33.9
					M_N					27.4	32.5
					$M_{0,max}$					40.5	53.0
					M_{max}					68.3	86.0
					n_{eto}					2033	1653
19J12-	62.5	1200	18.3	7.90	M_0					59.0	69.4
					M_N					58.1	62.5
					$M_{0,max}$					82.8	82.8
					M_{max}					129.0	129.0
					n_{eto}					839	839
19J29-	50.5	2850	31.0	15.10	M_0						34.3
					M_N						32.6
					$M_{0,max}$						56.9
					M_{max}						96.0
					n_{eto}						2323

► I... [A], M... [Nm], n... [r/min], P... [kW]



Selection tables, Servo Drives ECS

Forced ventilated IP54 motors

► The data applies to a mains connection voltage of 3 x 400 V and an inverter switching frequency of 4 kHz.

					ECS□□	004C□B	008C□B	016C□B	032C□B	048C□B	064C□B
					I_N	2.0	4.0	8.0	12.7	17.0	20.0
					$I_{0,max}$	2.3	4.6	9.1	18.1	27.2	36.3
MCS	**M_N**	**n_N**	**I_N**	**P_N**	I_{max}	4.0	8.0	16.0	32.0	48.0	64.0
19P12-	72.0	1200	21.3	9.00	M_0					62.2	76.8
					M_N					57.5	67.6
					$M_{0,max}$					91.5	120.1
					M_{max}					155.5	190.0
					n_{eto}					996	870
19P29-	53.0	2850	29.5	15.80	M_0						36.7
					M_N						35.9
					$M_{0,max}$						61.1
					M_{max}						106.7
					n_{eto}						2715

► I... [A], M... [Nm], n... [r/min], P... [kW]



Selection tables, Servo Inverter 9300

Non-ventilated motors

► The data applies to a mains connection voltage of 3 x 400 V and an inverter switching frequency of 8 kHz.

					EVS	9321-E□	9322-E□	9323-E□	9324-E□	9325-E□	9326-E□	9327-E□	9328-E□	9329-E□
					I_N	1.5	2.5	3.9	7.0	13.0	23.5	32.0	47.0	59.0
					$I_{0,max}$	2.3	3.8	5.9	10.5	19.5	23.5	32.0	47.0	52.0
MCS	M_N	n_N	I_N	P_N	I_{max}	2.3	3.8	5.9	10.5	19.5	35.3	48.0	70.5	88.5
06C41-	0.6	4050	1.3	0.25	M_0	0.8	0.8	0.8						
					M_N	0.6	0.6	0.6						
					$M_{0,max}$	1.2	1.8	2.4						
					M_{max}	1.2	1.8	2.4						
					n_{eto}	4635	2871	2019						
06C60-	0.5	6000	2.4	0.31	M_0		0.8	0.8	0.8					
					M_N		0.5	0.5	0.5					
					$M_{0,max}$		1.0	1.5	2.4					
					M_{max}		1.0	1.5	2.4					
					n_{eto}		7000	7000	5368					
06F41-	1.2	4050	1.5	0.51	M_0	1.5	1.5	1.5						
					M_N	1.2	1.2	1.2						
					$M_{0,max}$	2.0	3.4	4.4						
					M_{max}	2.0	3.4	4.4						
					n_{eto}	2819	1973	1562						
06F60-	0.9	6000	2.5	0.57	M_0		1.3	1.5	1.5					
					M_N		0.9	0.9	0.9					
					$M_{0,max}$		1.7	3.0	4.4					
					M_{max}		1.7	3.0	4.4					
					n_{eto}		7000	5714	3773					
06I41-	1.5	4050	1.6	0.64	M_0	1.8	2.0	2.0						
					M_N	1.4	1.5	1.5						
					$M_{0,max}$	2.6	4.2	6.2						
					M_{max}	2.6	4.2	6.2						
					n_{eto}	2994	1980	1384						
06I60-	1.2	6000	2.9	0.75	M_0		1.5	2.0	2.0					
					M_N		1.0	1.2	1.2					
					$M_{0,max}$		2.1	3.3	5.7					
					M_{max}		2.1	3.3	5.7					
					n_{eto}		7000	5486	3414					
09D41-	2.3	4050	2.3	1.00	M_0		3.1	3.3	3.3					
					M_N		2.3	2.3	2.3					
					$M_{0,max}$		4.2	6.2	9.4					
					M_{max}		4.2	6.2	9.4					
					n_{eto}		4895	2937	2008					
09D60-	1.8	6000	3.8	1.10	M_0			2.4	3.3	3.3				
					M_N			1.8	1.8	1.8				
					$M_{0,max}$			3.2	5.6	9.3				
					M_{max}			3.2	5.6	9.3				
					n_{eto}			7000	7000	4492				
09F38-	3.1	3750	2.5	1.20	M_0		3.5	4.2	4.2					
					M_N		3.1	3.1	3.1					
					$M_{0,max}$		5.2	7.7	12.0					
					M_{max}		5.2	7.7	12.0					
					n_{eto}		4000	3250	2173					

► I... [A], M... [Nm], n... [r/min], P... [kW]



Selection tables, Servo Inverter 9300

Non-ventilated motors

► The data applies to a mains connection voltage of 3 x 400 V and an inverter switching frequency of 8 kHz.

					EVS	9321-E□	9322-E□	9323-E□	9324-E□	9325-E□	9326-E□	9327-E□	9328-E□	9329-E□
					I_N	1.5	2.5	3.9	7.0	13.0	23.5	32.0	47.0	59.0
					$I_{0,max}$	2.3	3.8	5.9	10.5	19.5	23.5	32.0	47.0	52.0
MCS	**M_N**	**n_N**	**I_N**	**P_N**	I_{max}	2.3	3.8	5.9	10.5	19.5	35.3	48.0	70.5	88.5
09F60-	2.4	6000	4.5	1.50	M_0				4.2	4.2				
					M_N				2.4	2.4				
					$M_{0,max}$				6.9	11.4				
					M_{max}				6.9	11.4				
					n_{eto}				7000	5035				
09H41-	3.8	4050	3.4	1.60	M_0			5.0	5.5	5.5				
					M_N			3.8	3.8	3.8				
					$M_{0,max}$			7.5	12.5	20.1				
					M_{max}			7.5	12.5	20.1				
					n_{eto}			4250	2977	1988				
09H60-	3.0	6000	6.0	1.90	M_0				4.5	5.5				
					M_N				3.0	3.0				
					$M_{0,max}$				6.7	11.7				
					M_{max}				6.7	11.7				
					n_{eto}				7000	7000				
09L41-	4.5	4050	4.2	1.90	M_0			4.7	7.5	7.5				
					M_N			4.2	4.5	4.5				
					$M_{0,max}$			6.7	11.7	20.8				
					M_{max}			6.7	11.7	20.8				
					n_{eto}			4450	4154	2796				
09L51-	3.6	5100	6.9	1.90	M_0				4.2	7.5	7.5			
					M_N				3.6	3.6	3.6			
					$M_{0,max}$				6.0	11.1	13.2			
					M_{max}				6.0	11.1	19.1			
					n_{eto}				7000	7000	7000			
12D20-	5.5	1950	2.6	1.10	M_0		5.9	6.4	6.4					
					M_N		5.3	5.5	5.5					
					$M_{0,max}$		7.6	11.6	17.7					
					M_{max}		7.6	11.6	17.7					
					n_{eto}		1790	1358	919					
12D41-	4.3	4050	4.5	1.80	M_0			4.6	6.4	6.4				
					M_N			3.7	4.3	4.3				
					$M_{0,max}$			5.9	10.1	17.3				
					M_{max}			5.9	10.1	17.3				
					n_{eto}			4344	3275	2116				
12H15-	10.0	1500	3.8	1.60	M_0			10.9	11.4	11.4				
					M_N			10.0	10.0	10.0				
					$M_{0,max}$			15.1	25.8	29.0				
					M_{max}			15.1	25.8	29.0				
					n_{eto}			1676	1013	918				
12H35-	7.5	3525	5.7	2.80	M_0				9.8	11.4				
					M_N				7.5	7.5				
					$M_{0,max}$				13.5	24.1				
					M_{max}				13.5	24.1				
					n_{eto}				3618	2447				

► I... [A], M... [Nm], n... [r/min], P... [kW]



Selection tables, Servo Inverter 9300

Non-ventilated motors

► The data applies to a mains connection voltage of 3 x 400 V and an inverter switching frequency of 8 kHz.

					EVS	9321-E□	9322-E□	9323-E□	9324-E□	9325-E□	9326-E□	9327-E□	9328-E□	9329-E□
					I_N	1.5	2.5	3.9	7.0	13.0	23.5	32.0	47.0	59.0
					$I_{0,max}$	2.3	3.8	5.9	10.5	19.5	23.5	32.0	47.0	52.0
MCS	M_N	n_N	I_N	P_N	I_{max}	2.3	3.8	5.9	10.5	19.5	35.3	48.0	70.5	88.5
12L20-	13.5	1950	5.9	2.80	M_0				15.0	15.0				
					M_N				13.5	13.5				
					$M_{0,max}$				24.4	41.9				
					M_{max}				24.4	41.9				
					n_{eto}				1718	1158				
12L41-	11.0	4050	10.2	4.70	M_0					15.0	15.0	15.0		
					M_N					11.0	11.0	11.0		
					$M_{0,max}$					22.8	27.0	35.5		
					M_{max}					22.8	38.5	49.6		
					n_{eto}					4287	2799	2236		
14D15-	9.2	1500	4.5	1.45	M_0			8.5	11.0	11.0				
					M_N			8.0	9.2	9.2				
					$M_{0,max}$			12.1	20.2	29.0				
					M_{max}			12.1	20.2	29.0				
					n_{eto}			1437	928	676				
14D36-	7.5	3600	7.5	2.80	M_0				7.7	11.0	11.0			
					M_N				7.0	7.5	7.5			
					$M_{0,max}$				10.9	19.0	22.2			
					M_{max}				10.9	19.0	29.0			
					n_{eto}				3479	2159	1593			
14H15-	16.0	1500	6.6	2.50	M_0				17.3	21.0				
					M_N				16.0	16.0				
					$M_{0,max}$				25.4	43.9				
					M_{max}				25.4	43.9				
					n_{eto}				1247	800				
14H32-	14.0	3225	11.9	4.70	M_0					16.2	21.0	21.0		
					M_N					14.0	14.0	14.0		
					$M_{0,max}$					23.8	28.2	37.1		
					M_{max}					23.8	40.2	51.9		
					n_{eto}					2875	1817	1471		
14L15-	23.0	1500	9.7	3.60	M_0					28.0	28.0			
					M_N					23.0	23.0			
					$M_{0,max}$					45.0	52.9			
					M_{max}					45.0	73.8			
					n_{eto}					1126	788			
14L32-	17.2	3225	15.0	5.80	M_0					15.2	27.4	28.0	28.0	
					M_N					14.9	17.2	17.2	17.2	
					$M_{0,max}$					23.5	28.3	37.6	52.9	
					M_{max}					23.5	41.0	53.9	73.9	
					n_{eto}					3953	2608	2096	1672	
14P14-	30.0	1350	10.8	4.20	M_0					37.0	37.0	37.0		
					M_N					30.0	30.0	30.0		
					$M_{0,max}$					52.5	61.8	80.0		
					M_{max}					52.5	86.3	105.1		
					n_{eto}					998	668	573		

► I... [A], M... [Nm], n... [r/min], P... [kW]



Selection tables, Servo Inverter 9300

Non-ventilated motors

► The data applies to a mains connection voltage of 3 x 400 V and an inverter switching frequency of 8 kHz.

					EVS	9321-E□	9322-E□	9323-E□	9324-E□	9325-E□	9326-E□	9327-E□	9328-E□	9329-E□
					I_N	1.5	2.5	3.9	7.0	13.0	23.5	32.0	47.0	59.0
					$I_{0,max}$	2.3	3.8	5.9	10.5	19.5	23.5	32.0	47.0	52.0
MCS	**M_N**	**n_N**	**I_N**	**P_N**	I_{max}	2.3	3.8	5.9	10.5	19.5	35.3	48.0	70.5	88.5
14P32-	21.0	3225	15.6	7.10	M_0					19.8	35.8	37.0	37.0	
					M_N					17.5	21.0	21.0	21.0	
					$M_{0,max}$					27.4	33.0	43.9	61.8	
					M_{max}					27.4	47.9	63.0	86.4	
					n_{eto}					3300	2299	1829	1404	
19F14-	27.0	1425	8.6	4.00	M_0				22.6	32.0	32.0			
					M_N				22.0	27.0	27.0			
					$M_{0,max}$				33.0	58.2	68.3			
					M_{max}				33.0	58.2	86.0			
					n_{eto}				1459	1056	746			
19F30-	21.0	3000	14.0	6.60	M_0					21.0	32.0	32.0		
					M_N					19.5	21.0	21.0		
					$M_{0,max}$					29.2	35.2	47.2		
					M_{max}					29.2	51.5	68.3		
					n_{eto}					3352	2573	2033		
19J14-	40.0	1425	12.3	6.00	M_0					43.6	51.0	51.0		
					M_N					40.0	40.0	40.0		
					$M_{0,max}$					60.8	72.4	96.0		
					M_{max}					60.8	104.5	129.0		
					n_{eto}					1376	996	839		
19J30-	29.0	3000	18.5	9.10	M_0						39.3	51.0	51.0	51.0
					M_N						29.0	29.0	29.0	29.0
					$M_{0,max}$						36.8	50.2	72.4	79.5
					M_{max}						55.2	73.8	104.7	127.6
					n_{eto}						3150	2850	2162	1817
19P14-	51.0	1350	14.3	7.20	M_0					47.5	64.0	64.0		
					M_N					46.4	51.0	51.0		
					$M_{0,max}$					69.5	79.6	106.7		
					M_{max}					69.5	116.7	155.5		
					n_{eto}					1400	1187	996		
19P30-	32.0	3000	19.0	10.00	M_0						43.1	58.7	64.0	64.0
					M_N						32.0	32.0	32.0	32.0
					$M_{0,max}$						39.6	53.9	79.6	87.6
					M_{max}						59.3	81.2	116.9	144.3
					n_{eto}						3000	2938	2638	2298

► I... [A], M... [Nm], n... [r/min], P... [kW]



Selection tables, Servo Inverter 9300

Forced ventilated IP54 motors

► The data applies to a mains connection voltage of 3 x 400 V and an inverter switching frequency of 8 kHz.

					EVS	9322-E□	9323-E□	9324-E□	9325-E□	9326-E□	9327-E□	9328-E□	9329-E□
					I_N	2.5	3.9	7.0	13.0	23.5	32.0	47.0	59.0
					$I_{0,max}$	3.8	5.9	10.5	19.5	23.5	32.0	47.0	52.0
MCS	M_N	n_N	I_N	P_N	I_{max}	3.8	5.9	10.5	19.5	35.3	48.0	70.5	88.5
12D17-	7.0	1650	3.0	1.20	M_0	5.9	7.5	7.5					
					M_N	5.3	7.0	7.0					
					$M_{0,max}$	7.6	11.6	17.7					
					M_{max}	7.6	11.6	17.7					
					n_{eto}	1790	1358	919					
12D35-	6.0	3525	5.6	2.20	M_0		4.6	7.5	7.5				
					M_N		3.7	6.0	6.0				
					$M_{0,max}$		5.9	10.1	17.3				
					M_{max}		5.9	10.1	17.3				
					n_{eto}		4344	3275	2116				
12H14-	12.0	1350	4.1	1.70	M_0		10.9	12.8	12.8				
					M_N		10.3	12.0	12.0				
					$M_{0,max}$		15.1	25.8	29.0				
					M_{max}		15.1	25.8	29.0				
					n_{eto}		1676	1013	918				
12H34-	10.5	3375	7.5	3.70	M_0			9.8	12.8				
					M_N			9.6	10.5				
					$M_{0,max}$			13.5	24.1				
					M_{max}			13.5	24.1				
					n_{eto}			3618	2447				
12L17-	17.0	1650	6.7	2.90	M_0			18.5	19.0				
					M_N			17.0	17.0				
					$M_{0,max}$			24.4	41.9				
					M_{max}			24.4	41.9				
					n_{eto}			1718	1158				
12L39-	14.0	3900	11.7	5.70	M_0				17.2	19.0	19.0		
					M_N				14.0	14.0	14.0		
					$M_{0,max}$				22.8	27.0	35.5		
					M_{max}				22.8	38.5	49.6		
					n_{eto}				4287	2799	2236		
14D14-	12.0	1350	5.4	1.70	M_0		8.5	12.5	12.5				
					M_N		8.0	12.0	12.0				
					$M_{0,max}$		12.1	20.2	29.0				
					M_{max}		12.1	20.2	29.0				
					n_{eto}		1437	928	676				
14D30-	10.5	3000	9.7	3.30	M_0			7.7	12.5	12.5			
					M_N			7.0	10.0	10.0			
					$M_{0,max}$			10.9	19.0	22.2			
					M_{max}			10.9	19.0	29.0			
					n_{eto}			3479	2159	1593			
14H12-	23.5	1200	8.3	3.00	M_0			17.3	25.5				
					M_N			17.2	23.5				
					$M_{0,max}$			25.4	43.9				
					M_{max}			25.4	43.9				
					n_{eto}			1247	800				

► I... [A], M... [Nm], n... [r/min], P... [kW]



Selection tables, Servo Inverter 9300

Forced ventilated IP54 motors

► The data applies to a mains connection voltage of 3 x 400 V and an inverter switching frequency of 8 kHz.

					EVS	9322-E□	9323-E□	9324-E□	9325-E□	9326-E□	9327-E□	9328-E□	9329-E□
					I_N	2.5	3.9	7.0	13.0	23.5	32.0	47.0	59.0
					$I_{0,max}$	3.8	5.9	10.5	19.5	23.5	32.0	47.0	52.0
MCS	M_N	n_N	I_N	P_N	I_{max}	3.8	5.9	10.5	19.5	35.3	48.0	70.5	88.5
14H28-	20.5	2775	15.0	6.00	M_0				16.2	25.5	25.5		
					M_N				16.1	20.5	20.5		
					$M_{0,max}$				23.8	28.2	37.1		
					M_{max}				23.8	40.2	51.9		
					n_{eto}				2875	1817	1471		
14L14-	30.5	1350	11.8	4.30	M_0				33.4	34.5			
					M_N				30.5	30.5			
					$M_{0,max}$				45.0	52.9			
					M_{max}				45.0	73.8			
					n_{eto}				1126	788			
14L30-	25.5	3000	20.8	8.00	M_0					27.4	34.5	34.5	
					M_N					25.5	25.5	25.5	
					$M_{0,max}$					28.3	37.6	52.9	
					M_{max}					41.0	53.9	73.9	
					n_{eto}					2608	2096	1672	
14P11-	42.0	1050	13.4	4.60	M_0				40.1	43.5	43.5		
					M_N				40.0	42.0	42.0		
					$M_{0,max}$				52.5	61.8	80.0		
					M_{max}				52.5	86.3	105.1		
					n_{eto}				998	668	573		
14P26-	33.0	2625	21.9	9.10	M_0					35.8	43.5	43.5	
					M_N					33.0	33.0	33.0	
					$M_{0,max}$					33.0	43.9	61.8	
					M_{max}					47.9	63.0	86.4	
					n_{eto}					2299	1829	1404	
19F12-	38.0	1200	11.3	4.80	M_0			22.6	41.5	41.5			
					M_N			22.0	38.0	38.0			
					$M_{0,max}$			33.0	58.2	68.3			
					M_{max}			33.0	58.2	86.0			
					n_{eto}			1459	1056	746			
19F29-	32.5	2850	20.1	9.70	M_0					39.9	41.5		
					M_N					32.5	32.5		
					$M_{0,max}$					35.2	47.2		
					M_{max}					51.5	68.3		
					n_{eto}					2573	2033		
19J12-	62.5	1200	18.3	7.90	M_0				43.6	70.5	70.5		
					M_N				43.4	62.5	62.5		
					$M_{0,max}$				60.8	72.4	96.0		
					M_{max}				60.8	104.5	129.0		
					n_{eto}				1376	996	839		
19J29-	50.5	2850	31.0	15.10	M_0						55.5	70.5	70.5
					M_N						50.5	50.5	50.5
					$M_{0,max}$						50.2	72.4	79.5
					M_{max}						73.8	104.7	127.6
					n_{eto}						2850	2162	1817

► I... [A], M... [Nm], n... [r/min], P... [kW]



Selection tables, Servo Inverter 9300

Forced ventilated IP54 motors

► The data applies to a mains connection voltage of 3 x 400 V and an inverter switching frequency of 8 kHz.

					EVS	9322-E□	9323-E□	9324-E□	9325-E□	9326-E□	9327-E□	9328-E□	9329-E□
					I_N	2.5	3.9	7.0	13.0	23.5	32.0	47.0	59.0
					$I_{0,max}$	3.8	5.9	10.5	19.5	23.5	32.0	47.0	52.0
MCS	**M_N**	**n_N**	**I_N**	**P_N**	I_{max}	3.8	5.9	10.5	19.5	35.3	48.0	70.5	88.5
19P12-	72.0	1200	21.3	9.00	M_0				47.5	86.0	86.0		
					M_N				46.4	72.0	72.0		
					$M_{0,max}$				69.5	79.6	106.7		
					M_{max}				69.5	116.7	155.5		
					n_{eto}				1400	1187	996		
19P29-	53.0	2850	29.5	15.80	M_0						58.7	86.0	86.0
					M_N						53.0	53.0	53.0
					$M_{0,max}$						53.9	79.6	87.6
					M_{max}						81.2	116.9	144.3
					n_{eto}						2938	2638	2298

► I... [A], M... [Nm], n... [r/min], P... [kW]



Torque characteristics

- The data applies to a mains connection voltage of 3 x 400 V.
- You can find further torque characteristics at **www.lenze.de/dsc**.

MCS06C41- (non-ventilated)

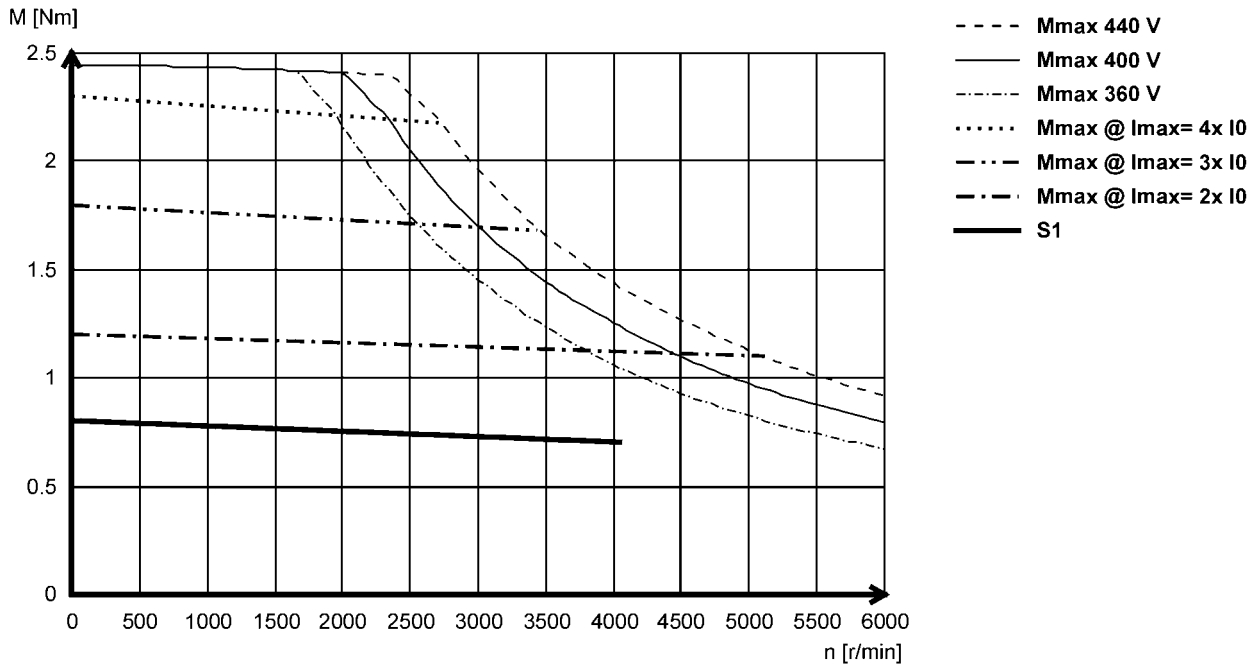

MCS06C60- (non-ventilated)

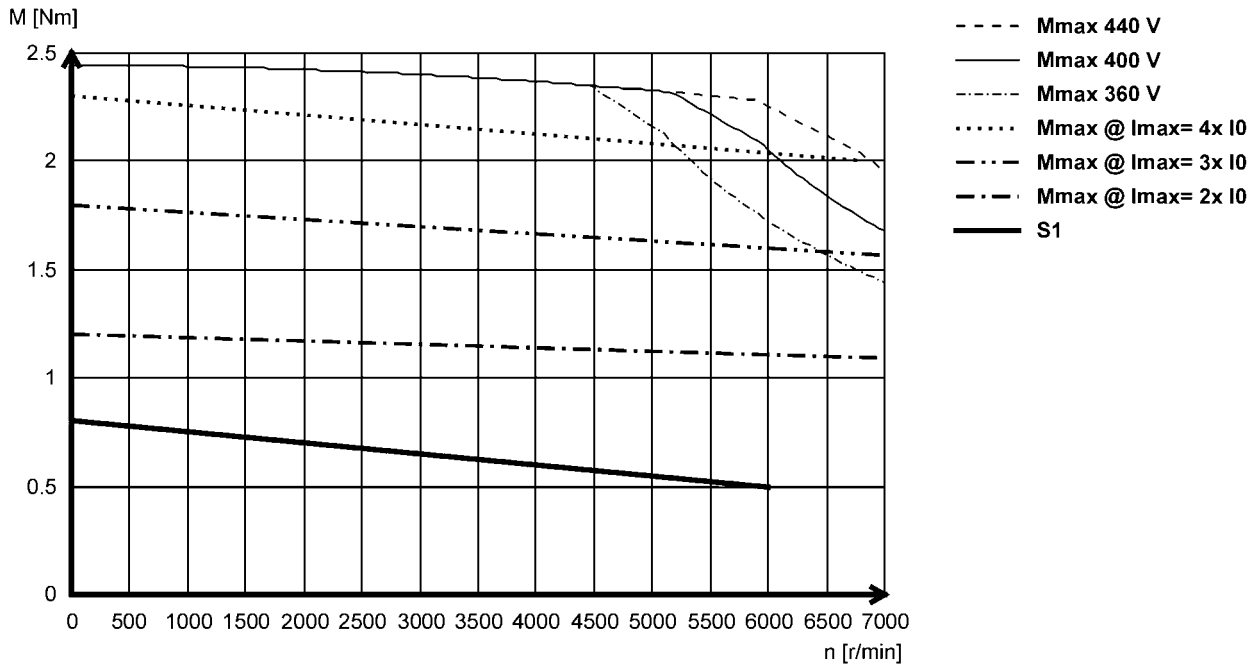



Torque characteristics

- The data applies to a mains connection voltage of 3 x 400 V.
- You can find further torque characteristics at **www.lenze.de/dsc**.

MCS06F41- (non-ventilated)

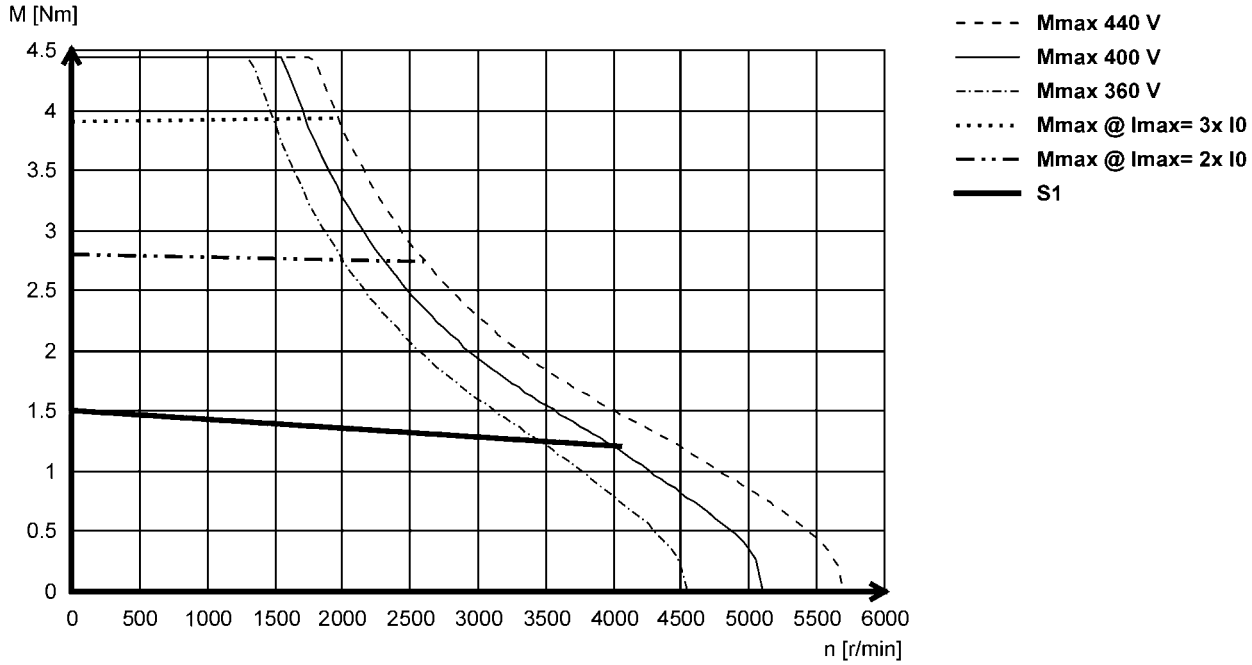

MCS06F60- (non-ventilated)

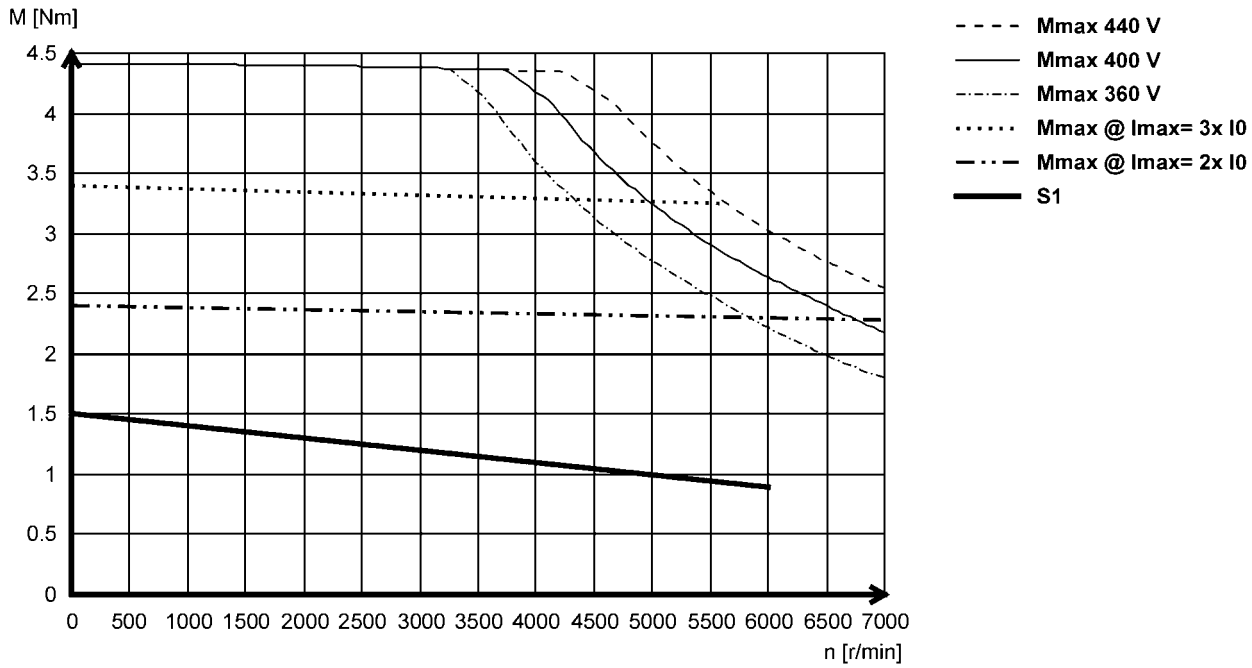



Torque characteristics

- The data applies to a mains connection voltage of 3 x 400 V.
- You can find further torque characteristics at **www.lenze.de/dsc**.

MCS06I41- (non-ventilated)

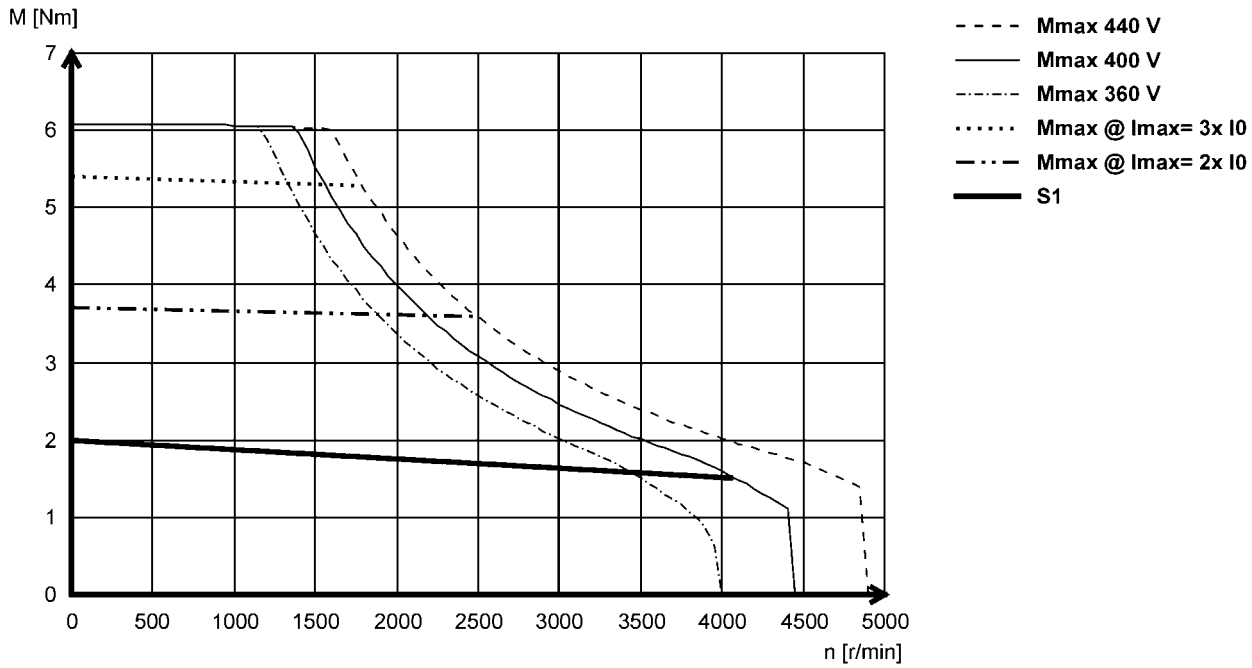

MCS06I60- (non-ventilated)

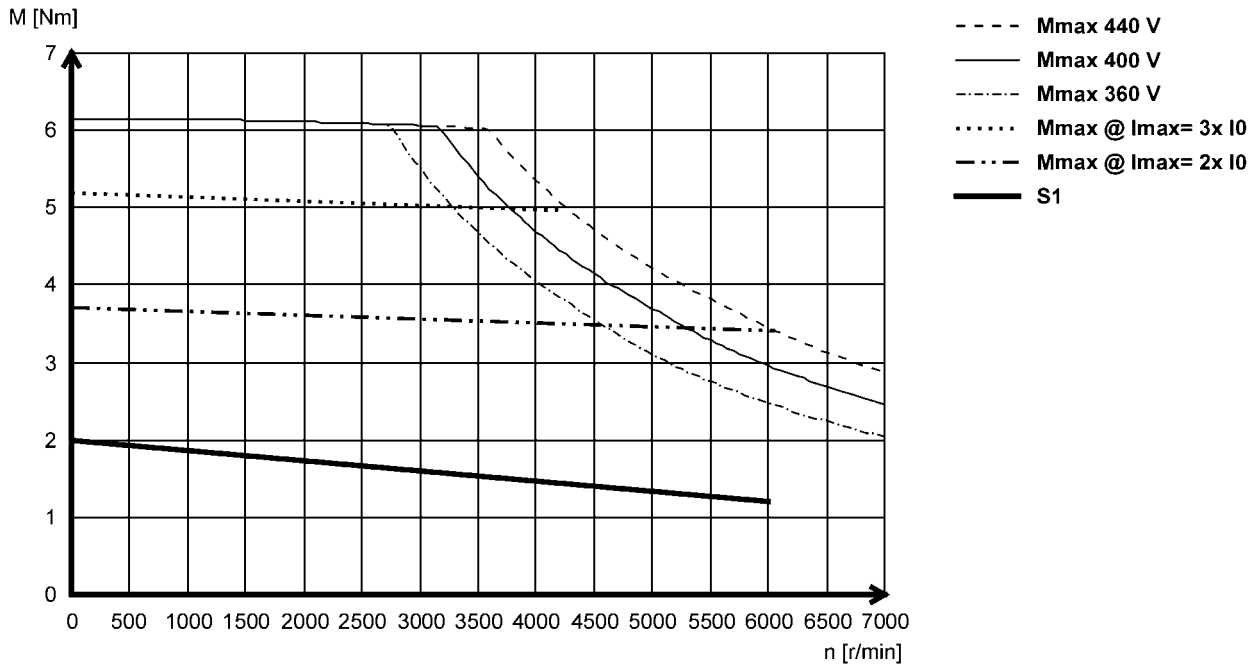



Torque characteristics

- The data applies to a mains connection voltage of 3 x 400 V.
- You can find further torque characteristics at **www.lenze.de/dsc**.

MCS09D41- (non-ventilated)

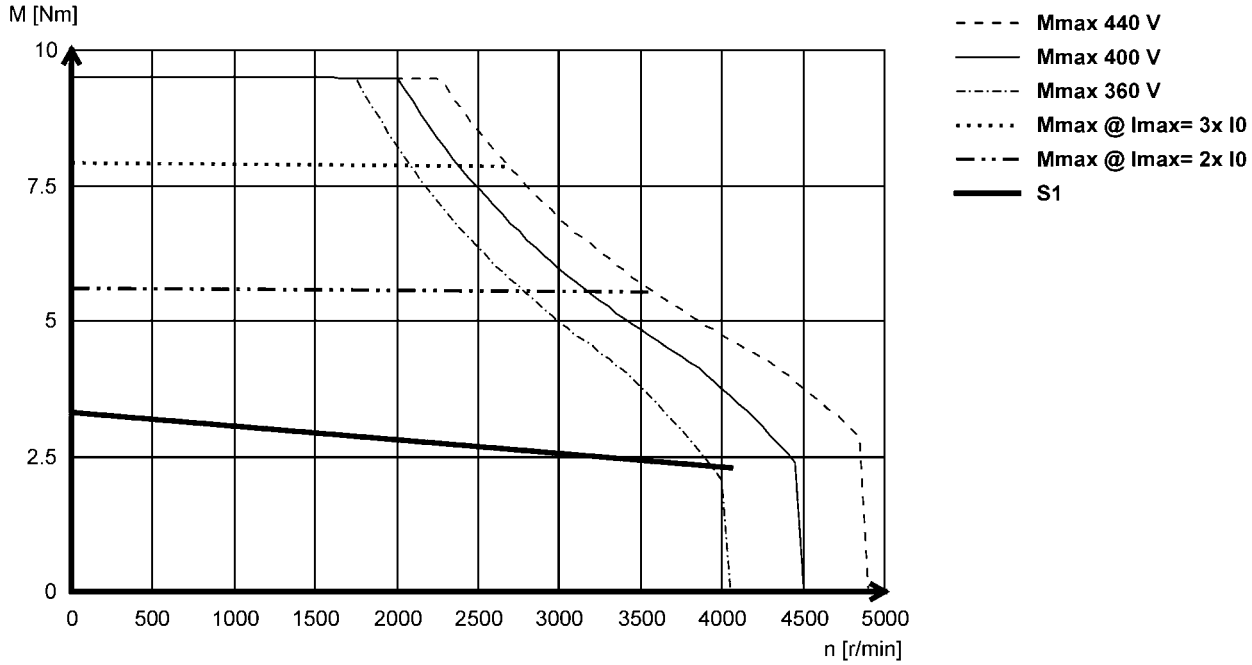

MCS09D60- (non-ventilated)

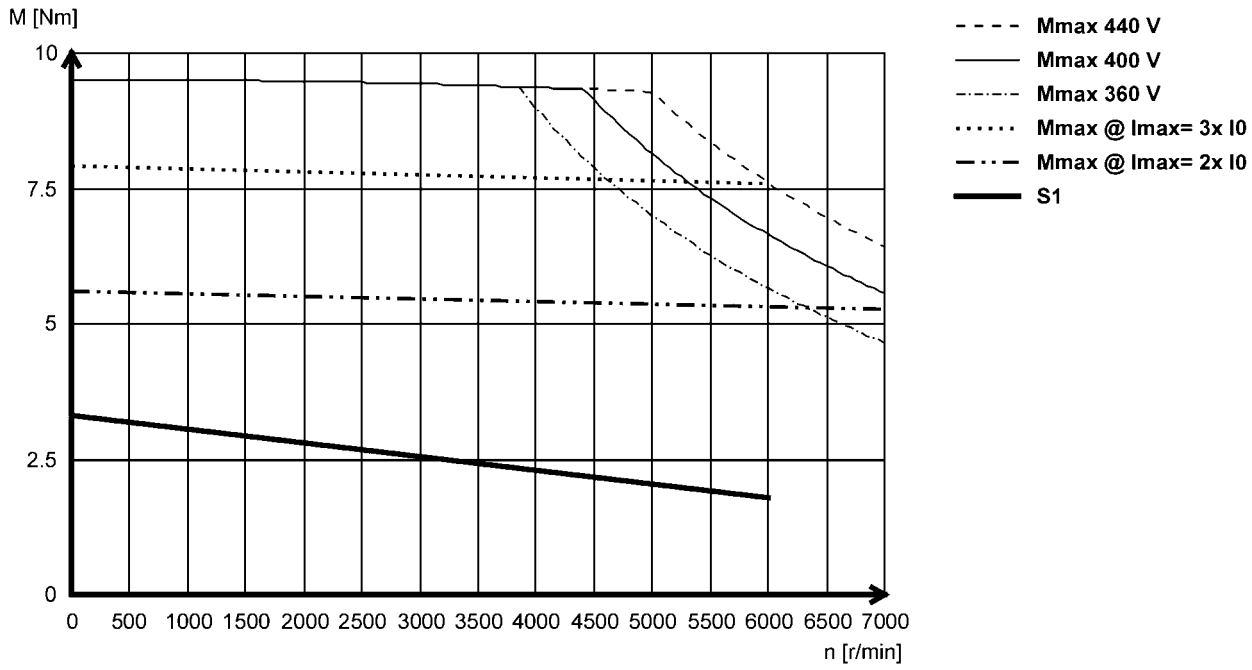



Torque characteristics

- The data applies to a mains connection voltage of 3 x 400 V.
- You can find further torque characteristics at **www.lenze.de/dsc**.

MCS09F38- (non-ventilated)

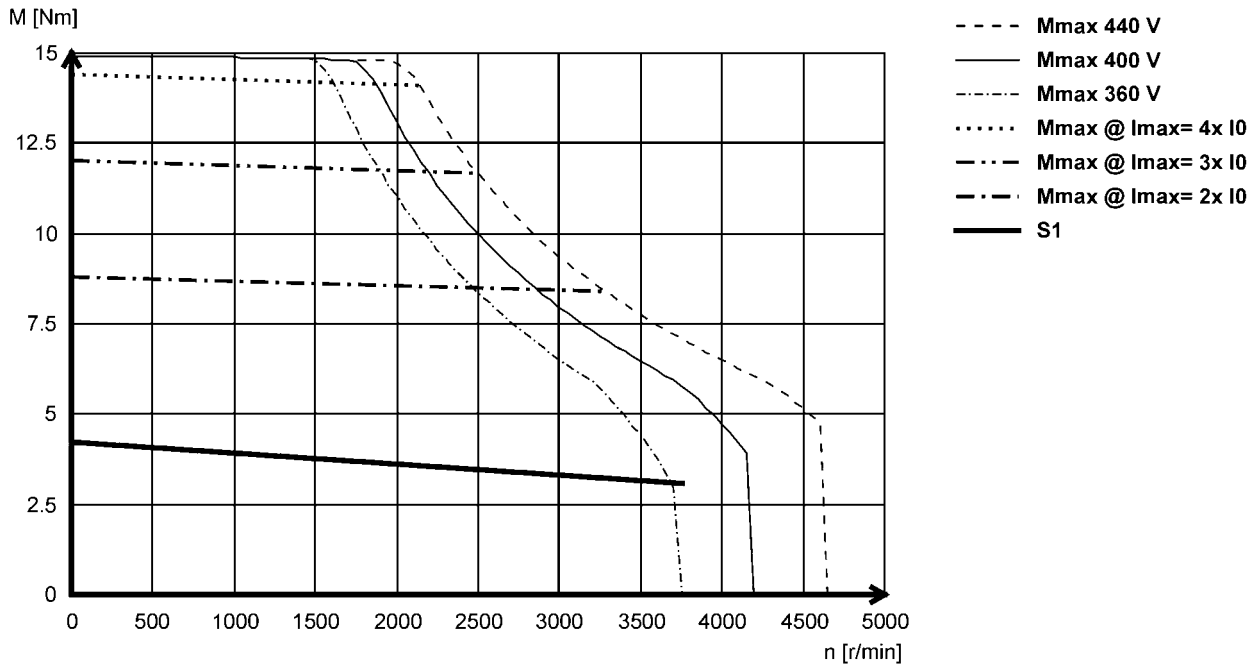

MCS09F60- (non-ventilated)

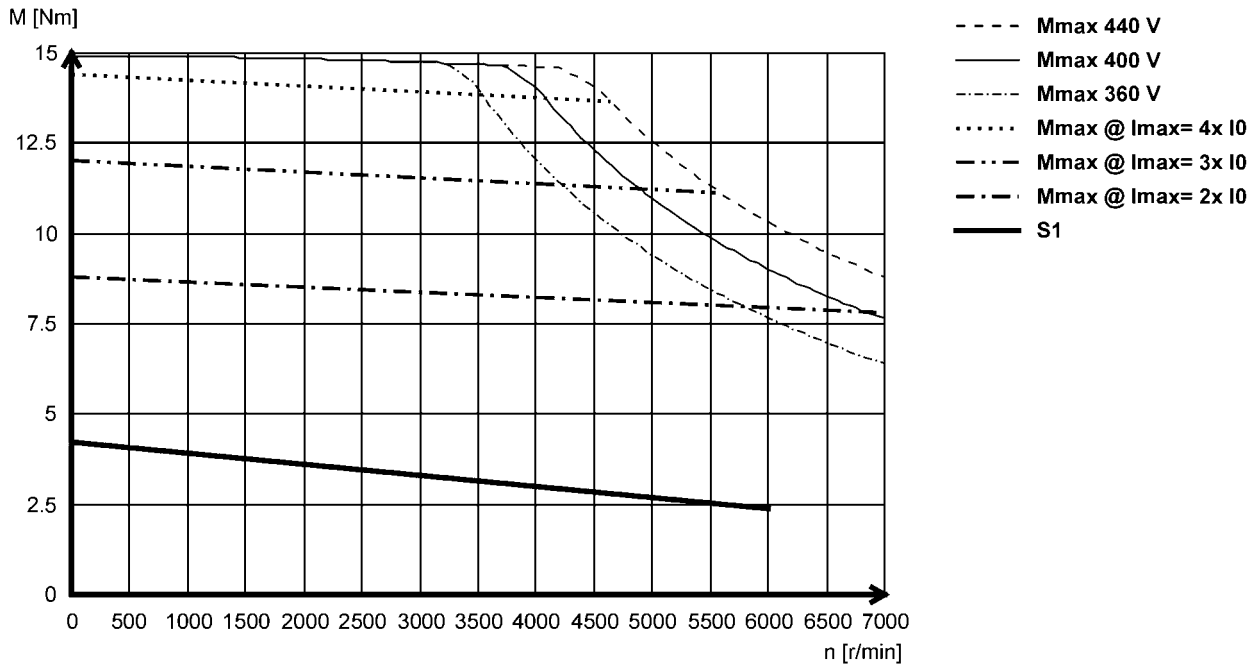



Torque characteristics

- The data applies to a mains connection voltage of 3 x 400 V.
- You can find further torque characteristics at **www.lenze.de/dsc**.

MCS09H41- (non-ventilated)

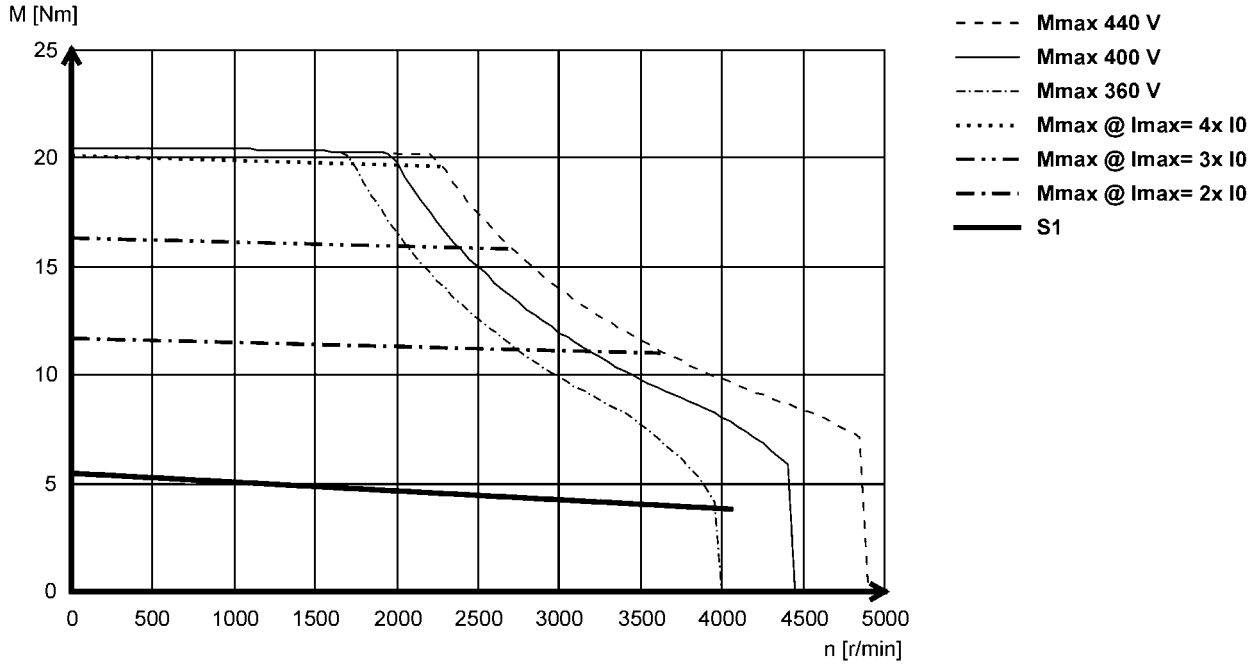

MCS09H60- (non-ventilated)

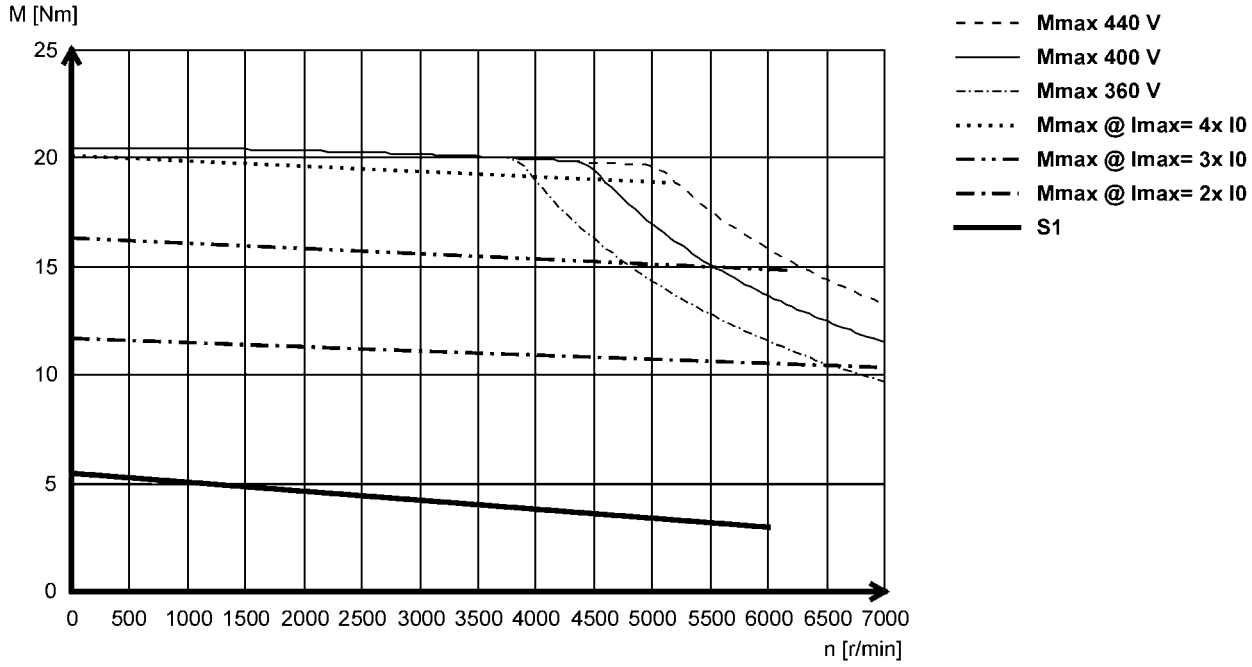



Torque characteristics

- The data applies to a mains connection voltage of 3 x 400 V.
- You can find further torque characteristics at **www.lenze.de/dsc**.

MCS09L41- (non-ventilated)

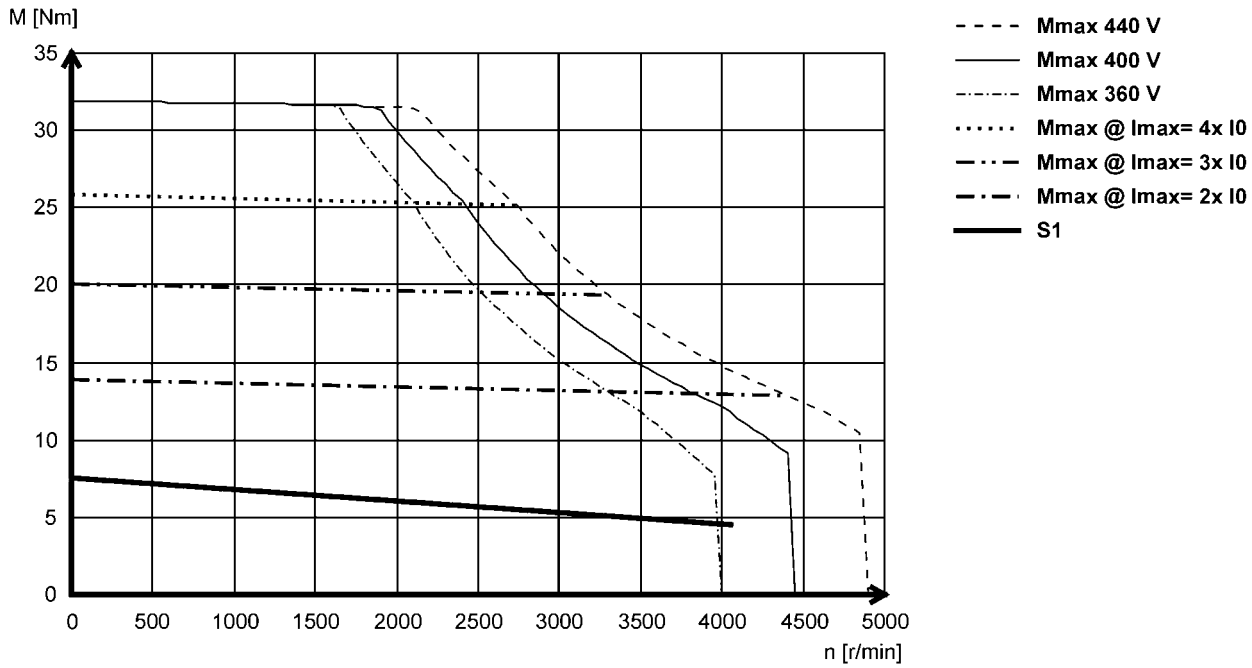

MCS09L51- (non-ventilated)

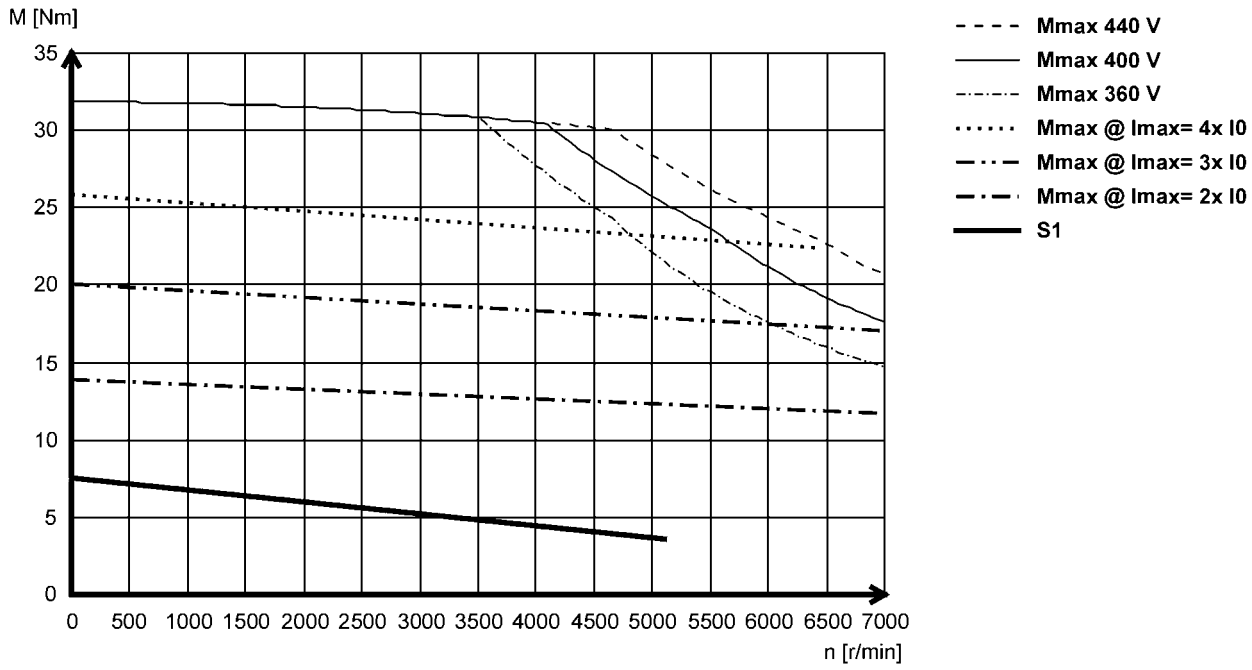



Torque characteristics

- The data applies to a mains connection voltage of 3 x 400 V.
- You can find further torque characteristics at **www.lenze.de/dsc**.

MCS12D17 (forced ventilated)

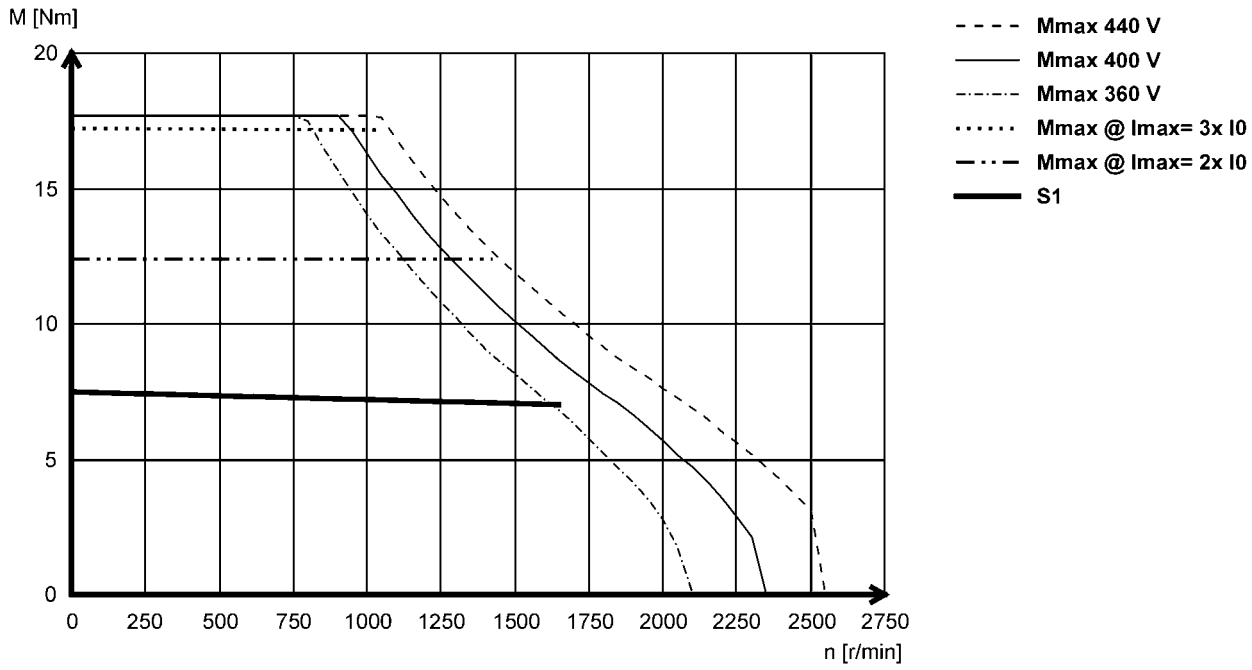

MCS12D20- (non-ventilated)

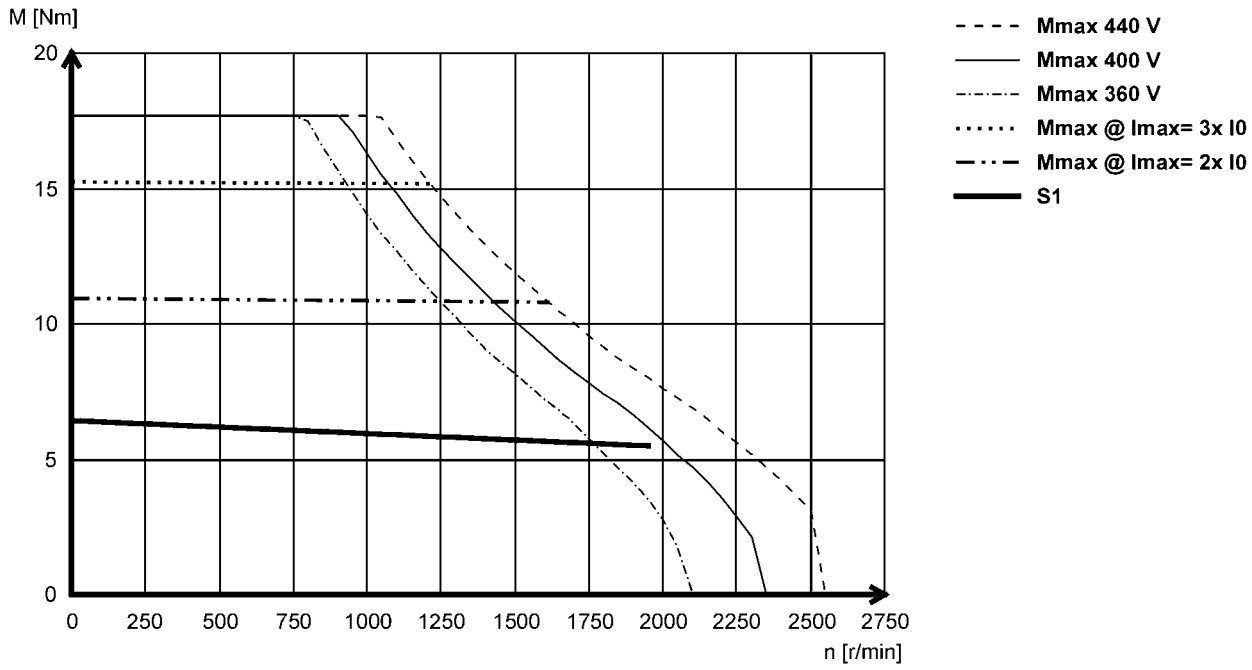



Torque characteristics

- The data applies to a mains connection voltage of 3 x 400 V.
- You can find further torque characteristics at **www.lenze.de/dsc**.

MCS12D35- (forced ventilated)

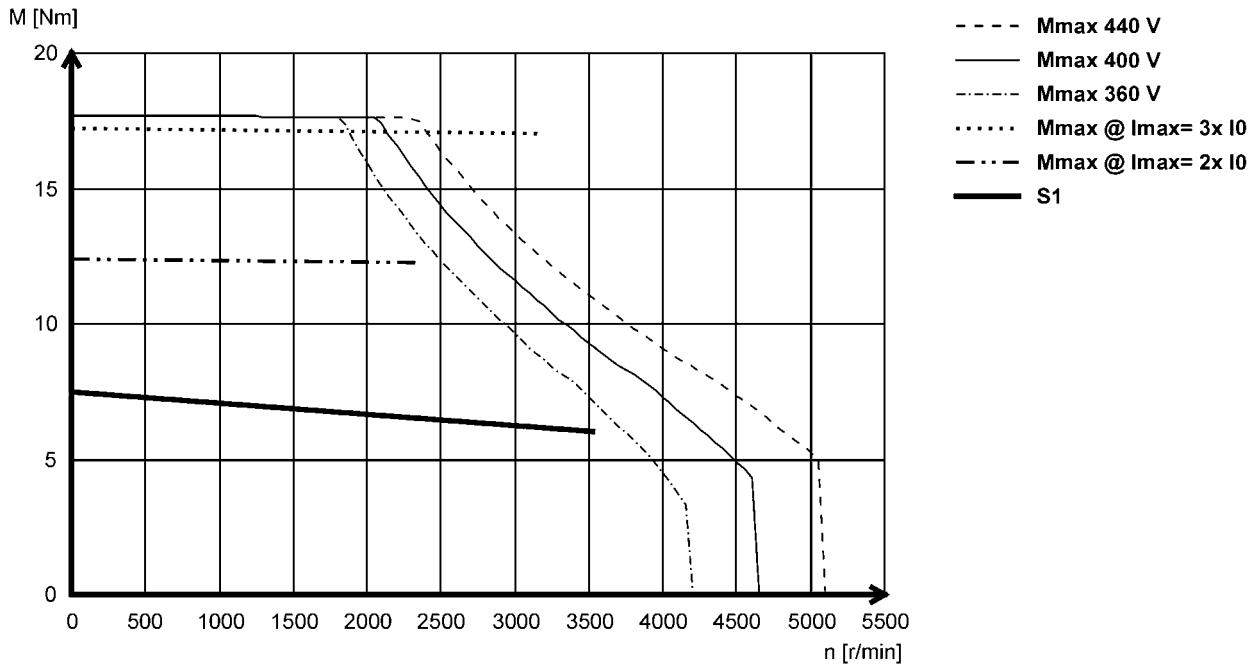

MCS12D41- (non-ventilated)

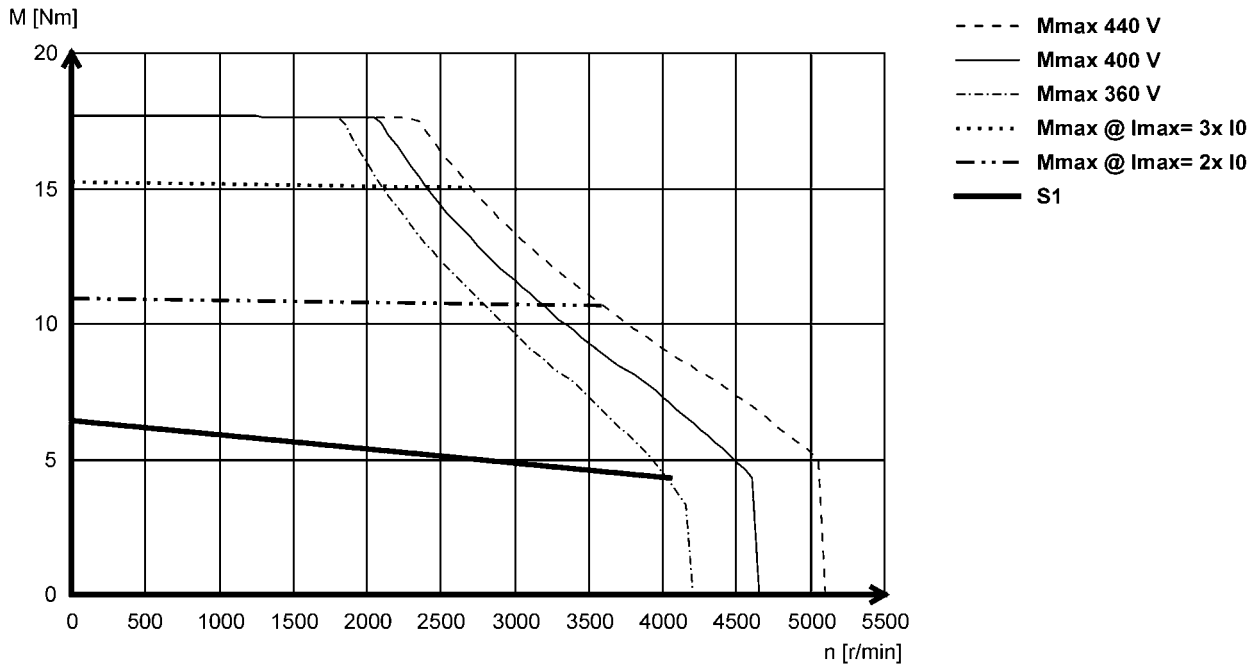



Torque characteristics

- The data applies to a mains connection voltage of 3 x 400 V.
- You can find further torque characteristics at **www.lenze.de/dsc**.

MCS12H14- (forced ventilated)

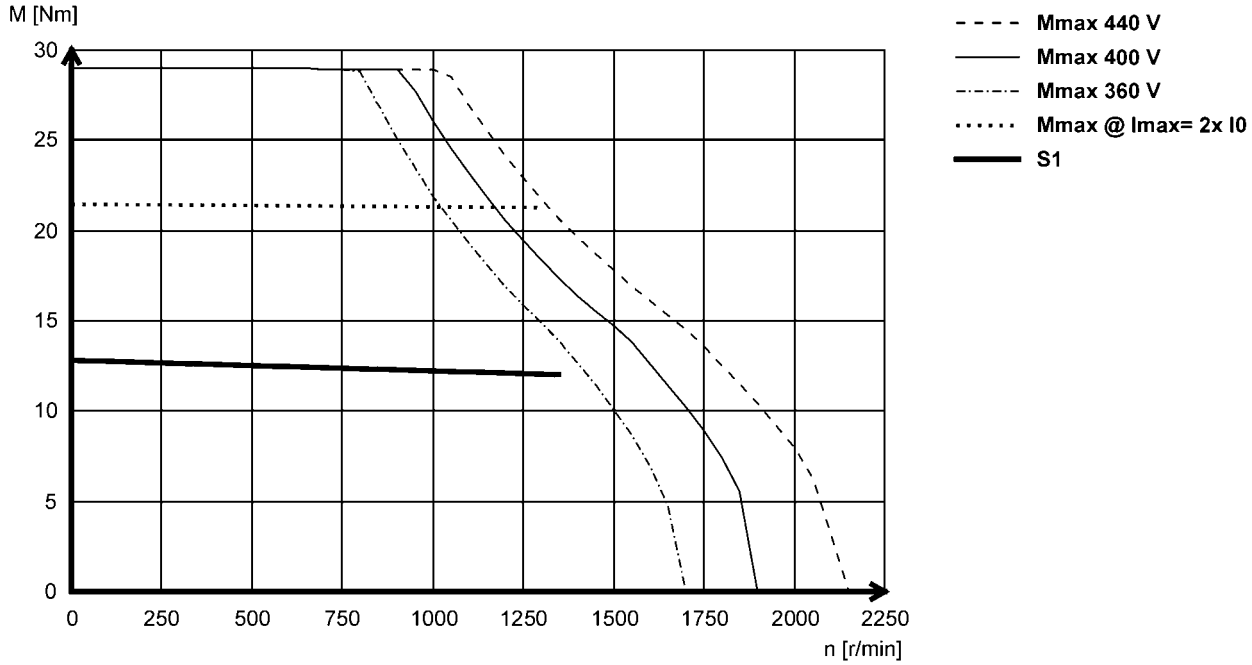

MCS12H15- (non-ventilated)

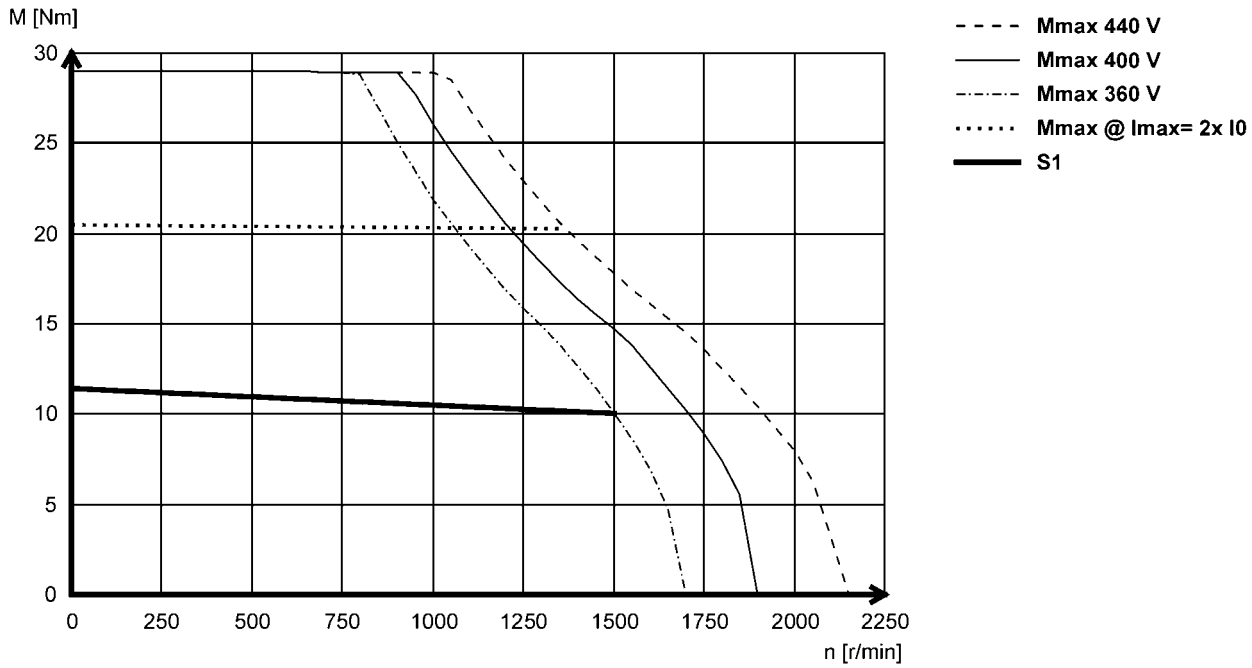



Torque characteristics

- The data applies to a mains connection voltage of 3 x 400 V.
- You can find further torque characteristics at **www.lenze.de/dsc**.

MCS12H34- (forced ventilated)

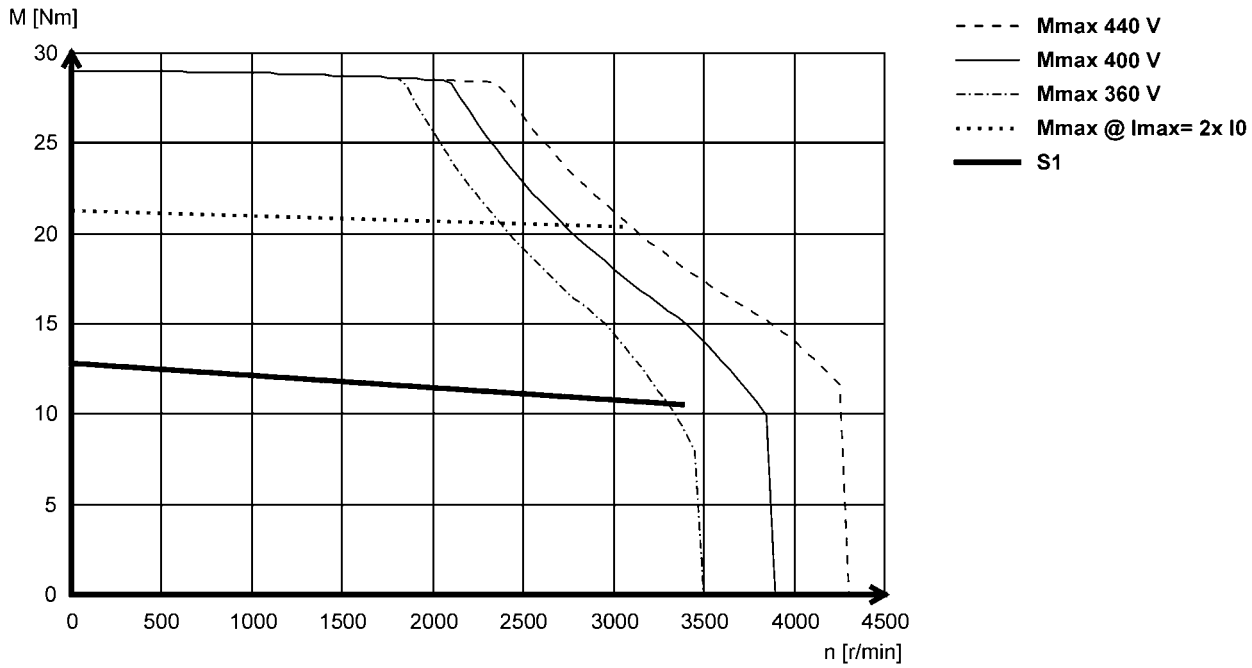

MCS12H35- (non-ventilated)

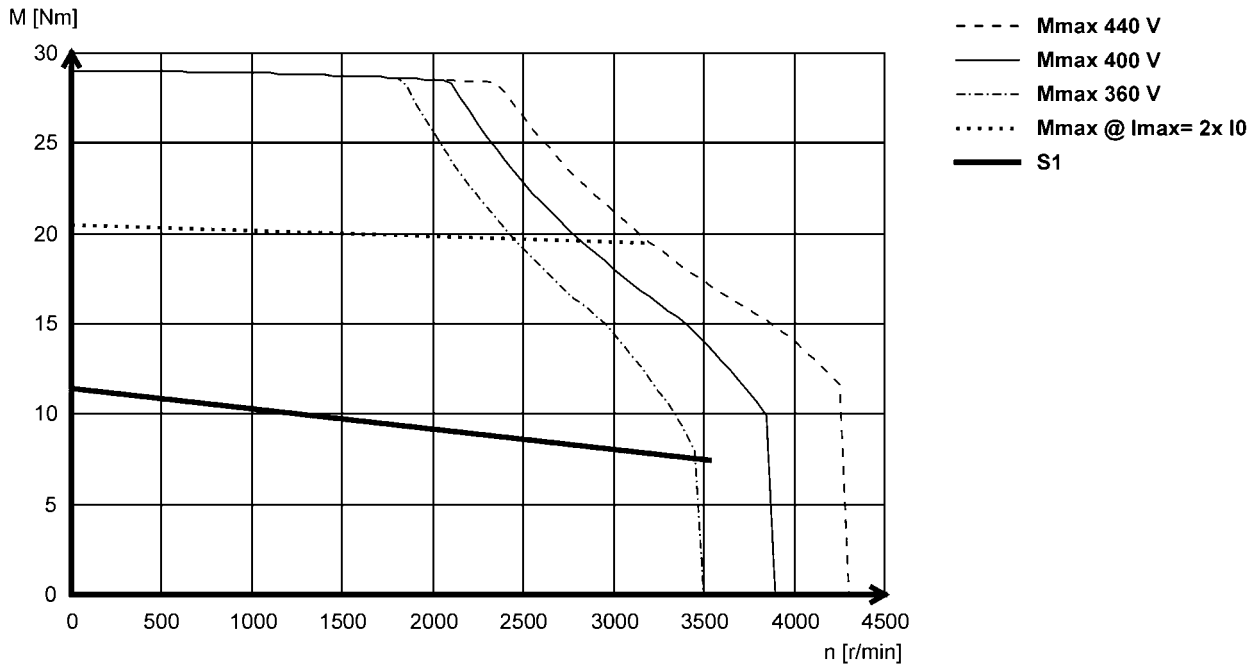



Torque characteristics

- The data applies to a mains connection voltage of 3 x 400 V.
- You can find further torque characteristics at **www.lenze.de/dsc**.

MCS12L17- (forced ventilated)

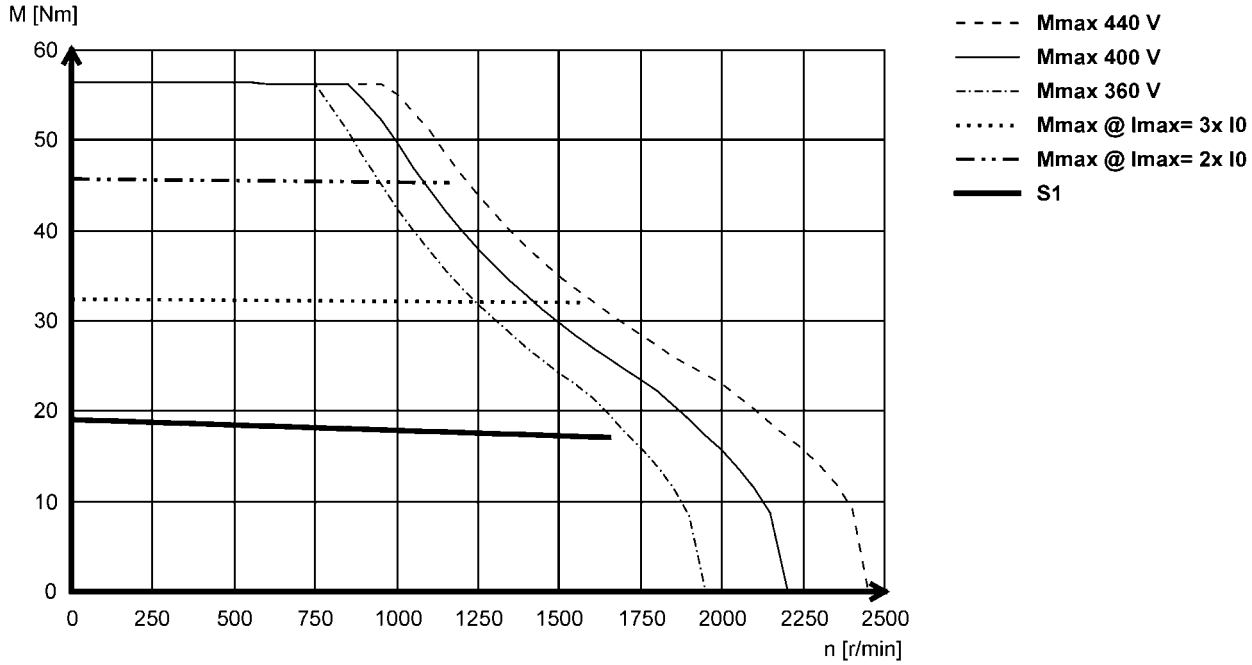

MCS12L20- (non-ventilated)

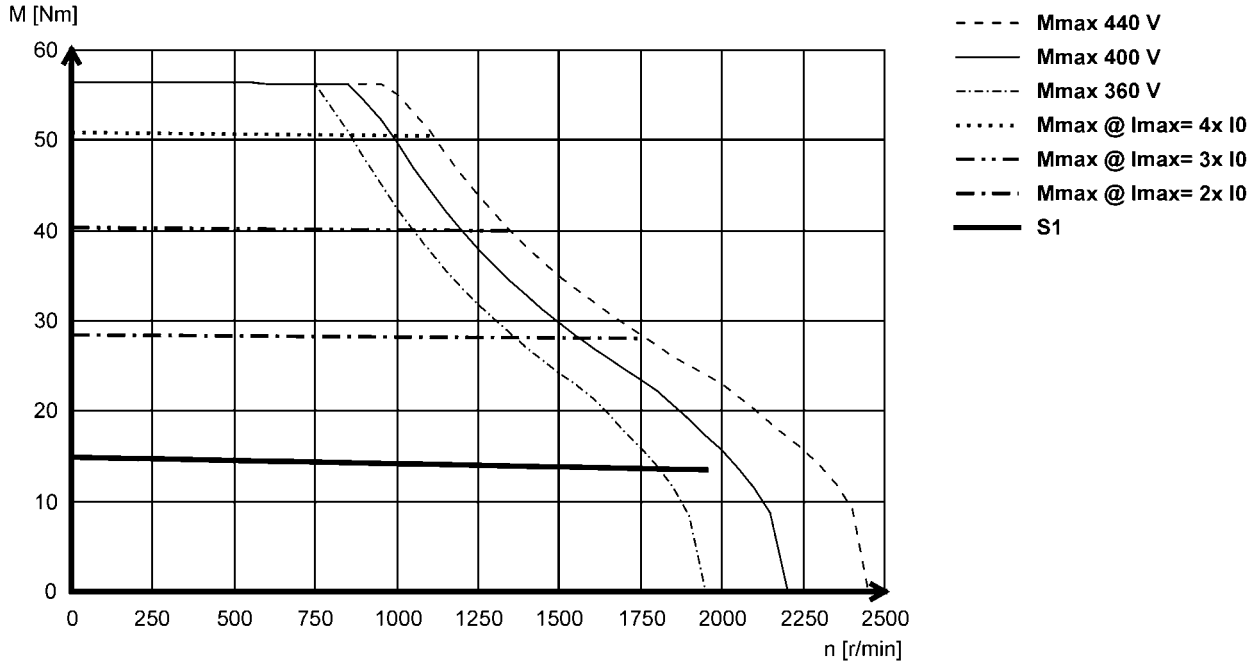



Torque characteristics

- The data applies to a mains connection voltage of 3 x 400 V.
- You can find further torque characteristics at **www.lenze.de/dsc**.

MCS12L39- (forced ventilated)

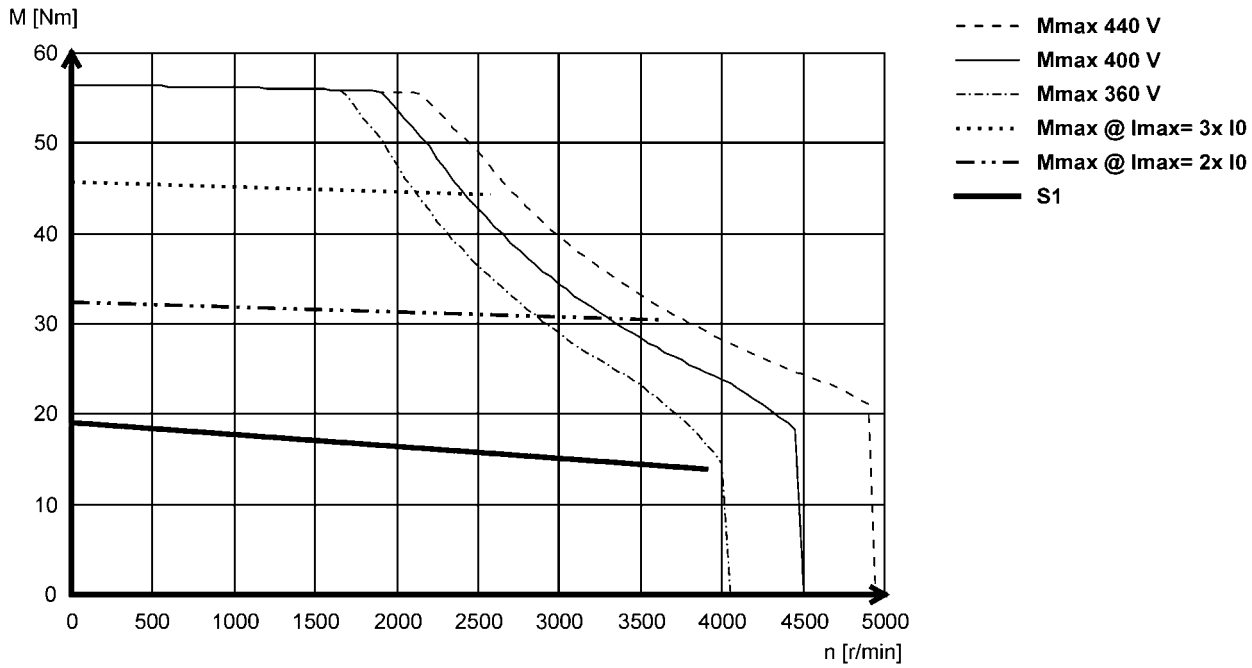

MCS12L41- (non-ventilated)

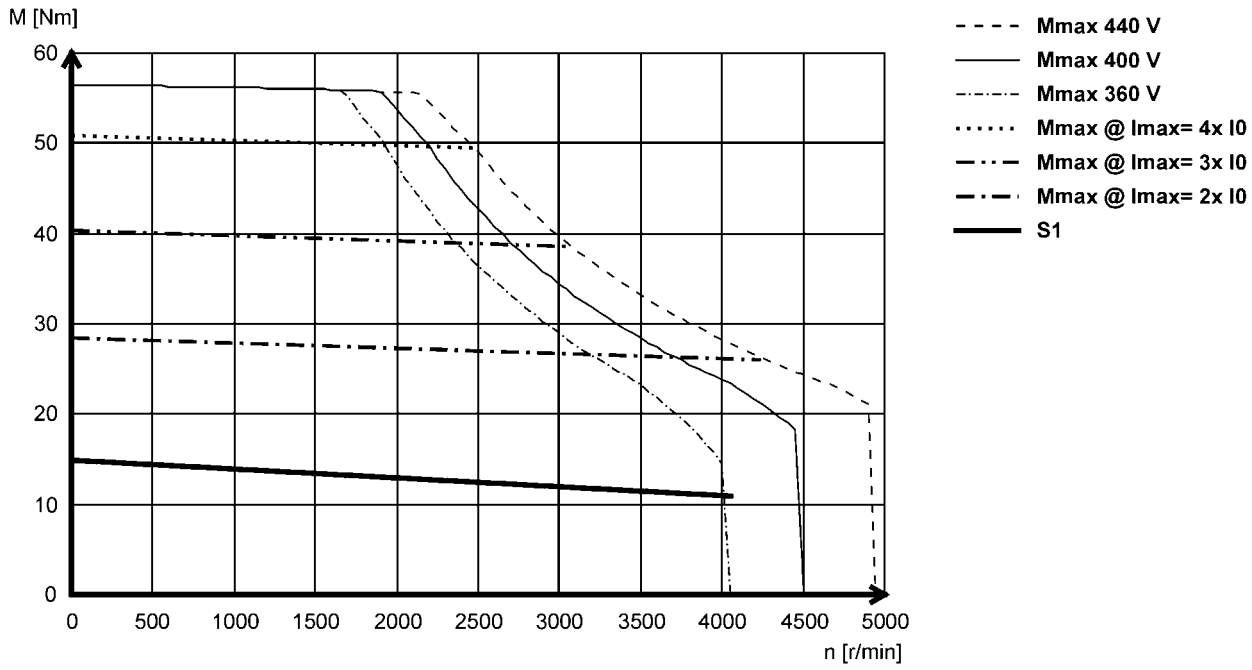



Torque characteristics

- The data applies to a mains connection voltage of 3 x 400 V.
- You can find further torque characteristics at **www.lenze.de/dsc**.

MCS14D14- (forced ventilated)

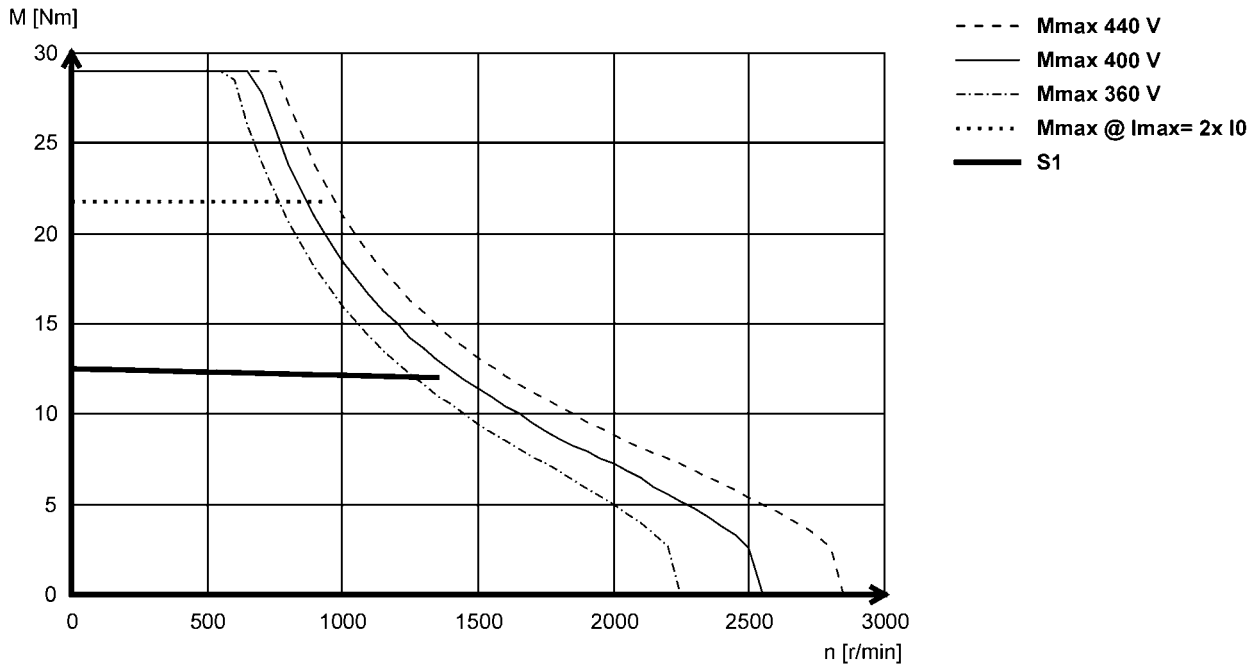

MCS14D15- (non-ventilated)

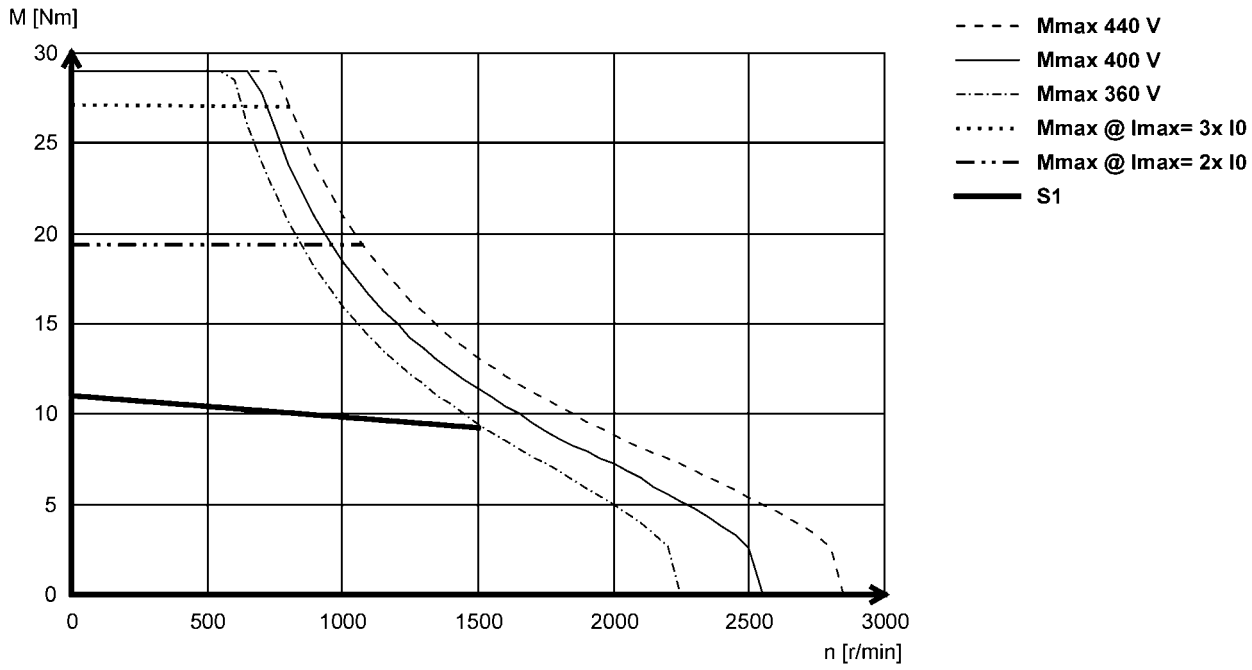



Torque characteristics

- The data applies to a mains connection voltage of 3 x 400 V.
- You can find further torque characteristics at **www.lenze.de/dsc**.

MCS14D30 (forced ventilated)

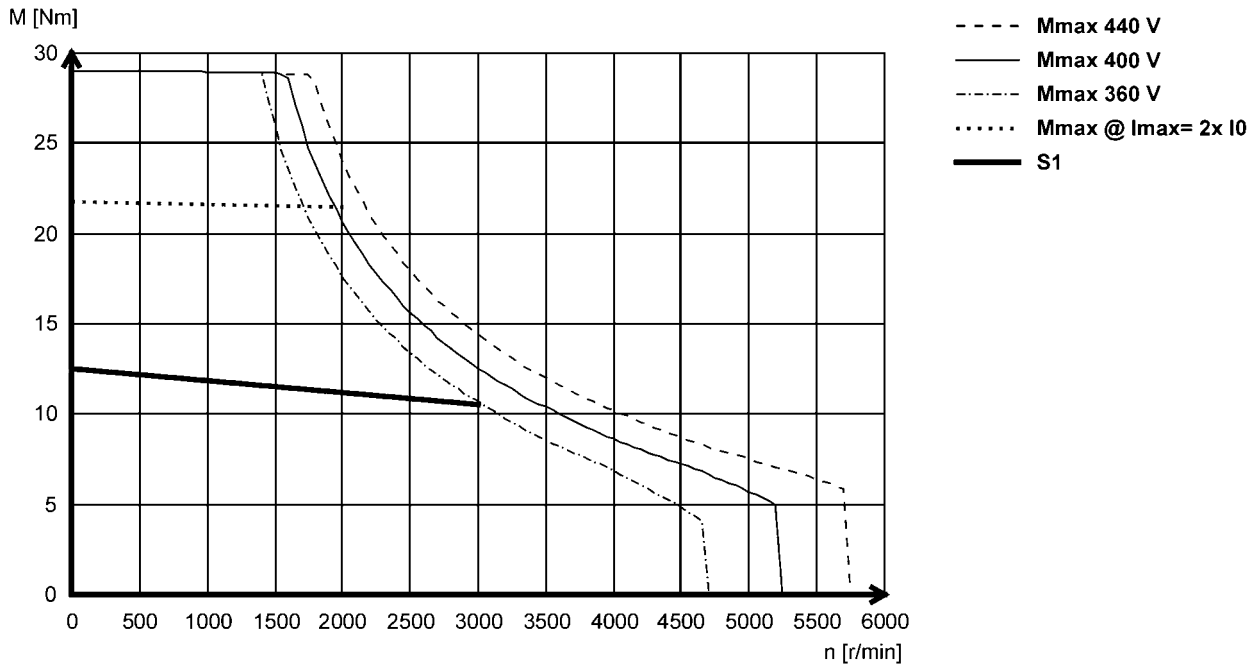

MCS14D36- (non-ventilated)

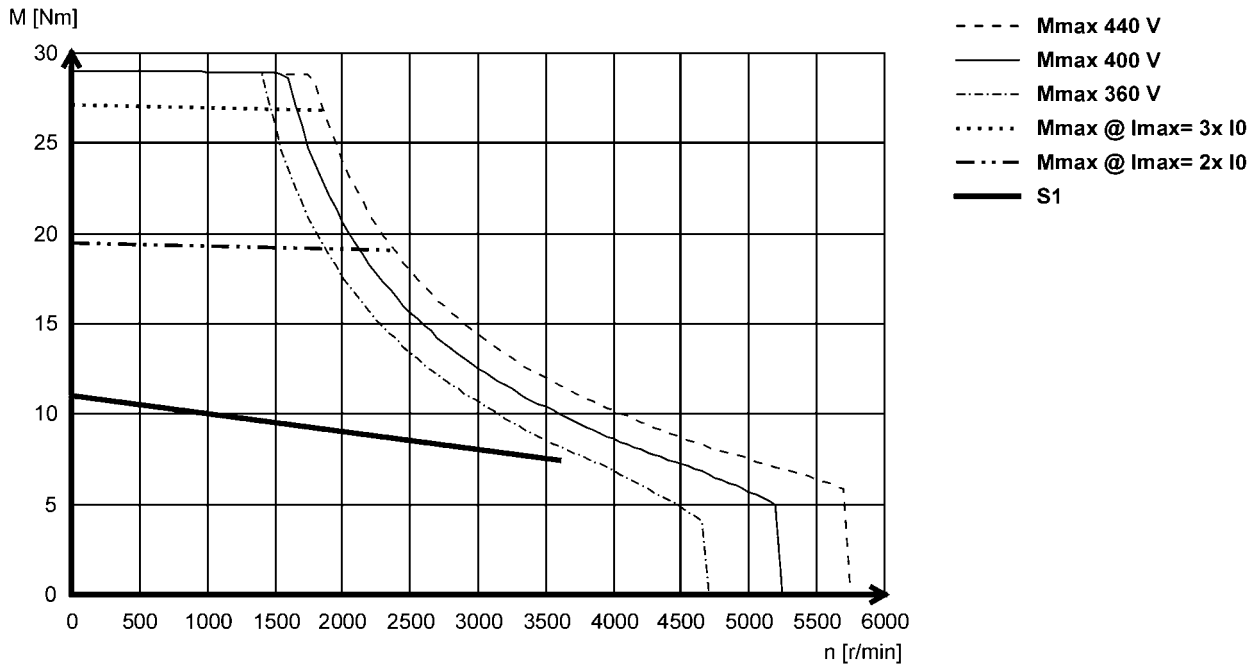



Torque characteristics

- The data applies to a mains connection voltage of 3 x 400 V.
- You can find further torque characteristics at **www.lenze.de/dsc**.

MCS14H12- (forced ventilated)

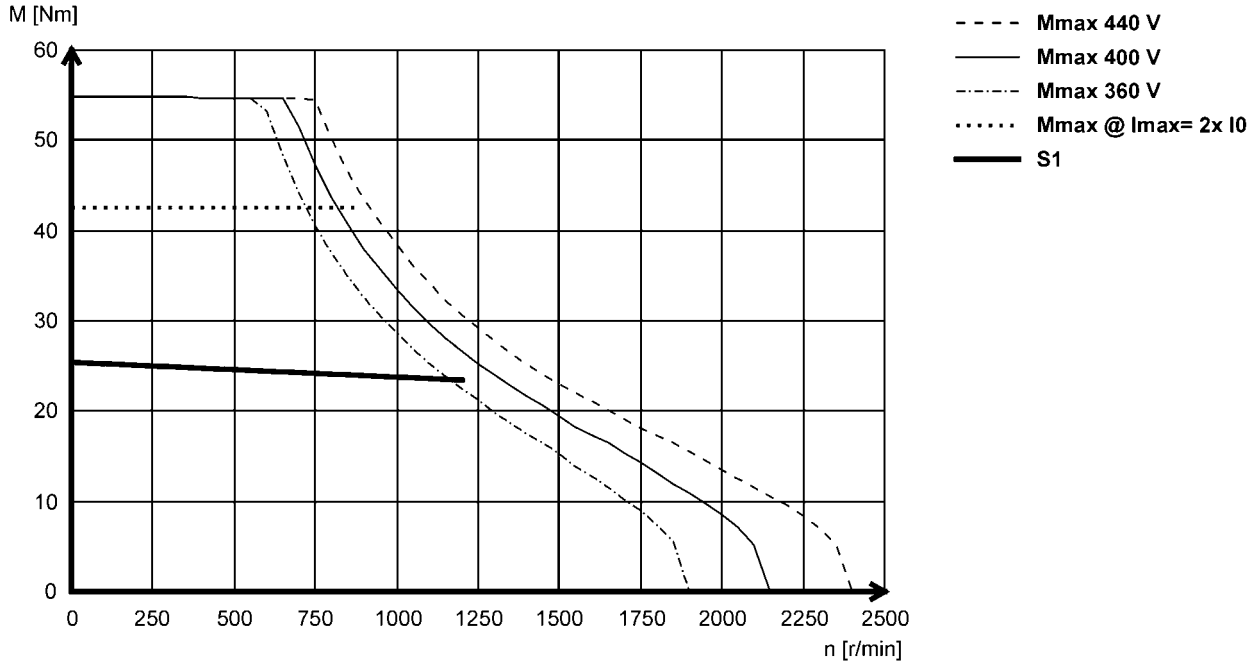

MCS14H15- (non-ventilated)

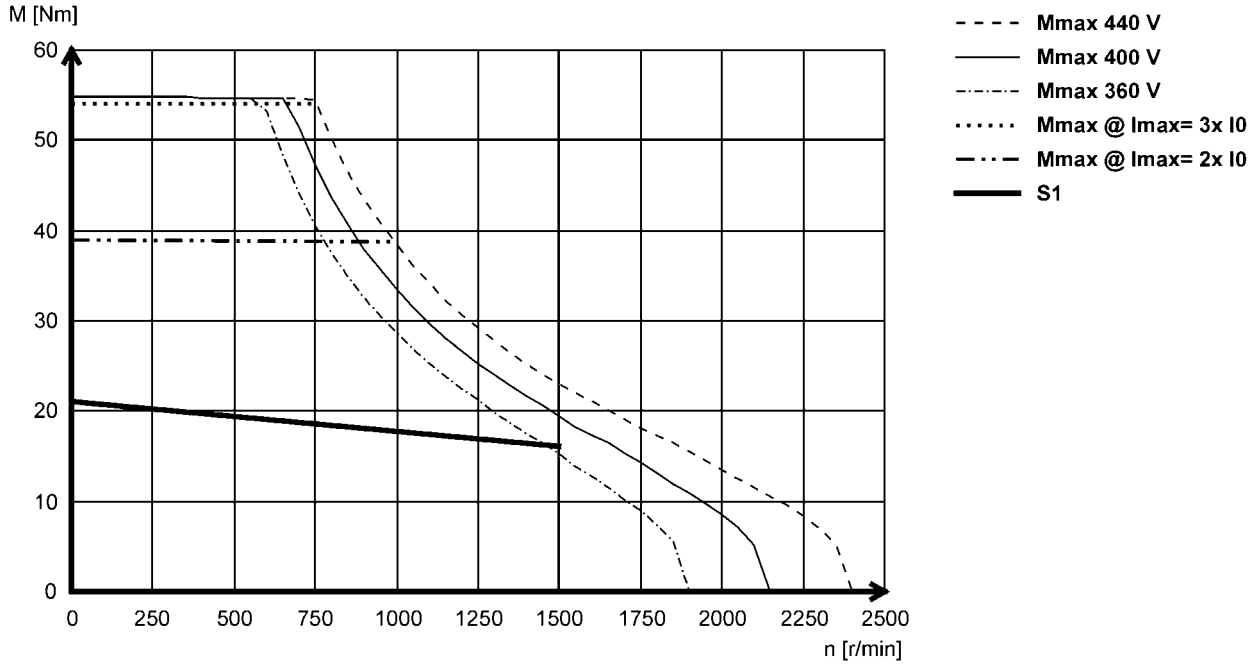



Torque characteristics

- The data applies to a mains connection voltage of 3 x 400 V.
- You can find further torque characteristics at **www.lenze.de/dsc**.

MCS14H28- (forced ventilated)

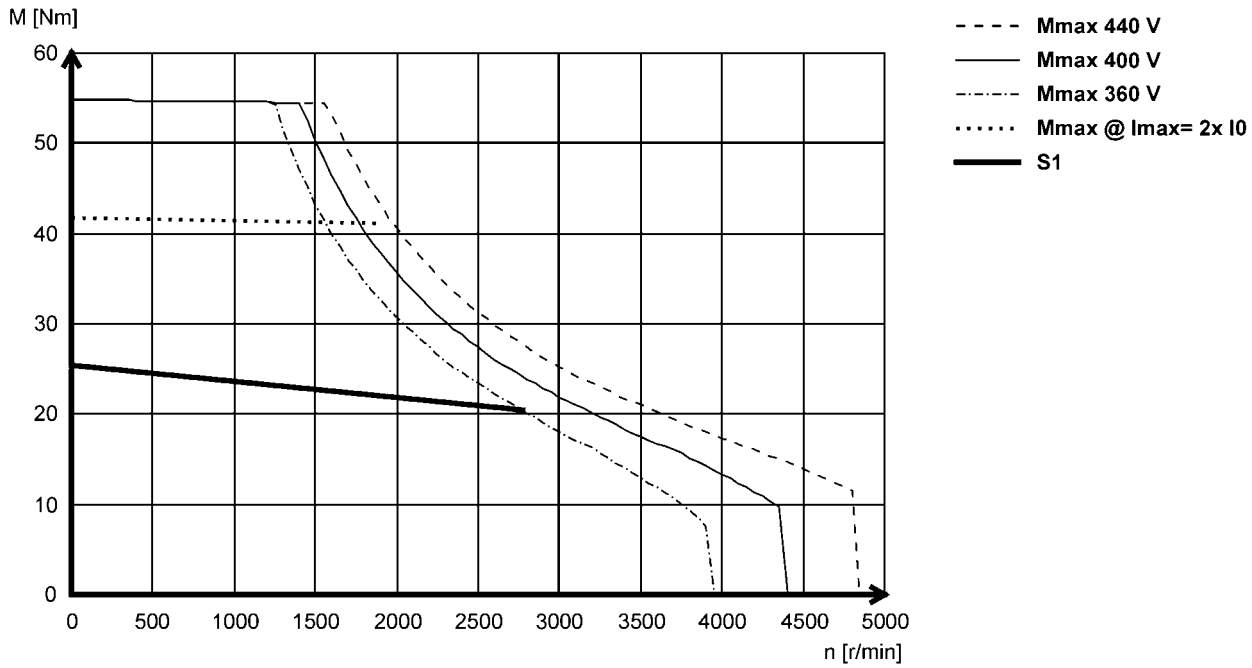

MCS14H32- (non-ventilated)

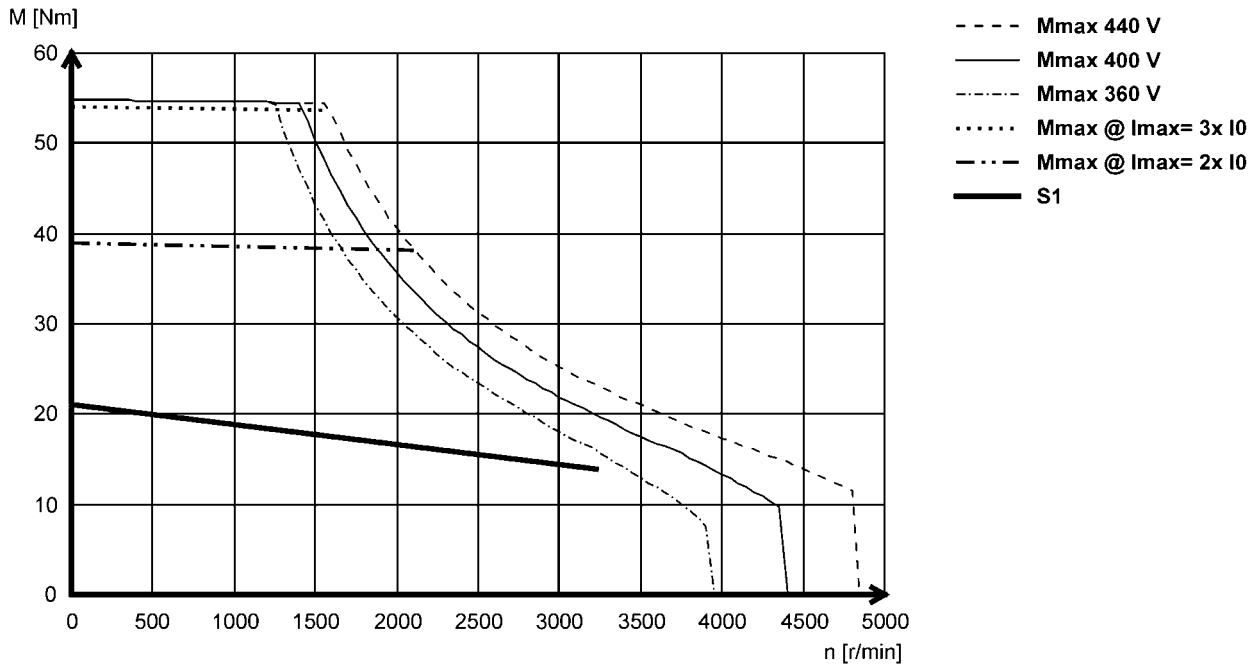



Torque characteristics

- The data applies to a mains connection voltage of 3 x 400 V.
- You can find further torque characteristics at **www.lenze.de/dsc**.

MCS14L14- (forced ventilated)

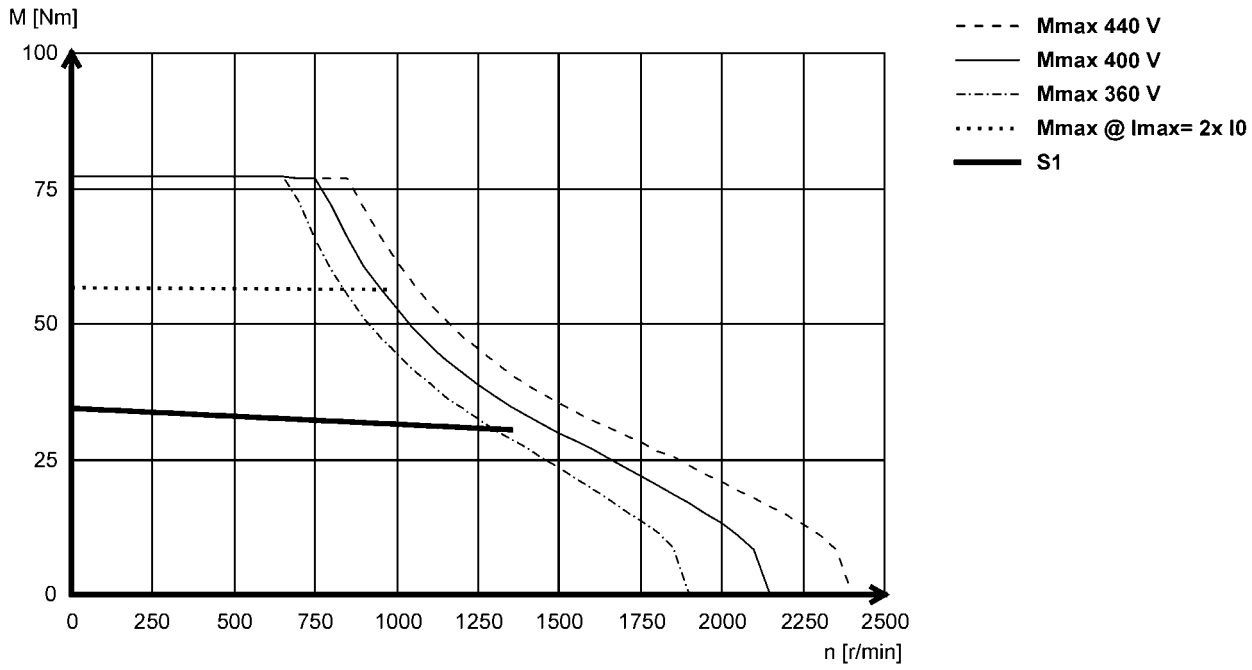

MCS14L15- (non-ventilated)

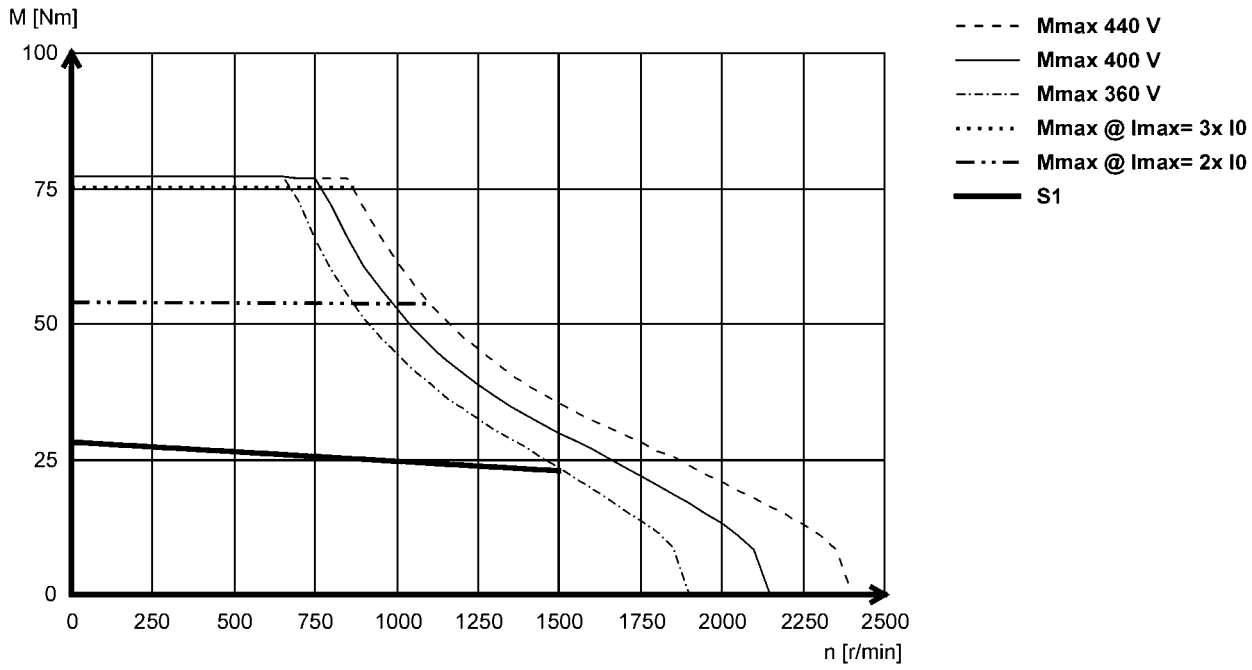



Torque characteristics

- The data applies to a mains connection voltage of 3 x 400 V.
- You can find further torque characteristics at **www.lenze.de/dsc**.

MCS14L30- (forced ventilated)

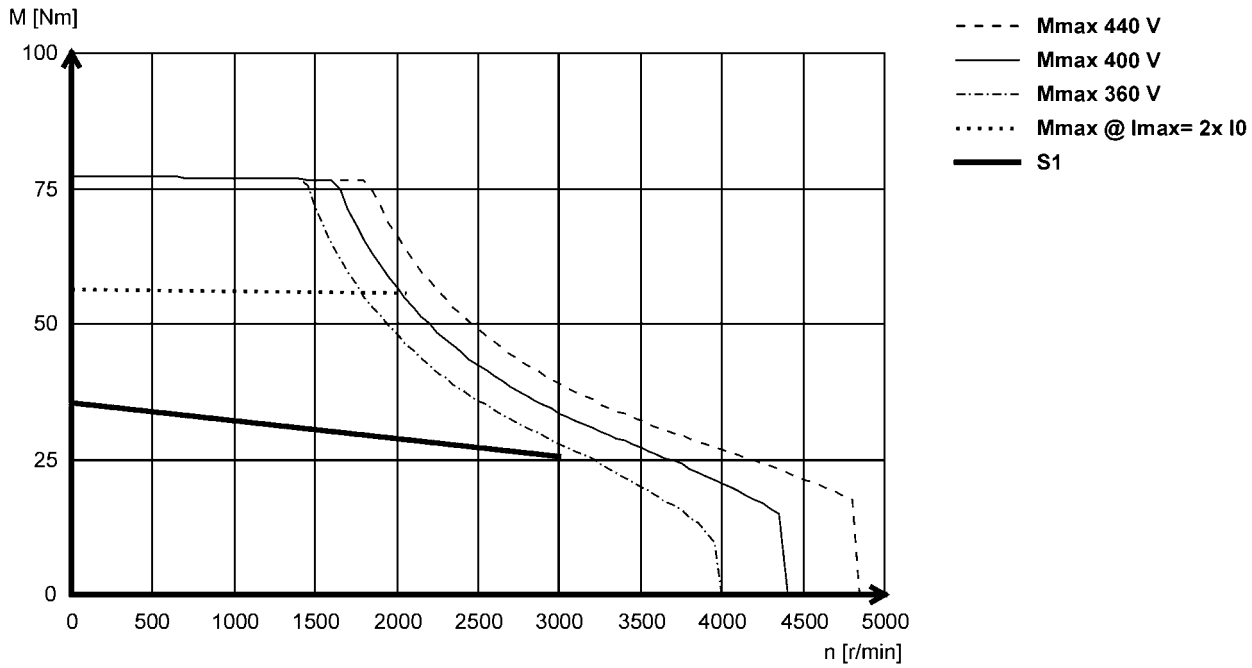

MCS14L32- (non-ventilated)

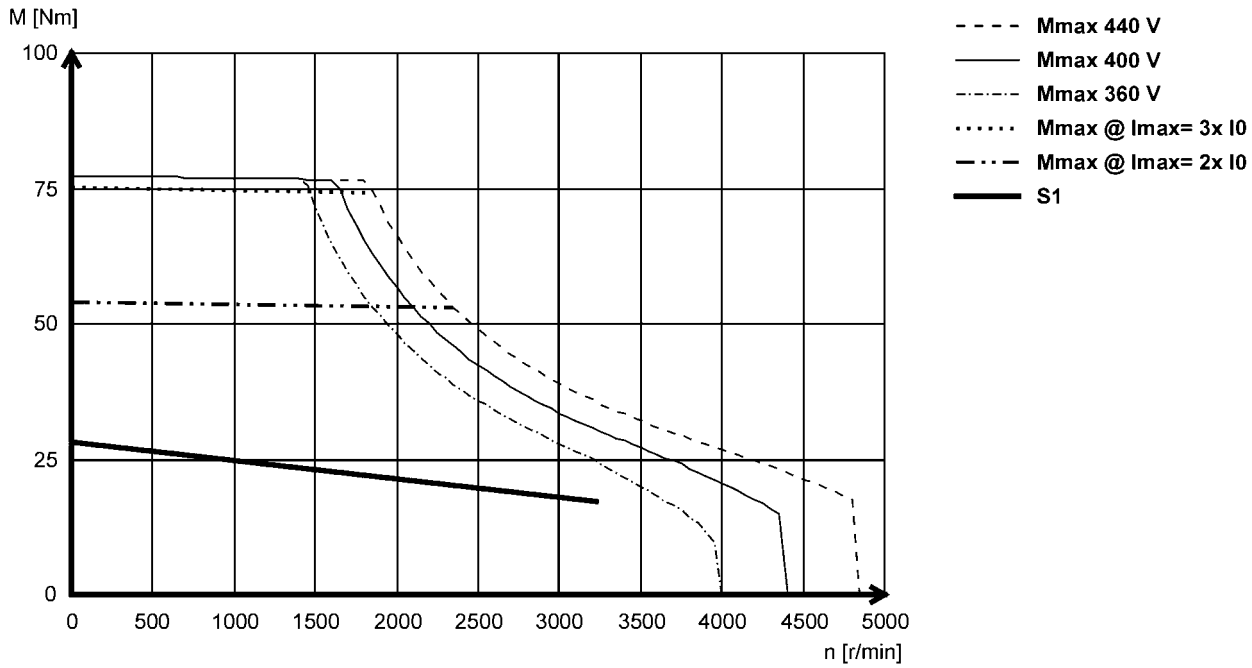



Torque characteristics

- The data applies to a mains connection voltage of 3 x 400 V.
- You can find further torque characteristics at **www.lenze.de/dsc**.

MCS14P11- (forced ventilated)

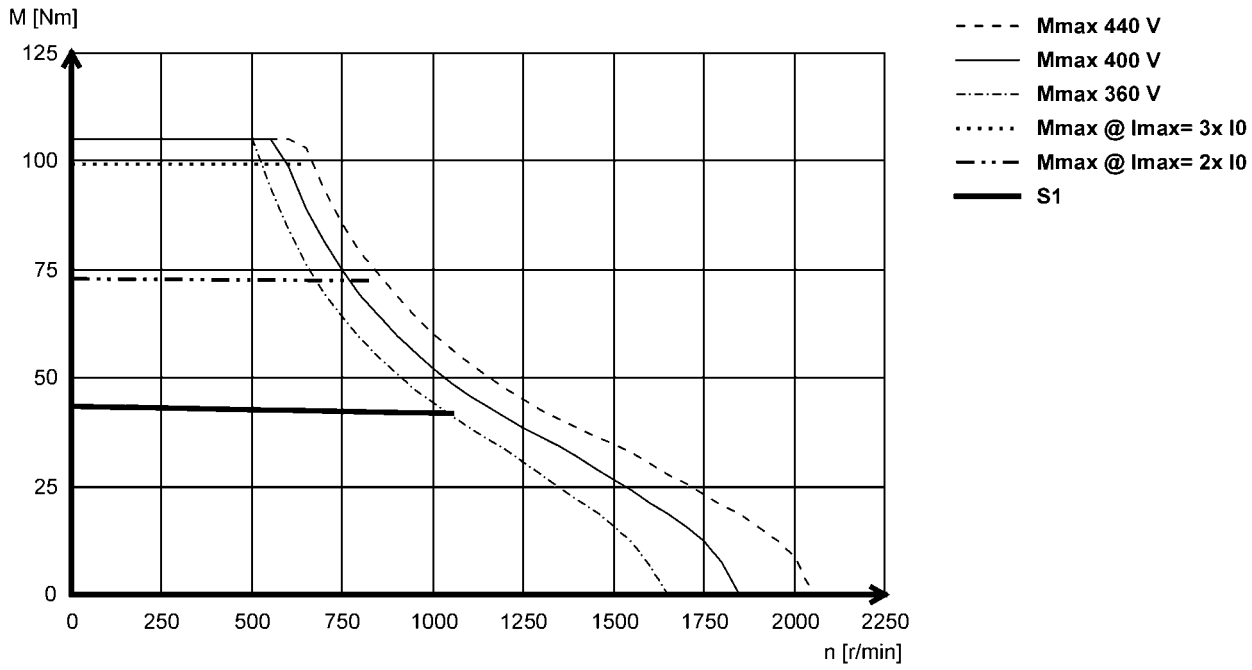

MCS14P14- (non-ventilated)

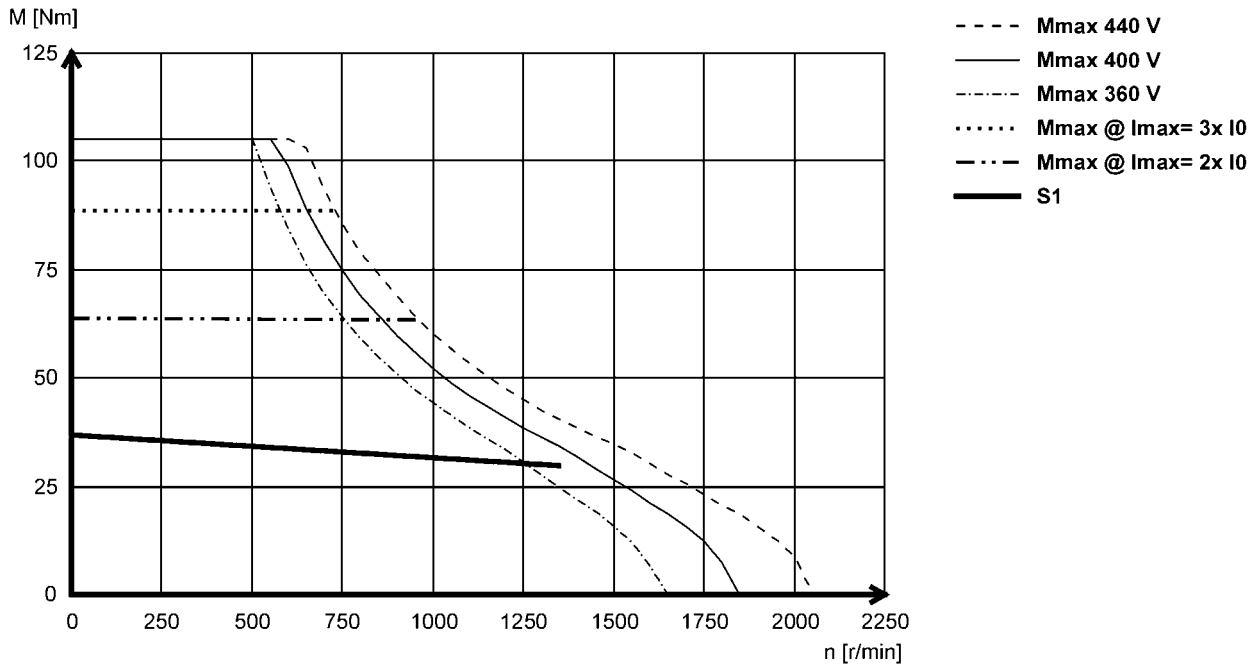



Torque characteristics

- The data applies to a mains connection voltage of 3 x 400 V.
- You can find further torque characteristics at **www.lenze.de/dsc**.

MCS14P26- (forced ventilated)

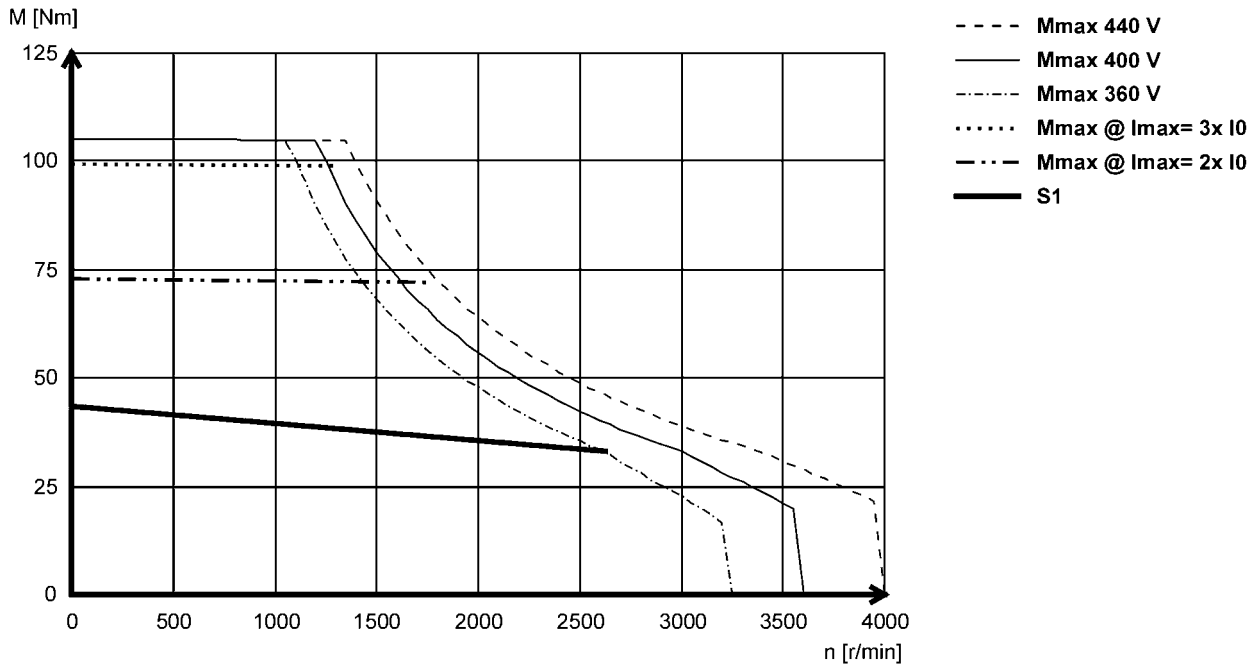

MCS14P32- (non-ventilated)

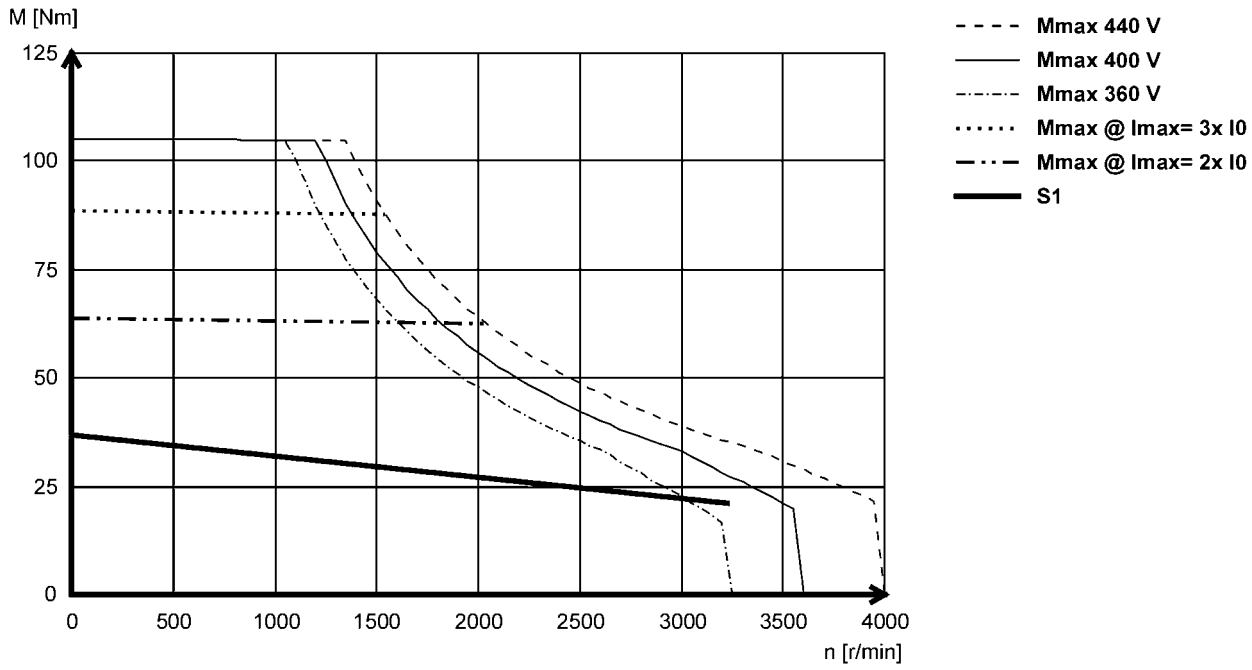



Torque characteristics

- The data applies to a mains connection voltage of 3 x 400 V.
- You can find further torque characteristics at **www.lenze.de/dsc**.

MCS19F12- (forced ventilated)

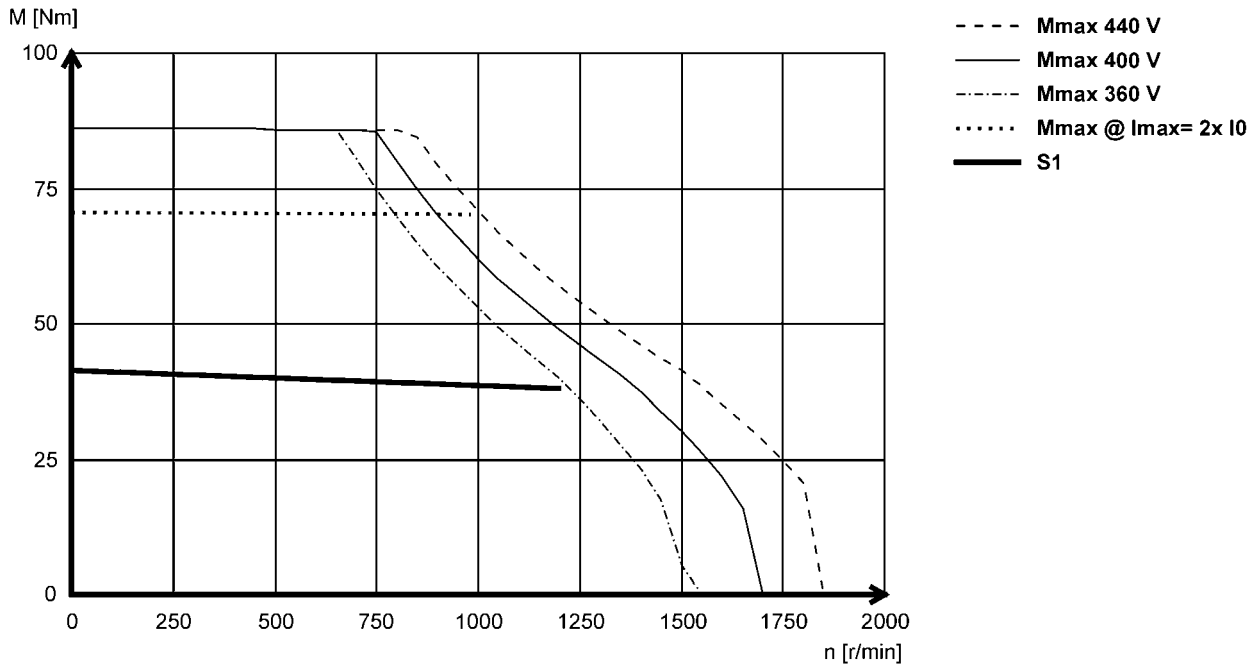

MCS19F14- (non-ventilated)

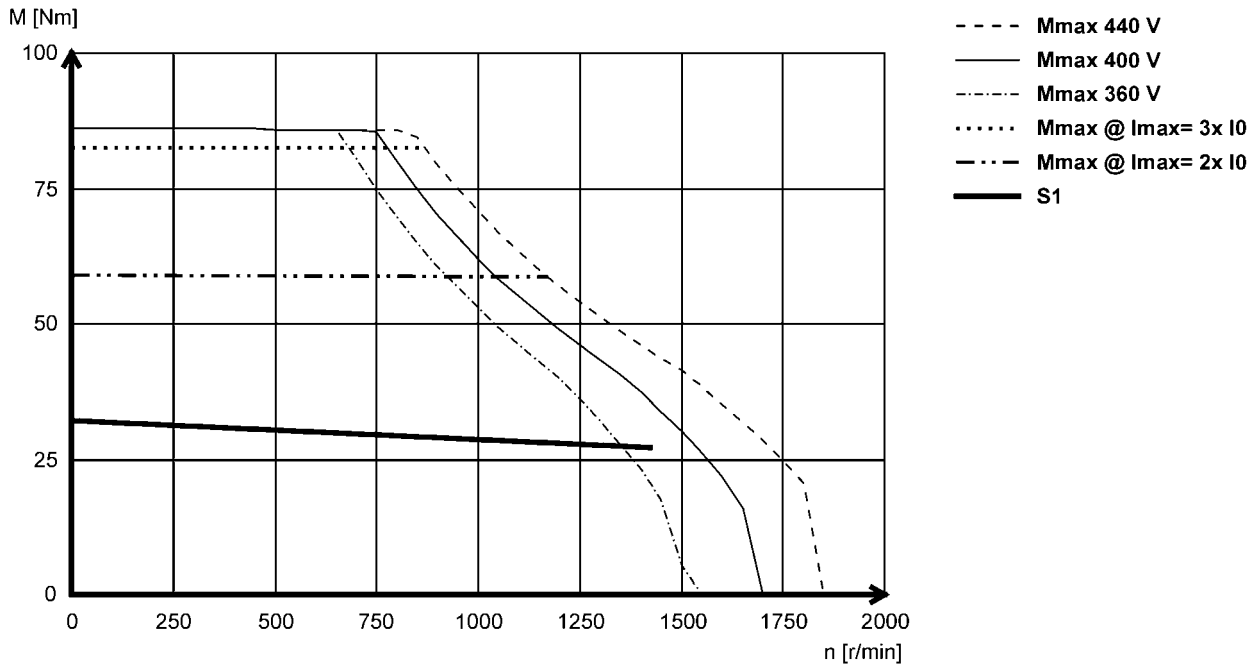



Torque characteristics

- The data applies to a mains connection voltage of 3 x 400 V.
- You can find further torque characteristics at **www.lenze.de/dsc**.

MCS19F29- (forced ventilated)

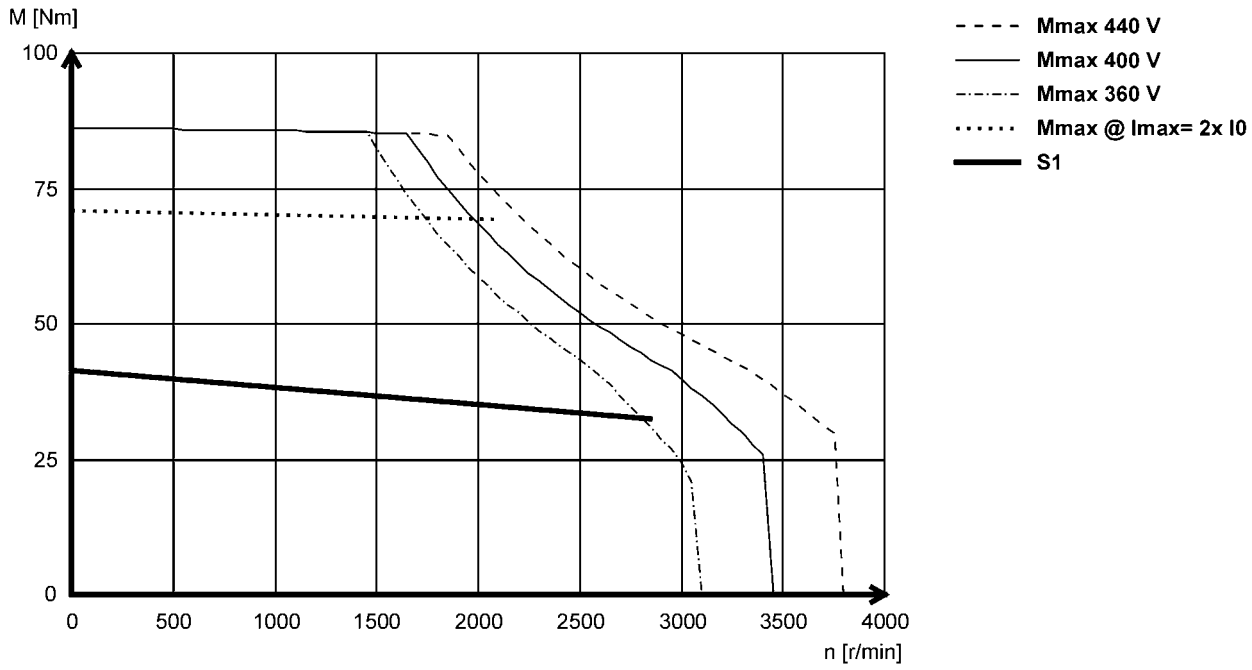

MCS19F30- (non-ventilated)

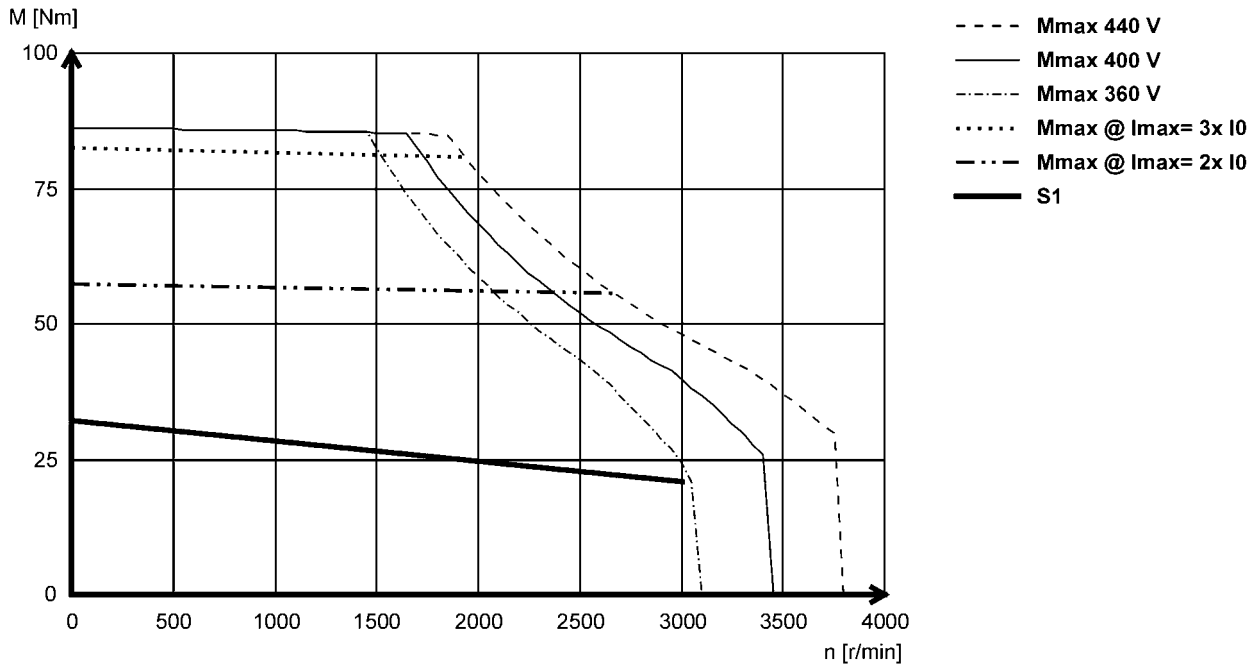



Torque characteristics

- The data applies to a mains connection voltage of 3 x 400 V.
- You can find further torque characteristics at **www.lenze.de/dsc**.

MCS19J12- (forced ventilated)

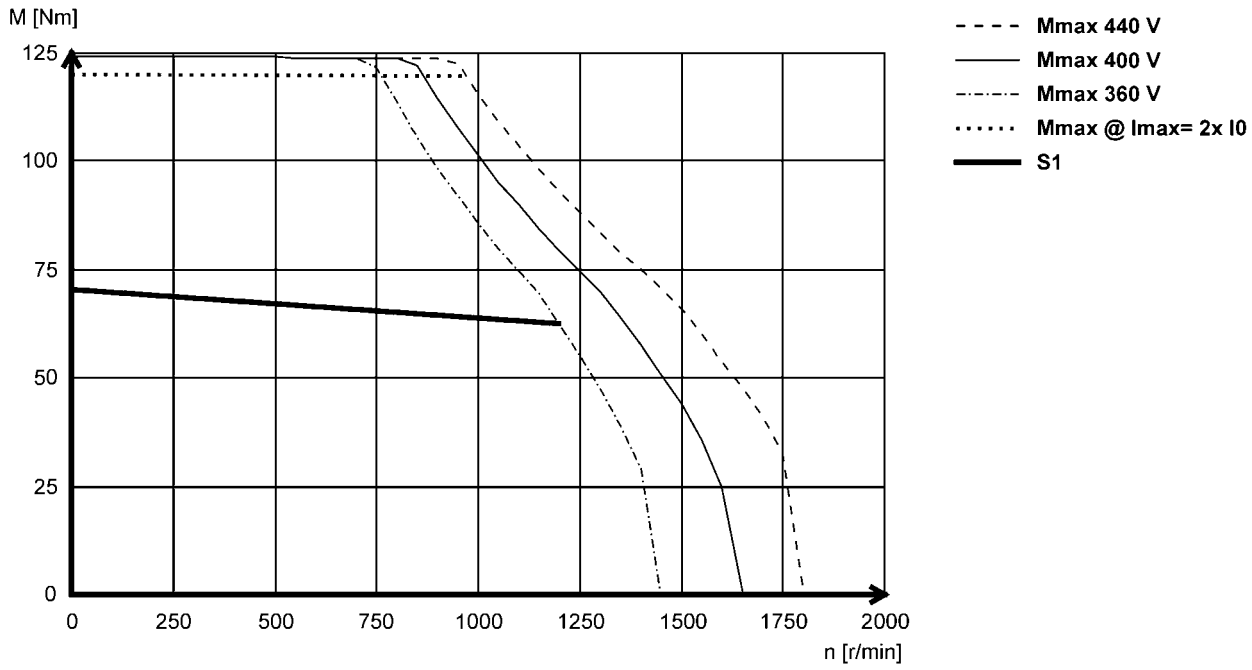

MCS19J14- (non-ventilated)

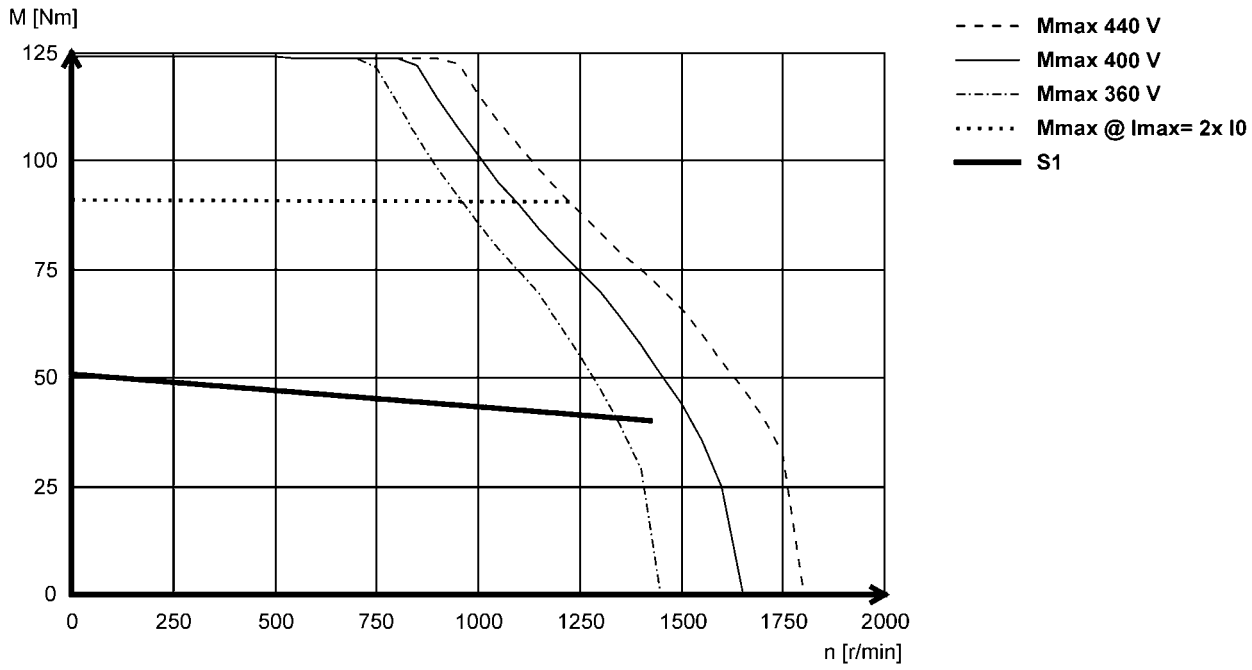



Torque characteristics

- The data applies to a mains connection voltage of 3 x 400 V.
- You can find further torque characteristics at **www.lenze.de/dsc**.

MCS19J29- (forced ventilated)

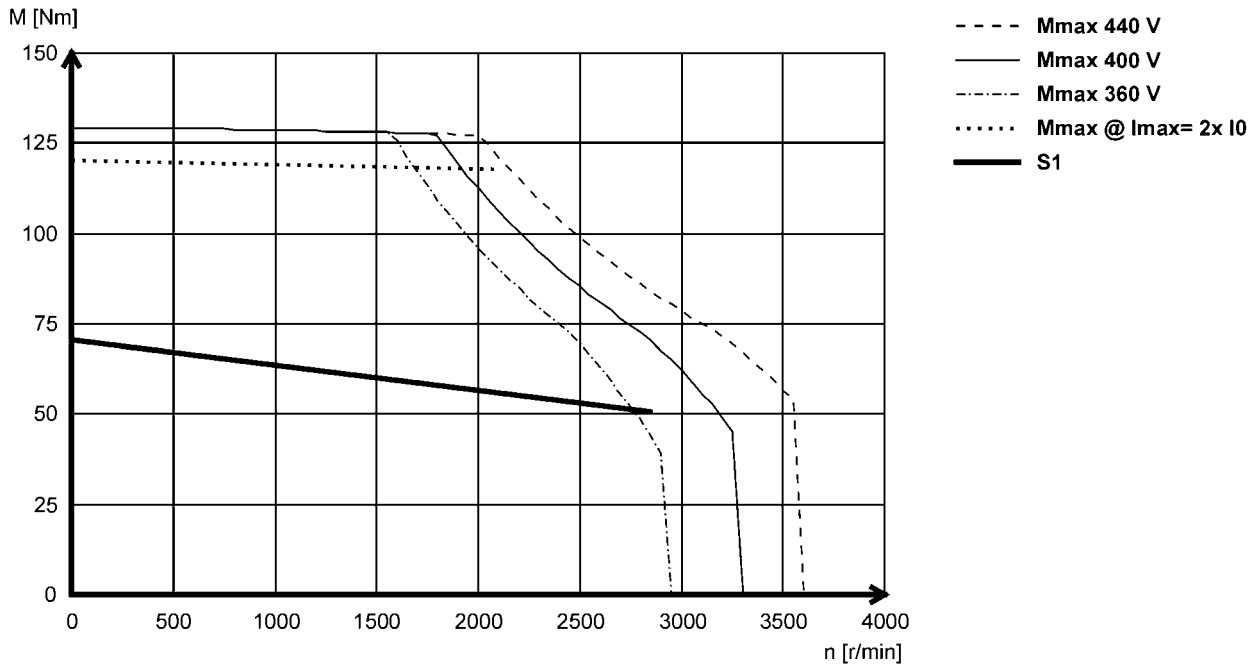

MCS19J30- (non-ventilated)

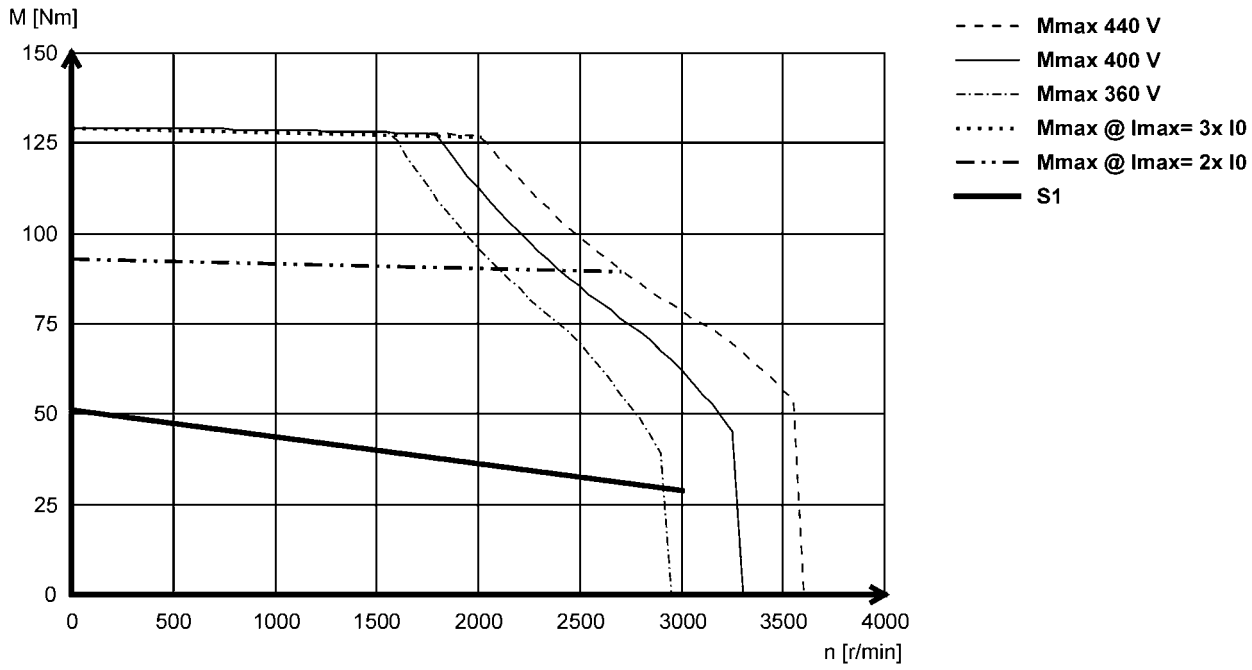



Torque characteristics

- The data applies to a mains connection voltage of 3 x 400 V.
- You can find further torque characteristics at **www.lenze.de/dsc**.

MCS19P12 (forced ventilated)

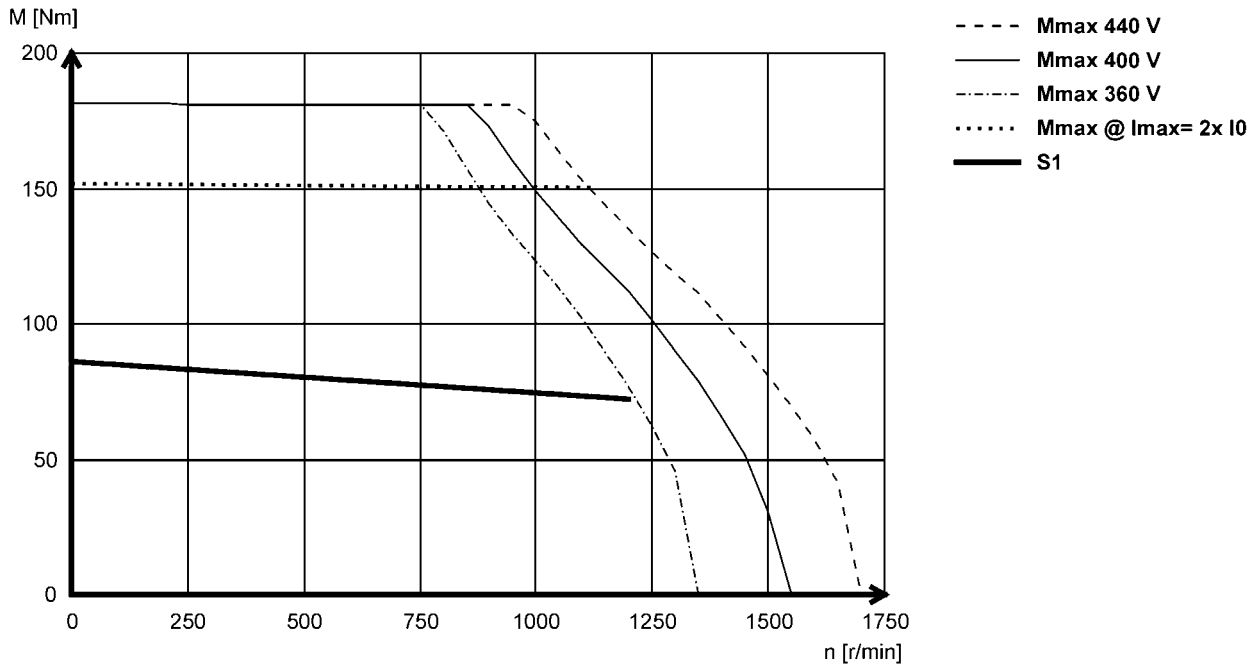

MCS19P14- (non-ventilated)

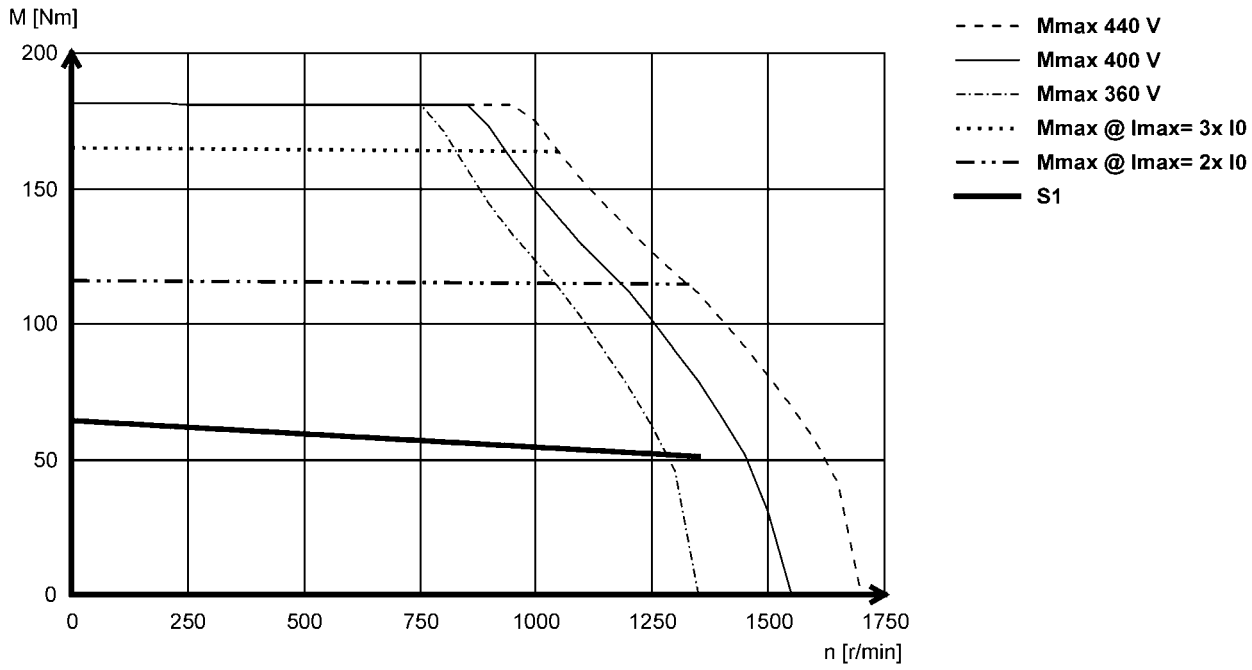



Torque characteristics

- The data applies to a mains connection voltage of 3 x 400 V.
- You can find further torque characteristics at **www.lenze.de/dsc**.

MCS19P29- (forced ventilated)

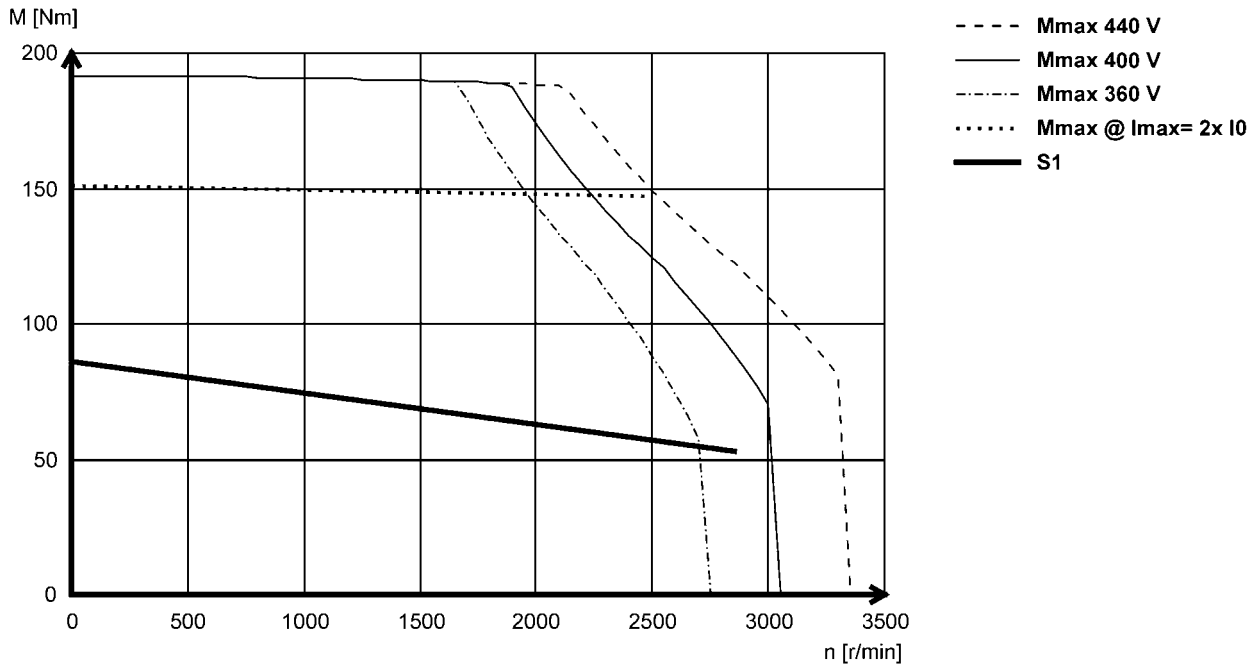

MCS19P30- (non-ventilated)

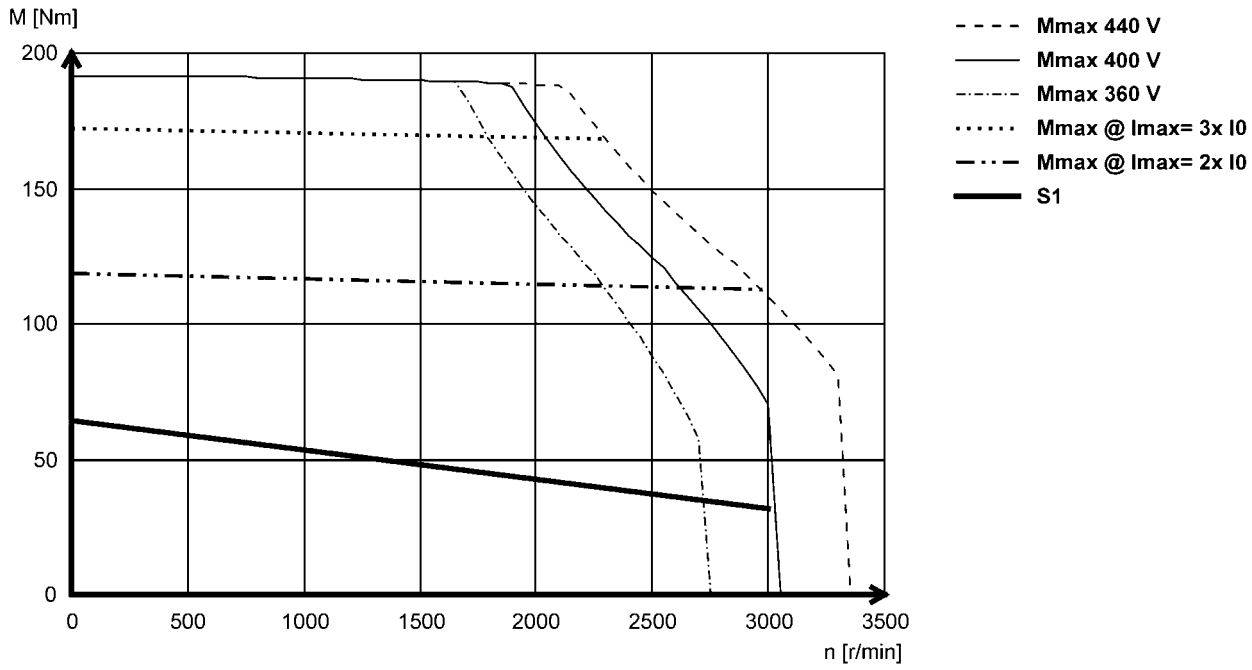



Torque characteristics

- The data applies to a mains connection voltage of 3 x 230 V.
- You can find further torque characteristics at **www.lenze.de/dsc**.

MCS06C41L (non-ventilated)

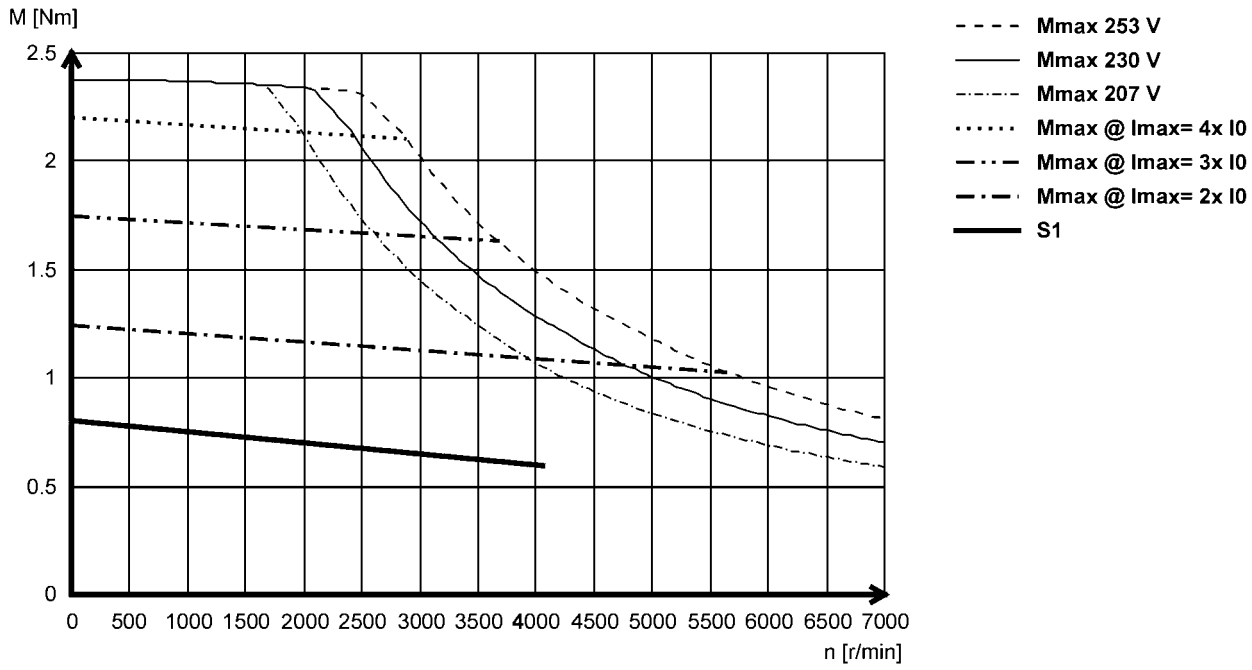

MCS06C60L (non-ventilated)

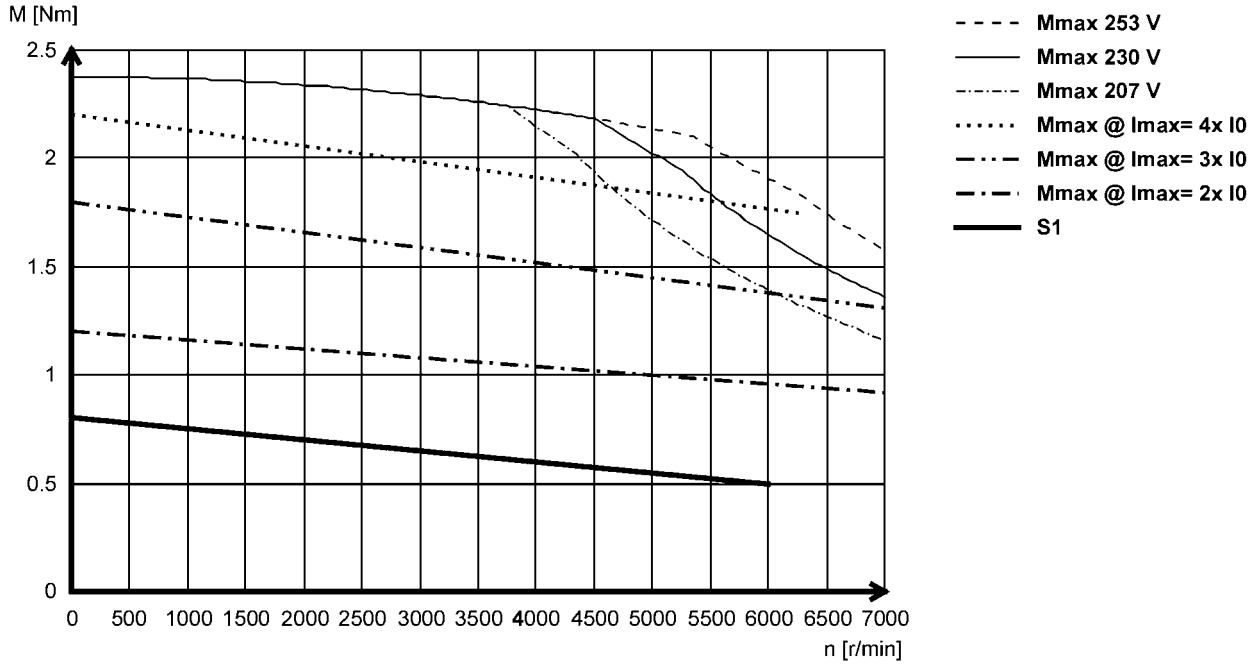



Torque characteristics

- The data applies to a mains connection voltage of 3 x 230 V.
- You can find further torque characteristics at **www.lenze.de/dsc**.

MCS06F41L (non-ventilated)

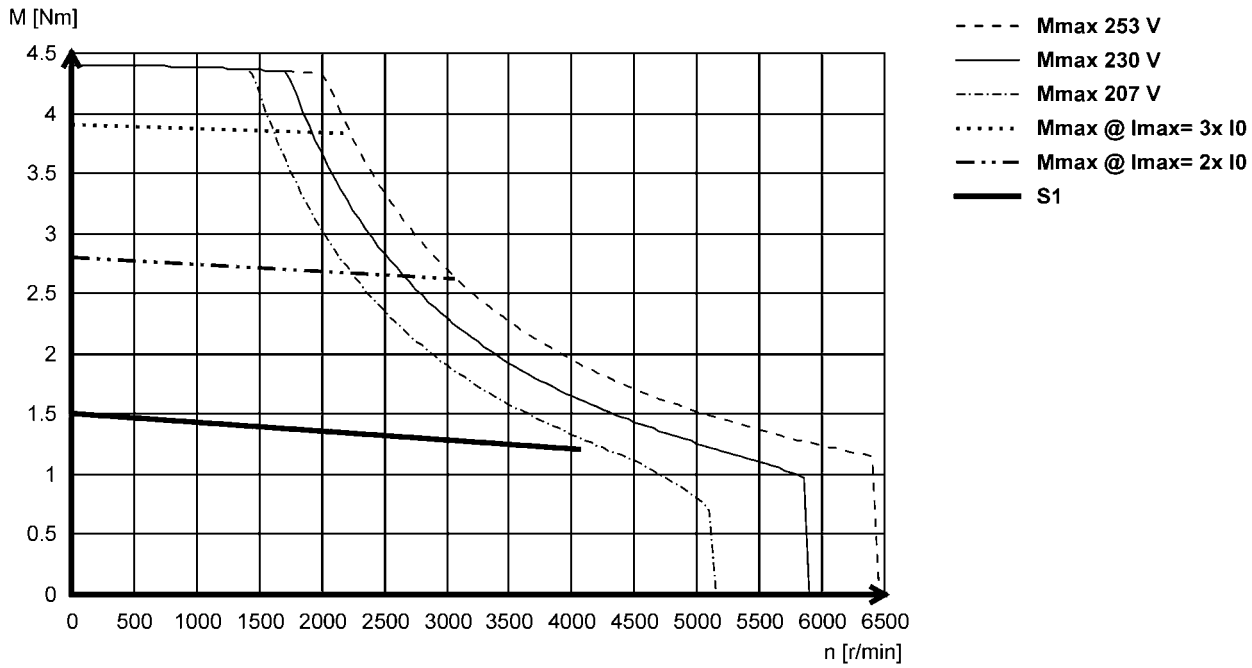

MCS06F60L (non-ventilated)

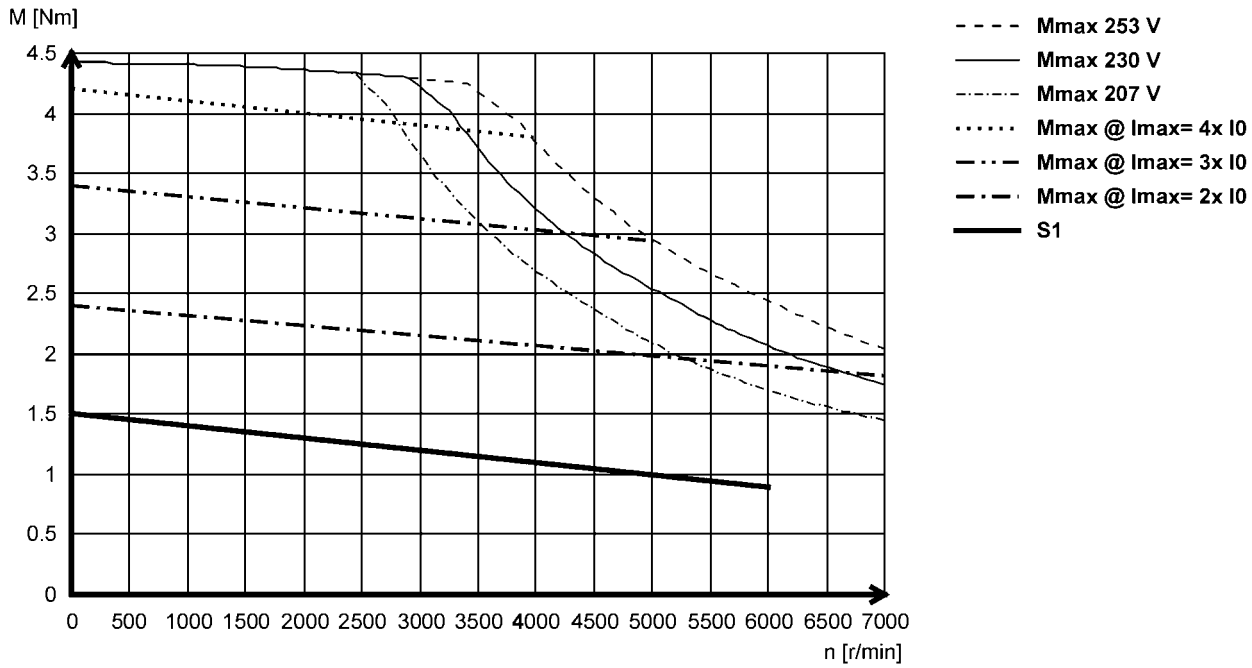



Torque characteristics

- The data applies to a mains connection voltage of 3 x 230 V.
- You can find further torque characteristics at **www.lenze.de/dsc**.

MCS06I41L (non-ventilated)

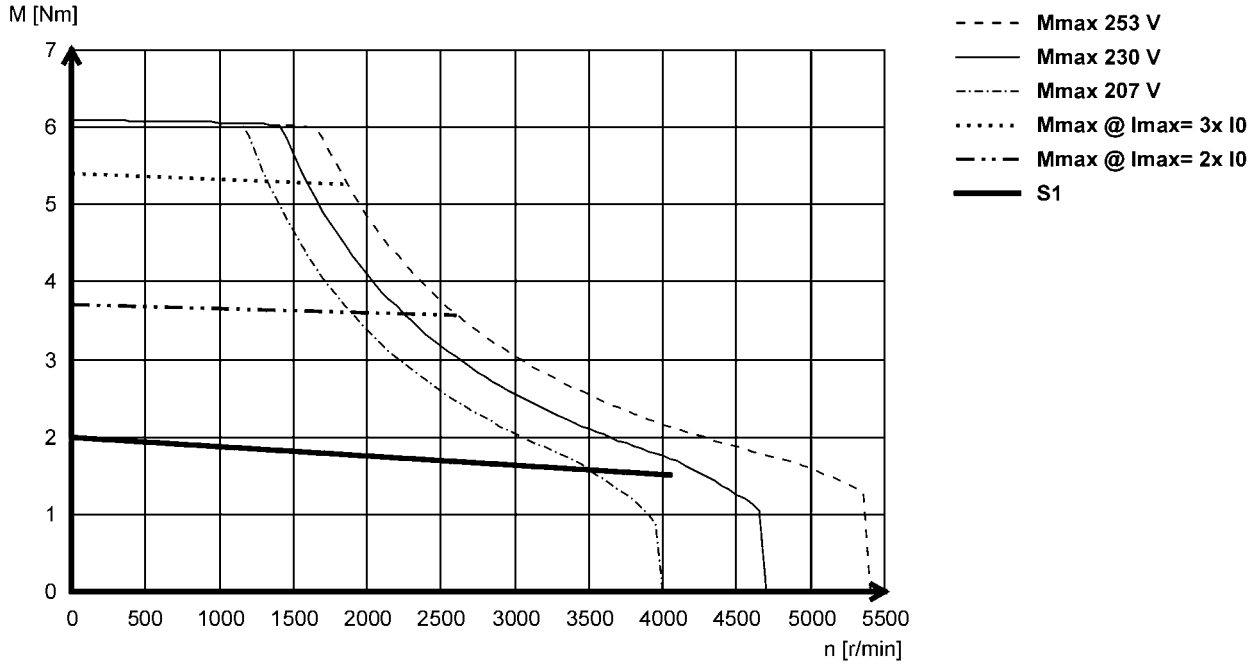

MCS06I60L (non-ventilated)

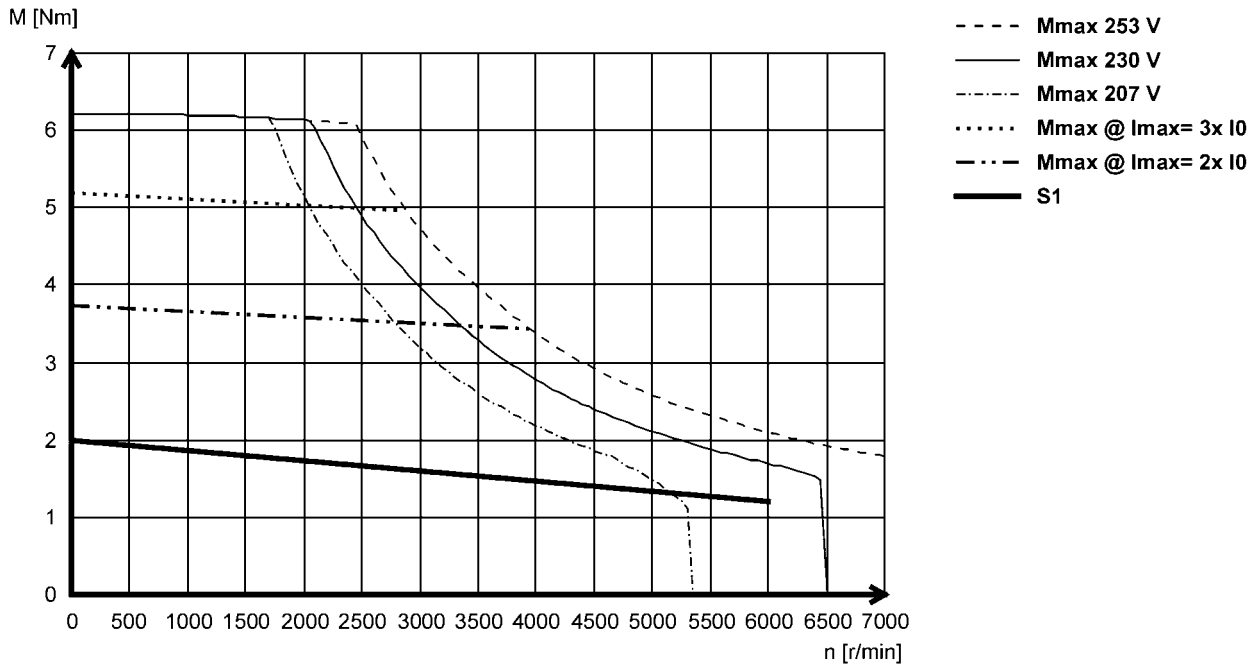



Torque characteristics

- The data applies to a mains connection voltage of 3 x 230 V.
- You can find further torque characteristics at **www.lenze.de/dsc**.

MCS09D41L (non-ventilated)

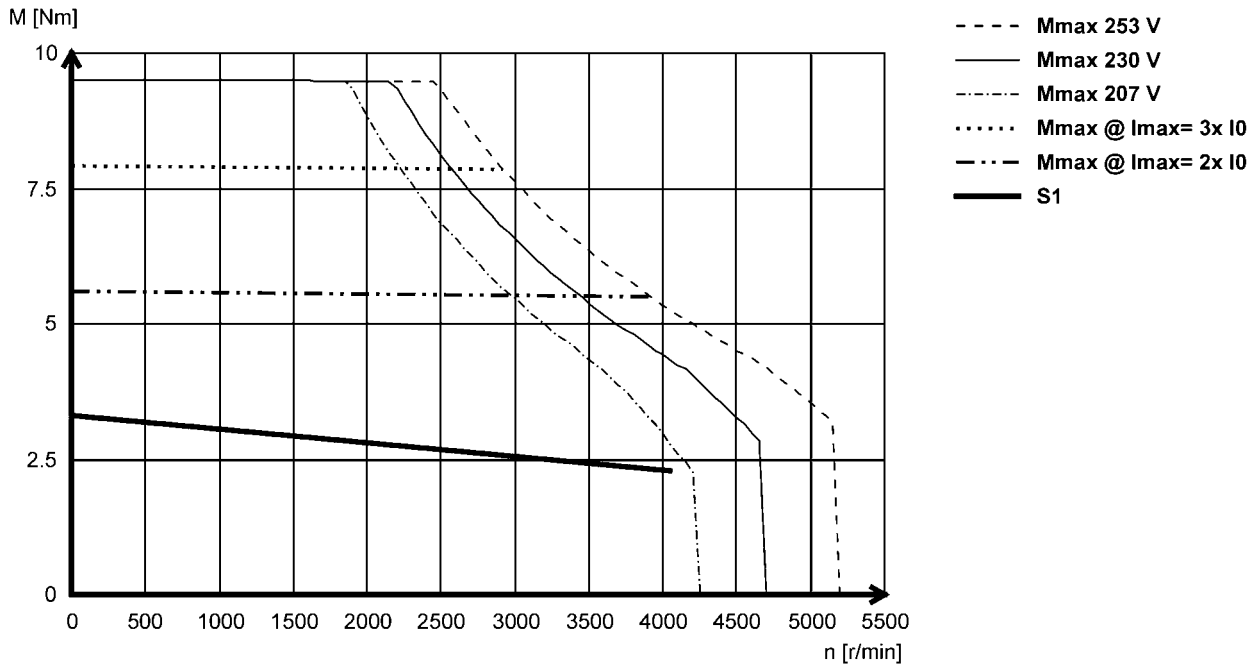

MCS09D60L (non-ventilated)

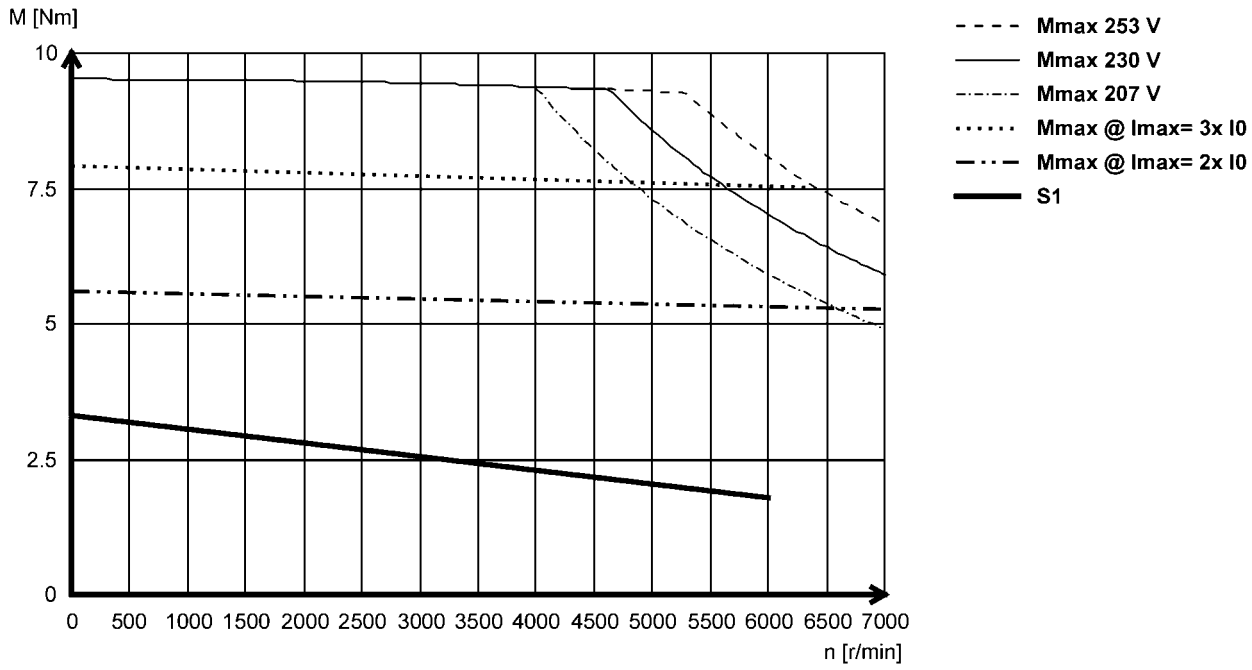



Torque characteristics

- The data applies to a mains connection voltage of 3 x 230 V.
- You can find further torque characteristics at **www.lenze.de/dsc**.

MCS09F38L (non-ventilated)

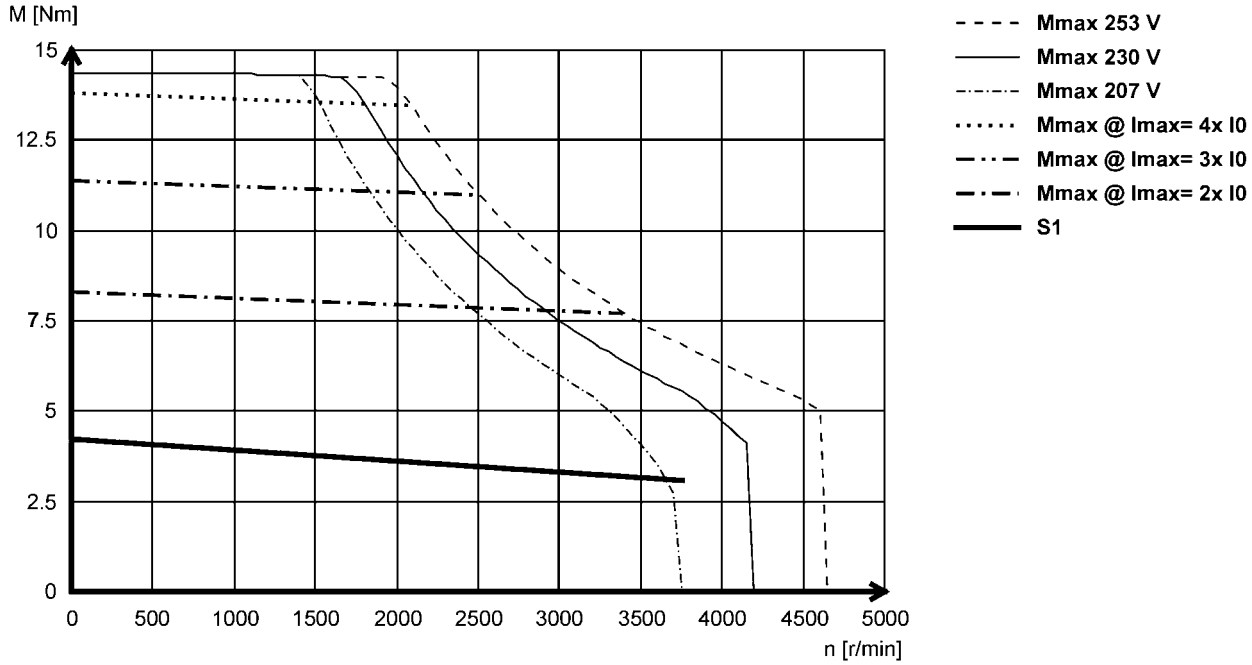

MCS09F60L (non-ventilated)

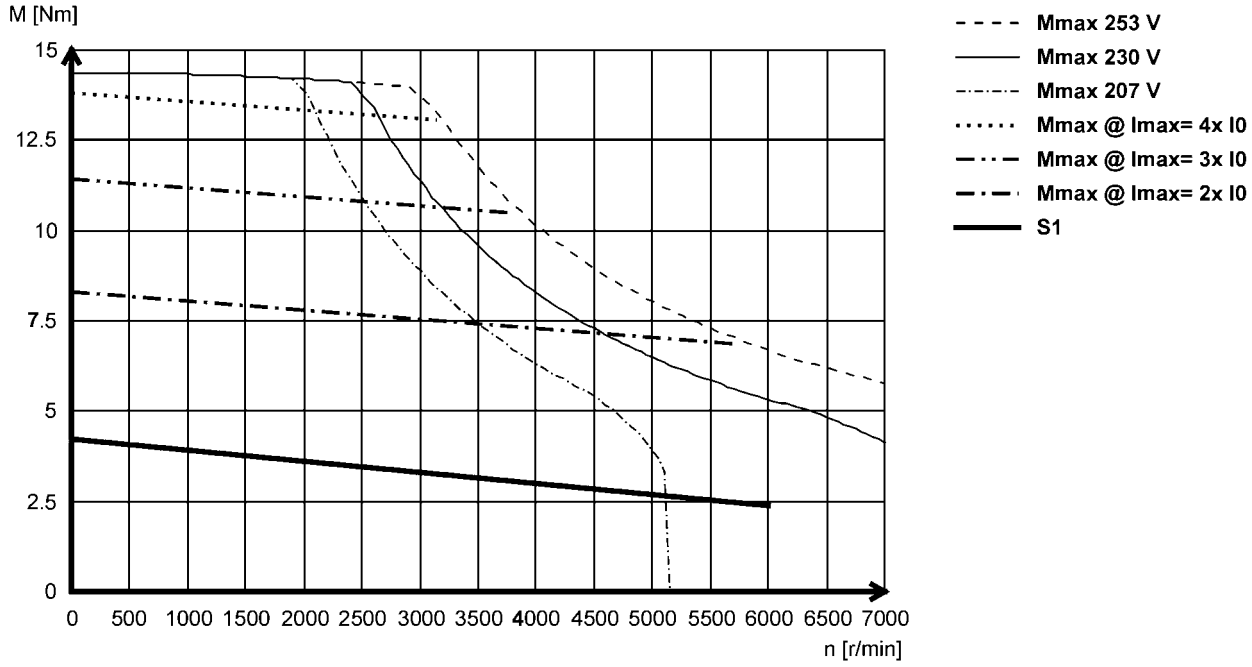



Torque characteristics

- The data applies to a mains connection voltage of 3 x 230 V.
- You can find further torque characteristics at **www.lenze.de/dsc**.

MCS09H41L (non-ventilated)

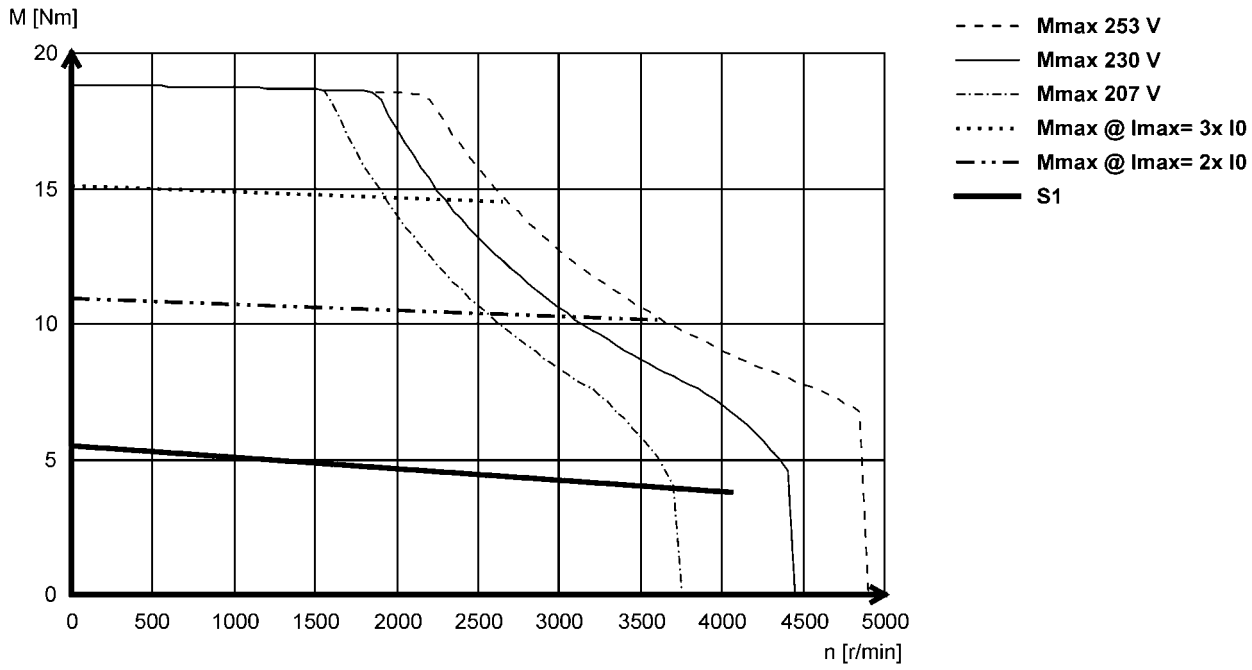

MCS09H60L (non-ventilated)

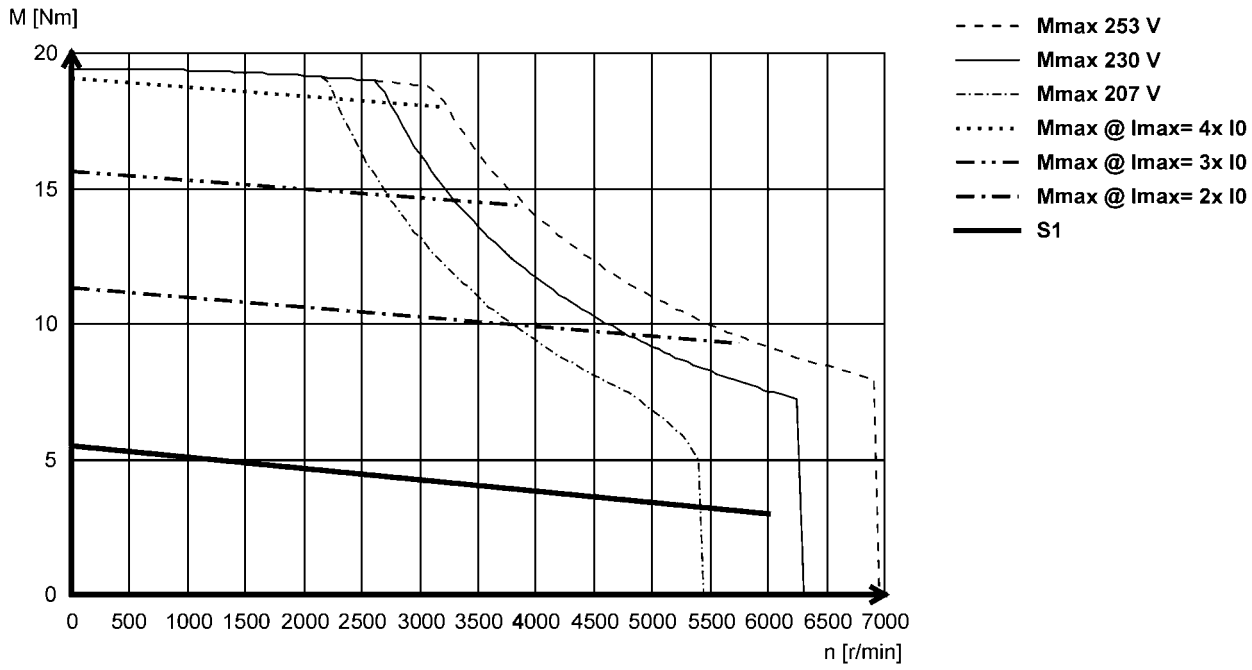



Torque characteristics

- The data applies to a mains connection voltage of 3 x 230 V.
- You can find further torque characteristics at **www.lenze.de/dsc**.

MCS09L41L (non-ventilated)

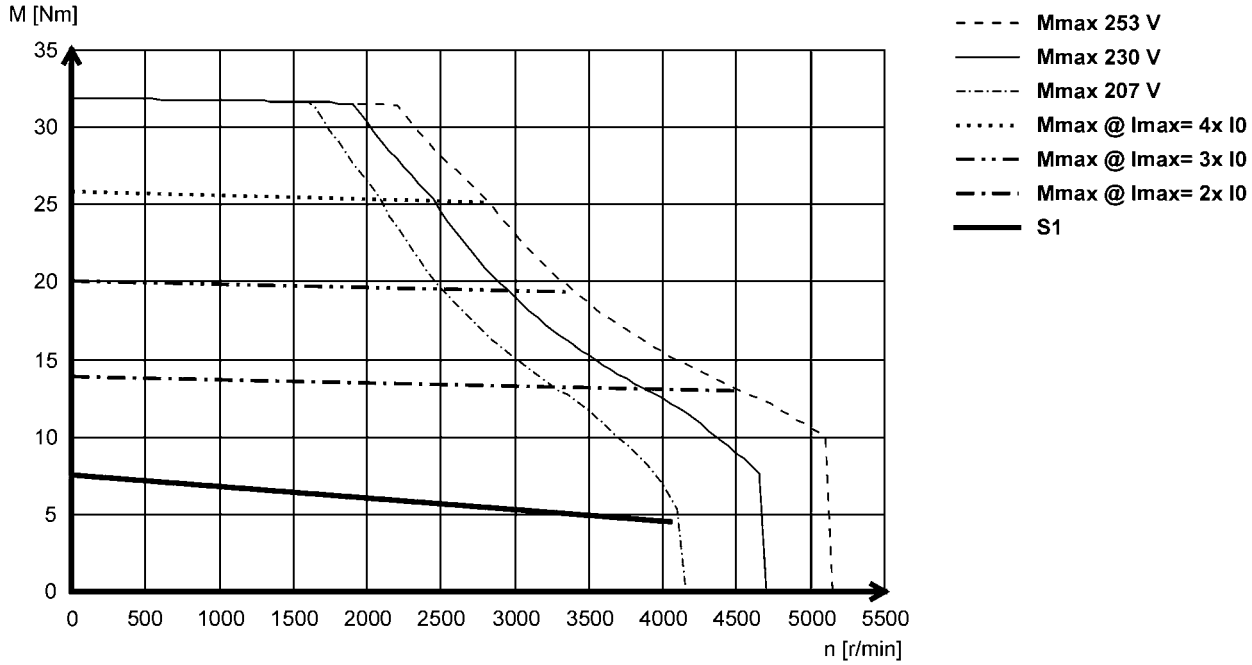



Torque characteristics

- The data applies to a mains connection voltage of 3 x 230 V.
- You can find further torque characteristics at **www.lenze.de/dsc**.

MCS12D20L (non-ventilated)

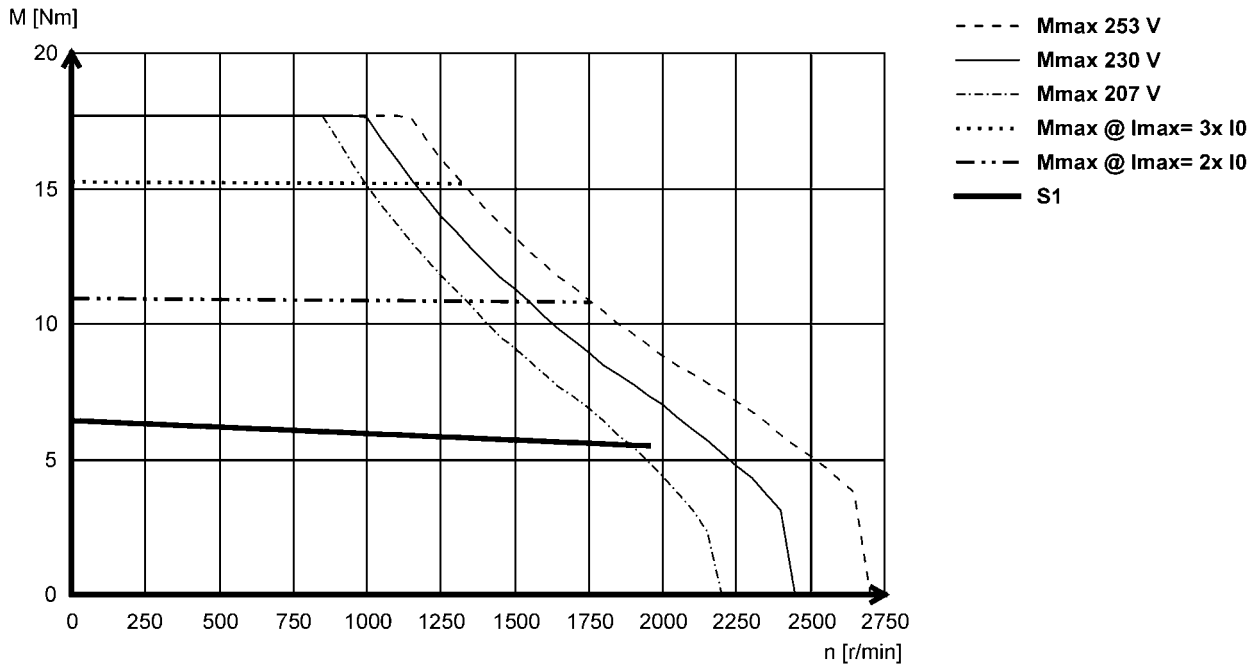

MCS12D41L (non-ventilated)

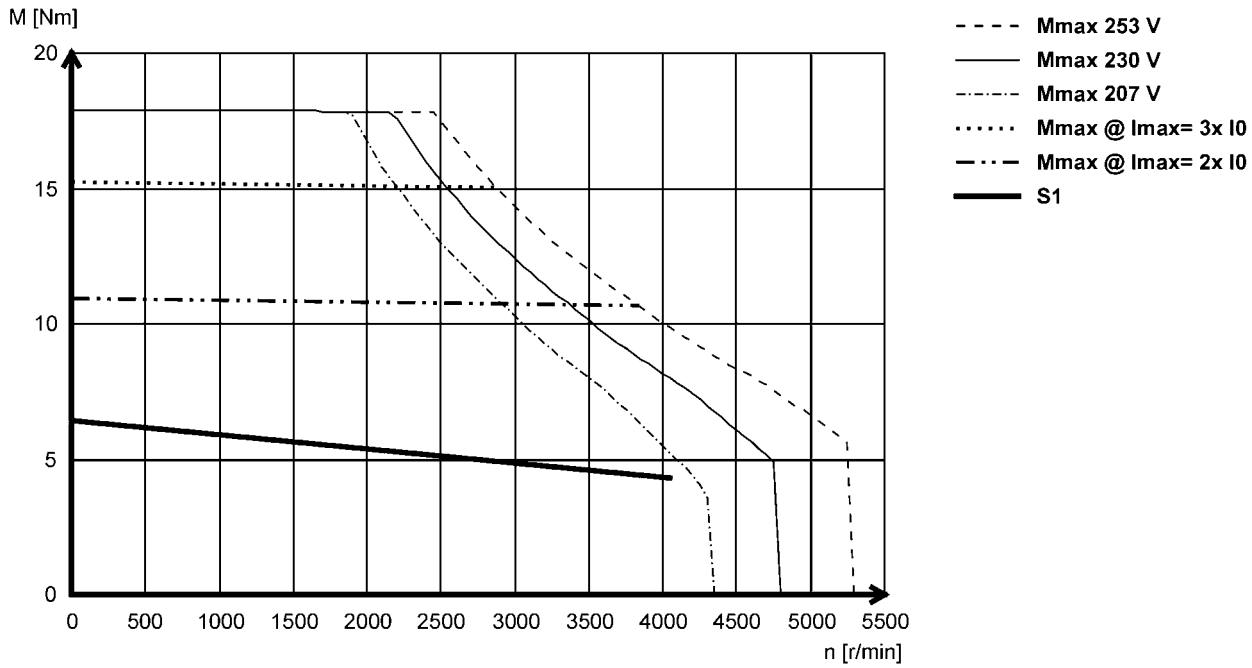



Torque characteristics

- The data applies to a mains connection voltage of 3 x 230 V.
- You can find further torque characteristics at **www.lenze.de/dsc**.

MCS12H15L (non-ventilated)

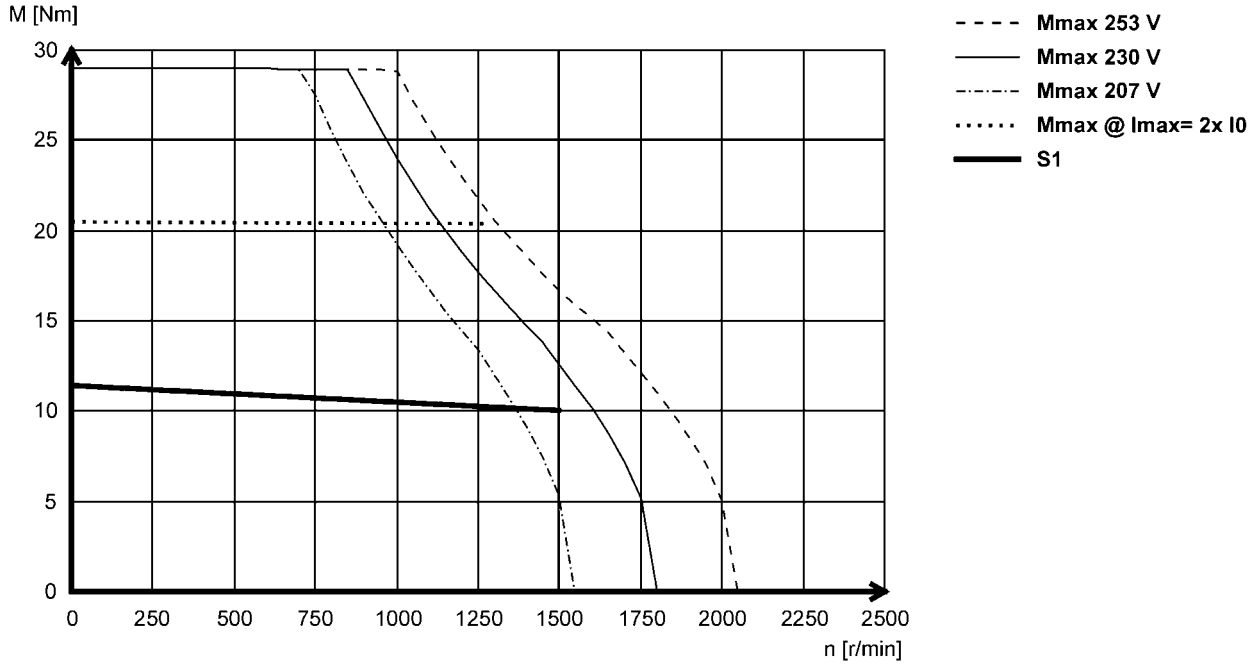

MCS12H30L- (non-ventilated)

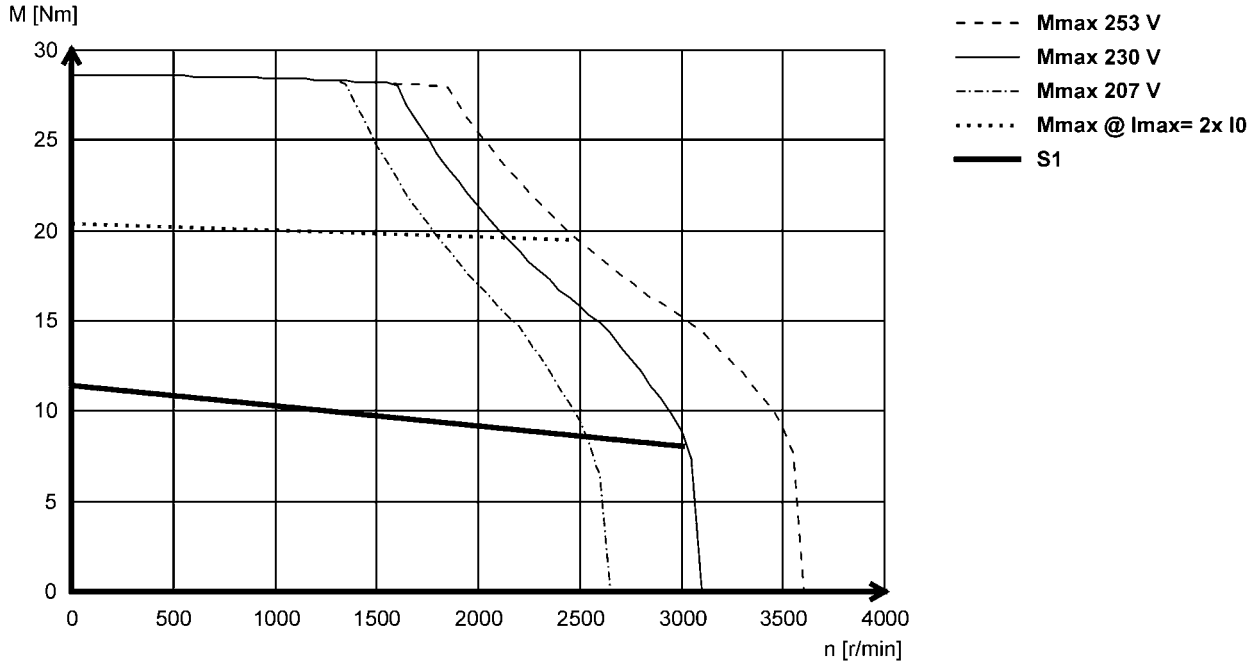



Torque characteristics

- The data applies to a mains connection voltage of 3 x 230 V.
- You can find further torque characteristics at **www.lenze.de/dsc**.

MCS12L20L (non-ventilated)

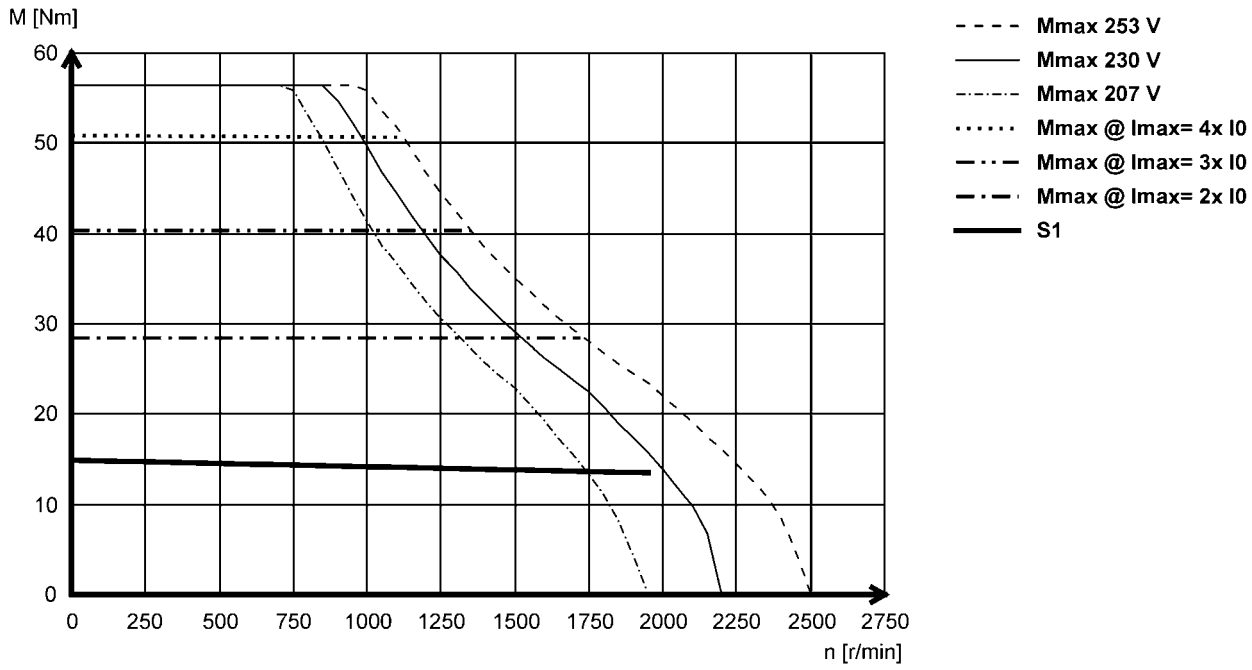



Dimensions, self-ventilated

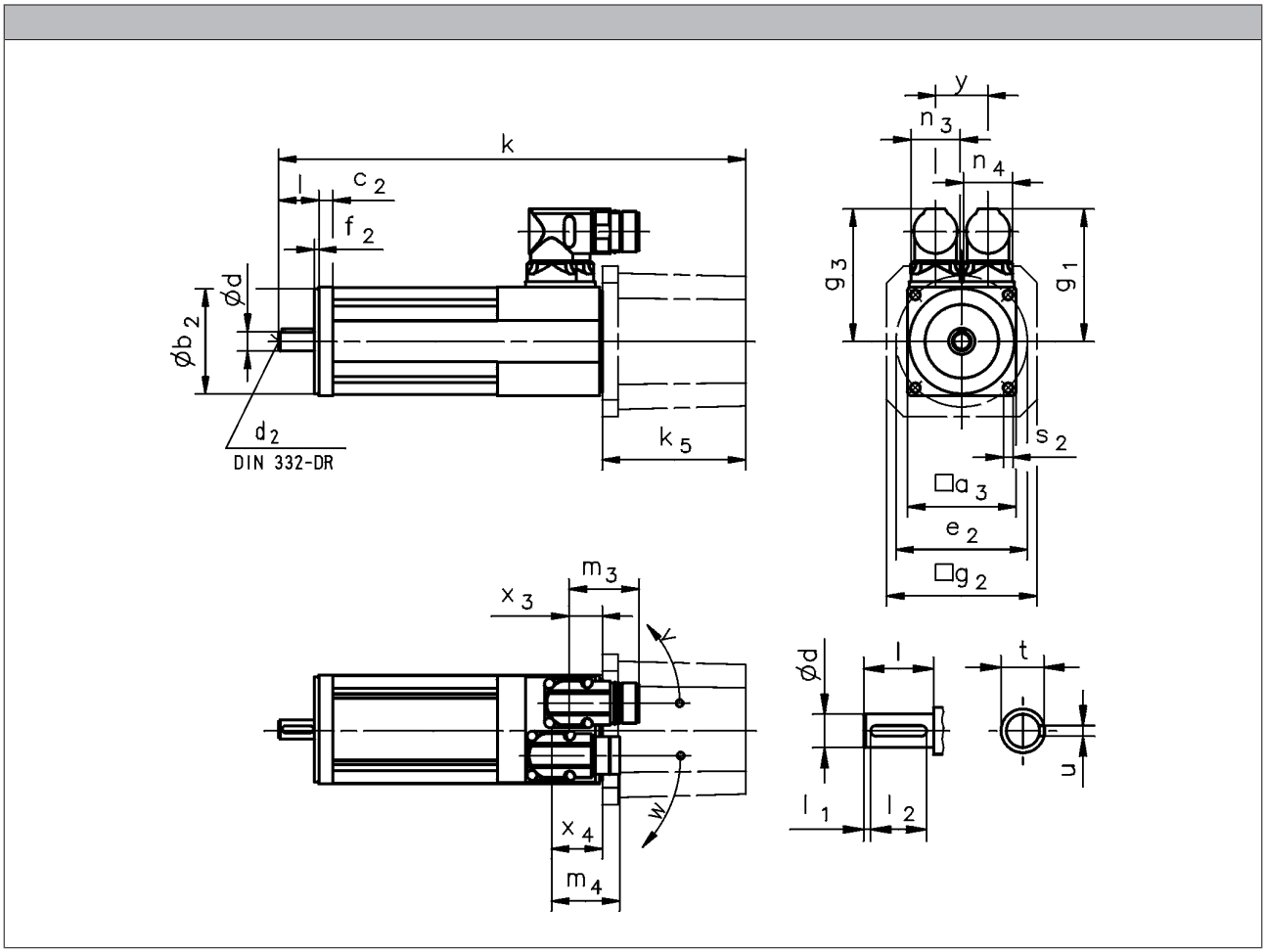

			MCS06C	MCS06F	MCS06I
R□0 / C40 B0	k	[mm]	155	185	215
R□0 / C40 P□	k	[mm]	174	204	233
SR□ / SV□ / E□□ B0	k	[mm]	237	266	297
SR□ / SV□ / E□□ P□	k	[mm]	255	285	315
SR□ / SV□ / E□□	k_5	[mm]	82.0		
	g_2	[mm]	86.0		
SKM BO	k	[mm]	190	220	250
SKM P□	k	[mm]	209	239	268
SKM	k_5	[mm]	35.0		
	g_2	[mm]	62.0		

► Speed / angle sensor: R□□ / C□□ / S□□ / E□□
► Brake: B0 / P□

6.11



Dimensions, self-ventilated

	g_1	g_3	x_3	x_4	m_3	m_4	n_3	n_4	y	v	w
	[mm]	[mm]	[mm]	[mm]	[mm]	[mm]	[mm]	[mm]	[mm]	[°]	[°]
MCS06	77	77	19	29	40	40	28	28	30	190	230

	d	d_2	l	l_1	l_2	u	t
	k6		-0.7 ... 0.3				
	[mm]	[mm]		[mm]	[mm]	[mm]	[mm]
MCS06	11	M4	23	2.0	18	4.0	12.5

	a_3	b_2	c_2	e_2	f_2	s_2
		j6				
	[mm]	[mm]	[mm]	[mm]	[mm]	[mm]
MCS06	62	60	8	75	2.5	5.5



Dimensions, self-ventilated

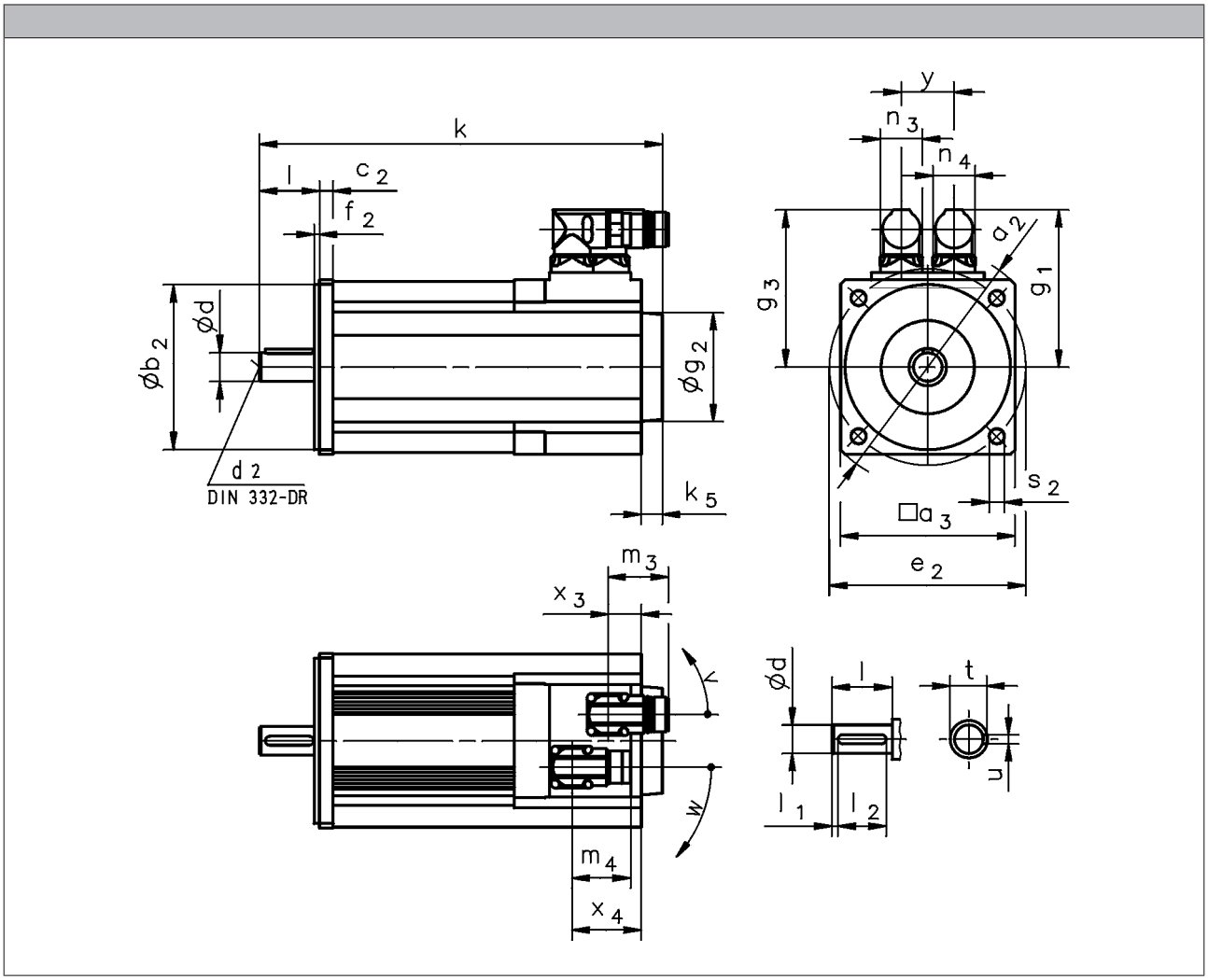

			MCS09D	MCS09F	MCS09H	MCS09L	MCS12D	MCS12H	MCS12L
R□0 / C40 B0	k	[mm]	213	233	253	293	228	268	308
R□0 / C40 P□	k	[mm]	233	253	273	313	248	288	328
R□0 / C40	k_5	[mm]	13				14		
	g_2	[mm]	67				72		
S□□ / E□□ B0	k	[mm]	264	284	304	344	277	317	357
S□□ / E□□ P□	k	[mm]	284	304	324	364	297	337	377
S□□ / E□□	k_5	[mm]	64				63		
	g_2	[mm]	81				89		

			MCS14D	MCS14H	MCS14L	MCS14P	MCS19F	MCS19J	MCS19P
R□0 / C40 B0	k	[mm]	251	291	331	371	280	320	380
R□0 / C40 P□	k	[mm]	279	319	359	399	314	364	424
R□0 / C40	k_5	[mm]	24				15		
	g_2	[mm]	78						
S□□ / E□□ B0	k	[mm]	301	341	381	421	329	369	429
S□□ / E□□ P□	k	[mm]	329	369	409	449	363	413	473
S□□ / E□□	k_5	[mm]	74				64		
	g_2	[mm]	101						

- Speed / angle sensor: R□□ / C□□ / S□□ / E□□
- Brake: B0 / P□



Dimensions, self-ventilated

	g_1	g_3	x_3	x_4	m_3	m_4	n_3	n_4	y	v	w
	[mm]	[mm]	[mm]	[mm]	[mm]	[mm]	[mm]	[mm]	[mm]	[°]	[°]
MCS09	90	90	20	44	40	40	28	28	35	195	260
MCS12	105	105	22	46							

	g_1	g_3	x_3	x_4	m_3	m_4	n_3	n_4	y	v	w
	[mm]	[mm]	[mm]	[mm]	[mm]	[mm]	[mm]	[mm]	[mm]	[°]	[°]
MCS14D15-	117	117	24	48	40	40	28	28	35	195	260
MCS14D36-											
MCS14H15-											
MCS14H32-											
MCS14L15-											
MCS14L32-	146	126	29	36		75		45		180	205
MCS14P14-	117	117	24	48		40		28		195	260
MCS14P32-	146	126	29	36		75		45		180	205
MCS19F14-	142	142	24 51 [1)]	48 75 [1)]		40		28		195	260
MCS19F30-	171	151	29 56 [1)]	36 63 [1)]		75		45		180	205
MCS19J14-	142	142	24 51 [1)]	48 75 [1)]		40		28		195	260
MCS19J30-	171	151	29 56 [1)]	36 63 [1)]		75		45		180	205
MCS19P14-	142	142	24 51 [1)]	48 75 [1)]		40		28		195	260
MCS19P30-	171	151	29 56 [1)]	36 63 [1)]		75		45		180	205

	d	d_2	l	l_1	l_2	u	t
	k6		-0.7 ... 0.3				
	[mm]	[mm]		[mm]	[mm]	[mm]	[mm]
MCS09	14	M5	30	2.5	25	5.0	16.0
MCS12	19	M6	40	4.0	32	6.0	21.5
MCS14	24	M8	50	5.0	40	8.0	27.0
MCS19	28	M10	60		50		31.0

	a_2	a_3	b_2	c_2	e_2	f_2	s_2
			j6				
	[mm]	[mm]	[mm]	[mm]	[mm]	[mm]	[mm]
MCS09	120	89	80	8	100	3.0	7.0
MCS12	160	116	110	9	130	3.5	10.0
MCS14	188	143	130	13	165		12.0
MCS19	250	192	180	11	215	4.0	14.0

[1)] On version with brake (P□)



Dimensions, forced ventilated

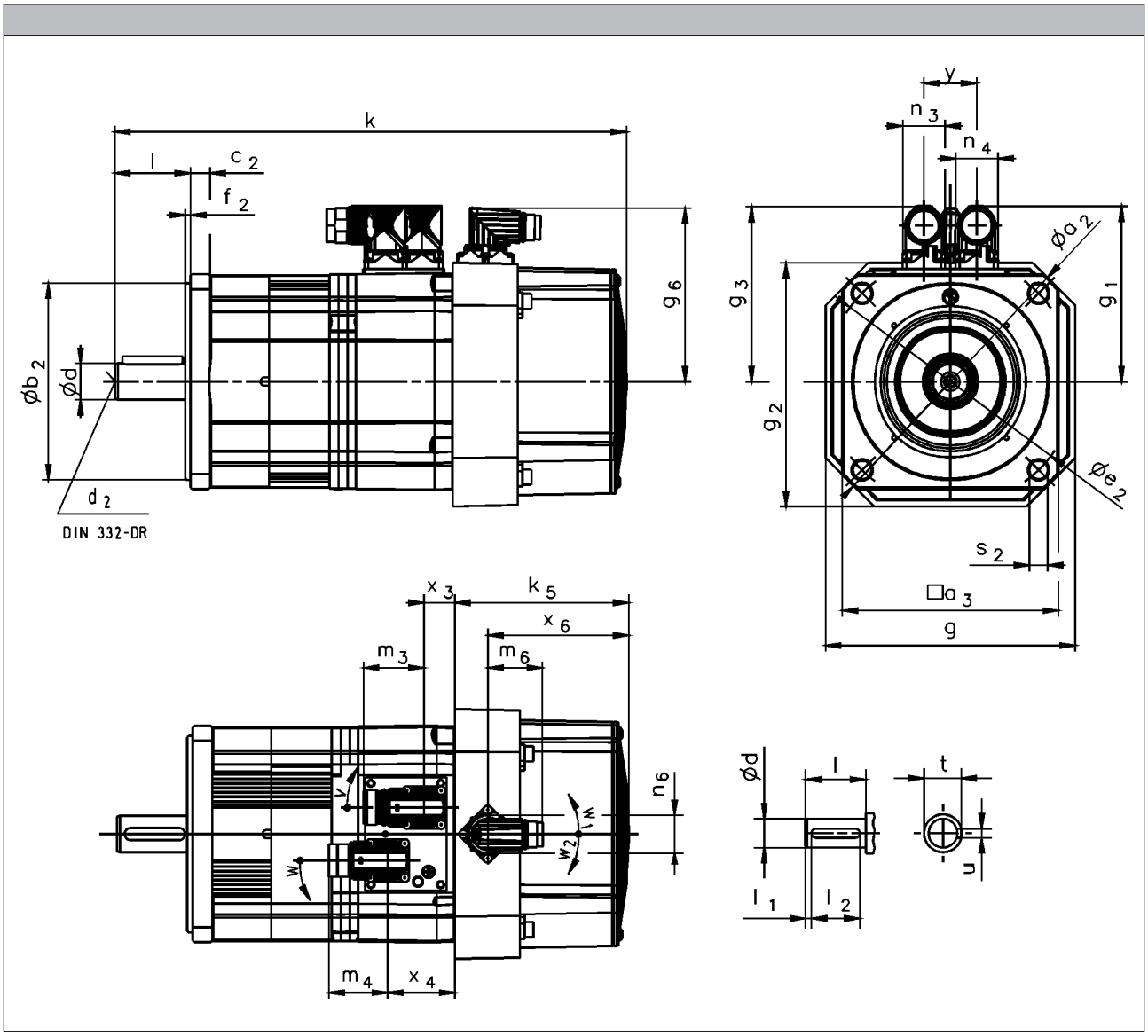

			MCS12D	MCS12H	MCS12L	MCS14D	MCS14H	MCS14L	MCS14P	MCS19F	MCS19J	MCS19P
R□0 / C40 B0	k	[mm]	301	341	381	339	379	419	459	387	427	487
R□0 / C40 P□	k	[mm]	321	361	401	368	408	448	488	421	471	531
R□0 / C40	k_5	[mm]	92			115				126		
S□□ / E□□ B0	k	[mm]	344	384	424	392	432	472	512	425	465	525
S□□ / E□□ P□	k	[mm]	364	404	444	421	461	501	541	459	509	569
S□□ / E□□	k_5	[mm]	135			169				165		
	g	[mm]	140			167				212		
	g_2	[mm]	140			163				210		

► Speed / angle sensor: R□□ / C□□ / S□□ / E□□
► Brake: B0 / P□



Dimensions, forced ventilated

	g_1	g_3	g_6	x_3	x_4	x_6	m_3	m_4	m_6	n_3	n_4	n_6	y	v	w	w_1	w_2
	[mm]	[mm]	[mm]	[mm]	[mm]	[mm]	[mm]	[mm]	[mm]	[mm]	[mm]	[mm]	[mm]	[°]	[°]	[°]	[°]
MCS12D17	105	105	107	16	40	67	40	40	37	28	28	28	35	160	160	120	130
MCS12D35																	
MCS12H14																	
MCS12H34																	
MCS12L17																	
MCS12L39																	
MCS14D14	117	117	115	20	44	93											
MCS14D30																	
MCS14H12																	
MCS14H28	146	126		24	31			75			45						
MCS14L14	117	117		20	44			40			28						
MCS14L30	146	126		24	31			75			45						
MCS14P11	117	117		20	44			40			28						
MCS14P26	146	126		24	31			75			45						
MCS19F12	142	142	142	19 46 [1]	43 70 [1]	96		40			28						
MCS19F29	171	151		24 51 [1]	31 58 [1]			75			45						
MCS19J12																	
MCS19J29																	
MCS19P12																	
MCS19P29																	

	d	d_2	l	l_1	l_2	u	t
	k6		-0.7 ... 0.3				
	[mm]	[mm]		[mm]	[mm]	[mm]	[mm]
MCS12	19	M6	40	4.0	32	6.0	21.5
MCS14	24	M8	50	5.0	40	8.0	27.0
MCS19	28	M10	60		50		31.0

	a_2	a_3	b_2	c_2	e_2	f_2	s_2
			j6				
	[mm]	[mm]	[mm]	[mm]	[mm]	[mm]	[mm]
MCS12	160	116	110	9	130	3.5	10.0
MCS14	188	143	130	13	165		12.0
MCS19	250	192	180	11	215	4.0	14.0

[1] On version with brake (P□)





Permanent magnet holding brake

The synchronous servo motor can be fitted with integral permanent magnet holding brakes.
In the case of permanent magnet brakes, the rated torque applies solely as holding torque at standstill. This is due to the nature of their design. During braking from full motor speed, e.g. in the event of emergency stops, the braking torque is significantly reduced.
As such, they may not be used as safety elements (particularly with lifting axes) without additional measures being implemented.
The brakes are activated when the supply voltage is disconnected (closed-circuit principle). When using the brakes purely as holding brakes, virtually no wear occurs on the friction surfaces.

For traversing axes, adherence to the permissible load/brake motor (J_L / J_{MB}) moment of inertia ensures that the permissible maximum switching rate of the brake will not be exceeded and at least 2,000 emergency stop functions can be performed from a speed of 3,000 rpm.
For lifting axes, the load torque resulting from the weight acts additionally. In this case the specifications for J_L / J_{MB} do not apply.

Caution:
The brakes used are not safety brakes in the sense that a reduction in torque may arise as a result of disruptive factors that cannot be influenced, e.g. oil ingress.

The ohmic voltage drop along the cable must be taken into consideration in long motor supply cables and must be compensated for by a higher voltage at the line input.

The following applies for Lenze system cables:

$$U[V] = U_B[V] + 0.08\frac{[V]}{[A]\cdot[m]}\cdot l_{Lg}[m]\cdot I_B[A]$$

If no suitable voltage (incorrect value, incorrect polarity) is applied to the brake, the brake will be applied and can be overheated and destroyed by the motor continuing to rotate.
The shortest switching times of the brakes are achieved by DC switching of the voltage. A spark suppressor is required to suppress interference and to increase the service life of the relay contacts here.



Permanent magnet holding brake



Permanent magnet holding brake

Rated data with standard braking torque

	$U_{N, DC}$ [3, 5]	M_N	M_N	M_{av}	I_N [2]	J	t_1 [1]	t_2 [1]	Q_E [4]	m	J_{MB}	J_L/J_{MB}
		20 °C	120 °C	120 °C								
	[V]	[Nm]	[Nm]	[Nm]	[A]	[kgcm²]	[ms]	[ms]	[J]	[kg]	[kgcm²]	
MCS06C	24	2.20	2.00	0.60	0.34	0.12	15.0	30.0	30.0	0.30	0.26	22.1
MCS06F											0.34	16.6
MCS06I											0.42	13.3
MCS09D		8.00	6.00	4.50	0.65	1.07	20.0	40.0	400	0.80	2.17	36.4
MCS09F											2.57	30.5
MCS09H											2.97	26.3
MCS09L											3.87	19.9
MCS12D		12.0	10.0	7.00			13.0	43.0		0.90	5.07	15.0
MCS12H											8.40	8.70
MCS12L											11.7	5.90
MCS14D		22.0	18.0	8.00	0.88	3.20	15.0	150	640	1.90	11.3	10.5
MCS14H											17.4	6.50
MCS14L											26.6	3.90
MCS14P											37.9	2.40
MCS19F		37.0	32.0	15.0	0.93	12.4	96.0	113	2350	3.10	77.4	5.20

Rated data with increased braking torque

	$U_{N, DC}$ [3, 5]	M_N	M_N	M_{av}	I_N [2]	J	t_1 [1]	t_2 [1]	Q_E [4]	m	J_{MB}	J_L/J_{MB}
		20 °C	120 °C	120 °C								
	[V]	[Nm]	[Nm]	[Nm]	[A]	[kgcm²]	[ms]	[ms]	[J]	[kg]	[kgcm²]	
MCS09D	24	12.0	10.0	7.00	0.65	1.07	20.0	40.0	400	0.80	2.17	36.4
MCS09F											2.57	30.5
MCS09H											2.97	26.3
MCS09L											3.87	19.9
MCS12D		24.0	19.0	12.0	0.71	3.13	16.0	90.0	890	1.20	7.10	24.3
MCS12H											10.4	16.3
MCS12L											13.7	12.1
MCS14D		37.0	32.0	15.0	0.93	12.4	96.0	113	2350	3.10	20.5	22.2
MCS14H											26.6	16.9
MCS14L											35.8	12.3
MCS14P											47.1	9.10
MCS19J		100	80.0	43.0	1.29	30.0	30.0	90.0	2100	4.30	135	2.20
MCS19P											190	1.20

[1] Engagement and disengagement times are valid for rated voltage (± 0 %) and protective circuit for brakes with varistor for DC switching. The times may increase without a protective circuit.
[2] The currents are the maximum values when the brake is cold (value used for dimensioning the current supply). The values for a motor at operating temperature are considerably lower.
[3] With 24V DC brake: smoothed DC voltage, ripple ≤1 %.
[4] Maximum switching energy per emergency stop at n = 3000 r/min for at least 2000 emergency stops.
[5] Voltage tolerance: -10% to +5%



Resolver

Stator-fed resolver with two stator windings offset by 90° and one rotor winding with transformer winding.

Speed/angle sensor					
	1)			RS0	RV0
Product key					
				RS0	RV03
Resolution					
Angle			[']	0.80	
Accuracy					
			[']	-10 ... 10	
Absolute positioning					
				1 revolution	
Max. speed					
	n_{max}		[r/min]	8000	
Max. input voltage					
DC	$U_{in,max}$		[V]	10.0	
Max. input frequency					
	$f_{in,max}$		[kHz]	4.00	
Ratio					
Stator / rotor		± 5 %		0.30	
Rotor impedance					
	Z_{ro}		[Ω]	51 + j90	
Stator impedance					
	Z_{so}		[Ω]	102 + j150	
Impedance					
	Z_{rs}		[Ω]	44 + j76	
Min. insulation resistance					
At DC 500 V	R		[MΩ]	10.0	
Number of pole pairs					
				1	
Max. angle error					
			[']	-10 ... 10	
Inverter assignment					
				i700 E84AVTC E94A ECS EVS93	E84AVTC E94A ECS EVS93

1) 6 - Product key > speed/angle sensor

Speed-dependent safety functions

Suitable for safety function					
				No	Yes
Max. permissible angular acceleration					
MCS06	α	[rad/s²]			56000
MCS09 ... MCS19 2)	α	[rad/s²]			19000
Functional safety					
IEC 61508					SIL3
EN 13849-1					Up to Performance Level e

2) 10 - Single encoder concepts with resolvers



Incremental encoder and SinCos absolute value encoder

Encoder type			TTL incremental	SinCos absolute value		
Speed/angle sensor						
	1)		C40	EQI	SRS	SVS
Product key						
			IK4096-5V-T	AM32-5V-E	AS1024-8V-H	AS1024-8V-K2
Encoder type						
			Single-turn	Multi-turn	Single-turn	
Pulses						
			4096	32	1024	
Output signals						
			TTL	1 Vss		
Interfaces						
				EnDat	Hiperface	
Absolute revolutions						
			0	4096	1	
Resolution						
Angle 2)		[°]	1.30	0.40		
Accuracy						
		[°]	-1 ... 1	-5 ... 5	-0.8 ... 0.8	
Min. input voltage						
DC	$U_{in,min}$	[V]	4.50	4.75	7.00	
Max. input voltage						
DC	$U_{in,max}$	[V]	5.50	5.25	12.0	
Max. speed						
	n_{max}	[r/min]	7324	12000	6000	
Max. current consumption						
	I_{max}	[A]	0.075	0.17	0.080	
Limit frequency						
	f_{max}	[kHz]	500	6.00	200	
Inverter assignment			E94P	E94A	E84AVTC E94A ECS EVS93	

1) 6 - Product key > speed/angle sensor

2) Inverter-dependent.

Speed-dependent safety functions

Suitable for safety function			No	No	No	Yes
Max. permissible angular acceleration						
MCS06	α	[rad/s²]				970000
MCS09 ... MCS19	α	[rad/s²]				240000
Functional safety						
IEC 61508						SIL2
EN 13849-1						Up to Performance Level d



Incremental encoder and SinCos absolute value encoder

Encoder type			SinCos absolute value				
Speed/angle sensor			SKM	SRM	SVM	ECN	EQN
Product key			AM128-8V-H	AM1024-8V-H	AM1024-8V-K2	AS2048-5V-E	AM2048-5V-E
Encoder type			Multi-turn			Single-turn	Multi-turn
Pulses			128	1024		2048	
Output signals			1 Vss				
Interfaces			Hiperface			EnDat	
Absolute revolutions			4096			1	4096
Resolution							
Angle		[°]	0.40				
Accuracy							
		[°]	-1.3 ... 1.3	-0.8 ... 0.8		-0.6 ... 0.6	
Min. input voltage							
DC	$U_{in,min}$	[V]	7.00			4.75	
Max. input voltage							
DC	$U_{in,max}$	[V]	12.0			5.25	
Max. speed							
	n_{max}	[r/min]	9000	6000		12000	
Max. current consumption							
	I_{max}	[A]	0.060	0.080		0.15	0.25
Limit frequency							
	f_{max}	[kHz]	200				
Inverter assignment			i700 E84AVTC E94A ECS EVS93	E84AVTC E94A ECS EVS93		E94A	

[1] Inverter-dependent.

Speed-dependent safety functions

Suitable for safety function			No	No	Yes	No	No
Max. permissible angular acceleration							
MCS06	α	[rad/s²]			970000		
MCS09 ... MCS19	α	[rad/s²]			240000		
Functional safety							
IEC 61508					SIL2		
EN 13849-1					Up to Performance Level d		



Blower

Rated data for 50 Hz

		Degree of protection	Number of phases					
				U_{min}	U_{max}	$U_{N, AC}$	P_N	I_N
				[V]	[V]	[V]	[kW]	[A]
MCS12	F10	IP54	1	210	240	230	0.019	0.12
	F50			104	122	115	0.018	0.22
MCS14	F10			210	240	230	0.040	0.25
	F50			104	122	115		0.53
MCS19	F10			210	240	230	0.060	0.26
	F50			104	122	115	0.047	0.45

Rated data for 60 Hz

		Degree of protection	Number of phases					
				U_{min}	U_{max}	$U_{N, AC}$	P_N	I_N
				[V]	[V]	[V]	[kW]	[A]
MCS12	F10	IP54	1	210	240	230	0.019	0.12
	F50			104	122	115	0.018	0.22
MCS14	F10			210	240	230	0.040	0.25
	F50			104	122	115		0.53
MCS19	F10			210	240	230	0.060	0.26
	F50			104	122	115	0.047	0.45



Temperature monitoring

The thermal sensors used in the MCS motors continuously monitor the motor temperature. The temperature signal is transmitted over the system cable of the feedback system to the servo controller. Because of the different physical conditions, there are two temperature monitoring mechanisms on the MCS motors (there is no complete motor protection in either case).

MCS06
In case of this motor, the winding temperature of one winding phase is monitored with a KTY 83-110 type thermal sensor.

Variation of resistance

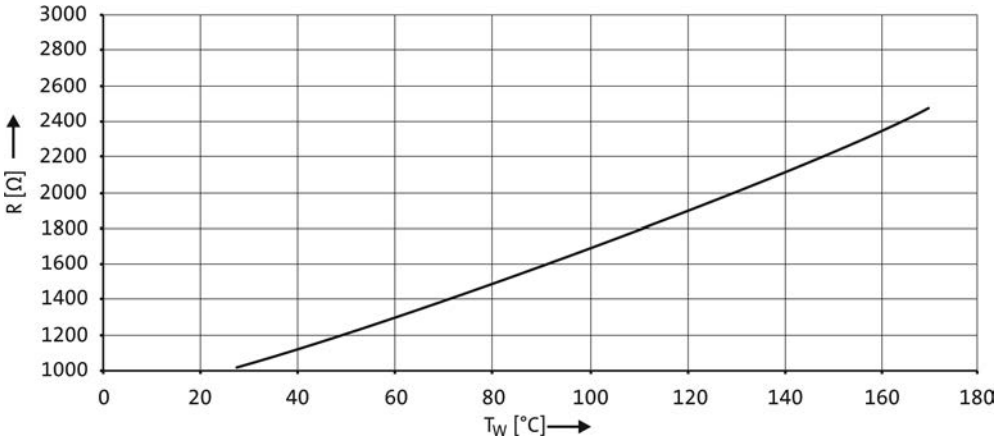

MCS09 ... 19
These motors are monitored by three thermal sensors (1x KTY 83-110 + 2x PTC 150 °C) connected in series. This means that the temperature of the motor is determined with great accuracy in the permitted operating range and at the same time the overtemperature response configured in the controller is executed in one of the winding phases.

Variation of resistance

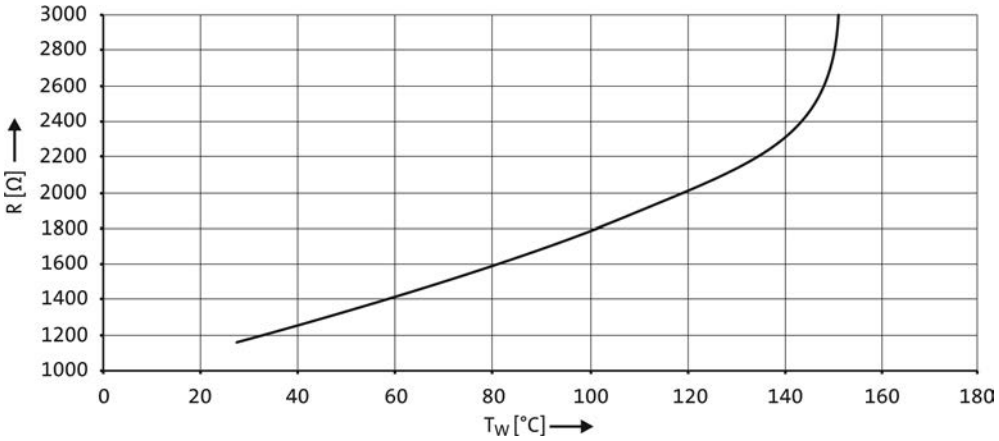

► If the thermal sensor is supplied with a measurement current of 1 mA, the above relationship between the temperature and the resistance applies.



Terminal box

If a servo motor is to be connected to an existing cable or plug connectors are not to be used for other reasons, the connection can also be made via a terminal box.

The terminals are designed as tension spring terminals to ensure here the long-term vibration resistance of the cable contacts with adequate contact pressure required.

The terminal boxes have generously dimensioned space for the customer's own wiring and large surface shield connection areas to ensure a secure EMC-compliant connection. The cable outlet may be to the left or to the right, depending on requirements.

It is not possible to attach a terminal box to the MCS06 or to models with the blower.

Connections

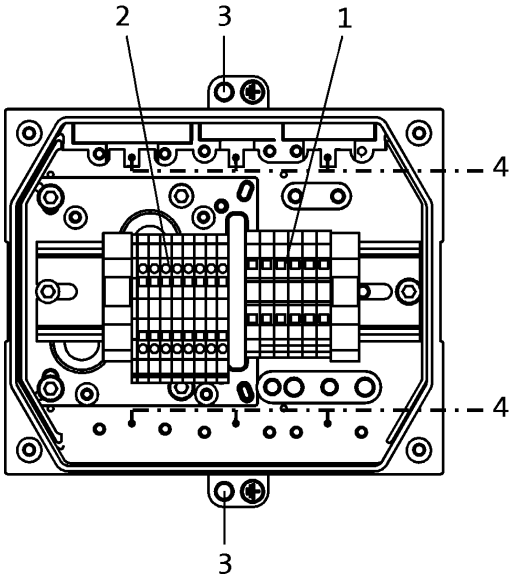



1: Power connection (terminals loadable up to 65 A) + brake connection.

2: Angle/speed sensor connection + thermal sensor connection.

3: PE connection.

4: Large area shield contact.

5: Openings for 2x M32, 2x M25, 2x M20 fittings. The openings are plugged and can be opened up as required by the customer.

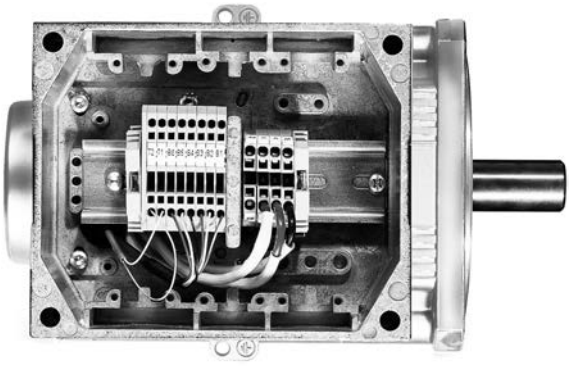



Terminal box

Dimensions

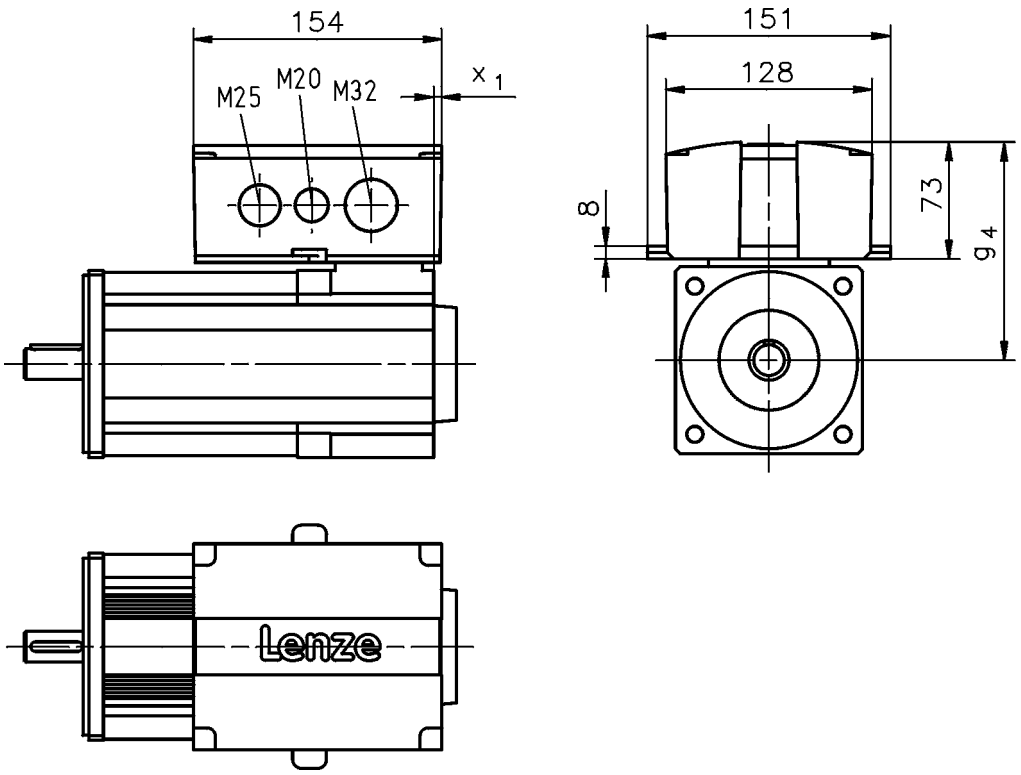

	g_4	x_1
	[mm]	[mm]
MCS09	121	8
MCS12	136	5
MCS14	147	3
MCS19	172	



ICN connector

An ICN connector is used as standard for the electrical connection to the servo motors.

A connector is used for the connection of motor and brake.
The connections to the feedback system/temperature monitoring and the blower each employ a separate connector.

The connectors can be rotated through 270° and are fitted with a bayonet catch for SpeedTec connectors. As the connector fixing is also compatible with conventional union nuts. Existing mating connectors can therefore still be used without difficulty.

Connection for power and brake

► MCS06 to 12

Pin assignment			
Contact	Designation	Meaning	
1	BD1	Holding brake +	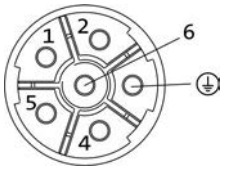
2	BD2	Holding brake -	
PE	PE	PE conductor	
4	U	Phase U power	
5	V	Phase V power	
6	W	Phase W power	

► MCS14 to 19

Pin assignment			
Contact	Designation	Meaning	
1		Not assigned	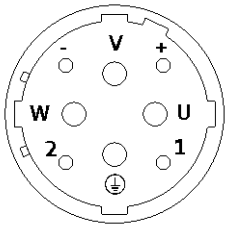
2			
+	BD1	Holding brake +	
-	BD2	Holding brake -	
PE	PE	PE conductor	
U	U	Phase U power	
V	V	Phase V power	
W	W	Phase W power	



ICN connector

Feedback connection

► Resolver

Pin assignment			
Contact	Designation	Meaning	
1	+Ref	Transformer windings	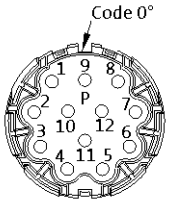
2	-Ref		
3	+VCC ETS	Supply: Electronic nameplate	
4	+COS	Cosine stator windings	
5	-COS		
6	+SIN	Sine stator windings	
7	-SIN		
8		Not assigned	
9			
10			
11	+KTY	KTY temperature sensor	
12	-KTY		

► Hiperface incremental encoder and SinCos absolute value encoder

Pin assignment			
Contact	Designation	Meaning	
1	B	Track B/+SIN	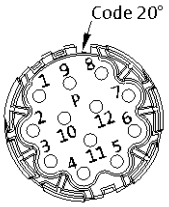
2	A^-	Track A inverse/-COS	
3	A	Track A/+COS	
4	$+U_B$	Supply +	
5	GND	Mass	
6	Z^-	Zero track inverse/-RS485	
7	Z	Zero track/+RS485	
8		Not assigned	
9	B^-	Track B inverse/-SIN	
10		Not assigned	
11	+KTY	KTY temperature sensor	
12	-KTY		



ICN connector

Feedback connection

► SinCos absolute value encoder with EnDat interface

Pin assignment			
Contact	Designation	Meaning	
1	U_P sensor	Supply: UP sensor	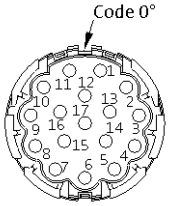
2		Not assigned	
3			
4	0 V sensor	Supply: 0 V sensor	
5	+KTY	KTY temperature sensor	
6	-KTY		
7	$+U_B$	Supply +	
8	Cycle	EnDat interface cycle	
9	Cycle$^-$	EnDat interface inverse cycle	
10	GND	Mass	
11	Shield	Encoder housing screen	
12	B	Track B	
13	B$^-$	Track B inverse/-SIN	
14	Data	EnDat interface data	
15	A	Track A	
16	A$^-$	Track A inverse	
17	Data$^-$	EnDat interface inverse data	

Blower connection

Pin assignment			
Contact	Designation	Meaning	
PE	PE	PE conductor	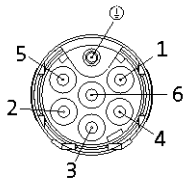
1	U1	Fan	
2	U2		
3		Not assigned	
4			
5			
6			





13449913

Lenze SE
Hans-Lenze-Straße 1
D-31855 Aerzen
Phone: +49 (0)5154 82-0
Telefax: +49 (0)5154 82 28 00

www.Lenze.com