L-force catalogue

Automation systems
Drive solutions

Controls
Inverters
Motors
Gearboxes
Engineering Tools

Motors: MH three-phase AC motors, MD three-phase AC motors

Gearboxes: g500-H helical gearbox, g500-S shaft-mounted helical gearbox, g500-B bevel gearbox

Lenze
As easy as that.

Contents of the L-force catalogue

About Lenze		Lenze makes many things easy for you.	
		A matter of principle: the right products for every application.	
		L-force product portfolio	
Automation systems		Controller-based Automation	1.1
		Drive-based automation	1.2
Drive solutions		HighLine tasks	2.1
		StateLine tasks	2.2
		BaseLine tasks	2.3
Controls	Cabinet Controller	Controller 3200 C	3.1
		Controller c300	3.2
	Panel Controller	Controller p500	3.3
		Controller p300	3.4
	'	I/O system 1000	3.5
		Monitor Panel	3.6
Inverters	Decentralised	Inverter Drives 8400 protec	4.1
		Inverter Drives 8400 motec	4.2
	Cabinet	Servo Drives 9400 HighLine	4.4
		Inverter Drives 8400 TopLine	4.5
		Servo Inverters i700	4.6
		Inverter Drives 8400 HighLine	4.7
		Inverter Drives 8400 StateLine	4.8
		Inverter Drives 8400 BaseLine	4.10
Motors	Servo motors	MCS synchronous servo motors	5.1
		MD□KS synchronous servo motors	5.2
		MQA asynchronous servo motors	5.3
		MCA asynchronous servo motors	5.4
	Three-phase AC motors	MF three-phase AC motors	5.5
		MH three-phase AC motors	5.6
		MD three-phase AC motors	5.7
		m300 Lenze Smart Motor	5.8
		MD/MH basic three-phase AC motors	5.9
Gearboxes	Axial gearbox	g700-P planetary gearbox	6.1
		MPR/MPG planetary gearboxes	6.2
		g500-H helical gearbox	6.3
		GST helical gearboxes	6.4
		g500-S shaft-mounted helical gearbox	6.5
		GFL shaft-mounted helical gearboxes	6.6
	Right-angle gearbox	g500-B bevel gearbox	6.7
		GKR bevel gearboxes	6.8
		GKS helical-bevel gearboxes	6.9
		GSS helical-worm gearboxes	6.10
	Motor data	Assignment see above	6.11
Engineering Tools		Navigator	7.1
		Drive Solution Designer	7.2
		Drive Solution Catalogue	7.3
		Engineer	7.4
		PLC Designer	7.5
		VisiWinNET®	7.6
		EASY Starter	7.7

Selected portfolio

Additional portfolio

Lenze makes many things easy for you.

With our motivated and committed approach, we work together with you to create the best possible solution and set your ideas in motion - whether you are looking to optimise an existing machine or develop a new one. We always strive to make things easy and seek perfection therein. This is anchored in our thinking, in our services and in every detail of our products. It's as easy as that!

1

Developing ideas

Are you looking to build the best machine possible and already have some initial ideas? Then get these down on paper together with us, starting with small innovative details and stretching all the way to completely new machines. Working together, we will develop an intelligent and sustainable concept that is perfectly aligned with your specific requirements.

2

Drafting concepts

We see welcome challenges in your machine tasks, supporting you with our comprehensive expertise and providing valuable impetus for your innovations. We take a holistic view of the individual motion and control functions here and draw up consistent, end-to-end drive and automation solutions for you - keeping everything as easy as possible and as extensive as necessary.

3

Implementing solutions

Our easy formula for satisfied customers is to establish an active partnership with fast decision-making processes and an individually tailored offer. We have been using this simple principle to meet the ever more specialised customer requirements in the field of mechanical engineering for many years.

4

Manufacturing machines

Functional diversity in perfect harmony: as one of the few full-range providers in the market, we can provide you with precisely those products that you actually need for any machine task – no more and no less. Our L-force product portfolio, a consistent platform for implementing drive and automation tasks, is invaluable in this regard.

5

Ensuring productivity

Productivity, reliability and new performance peaks on a daily basis – these are our key success factors for your machine. After delivery, we offer you cleverly devised service concepts to ensure continued safe operation. The primary focus here is on technical support, based on the excellent application expertise of our highly-skilled and knowledgeable after-sales team.

A matter of principle: the right products for every application.

Lenze's extensive L-force product portfolio follows a very simple principle. The functions of our finely scaled products are assigned to the three lines Base-Line, State-Line or High-Line.

But what does this mean for you? It allows you to quickly recognise which products represent the best solution for your own specific requirements.

Powerful products with a major impact:
- Easy handling
- High quality and durability
- Reliable technologies in tune with the latest developments

Lenze products undergo the most stringent testing in our own laboratory. This allows us to ensure that you will receive consistently high quality and a long service life. In addition to this, five logistics centres ensure that the Lenze products you select are available for quick delivery anywhere across the globe. It's as easy as that!

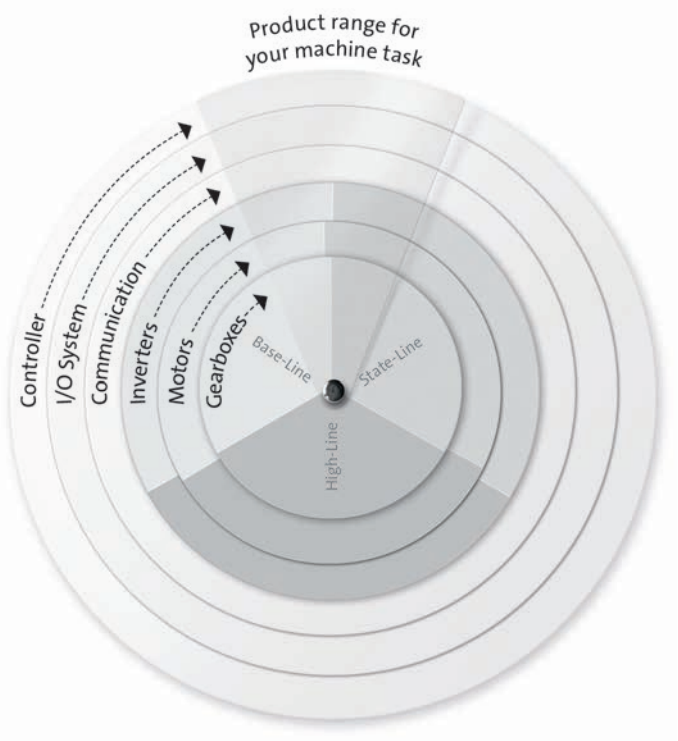

L-force product portfolio

Controls

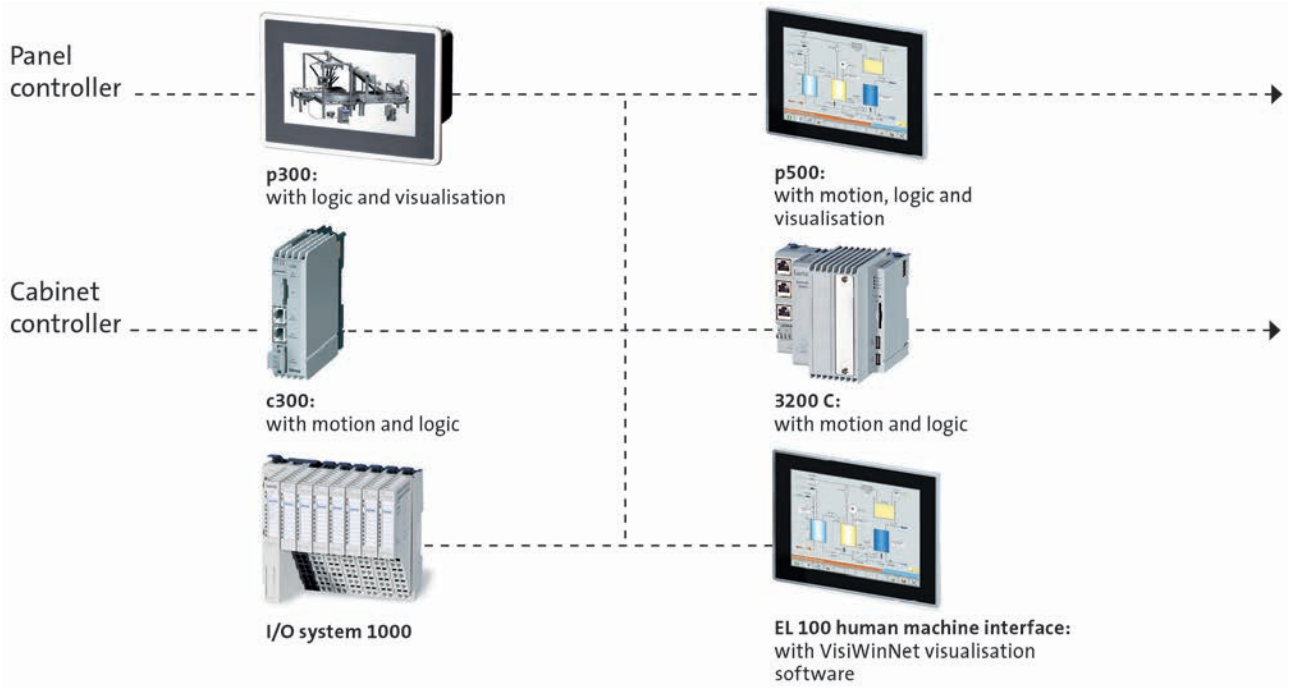

Engineering Tools

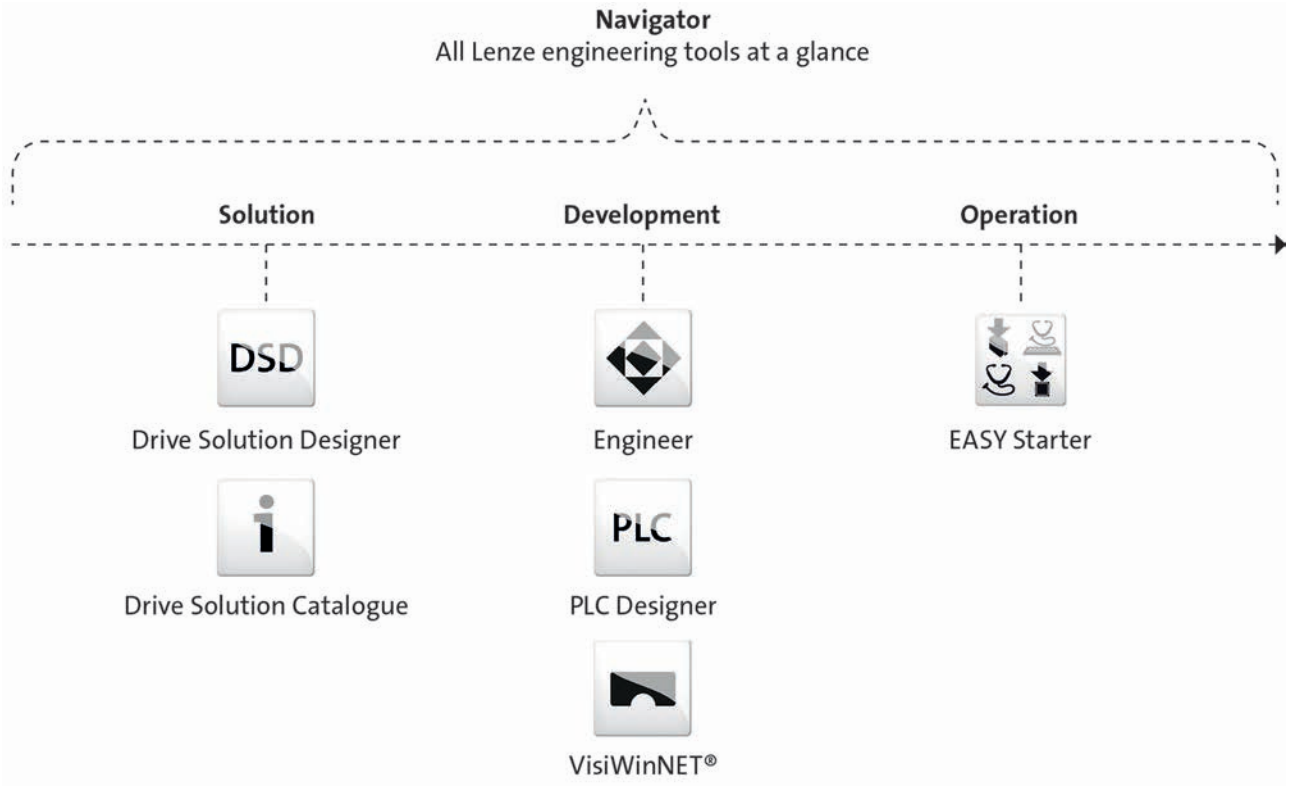

L-force product portfolio

Inverters

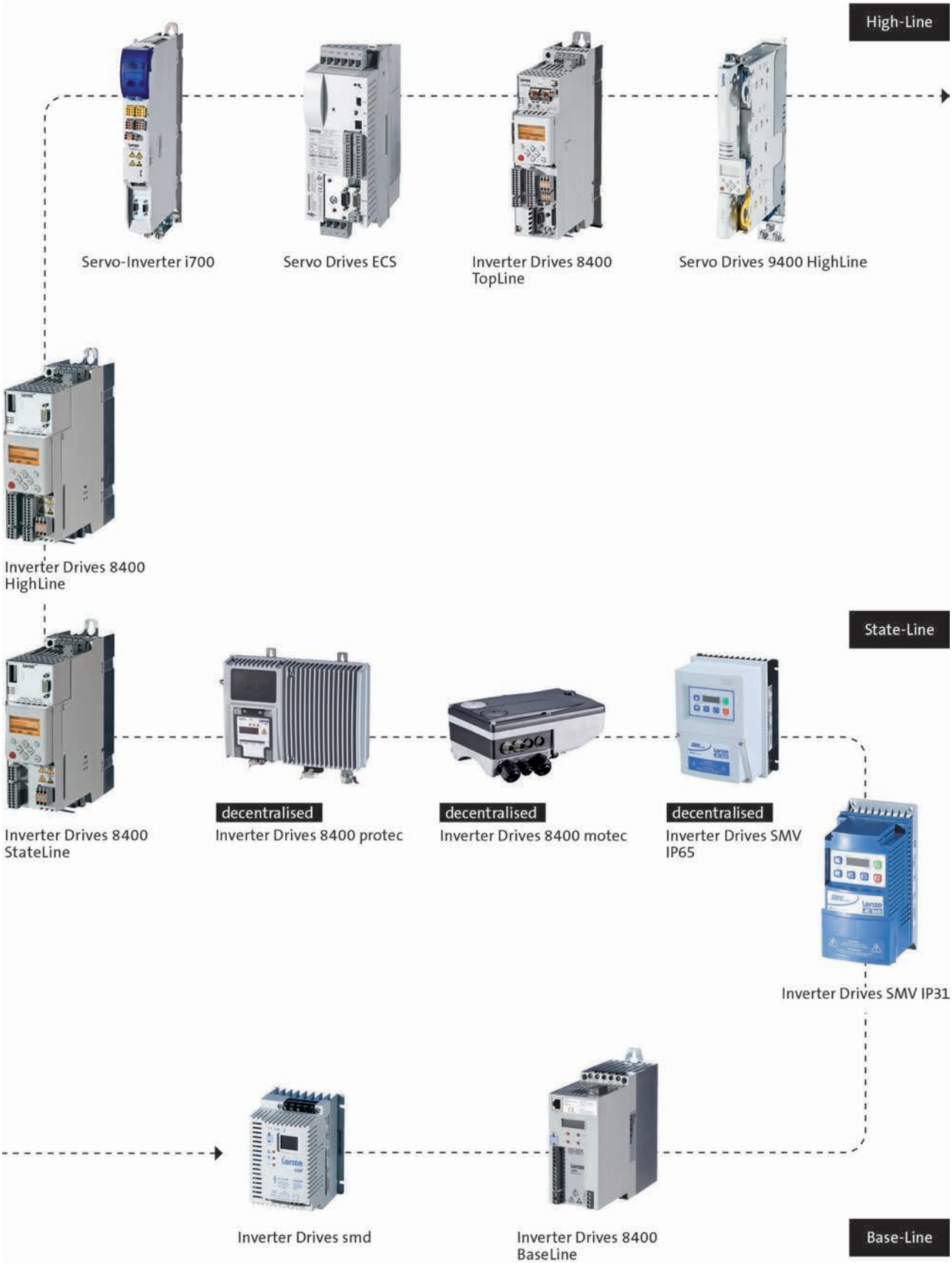

L-force product portfolio

Motors

High-Line

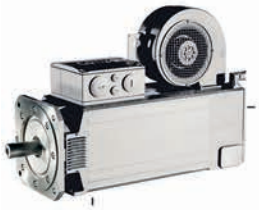

MQA asynchronous servo motors



SDSGS synchronous servo motors



MDXKS synchronous servo motors



Synchronous servo motors MCS



Asynchronous servo motors MCA



Asynchronous servo motors SDSGA

State-Line



MF three-phase AC motors



MH three-phase AC motors



MD three-phase AC motors



Basic MD/MH three-phase AC motors

Base-Line

L-force product portfolio

Gearboxes

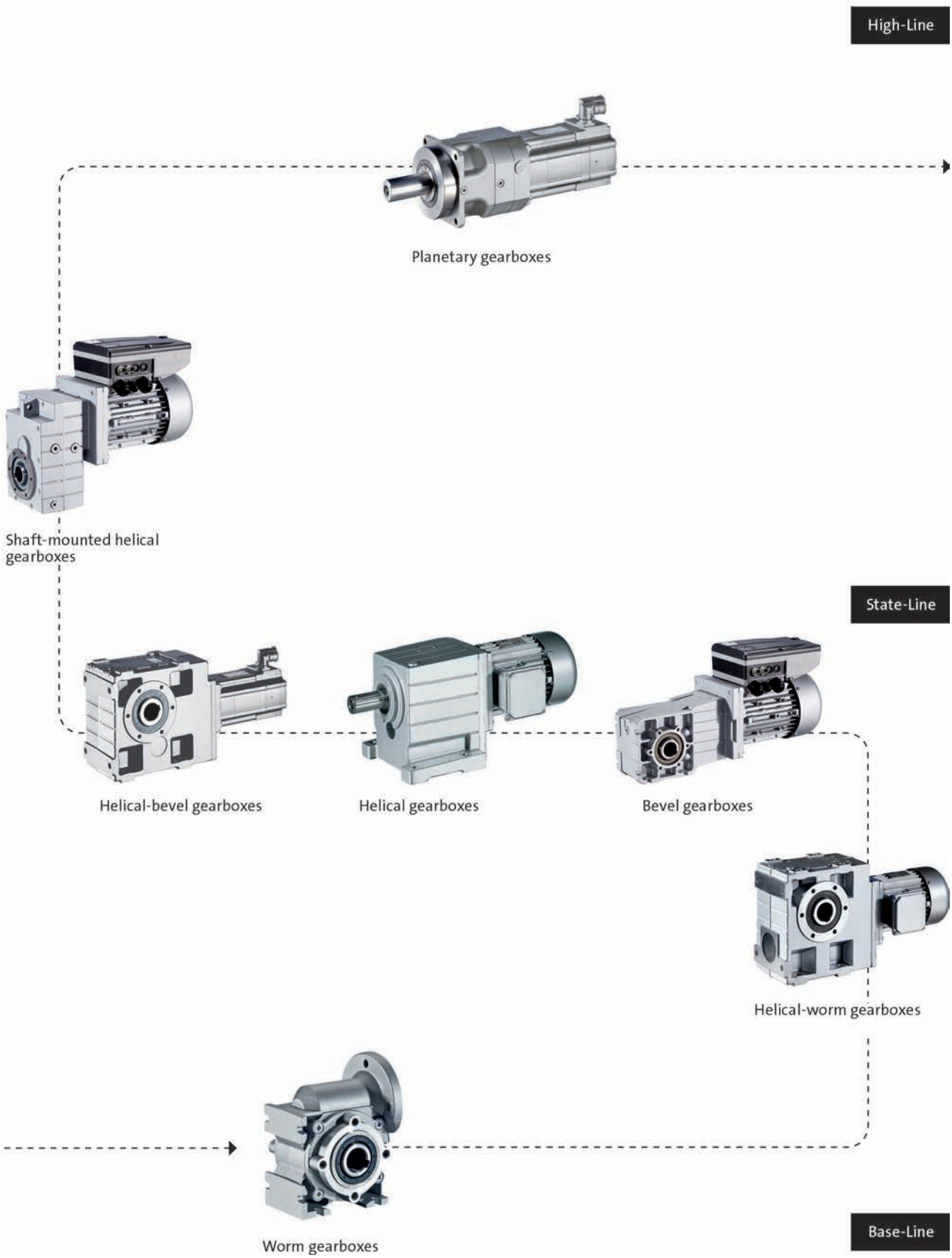

g500-H helical geared motors

0.06 to 0.55 kW
0.75 to 7.5 kW (efficiency class IE2)

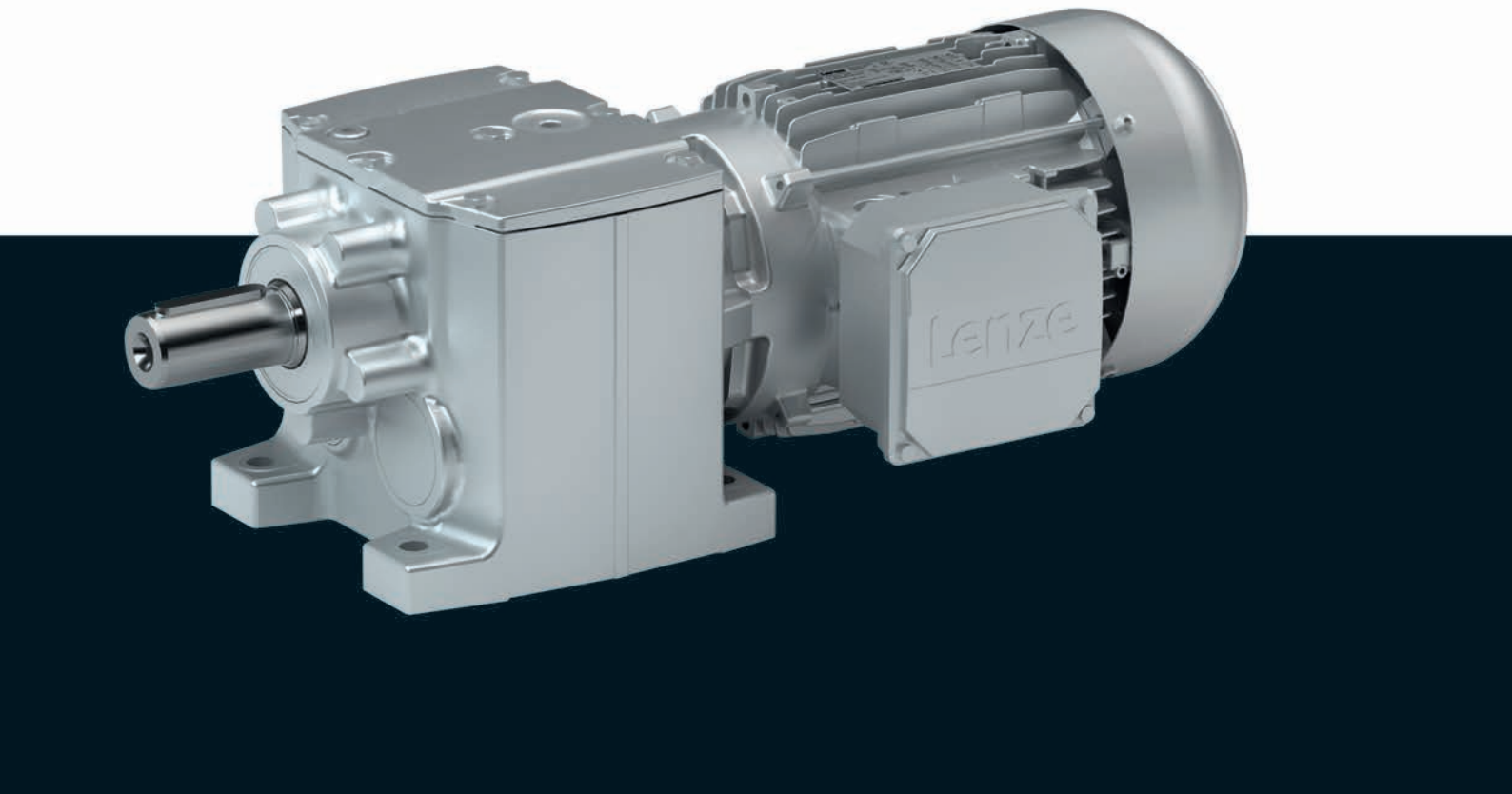

g500-H helical geared motors

Contents



General information	List of abbreviations	6.3 - 5
	Product information	6.3 - 6
	Equipment	6.3 - 7
	The gearbox kit	6.3 - 8
	Dimensioning	6.3 - 14
Technical data	Selection tables, notes	6.3 - 19
	Selection tables, 4-pole motors	6.3 - 21
	Selection tables, 2-pole motors	6.3 - 49
	Selection tables, 6-pole motors	6.3 - 54
	Dimensions, notes	6.3 - 63
	Dimensions, 4-pole motors	6.3 - 64
	Dimensions, 2-pole motors	6.3 - 85
	Dimensions, 6-pole motors	6.3 - 100
	Weights, 4-pole motors	6.3 - 115
	Weights, 2-pole motors	6.3 - 115
	Weights, 6-pole motors	6.3 - 116
	Surface and corrosion protection	6.3 - 117

Contents





List of abbreviations

c		Load capacity
i		Ratio
m	[kg]	Mass
M_2	[Nm]	Output torque
M_{22}	[Nm]	Output torque
$M_{a_,1}$	[Nm]	Starting torque
$M_{a_,2}$	[Nm]	Starting torque
n_2	[r/min]	Output speed
n_{21}	[r/min]	Output speed
n_{22}	[r/min]	Output speed

CCC	China Compulsory Certificate
CE	Communauté Européenne
CSA	Canadian Standards Association
cURus	Combined certification marks of UL for the USA and Canada
DIN	Deutsches Institut für Normung e.V.
EMC	Electromagnetic compatibility
EN	European standard
GOST	Certificate for Russian Federation
IEC	International Electrotechnical Commission
IM	International Mounting Code
IP	International Protection Code
NEMA	National Electrical Manufacturers Association
UL	Underwriters Laboratory Listed Product
UR	Underwriters Laboratory Recognized Product
VDE	Verband deutscher Elektrotechniker (Association of German Electrical Engineers)



Product information

In combination with three-phase AC motors, our helical gearboxes form a compact and powerful drive unit. Numerous options at the input and output end provide for the drive to be exactly adapted to your application.

The robust helical gearboxes feature high permissible radial forces, closely stepped ratios and a low backlash. They are available in 2-pole and 3-pole design with a torque up to 450 Nm and a ratio of up to i= 370.

Versions

- Fine-scaling of size / torque provides for an optimum machine adaptation
- Standardised shaft and flange dimensions for an easy machine integration
- High efficiency
- With three-phase AC motors in the power range 0.06 ... 0.55 kW
  With IE2 three-phase AC motors in the power range 0.75 ... 7.5 kW

Inverters for motor-proximity installation

The Drive Package with decentralised Inverter Drives 8400 motec covers a power range up to 7.5 kW.

The product name

Gearbox type	Product range		Design	Rated torque [Nm]	Product
Helical gearbox	g500	-	H	45	g500-H45
				100	g500-H100
				140	g500-H140
				210	g500-H210
				320	g500-H320
				450	g500-H450



Equipment

Overview

The equipment includes all the options available as standard and all the built-on accessories of the product.



The gearbox kit

Geared motor

Product	g500-H45	g500-H100	g500-H140	g500-H210	g500-H320	g500-H450
Motor type						
Efficiency class IE1						
Efficiency class IE2	MH□MA AC motor					
4-pole motor						
0.06 - 0.09 kW	063					
0.12 - 0.25 kW	063					
0.37 - 0.55 kW	071					
0.75 kW		080				
1.1 - 1.5 kW		090				
2.2 - 3.0 kW				100		
4.0 kW					112	
5.5 - 7.5 kW						132
2-pole motor						
0.18 - 0.25 kW		063				
0.37 - 0.55 kW		071				
6-pole motor						
0.18 - 0.25 kW		071				
0.37 - 0.55 kW		080				
Technical data						
Rated power	See selection table					
Mains voltage	230/400 V ; 230 V; 460 V					
Mains frequency	50 Hz; 60 Hz; 60 Hz					
Output torque	See selection table					
Output speed	See selection table					
Ratio	See selection table					
Load capacity	See selection table					
Mounting position						
Standard	A/B/C/D/E/F					
Combined	ABCDEF	AEF				
Colour						
	Not coated Primed Paint in various corrosion-protection designs in accordance with RAL colours					
Surface and corrosion protection						
	Without OKS(uncoated) OKS-G (primed) OKS-S (small) OKS-M (medium) OKS-L (large)					



The gearbox kit

Mounting positions

► Mounting position (A to F) and position of system blocks (1 to 6)

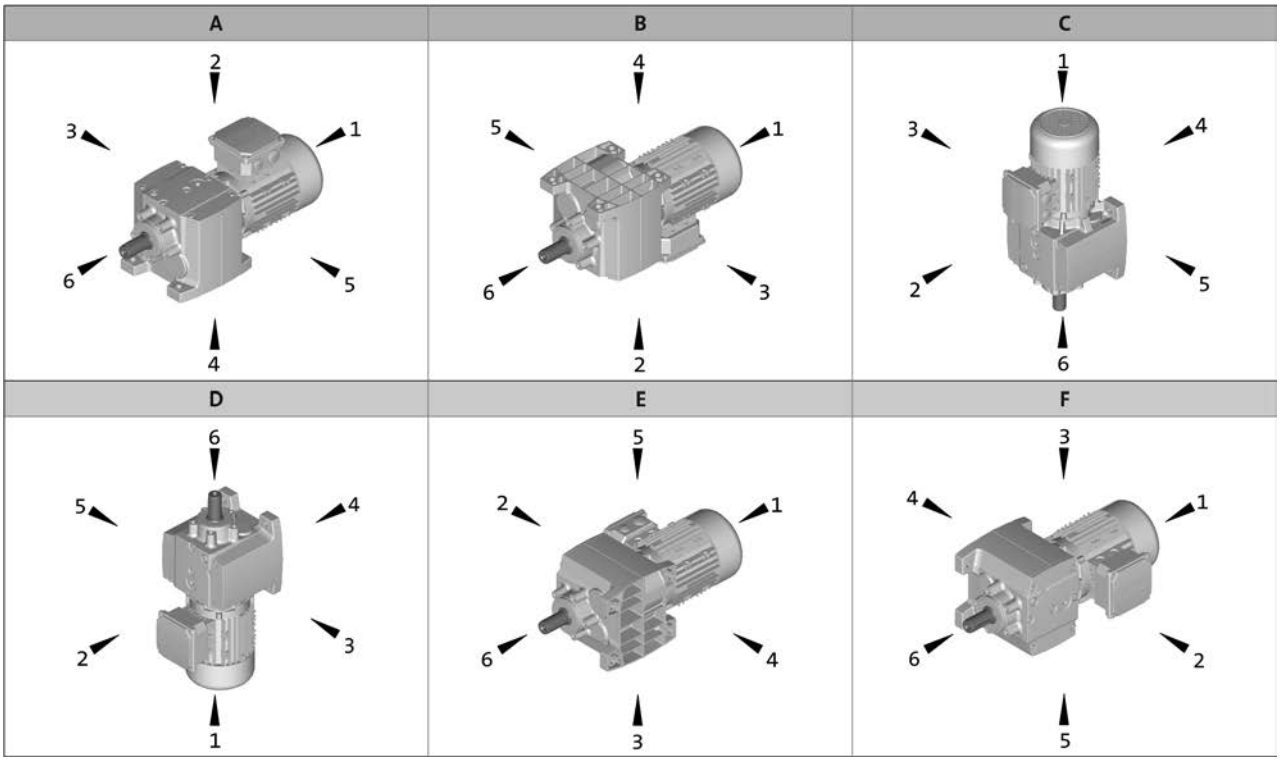

Terminal box / motec: 2, 3, 4, 5



The gearbox kit

Motor details

Product	MD□MA□□				MH□MA□□				
	063-02 063-22 063-11 063-12 063-31 063-32 063-42	071-11 071-12 071-13 071-31 071-32 071-33	071-42	080-13 080-33	080-32	090-12	100-12 100-32	112-22	132-12 132-22
Connection type	Terminal box ICN connector HAN-10E connector HAN-Modular connector								
Spring-applied brake									
Rated torque [Nm]	4		4 8	8 16			16 32	32 60	60 80
Brake voltage [V]	DC 24/180/205 AC 230/400/460								
Brake design	Standard LongLife								
	Standard Overexcited Cold Brake								
Options	Manual release lever Low noise With cover ring								
Feedback	With absolute value encoder With incremental encoder With resolver								
Cooling	Without blower/integral fan Blower Integral fan with increased mass								
Temperature monitoring	TKO thermal contact KTY83-110 thermal detector KTY84-130 thermal detector PTC thermistor								
Approval	cURus CCC								
Enclosure	IP55								
Further options	Protection cover 2nd shaft end Handwheel								

► Further information and installation feasibilities can be found in the Motors chapter.

The gearbox kit

Motor details

Connection type


Terminal box


ICN connector


HAN connector

Cooling: integral fan


Without built-on accessories

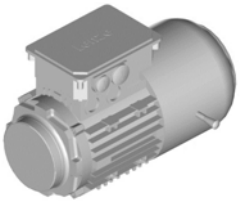
With spring-applied brake
With or without manual release lever

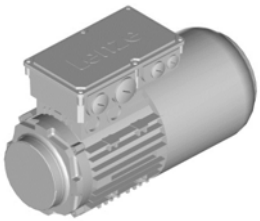
With feedback
With feedback and spring-applied brake

Cooling: blower

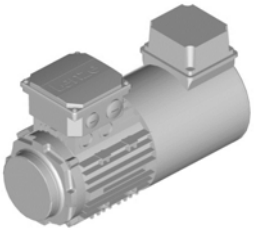
Without built-on accessories

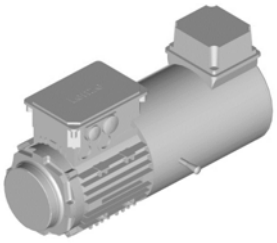
With spring-applied brake
With or without manual release lever

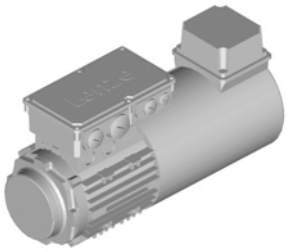
With feedback
With feedback and spring-applied brake

Further options


With 2nd shaft end
Only integral fan

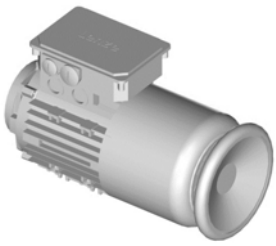
With handwheel
Only integral fan

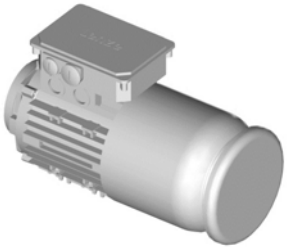
With protection cover



The gearbox kit

Gearbox details

Product	g500-H45	g500-H100	g500-H140	g500-H210	g500-H320	g500-H450
Driven shaft						
Solid shaft without keyway [mm]		20x40	25x50		30x60	35x70
Solid shaft with featherkey [mm]	14x28 20x40	20x40	25x50		30x60	30x60 35x70
Design	Standard stainless steel					
Gasket	Standard FPM (Viton)					
Bearing	Standard	Standard Reinforced				
Fitting grease	Not enclosed Enclosed					
Housing						
Housing version	With foot Without foot with centering	With foot With foot and centering Without foot with centering				
Output flange						
flange diameter [mm]	120/140/160			120/140/160/200	160/200	160/200/250
Lubricant						
Type	CLP 460 [1)] CLP HC 320 CLP HC 220 CLP HC 220 USDA H1					
Oil-level inspection	Without inspection With inspection					
Breather element	Without				Standard mounting position: Mounted Combined mounting position: loosely enclosed	
Backlash						
Backlash	Standard					

[1)] Not suitable for geared servo motors.

► Further information and installation feasibilities can be found in the Gearboxes chapter.

The gearbox kit

Gearbox details

Solid shaft		
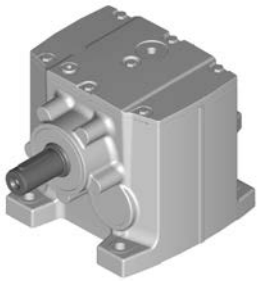 Foot mounting	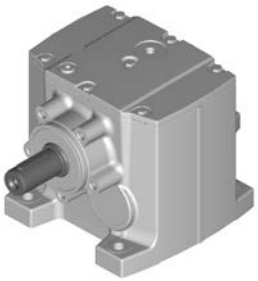 Foot mounting With centering	 Foot mounting Flange with through holes

Solid shaft	
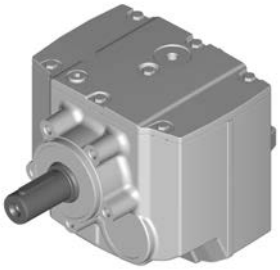 With centering	 Flange with through holes



Dimensioning

General information about the data provided in this catalogue

The powers, torques and speeds specified in this catalogue are rounded values and are valid under the following conditions:

- Operating time/day = 8 h (100% OT)
- Duty class I for up to 10 switching operations/h
- Mounting positions and designs in this catalogue
- Standard lubricant
- T_{amb} = 20 °C for gearboxes,
  T_{amb} = 40 °C for motors (in accordance with EN 60034)
- Site altitude < = 1000 m amsl
- The selection tables provide the permissible mechanical powers and torques. For notes on the thermal power limit, see chapter drive dimensioning.
- The rated power specified for motors and geared motors applies to operating mode S1 (in accordance with EN 60034).

Under different operating conditions, the values obtained may vary from those listed here.
In the case of extreme operating conditions, please consult your Lenze sales office.



Dimensioning

Thermal power limit

The thermal power limit, defined by the heat balance, limits the permissible gearbox continuous power. It may be less than the mechanical power ratings listed in the selection tables.

The thermal power limit is affected by:
- the churning losses in the lubricant. These are determined by the mounting position and the circumferential speed of the gears;
- the load and the speed
- the ambient conditions: temperature, air circulation, input or dissipation via shafts and the foundation

If the following input speeds n_1 are exceeded, please contact Lenze:

Motor frame size	Mounting position A, B, E, F	Mounting position C, D
063 ... 100	4000 r/min	3000 r/min
112 ... 132	3000 r/min	1500 r/min

► For a short period of time up to 5 min, 30 % higher speeds are permissible

Possible ways of extending the application area

- synthetic lubricant (option)
- shaft sealing rings made from FP material/Viton (option)
- reduction in lubricant quantity
- cooling of the geared motor by means of air convection on the machine/system



Dimensioning

Load capacity and application factor

Load capacity c of gearbox
Rated value for the load capacity of Lenze geared motors.
- c is the ratio of the permissible rated torque of the gearbox to the rated torque supplied by the drive component (e.g. the built-in Lenze motor).
- The value of c must always be greater than the value of the application factor k calculated for the application.

Application factor k (according to DIN 3990)
Takes into account the influence of temporally variable loads which are actually present during the anticipated operating time of gearboxes and geared motors.
k is determined by:
- the type of load
- the load intensity
- temporal influences

Duty class	Load type
I	Smooth operation, small or light jolts
II	Uneven operation, average jolts
III	Uneven operation, severe jolts and/or alternating load

Application factor k

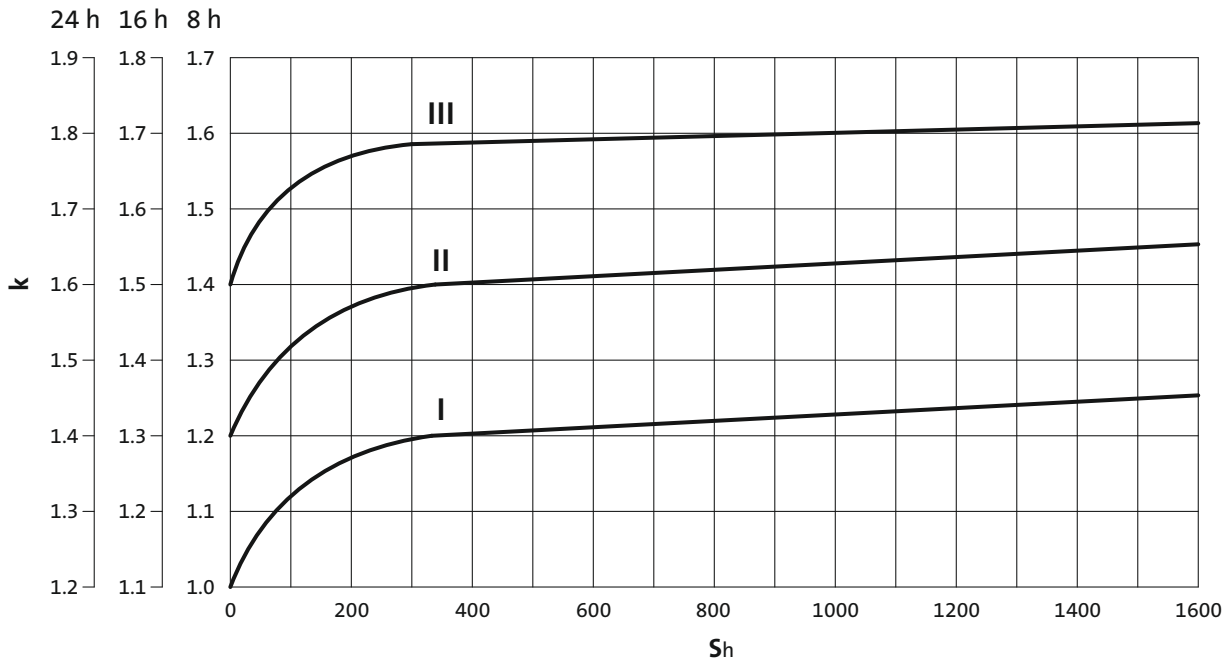

► S_h= switchings/h



Dimensioning

Torque derating at low motor frequencies

Motor size-dependent torque reduction, taking into account the thermal response during operation on the inverter.

Torque characteristics

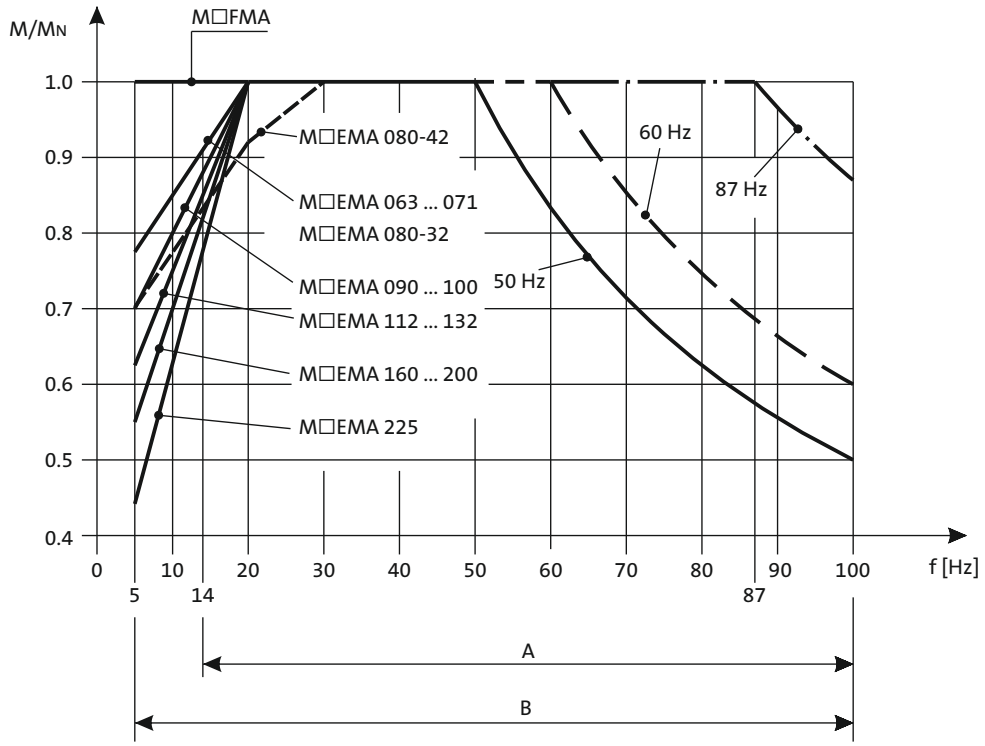

A = Operation with integral fan and brake
B = Operation with integral fan and brake control "Holding current reduction"

You can use the Drive Solution Designer for precise drive dimensioning.

The Drive Solution Designer helps you to carry out a fast and high-quality drive dimensioning.
The software includes well-founded and proven knowledge on drive applications and electro-mechanical drive components.

Please contact your Lenze sales office.



Dimensioning

Weights

The values given in the tables consider the following gearbox/motor combination:
- Gearbox with solid shaft without foot and flange including lubricant amount for mounting position A
- Motor without built-on accessories (with integral fan)

For versions deviating from this, additional weights have to be considered.

The respective values can be found for:
- Geared motors without built-on accessories
  > Chapter: Geared motors/Technical data
- Gearbox options
  > Chapter: Gearboxes/Technical data and accessories
- Motor options: Spring-applied brake, feedback, 2. Shaft end, handwheel and increased centrifugal mass
  > Chapter: Motors/Accessories

Moments of inertia

The given moments of inertia of the gearbox refer to the drive shaft. The influence of the ratio (i^2) has been considered in the data.

When the total moment of inertia of the geared motor is calculated, the values of the gearbox, motor and accessories have to be added.

The respective values can be found for:
- Gearboxes
  > Chapter: Gearbox/Technical data
- Motors without built-on accessories
  > Chapter: Motors/Technical data/Rated data
- Motor options: Spring-applied brake, feedback, 2. Shaft end, handwheel and increased centrifugal mass
  > Chapter: Motors/Accessories



Selection tables, notes

Notes on the selection tables with 4-pole motors

The selection tables show the available combinations of gearbox type, number of stages, ratio and motor. They are used only to provide basic orientation.
The following legend indicates the structure of the selection tables.

Rated power Prated of the drive motor depending on the rated frequency

50 Hz: P_N = 0.06 kW
87 Hz: P_N = 0.11 kW

2-stufige Getriebe ← **Number of the gear stage of the gearbox**

Torque diagram

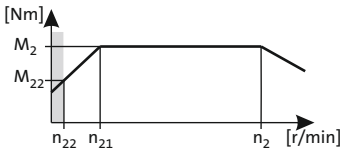

Mains operation 400 V, 50 Hz			Inverter operation 5 Hz -		- 20 Hz		- 50 Hz (1:10)			- 87 Hz (1:17.4)			i	Product		
n_2 [r/min]	M_2 [Nm]	c	n_{22} [r/min]	M_{22} [Nm]	n_{21} [r/min]	M_2 [Nm]	n_2 [r/min]	M_2 [Nm]	c	n_2 [r/min]	M_2 [Nm]	c		g500	MD□MA□□	
75	7.0	5.7	7.6	7.4	32	7.0	75	7.0	5.7	133	8.0	5.2	19.013	-H45	063-02	76
67	8.0	5.3	6.8	8.3	28	8.0	67	8.0	5.3	119	9.0	4.9	21.350	-H45	063-02	76

Product Gearbox

Product Motor

Ratio i

Page number for dimensions

Load capacity c of the gearbox
c is the ratio between the permissible rated torque of the gearbox and the rated torque of the three-phase AC motor (converted to the driven shaft).
c must be always higher than the service factor **k** determined for the application **k**.

$$c = \frac{M_{2,zul}}{M_{1,N} \cdot i \cdot \eta_{Getr}} > k$$

Mains operation
Output speed **n2**
Output torque **M2**

Inverter operation
The speed and torque data are valid for self-ventilated and forced ventilated drives. Forced ventilated drives can always output the torque **M2** in the entire setting ranges. In the case of self-ventilated drives, a reduction to **M22** is required in the lower speed range.

The following applies to self-ventilated geared motors:
n22 is the minimum speed where the torque **M22** is permissible, from **n21** to **n2**, the maximum torque is **M2**
The following applies to forced ventilated geared motors:
From the minimum speed **n22** to **n2**, the maximum torque is **M2**

Motor voltages

The power values and torques indicated in the selection tables relate to the following motor voltages:
- 50 Hz : Δ 230 V / Y 400 V
- 60 Hz : 230 V or 460 V
- 87 Hz : Δ 400 V

Operation at 87 Hz

In 87 Hz operation, the three-phase AC motor (which is designed for a voltage of Δ 230 V / Y 400 V at 50 Hz) is operated on an inverter with 400 V rated voltage in a delta connection. It is important to note here that the inverter must be configured for 87Hz output.
This offers the following advantages over 50 Hz operation:
- the setting range of the motor is increased by a factor of 1.73.
- the motor can then provide around 1.73 times greater output, which in turn allows a smaller and more affordable motor to be selected for the application.
- the efficiency of the motor is also improved.



Selection tables, notes

Notes on the selection tables with 2-pole and 6-pole motors

The selection tables show the available combinations of gearbox type, number of stages, ratio and motor. They are used only to provide basic orientation.
The following legend indicates the structure of the selection tables.

Rated power Prated of the drive motor depending on the rated frequency

50 Hz: P_N = 0.18 kW

2-stufige Getriebe ← **Number of the gear stage of the gearbox**

Mains operation 400 V, 50 Hz			i	Product		
n_2 [r/min]	M_2 [Nm]	c		g500	MD□MA□□	
141	12	5.8	19.486	-H100	063-11	97
123	14	5.8	22.314	-H100	063-11	97

Mains operation
Output speed **n2**
Output torque **M2**

Load capacity c of the gearbox
c is the ratio between the permissible rated torque of the gearbox and the rated torque of the three-phase AC motor (converted to the driven shaft).
c must be always higher than the service factor **k** determined for the application **k**.

$$c = \frac{M_{2,zul}}{M_{1N} \cdot i \cdot \eta_{Getr}} > k$$

Ratio i

Product Gearbox

Product Motor

Page number for dimensions

6.3

Motor voltages

The power values and torques indicated in the selection tables relate to the following motor voltages:
- 50 Hz : Δ 230 V / Y 400 V
- 60 Hz : 230 V or 460 V



Selection tables, 4-pole motors

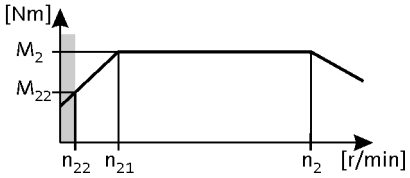

50 Hz: P_N = 0.06 kW
87 Hz: P_N = 0.11 kW

2-stage gearboxes

Netzbetrieb 400 V, 50 Hz			Umrichterbetrieb 5 Hz -		- 20 Hz		- 50 Hz (1:10)			- 87 Hz (1:17.4)			i	Produkt		
n_2 [r/min]	M_2 [Nm]	c	n_{22} [r/min]	M_{22} [Nm]	n_{21} [r/min]	M_2 [Nm]	n_2 [r/min]	M_2 [Nm]	c	n_2 [r/min]	M_2 [Nm]	c		g500	MD□MA□□	
75	7.0	5.7	7.6	7.4	32	7.0	75	7.0	5.7	133	8.0	5.2	19.013	-H45	063-02	64
67	8.0	5.3	6.8	8.3	28	8.0	67	8.0	5.3	119	9.0	4.9	21.350	-H45	063-02	64
58	10	4.7	5.9	9.6	24	10	58	10	4.7	103	10	4.3	24.595	-H45	063-02	64
52	11	4.2	5.3	11	22	11	52	11	4.2	92	11	3.9	27.618	-H45	063-02	64
45	12	3.6	4.5	13	19	12	45	12	3.6	79	13	3.3	32.000	-H45	063-02	64
40	14	3.2	4.0	14	17	14	40	14	3.2	71	14	3.0	35.933	-H45	063-02	64
34	16	2.8	3.5	16	15	16	34	16	2.8	61	17	2.6	41.455	-H45	063-02	64
31	18	2.5	3.1	18	13	18	31	18	2.5	55	19	2.4	46.550	-H45	063-02	64
27	21	2.2	2.7	21	11	21	27	21	2.2	48	21	2.1	52.909	-H45	063-02	64
24	23	1.9	2.4	23	10	23	24	23	1.9	43	24	1.9	59.413	-H45	063-02	64



Selection tables, 4-pole motors

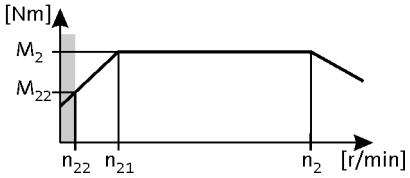

50 Hz: P_N = 0.09 kW
87 Hz: P_N = 0.16 kW

2-stage gearboxes

Netzbetrieb 400 V, 50 Hz			Umrichterbetrieb 5 Hz -		- 20 Hz		- 50 Hz (1:10)			- 87 Hz (1:17.4)			i	Produkt		
n_2 [r/min]	M_2 [Nm]	c	n_{22} [r/min]	M_{22} [Nm]	n_{21} [r/min]	M_2 [Nm]	n_2 [r/min]	M_2 [Nm]	c	n_2 [r/min]	M_2 [Nm]	c		g500	MD□MA□□	
137	6.0	5.8	15	6.0	60	6.0	137	6.0	5.8	248	6.0	4.9	10.033	-H45	063-22	64
120	7.0	5.1	13	6.8	53	7.0	120	7.0	5.1	217	7.0	4.3	11.429	-H45	063-22	64
107	8.0	4.9	11	7.7	47	8.0	107	8.0	4.9	194	8.0	4.2	12.833	-H45	063-22	64
93	9.0	4.3	9.8	8.9	40	9.0	93	9.0	4.3	168	9.0	3.7	14.836	-H45	063-22	64
83	10	4.1	8.7	10	36	10	83	10	4.1	149	10	4.0	16.660	-H45	063-22	64
72	12	3.6	7.6	11	32	11	72	12	3.6	131	11	3.6	19.013	-H45	063-22	64
64	13	3.4	6.8	13	28	13	64	13	3.4	116	13	3.3	21.350	-H45	063-22	64
56	15	3.0	5.9	15	24	15	56	15	3.0	101	15	3.0	24.595	-H45	063-22	64
50	17	2.7	5.3	17	22	16	50	17	2.7	90	16	2.6	27.618	-H45	063-22	64
43	19	2.3	4.5	19	19	19	43	19	2.3	78	19	2.3	32.000	-H45	063-22	64
38	22	2.1	4.0	21	17	21	38	22	2.1	69	21	2.0	35.933	-H45	063-22	64
33	25	1.8	3.5	25	15	25	33	25	1.8	60	25	1.8	41.455	-H45	063-22	64
30	28	1.6	3.1	28	13	28	30	28	1.6	53	28	1.6	46.550	-H45	063-22	64
26	32	1.4	2.7	32	11	32	26	32	1.4	47	32	1.4	52.909	-H45	063-22	64
23	36	1.3	2.4	35	10	35	23	36	1.3	42	35	1.3	59.413	-H45	063-22	64



Selection tables, 4-pole motors

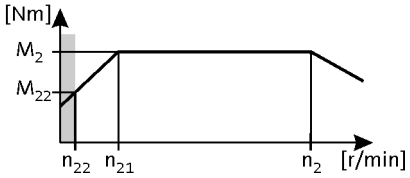

50 Hz: P_N = 0.12 kW
87 Hz: P_N = 0.21 kW

2-stage gearboxes

Netzbetrieb 400 V, 50 Hz			Umrichterbetrieb 5 Hz -		- 20 Hz		- 50 Hz (1:10)			- 87 Hz (1:17.4)			i	Produkt		
n_2 [r/min]	M_2 [Nm]	c	n_{22} [r/min]	M_{22} [Nm]	n_{21} [r/min]	M_2 [Nm]	n_2 [r/min]	M_2 [Nm]	c	n_2 [r/min]	M_2 [Nm]	c		g500	MD□MA□□	
204	5.0	5.5	21	4.2	86	5.0	204	5.0	5.5	363	5.0	4.7	6.982	-H45	063-12	64
182	6.0	5.2	19	4.7	77	6.0	182	6.0	5.2	323	6.0	4.5	7.840	-H45	063-12	64
160	7.0	4.7	16	5.4	67	7.0	160	7.0	4.7	284	7.0	4.0	8.935	-H45	063-12	64
142	8.0	4.5	15	6.0	60	8.0	142	8.0	4.5	253	8.0	3.8	10.033	-H45	063-12	64
125	9.0	3.9	13	6.9	53	9.0	125	9.0	3.9	222	9.0	3.4	11.429	-H45	063-12	64
111	10	3.8	11	7.7	47	10	111	10	3.8	198	10	3.2	12.833	-H45	063-12	64
96	12	3.4	9.8	8.9	40	11	96	12	3.4	171	11	2.9	14.836	-H45	063-12	64
86	13	3.2	8.7	10	36	13	86	13	3.2	152	13	3.1	16.660	-H45	063-12	64
75	15	2.8	7.6	11	32	15	75	15	2.8	133	15	2.8	19.013	-H45	063-12	64
73	15	5.5	7.4	12	31	15	73	15	5.5	130	15	4.7	19.486	-H100	063-12	67
67	17	2.6	6.8	13	28	16	67	17	2.6	119	16	2.6	21.350	-H45	063-12	64
64	17	5.5	6.5	13	27	17	64	17	5.5	114	17	4.7	22.314	-H100	063-12	67
58	19	2.4	5.9	15	24	19	58	19	2.4	103	19	2.3	24.595	-H45	063-12	64
57	20	4.6	5.8	15	24	19	57	20	4.6	101	19	3.9	25.095	-H100	063-12	67
52	22	2.1	5.3	17	22	21	52	22	2.1	92	21	2.0	27.618	-H45	063-12	64
50	22	4.5	5.0	17	21	22	50	22	4.5	88	22	4.3	28.738	-H100	063-12	67
45	25	4.0	4.6	19	19	24	45	25	4.0	80	24	3.9	31.805	-H100	063-12	67
45	25	1.8	4.5	19	19	25	45	25	1.8	79	25	1.8	32.000	-H45	063-12	64
40	28	1.6	4.0	22	17	28	40	28	1.6	71	28	1.6	35.933	-H45	063-12	64
39	28	3.5	4.0	22	17	28	39	28	3.5	70	28	3.4	36.422	-H100	063-12	67
36	31	3.2	3.6	24	15	31	36	31	3.2	64	31	3.1	39.857	-H100	063-12	67
34	32	1.4	3.5	25	15	32	34	32	1.4	61	32	1.4	41.455	-H45	063-12	64
31	36	2.8	3.2	27	13	35	31	36	2.8	56	35	2.9	45.643	-H100	063-12	67
31	36	1.2	3.1	28	13	36	31	36	1.2	55	36	1.3	46.550	-H45	063-12	64
27	41	1.7	2.8	32	11	40	27	41	1.7	48	40	1.7	52.510	-H100	063-12	67
27	41	1.1	2.7	32	11	41	27	41	1.1	48	41	1.1	52.909	-H45	063-12	64
26	42	3.1	2.7	33	11	42	26	42	3.1	47	42	3.2	54.438	-H210	063-12	73
25	44	3.2	2.6	34	11	43	25	44	3.2	45	43	3.3	56.077	-H140	063-12	70
24	47	1.7	2.4	36	10	46	24	47	1.7	42	46	1.7	60.133	-H100	063-12	67
23	48	3.1	2.4	37	9.8	47	23	48	3.1	42	47	3.2	60.938	-H210	063-12	73
21	52	1.7	2.2	40	9.0	51	21	52	1.7	38	51	1.7	66.908	-H140	063-12	70
19	58	1.7	2.0	44	8.1	57	19	58	1.7	34	57	1.7	73.879	-H140	063-12	70

3-stage gearboxes

Netzbetrieb 400 V, 50 Hz			Umrichterbetrieb 5 Hz -		- 20 Hz		- 50 Hz (1:10)			- 87 Hz (1:17.4)			i	Produkt		
n_2 [r/min]	M_2 [Nm]	c	n_{22} [r/min]	M_{22} [Nm]	n_{21} [r/min]	M_2 [Nm]	n_2 [r/min]	M_2 [Nm]	c	n_2 [r/min]	M_2 [Nm]	c		g500	MD□MA□□	
18	61	3.4	1.8	47	7.5	60	18	61	3.4	32	60	3.3	79.507	-H210	063-12	73
16	71	3.0	1.6	55	6.5	70	16	71	3.0	28	70	3.0	92.205	-H210	063-12	73
14	79	2.7	1.4	61	5.8	78	14	79	2.7	25	78	2.7	103.214	-H210	063-12	73



Selection tables, 4-pole motors

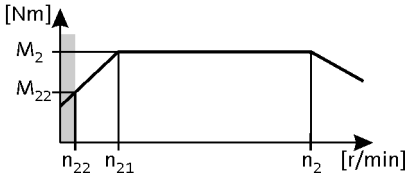

50 Hz: P_N = 0.12 kW
87 Hz: P_N = 0.21 kW

3-stage gearboxes

Netzbetrieb 400 V, 50 Hz			Umrichterbetrieb 5 Hz -		- 20 Hz		- 50 Hz (1:10)			- 87 Hz (1:17.4)			i	Produkt		
n_2 [r/min]	M_2 [Nm]	c	n_{22} [r/min]	M_{22} [Nm]	n_{21} [r/min]	M_2 [Nm]	n_2 [r/min]	M_2 [Nm]	c	n_2 [r/min]	M_2 [Nm]	c		g500	MD□MA□□	
12	91	2.3	1.2	70	5.1	89	12	91	2.3	22	89	2.4	118.162	-H210	063-12	73
11	99	3.2	1.1	76	4.7	97	11	99	3.2	20	97	3.3	128.743	-H320	063-12	76
11	102	2.1	1.1	78	4.5	100	11	102	2.1	19	100	2.1	132.270	-H210	063-12	73
9.7	112	2.9	1.0	87	4.1	111	9.7	112	2.9	17	111	2.9	146.244	-H320	063-12	76
9.3	117	1.8	0.9	91	3.9	116	9.3	117	1.8	17	116	1.8	152.853	-H210	063-12	73
8.6	128	2.5	0.9	99	3.6	126	8.6	128	2.5	15	126	2.5	166.541	-H320	063-12	76
8.3	131	1.6	0.8	101	3.5	129	8.3	131	1.6	15	129	1.6	171.104	-H210	063-12	73
7.5	145	2.2	0.8	112	3.2	143	7.5	145	2.2	13	143	2.2	189.179	-H320	063-12	76
7.2	152	3.0	0.7	117	3.0	150	7.2	152	3.0	13	150	3.0	198.059	-H450	063-12	79
7.2	153	1.4	0.7	118	3.0	150	7.2	153	1.4	13	150	1.4	198.873	-H210	063-12	73
6.6	167	1.9	0.7	128	2.8	164	6.6	167	1.9	12	164	1.9	216.683	-H320	063-12	76
6.4	171	1.2	0.7	132	2.7	168	6.4	171	1.2	11	168	1.3	222.619	-H210	063-12	73
6.4	172	2.6	0.6	133	2.7	169	6.4	172	2.6	11	169	2.7	223.833	-H450	063-12	79
5.8	189	1.7	0.6	146	2.4	186	5.8	189	1.7	10	186	1.7	246.137	-H320	063-12	76
5.7	191	2.4	0.6	147	2.4	188	5.7	191	2.4	10	188	2.4	248.200	-H450	063-12	79
5.5	198	1.1	0.6	153	2.3	195	5.5	198	1.1	9.8	195	1.1	257.631	-H210	063-12	73
5.1	216	2.1	0.5	166	2.1	212	5.1	216	2.1	9.0	212	2.1	280.500	-H450	063-12	79
5.1	216	1.3	0.5	166	2.1	212	5.1	216	1.3	9.0	212	1.3	280.702	-H320	063-12	76
4.5	245	1.3	0.5	189	1.9	241	4.5	245	1.3	8.0	241	1.3	318.859	-H320	063-12	76
4.4	251	1.7	0.4	194	1.8	247	4.4	251	1.7	7.8	247	1.7	326.994	-H450	063-12	79
3.9	284	1.6	0.4	219	1.6	279	3.9	284	1.6	6.9	279	1.6	369.548	-H450	063-12	79



Selection tables, 4-pole motors

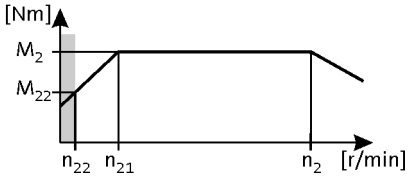

50 Hz: P_N = 0.18 kW
87 Hz: P_N = 0.33 kW

2-stage gearboxes

Netzbetrieb 400 V, 50 Hz			Umrichterbetrieb 5 Hz -		- 20 Hz		- 50 Hz (1:10)			- 87 Hz (1:17.4)			i	Produkt		
n_2 [r/min]	M_2 [Nm]	c	n_{22} [r/min]	M_{22} [Nm]	n_{21} [r/min]	M_2 [Nm]	n_2 [r/min]	M_2 [Nm]	c	n_2 [r/min]	M_2 [Nm]	c		g500	MD□MA□□	
526	3.0	4.7	56	2.4	231	3.0	526	3.0	4.7	953	3.0	3.9	2.597	-H45	063-32	64
400	4.0	4.5	43	3.2	176	4.0	400	4.0	4.5	725	4.0	3.7	3.413	-H45	063-32	64
313	5.0	3.9	33	4.1	137	5.0	313	5.0	3.9	567	5.0	3.3	4.368	-H45	063-32	64
257	6.0	4.2	27	5.0	113	6.0	257	6.0	4.2	466	7.0	3.5	5.312	-H45	063-32	64
229	7.0	4.0	24	5.6	101	7.0	229	7.0	4.0	415	7.0	3.3	5.965	-H45	063-32	64
212	8.0	4.5	23	6.1	93	8.0	212	8.0	4.5	384	8.0	3.7	6.440	-H100	063-32	67
196	9.0	3.5	21	6.6	86	9.0	196	9.0	3.5	355	9.0	2.9	6.982	-H45	063-32	64
174	10	3.3	19	7.4	77	10	174	10	3.3	316	10	2.8	7.840	-H45	063-32	64
166	10	4.1	18	7.7	73	10	166	10	4.1	301	10	3.5	8.214	-H100	063-32	67
153	11	3.0	16	8.4	67	11	153	11	3.0	277	11	2.5	8.935	-H45	063-32	64
136	12	2.9	15	9.4	60	12	136	12	2.9	247	12	2.4	10.033	-H45	063-32	64
120	14	4.5	13	11	53	14	120	14	4.5	218	14	3.7	11.360	-H100	063-32	67
119	14	2.5	13	11	53	14	119	14	2.5	217	14	2.1	11.429	-H45	063-32	64
108	15	4.1	12	12	47	15	108	15	4.1	196	16	3.5	12.653	-H100	063-32	67
106	16	2.4	11	12	47	16	106	16	2.4	193	16	2.0	12.833	-H45	063-32	64
94	18	4.1	10	14	41	18	94	18	4.1	171	18	3.5	14.490	-H100	063-32	67
92	18	2.2	9.8	14	40	18	92	18	2.2	167	18	1.8	14.836	-H45	063-32	64
85	20	4.1	9.0	15	37	20	85	20	4.1	154	20	3.5	16.122	-H140	063-32	70
82	20	2.0	8.7	16	36	20	82	20	2.0	149	21	1.9	16.660	-H45	063-32	64
77	22	4.1	8.1	17	34	22	77	22	4.1	139	22	3.5	17.802	-H140	063-32	70
72	23	1.8	7.6	18	32	23	72	23	1.8	130	23	1.7	19.013	-H45	063-32	64
70	24	3.5	7.4	18	31	24	70	24	3.5	127	24	2.9	19.486	-H100	063-32	67
64	26	1.7	6.8	20	28	26	64	26	1.7	116	26	1.6	21.350	-H45	063-32	64
61	27	3.5	6.5	21	27	27	61	27	3.5	111	28	2.9	22.314	-H100	063-32	67
56	30	1.5	5.9	23	24	30	56	30	1.5	101	30	1.4	24.595	-H45	063-32	64
54	31	2.9	5.8	24	24	31	54	31	2.9	99	31	2.5	25.095	-H100	063-32	67
49	34	1.3	5.3	26	22	34	49	34	1.3	90	34	1.3	27.618	-H45	063-32	64
48	35	2.9	5.0	27	21	35	48	35	2.9	86	36	2.7	28.738	-H100	063-32	67
43	39	2.6	4.6	30	19	39	43	39	2.6	78	39	2.4	31.805	-H100	063-32	67
43	39	2.9	4.5	30	19	39	43	39	2.9	77	40	2.8	31.976	-H140	063-32	70
43	39	1.2	4.5	30	19	39	43	39	1.2	77	40	1.1	32.000	-H45	063-32	64
39	43	2.9	4.1	33	17	43	39	43	2.9	71	43	2.8	35.095	-H210	063-32	73
39	43	2.9	4.1	33	17	43	39	43	2.9	70	44	2.8	35.308	-H140	063-32	70
38	44	1.0	4.0	34	17	44	38	44	1.0				35.933	-H45	063-32	64
38	44	2.3	4.0	34	17	44	38	44	2.3	68	45	2.1	36.422	-H100	063-32	67



Selection tables, 4-pole motors

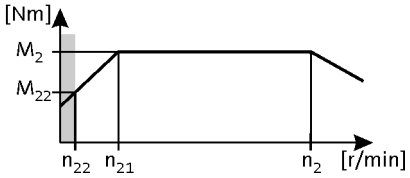

50 Hz: P_N = 0.18 kW
87 Hz: P_N = 0.33 kW

2-stage gearboxes

Netzbetrieb 400 V, 50 Hz			Umrichterbetrieb 5 Hz -		- 20 Hz		- 50 Hz (1:10)			- 87 Hz (1:17.4)			i	Produkt		
n_2 [r/min]	M_2 [Nm]	c	n_{22} [r/min]	M_{22} [Nm]	n_{21} [r/min]	M_2 [Nm]	n_2 [r/min]	M_2 [Nm]	c	n_2 [r/min]	M_2 [Nm]	c		g500	MD□MA□□	
36	47	2.9	3.8	36	16	47	36	47	2.9	65	47	2.8	38.238	-H320	063-32	76
35	48	2.9	3.7	37	15	48	35	48	2.9	63	49	2.8	39.286	-H210	063-32	73
34	49	2.1	3.6	38	15	49	34	49	2.1	62	49	2.0	39.857	-H100	063-32	67
34	50	2.6	3.6	38	15	50	34	50	2.6	61	50	2.5	40.526	-H140	063-32	70
32	52	2.6	3.4	40	14	52	32	52	2.6	58	53	2.5	42.593	-H210	063-32	73
31	53	2.9	3.3	41	14	53	31	53	2.9	57	54	2.9	43.436	-H320	063-32	76
31	55	2.6	3.2	42	13	55	31	55	2.6	55	55	2.5	44.748	-H140	063-32	70
30	56	1.8	3.2	43	13	56	30	56	1.8	54	56	1.8	45.643	-H100	063-32	67
29	57	2.6	3.1	44	13	57	29	57	2.6	53	57	2.5	46.407	-H320	063-32	76
29	58	2.6	3.0	45	13	58	29	58	2.6	52	59	2.5	47.679	-H210	063-32	73
27	62	2.1	2.9	48	12	62	27	62	2.1	49	63	2.1	50.786	-H140	063-32	70
26	64	1.1	2.8	49	11	64	26	64	1.1	47	65	1.1	52.510	-H100	063-32	67
26	64	2.6	2.8	50	11	64	26	64	2.6	47	65	2.5	52.715	-H320	063-32	76
25	67	2.0	2.7	51	11	67	25	67	2.0	46	67	2.0	54.438	-H210	063-32	73
24	69	2.0	2.6	53	11	69	24	69	2.0	44	69	2.0	56.077	-H140	063-32	70
23	73	1.1	2.4	57	10	73	23	73	1.1	41	74	1.1	60.133	-H100	063-32	67
22	74	2.0	2.4	57	9.8	74	22	74	2.0	41	75	2.0	60.938	-H210	063-32	73
20	82	1.1	2.2	63	9.0	82	20	82	1.1	37	83	1.1	66.908	-H140	063-32	70
19	90	1.1	2.0	70	8.1	90	19	90	1.1	34	91	1.1	73.879	-H140	063-32	70

3-stage gearboxes

Netzbetrieb 400 V, 50 Hz			Umrichterbetrieb 5 Hz -		- 20 Hz		- 50 Hz (1:10)			- 87 Hz (1:17.4)			i	Produkt		
n_2 [r/min]	M_2 [Nm]	c	n_{22} [r/min]	M_{22} [Nm]	n_{21} [r/min]	M_2 [Nm]	n_2 [r/min]	M_2 [Nm]	c	n_2 [r/min]	M_2 [Nm]	c		g500	MD□MA□□	
25	67	3.1	2.6	52	11	67	25	67	3.1	45	68	3.0	55.529	-H210	063-32	73
22	75	2.8	2.3	58	9.7	75	22	75	2.8	40	76	2.7	62.160	-H210	063-32	73
19	85	2.5	2.0	66	8.4	85	19	85	2.5	35	86	2.3	71.026	-H210	063-32	73
17	96	2.2	1.8	74	7.5	96	17	96	2.2	31	97	2.1	79.507	-H210	063-32	73
16	106	3.0	1.6	82	6.8	106	16	106	3.0	28	107	3.0	87.906	-H320	063-32	76
15	111	1.9	1.6	85	6.5	111	15	111	1.9	27	112	1.9	92.205	-H210	063-32	73
14	121	2.7	1.4	93	6.0	121	14	121	2.7	25	122	2.6	100.462	-H320	063-32	76
13	124	1.7	1.4	96	5.8	124	13	124	1.7	24	126	1.7	103.214	-H210	063-32	73
12	137	2.3	1.3	106	5.3	137	12	137	2.3	22	139	2.3	114.118	-H320	063-32	76
12	142	1.5	1.2	110	5.1	142	12	142	1.5	21	144	1.5	118.162	-H210	063-32	73
11	146	3.1	1.2	112	4.9	146	11	146	3.1	20	148	3.1	121.342	-H450	063-32	79
11	155	2.1	1.1	119	4.7	155	11	155	2.1	19	157	2.0	128.743	-H320	063-32	76
10	159	1.3	1.1	123	4.5	159	10	159	1.3	19	161	1.3	132.270	-H210	063-32	73
10	165	2.7	1.1	127	4.4	165	10	165	2.7	18	167	2.7	137.133	-H450	063-32	79
9.3	176	1.8	1.0	136	4.1	176	9.3	176	1.8	17	178	1.8	146.244	-H320	063-32	76
8.9	184	1.1	0.9	142	3.9	184	8.9	184	1.1	16	186	1.1	152.853	-H210	063-32	73



Selection tables, 4-pole motors

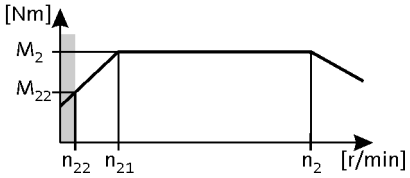

50 Hz: P_N = 0.18 kW
87 Hz: P_N = 0.33 kW

3-stage gearboxes

Netzbetrieb 400 V, 50 Hz			Umrichterbetrieb 5 Hz -		- 20 Hz		- 50 Hz (1:10)			- 87 Hz (1:17.4)			i	Produkt		
n_2 [r/min]	M_2 [Nm]	c	n_{22} [r/min]	M_{22} [Nm]	n_{21} [r/min]	M_2 [Nm]	n_2 [r/min]	M_2 [Nm]	c	n_2 [r/min]	M_2 [Nm]	c		g500	MD□MA□□	
8.7	188	2.4	0.9	145	3.8	188	8.7	188	2.4	16	190	2.4	156.274	-H450	063-32	79
8.2	200	1.6	0.9	154	3.6	200	8.2	200	1.6	15	203	1.6	166.541	-H320	063-32	76
8.0	206	1.0	0.8	159	3.5	206	8.0	206	1.0	15	208	1.0	171.104	-H210	063-32	73
7.7	213	2.1	0.8	164	3.4	213	7.7	213	2.1	14	215	2.1	176.611	-H450	063-32	79
7.2	228	1.4	0.8	175	3.2	228	7.2	228	1.4	13	230	1.4	189.179	-H320	063-32	76
6.9	238	1.9	0.7	184	3.0	238	6.9	238	1.9	13	241	1.9	198.059	-H450	063-32	79
6.3	261	1.2	0.7	201	2.8	261	6.3	261	1.2	11	264	1.2	216.683	-H320	063-32	76
6.1	269	1.7	0.6	207	2.7	269	6.1	269	1.7	11	272	1.7	223.833	-H450	063-32	79
5.5	296	1.1	0.6	228	2.4	296	5.5	296	1.1	10	299	1.1	246.137	-H320	063-32	76
5.5	299	1.5	0.6	230	2.4	299	5.5	299	1.5	10	302	1.5	248.200	-H450	063-32	79
4.9	338	1.3	0.5	260	2.1	338	4.9	338	1.3	8.8	341	1.3	280.500	-H450	063-32	79
4.2	394	1.1	0.4	303	1.8	394	4.2	394	1.1	7.6	398	1.1	326.994	-H450	063-32	79
3.7	445	1.0	0.4	342	1.6	445	3.7	445	1.0	6.7	450	1.0	369.548	-H450	063-32	79



Selection tables, 4-pole motors

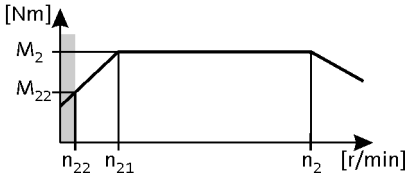

50 Hz: P_N = 0.25 kW
87 Hz: P_N = 0.45 kW

2-stage gearboxes

Netzbetrieb 400 V, 50 Hz			Umrichterbetrieb 5 Hz -		- 20 Hz		- 50 Hz (1:10)			- 87 Hz (1:17.4)			i	Produkt		
n_2 [r/min]	M_2 [Nm]	c	n_{22} [r/min]	M_{22} [Nm]	n_{21} [r/min]	M_2 [Nm]	n_2 [r/min]	M_2 [Nm]	c	n_2 [r/min]	M_2 [Nm]	c		g500	MD□MA□□	
528	4.0	4.1	56	3.4	231	4.0	528	4.0	4.1	955	4.0	3.5	2.597	-H45	063-42	64
419	6.0	5.6	44	4.3	184	5.0	419	6.0	5.6	759	5.0	4.8	3.267	-H140	063-42	70
408	6.0	5.6	43	4.4	179	6.0	408	6.0	5.6	739	6.0	4.8	3.354	-H100	063-42	67
401	6.0	3.3	43	4.4	176	6.0	401	6.0	3.3	727	6.0	2.8	3.413	-H45	063-42	64
314	7.0	2.8	33	5.7	137	7.0	314	7.0	2.8	568	7.0	2.4	4.368	-H45	063-42	64
298	8.0	5.6	32	6.0	130	8.0	298	8.0	5.6	539	8.0	4.8	4.600	-H100	063-42	67
265	9.0	5.6	28	6.7	116	9.0	265	9.0	5.6	480	9.0	4.8	5.167	-H100	063-42	67
258	9.0	3.0	27	6.9	113	9.0	258	9.0	3.0	467	9.0	2.6	5.312	-H45	063-42	64
233	10	5.2	25	7.7	102	10	233	10	5.2	421	10	4.4	5.887	-H100	063-42	67
230	10	2.9	24	7.8	101	10	230	10	2.9	416	10	2.5	5.965	-H45	063-42	64
213	11	5.2	23	8.4	93	11	213	11	5.2	385	11	4.4	6.440	-H100	063-42	67
196	12	2.5	21	9.1	86	12	196	12	2.5	355	12	2.2	6.982	-H45	063-42	64
193	12	5.6	21	9.2	85	12	193	12	5.6	350	12	4.8	7.086	-H100	063-42	67
175	13	2.4	19	10	77	13	175	13	2.4	316	13	2.1	7.840	-H45	063-42	64
167	14	4.8	18	11	73	14	167	14	4.8	302	14	4.1	8.214	-H100	063-42	67
153	15	2.2	16	12	67	15	153	15	2.2	278	15	1.9	8.935	-H45	063-42	64
151	15	5.2	16	12	66	15	151	15	5.2	274	15	4.4	9.068	-H100	063-42	67
137	17	2.1	15	13	60	17	137	17	2.1	247	17	1.8	10.033	-H45	063-42	64
136	17	4.3	14	13	60	17	136	17	4.3	247	17	3.7	10.063	-H100	063-42	67
121	19	5.2	13	15	53	19	121	19	5.2	218	19	4.4	11.360	-H100	063-42	67
120	19	1.8	13	15	53	19	120	19	1.8	217	19	1.5	11.429	-H45	063-42	64
108	21	4.7	12	17	47	21	108	21	4.7	196	21	4.0	12.653	-H100	063-42	67
107	22	1.8	11	17	47	22	107	22	1.8	193	22	1.5	12.833	-H45	063-42	64
95	24	4.1	10	19	41	24	95	24	4.1	171	24	3.5	14.490	-H100	063-42	67
92	25	1.6	9.8	19	40	25	92	25	1.6	167	25	1.3	14.836	-H45	063-42	64
88	26	3.8	9.4	20	39	26	88	26	3.8	160	26	3.3	15.500	-H100	063-42	67
82	28	1.5	8.7	22	36	28	82	28	1.5	149	28	1.4	16.660	-H45	063-42	64
77	30	3.3	8.2	23	34	30	77	30	3.3	140	30	2.8	17.750	-H100	063-42	67
72	32	1.3	7.6	25	32	32	72	32	1.3	130	32	1.3	19.013	-H45	063-42	64
70	33	3.0	7.4	25	31	33	70	33	3.0	127	33	2.6	19.486	-H100	063-42	67
64	36	1.2	6.8	28	28	36	64	36	1.2	116	36	1.2	21.350	-H45	063-42	64
61	38	2.7	6.5	29	27	38	61	38	2.7	111	38	2.3	22.314	-H100	063-42	67
56	42	1.1	5.9	32	24	41	56	42	1.1	101	41	1.1	24.595	-H45	063-42	64
55	42	2.4	5.8	33	24	42	55	42	2.4	99	42	2.0	25.095	-H100	063-42	67
50	46	3.0	5.3	36	22	46	50	46	3.0	91	46	2.9	27.415	-H140	063-42	70



Selection tables, 4-pole motors

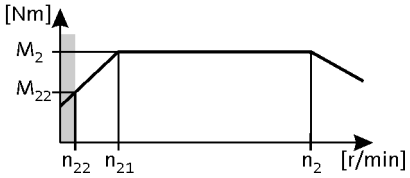

50 Hz: P_N = 0.25 kW
87 Hz: P_N = 0.45 kW

2-stage gearboxes

Netzbetrieb 400 V, 50 Hz			Umrichterbetrieb 5 Hz -		- 20 Hz		- 50 Hz (1:10)			- 87 Hz (1:17.4)			i	Produkt		
n_2 [r/min]	M_2 [Nm]	c	n_{22} [r/min]	M_{22} [Nm]	n_{21} [r/min]	M_2 [Nm]	n_2 [r/min]	M_2 [Nm]	c	n_2 [r/min]	M_2 [Nm]	c		g500	MD□MA□□	
48	49	2.1	5.0	37	21	48	48	49	2.1	86	48	2.0	28.738	-H100	063-42	67
43	54	1.9	4.6	41	19	53	43	54	1.9	78	53	1.8	31.805	-H100	063-42	67
43	54	2.6	4.5	42	19	54	43	54	2.6	78	54	2.5	31.976	-H140	063-42	70
39	60	2.4	4.1	46	17	59	39	60	2.4	70	59	2.3	35.308	-H140	063-42	70
38	62	1.6	4.0	47	17	61	38	62	1.6	68	61	1.6	36.422	-H100	063-42	67
35	66	3.2	3.7	51	15	66	35	66	3.2	63	66	3.1	39.286	-H210	063-42	73
34	67	1.2	3.6	52	15	67	34	67	1.2	62	67	1.2	39.857	-H100	063-42	67
34	69	2.0	3.6	53	15	68	34	69	2.0	61	68	2.1	40.526	-H140	063-42	70
32	72	2.5	3.4	55	14	72	32	72	2.5	58	72	2.6	42.593	-H210	063-42	73
32	73	3.2	3.3	56	14	73	32	73	3.2	57	73	3.2	43.313	-H450	063-42	79
31	76	1.9	3.2	58	13	75	31	76	1.9	55	75	1.9	44.748	-H140	063-42	70
30	77	1.2	3.2	59	13	77	30	77	1.2	54	77	1.2	45.643	-H100	063-42	67
30	78	2.8	3.1	60	13	78	30	78	2.8	53	78	2.8	46.407	-H320	063-42	76
29	81	2.6	3.0	62	13	80	29	81	2.6	52	80	2.6	47.679	-H210	063-42	73
28	83	3.2	3.0	64	12	82	28	83	3.2	51	82	3.2	48.950	-H450	063-42	79
27	86	1.2	2.9	66	12	85	27	86	1.2	49	85	1.2	50.786	-H140	063-42	70
26	89	2.8	2.8	69	11	89	26	89	2.8	47	89	2.8	52.715	-H320	063-42	76
25	92	1.4	2.7	71	11	92	25	92	1.4	46	92	1.4	54.438	-H210	063-42	73
25	93	2.6	2.6	71	11	92	25	93	2.6	45	92	2.6	54.750	-H450	063-42	79
24	95	1.2	2.6	73	11	94	24	95	1.2	44	94	1.2	56.077	-H140	063-42	70
23	103	1.4	2.4	79	9.8	102	23	103	1.4	41	102	1.4	60.938	-H210	063-42	73
22	105	2.6	2.3	81	9.7	104	22	105	2.6	40	104	2.6	61.875	-H450	063-42	79

3-stage gearboxes

Netzbetrieb 400 V, 50 Hz			Umrichterbetrieb 5 Hz -		- 20 Hz		- 50 Hz (1:10)			- 87 Hz (1:17.4)			i	Produkt		
n_2 [r/min]	M_2 [Nm]	c	n_{22} [r/min]	M_{22} [Nm]	n_{21} [r/min]	M_2 [Nm]	n_2 [r/min]	M_2 [Nm]	c	n_2 [r/min]	M_2 [Nm]	c		g500	MD□MA□□	
32	72	2.9	3.3	56	14	72	32	72	2.9	57	72	2.5	43.390	-H210	063-42	73
28	81	2.6	3.0	62	12	80	28	81	2.6	51	80	2.5	48.571	-H210	063-42	73
25	92	2.3	2.6	71	11	92	25	92	2.3	45	92	2.2	55.529	-H210	063-42	73
23	101	3.2	2.4	78	9.9	100	23	101	3.2	41	100	3.1	60.502	-H320	063-42	76
22	104	2.0	2.3	80	9.7	103	22	104	2.0	40	103	2.0	62.160	-H210	063-42	73
20	114	2.8	2.1	88	8.7	114	20	114	2.8	36	114	2.7	68.726	-H320	063-42	76
19	118	1.8	2.0	91	8.4	118	19	118	1.8	35	118	1.7	71.026	-H210	063-42	73
18	129	2.5	1.9	99	7.8	128	18	129	2.5	32	128	2.4	77.387	-H320	063-42	76
17	132	1.6	1.8	102	7.5	132	17	132	1.6	31	132	1.5	79.507	-H210	063-42	73
16	146	2.2	1.6	113	6.8	146	16	146	2.2	28	146	2.2	87.906	-H320	063-42	76
15	148	3.0	1.6	114	6.7	147	15	148	3.0	28	147	3.1	89.048	-H450	063-42	79
15	154	1.4	1.6	118	6.5	153	15	154	1.4	27	153	1.4	92.205	-H210	063-42	73
14	161	2.8	1.5	124	6.2	160	14	161	2.8	26	160	2.8	96.522	-H450	063-42	79



Selection tables, 4-pole motors

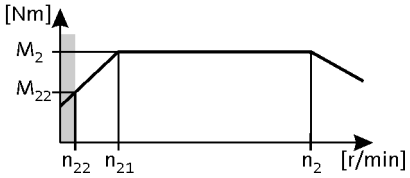

50 Hz: P_N = 0.25 kW
87 Hz: P_N = 0.45 kW

3-stage gearboxes

Netzbetrieb 400 V, 50 Hz			Umrichterbetrieb 5 Hz -		- 20 Hz		- 50 Hz (1:10)			- 87 Hz (1:17.4)			i	Produkt		
n_2 [r/min]	M_2 [Nm]	c	n_{22} [r/min]	M_{22} [Nm]	n_{21} [r/min]	M_2 [Nm]	n_2 [r/min]	M_2 [Nm]	c	n_2 [r/min]	M_2 [Nm]	c		g500	MD□MA□□	
14	167	1.9	1.4	129	6.0	166	14	167	1.9	25	166	1.9	100.462	-H320	063-42	76
13	172	1.2	1.4	132	5.8	171	13	172	1.2	24	171	1.2	103.214	-H210	063-42	73
13	182	2.5	1.3	140	5.5	181	13	182	2.5	23	181	2.5	109.083	-H450	063-42	79
12	190	1.7	1.3	146	5.3	189	12	190	1.7	22	189	1.7	114.118	-H320	063-42	76
12	197	1.1	1.2	152	5.1	196	12	197	1.1	21	196	1.1	118.162	-H210	063-42	73
11	202	2.2	1.2	156	4.9	201	11	202	2.2	20	201	2.2	121.342	-H450	063-42	79
11	214	1.5	1.1	165	4.7	213	11	214	1.5	19	213	1.5	128.743	-H320	063-42	76
10	228	2.0	1.1	176	4.4	227	10	228	2.0	18	227	2.0	137.133	-H450	063-42	79
9.4	244	1.3	1.0	188	4.1	242	9.4	244	1.3	17	242	1.3	146.244	-H320	063-42	76
8.8	260	1.7	0.9	200	3.8	259	8.8	260	1.7	16	259	1.7	156.274	-H450	063-42	79
8.2	277	1.2	0.9	214	3.6	276	8.2	277	1.2	15	276	1.2	166.541	-H320	063-42	76
7.8	294	1.5	0.8	227	3.4	292	7.8	294	1.5	14	292	1.5	176.611	-H450	063-42	79
7.2	315	1.0	0.8	243	3.2	313	7.2	315	1.0	13	313	1.0	189.179	-H320	063-42	76
6.9	330	1.4	0.7	254	3.0	328	6.9	330	1.4	13	328	1.4	198.059	-H450	063-42	79
6.1	373	1.2	0.6	287	2.7	371	6.1	373	1.2	11	371	1.2	223.833	-H450	063-42	79
5.5	413	1.1	0.6	318	2.4	411	5.5	413	1.1	10	411	1.1	248.200	-H450	063-42	79



Selection tables, 4-pole motors

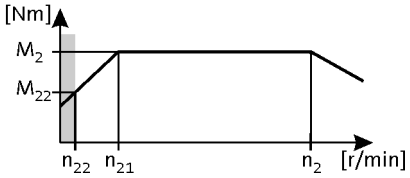

50 Hz: P_N = 0.37 kW
87 Hz: P_N = 0.66 kW

2-stage gearboxes

Netzbetrieb 400 V, 50 Hz			Umrichterbetrieb 5 Hz -		- 20 Hz		- 50 Hz (1:10)			- 87 Hz (1:17.4)			i	Produkt		
n_2 [r/min]	M_2 [Nm]	c	n_{22} [r/min]	M_{22} [Nm]	n_{21} [r/min]	M_2 [Nm]	n_2 [r/min]	M_2 [Nm]	c	n_2 [r/min]	M_2 [Nm]	c		g500	MD□MA□□	
543	6.0	2.9	56	4.9	231	6.0	543	6.0	2.9	970	6.0	2.4	2.597	-H45	071-32	64
432	8.0	4.9	44	6.1	184	8.0	432	8.0	4.9				3.267	-H140	071-32	70
420	8.0	4.9	43	6.3	179	8.0	420	8.0	4.9				3.354	-H100	071-32	67
413	8.0	2.3	43	6.4	176	8.0	413	8.0	2.3	738	8.0	1.9	3.413	-H45	071-32	64
323	11	2.0	33	8.2	137	11	323	11	2.0	577	11	1.7	4.368	-H45	071-32	64
307	11	4.9	32	8.6	130	11	307	11	4.9				4.600	-H100	071-32	67
273	13	4.9	28	9.7	116	13	273	13	4.9				5.167	-H100	071-32	67
265	13	2.1	27	9.9	113	13	265	13	2.1	474	13	1.8	5.312	-H45	071-32	64
240	14	4.5	25	11	102	14	240	14	4.5				5.887	-H100	071-32	67
236	15	2.0	24	11	101	14	236	15	2.0	422	14	1.7	5.965	-H45	071-32	64
219	16	4.5	23	12	93	16	219	16	4.5				6.440	-H100	071-32	67
202	17	1.8	21	13	86	17	202	17	1.8	361	17	1.5	6.982	-H45	071-32	64
199	17	4.9	21	13	85	17	199	17	4.9				7.086	-H100	071-32	67
180	19	1.7	19	15	77	19	180	19	1.7	321	19	1.4	7.840	-H45	071-32	64
172	20	4.2	18	15	73	20	172	20	4.2				8.214	-H100	071-32	67
158	22	1.5	16	17	67	22	158	22	1.5	282	22	1.3	8.935	-H45	071-32	64
156	22	4.4	16	17	66	22	156	22	4.4				9.068	-H100	071-32	67
141	24	1.4	15	19	60	24	141	24	1.4	251	24	1.2	10.033	-H45	071-32	64
140	24	3.7	14	19	60	24	140	24	3.7				10.063	-H100	071-32	67
124	28	3.6	13	21	53	28	124	28	3.6				11.360	-H100	071-32	67
123	28	1.3	13	21	53	28	123	28	1.3	221	28	1.1	11.429	-H45	071-32	64
111	31	3.3	12	24	47	31	111	31	3.3	199	31	2.7	12.653	-H100	071-32	67
110	31	1.2	11	24	47	31	110	31	1.2	196	31	1.0	12.833	-H45	071-32	64
97	35	2.8	10	27	41	35	97	35	2.8	174	35	2.4	14.490	-H100	071-32	67
95	36	1.1	9.8	28	40	36	95	36	1.1				14.836	-H45	071-32	64
91	38	2.7	9.4	29	39	38	91	38	2.7	163	38	2.2	15.500	-H100	071-32	67
85	41	1.0	8.7	31	36	41	85	41	1.0				16.660	-H45	071-32	64
79	43	2.3	8.2	33	34	43	79	43	2.3	142	43	2.0	17.750	-H100	071-32	67
79	43	3.2	8.1	33	34	43	79	43	3.2	142	43	2.7	17.802	-H140	071-32	70
72	47	2.1	7.4	37	31	47	72	47	2.1	129	47	1.8	19.486	-H100	071-32	67
71	48	2.9	7.3	37	30	48	71	48	2.9	128	48	2.5	19.750	-H140	071-32	70
65	53	2.6	6.6	41	28	53	65	53	2.6	116	53	2.2	21.808	-H140	071-32	70
63	54	1.8	6.5	42	27	54	63	54	1.8	113	54	1.6	22.314	-H100	071-32	67
57	60	2.3	5.8	47	24	60	57	60	2.3	102	60	2.0	24.829	-H140	071-32	70
56	61	1.6	5.8	47	24	61	56	61	1.6	100	61	1.4	25.095	-H100	071-32	67



Selection tables, 4-pole motors

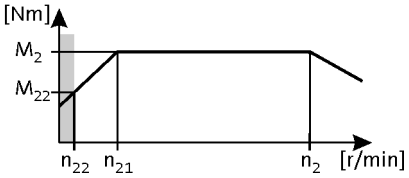

50 Hz: P_N = 0.37 kW
87 Hz: P_N = 0.66 kW

2-stage gearboxes

Netzbetrieb 400 V, 50 Hz			Umrichterbetrieb 5 Hz -		- 20 Hz		- 50 Hz (1:10)			- 87 Hz (1:17.4)			i	Produkt		
n_2 [r/min]	M_2 [Nm]	c	n_{22} [r/min]	M_{22} [Nm]	n_{21} [r/min]	M_2 [Nm]	n_2 [r/min]	M_2 [Nm]	c	n_2 [r/min]	M_2 [Nm]	c		g500	MD□MA□□	
52	66	3.2	5.3	51	22	66	52	66	3.2	93	66	3.0	27.119	-H210	071-32	73
51	67	2.1	5.3	51	22	67	51	67	2.1	92	67	2.0	27.415	-H140	071-32	70
49	70	1.4	5.0	54	21	70	49	70	1.4	88	70	1.4	28.738	-H100	071-32	67
48	72	3.2	4.9	55	20	72	48	72	3.2				29.548	-H320	071-32	76
46	74	2.9	4.8	57	20	74	46	74	2.9	83	74	2.7	30.357	-H210	071-32	73
44	77	1.3	4.6	60	19	77	44	77	1.3	79	77	1.2	31.805	-H100	071-32	67
44	78	1.8	4.5	60	19	78	44	78	1.8	79	78	1.7	31.976	-H140	071-32	70
42	82	3.2	4.3	63	18	82	42	82	3.2				33.564	-H320	071-32	76
40	85	2.5	4.1	66	17	85	40	85	2.5	72	85	2.4	35.095	-H210	071-32	73
40	86	1.6	4.1	66	17	86	40	86	1.6	71	86	1.6	35.308	-H140	071-32	70
40	87	3.2	4.1	67	17	87	40	87	3.2				35.689	-H450	071-32	79
39	89	1.1	4.0	68	17	88	39	89	1.1	69	88	1.1	36.422	-H100	071-32	67
37	93	2.7	3.8	72	16	93	37	93	2.7	66	93	2.6	38.238	-H320	071-32	76
36	96	2.2	3.7	74	15	95	36	96	2.2	64	95	2.1	39.286	-H210	071-32	73
35	97	1.0	3.6	75	15	97	35	97	1.0				39.857	-H100	071-32	67
35	98	3.2	3.6	76	15	98	35	98	3.2				40.333	-H450	071-32	79
35	99	1.4	3.6	76	15	98	35	99	1.4	62	98	1.4	40.526	-H140	071-32	70
33	104	1.8	3.4	80	14	103	33	104	1.8	59	103	1.8	42.593	-H210	071-32	73
33	105	2.8	3.3	81	14	105	33	105	2.8	58	105	2.8	43.313	-H450	071-32	79
33	106	2.7	3.3	81	14	105	33	106	2.7	58	105	2.7	43.436	-H320	071-32	76
32	109	1.3	3.2	84	13	109	32	109	1.3	56	109	1.3	44.748	-H140	071-32	70
30	113	1.9	3.1	87	13	113	30	113	1.9	54	113	1.9	46.407	-H320	071-32	76
30	116	1.8	3.0	89	13	116	30	116	1.8	53	116	1.8	47.679	-H210	071-32	73
29	119	2.8	3.0	92	12	119	29	119	2.8	52	119	2.8	48.950	-H450	071-32	79
28	123	1.1	2.9	95	12	123	28	123	1.1	50	123	1.1	50.786	-H140	071-32	70
27	128	1.9	2.8	99	11	128	27	128	1.9	48	128	1.9	52.715	-H320	071-32	76
26	132	1.0	2.7	102	11	132	26	132	1.0	46	132	1.0	54.438	-H210	071-32	73
26	133	2.1	2.6	103	11	133	26	133	2.1	46	133	2.1	54.750	-H450	071-32	79
25	136	1.0	2.6	105	11	136	25	136	1.0	45	136	1.0	56.077	-H140	071-32	70
23	148	1.1	2.4	114	9.8	148	23	148	1.1	41	148	1.1	60.938	-H210	071-32	73
23	150	2.0	2.3	116	9.7	150	23	150	2.0	41	150	2.0	61.875	-H450	071-32	79

3-stage gearboxes

Netzbetrieb 400 V, 50 Hz			Umrichterbetrieb 5 Hz -		- 20 Hz		- 50 Hz (1:10)			- 87 Hz (1:17.4)			i	Produkt		
n_2 [r/min]	M_2 [Nm]	c	n_{22} [r/min]	M_{22} [Nm]	n_{21} [r/min]	M_2 [Nm]	n_2 [r/min]	M_2 [Nm]	c	n_2 [r/min]	M_2 [Nm]	c		g500	MD□MA□□	
33	104	2.0	3.3	80	14	104	33	104	2.0	58	104	1.7	43.390	-H210	071-32	73
30	113	2.8	3.1	87	13	113	30	113	2.8	53	113	2.7	47.276	-H320	071-32	76
29	116	1.8	3.0	90	12	116	29	116	1.8	52	116	1.7	48.571	-H210	071-32	73
26	129	2.5	2.7	99	11	128	26	129	2.5	47	128	2.4	53.703	-H320	071-32	76



Selection tables, 4-pole motors

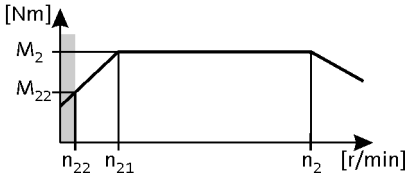

50 Hz: P_N = 0.37 kW
87 Hz: P_N = 0.66 kW

3-stage gearboxes

Netzbetrieb 400 V, 50 Hz			Umrichterbetrieb 5 Hz -		- 20 Hz		- 50 Hz (1:10)			- 87 Hz (1:17.4)			i	Produkt		
n_2 [r/min]	M_2 [Nm]	c	n_{22} [r/min]	M_{22} [Nm]	n_{21} [r/min]	M_2 [Nm]	n_2 [r/min]	M_2 [Nm]	c	n_2 [r/min]	M_2 [Nm]	c		g500	MD□MA□□	
25	133	1.6	2.6	102	11	133	25	133	1.6	45	133	1.5	55.529	-H210	071-32	73
23	145	2.2	2.4	112	9.9	145	23	145	2.2	42	145	2.1	60.502	-H320	071-32	76
23	148	3.0	2.3	114	9.7	148	23	148	3.0	41	148	2.9	61.774	-H450	071-32	79
23	149	1.4	2.3	115	9.7	149	23	149	1.4	41	149	1.4	62.160	-H210	071-32	73
21	165	1.9	2.1	127	8.7	164	21	165	1.9	37	164	1.9	68.726	-H320	071-32	76
20	167	2.7	2.1	129	8.6	167	20	167	2.7	36	167	2.6	69.813	-H450	071-32	79
20	170	1.2	2.0	131	8.4	170	20	170	1.2	36	170	1.2	71.026	-H210	071-32	73
18	185	1.7	1.9	143	7.8	185	18	185	1.7	33	185	1.7	77.387	-H320	071-32	76
18	189	2.4	1.8	145	7.6	188	18	189	2.4	32	188	2.3	78.794	-H450	071-32	79
18	190	1.1	1.8	147	7.5	190	18	190	1.1	32	190	1.1	79.507	-H210	071-32	73
16	211	1.5	1.6	162	6.8	210	16	211	1.5	29	210	1.5	87.906	-H320	071-32	76
16	213	2.1	1.6	164	6.7	213	16	213	2.1	28	213	2.1	89.048	-H450	071-32	79
15	231	2.0	1.5	178	6.2	231	15	231	2.0	26	231	2.0	96.522	-H450	071-32	79
14	241	1.3	1.4	185	6.0	240	14	241	1.3	25	240	1.3	100.462	-H320	071-32	76
13	261	1.7	1.3	201	5.5	261	13	261	1.7	23	261	1.7	109.083	-H450	071-32	79
12	273	1.2	1.3	210	5.3	273	12	273	1.2	22	273	1.2	114.118	-H320	071-32	76
12	291	1.6	1.2	224	4.9	290	12	291	1.6	21	290	1.6	121.342	-H450	071-32	79
11	308	1.0	1.1	237	4.7	308	11	308	1.0	20	308	1.0	128.743	-H320	071-32	76
10	328	1.4	1.1	253	4.4	328	10	328	1.4	18	328	1.4	137.133	-H450	071-32	79
9.0	374	1.2	0.9	288	3.8	374	9.0	374	1.2	16	374	1.2	156.274	-H450	071-32	79
8.0	423	1.1	0.8	326	3.4	422	8.0	423	1.1	14	422	1.1	176.611	-H450	071-32	79



Selection tables, 4-pole motors

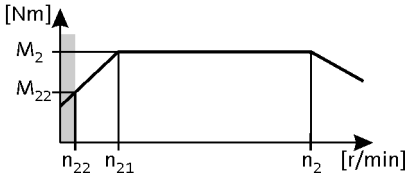

50 Hz: P_N = 0.55 kW
87 Hz: P_N = 1.0 kW

2-stage gearboxes

Netzbetrieb 400 V, 50 Hz			Umrichterbetrieb 5 Hz -		- 20 Hz		- 50 Hz (1:10)			- 87 Hz (1:17.4)			i	Produkt		
n_2 [r/min]	M_2 [Nm]	c	n_{22} [r/min]	M_{22} [Nm]	n_{21} [r/min]	M_2 [Nm]	n_2 [r/min]	M_2 [Nm]	c	n_2 [r/min]	M_2 [Nm]	c		g500	MD□MA□□	
541	9.0	1.9	56	7.3	231	10	541	9.0	1.9	968	10	1.6	2.597	-H45	071-42	64
430	12	4.5	44	9.1	184	12	430	12	4.5				3.267	-H140	071-42	70
419	12	4.5	43	9.4	179	12	419	12	4.5				3.354	-H100	071-42	67
412	12	1.5	43	9.5	176	12	412	12	1.5	737	13	1.3	3.413	-H45	071-42	64
322	16	1.3	33	12	137	16	322	16	1.3	576	16	1.1	4.368	-H45	071-42	64
305	17	4.3	32	13	130	17	305	17	4.3				4.600	-H100	071-42	67
272	19	4.0	28	14	116	19	272	19	4.0				5.167	-H100	071-42	67
265	19	1.4	27	15	113	19	265	19	1.4	473	20	1.2	5.312	-H45	071-42	64
239	21	3.8	25	16	102	21	239	21	3.8				5.887	-H100	071-42	67
236	22	1.3	24	17	101	22	236	22	1.3	422	22	1.1	5.965	-H45	071-42	64
218	23	3.6	23	18	93	23	218	23	3.6				6.440	-H100	071-42	67
201	25	1.2	21	20	86	25	201	25	1.2				6.982	-H45	071-42	64
198	26	3.4	21	20	85	26	198	26	3.4				7.086	-H100	071-42	67
179	28	1.1	19	22	77	28	179	28	1.1				7.840	-H45	071-42	64
171	30	3.1	18	23	73	30	171	30	3.1	306	30	2.6	8.214	-H100	071-42	67
157	32	1.0	16	25	67	32	157	32	1.0				8.935	-H45	071-42	64
155	33	2.9	16	25	66	33	155	33	2.9	277	33	2.4	9.068	-H100	071-42	67
140	36	2.7	14	28	60	36	140	36	2.7	250	37	2.3	10.063	-H100	071-42	67
124	41	2.4	13	32	53	41	124	41	2.4	221	42	2.0	11.360	-H100	071-42	67
122	42	3.1	13	32	52	42	122	42	3.1	218	43	2.5	11.554	-H140	071-42	70
111	46	2.9	12	35	48	46	111	46	2.9	199	47	2.4	12.640	-H140	071-42	70
111	46	2.2	12	35	47	46	111	46	2.2	199	47	1.8	12.653	-H100	071-42	67
101	51	2.7	10	39	43	51	101	51	2.7	180	51	2.2	13.957	-H140	071-42	70
97	53	1.9	10	41	41	53	97	53	1.9	174	53	1.6	14.490	-H100	071-42	67
91	56	1.8	9.4	43	39	56	91	56	1.8	162	57	1.5	15.500	-H100	071-42	67
87	58	2.4	9.0	45	37	58	87	58	2.4	156	59	2.0	16.122	-H140	071-42	70
79	64	1.6	8.2	50	34	64	79	64	1.6	142	65	1.3	17.750	-H100	071-42	67
79	65	2.2	8.1	50	34	65	79	65	2.2	141	66	1.8	17.802	-H140	071-42	70
75	68	3.1	7.7	52	32	68	75	68	3.1	134	69	2.6	18.750	-H210	071-42	73
72	71	1.4	7.4	54	31	71	72	71	1.4	129	72	1.2	19.486	-H100	071-42	67
71	72	2.0	7.3	55	30	72	71	72	2.0	127	73	1.6	19.750	-H140	071-42	70
64	79	2.7	6.7	61	28	79	64	79	2.7	115	80	2.2	21.802	-H210	071-42	73
64	79	1.8	6.6	61	28	79	64	79	1.8	115	80	1.5	21.808	-H140	071-42	70
63	81	1.2	6.5	62	27	81	63	81	1.2	113	82	1.0	22.314	-H100	071-42	67
58	89	2.4	5.9	68	25	89	58	89	2.4	103	90	2.0	24.405	-H210	071-42	73



Selection tables, 4-pole motors

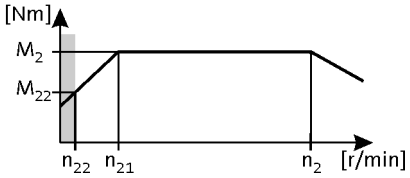

50 Hz: P_N = 0.55 kW
87 Hz: P_N = 1.0 kW

2-stage gearboxes

Netzbetrieb 400 V, 50 Hz			Umrichterbetrieb 5 Hz -		- 20 Hz		- 50 Hz (1:10)			- 87 Hz (1:17.4)			i	Produkt		
n_2 [r/min]	M_2 [Nm]	c	n_{22} [r/min]	M_{22} [Nm]	n_{21} [r/min]	M_2 [Nm]	n_2 [r/min]	M_2 [Nm]	c	n_2 [r/min]	M_2 [Nm]	c		g500	MD□MA□□	
57	90	1.6	5.8	69	24	90	57	90	1.6	101	91	1.3	24.829	-H140	071-42	70
56	91	1.1	5.8	70	24	91	56	91	1.1				25.095	-H100	071-42	67
52	98	2.1	5.3	76	22	100	52	98	2.1	93	100	2.0	27.119	-H210	071-42	73
51	99	1.4	5.3	77	22	101	51	99	1.4	92	101	1.3	27.415	-H140	071-42	70
51	100	3.2	5.3	77	22	100	51	100	3.2	91	102	3.0	27.578	-H450	071-42	79
48	107	2.9	4.9	83	20	107	48	107	2.9	85	109	2.7	29.548	-H320	071-42	76
46	110	1.9	4.8	85	20	110	46	110	1.9	83	112	1.8	30.357	-H210	071-42	73
45	113	3.2	4.7	87	19	113	45	113	3.2	81	115	3.0	31.167	-H450	071-42	79
44	116	1.2	4.5	89	19	116	44	116	1.2	79	118	1.1	31.976	-H140	071-42	70
42	122	2.6	4.3	94	18	122	42	122	2.6	75	124	2.5	33.564	-H320	071-42	76
40	127	1.7	4.1	98	17	127	40	127	1.7	72	129	1.6	35.095	-H210	071-42	73
40	128	1.1	4.1	99	17	128	40	128	1.1	71	130	1.0	35.308	-H140	071-42	70
39	129	2.9	4.1	100	17	129	39	129	2.9	71	131	2.7	35.689	-H450	071-42	79
37	139	1.8	3.8	107	16	139	37	139	1.8	66	141	1.7	38.238	-H320	071-42	76
36	142	1.5	3.7	110	15	142	36	142	1.5	64	145	1.4	39.286	-H210	071-42	73
35	146	2.9	3.6	113	15	146	35	146	2.9	62	149	2.8	40.333	-H450	071-42	79
33	154	1.2	3.4	119	14	154	33	154	1.2	59	157	1.2	42.593	-H210	071-42	73
32	157	2.1	3.3	121	14	157	32	157	2.1	58	160	2.0	43.313	-H450	071-42	79
32	158	1.8	3.3	121	14	158	32	158	1.8	58	160	1.8	43.436	-H320	071-42	76
30	168	1.3	3.1	130	13	168	30	168	1.3	54	171	1.3	46.407	-H320	071-42	76
30	173	1.2	3.0	133	13	173	30	173	1.2	53	176	1.2	47.679	-H210	071-42	73
29	178	2.1	3.0	137	12	178	29	178	2.1	51	180	2.0	48.950	-H450	071-42	79
27	191	1.3	2.8	147	11	191	27	191	1.3	48	194	1.3	52.715	-H320	071-42	76
26	199	1.4	2.6	153	11	199	26	199	1.4	46	202	1.3	54.750	-H450	071-42	79
23	224	1.4	2.3	173	9.7	224	23	224	1.4	41	228	1.3	61.875	-H450	071-42	79

6.3

3-stage gearboxes

Netzbetrieb 400 V, 50 Hz			Umrichterbetrieb 5 Hz -		- 20 Hz		- 50 Hz (1:10)			- 87 Hz (1:17.4)			i	Produkt		
n_2 [r/min]	M_2 [Nm]	c	n_{22} [r/min]	M_{22} [Nm]	n_{21} [r/min]	M_2 [Nm]	n_2 [r/min]	M_2 [Nm]	c	n_2 [r/min]	M_2 [Nm]	c		g500	MD□MA□□	
32	155	1.4	3.3	119	14	155	32	155	1.4	58	157	1.1	43.390	-H210	071-42	73
32	158	2.9	3.3	121	14	158	32	158	2.9	57	160	2.4	44.124	-H450	071-42	79
30	169	1.9	3.1	130	13	169	30	169	1.9	53	172	1.8	47.276	-H320	071-42	76
29	174	1.2	3.0	134	12	174	29	174	1.2	52	176	1.1	48.571	-H210	071-42	73
28	178	2.5	2.9	137	12	178	28	178	2.5	50	181	2.4	49.867	-H450	071-42	79
26	192	1.7	2.7	148	11	192	26	192	1.7	47	195	1.6	53.703	-H320	071-42	76
25	198	1.1	2.6	153	11	198	25	198	1.1	45	201	1.0	55.529	-H210	071-42	73
25	202	2.2	2.6	155	11	202	25	202	2.2	45	205	2.1	56.469	-H450	071-42	79
23	216	1.5	2.4	166	9.9	216	23	216	1.5	42	220	1.4	60.502	-H320	071-42	76
23	221	2.0	2.3	170	9.7	221	23	221	2.0	41	224	1.9	61.774	-H450	071-42	79



Selection tables, 4-pole motors

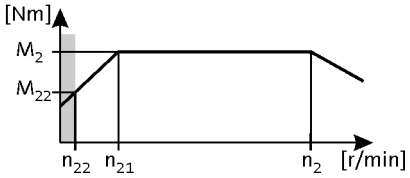

50 Hz: P_N = 0.55 kW
87 Hz: P_N = 1.0 kW

3-stage gearboxes

Netzbetrieb 400 V, 50 Hz			Umrichterbetrieb 5 Hz -		- 20 Hz		- 50 Hz (1:10)			- 87 Hz (1:17.4)			i	Produkt		
n_2 [r/min]	M_2 [Nm]	c	n_{22} [r/min]	M_{22} [Nm]	n_{21} [r/min]	M_2 [Nm]	n_2 [r/min]	M_2 [Nm]	c	n_2 [r/min]	M_2 [Nm]	c		g500	MD□MA□□	
20	246	1.3	2.1	189	8.7	246	20	246	1.3	37	249	1.2	68.726	-H320	071-42	76
20	249	1.8	2.1	192	8.6	249	20	249	1.8	36	253	1.7	69.813	-H450	071-42	79
18	276	1.2	1.9	213	7.8	276	18	276	1.2	33	281	1.1	77.387	-H320	071-42	76
18	281	1.6	1.8	217	7.6	281	18	281	1.6	32	286	1.5	78.794	-H450	071-42	79
16	314	1.0	1.6	242	6.8	314	16	314	1.0	29	319	1.0	87.906	-H320	071-42	76
16	318	1.4	1.6	245	6.7	318	16	318	1.4	28	323	1.4	89.048	-H450	071-42	79
15	345	1.3	1.5	266	6.2	345	15	345	1.3	26	350	1.3	96.522	-H450	071-42	79
13	390	1.2	1.3	300	5.5	390	13	390	1.2	23	396	1.1	109.083	-H450	071-42	79
12	433	1.0	1.2	334	4.9	433	12	433	1.0	21	440	1.0	121.342	-H450	071-42	79



Selection tables, 4-pole motors

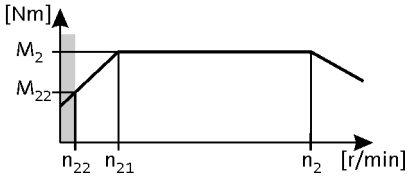

50 Hz: P_N = 0.75 kW
87 Hz: P_N = 1.35 kW

2-stage gearboxes

Netzbetrieb 400 V, 50 Hz			Umrichterbetrieb 5 Hz -		- 20 Hz		- 50 Hz (1:10)			- 87 Hz (1:17.4)			i	Produkt		
n_2 [r/min]	M_2 [Nm]	c	n_{22} [r/min]	M_{22} [Nm]	n_{21} [r/min]	M_2 [Nm]	n_2 [r/min]	M_2 [Nm]	c	n_2 [r/min]	M_2 [Nm]	c		g500	MH□MA□□	
432	16	4.2	44	12	184	16	432	16	4.2				3.267	-H140	080-32	70
420	17	3.8	43	13	179	17	420	17	3.8				3.354	-H100	080-32	67
307	23	3.2	32	18	130	23	307	23	3.2	548	23	2.7	4.600	-H100	080-32	67
273	25	3.0	28	20	116	25	273	25	3.0	488	26	2.5	5.167	-H100	080-32	67
240	29	2.8	25	22	102	29	240	29	2.8	428	29	2.3	5.887	-H100	080-32	67
219	32	2.6	23	24	93	32	219	32	2.6	391	32	2.2	6.440	-H100	080-32	67
199	35	2.5	21	27	85	35	199	35	2.5	356	35	2.1	7.086	-H100	080-32	67
194	36	3.0	20	28	83	36	194	36	3.0	347	36	2.5	7.269	-H140	080-32	70
176	39	3.0	18	30	75	39	176	39	3.0	315	40	2.5	8.000	-H140	080-32	70
172	40	2.3	18	31	73	40	172	40	2.3	307	41	1.9	8.214	-H100	080-32	67
156	44	2.6	16	34	67	44	156	44	2.6	279	45	2.2	9.029	-H140	080-32	70
156	45	2.2	16	34	66	45	156	45	2.2	278	45	1.8	9.068	-H100	080-32	67
144	48	2.6	15	37	61	48	144	48	2.6	257	49	2.2	9.800	-H140	080-32	70
140	50	2.0	14	38	60	50	140	50	2.0	250	50	1.7	10.063	-H100	080-32	67
124	56	1.8	13	43	53	56	124	56	1.8	222	56	1.5	11.360	-H100	080-32	67
122	57	2.3	13	44	52	57	122	57	2.3	218	57	1.9	11.554	-H140	080-32	70
118	59	3.2	12	46	50	59	118	59	3.2	210	60	2.6	12.000	-H210	080-32	73
112	62	2.1	12	48	48	62	112	62	2.1	199	63	1.8	12.640	-H140	080-32	70
111	62	1.6	12	48	47	62	111	62	1.6	199	63	1.3	12.653	-H100	080-32	67
103	67	3.0	11	52	44	67	103	67	3.0	184	68	2.5	13.673	-H210	080-32	73
101	69	2.0	10	53	43	69	101	69	2.0	181	69	1.7	13.957	-H140	080-32	70
97	71	1.4	10	55	41	71	97	71	1.4	174	72	1.2	14.490	-H100	080-32	67
92	75	2.7	9.5	58	39	75	92	75	2.7	165	76	2.2	15.306	-H210	080-32	73
91	76	1.3	9.4	59	39	76	91	76	1.3	163	77	1.1	15.500	-H100	080-32	67
88	79	1.8	9.0	61	37	79	88	79	1.8	156	80	1.5	16.122	-H140	080-32	70
84	83	2.5	8.7	64	36	83	84	83	2.5	150	83	2.1	16.750	-H210	080-32	73
79	87	1.1	8.2	67	34	87	79	87	1.1				17.750	-H100	080-32	67
79	88	1.6	8.1	68	34	88	79	88	1.6	142	88	1.3	17.802	-H140	080-32	70
75	92	2.3	7.7	71	32	92	75	92	2.3	134	93	1.9	18.750	-H210	080-32	73
72	96	1.0	7.4	74	31	96	72	96	1.0				19.486	-H100	080-32	67
71	97	1.4	7.3	75	30	97	71	97	1.4	128	98	1.2	19.750	-H140	080-32	70
68	102	2.9	7.0	79	29	102	68	102	2.9	122	103	2.5	20.731	-H320	080-32	76
65	107	2.0	6.7	83	28	107	65	107	2.0	116	108	1.6	21.802	-H210	080-32	73
65	107	1.3	6.6	83	28	107	65	107	1.3	116	108	1.1	21.808	-H140	080-32	70
59	117	2.7	6.1	90	25	117	59	117	2.7	106	118	2.3	23.754	-H320	080-32	76



Selection tables, 4-pole motors

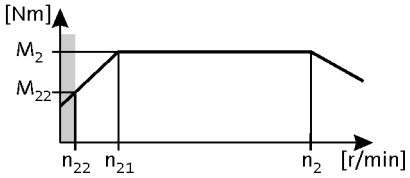

50 Hz: P_N = 0.75 kW
87 Hz: P_N = 1.35 kW

2-stage gearboxes

Netzbetrieb 400 V, 50 Hz			Umrichterbetrieb 5 Hz -		- 20 Hz		- 50 Hz (1:10)			- 87 Hz (1:17.4)			i	Produkt		
n_2 [r/min]	M_2 [Nm]	c	n_{22} [r/min]	M_{22} [Nm]	n_{21} [r/min]	M_2 [Nm]	n_2 [r/min]	M_2 [Nm]	c	n_2 [r/min]	M_2 [Nm]	c		g500	MH□MA□□	
58	120	1.8	5.9	93	25	120	58	120	1.8	103	121	1.5	24.405	-H210	080-32	73
57	122	1.1	5.8	94	24	122	57	122	1.1				24.829	-H140	080-32	70
52	133	2.4	5.4	102	22	133	52	133	2.4	93	134	2.3	26.983	-H320	080-32	76
52	134	1.6	5.3	103	22	134	52	134	1.6	93	135	1.5	27.119	-H210	080-32	73
51	135	1.0	5.3	104	22	135	51	135	1.0				27.415	-H140	080-32	70
51	136	2.9	5.3	105	22	136	51	136	2.9				27.578	-H450	080-32	79
48	146	2.2	4.9	112	20	146	48	146	2.2	85	147	2.1	29.548	-H320	080-32	76
46	150	1.4	4.8	115	20	150	46	150	1.4	83	151	1.3	30.357	-H210	080-32	73
45	154	2.9	4.7	118	19	154	45	154	2.9	81	155	2.8	31.167	-H450	080-32	79
42	165	1.9	4.3	127	18	165	42	165	1.9	75	167	1.8	33.564	-H320	080-32	76
40	173	1.2	4.1	133	17	173	40	173	1.2	72	174	1.2	35.095	-H210	080-32	73
40	176	2.6	4.1	135	17	176	40	176	2.6	71	177	2.4	35.689	-H450	080-32	79
37	188	1.3	3.8	145	16	188	37	188	1.3	66	190	1.3	38.238	-H320	080-32	76
36	194	1.1	3.7	149	15	194	36	194	1.1	64	195	1.0	39.286	-H210	080-32	73
35	199	2.3	3.6	153	15	199	35	199	2.3	63	200	2.3	40.333	-H450	080-32	79
33	213	1.5	3.3	164	14	213	33	213	1.5	58	215	1.5	43.313	-H450	080-32	79
33	214	1.3	3.3	165	14	214	33	214	1.3	58	216	1.3	43.436	-H320	080-32	76
29	241	1.5	3.0	186	12	241	29	241	1.5	52	243	1.5	48.950	-H450	080-32	79
26	270	1.0	2.6	208	11	270	26	270	1.0	46	272	1.0	54.750	-H450	080-32	79
23	305	1.0	2.3	235	9.7	305	23	305	1.0	41	307	1.0	61.875	-H450	080-32	79

3-stage gearboxes

Netzbetrieb 400 V, 50 Hz			Umrichterbetrieb 5 Hz -		- 20 Hz		- 50 Hz (1:10)			- 87 Hz (1:17.4)			i	Produkt		
n_2 [r/min]	M_2 [Nm]	c	n_{22} [r/min]	M_{22} [Nm]	n_{21} [r/min]	M_2 [Nm]	n_2 [r/min]	M_2 [Nm]	c	n_2 [r/min]	M_2 [Nm]	c		g500	MH□MA□□	
33	211	1.0	3.3	162	14	211	33	211	1.0				43.390	-H210	080-32	73
32	214	2.1	3.3	165	14	214	32	214	2.1	57	216	1.8	44.124	-H450	080-32	79
30	229	1.4	3.1	177	13	229	30	229	1.4	53	231	1.3	47.276	-H320	080-32	76
28	242	1.9	2.9	186	12	242	28	242	1.9	51	244	1.8	49.867	-H450	080-32	79
26	261	1.2	2.7	201	11	261	26	261	1.2	47	263	1.2	53.703	-H320	080-32	76
25	274	1.6	2.6	211	11	274	25	274	1.6	45	276	1.6	56.469	-H450	080-32	79
23	294	1.1	2.4	226	9.9	294	23	294	1.1	42	296	1.0	60.502	-H320	080-32	76
23	300	1.5	2.3	231	9.7	300	23	300	1.5	41	302	1.4	61.774	-H450	080-32	79
20	339	1.3	2.1	261	8.6	339	20	339	1.3	36	341	1.3	69.813	-H450	080-32	79
18	382	1.2	1.8	294	7.6	382	18	382	1.2	32	385	1.1	78.794	-H450	080-32	79
16	432	1.0	1.6	333	6.7	432	16	432	1.0	28	435	1.0	89.048	-H450	080-32	79



Selection tables, 4-pole motors

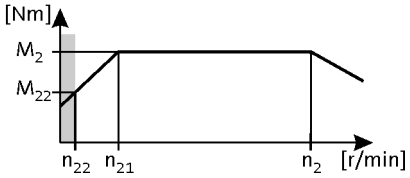

50 Hz: P_N = 1.1 kW
87 Hz: P_N = 2.0 kW

2-stage gearboxes

Netzbetrieb 400 V, 50 Hz			Umrichterbetrieb 5 Hz -		- 20 Hz		- 50 Hz (1:10)			- 87 Hz (1:17.4)			i	Produkt		
n_2 [r/min]	M_2 [Nm]	c	n_{22} [r/min]	M_{22} [Nm]	n_{21} [r/min]	M_2 [Nm]	n_2 [r/min]	M_2 [Nm]	c	n_2 [r/min]	M_2 [Nm]	c		g500	MH□MA□□	
438	23	3.5	44	16	184	23	438	23	3.5	778	24	2.9	3.267	-H140	090-12	70
426	24	2.6	43	17	179	24	426	24	2.6	757	24	2.1	3.354	-H100	090-12	67
319	32	2.9	32	22	134	32	319	32	2.9	567	33	2.4	4.480	-H140	090-12	70
311	33	2.2	32	23	130	33	311	33	2.2	552	34	1.8	4.600	-H100	090-12	67
277	37	2.0	28	26	116	37	277	37	2.0	492	38	1.7	5.167	-H100	090-12	67
249	41	2.5	25	29	105	41	249	41	2.5	443	42	2.1	5.733	-H140	090-12	70
243	42	1.9	25	29	102	42	243	42	1.9	432	43	1.6	5.887	-H100	090-12	67
228	45	2.4	23	31	96	45	228	45	2.4	405	46	1.9	6.272	-H140	090-12	70
222	46	1.8	23	32	93	46	222	46	1.8	394	47	1.5	6.440	-H100	090-12	67
202	50	1.7	21	35	85	50	202	50	1.7	359	52	1.4	7.086	-H100	090-12	67
197	52	2.1	20	36	83	52	197	52	2.1	349	53	1.7	7.269	-H140	090-12	70
187	55	3.2	19	38	78	55	187	55	3.2	332	56	2.6	7.657	-H210	090-12	73
179	57	2.1	18	40	75	57	179	57	2.1	318	58	1.7	8.000	-H140	090-12	70
174	59	1.6	18	41	73	59	174	59	1.6	309	60	1.3	8.214	-H100	090-12	67
167	61	2.8	17	43	70	61	167	61	2.8	296	63	2.3	8.571	-H210	090-12	73
158	64	1.8	16	45	67	64	158	64	1.8	281	66	1.5	9.029	-H140	090-12	70
158	65	1.5	16	45	66	65	158	65	1.5	280	66	1.2	9.068	-H100	090-12	67
146	70	2.6	15	49	61	70	146	70	2.6	259	71	2.1	9.799	-H210	090-12	73
146	70	1.8	15	49	61	70	146	70	1.8	259	71	1.5	9.800	-H140	090-12	70
142	72	1.4	14	50	60	72	142	72	1.4	252	73	1.1	10.063	-H100	090-12	67
133	76	2.5	14	54	56	76	133	76	2.5	237	78	2.0	10.720	-H210	090-12	73
126	81	1.2	13	57	53	81	126	81	1.2	224	83	1.0	11.360	-H100	090-12	67
124	82	1.6	13	58	52	82	124	82	1.6	220	84	1.3	11.554	-H140	090-12	70
119	86	2.2	12	60	50	86	119	86	2.2	212	88	1.8	12.000	-H210	090-12	73
118	86	2.9	12	61	50	86	118	86	2.9	209	88	2.4	12.128	-H320	090-12	76
113	90	1.5	12	63	48	90	113	90	1.5	201	92	1.2	12.640	-H140	090-12	70
113	90	1.1	12	63	47	90	113	90	1.1				12.653	-H100	090-12	67
108	95	2.8	11	66	45	95	108	95	2.8	191	97	2.3	13.268	-H320	090-12	76
105	97	2.1	11	68	44	100	105	97	2.1	186	100	1.7	13.673	-H210	090-12	73
103	99	1.4	10	70	43	102	103	99	1.4	182	102	1.1	13.957	-H140	090-12	70
96	106	2.8	9.7	74	40	106	96	106	2.8	171	109	2.3	14.898	-H320	090-12	76
93	109	1.8	9.5	76	39	109	93	109	1.8	166	112	1.5	15.306	-H210	090-12	73
89	115	1.2	9.0	80	37	115	89	115	1.2	158	118	1.0	16.122	-H140	090-12	70
85	119	1.8	8.7	84	36	119	85	119	1.8	152	122	1.4	16.750	-H210	090-12	73
85	121	2.3	8.6	84	36	121	85	121	2.3	150	123	1.9	16.923	-H320	090-12	76



Selection tables, 4-pole motors

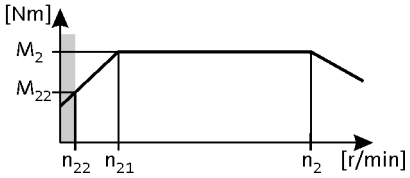

50 Hz: P_N = 1.1 kW
87 Hz: P_N = 2.0 kW

2-stage gearboxes

Netzbetrieb 400 V, 50 Hz			Umrichterbetrieb 5 Hz -		- 20 Hz		- 50 Hz (1:10)			- 87 Hz (1:17.4)			i	Produkt		
n_2 [r/min]	M_2 [Nm]	c	n_{22} [r/min]	M_{22} [Nm]	n_{21} [r/min]	M_2 [Nm]	n_2 [r/min]	M_2 [Nm]	c	n_2 [r/min]	M_2 [Nm]	c		g500	MH□MA□□	
80	127	1.1	8.1	89	34	127	80	127	1.1				17.802	-H140	090-12	70
78	130	2.4	7.9	91	33	130	78	130	2.4	139	133	2.0	18.250	-H320	090-12	76
76	134	1.6	7.7	94	32	134	76	134	1.6	136	137	1.3	18.750	-H210	090-12	73
69	148	2.0	7.0	103	29	148	69	148	2.0	123	151	1.7	20.731	-H320	090-12	76
66	155	1.4	6.7	109	28	155	66	155	1.4	117	159	1.1	21.802	-H210	090-12	73
65	158	2.9	6.5	111	27	158	65	158	2.9	115	162	2.3	22.170	-H450	090-12	79
60	169	1.9	6.1	119	25	169	60	169	1.9	107	173	1.6	23.754	-H320	090-12	76
59	174	1.2	5.9	122	25	174	59	174	1.2				24.405	-H210	090-12	73
57	179	2.5	5.8	125	24	179	57	179	2.5	101	183	2.1	25.056	-H450	090-12	79
53	192	1.7	5.4	135	22	192	53	192	1.7	94	197	1.6	26.983	-H320	090-12	76
53	193	1.1	5.3	135	22	193	53	193	1.1	94	198	1.0	27.119	-H210	090-12	73
52	197	2.3	5.3	138	22	197	52	197	2.3	92	201	2.1	27.578	-H450	090-12	79
48	211	1.5	4.9	147	20	211	48	211	1.5	86	216	1.4	29.548	-H320	090-12	76
46	222	2.0	4.7	156	19	222	46	222	2.0	82	227	1.9	31.167	-H450	090-12	79
43	239	1.3	4.3	168	18	239	43	239	1.3	76	245	1.3	33.564	-H320	090-12	76
40	254	1.8	4.1	178	17	254	40	254	1.8	71	260	1.7	35.689	-H450	090-12	79
36	287	1.6	3.6	201	15	287	36	287	1.6	63	294	1.5	40.333	-H450	090-12	79
33	309	1.0	3.3	216	14	309	33	309	1.0	59	316	1.0	43.313	-H450	090-12	79
29	349	1.1	3.0	244	12	349	29	349	1.1	52	357	1.0	48.950	-H450	090-12	79

3-stage gearboxes

Netzbetrieb 400 V, 50 Hz			Umrichterbetrieb 5 Hz -		- 20 Hz		- 50 Hz (1:10)			- 87 Hz (1:17.4)			i	Produkt		
n_2 [r/min]	M_2 [Nm]	c	n_{22} [r/min]	M_{22} [Nm]	n_{21} [r/min]	M_2 [Nm]	n_2 [r/min]	M_2 [Nm]	c	n_2 [r/min]	M_2 [Nm]	c		g500	MH□MA□□	
32	310	1.5	3.3	217	14	310	32	310	1.5	58	317	1.2	44.124	-H450	090-12	79
29	350	1.3	2.9	245	12	350	29	350	1.3	51	358	1.2	49.867	-H450	090-12	79
25	396	1.1	2.6	278	11	396	25	396	1.1	45	406	1.1	56.469	-H450	090-12	79
23	434	1.0	2.3	304	9.7	434	23	434	1.0				61.774	-H450	090-12	79



Selection tables, 4-pole motors

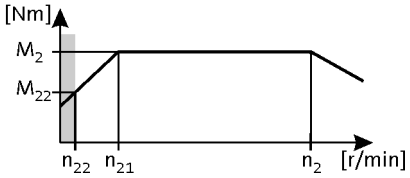

50 Hz: P_N = 1.5 kW
87 Hz: P_N = 2.7 kW

2-stage gearboxes

Netzbetrieb 400 V, 50 Hz			Umrichterbetrieb 5 Hz -		- 20 Hz		- 50 Hz (1:10)			- 87 Hz (1:17.4)			i	Produkt		
n_2 [r/min]	M_2 [Nm]	c	n_{22} [r/min]	M_{22} [Nm]	n_{21} [r/min]	M_2 [Nm]	n_2 [r/min]	M_2 [Nm]	c	n_2 [r/min]	M_2 [Nm]	c		g500	MH□MA□□	
439	32	2.6	44	22	184	32	439	32	2.6	779	32	2.1	3.267	-H140	090-32	70
428	32	1.9	43	23	179	32	428	32	1.9	759	33	1.6	3.354	-H100	090-32	67
320	43	2.2	32	30	134	43	320	43	2.2	568	44	1.8	4.480	-H140	090-32	70
312	45	1.6	32	31	130	45	312	45	1.6	553	45	1.3	4.600	-H100	090-32	67
309	45	3.2	31	32	129	45	309	45	3.2	548	46	2.6	4.648	-H210	090-32	73
278	50	1.5	28	35	116	50	278	50	1.5				5.167	-H100	090-32	67
257	54	2.9	26	38	108	54	257	54	2.9	456	55	2.4	5.583	-H210	090-32	73
250	56	1.9	25	39	105	56	250	56	1.9	444	56	1.5	5.733	-H140	090-32	70
244	57	1.4	25	40	102	57	244	57	1.4	432	58	1.2	5.887	-H100	090-32	67
230	61	2.6	23	42	96	61	230	61	2.6				6.250	-H210	090-32	73
229	61	1.7	23	43	96	61	229	61	1.7	406	62	1.4	6.272	-H140	090-32	70
223	62	1.3	23	44	93	62	223	62	1.3	395	63	1.1	6.440	-H100	090-32	67
203	69	1.3	21	48	85	69	203	69	1.3	359	70	1.0	7.086	-H100	090-32	67
197	70	1.5	20	49	83	70	197	70	1.5				7.269	-H140	090-32	70
187	74	2.3	19	52	78	74	187	74	2.3	332	75	1.9	7.657	-H210	090-32	73
179	77	1.5	18	54	75	77	179	77	1.5	318	79	1.3	8.000	-H140	090-32	70
175	80	1.2	18	56	73	80	175	80	1.2				8.214	-H100	090-32	67
172	81	3.1	17	57	72	81	172	81	3.1	305	82	2.6	8.343	-H320	090-32	76
167	83	2.1	17	58	70	83	167	83	2.1	297	84	1.7	8.571	-H210	090-32	73
159	87	1.3	16	61	67	87	159	87	1.3	282	89	1.1	9.029	-H140	090-32	70
158	88	1.1	16	62	66	88	158	88	1.1				9.068	-H100	090-32	67
151	92	2.6	15	64	63	92	151	92	2.6	269	93	2.1	9.477	-H320	090-32	76
146	95	1.9	15	66	61	95	146	95	1.9	260	96	1.6	9.799	-H210	090-32	73
146	95	1.3	15	66	61	95	146	95	1.3	260	96	1.1	9.800	-H140	090-32	70
143	97	1.0	14	68	60	97	143	97	1.0				10.063	-H100	090-32	67
134	103	2.6	14	72	56	103	134	103	2.6	238	105	2.1	10.677	-H320	090-32	76
134	104	1.8	14	73	56	104	134	104	1.8	237	105	1.5	10.720	-H210	090-32	73
124	112	1.1	13	78	52	112	124	112	1.1				11.554	-H140	090-32	70
123	113	2.4	12	79	51	113	123	113	2.4	218	115	2.0	11.680	-H320	090-32	76
120	116	1.6	12	81	50	116	120	116	1.6	212	118	1.3	12.000	-H210	090-32	73
118	117	2.2	12	82	50	117	118	117	2.2	210	119	1.8	12.128	-H320	090-32	76
114	122	1.1	12	86	48	122	114	122	1.1				12.640	-H140	090-32	70
108	128	2.0	11	90	45	128	108	128	2.0	192	130	1.7	13.268	-H320	090-32	76
105	132	1.5	11	93	44	132	105	132	1.5	186	134	1.3	13.673	-H210	090-32	73
103	135	3.2	10	94	43	135	103	135	3.2	183	137	2.6	13.905	-H450	090-32	79



Selection tables, 4-pole motors

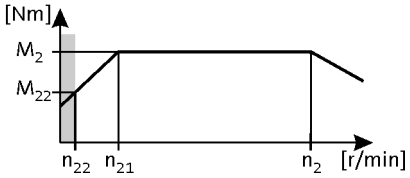

50 Hz: P_N = 1.5 kW
87 Hz: P_N = 2.7 kW

2-stage gearboxes

Netzbetrieb 400 V, 50 Hz			Umrichterbetrieb 5 Hz -		- 20 Hz		- 50 Hz (1:10)			- 87 Hz (1:17.4)			i	Produkt		
n_2 [r/min]	M_2 [Nm]	c	n_{22} [r/min]	M_{22} [Nm]	n_{21} [r/min]	M_2 [Nm]	n_2 [r/min]	M_2 [Nm]	c	n_2 [r/min]	M_2 [Nm]	c		g500	MH□MA□□	
103	135	1.0	10	95	43	135	103	135	1.0				13.957	-H140	090-32	70
96	144	2.0	9.7	101	40	144	96	144	2.0	171	146	1.7	14.898	-H320	090-32	76
94	148	1.4	9.5	104	39	148	94	148	1.4	166	150	1.1	15.306	-H210	090-32	73
91	152	2.9	9.2	107	38	152	91	152	2.9	162	154	2.4	15.714	-H450	090-32	79
86	162	1.3	8.7	114	36	162	86	162	1.3	152	165	1.1	16.750	-H210	090-32	73
85	164	1.7	8.6	115	36	164	85	164	1.7	150	166	1.4	16.923	-H320	090-32	76
84	165	2.7	8.5	116	35	165	84	165	2.7	149	167	2.3	17.033	-H450	090-32	79
79	177	1.8	7.9	124	33	177	79	177	1.8	140	179	1.5	18.250	-H320	090-32	76
77	182	1.2	7.7	127	32	182	77	182	1.2				18.750	-H210	090-32	73
75	186	2.4	7.5	131	31	186	75	186	2.4	132	189	2.0	19.250	-H450	090-32	79
69	201	1.5	7.0	141	29	201	69	201	1.5	123	204	1.2	20.731	-H320	090-32	76
65	215	2.1	6.5	150	27	215	65	215	2.1	115	218	1.7	22.170	-H450	090-32	79
60	230	1.4	6.1	161	25	230	60	230	1.4	107	233	1.2	23.754	-H320	090-32	76
57	243	1.9	5.8	170	24	243	57	243	1.9	102	246	1.5	25.056	-H450	090-32	79
53	261	1.2	5.4	183	22	261	53	261	1.2	94	265	1.2	26.983	-H320	090-32	76
52	267	1.7	5.3	187	22	267	52	267	1.7	92	271	1.6	27.578	-H450	090-32	79
49	286	1.1	4.9	200	20	286	49	286	1.1	86	290	1.1	29.548	-H320	090-32	76
46	302	1.5	4.7	211	19	302	46	302	1.5	82	306	1.4	31.167	-H450	090-32	79
40	346	1.3	4.1	242	17	346	40	346	1.3	71	351	1.2	35.689	-H450	090-32	79
36	391	1.2	3.6	273	15	391	36	391	1.2	63	396	1.1	40.333	-H450	090-32	79

3-stage gearboxes

Netzbetrieb 400 V, 50 Hz			Umrichterbetrieb 5 Hz -		- 20 Hz		- 50 Hz (1:10)			- 87 Hz (1:17.4)			i	Produkt		
n_2 [r/min]	M_2 [Nm]	c	n_{22} [r/min]	M_{22} [Nm]	n_{21} [r/min]	M_2 [Nm]	n_2 [r/min]	M_2 [Nm]	c	n_2 [r/min]	M_2 [Nm]	c		g500	MH□MA□□	
33	421	1.1	3.3	295	14	421	33	421	1.1				44.124	-H450	090-32	79



Selection tables, 4-pole motors

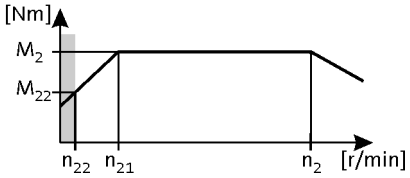

50 Hz: P_N = 2.2 kW
87 Hz: P_N = 3.9 kW

2-stage gearboxes

Netzbetrieb 400 V, 50 Hz			Umrichterbetrieb 5 Hz -		- 20 Hz		- 50 Hz (1:10)			- 87 Hz (1:17.4)			i	Produkt		
n_2 [r/min]	M_2 [Nm]	c	n_{22} [r/min]	M_{22} [Nm]	n_{21} [r/min]	M_2 [Nm]	n_2 [r/min]	M_2 [Nm]	c	n_2 [r/min]	M_2 [Nm]	c		g500	MH□MA□□	
426	48	2.6	43	33	177	48	426	48	2.6				3.389	-H210	100-12	73
311	66	2.2	31	46	129	66	311	66	2.2	550	66	1.8	4.648	-H210	100-12	73
311	66	2.9	31	46	129	66	311	66	2.9	550	66	2.4	4.648	-H320	100-12	76
259	79	2.0	26	55	108	79	259	79	2.0				5.583	-H210	100-12	73
238	86	2.7	24	60	99	86	238	86	2.7				6.083	-H320	100-12	76
231	88	1.8	23	62	96	88	231	88	1.8				6.250	-H210	100-12	73
209	97	2.2	21	68	87	97	209	97	2.2				6.910	-H320	100-12	76
189	108	1.6	19	75	78	108	189	108	1.6				7.657	-H210	100-12	73
186	110	3.2	19	77	77	110	186	110	3.2	328	110	2.7	7.787	-H450	100-12	79
173	118	2.1	17	82	72	118	173	118	2.1	306	118	1.8	8.343	-H320	100-12	76
169	121	1.4	17	84	70	121	169	121	1.4				8.571	-H210	100-12	73
164	124	3.0	17	87	68	124	164	124	3.0	290	124	2.5	8.800	-H450	100-12	79
153	134	1.8	15	93	63	134	153	134	1.8				9.477	-H320	100-12	76
148	138	1.3	15	97	61	138	148	138	1.3				9.799	-H210	100-12	73
145	141	2.7	15	98	60	141	145	141	2.7	256	141	2.3	9.965	-H450	100-12	79
135	151	1.8	14	105	56	151	135	151	1.8	239	151	1.5	10.677	-H320	100-12	76
135	151	1.3	14	106	56	151	135	151	1.3	238	152	1.0	10.720	-H210	100-12	73
128	159	2.5	13	111	53	159	128	159	2.5	227	159	2.1	11.262	-H450	100-12	79
124	165	1.7	12	115	51	165	124	165	1.7	219	165	1.4	11.680	-H320	100-12	76
120	169	1.1	12	118	50	169	120	169	1.1				12.000	-H210	100-12	73
119	171	1.5	12	119	50	171	119	171	1.5	211	172	1.2	12.128	-H320	100-12	76
117	174	2.4	12	121	49	174	117	174	2.4	207	174	2.0	12.320	-H450	100-12	79
109	187	1.4	11	131	45	187	109	187	1.4	193	188	1.2	13.268	-H320	100-12	76
106	193	1.0	11	135	44	193	106	193	1.0				13.673	-H210	100-12	73
104	196	2.2	10	137	43	196	104	196	2.2				13.905	-H450	100-12	79
97	210	1.4	9.7	147	40	210	97	210	1.4	172	211	1.2	14.898	-H320	100-12	76
92	222	2.0	9.2	155	38	222	92	222	2.0	163	222	1.7	15.714	-H450	100-12	79
85	239	1.2	8.6	167	36	239	85	239	1.2				16.923	-H320	100-12	76
85	240	1.9	8.5	168	35	240	85	240	1.9	150	241	1.6	17.033	-H450	100-12	79
79	257	1.2	7.9	180	33	257	79	257	1.2	140	258	1.0	18.250	-H320	100-12	76
75	272	1.7	7.5	190	31	272	75	272	1.7	133	272	1.4	19.250	-H450	100-12	79
70	292	1.0	7.0	204	29	292	70	292	1.0				20.731	-H320	100-12	76
65	313	1.4	6.5	218	27	313	65	313	1.4	115	314	1.2	22.170	-H450	100-12	79
58	353	1.3	5.8	247	24	353	58	353	1.3	102	354	1.1	25.056	-H450	100-12	79
52	389	1.2	5.3	272	22	389	52	389	1.2	93	390	1.1	27.578	-H450	100-12	79



Selection tables, 4-pole motors

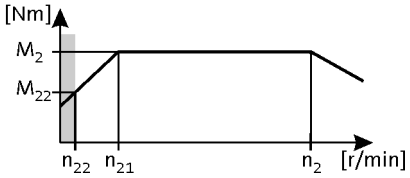

50 Hz: P_N = 2.2 kW
87 Hz: P_N = 2.2 kW

2-stage gearboxes

Netzbetrieb 400 V, 50 Hz			Umrichterbetrieb 5 Hz -		- 20 Hz		- 50 Hz (1:10)			- 87 Hz (1:17.4)			i	Produkt		
n_2 [r/min]	M_2 [Nm]	c	n_{22} [r/min]	M_{22} [Nm]	n_{21} [r/min]	M_2 [Nm]	n_2 [r/min]	M_2 [Nm]	c	n_2 [r/min]	M_2 [Nm]	c		g500	MH□MA□□	
46	440	1.0	4.7	307	19	440	46	440	1.0				31.167	-H450	100-12	79



Selection tables, 4-pole motors

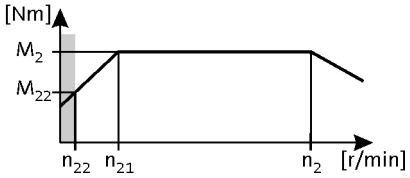

50 Hz: P_N = 3.0 kW
87 Hz: P_N = 5.4 kW

2-stage gearboxes

Netzbetrieb 400 V, 50 Hz			Umrichterbetrieb 5 Hz -		- 20 Hz		- 50 Hz (1:10)			- 87 Hz (1:17.4)			i	Produkt		
n_2 [r/min]	M_2 [Nm]	c	n_{22} [r/min]	M_{22} [Nm]	n_{21} [r/min]	M_2 [Nm]	n_2 [r/min]	M_2 [Nm]	c	n_2 [r/min]	M_2 [Nm]	c		g500	MH□MA□□	
426	65	1.9	43	46	177	65	426	65	1.9				3.389	-H210	100-32	73
426	65	2.5	43	46	177	65	426	65	2.5				3.389	-H320	100-32	76
311	89	1.6	31	63	129	89	311	89	1.6				4.648	-H210	100-32	73
311	89	2.1	31	63	129	89	311	89	2.1	550	91	1.7	4.648	-H320	100-32	76
306	91	3.2	31	64	127	91	306	91	3.2	541	92	2.7	4.724	-H450	100-32	79
259	107	1.5	26	75	108	107	259	107	1.5				5.583	-H210	100-32	73
255	109	2.9	26	76	106	109	255	109	2.9				5.678	-H450	100-32	79
239	116	2.8	24	81	99	116	239	116	2.8	423	118	2.3	6.045	-H450	100-32	79
238	117	1.9	24	82	99	117	238	117	1.9				6.083	-H320	100-32	76
231	120	1.3	23	84	96	120	231	120	1.3				6.250	-H210	100-32	73
219	127	2.6	22	89	91	127	219	127	2.6	386	129	2.2	6.613	-H450	100-32	79
209	133	1.6	21	93	87	133	209	133	1.6				6.910	-H320	100-32	76
189	147	1.2	19	103	78	147	189	147	1.2				7.657	-H210	100-32	73
186	150	2.4	19	105	77	150	186	150	2.4				7.787	-H450	100-32	79
173	160	1.6	17	112	72	160	173	160	1.6				8.343	-H320	100-32	76
169	165	1.0	17	115	70	165	169	165	1.0				8.571	-H210	100-32	73
164	169	2.2	17	118	68	169	164	169	2.2				8.800	-H450	100-32	79
153	182	1.3	15	127	63	182	153	182	1.3				9.477	-H320	100-32	76
145	192	2.0	15	134	60	192	145	192	2.0				9.965	-H450	100-32	79
135	205	1.3	14	144	56	205	135	205	1.3				10.677	-H320	100-32	76
128	217	1.9	13	151	53	217	128	217	1.9				11.262	-H450	100-32	79
124	225	1.2	12	157	51	225	124	225	1.2				11.680	-H320	100-32	76
119	233	1.1	12	163	50	233	119	233	1.1				12.128	-H320	100-32	76
117	237	1.7	12	166	49	237	117	237	1.7				12.320	-H450	100-32	79
109	255	1.0	11	178	45	255	109	255	1.0				13.268	-H320	100-32	76
104	267	1.6	10	187	43	267	104	267	1.6				13.905	-H450	100-32	79
97	287	1.0	9.7	200	40	287	97	287	1.0				14.898	-H320	100-32	76
92	302	1.5	9.2	211	38	302	92	302	1.5	163	308	1.2	15.714	-H450	100-32	79
85	328	1.4	8.5	229	35	328	85	328	1.4	150	334	1.1	17.033	-H450	100-32	79
75	370	1.2	7.5	259	31	370	75	370	1.2	133	377	1.0	19.250	-H450	100-32	79
65	426	1.1	6.5	298	27	426	65	426	1.1				22.170	-H450	100-32	79



Selection tables, 4-pole motors

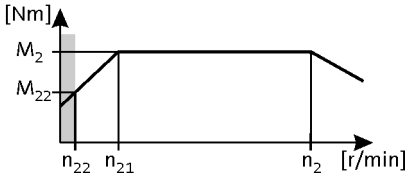

50 Hz: P_N = 4.0 kW
87 Hz: P_N = 7.1 kW

2-stage gearboxes

Netzbetrieb 400 V, 50 Hz			Umrichterbetrieb 5 Hz -		- 20 Hz		- 50 Hz (1:10)			- 87 Hz (1:17.4)			i	Produkt		
n_2 [r/min]	M_2 [Nm]	c	n_{22} [r/min]	M_{22} [Nm]	n_{21} [r/min]	M_2 [Nm]	n_2 [r/min]	M_2 [Nm]	c	n_2 [r/min]	M_2 [Nm]	c		g500	MH□MA□□	
429	86	1.9	43	54	177	86	429	86	1.9				3.389	-H320	112-22	76
422	88	2.9	42	55	174	88	422	88	2.9				3.444	-H450	112-22	79
313	118	1.6	31	74	129	118	313	118	1.6				4.648	-H320	112-22	76
308	120	2.4	31	75	127	120	308	120	2.4				4.724	-H450	112-22	79
256	145	2.2	26	91	106	145	256	145	2.2				5.678	-H450	112-22	79
241	154	2.1	24	96	99	154	241	154	2.1	424	155	1.7	6.045	-H450	112-22	79
239	155	1.5	24	97	99	155	239	155	1.5				6.083	-H320	112-22	76
220	168	2.0	22	106	91	168	220	168	2.0	388	170	1.7	6.613	-H450	112-22	79
211	176	1.2	21	110	87	176	211	176	1.2				6.910	-H320	112-22	76
187	198	1.8	19	124	77	198	187	198	1.8				7.787	-H450	112-22	79
174	212	1.2	17	133	72	212	174	212	1.2				8.343	-H320	112-22	76
165	224	1.7	17	140	68	224	165	224	1.7				8.800	-H450	112-22	79
146	254	1.5	15	159	60	254	146	254	1.5				9.965	-H450	112-22	79
129	287	1.4	13	180	53	287	129	287	1.4				11.262	-H450	112-22	79
118	314	1.3	12	197	49	314	118	314	1.3				12.320	-H450	112-22	79
105	354	1.2	10	222	43	354	105	354	1.2				13.905	-H450	112-22	79
93	400	1.1	9.2	251	38	400	93	400	1.1				15.714	-H450	112-22	79
85	434	1.0	8.5	272	35	434	85	434	1.0				17.033	-H450	112-22	79



Selection tables, 4-pole motors

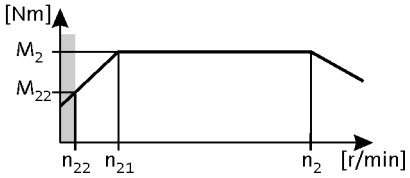

50 Hz: P_N = 5.5 kW
87 Hz: P_N = 9.7 kW

2-stage gearboxes

Netzbetrieb 400 V, 50 Hz			Umrichterbetrieb 5 Hz -		- 20 Hz		- 50 Hz (1:10)			- 87 Hz (1:17.4)			i	Produkt		
n_2 [r/min]	M_2 [Nm]	c	n_{22} [r/min]	M_{22} [Nm]	n_{21} [r/min]	M_2 [Nm]	n_2 [r/min]	M_2 [Nm]	c	n_2 [r/min]	M_2 [Nm]	c		g500	MH□MA□□	
427	119	2.1	42	75	174	119	427	119	2.1				3.444	-H450	132-12	79
311	164	1.8	31	102	127	164	311	164	1.8				4.724	-H450	132-12	79
259	197	1.6	26	123	106	197	259	197	1.6				5.678	-H450	132-12	79
243	210	1.5	24	131	99	210	243	210	1.5				6.045	-H450	132-12	79
222	229	1.5	22	143	91	229	222	229	1.5				6.613	-H450	132-12	79
189	270	1.3	19	169	77	270	189	270	1.3				7.787	-H450	132-12	79
167	305	1.2	17	191	68	305	167	305	1.2				8.800	-H450	132-12	79
148	345	1.1	15	216	60	345	148	345	1.1				9.965	-H450	132-12	79
131	390	1.0	13	244	53	390	131	390	1.0				11.262	-H450	132-12	79



Selection tables, 4-pole motors

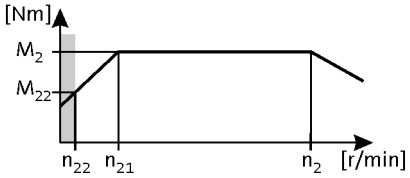

50 Hz: P_N = 7.5 kW
87 Hz: P_N = 13.2 kW

2-stage gearboxes

Netzbetrieb 400 V, 50 Hz			Umrichterbetrieb 5 Hz -		- 20 Hz		- 50 Hz (1:10)			- 87 Hz (1:17.4)			i	Produkt		
n_2 [r/min]	M_2 [Nm]	c	n_{22} [r/min]	M_{22} [Nm]	n_{21} [r/min]	M_2 [Nm]	n_2 [r/min]	M_2 [Nm]	c	n_2 [r/min]	M_2 [Nm]	c		g500	MH□MA□□	
424	164	1.6	42	103	174	164	424	164	1.6				3.444	-H450	132-22	79
309	225	1.3	31	141	127	225	309	225	1.3				4.724	-H450	132-22	79
257	270	1.2	26	169	106	270	257	270	1.2				5.678	-H450	132-22	79
242	288	1.1	24	180	99	288	242	288	1.1				6.045	-H450	132-22	79
221	315	1.1	22	197	91	315	221	315	1.1				6.613	-H450	132-22	79



Selection tables, 2-pole motors

50 Hz: P_N = 0.18 kW

2-stage gearboxes

Netzbetrieb 400 V, 50 Hz			i	Produkt		
n_2 [r/min]	M_2 [Nm]	c		g500	MD□MA□□	
141	12	5.8	19.486	-H100	063-11	85
123	14	5.8	22.314	-H100	063-11	85
109	15	4.8	25.095	-H100	063-11	85
95	17	5.3	28.738	-H100	063-11	85
106	19	4.8	31.805	-H100	063-11	85
75	22	4.2	36.422	-H100	063-11	85
69	24	3.8	39.857	-H100	063-11	85
60	28	3.6	45.643	-H100	063-11	85
52	32	2.2	52.510	-H100	063-11	85
50	33	4.0	54.438	-H210	063-11	91
46	37	2.2	60.133	-H100	063-11	85
41	41	2.2	66.908	-H140	063-11	88
37	45	2.2	73.879	-H140	063-11	88



Selection tables, 2-pole motors

50 Hz: P_N = 0.25 kW

2-stage gearboxes

Netzbetrieb 400 V, 50 Hz			i	Produkt		
n_2 [r/min]	M_2 [Nm]	c		g500	MD□MA□□	
421	6.0	5.2	6.440	-H100	063-31	85
330	7.0	4.9	8.214	-H100	063-31	85
239	10	5.2	11.360	-H100	063-31	85
214	11	4.9	12.653	-H100	063-31	85
187	12	4.9	14.490	-H100	063-31	85
168	14	4.9	16.122	-H140	063-31	88
152	15	4.9	17.802	-H140	063-31	88
139	17	4.1	19.486	-H100	063-31	85
121	19	4.1	22.314	-H100	063-31	85
108	21	3.4	25.095	-H100	063-31	85
118	25	3.8	28.738	-H100	063-31	85
107	27	3.4	31.805	-H100	063-31	85
74	31	3.0	36.422	-H100	063-31	85
68	34	2.7	39.857	-H100	063-31	85
59	39	2.6	45.643	-H100	063-31	85
53	43	3.0	50.786	-H140	063-31	88
52	45	1.6	52.510	-H100	063-31	85
50	47	2.8	54.438	-H210	063-31	91
48	48	2.9	56.077	-H140	063-31	88
45	51	1.6	60.133	-H100	063-31	85
45	52	2.8	60.938	-H210	063-31	91
41	57	1.6	66.908	-H140	063-31	88
37	63	1.6	73.879	-H140	063-31	88



Selection tables, 2-pole motors

50 Hz: P_N = 0.37 kW

2-stage gearboxes

Netzbetrieb 400 V, 50 Hz			i	Produkt		
n_2 [r/min]	M_2 [Nm]	c		g500	MD□MA□□	
270	13	5.9	10.063	-H100	071-11	85
239	14	5.7	11.360	-H100	071-11	85
215	16	5.1	12.653	-H100	071-11	85
188	18	4.5	14.490	-H100	071-11	85
176	20	4.2	15.500	-H100	071-11	85
153	22	3.7	17.750	-H100	071-11	85
140	25	3.3	19.486	-H100	071-11	85
122	28	2.9	22.314	-H100	071-11	85
108	32	2.6	25.095	-H100	071-11	85
117	36	2.6	28.738	-H100	071-11	85
106	40	2.3	31.805	-H100	071-11	85
85	40	3.2	31.976	-H140	071-11	88
77	44	2.9	35.308	-H140	071-11	88
75	46	2.0	36.422	-H100	071-11	85
68	50	1.9	39.857	-H100	071-11	85
67	51	2.7	40.526	-H140	071-11	88
61	56	2.5	44.748	-H140	071-11	88
60	58	1.7	45.643	-H100	071-11	85
54	64	2.0	50.786	-H140	071-11	88
50	69	2.0	54.438	-H210	071-11	91
49	71	2.0	56.077	-H140	071-11	88
45	77	2.0	60.938	-H210	071-11	91



Selection tables, 2-pole motors

50 Hz: P_N = 0.55 kW

2-stage gearboxes

Netzbetrieb 400 V, 50 Hz			i	Produkt		
n_2 [r/min]	M_2 [Nm]	c		g500	MD□MA□□	
805	6.0	5.1	3.267	-H140	071-31	88
784	6.0	5.1	3.354	-H100	071-31	85
572	9.0	5.1	4.600	-H100	071-31	85
509	10	5.1	5.167	-H100	071-31	85
447	11	4.7	5.887	-H100	071-31	85
408	12	4.7	6.440	-H100	071-31	85
371	14	5.1	7.086	-H100	071-31	85
320	16	4.3	8.214	-H100	071-31	85
290	18	4.5	9.068	-H100	071-31	85
261	19	3.9	10.063	-H100	071-31	85
232	22	3.8	11.360	-H100	071-31	85
208	25	3.4	12.653	-H100	071-31	85
182	28	3.0	14.490	-H100	071-31	85
170	30	2.8	15.500	-H100	071-31	85
148	34	2.4	17.750	-H100	071-31	85
135	38	2.2	19.486	-H100	071-31	85
133	38	3.0	19.750	-H140	071-31	88
121	42	2.8	21.808	-H140	071-31	88
118	43	1.9	22.314	-H100	071-31	85
106	48	2.4	24.829	-H140	071-31	88
105	49	1.7	25.095	-H100	071-31	85
118	53	2.5	27.415	-H140	071-31	88
113	56	1.7	28.738	-H100	071-31	85
102	62	1.5	31.805	-H100	071-31	85
101	62	2.1	31.976	-H140	071-31	88
75	68	2.9	35.095	-H210	071-31	91
75	68	1.9	35.308	-H140	071-31	88
72	71	1.3	36.422	-H100	071-31	85
69	74	3.2	38.238	-H320	071-31	94
67	76	2.6	39.286	-H210	071-31	91
66	77	1.2	39.857	-H100	071-31	85
65	79	1.8	40.526	-H140	071-31	88
62	83	2.2	42.593	-H210	071-31	91
59	87	1.6	44.748	-H140	071-31	88
58	88	1.1	45.643	-H100	071-31	85
57	90	2.4	46.407	-H320	071-31	94
55	92	2.2	47.679	-H210	071-31	91



Selection tables, 2-pole motors

50 Hz: P_N = 0.55 kW

2-stage gearboxes

Netzbetrieb 400 V, 50 Hz			i	Produkt		
n_2 [r/min]	M_2 [Nm]	c		g500	MD□MA□□	
52	98	1.3	50.786	-H140	071-31	88
50	102	2.4	52.715	-H320	071-31	94
48	105	1.3	54.438	-H210	071-31	91
48	106	2.6	54.750	-H450	071-31	97
47	109	1.3	56.077	-H140	071-31	88
43	118	1.3	60.938	-H210	071-31	91
43	120	2.6	61.875	-H450	071-31	97



Selection tables, 6-pole motors

50 Hz: P_N = 0.18 kW

2-stage gearboxes

Netzbetrieb 400 V, 50 Hz			i	Produkt		
n_2 [r/min]	M_2 [Nm]	c		g500	MD□MA□□	
113	15	5.7	8.214	-H100	071-13	100
103	16	5.9	9.068	-H100	071-13	100
92	18	5.1	10.063	-H100	071-13	100
82	20	4.9	11.360	-H100	071-13	100
74	23	4.4	12.653	-H100	071-13	100
64	26	3.9	14.490	-H100	071-13	100
60	28	3.6	15.500	-H100	071-13	100
52	32	3.1	17.750	-H100	071-13	100
48	35	2.9	19.486	-H100	071-13	100
42	40	2.5	22.314	-H100	071-13	100
38	45	3.1	24.829	-H140	071-13	103
37	45	2.2	25.095	-H100	071-13	100
34	49	2.9	27.415	-H140	071-13	103
32	52	1.9	28.738	-H100	071-13	100
29	57	1.8	31.805	-H100	071-13	100
29	57	2.4	31.976	-H140	071-13	103
26	63	2.2	35.308	-H140	071-13	103
26	65	1.5	36.422	-H100	071-13	100
24	70	3.0	39.286	-H210	071-13	106
23	71	1.4	39.857	-H100	071-13	100
23	73	1.9	40.526	-H140	071-13	103
22	76	2.4	42.593	-H210	071-13	106
21	80	1.7	44.748	-H140	071-13	103
20	82	1.2	45.643	-H100	071-13	100
20	83	2.6	46.407	-H320	071-13	109
20	85	2.4	47.679	-H210	071-13	106
18	91	1.4	50.786	-H140	071-13	103
18	95	2.6	52.715	-H320	071-13	109
17	98	1.4	54.438	-H210	071-13	106
17	98	2.8	54.750	-H450	071-13	112
17	101	1.4	56.077	-H140	071-13	103
15	109	1.4	60.938	-H210	071-13	106
15	111	2.8	61.875	-H450	071-13	112

3-stage gearboxes

Netzbetrieb 400 V, 50 Hz			i	Produkt		
n_2 [r/min]	M_2 [Nm]	c		g500	MD□MA□□	
21	77	2.7	43.390	-H210	071-13	106
19	86	2.5	48.571	-H210	071-13	106
17	98	2.1	55.529	-H210	071-13	106
15	107	3.0	60.502	-H320	071-13	109



Selection tables, 6-pole motors

50 Hz: P_N = 0.18 kW

3-stage gearboxes

Netzbetrieb 400 V, 50 Hz			i	Produkt		
n_2 [r/min]	M_2 [Nm]	c		g500	MD□MA□□	
15	110	1.9	62.160	-H210	071-13	106
14	121	2.6	68.726	-H320	071-13	109
13	125	1.7	71.026	-H210	071-13	106
12	137	2.3	77.387	-H320	071-13	109
12	139	3.2	78.794	-H450	071-13	112
12	140	1.5	79.507	-H210	071-13	106
11	155	2.1	87.906	-H320	071-13	109
10	157	2.9	89.048	-H450	071-13	112
10	163	1.3	92.205	-H210	071-13	106
12	170	2.6	96.522	-H450	071-13	112
11	177	1.8	100.462	-H320	071-13	109
11	182	1.2	103.214	-H210	071-13	106
11	193	2.3	109.083	-H450	071-13	112
10	202	1.6	114.118	-H320	071-13	109
7.9	209	1.0	118.162	-H210	071-13	106
7.7	214	2.1	121.342	-H450	071-13	112
7.2	227	1.4	128.743	-H320	071-13	109
6.8	242	1.9	137.133	-H450	071-13	112
6.4	258	1.2	146.244	-H320	071-13	109
6.0	276	1.6	156.274	-H450	071-13	112
5.6	294	1.1	166.541	-H320	071-13	109
5.3	312	1.4	176.611	-H450	071-13	112
4.7	350	1.3	198.059	-H450	071-13	112
4.2	395	1.1	223.833	-H450	071-13	112
3.7	438	1.0	248.200	-H450	071-13	112



Selection tables, 6-pole motors

50 Hz: P_N = 0.25 kW

2-stage gearboxes

Netzbetrieb 400 V, 50 Hz			i	Produkt		
n_2 [r/min]	M_2 [Nm]	c		g500	MD□MA□□	
285	8.0	4.7	3.267	-H140	071-33	103
277	8.0	4.7	3.354	-H100	071-33	100
202	11	4.7	4.600	-H100	071-33	100
180	13	4.7	5.167	-H100	071-33	100
158	15	4.4	5.887	-H100	071-33	100
144	16	4.4	6.440	-H100	071-33	100
131	18	4.7	7.086	-H100	071-33	100
113	20	4.1	8.214	-H100	071-33	100
103	23	4.3	9.068	-H100	071-33	100
113	25	3.7	10.063	-H100	071-33	100
100	28	3.5	11.360	-H100	071-33	100
74	32	3.2	12.653	-H100	071-33	100
64	36	2.8	14.490	-H100	071-33	100
60	39	2.6	15.500	-H100	071-33	100
52	44	2.3	17.750	-H100	071-33	100
52	44	3.2	17.802	-H140	071-33	103
48	49	2.1	19.486	-H100	071-33	100
47	49	2.9	19.750	-H140	071-33	103
43	54	2.6	21.808	-H140	071-33	103
42	56	1.8	22.314	-H100	071-33	100
38	62	2.3	24.829	-H140	071-33	103
37	63	1.6	25.095	-H100	071-33	100
34	68	3.1	27.119	-H210	071-33	106
34	68	2.1	27.415	-H140	071-33	103
32	72	1.4	28.738	-H100	071-33	100
32	74	3.1	29.548	-H320	071-33	109
31	76	2.8	30.357	-H210	071-33	106
29	79	1.3	31.805	-H100	071-33	100
29	80	1.8	31.976	-H140	071-33	103
28	84	3.1	33.564	-H320	071-33	109
27	87	2.4	35.095	-H210	071-33	106
26	88	1.6	35.308	-H140	071-33	103
26	89	3.1	35.689	-H450	071-33	112
26	91	1.1	36.422	-H100	071-33	100
24	95	2.6	38.238	-H320	071-33	109
24	98	2.2	39.286	-H210	071-33	106
23	99	1.0	39.857	-H100	071-33	100



Selection tables, 6-pole motors

50 Hz: P_N = 0.25 kW

2-stage gearboxes

Netzbetrieb 400 V, 50 Hz			i	Produkt		
n_2 [r/min]	M_2 [Nm]	c		g500	MD□MA□□	
23	100	3.1	40.333	-H450	071-33	112
23	101	1.4	40.526	-H140	071-33	103
22	106	1.7	42.593	-H210	071-33	106
22	108	2.7	43.313	-H450	071-33	112
21	108	2.6	43.436	-H320	071-33	109
21	111	1.3	44.748	-H140	071-33	103
20	116	1.9	46.407	-H320	071-33	109
20	119	1.7	47.679	-H210	071-33	106
19	122	2.7	48.950	-H450	071-33	112
18	126	1.0	50.786	-H140	071-33	103
18	131	1.9	52.715	-H320	071-33	109
17	136	1.0	54.438	-H210	071-33	106
17	136	2.0	54.750	-H450	071-33	112
17	140	1.0	56.077	-H140	071-33	103
15	152	1.0	60.938	-H210	071-33	106
15	154	2.0	61.875	-H450	071-33	112

3-stage gearboxes

Netzbetrieb 400 V, 50 Hz			i	Produkt		
n_2 [r/min]	M_2 [Nm]	c		g500	MD□MA□□	
21	106	2.0	43.390	-H210	071-33	106
20	116	2.8	47.276	-H320	071-33	109
19	119	1.8	48.571	-H210	071-33	106
17	132	2.4	53.703	-H320	071-33	109
17	136	1.5	55.529	-H210	071-33	106
17	139	3.3	56.469	-H450	071-33	112
15	148	2.2	60.502	-H320	071-33	109
15	152	3.0	61.774	-H450	071-33	112
15	152	1.4	62.160	-H210	071-33	106
14	169	1.9	68.726	-H320	071-33	109
13	171	2.6	69.813	-H450	071-33	112
13	174	1.2	71.026	-H210	071-33	106
12	190	1.7	77.387	-H320	071-33	109
12	193	2.3	78.794	-H450	071-33	112
12	195	1.1	79.507	-H210	071-33	106
11	216	1.5	87.906	-H320	071-33	109
10	218	2.1	89.048	-H450	071-33	112
12	237	1.9	96.522	-H450	071-33	112
11	246	1.3	100.462	-H320	071-33	109
11	268	1.7	109.083	-H450	071-33	112
10	280	1.1	114.118	-H320	071-33	109



Selection tables, 6-pole motors

50 Hz: P_N = 0.25 kW

3-stage gearboxes

Netzbetrieb 400 V, 50 Hz			i	Produkt		
n_2 [r/min]	M_2 [Nm]	c		g500	MD□MA□□	
7.7	298	1.5	121.342	-H450	071-33	112
7.2	316	1.0	128.743	-H320	071-33	109
6.8	336	1.3	137.133	-H450	071-33	112
6.0	383	1.2	156.274	-H450	071-33	112
5.3	433	1.0	176.611	-H450	071-33	112



Selection tables, 6-pole motors

50 Hz: P_N = 0.37 kW

2-stage gearboxes

Netzbetrieb 400 V, 50 Hz			i	Produkt		
n_2 [r/min]	M_2 [Nm]	c		g500	MD□MA□□	
291	12	5.7	3.267	-H140	080-13	103
283	12	5.1	3.354	-H100	080-13	100
207	17	4.3	4.600	-H100	080-13	100
184	19	4.0	5.167	-H100	080-13	100
161	21	3.8	5.887	-H100	080-13	100
148	23	3.6	6.440	-H100	080-13	100
134	26	3.4	7.086	-H100	080-13	100
116	30	3.1	8.214	-H100	080-13	100
105	33	2.9	9.068	-H100	080-13	100
115	36	2.7	10.063	-H100	080-13	100
102	41	2.4	11.360	-H100	080-13	100
82	42	3.1	11.554	-H140	080-13	103
75	46	2.9	12.640	-H140	080-13	103
75	46	2.2	12.653	-H100	080-13	100
68	50	2.7	13.957	-H140	080-13	103
66	52	1.9	14.490	-H100	080-13	100
61	56	1.8	15.500	-H100	080-13	100
59	58	2.4	16.122	-H140	080-13	103
54	64	1.6	17.750	-H100	080-13	100
53	64	2.2	17.802	-H140	080-13	103
51	68	3.1	18.750	-H210	080-13	106
49	70	1.4	19.486	-H100	080-13	100
48	71	2.0	19.750	-H140	080-13	103
44	79	2.7	21.802	-H210	080-13	106
44	79	1.8	21.808	-H140	080-13	103
43	81	1.2	22.314	-H100	080-13	100
39	88	2.4	24.405	-H210	080-13	106
38	90	1.6	24.829	-H140	080-13	103
38	91	1.1	25.095	-H100	080-13	100
35	98	2.2	27.119	-H210	080-13	106
35	99	1.4	27.415	-H140	080-13	103
32	107	3.0	29.548	-H320	080-13	109
31	110	1.9	30.357	-H210	080-13	106
30	115	1.2	31.976	-H140	080-13	103
28	121	2.6	33.564	-H320	080-13	109
27	127	1.7	35.095	-H210	080-13	106
27	127	1.1	35.308	-H140	080-13	103



Selection tables, 6-pole motors

50 Hz: P_N = 0.37 kW

2-stage gearboxes

Netzbetrieb 400 V, 50 Hz			i	Produkt		
n_2 [r/min]	M_2 [Nm]	c		g500	MD□MA□□	
25	138	1.8	38.238	-H320	080-13	109
24	142	1.5	39.286	-H210	080-13	106
24	146	3.1	40.333	-H450	080-13	112
22	154	1.2	42.593	-H210	080-13	106
22	156	2.1	43.313	-H450	080-13	112
22	157	1.8	43.436	-H320	080-13	109
21	167	1.3	46.407	-H320	080-13	109
20	172	1.2	47.679	-H210	080-13	106
19	177	2.1	48.950	-H450	080-13	112
18	190	1.3	52.715	-H320	080-13	109
17	198	1.4	54.750	-H450	080-13	112
15	223	1.4	61.875	-H450	080-13	112

3-stage gearboxes

Netzbetrieb 400 V, 50 Hz			i	Produkt		
n_2 [r/min]	M_2 [Nm]	c		g500	MD□MA□□	
22	154	1.4	43.390	-H210	080-13	106
22	157	2.9	44.124	-H450	080-13	112
20	168	1.9	47.276	-H320	080-13	109
20	173	1.2	48.571	-H210	080-13	106
19	177	2.5	49.867	-H450	080-13	112
18	191	1.7	53.703	-H320	080-13	109
17	197	1.1	55.529	-H210	080-13	106
17	201	2.2	56.469	-H450	080-13	112
16	215	1.5	60.502	-H320	080-13	109
15	220	2.1	61.774	-H450	080-13	112
14	244	1.3	68.726	-H320	080-13	109
14	248	1.8	69.813	-H450	080-13	112
12	275	1.2	77.387	-H320	080-13	109
12	280	1.6	78.794	-H450	080-13	112
11	312	1.0	87.906	-H320	080-13	109
11	317	1.4	89.048	-H450	080-13	112
12	343	1.3	96.522	-H450	080-13	112
11	388	1.2	109.083	-H450	080-13	112
7.8	431	1.0	121.342	-H450	080-13	112



Selection tables, 6-pole motors

50 Hz: P_N = 0.55 kW

2-stage gearboxes

Netzbetrieb 400 V, 50 Hz			i	Produkt		
n_2 [r/min]	M_2 [Nm]	c		g500	MD□MA□□	
285	18	3.7	3.267	-H140	080-33	103
277	18	3.4	3.354	-H100	080-33	100
202	25	2.9	4.600	-H100	080-33	100
180	28	2.7	5.167	-H100	080-33	100
158	32	2.5	5.887	-H100	080-33	100
148	34	3.1	6.272	-H140	080-33	103
144	35	2.4	6.440	-H100	080-33	100
131	39	2.2	7.086	-H100	080-33	100
128	40	2.7	7.269	-H140	080-33	103
116	44	2.7	8.000	-H140	080-33	103
113	45	2.0	8.214	-H100	080-33	100
103	49	2.4	9.029	-H140	080-33	103
103	50	1.9	9.068	-H100	080-33	100
116	54	2.3	9.800	-H140	080-33	103
113	55	1.8	10.063	-H100	080-33	100
87	59	3.2	10.720	-H210	080-33	106
100	62	1.6	11.360	-H100	080-33	100
81	63	2.0	11.554	-H140	080-33	103
78	66	2.8	12.000	-H210	080-33	106
74	69	1.9	12.640	-H140	080-33	103
74	69	1.4	12.653	-H100	080-33	100
68	75	2.7	13.673	-H210	080-33	106
67	76	1.8	13.957	-H140	080-33	103
64	79	1.3	14.490	-H100	080-33	100
61	84	2.4	15.306	-H210	080-33	106
60	85	1.2	15.500	-H100	080-33	100
58	88	1.6	16.122	-H140	080-33	103
56	92	2.3	16.750	-H210	080-33	106
55	93	3.0	16.923	-H320	080-33	109
52	97	1.0	17.750	-H100	080-33	100
52	98	1.4	17.802	-H140	080-33	103
51	100	3.1	18.250	-H320	080-33	109
50	103	2.0	18.750	-H210	080-33	106
47	108	1.3	19.750	-H140	080-33	103
45	114	2.6	20.731	-H320	080-33	109
43	119	1.8	21.802	-H210	080-33	106
43	119	1.2	21.808	-H140	080-33	103



Selection tables, 6-pole motors

50 Hz: P_N = 0.55 kW

2-stage gearboxes

Netzbetrieb 400 V, 50 Hz			i	Produkt		
n_2 [r/min]	M_2 [Nm]	c		g500	MD□MA□□	
42	121	3.1	22.170	-H450	080-33	112
39	130	2.5	23.754	-H320	080-33	109
38	134	1.6	24.405	-H210	080-33	106
38	136	1.0	24.829	-H140	080-33	103
37	137	3.1	25.056	-H450	080-33	112
35	148	2.2	26.983	-H320	080-33	109
34	149	1.4	27.119	-H210	080-33	106
34	151	2.6	27.578	-H450	080-33	112
32	162	2.0	29.548	-H320	080-33	109
31	166	1.3	30.357	-H210	080-33	106
30	171	2.6	31.167	-H450	080-33	112
28	184	1.7	33.564	-H320	080-33	109
27	192	1.1	35.095	-H210	080-33	106
26	196	2.3	35.689	-H450	080-33	112
24	210	1.2	38.238	-H320	080-33	109
23	221	2.0	40.333	-H450	080-33	112
22	237	1.4	43.313	-H450	080-33	112
21	238	1.2	43.436	-H320	080-33	109
19	268	1.4	48.950	-H450	080-33	112

3-stage gearboxes

Netzbetrieb 400 V, 50 Hz			i	Produkt		
n_2 [r/min]	M_2 [Nm]	c		g500	MD□MA□□	
21	238	1.9	44.124	-H450	080-33	112
20	255	1.3	47.276	-H320	080-33	109
19	269	1.7	49.867	-H450	080-33	112
17	290	1.1	53.703	-H320	080-33	109
17	305	1.5	56.469	-H450	080-33	112
15	333	1.4	61.774	-H450	080-33	112
13	377	1.2	69.813	-H450	080-33	112
12	425	1.1	78.794	-H450	080-33	112



Dimensions, notes

Notes on the dimensions

The following legend shows the layout of the dimension sheets.

Product gearbox

g500-H100

Driven shaft design

Abmessungen mit Vollwelle

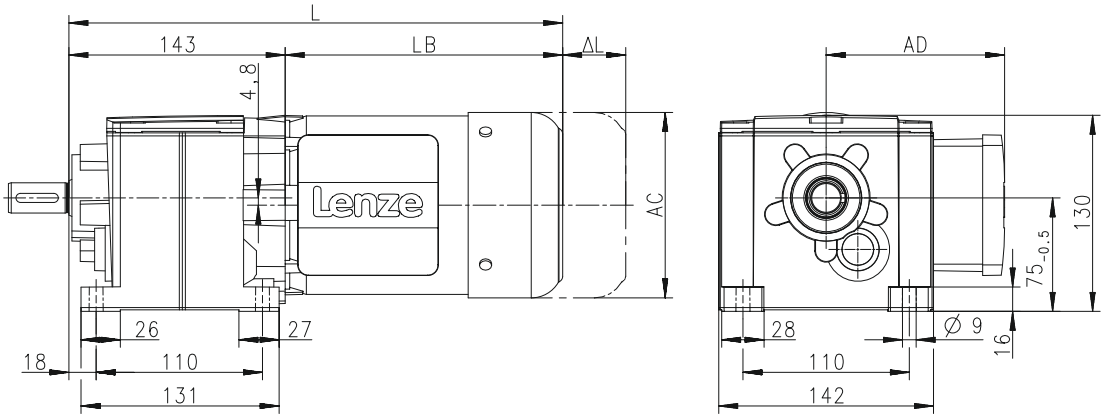

Product Motor

Produkt			MD□MA□□							
			063-12	063-32	063-42	071-32	071-42	080-32	080-42	090-32
Abmessungen										
Gesamtlänge	**L**	**[mm]**		326		346		369		402
Länge Motor	**LB**	**[mm]**		183		203		226		259
Länge Motoranbauten	**Δ L**	**[mm]**		170		165		183		181
Motordurchmesser	**AC**	**[mm]**		123		139		156		176
Abstand Motor/Anschluss	**AD**	**[mm]**		100		109		150		157

Distance of motor centre to the end of terminal box

Total length of the drive without built-on accessories

Motor diameter

Motor length without built-on accessories

Additional length of the built-on accessories (longest version)

6.3



Dimensions, 4-pole motors

g500-H45

Dimensions with solid shaft

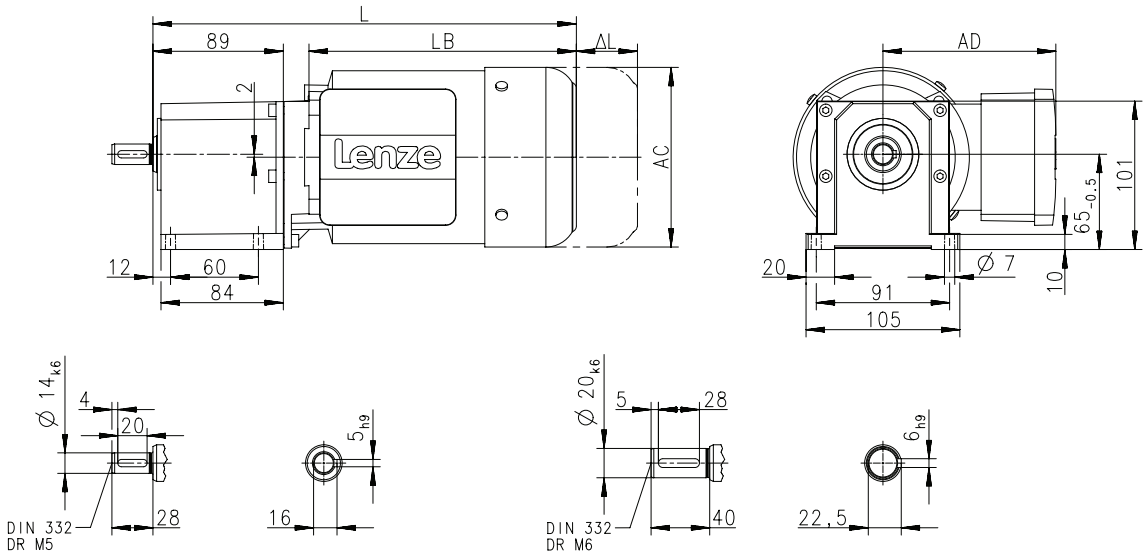

8800067-00

Produkt			MD□MA□□						
			063-02	063-12	063-22	063-32	063-42	071-32	071-42
Abmessungen									
Gesamtlänge	**L**	**[mm]**	261	288	261	288		308	
Länge Motor	**LB**	**[mm]**	156	183	156	183		203	
Länge Motoranbauten	**Δ L**	**[mm]**	135	170	135	170		165	
Motordurchmesser	**AC**	**[mm]**	123					139	
Abstand Motor/Anschluss	**AD**	**[mm]**	100					109	



Dimensions, 4-pole motors

g500-H45

Dimensions with solid shaft and centering

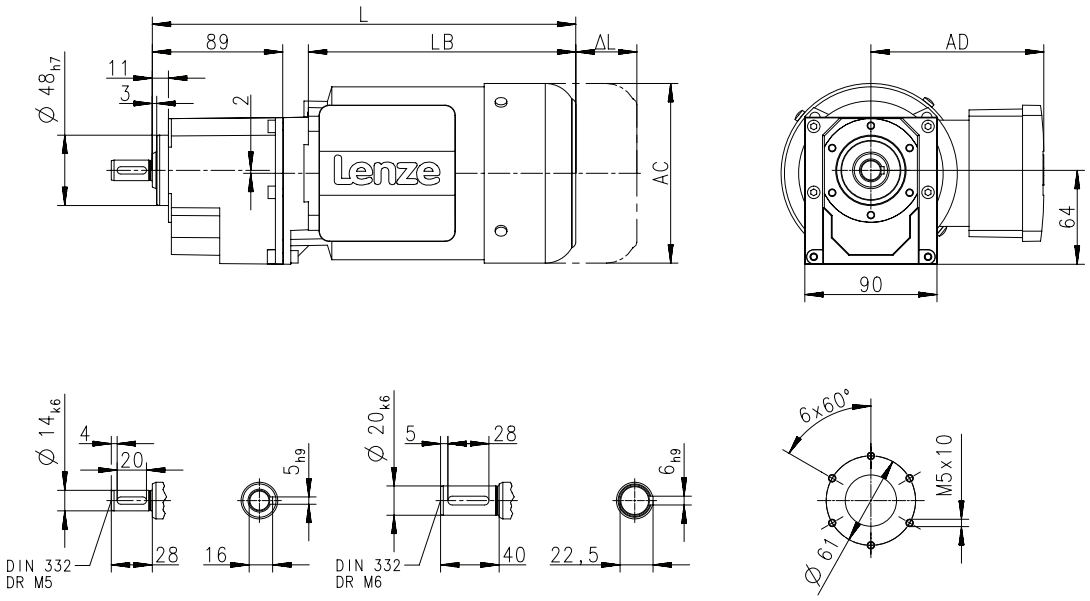

Produkt			MD□MA□□						
			063-02	063-12	063-22	063-32	063-42	071-32	071-42
Abmessungen									
Gesamtlänge	**L**	**[mm]**	261	288	261	288		308	
Länge Motor	**LB**	**[mm]**	156	183	156	183		203	
Länge Motoranbauten	**Δ L**	**[mm]**	135	170	135	170		165	
Motordurchmesser	**AC**	**[mm]**	123					139	
Abstand Motor/Anschluss	**AD**	**[mm]**	100					109	



Dimensions, 4-pole motors

g500-H45

Dimensions with solid shaft and Flange

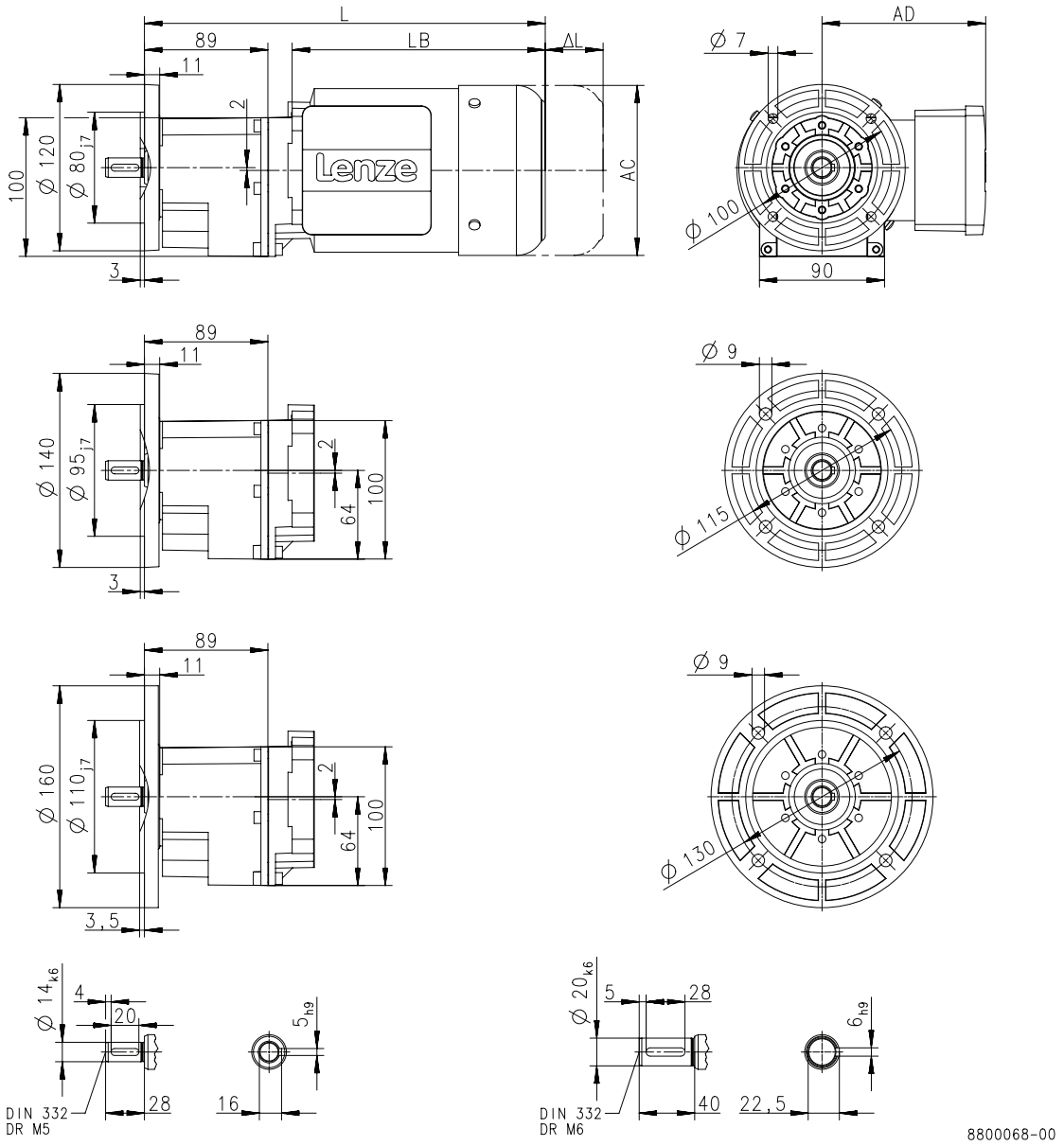

Produkt			MD□MA□□						
			063-02	063-12	063-22	063-32	063-42	071-32	071-42
Abmessungen									
Gesamtlänge	**L**	**[mm]**	261	288	261	288		308	
Länge Motor	**LB**	**[mm]**	156	183	156	183		203	
Länge Motoranbauten	**Δ L**	**[mm]**	135	170	135	170		165	
Motordurchmesser	**AC**	**[mm]**	123					139	
Abstand Motor/Anschluss	**AD**	**[mm]**	100					109	



Dimensions, 4-pole motors

g500-H100

Dimensions with solid shaft

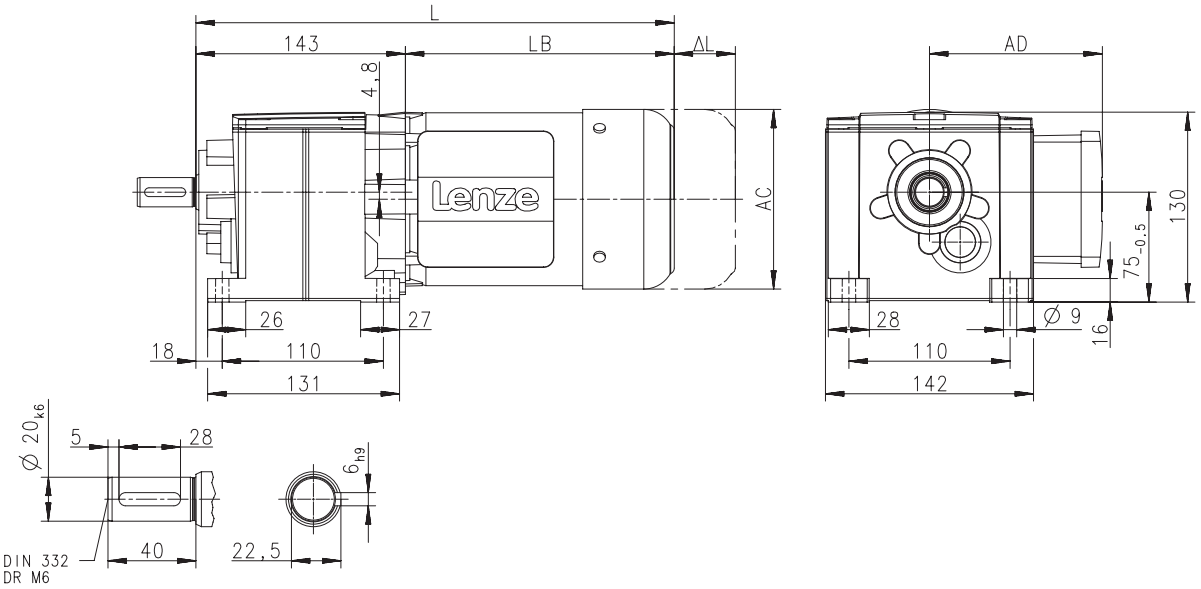

8800079-00

Produkt			MD□MA□□					MH□MA□□		
			063-12	063-32	063-42	071-32	071-42	080-32	090-12	090-32
Abmessungen										
Gesamtlänge	**L**	**[mm]**	326			346		369	428	
Länge Motor	**LB**	**[mm]**	183			203		226	285	
Länge Motoranbauten	**Δ L**	**[mm]**	170			165		183	181	
Motordurchmesser	**AC**	**[mm]**	123			139		156	176	
Abstand Motor/Anschluss	**AD**	**[mm]**	100			109		150	152	157



Dimensions, 4-pole motors

g500-H100

Dimensions with solid shaft and centering

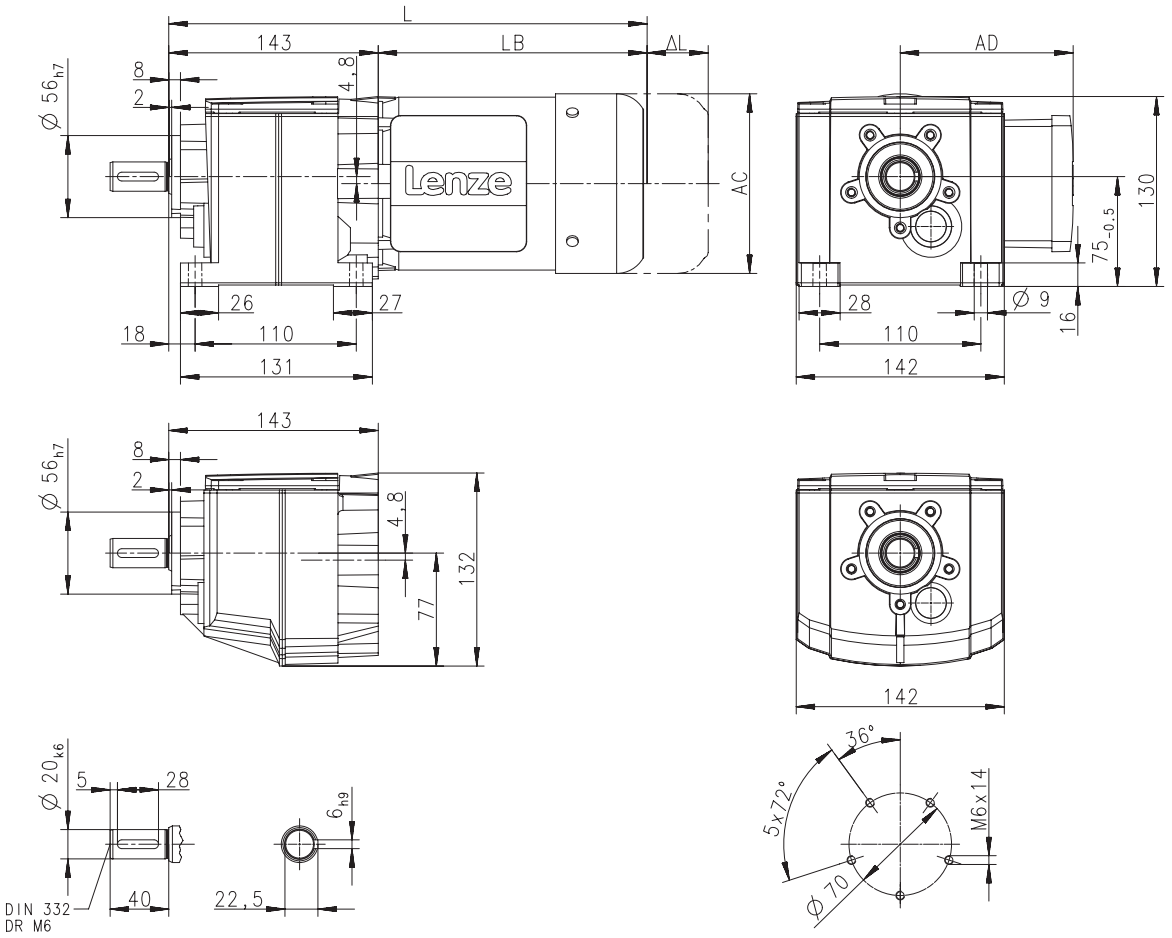

Produkt			MD□MA□□					MH□MA□□		
			063-12	063-32	063-42	071-32	071-42	080-32	090-12	090-32
Abmessungen										
Gesamtlänge	**L**	**[mm]**	326			346		369	428	
Länge Motor	**LB**	**[mm]**	183			203		226	285	
Länge Motoranbauten	**Δ L**	**[mm]**	170			165		183	181	
Motordurchmesser	**AC**	**[mm]**	123			139		156	176	
Abstand Motor/Anschluss	**AD**	**[mm]**	100			109		150	152	157



Dimensions, 4-pole motors

g500-H100

Dimensions with solid shaft and Flange

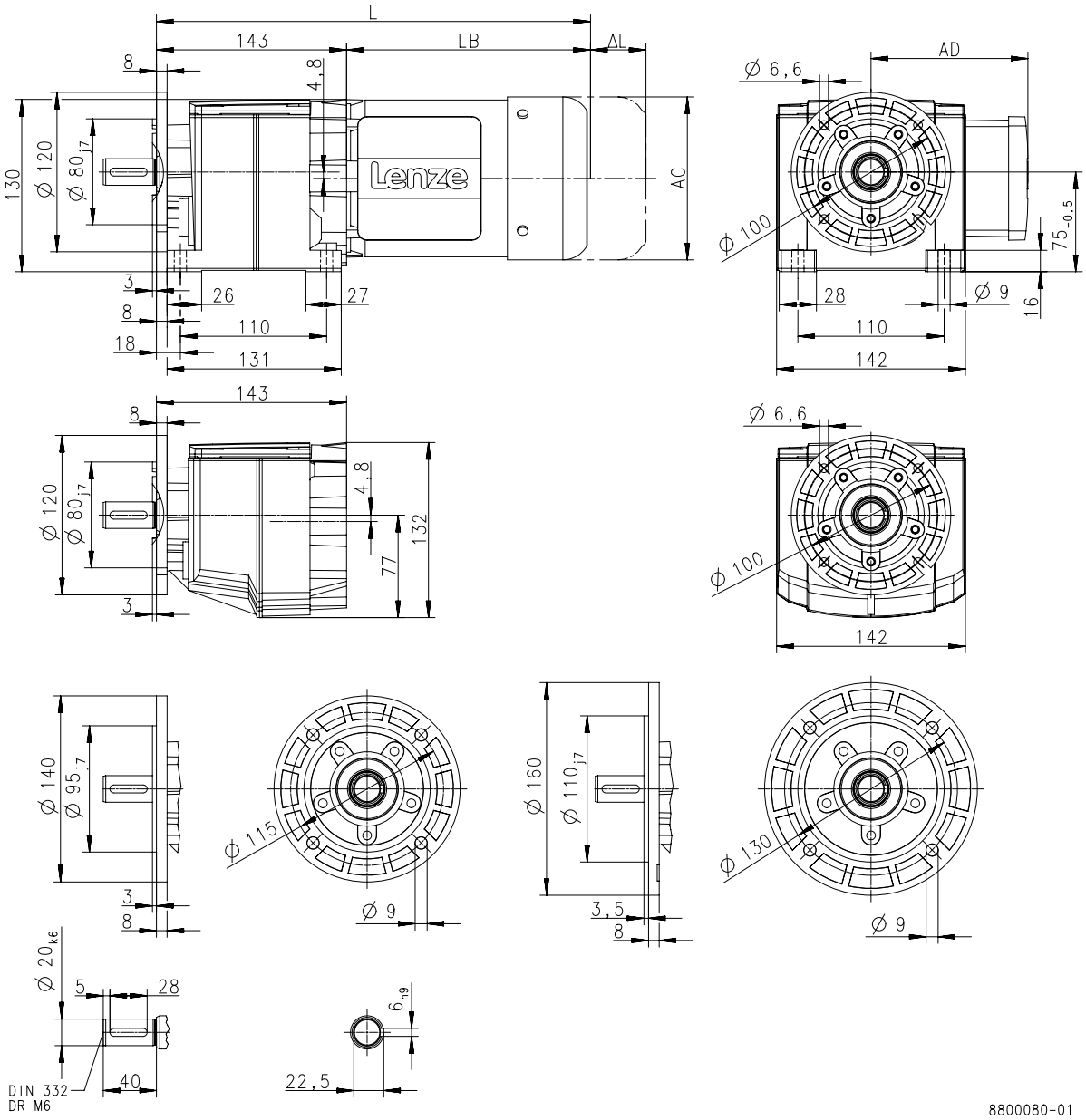

Produkt			MD□MA□□					MH□MA□□		
			063-12	063-32	063-42	071-32	071-42	080-32	090-12	090-32
Abmessungen										
Gesamtlänge	**L**	**[mm]**	326			346		369	428	
Länge Motor	**LB**	**[mm]**	183			203		226	285	
Länge Motoranbauten	**Δ L**	**[mm]**	170			165		183	181	
Motordurchmesser	**AC**	**[mm]**	123			139		156	176	
Abstand Motor/Anschluss	**AD**	**[mm]**	100			109		150	152	157



Dimensions, 4-pole motors

g500-H140

Dimensions with solid shaft

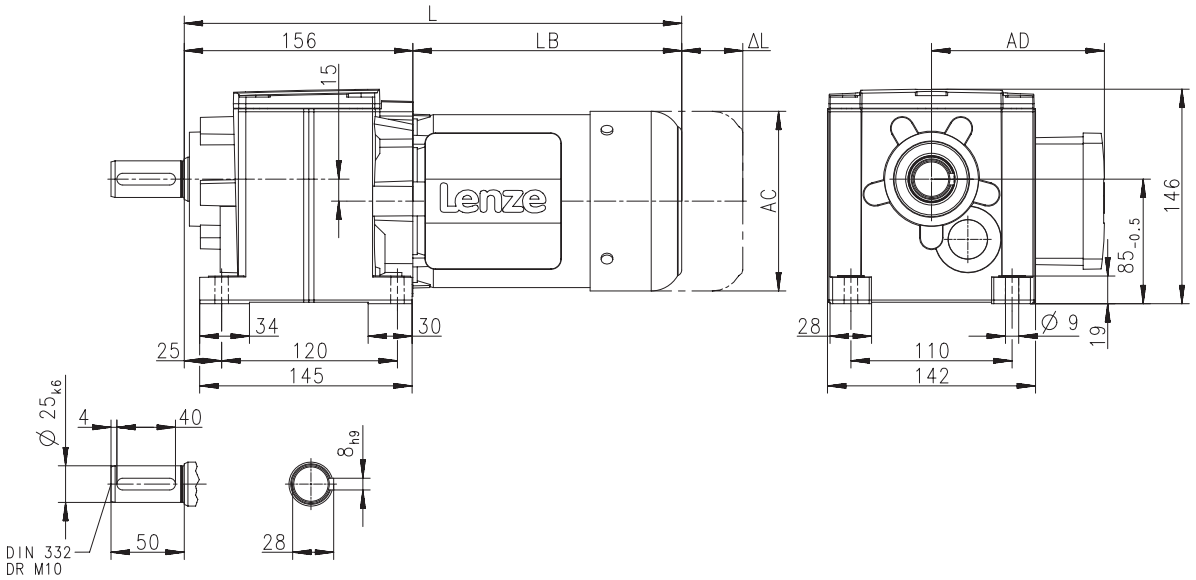

8800091-00

Produkt			MD□MA□□					MH□MA□□		
			063-12	063-32	063-42	071-32	071-42	080-32	090-12	090-32
Abmessungen										
Gesamtlänge	**L**	**[mm]**	339			359		382	441	
Länge Motor	**LB**	**[mm]**	183			203		226	285	
Länge Motoranbauten	**Δ L**	**[mm]**	170			165		183	181	
Motordurchmesser	**AC**	**[mm]**	123			139		156	176	
Abstand Motor/Anschluss	**AD**	**[mm]**	100			109		150	152	157



Dimensions, 4-pole motors

g500-H140

Dimensions with solid shaft and centering

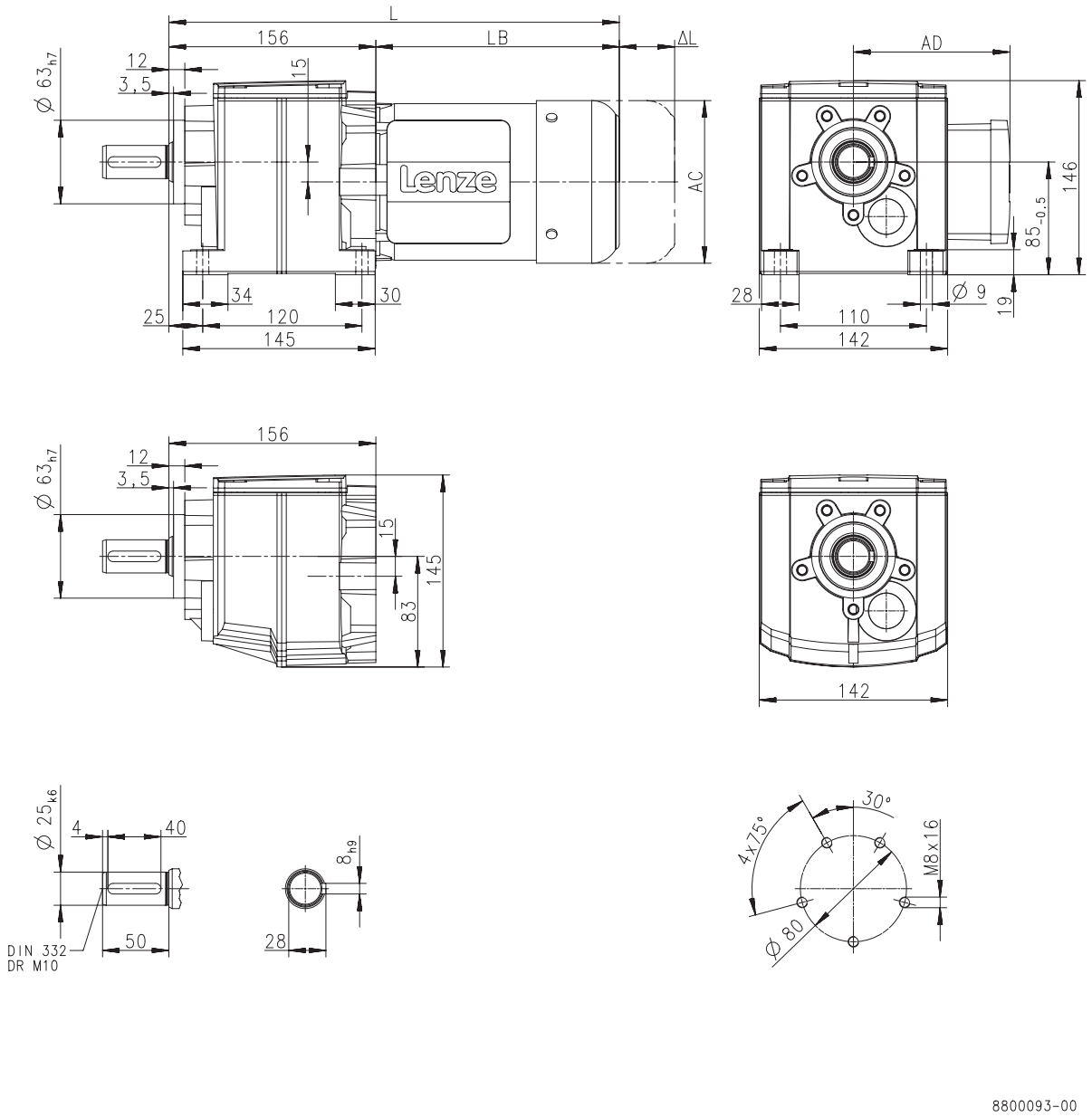

Produkt			MD□MA□□					MH□MA□□		
			063-12	063-32	063-42	071-32	071-42	080-32	090-12	090-32
Abmessungen										
Gesamtlänge	**L**	**[mm]**	339			359		382	441	
Länge Motor	**LB**	**[mm]**	183			203		226	285	
Länge Motoranbauten	**Δ L**	**[mm]**	170			165		183	181	
Motordurchmesser	**AC**	**[mm]**	123			139		156	176	
Abstand Motor/Anschluss	**AD**	**[mm]**	100			109		150	152	157



Dimensions, 4-pole motors

g500-H140

Dimensions with solid shaft

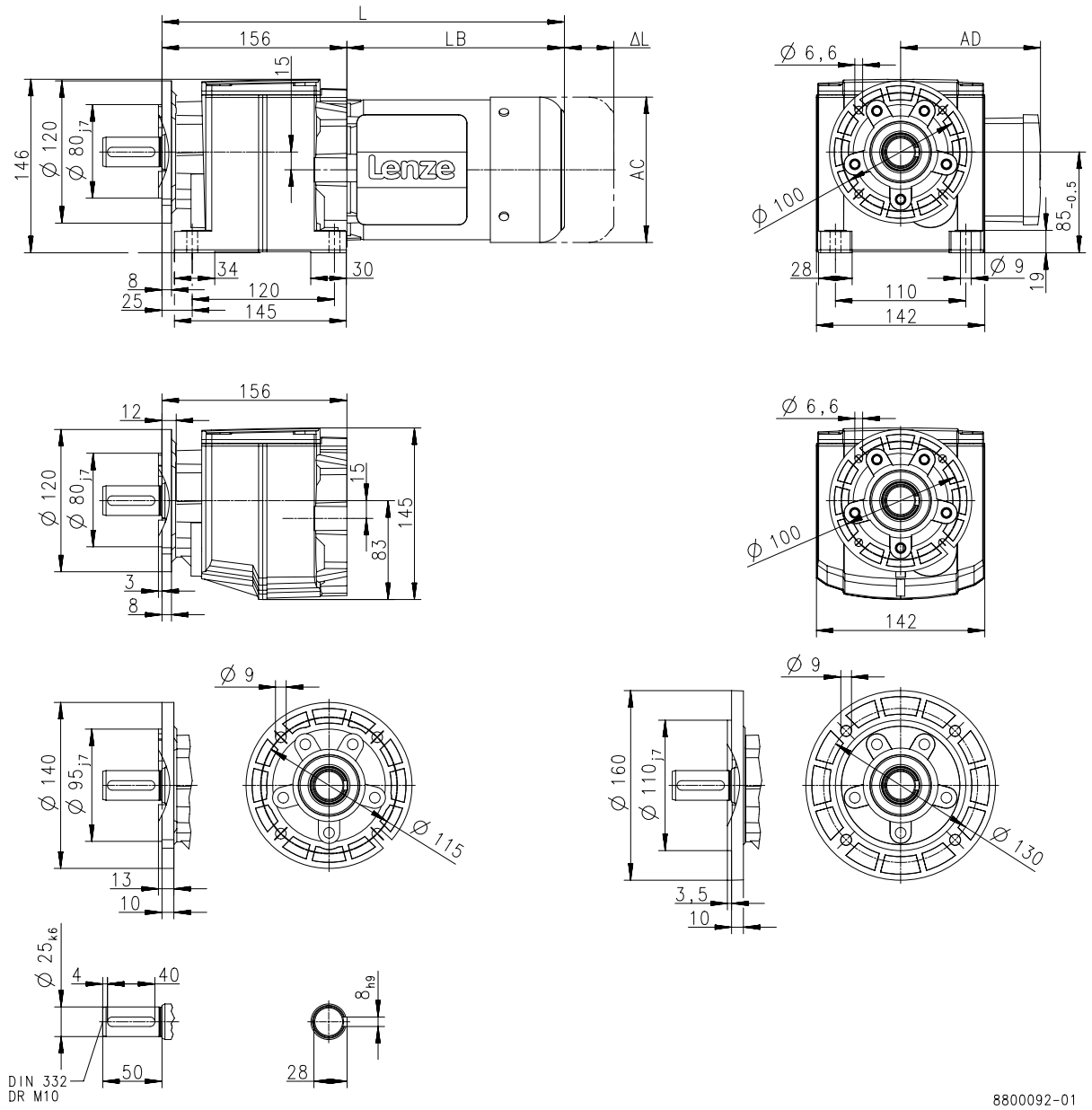

Produkt			MD□MA□□					MH□MA□□		
			063-12	063-32	063-42	071-32	071-42	080-32	090-12	090-32
Abmessungen										
Gesamtlänge	**L**	**[mm]**	339			359		382	441	
Länge Motor	**LB**	**[mm]**	183			203		226	285	
Länge Motoranbauten	**Δ L**	**[mm]**	170			165		183	181	
Motordurchmesser	**AC**	**[mm]**	123			139		156	176	
Abstand Motor/Anschluss	**AD**	**[mm]**	100			109		150	152	157



Dimensions, 4-pole motors

g500-H210

Dimensions with solid shaft

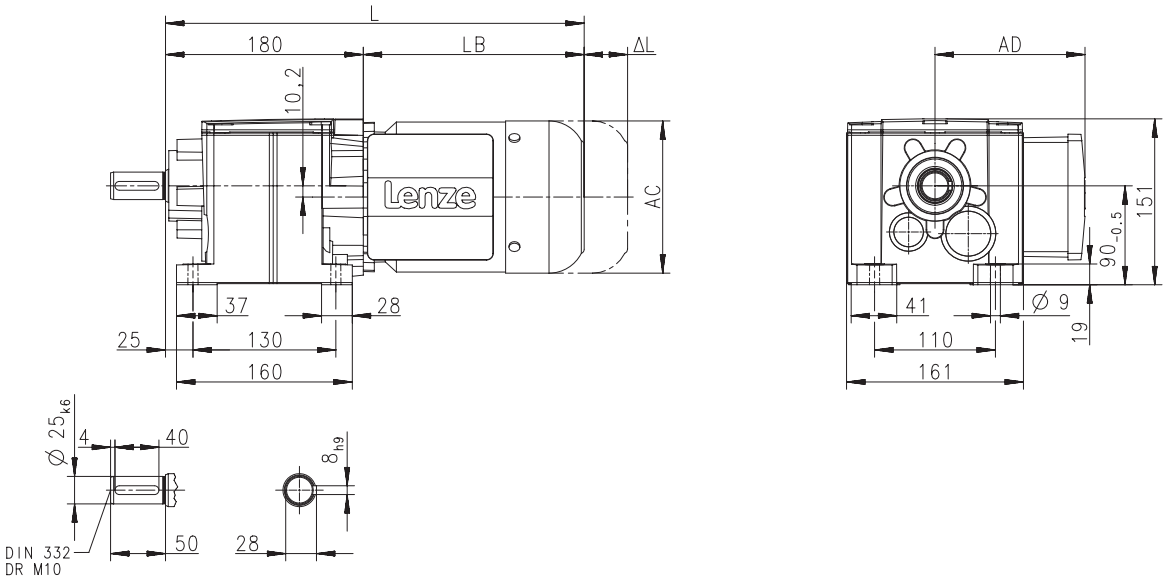

Produkt			MD□MA□□					MH□MA□□				
			063-12	063-32	063-42	071-32	071-42	080-32	090-12	090-32	100-12	100-32
Abmessungen												
Gesamtlänge	**L**	**[mm]**	363			383		406	465		501	517
Länge Motor	**LB**	**[mm]**	183			203		226	285		321	337
Länge Motoranbauten	**Δ L**	**[mm]**	170			165		183	181		170	
Motordurchmesser	**AC**	**[mm]**	123			139		156	176		194	
Abstand Motor/Anschluss	**AD**	**[mm]**	100			109		150	152	157	166	



Dimensions, 4-pole motors

g500-H210

Dimensions with solid shaft and centering

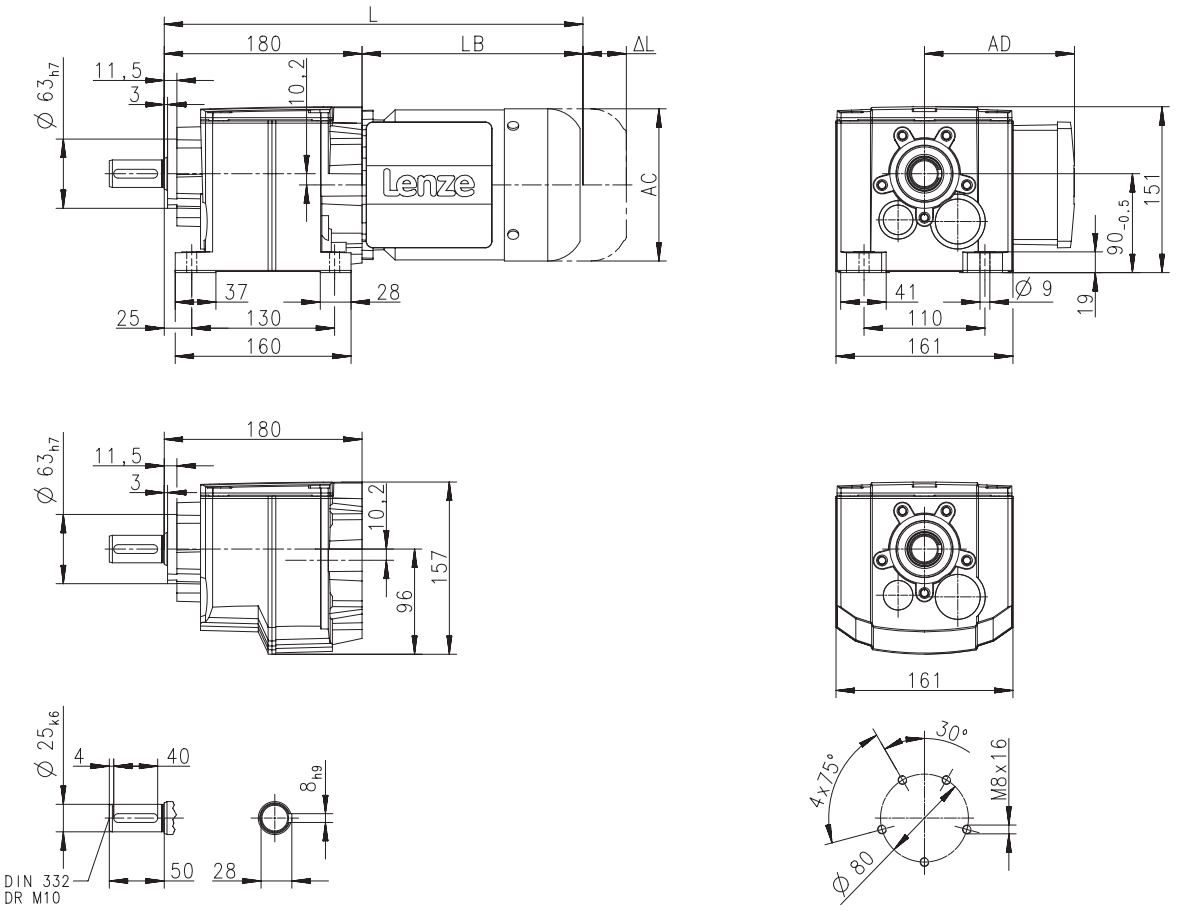

Produkt			MD□MA□□					MH□MA□□				
			063-12	063-32	063-42	071-32	071-42	080-32	090-12	090-32	100-12	100-32
Abmessungen												
Gesamtlänge	**L**	**[mm]**	363			383		406	465		501	517
Länge Motor	**LB**	**[mm]**	183			203		226	285		321	337
Länge Motoranbauten	**Δ L**	**[mm]**	170			165		183	181		170	
Motordurchmesser	**AC**	**[mm]**	123			139		156	176		194	
Abstand Motor/Anschluss	**AD**	**[mm]**	100			109		150	152	157	166	



Dimensions, 4-pole motors

g500-H210

Dimensions with solid shaft and Flange

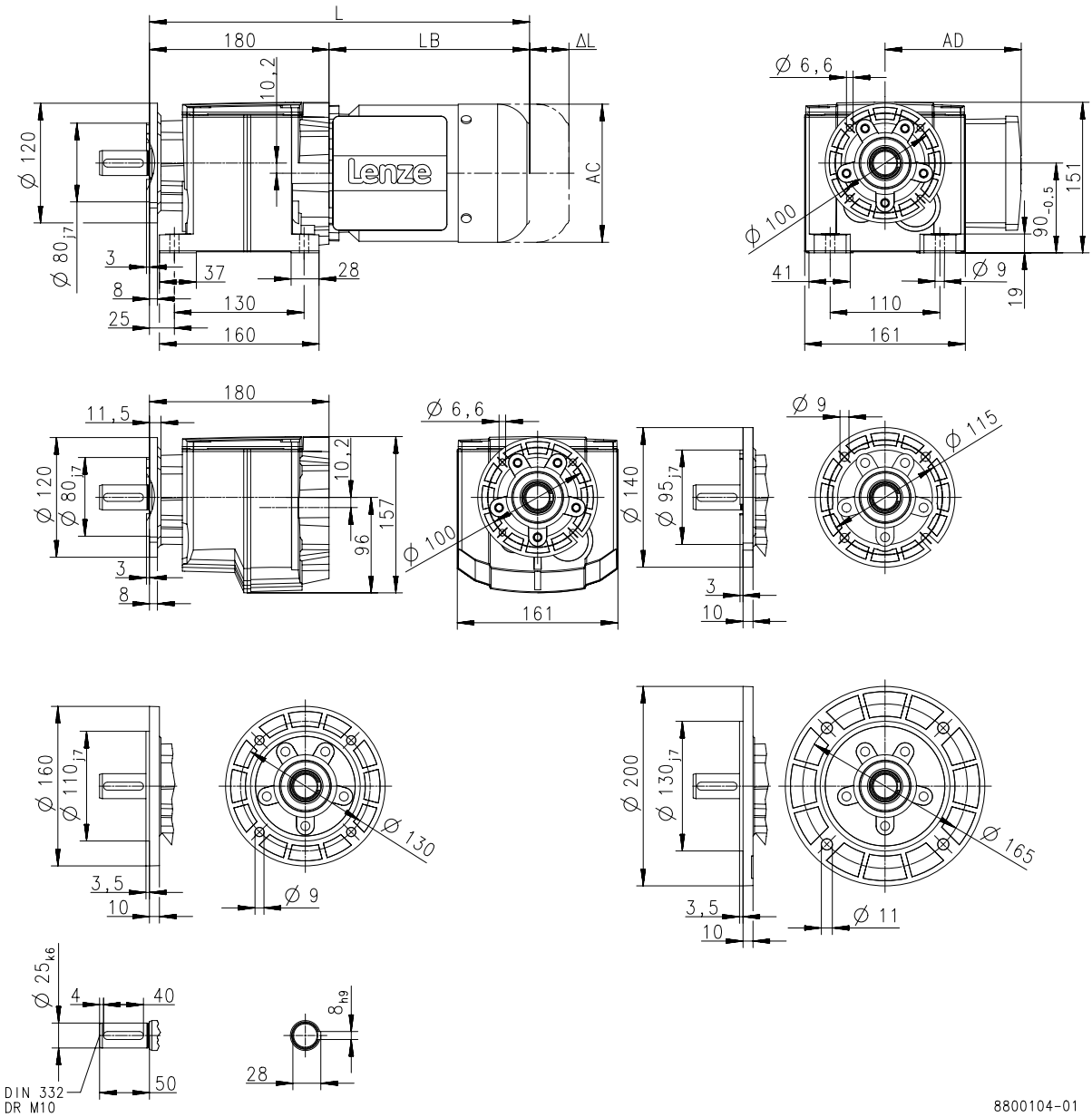

Produkt			MD□MA□□					MH□MA□□				
			063-12	063-32	063-42	071-32	071-42	080-32	090-12	090-32	100-12	100-32
Abmessungen												
Gesamtlänge	**L**	**[mm]**	363			383		406	465		501	517
Länge Motor	**LB**	**[mm]**	183			203		226	285		321	337
Länge Motoranbauten	**Δ L**	**[mm]**	170			165		183	181		170	
Motordurchmesser	**AC**	**[mm]**	123			139		156	176		194	
Abstand Motor/Anschluss	**AD**	**[mm]**	100			109		150	152	157	166	



Dimensions, 4-pole motors

g500-H320

Dimensions with solid shaft

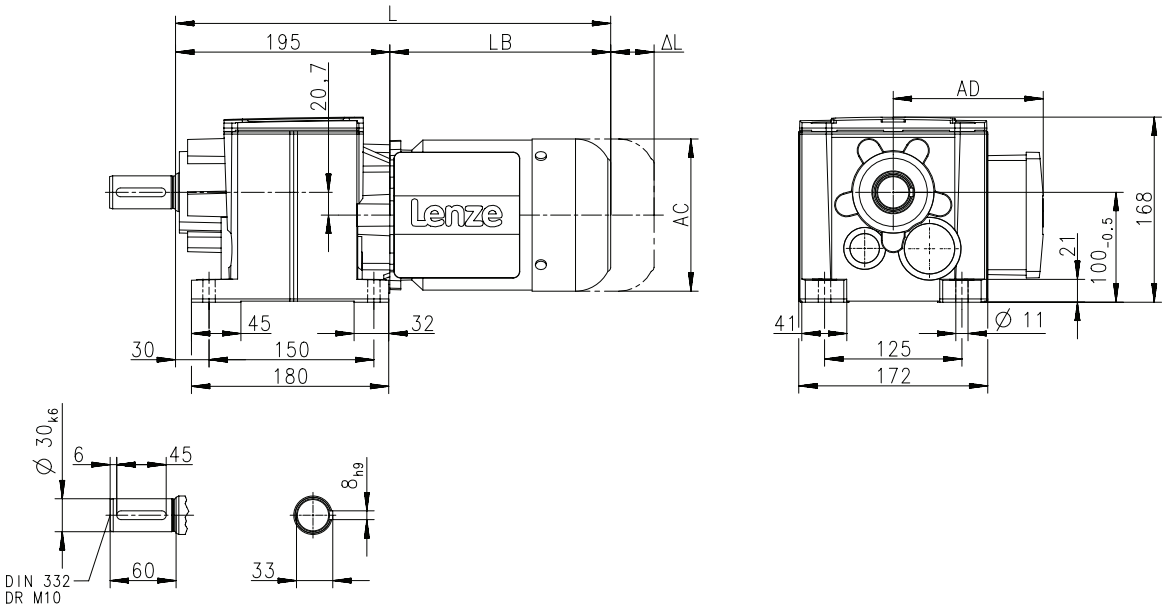

Produkt			MD□MA□□					MH□MA□□					
			063-12	063-32	063-42	071-32	071-42	080-32	090-12	090-32	100-12	100-32	112-22
Abmessungen													
Gesamtlänge	**L**	**[mm]**	383			403		426	485		521	537	580
Länge Motor	**LB**	**[mm]**	183			203		226	285		321	337	380
Länge Motoranbauten	**Δ L**	**[mm]**	170			165		183	181		170		183
Motordurchmesser	**AC**	**[mm]**	123			139		156	176		194		218
Abstand Motor/Anschluss	**AD**	**[mm]**	100			109		150	152	157	166		176



Dimensions, 4-pole motors

g500-H320

Dimensions with solid shaft and centering

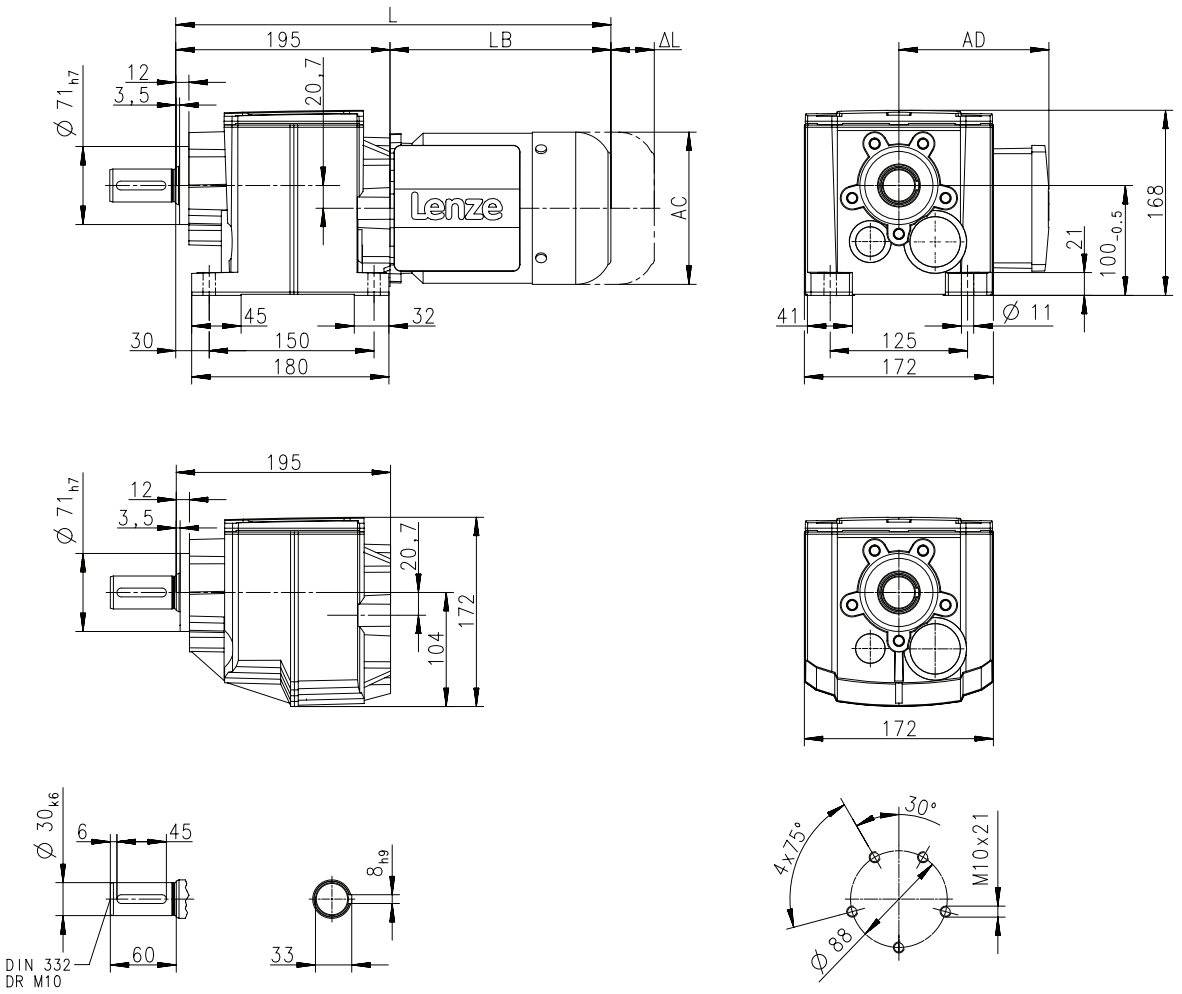

Produkt			MD□MA□□					MH□MA□□					
			063-12	063-32	063-42	071-32	071-42	080-32	090-12	090-32	100-12	100-32	112-22
Abmessungen													
Gesamtlänge	**L**	**[mm]**	383			403		426	485		521	537	580
Länge Motor	**LB**	**[mm]**	183			203		226	285		321	337	380
Länge Motoranbauten	**Δ L**	**[mm]**	170			165		183	181		170		183
Motordurchmesser	**AC**	**[mm]**	123			139		156	176		194		218
Abstand Motor/Anschluss	**AD**	**[mm]**	100			109		150	152	157	166		176



Dimensions, 4-pole motors

g500-H320

Dimensions with solid shaft and Flange

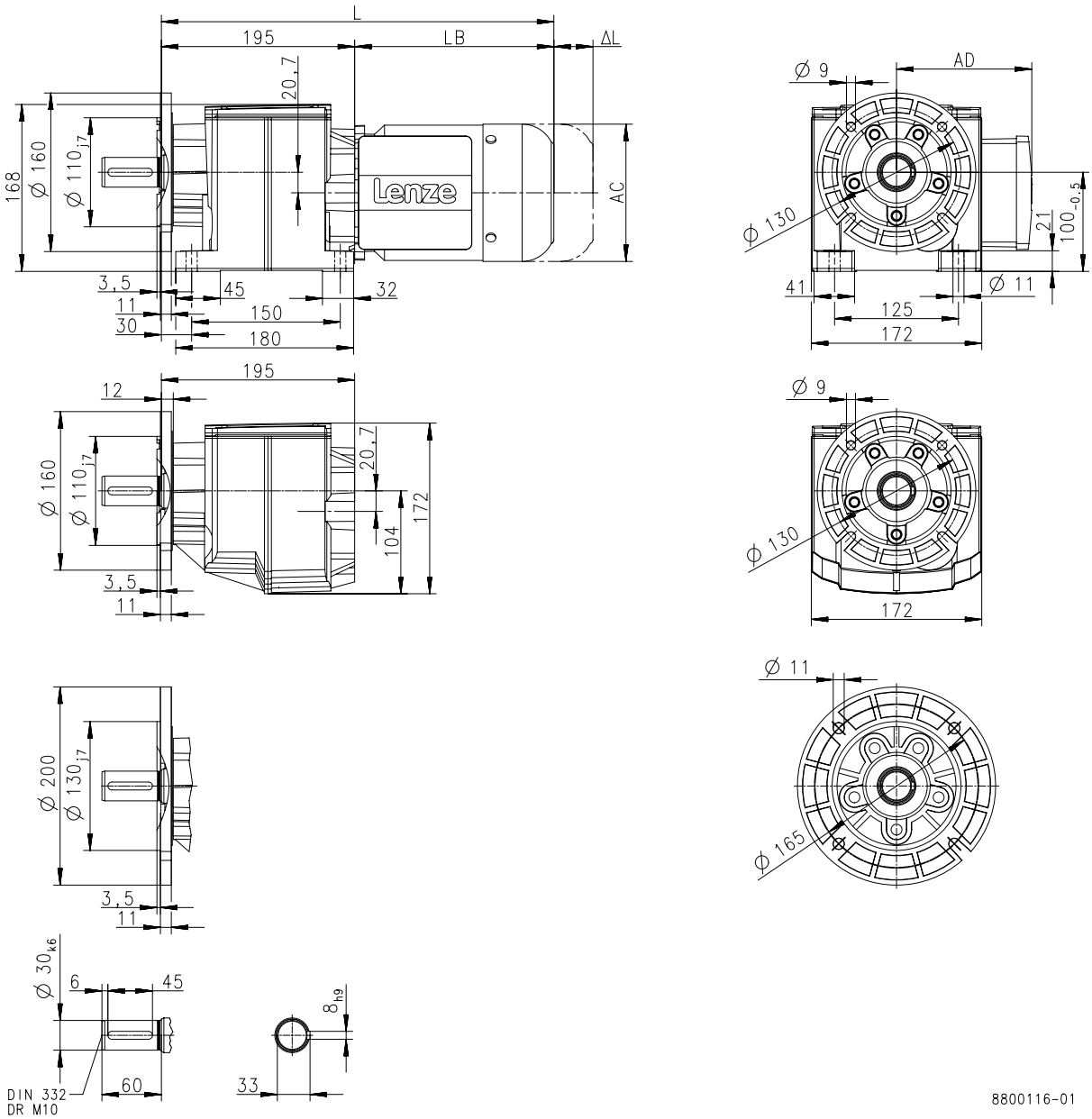

Produkt			MD□MA□□					MH□MA□□					
			063-12	063-32	063-42	071-32	071-42	080-32	090-12	090-32	100-12	100-32	112-22
Abmessungen													
Gesamtlänge	**L**	**[mm]**	383			403		426	485		521	537	580
Länge Motor	**LB**	**[mm]**	183			203		226	285		321	337	380
Länge Motoranbauten	**Δ L**	**[mm]**	170			165		183	181		170		183
Motordurchmesser	**AC**	**[mm]**	123			139		156	176		194		218
Abstand Motor/Anschluss	**AD**	**[mm]**	100			109		150	152	157	166		176



Dimensions, 4-pole motors

g500-H450

Dimensions with solid shaft

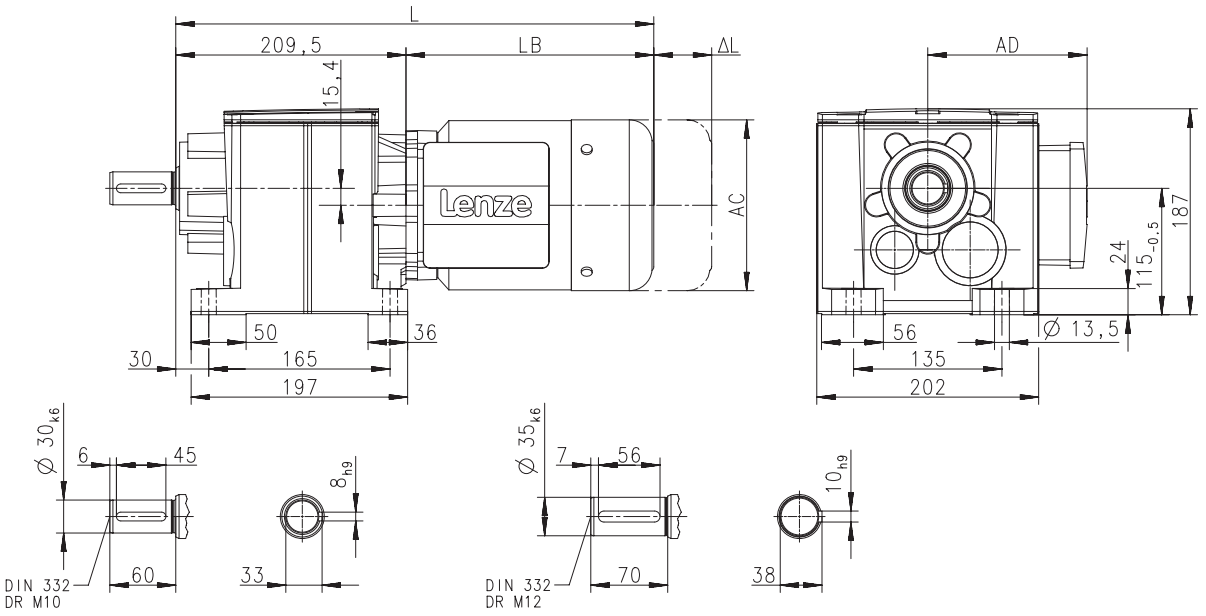

8800127-00

Produkt			MD□MA□□					MH□MA□□
			063-12	063-32	063-42	071-32	071-42	080-32
Abmessungen								
Gesamtlänge	**L**	**[mm]**	393			413		436
Länge Motor	**LB**	**[mm]**	183			203		226
Länge Motoranbauten	**Δ L**	**[mm]**	170			165		183
Motordurchmesser	**AC**	**[mm]**	123			139		156
Abstand Motor/Anschluss	**AD**	**[mm]**	100			109		150



Dimensions, 4-pole motors

g500-H450

Dimensions with solid shaft

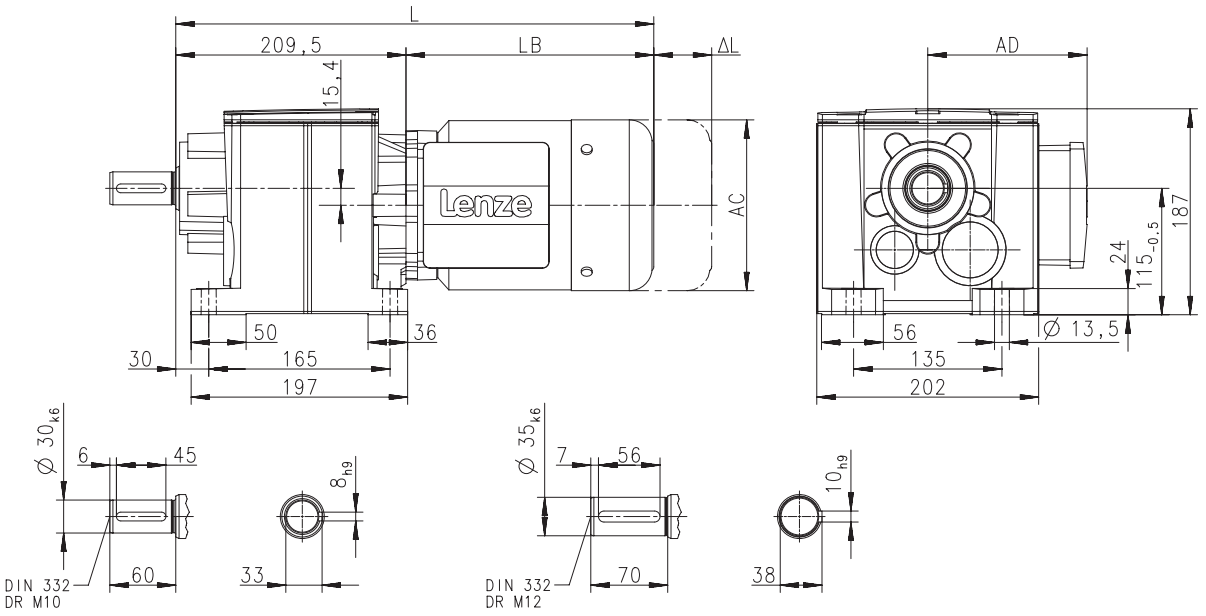

Produkt			MH□MA□□						
			090-12	090-32	100-12	100-32	112-22	132-12	132-22
Abmessungen									
Gesamtlänge	**L**	**[mm]**	495		531	547	590	638	
Länge Motor	**LB**	**[mm]**	285		321	337	380	428	
Länge Motoranbauten	**Δ L**	**[mm]**	181		170		183	202	
Motordurchmesser	**AC**	**[mm]**	176		194		218	258	
Abstand Motor/Anschluss	**AD**	**[mm]**	152	157	166		176	195	



Dimensions, 4-pole motors

g500-H450

Dimensions with solid shaft and centering

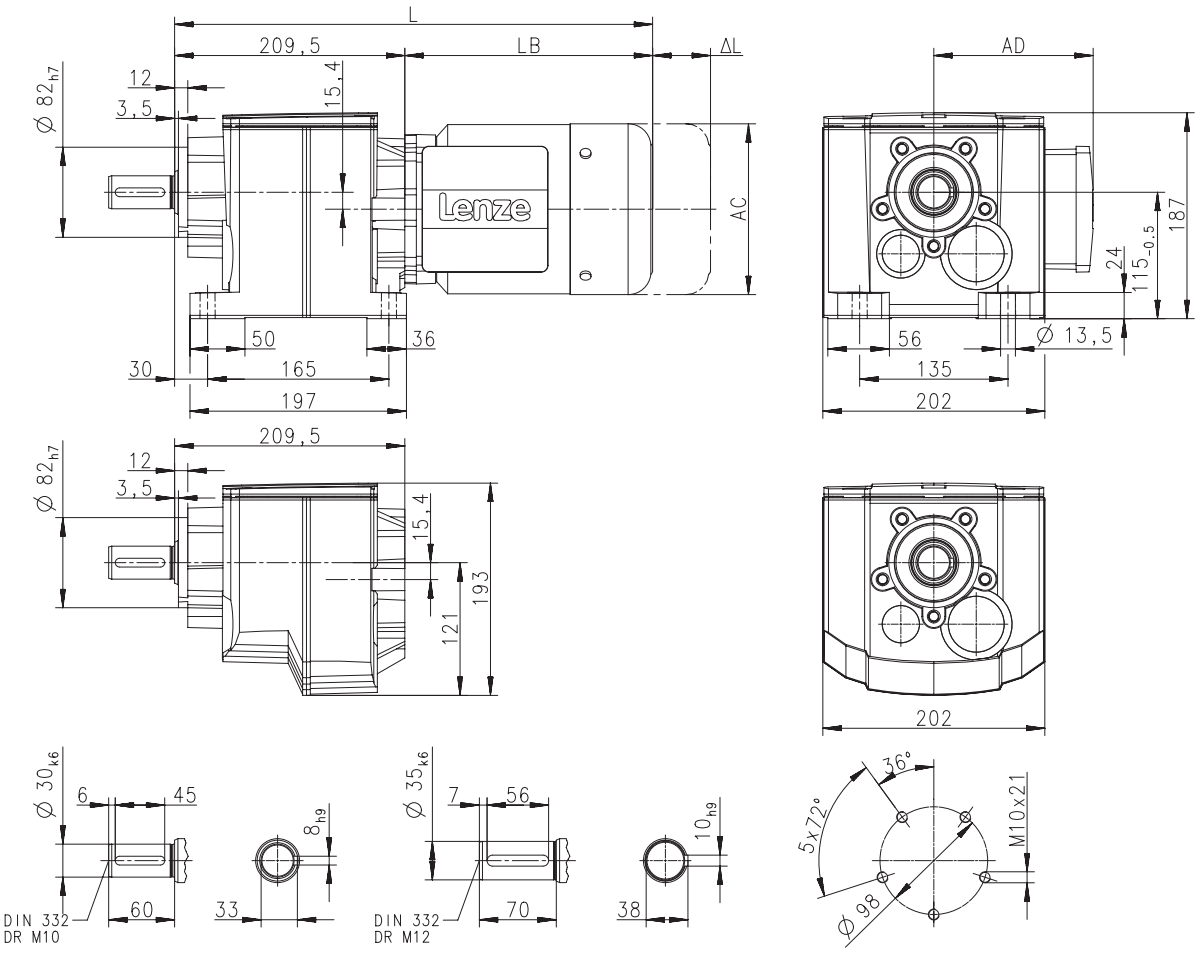

Produkt			MD□MA□□					MH□MA□□
			063-12	063-32	063-42	071-32	071-42	080-32
Abmessungen								
Gesamtlänge	**L**	**[mm]**	393			413		436
Länge Motor	**LB**	**[mm]**	183			203		226
Länge Motoranbauten	**Δ L**	**[mm]**	170			165		183
Motordurchmesser	**AC**	**[mm]**	123			139		156
Abstand Motor/Anschluss	**AD**	**[mm]**	100			109		150



Dimensions, 4-pole motors

g500-H450

Dimensions with solid shaft and centering

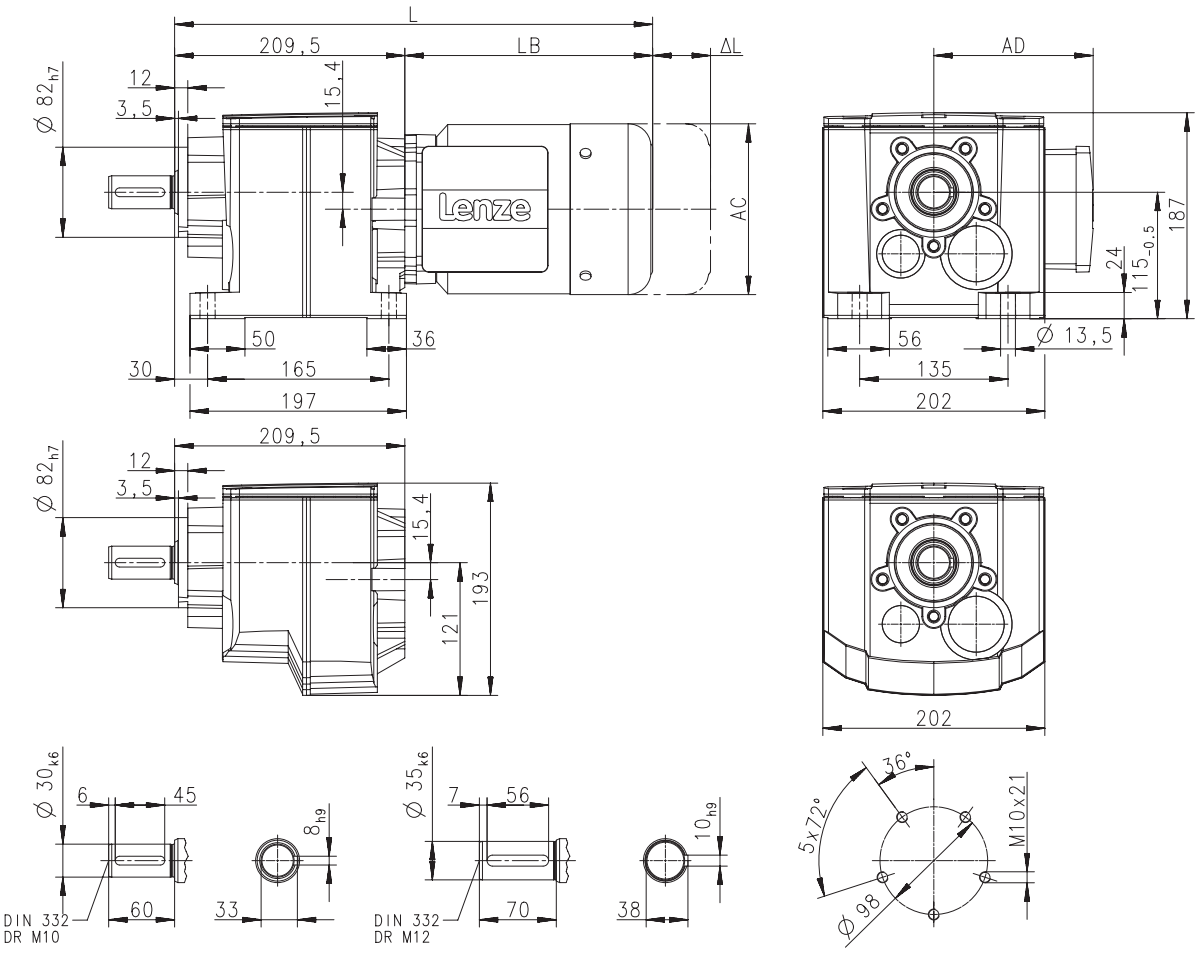

8800129-00

Produkt			MH□MA□□						
			090-12	090-32	100-12	100-32	112-22	132-12	132-22
Abmessungen									
Gesamtlänge	**L**	**[mm]**	495		531	547	590	638	
Länge Motor	**LB**	**[mm]**	285		321	337	380	428	
Länge Motoranbauten	**Δ L**	**[mm]**	181		170		183	202	
Motordurchmesser	**AC**	**[mm]**	176		194		218	258	
Abstand Motor/Anschluss	**AD**	**[mm]**	152	157	166		176	195	



Dimensions, 4-pole motors

g500-H450

Dimensions with solid shaft and Flange

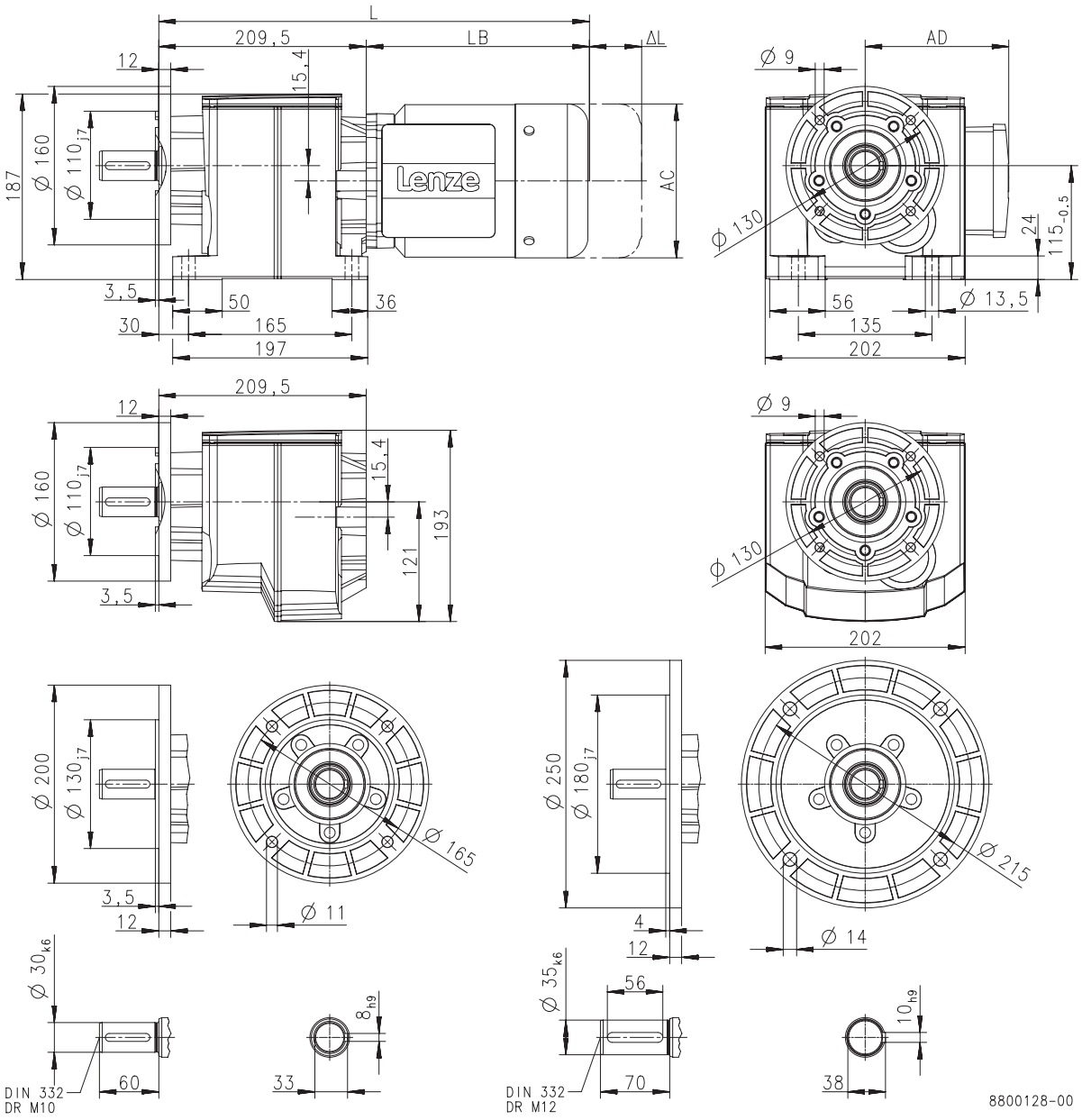

Produkt			MD□MA□□					MH□MA□□
			063-12	063-32	063-42	071-32	071-42	080-32
Abmessungen								
Gesamtlänge	**L**	**[mm]**	393			413		436
Länge Motor	**LB**	**[mm]**	183			203		226
Länge Motoranbauten	**Δ L**	**[mm]**	170			165		183
Motordurchmesser	**AC**	**[mm]**	123			139		156
Abstand Motor/Anschluss	**AD**	**[mm]**	100			109		150



Dimensions, 4-pole motors

g500-H450

Dimensions with solid shaft and Flange

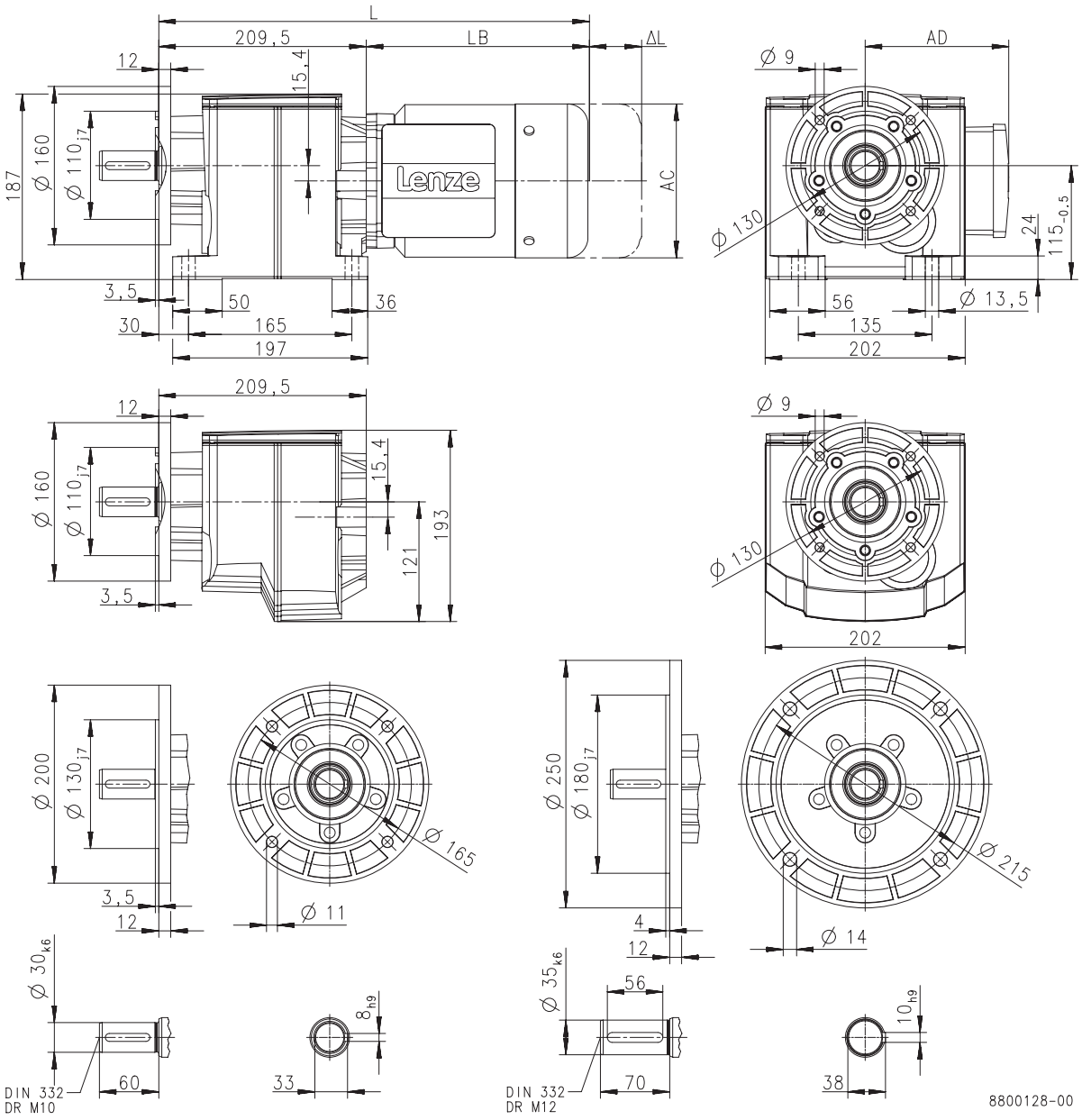

Produkt			MH□MA□□						
			090-12	090-32	100-12	100-32	112-22	132-12	132-22
Abmessungen									
Gesamtlänge	**L**	**[mm]**	495		531	547	590	638	
Länge Motor	**LB**	**[mm]**	285		321	337	380	428	
Länge Motoranbauten	**Δ L**	**[mm]**	181		170		183	202	
Motordurchmesser	**AC**	**[mm]**	176		194		218	258	
Abstand Motor/Anschluss	**AD**	**[mm]**	152	157	166		176	195	



Dimensions, 2-pole motors

g500-H100

Dimensions with solid shaft

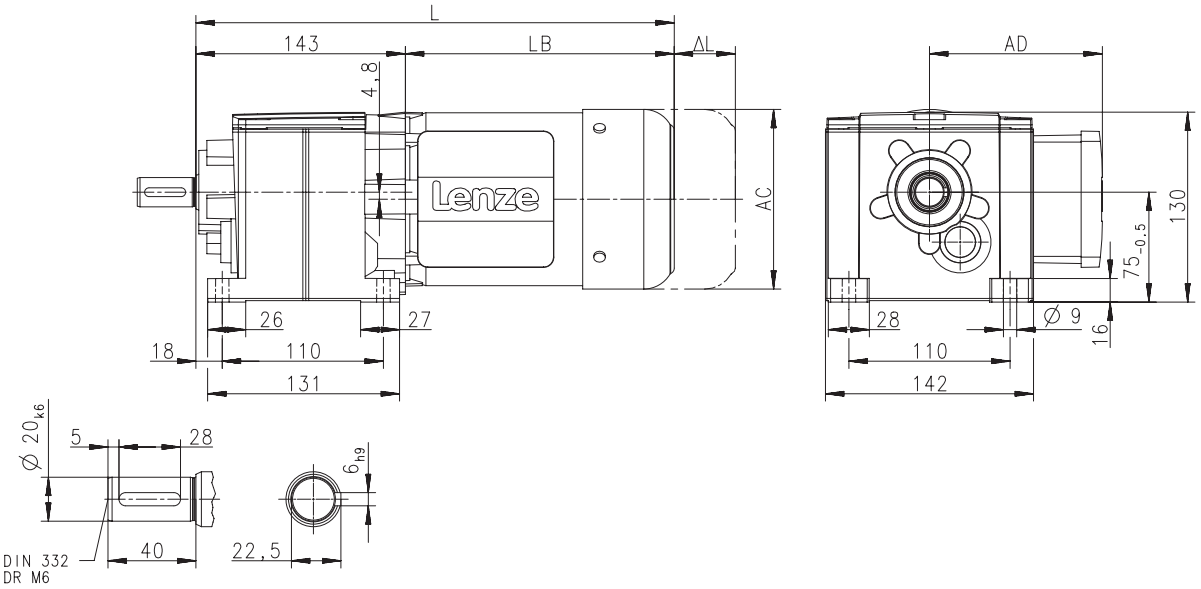

Produkt			MD□MA□□			
			063-11	063-31	071-11	071-31
Abmessungen						
Gesamtlänge	**L**	**[mm]**	326		346	
Länge Motor	**LB**	**[mm]**	183		203	
Länge Motoranbauten	**Δ L**	**[mm]**	170		165	
Motordurchmesser	**AC**	**[mm]**	123		139	
Abstand Motor/Anschluss	**AD**	**[mm]**	100		109	



Dimensions, 2-pole motors

g500-H100

Dimensions with solid shaft and centering

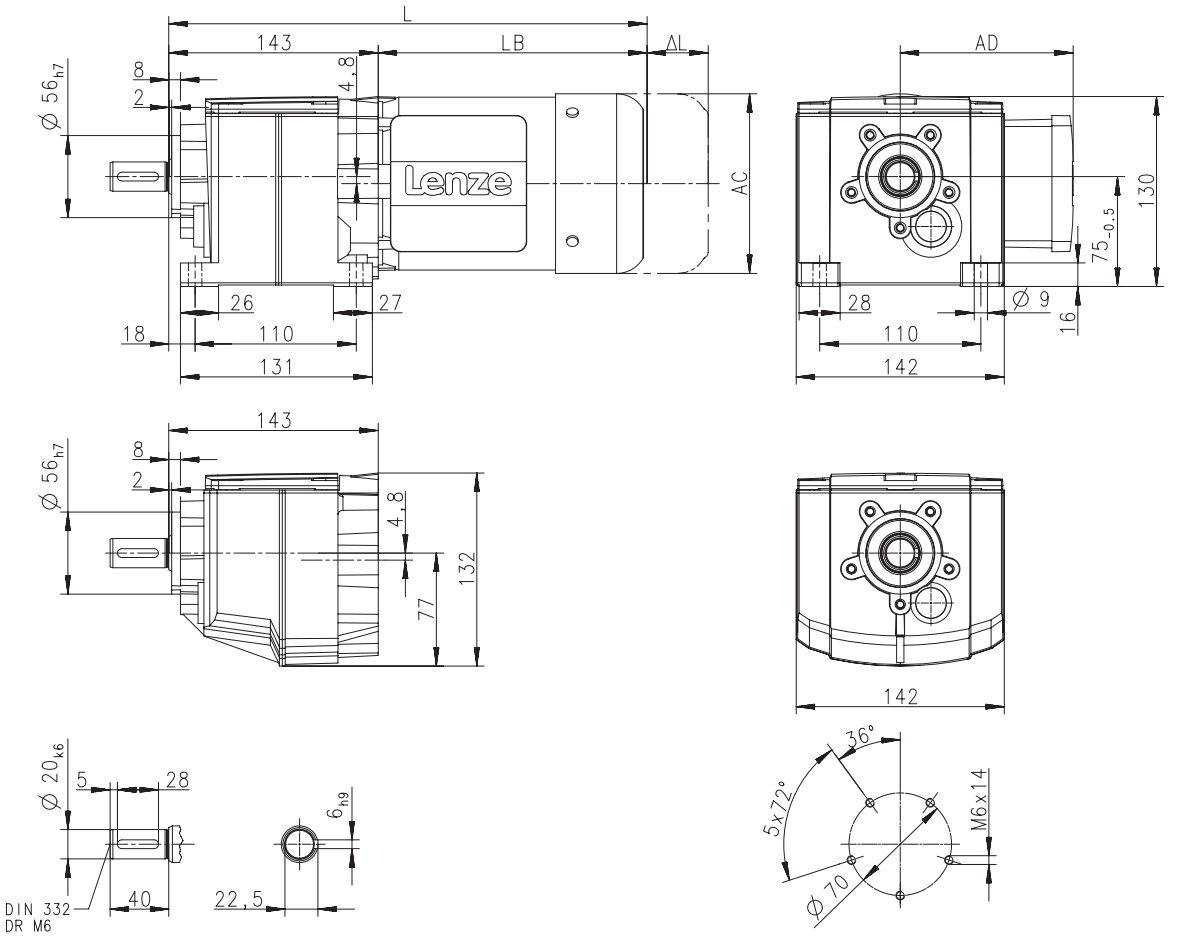

Produkt			MD□MA□□			
			063-11	063-31	071-11	071-31
Abmessungen						
Gesamtlänge	**L**	**[mm]**	326		346	
Länge Motor	**LB**	**[mm]**	183		203	
Länge Motoranbauten	**Δ L**	**[mm]**	170		165	
Motordurchmesser	**AC**	**[mm]**	123		139	
Abstand Motor/Anschluss	**AD**	**[mm]**	100		109	



Dimensions, 2-pole motors

g500-H100

Dimensions with solid shaft and Flange

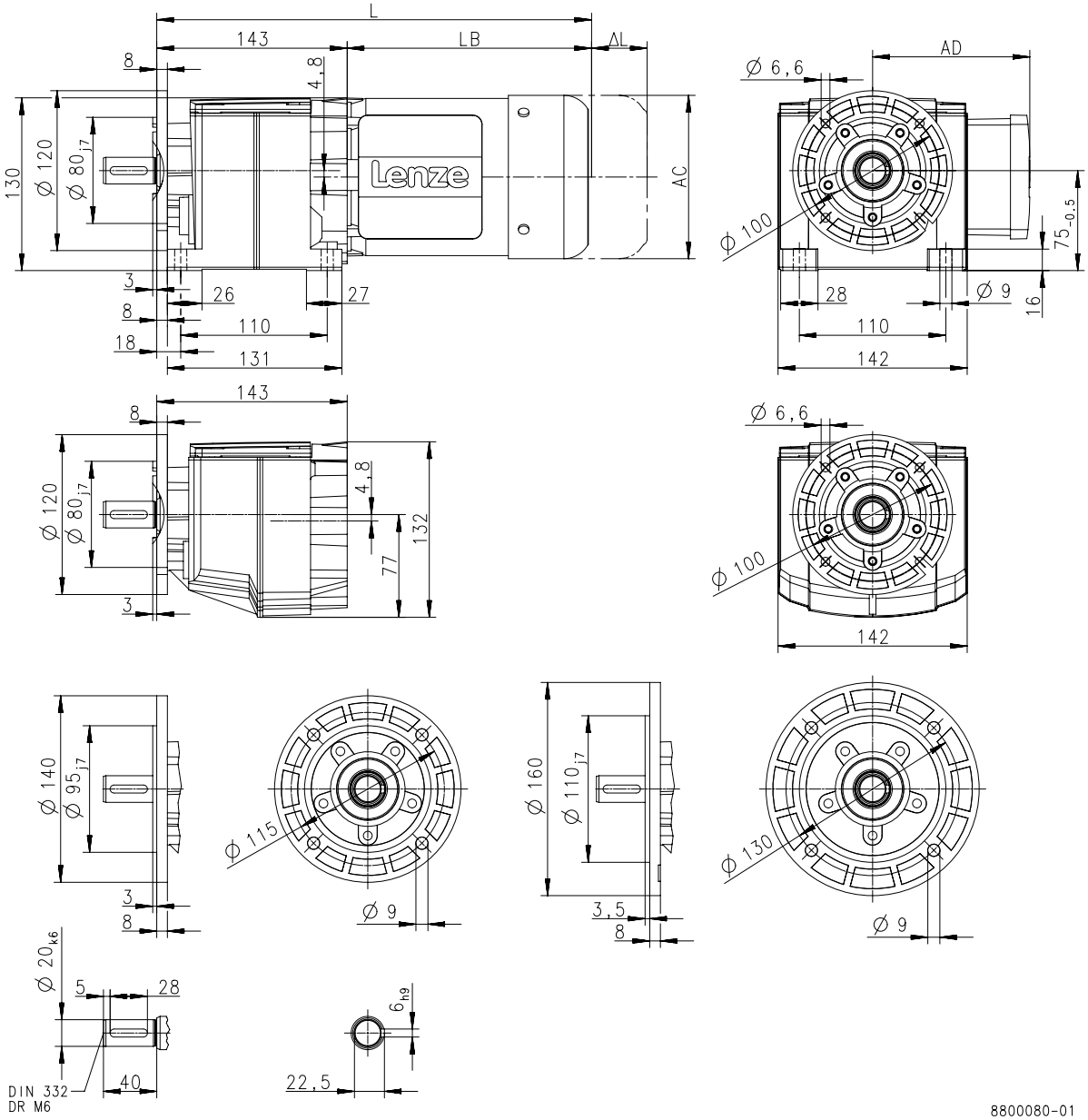

Produkt			MD□MA□□			
			063-11	063-31	071-11	071-31
Abmessungen						
Gesamtlänge	**L**	**[mm]**	326		346	
Länge Motor	**LB**	**[mm]**	183		203	
Länge Motoranbauten	**Δ L**	**[mm]**	170		165	
Motordurchmesser	**AC**	**[mm]**	123		139	
Abstand Motor/Anschluss	**AD**	**[mm]**	100		109	



Dimensions, 2-pole motors

g500-H140

Dimensions with solid shaft

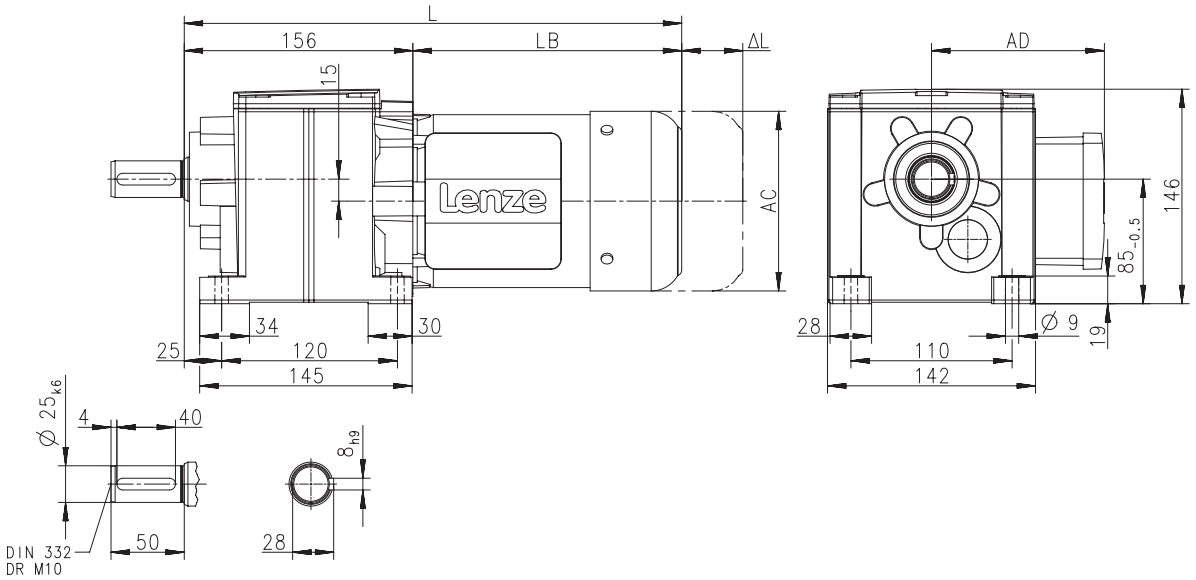

8800091-00

Produkt			MD□MA□□			
			063-11	063-31	071-11	071-31
Abmessungen						
Gesamtlänge	**L**	**[mm]**	339		359	
Länge Motor	**LB**	**[mm]**	183		203	
Länge Motoranbauten	**Δ L**	**[mm]**	170		165	
Motordurchmesser	**AC**	**[mm]**	123		139	
Abstand Motor/Anschluss	**AD**	**[mm]**	100		109	



Dimensions, 2-pole motors

g500-H140

Dimensions with solid shaft and centering

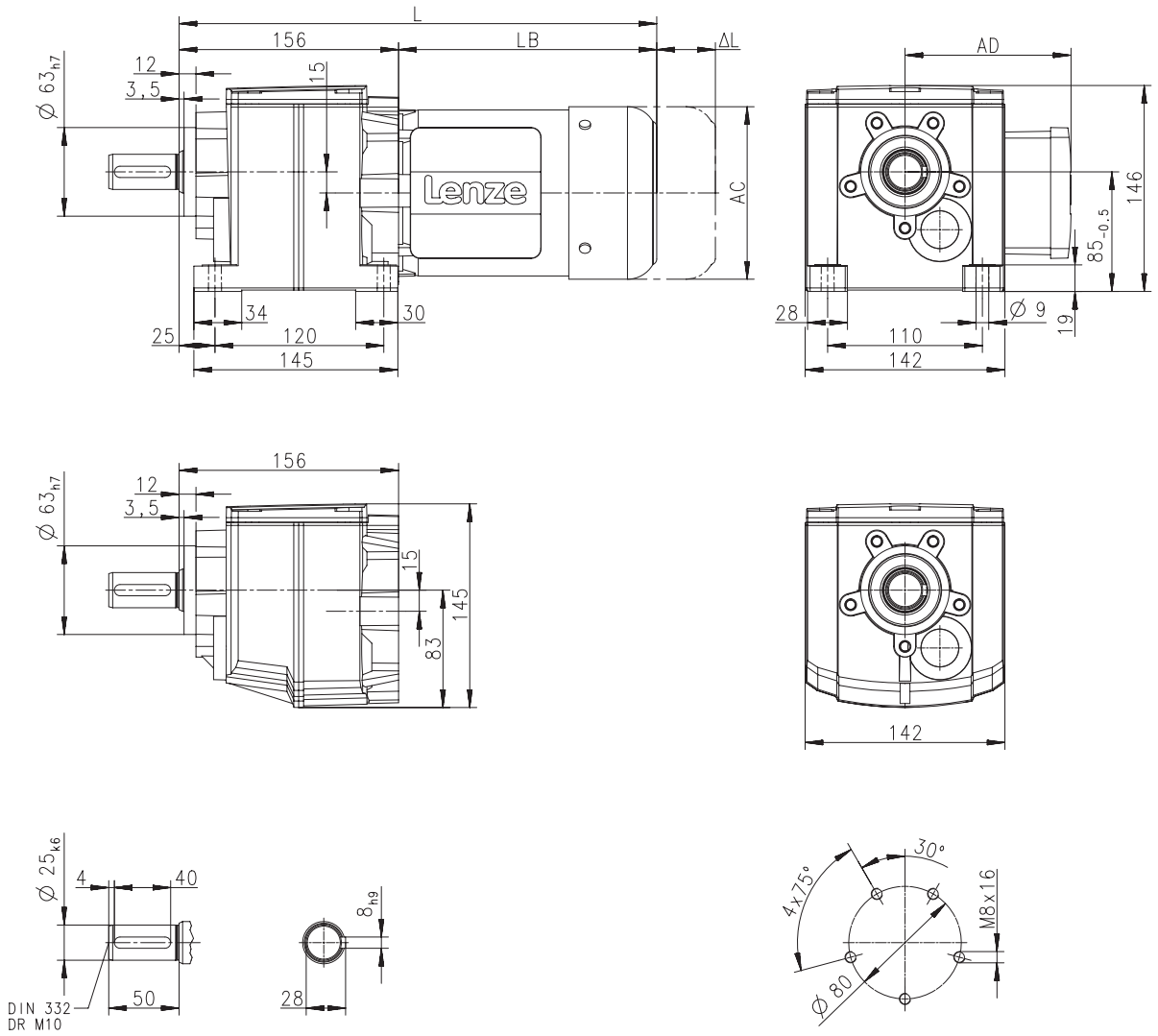

Produkt			MD□MA□□			
			063-11	063-31	071-11	071-31
Abmessungen						
Gesamtlänge	**L**	**[mm]**	339		359	
Länge Motor	**LB**	**[mm]**	183		203	
Länge Motoranbauten	**Δ L**	**[mm]**	170		165	
Motordurchmesser	**AC**	**[mm]**	123		139	
Abstand Motor/Anschluss	**AD**	**[mm]**	100		109	



Dimensions, 2-pole motors

g500-H140

Dimensions with solid shaft and Flange

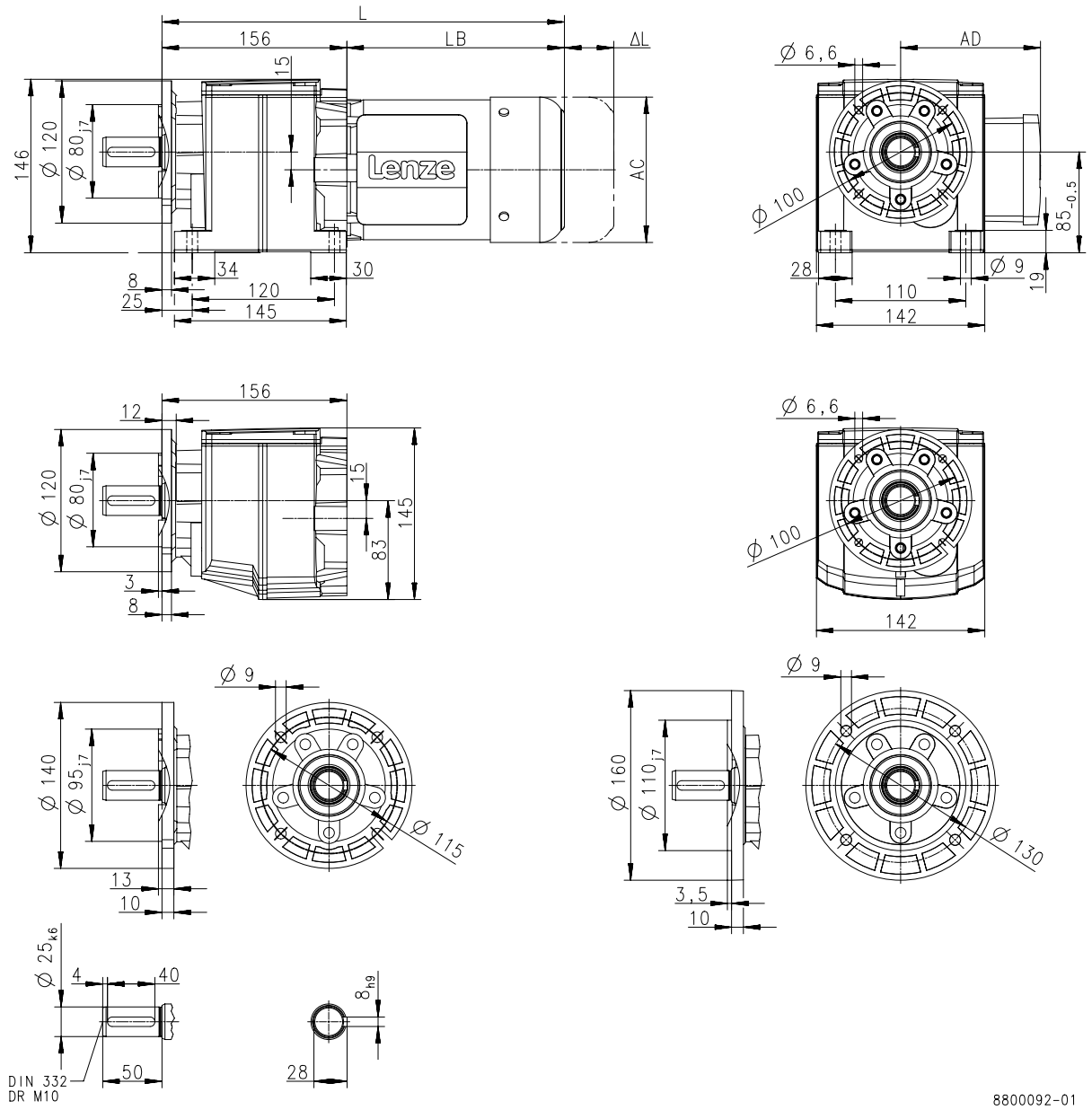

Produkt			MD□MA□□			
			063-11	063-31	071-11	071-31
Abmessungen						
Gesamtlänge	**L**	**[mm]**	339		359	
Länge Motor	**LB**	**[mm]**	183		203	
Länge Motoranbauten	**Δ L**	**[mm]**	170		165	
Motordurchmesser	**AC**	**[mm]**	123		139	
Abstand Motor/Anschluss	**AD**	**[mm]**	100		109	



Dimensions, 2-pole motors

g500-H210

Dimensions with solid shaft

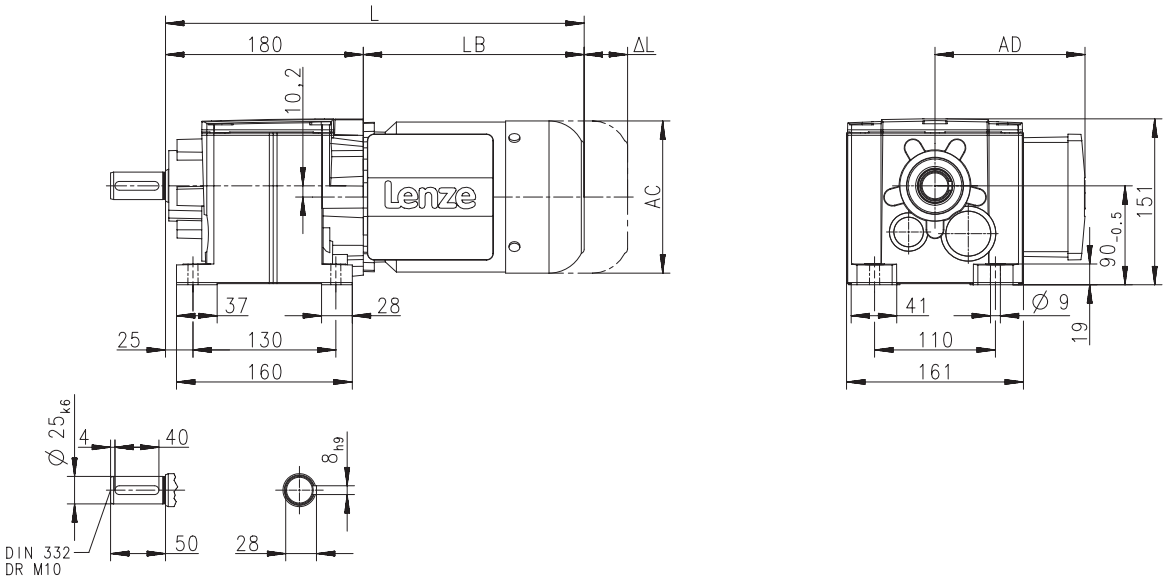

Produkt			MD□MA□□			
			063-11	063-31	071-11	071-31
Abmessungen						
Gesamtlänge	**L**	**[mm]**	363		383	
Länge Motor	**LB**	**[mm]**	183		203	
Länge Motoranbauten	**Δ L**	**[mm]**	170		165	
Motordurchmesser	**AC**	**[mm]**	123		139	
Abstand Motor/Anschluss	**AD**	**[mm]**	100		109	



Dimensions, 2-pole motors

g500-H210

Dimensions with solid shaft and centering

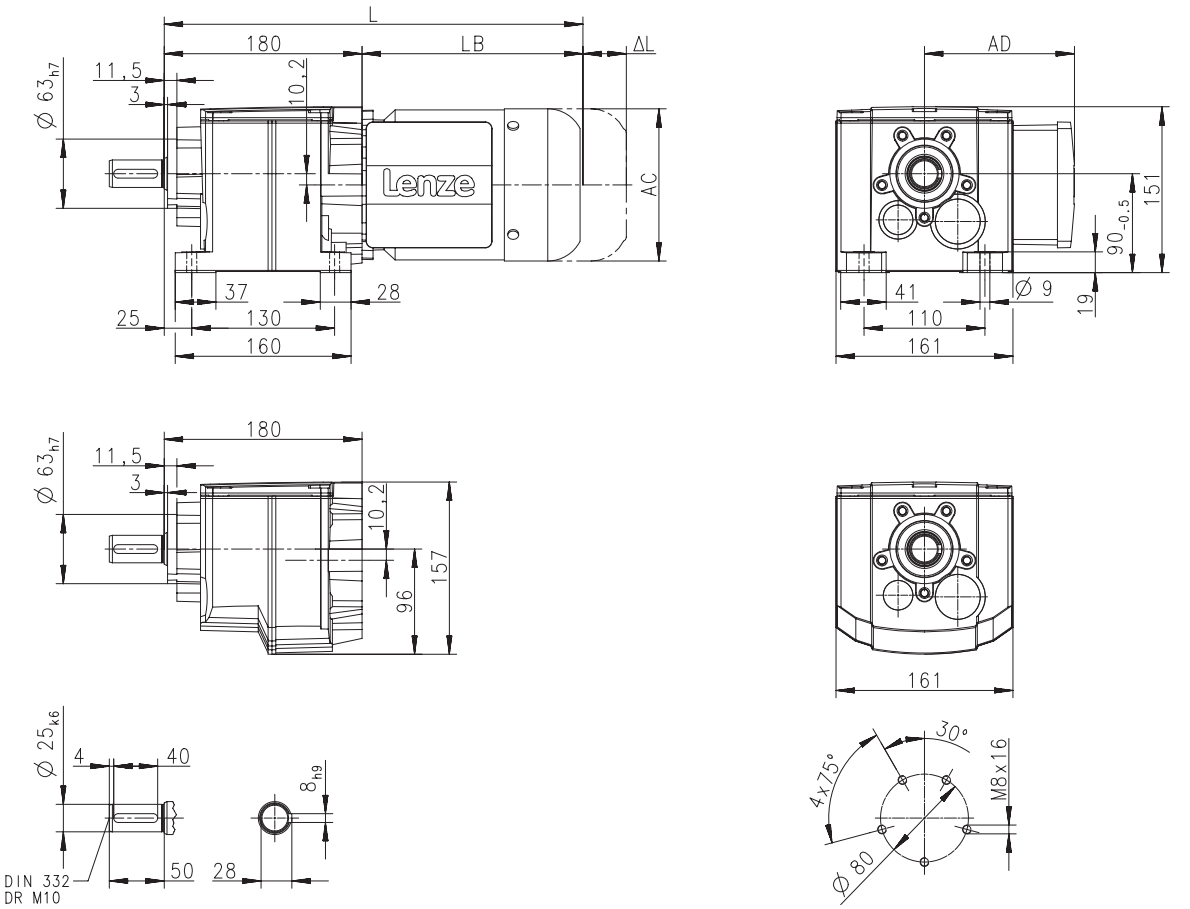

Produkt			MD□MA□□			
			063-11	063-31	071-11	071-31
Abmessungen						
Gesamtlänge	**L**	**[mm]**	363		383	
Länge Motor	**LB**	**[mm]**	183		203	
Länge Motoranbauten	**Δ L**	**[mm]**	170		165	
Motordurchmesser	**AC**	**[mm]**	123		139	
Abstand Motor/Anschluss	**AD**	**[mm]**	100		109	



Dimensions, 2-pole motors

g500-H210

Dimensions with solid shaft and Flange

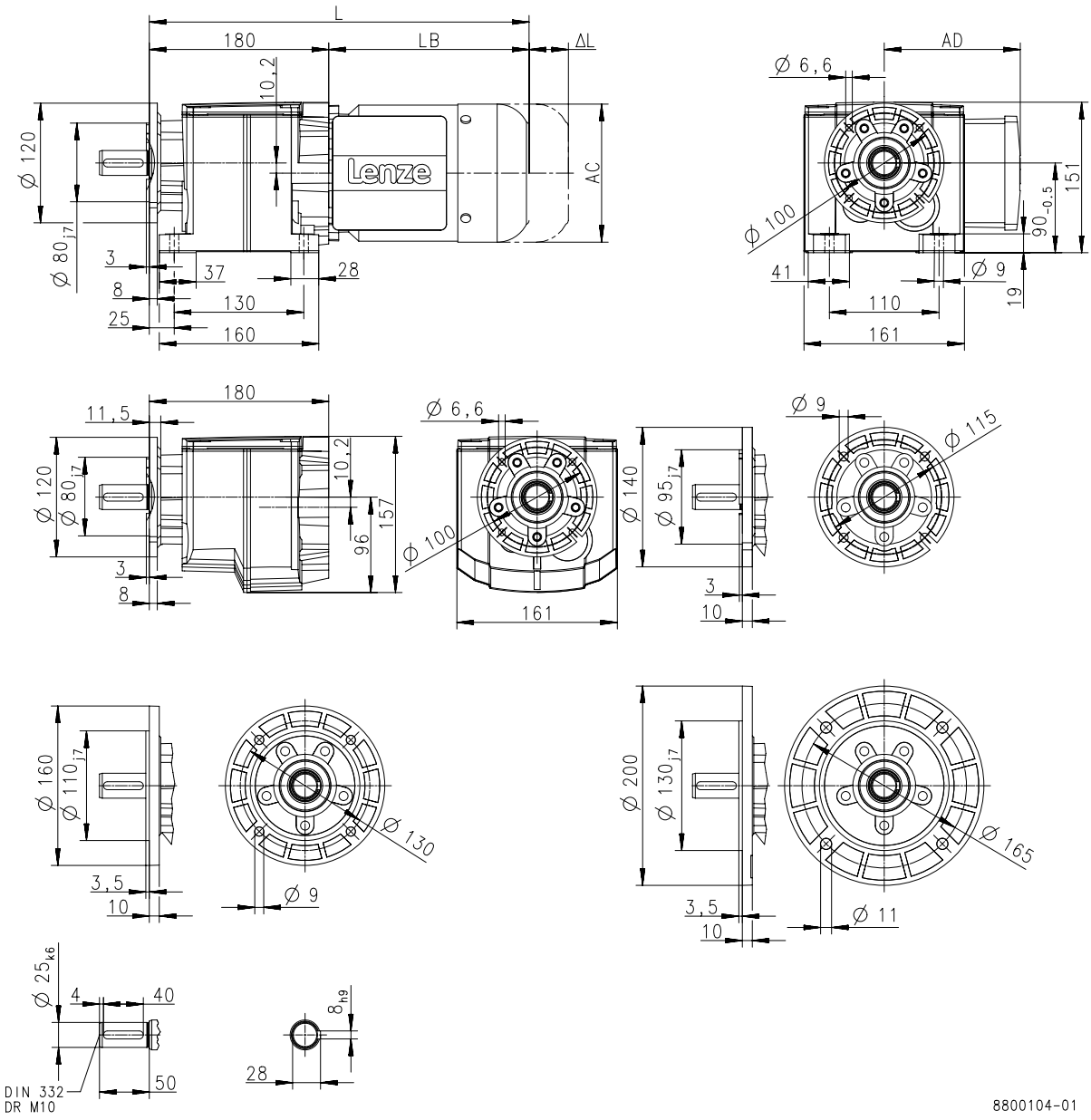

Produkt			MD□MA□□			
			063-11	063-31	071-11	071-31
Abmessungen						
Gesamtlänge	**L**	**[mm]**	363		383	
Länge Motor	**LB**	**[mm]**	183		203	
Länge Motoranbauten	**Δ L**	**[mm]**	170		165	
Motordurchmesser	**AC**	**[mm]**	123		139	
Abstand Motor/Anschluss	**AD**	**[mm]**	100		109	



Dimensions, 2-pole motors

g500-H320

Dimensions with solid shaft

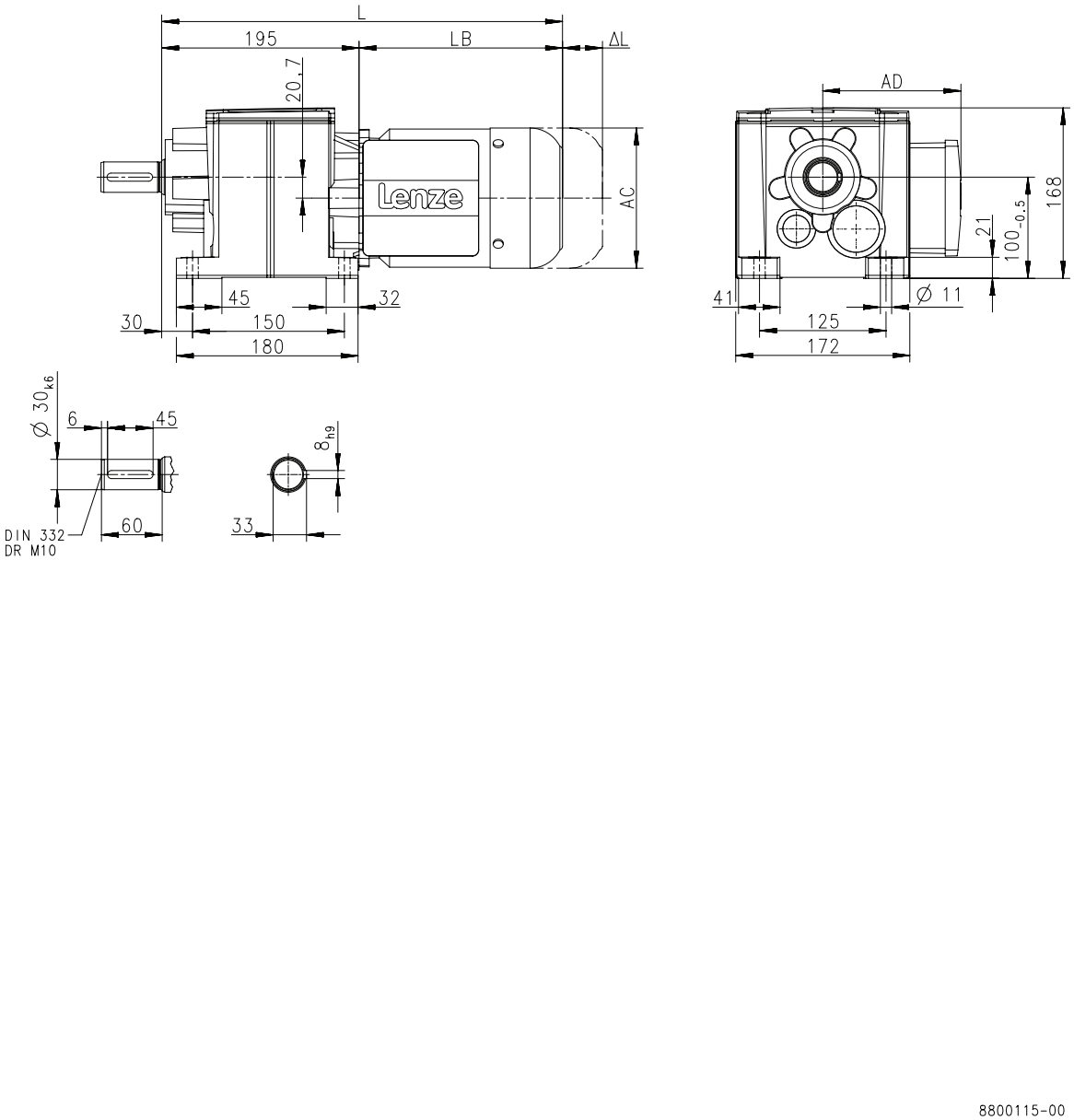

Produkt			MD□MA□□
			071-31
Abmessungen			
Gesamtlänge	**L**	**[mm]**	403
Länge Motor	**LB**	**[mm]**	203
Länge Motoranbauten	**Δ L**	**[mm]**	165
Motordurchmesser	**AC**	**[mm]**	139
Abstand Motor/Anschluss	**AD**	**[mm]**	109



Dimensions, 2-pole motors

g500-H320

Dimensions with solid shaft and centering

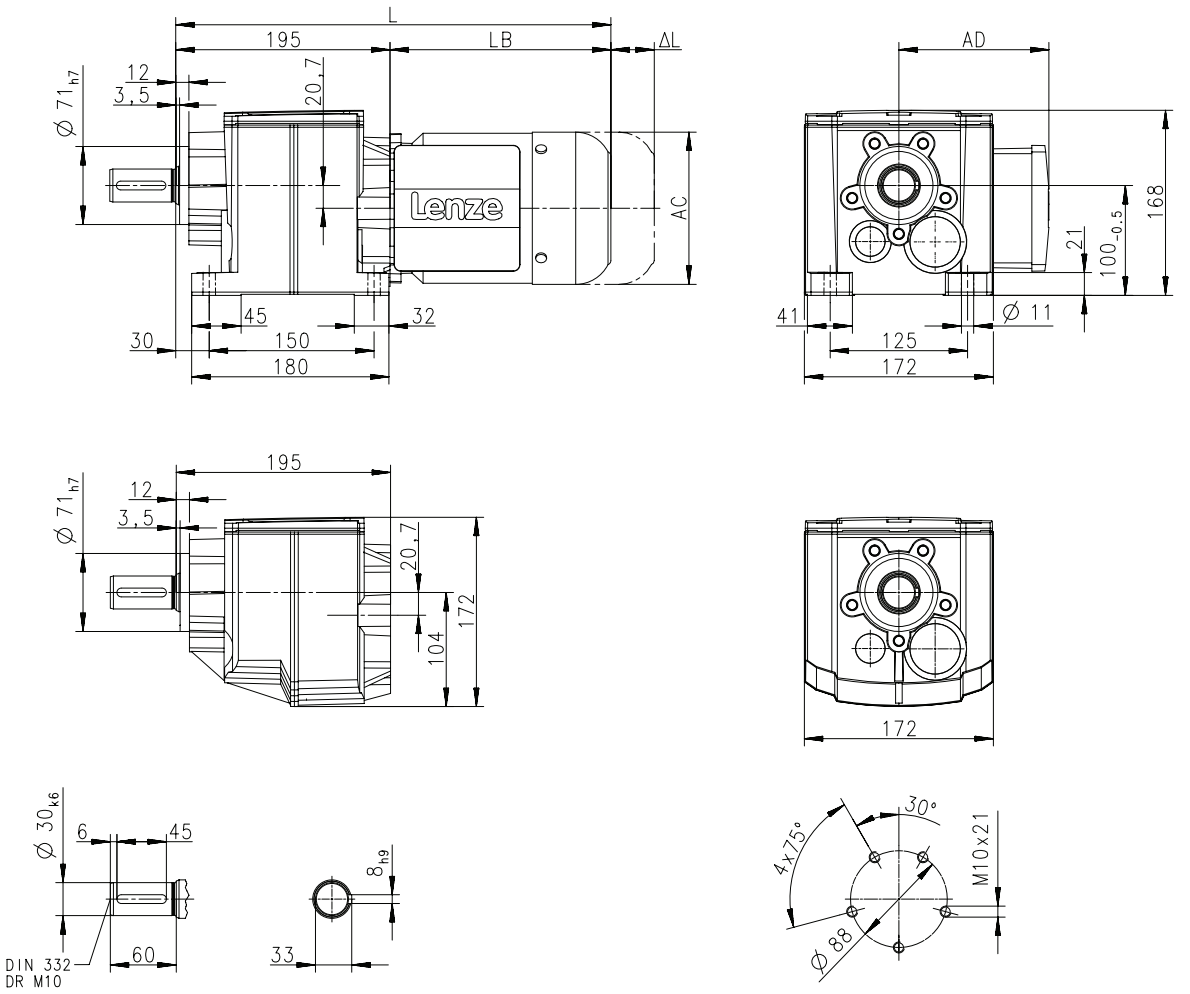

Produkt			MD□MA□□
			071-31
Abmessungen			
Gesamtlänge	**L**	**[mm]**	403
Länge Motor	**LB**	**[mm]**	203
Länge Motoranbauten	**Δ L**	**[mm]**	165
Motordurchmesser	**AC**	**[mm]**	139
Abstand Motor/Anschluss	**AD**	**[mm]**	109



Dimensions, 2-pole motors

g500-H320

Dimensions with solid shaft and Flange

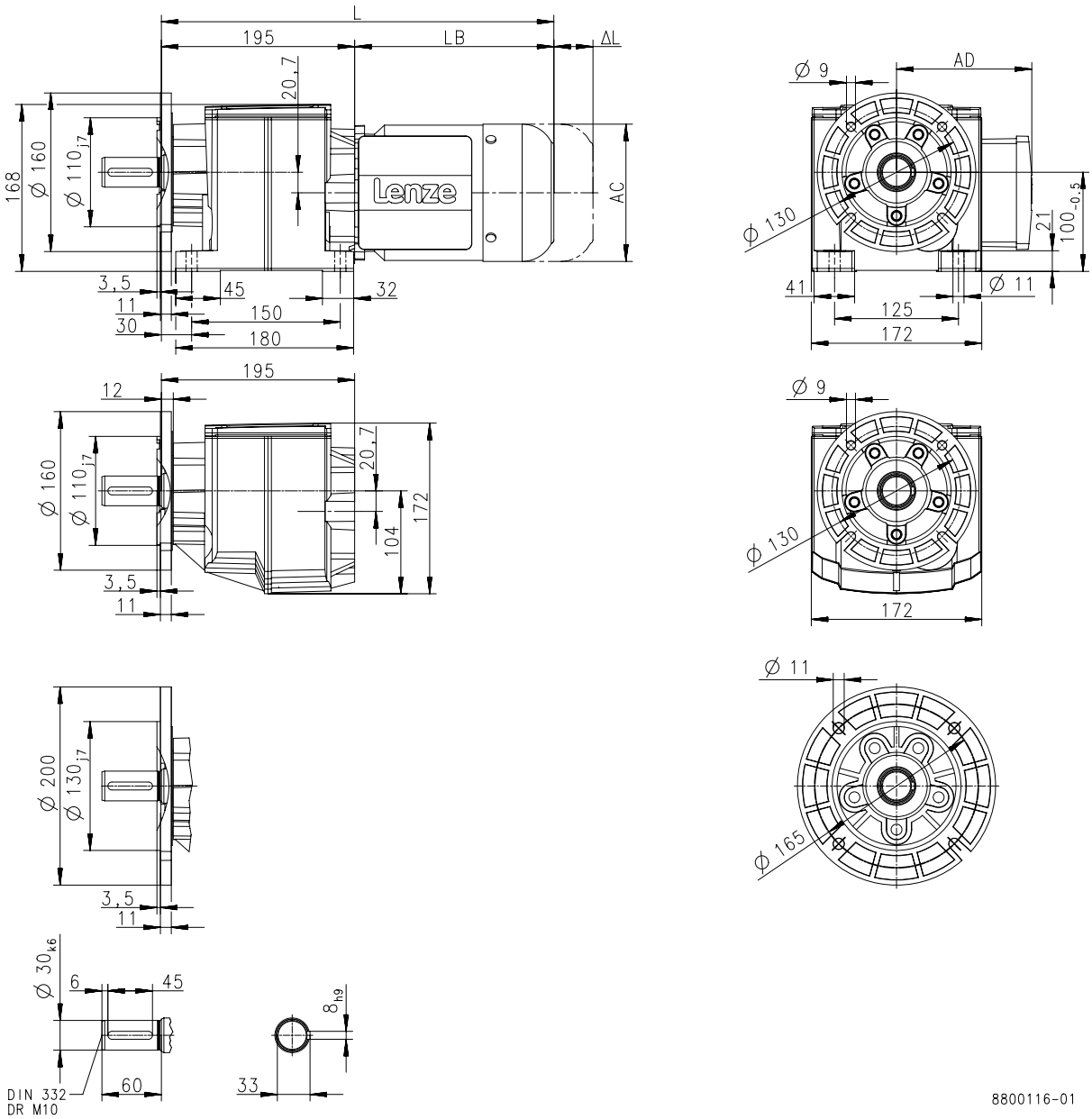

Produkt			MD□MA□□
			071-31
Abmessungen			
Gesamtlänge	**L**	**[mm]**	403
Länge Motor	**LB**	**[mm]**	203
Länge Motoranbauten	**Δ L**	**[mm]**	165
Motordurchmesser	**AC**	**[mm]**	139
Abstand Motor/Anschluss	**AD**	**[mm]**	109



Dimensions, 2-pole motors

g500-H450

Dimensions with solid shaft

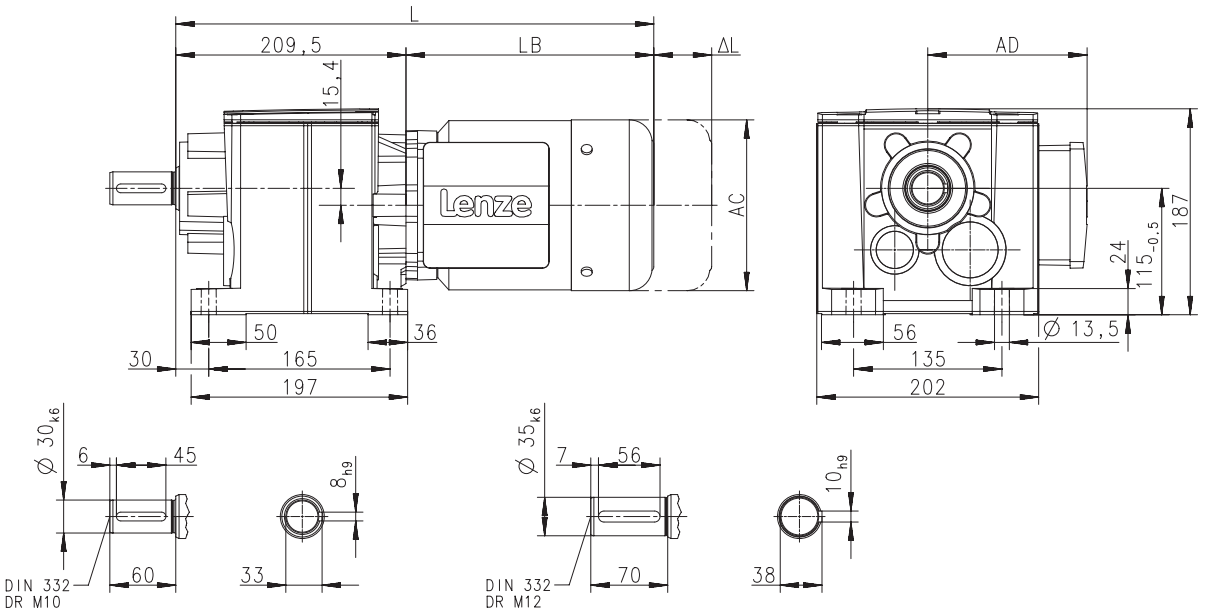

Produkt			MD□MA□□
			071-31
Abmessungen			
Gesamtlänge	**L**	**[mm]**	413
Länge Motor	**LB**	**[mm]**	203
Länge Motoranbauten	**Δ L**	**[mm]**	165
Motordurchmesser	**AC**	**[mm]**	139
Abstand Motor/Anschluss	**AD**	**[mm]**	109



Dimensions, 2-pole motors

g500-H450

Dimensions with solid shaft and centering

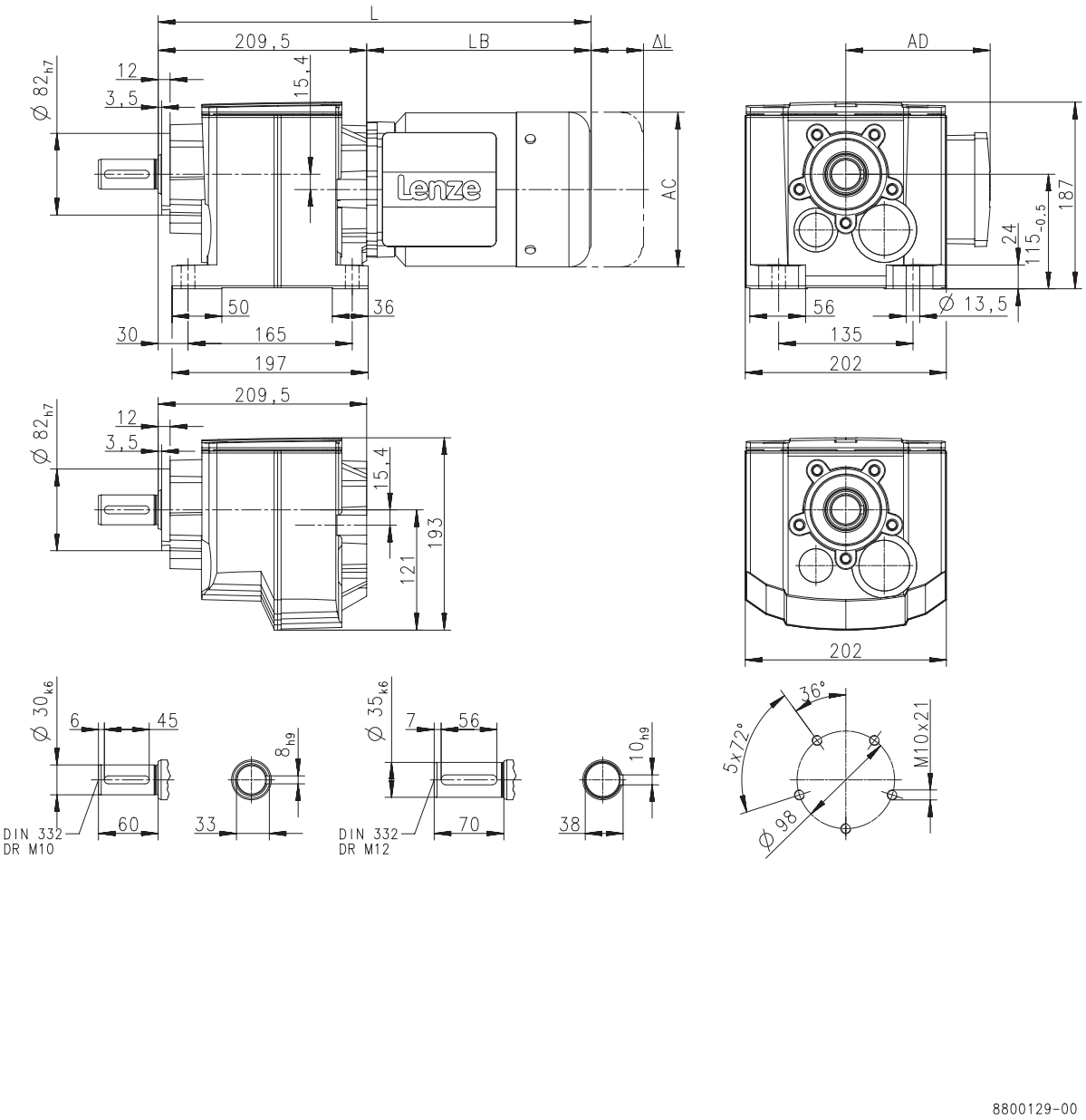

Produkt			MD□MA□□
			071-31
Abmessungen			
Gesamtlänge	**L**	**[mm]**	413
Länge Motor	**LB**	**[mm]**	203
Länge Motoranbauten	**Δ L**	**[mm]**	165
Motordurchmesser	**AC**	**[mm]**	139
Abstand Motor/Anschluss	**AD**	**[mm]**	109



Dimensions, 2-pole motors

g500-H450

Dimensions with solid shaft and Flange

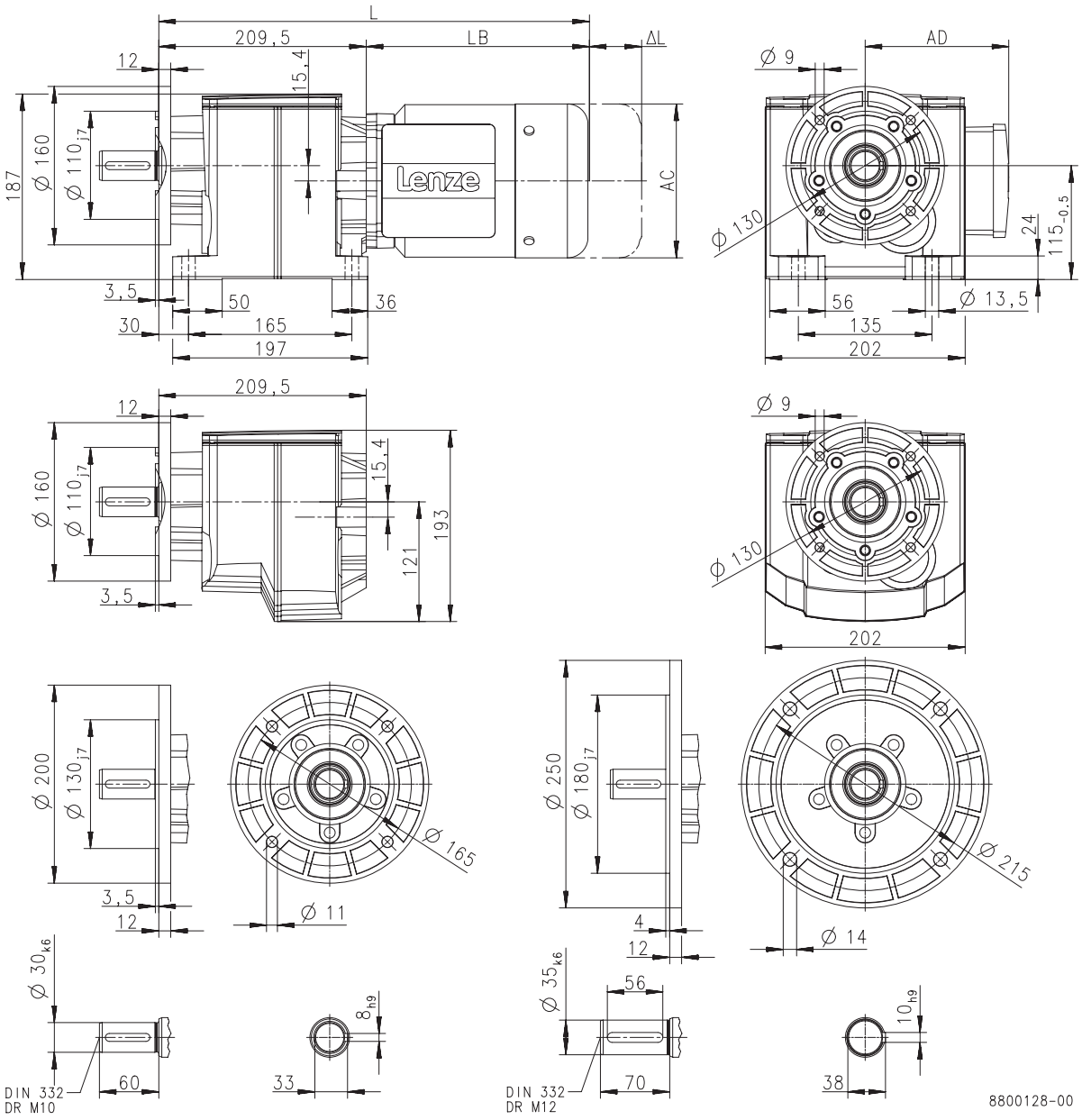

Produkt			MD□MA□□
			071-31
Abmessungen			
Gesamtlänge	**L**	**[mm]**	413
Länge Motor	**LB**	**[mm]**	203
Länge Motoranbauten	**Δ L**	**[mm]**	165
Motordurchmesser	**AC**	**[mm]**	139
Abstand Motor/Anschluss	**AD**	**[mm]**	109



Dimensions, 6-pole motors

g500-H100

Dimensions with solid shaft

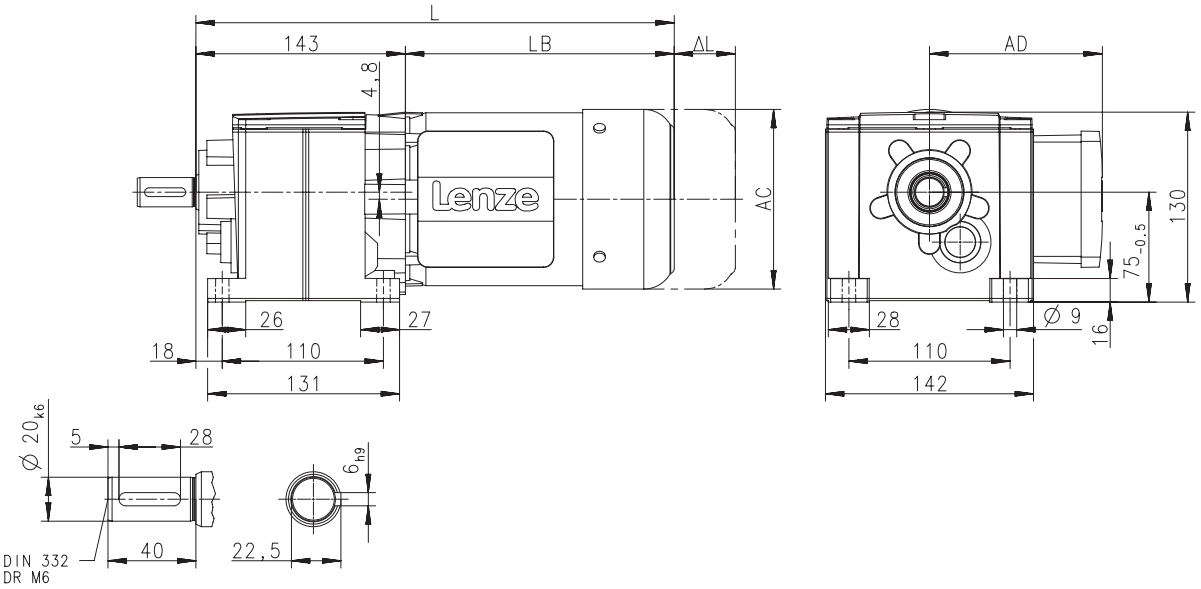

Produkt			MD□MA□□			
			071-13	071-33	080-13	080-33
Abmessungen						
Gesamtlänge	**L**	**[mm]**	346		369	
Länge Motor	**LB**	**[mm]**	203		226	
Länge Motoranbauten	**Δ L**	**[mm]**	165		183	
Motordurchmesser	**AC**	**[mm]**	139		156	
Abstand Motor/Anschluss	**AD**	**[mm]**	109		150	



Dimensions, 6-pole motors

g500-H100

Dimensions with solid shaft and centering

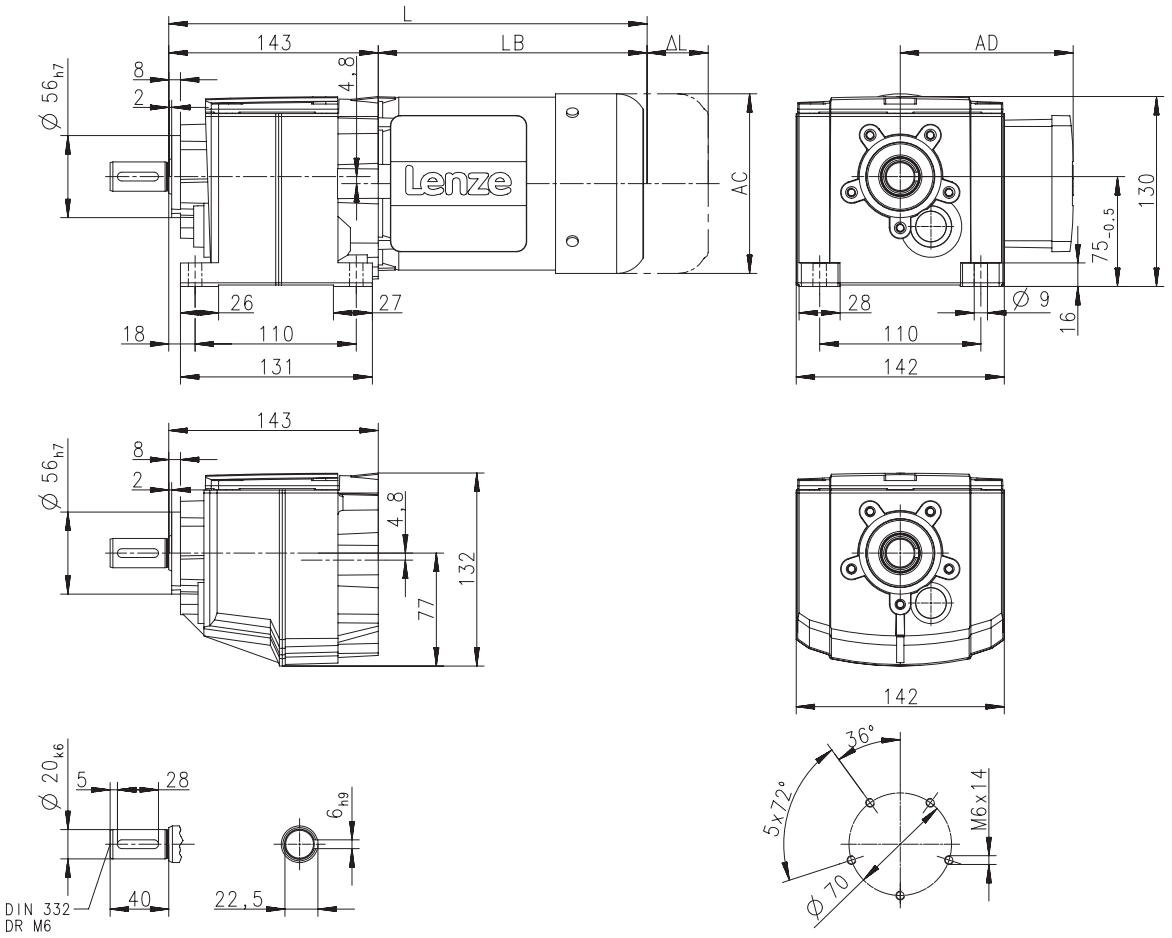

Produkt			MD□MA□□			
			071-13	071-33	080-13	080-33
Abmessungen						
Gesamtlänge	**L**	**[mm]**	346		369	
Länge Motor	**LB**	**[mm]**	203		226	
Länge Motoranbauten	**Δ L**	**[mm]**	165		183	
Motordurchmesser	**AC**	**[mm]**	139		156	
Abstand Motor/Anschluss	**AD**	**[mm]**	109		150	



Dimensions, 6-pole motors

g500-H100

Dimensions with solid shaft and Flange

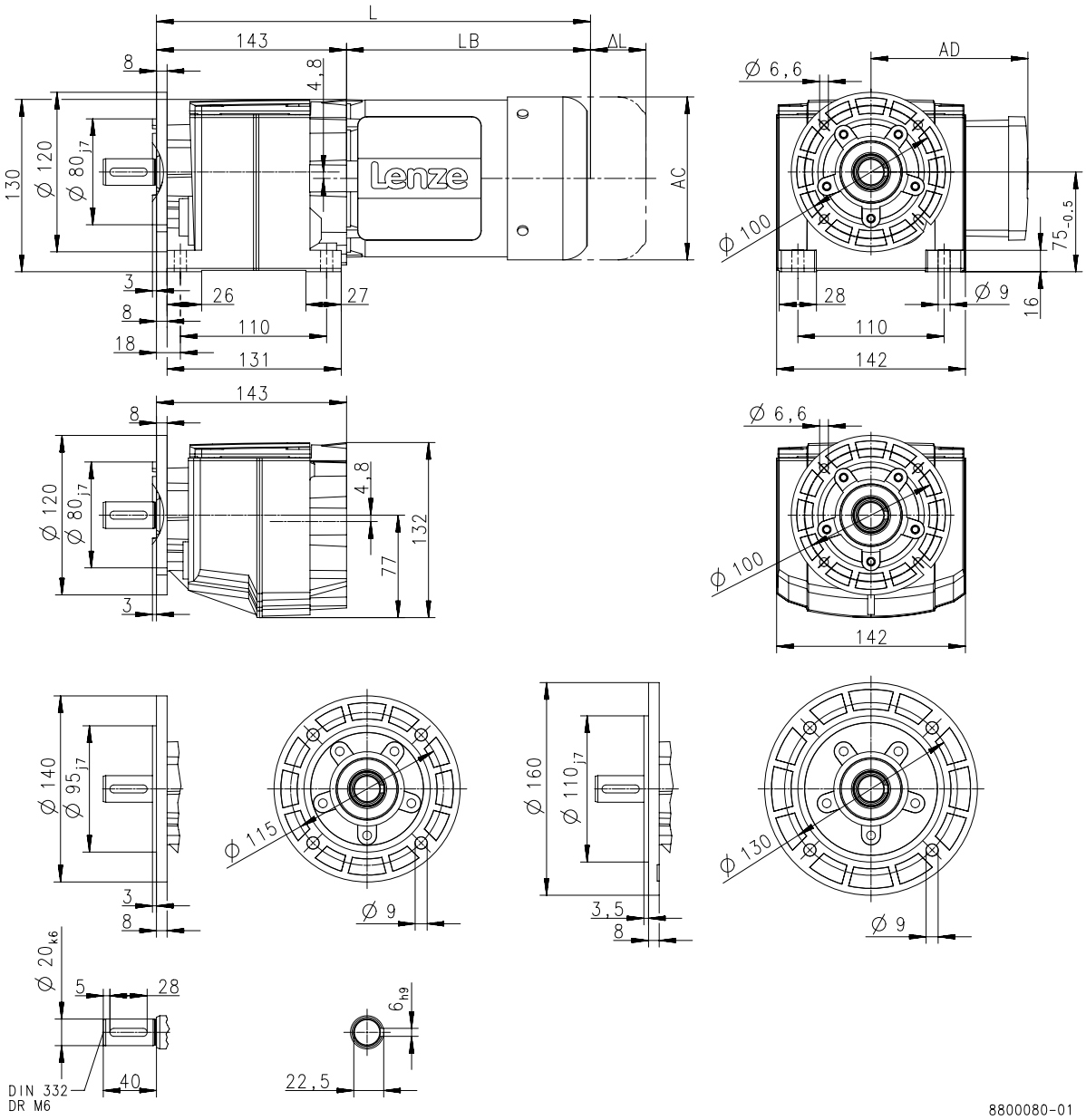

Produkt			MD□MA□□			
			071-13	071-33	080-13	080-33
Abmessungen						
Gesamtlänge	**L**	**[mm]**	346		369	
Länge Motor	**LB**	**[mm]**	203		226	
Länge Motoranbauten	**Δ L**	**[mm]**	165		183	
Motordurchmesser	**AC**	**[mm]**	139		156	
Abstand Motor/Anschluss	**AD**	**[mm]**	109		150	



Dimensions, 6-pole motors

g500-H140

Dimensions with solid shaft

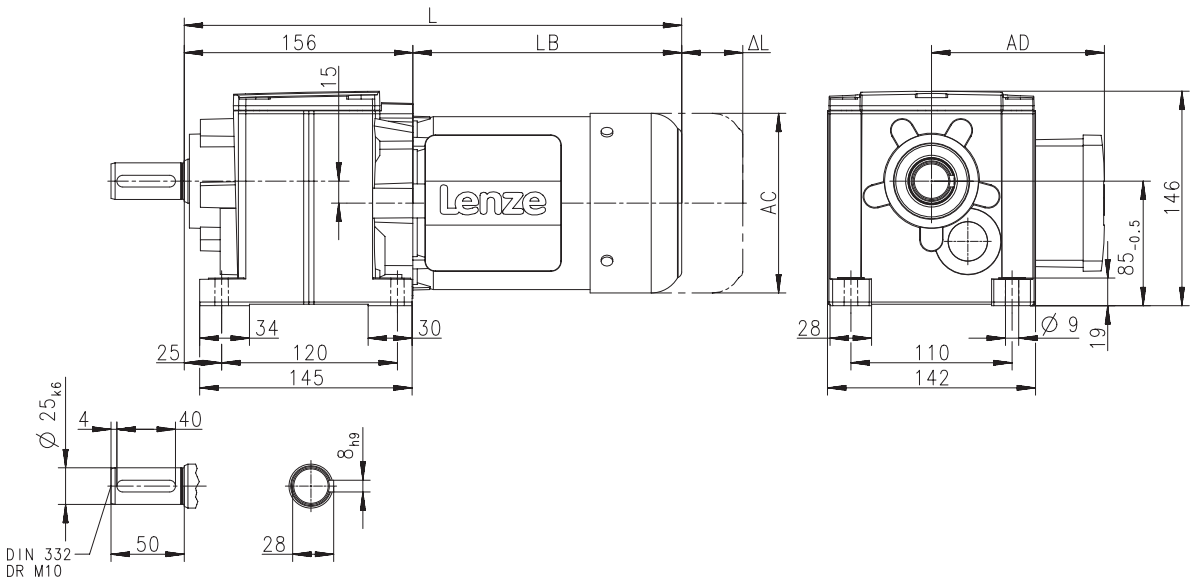

8800091-00

Produkt			MD□MA□□			
			071-13	071-33	080-13	080-33
Abmessungen						
Gesamtlänge	**L**	**[mm]**	359		382	
Länge Motor	**LB**	**[mm]**	203		226	
Länge Motoranbauten	**Δ L**	**[mm]**	165		183	
Motordurchmesser	**AC**	**[mm]**	139		156	
Abstand Motor/Anschluss	**AD**	**[mm]**	109		150	



Dimensions, 6-pole motors

g500-H140

Dimensions with solid shaft and centering

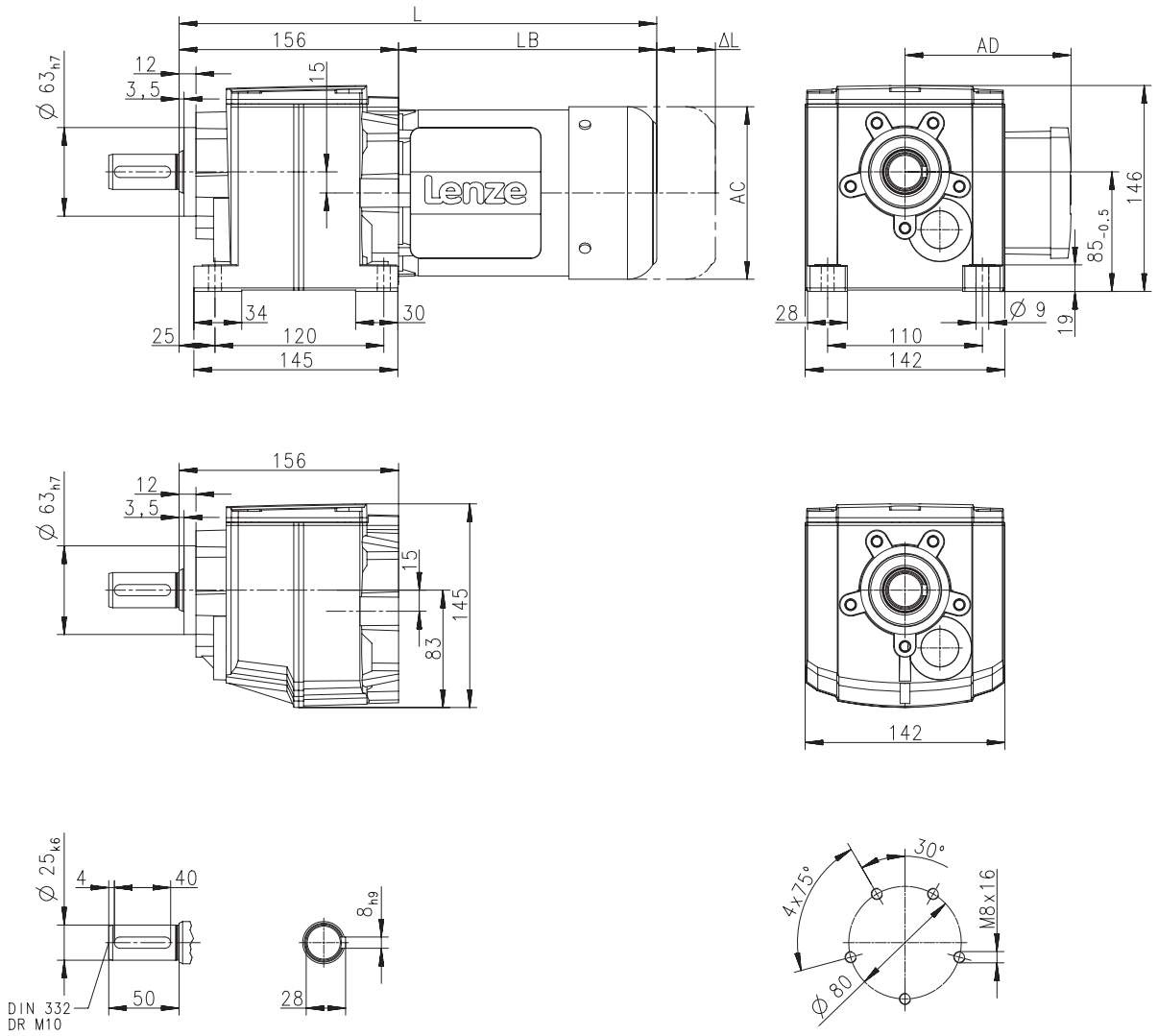

Produkt			MD□MA□□			
			071-13	071-33	080-13	080-33
Abmessungen						
Gesamtlänge	**L**	**[mm]**	359		382	
Länge Motor	**LB**	**[mm]**	203		226	
Länge Motoranbauten	**Δ L**	**[mm]**	165		183	
Motordurchmesser	**AC**	**[mm]**	139		156	
Abstand Motor/Anschluss	**AD**	**[mm]**	109		150	



Dimensions, 6-pole motors

g500-H140

Dimensions with solid shaft and Flange

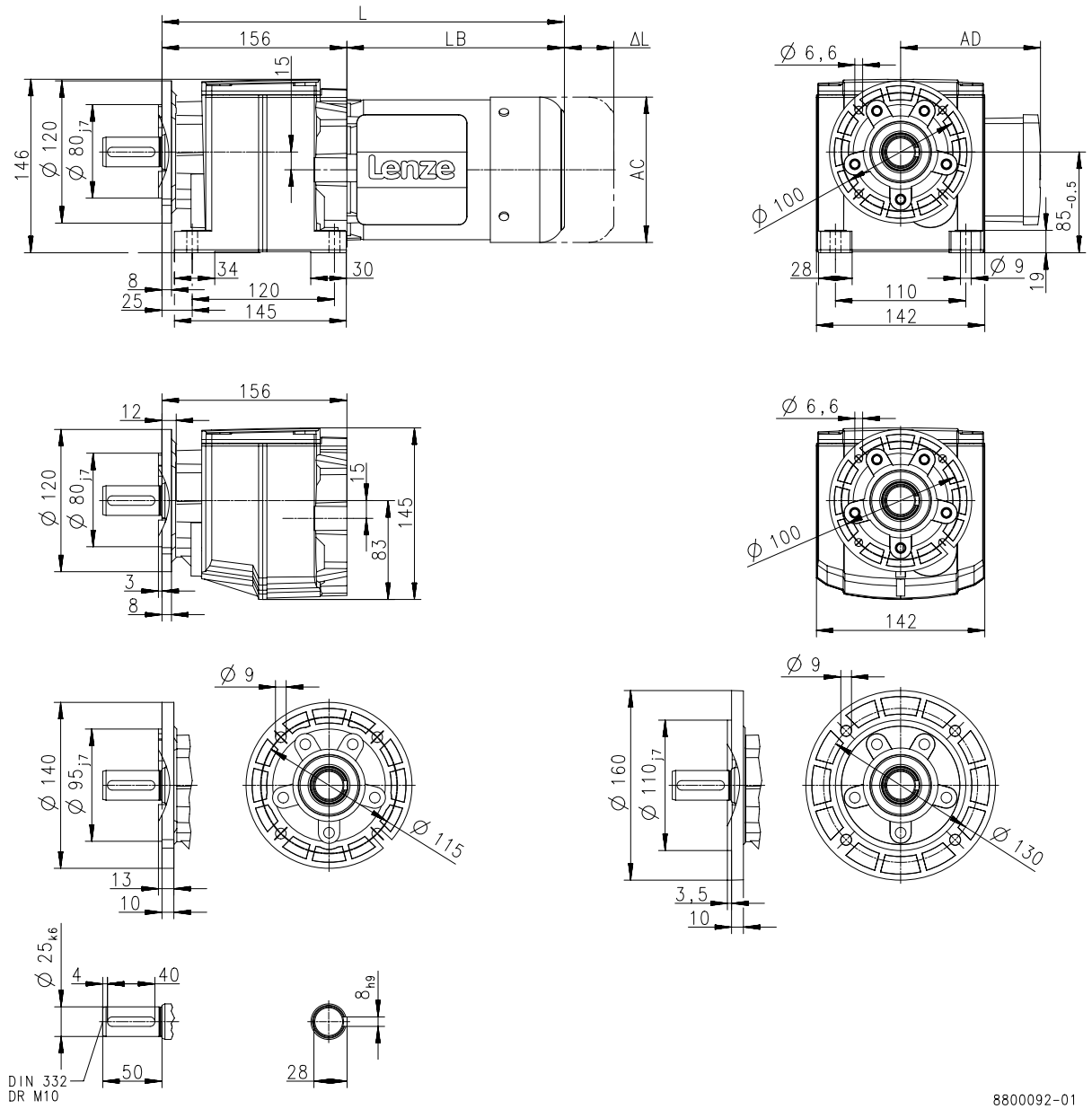

Produkt			MD□MA□□			
			071-13	071-33	080-13	080-33
Abmessungen						
Gesamtlänge	**L**	**[mm]**	359		382	
Länge Motor	**LB**	**[mm]**	203		226	
Länge Motoranbauten	**Δ L**	**[mm]**	165		183	
Motordurchmesser	**AC**	**[mm]**	139		156	
Abstand Motor/Anschluss	**AD**	**[mm]**	109		150	



Dimensions, 6-pole motors

g500-H210

Dimensions with solid shaft

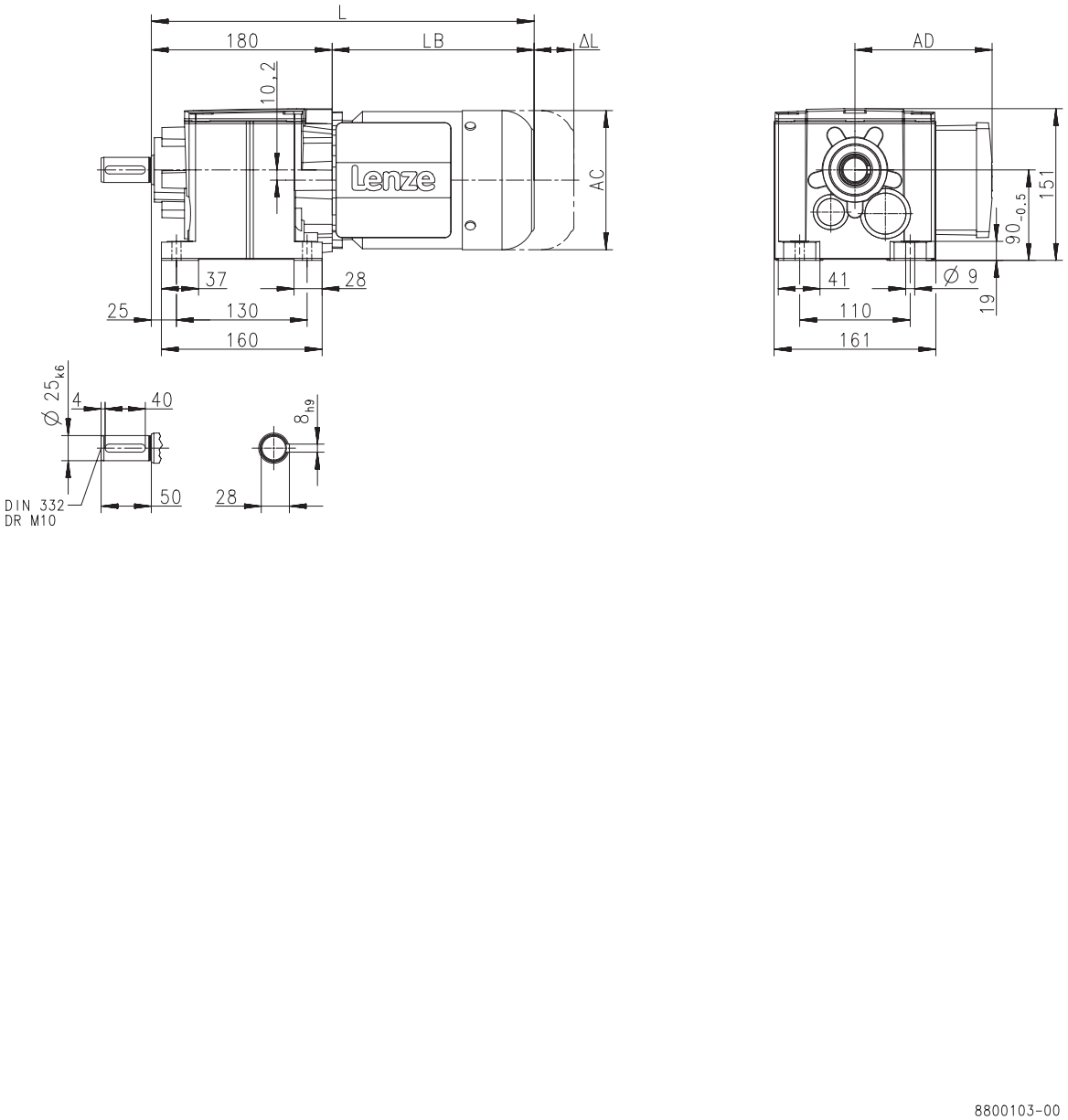

Produkt			MD□MA□□			
			071-13	071-33	080-13	080-33
Abmessungen						
Gesamtlänge	**L**	**[mm]**	383		406	
Länge Motor	**LB**	**[mm]**	203		226	
Länge Motoranbauten	**Δ L**	**[mm]**	165		183	
Motordurchmesser	**AC**	**[mm]**	139		156	
Abstand Motor/Anschluss	**AD**	**[mm]**	109		150	

6.3



Dimensions, 6-pole motors

g500-H210

Dimensions with solid shaft and centering

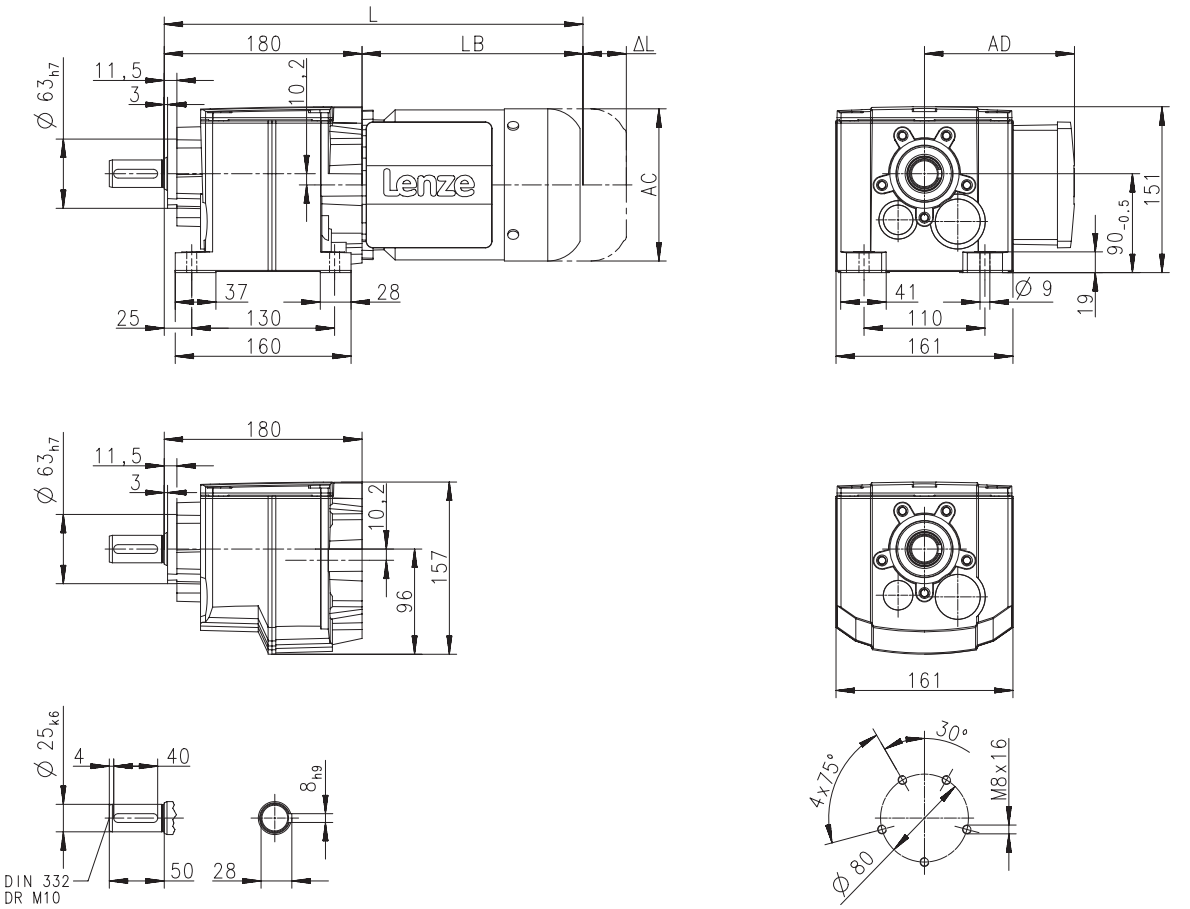

Produkt			MD□MA□□			
			071-13	071-33	080-13	080-33
Abmessungen						
Gesamtlänge	**L**	**[mm]**	383		406	
Länge Motor	**LB**	**[mm]**	203		226	
Länge Motoranbauten	**Δ L**	**[mm]**	165		183	
Motordurchmesser	**AC**	**[mm]**	139		156	
Abstand Motor/Anschluss	**AD**	**[mm]**	109		150	



Dimensions, 6-pole motors

g500-H210

Dimensions with solid shaft and Flange

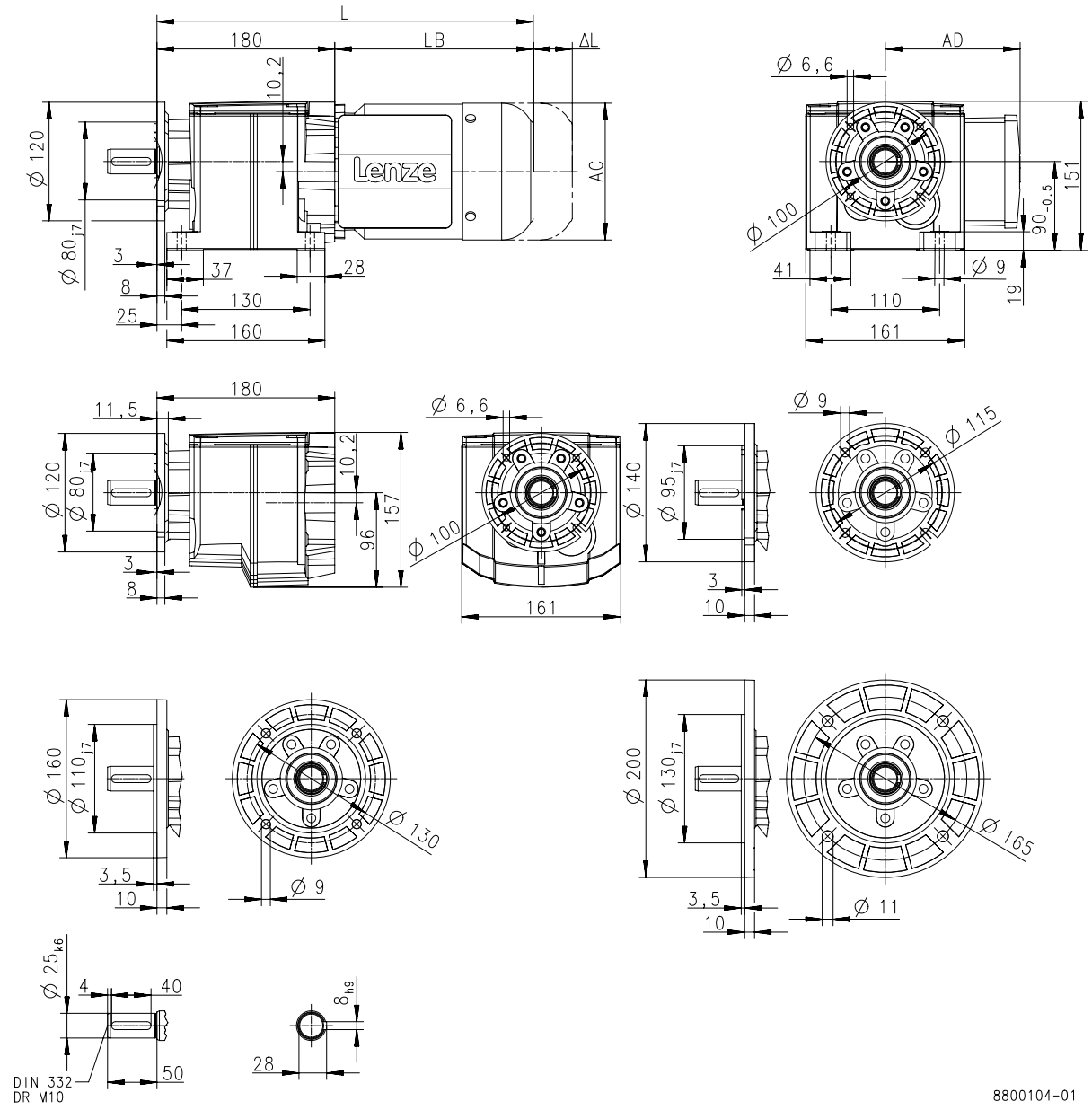

Produkt			MD□MA□□			
			071-13	071-33	080-13	080-33
Abmessungen						
Gesamtlänge	**L**	**[mm]**	383		406	
Länge Motor	**LB**	**[mm]**	203		226	
Länge Motoranbauten	**Δ L**	**[mm]**	165		183	
Motordurchmesser	**AC**	**[mm]**	139		156	
Abstand Motor/Anschluss	**AD**	**[mm]**	109		150	



Dimensions, 6-pole motors

g500-H320

Dimensions with solid shaft

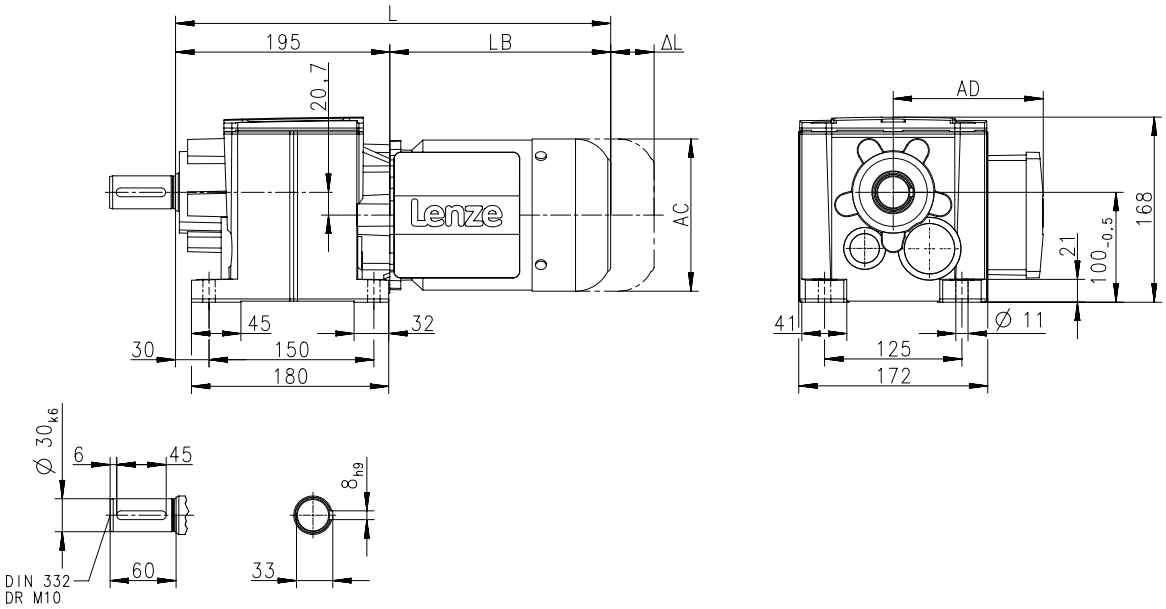

Produkt			MD□MA□□			
			071-13	071-33	080-13	080-33
Abmessungen						
Gesamtlänge	**L**	**[mm]**	403		426	
Länge Motor	**LB**	**[mm]**	203		226	
Länge Motoranbauten	**Δ L**	**[mm]**	165		183	
Motordurchmesser	**AC**	**[mm]**	139		156	
Abstand Motor/Anschluss	**AD**	**[mm]**	109		150	



Dimensions, 6-pole motors

g500-H320

Dimensions with solid shaft and centering

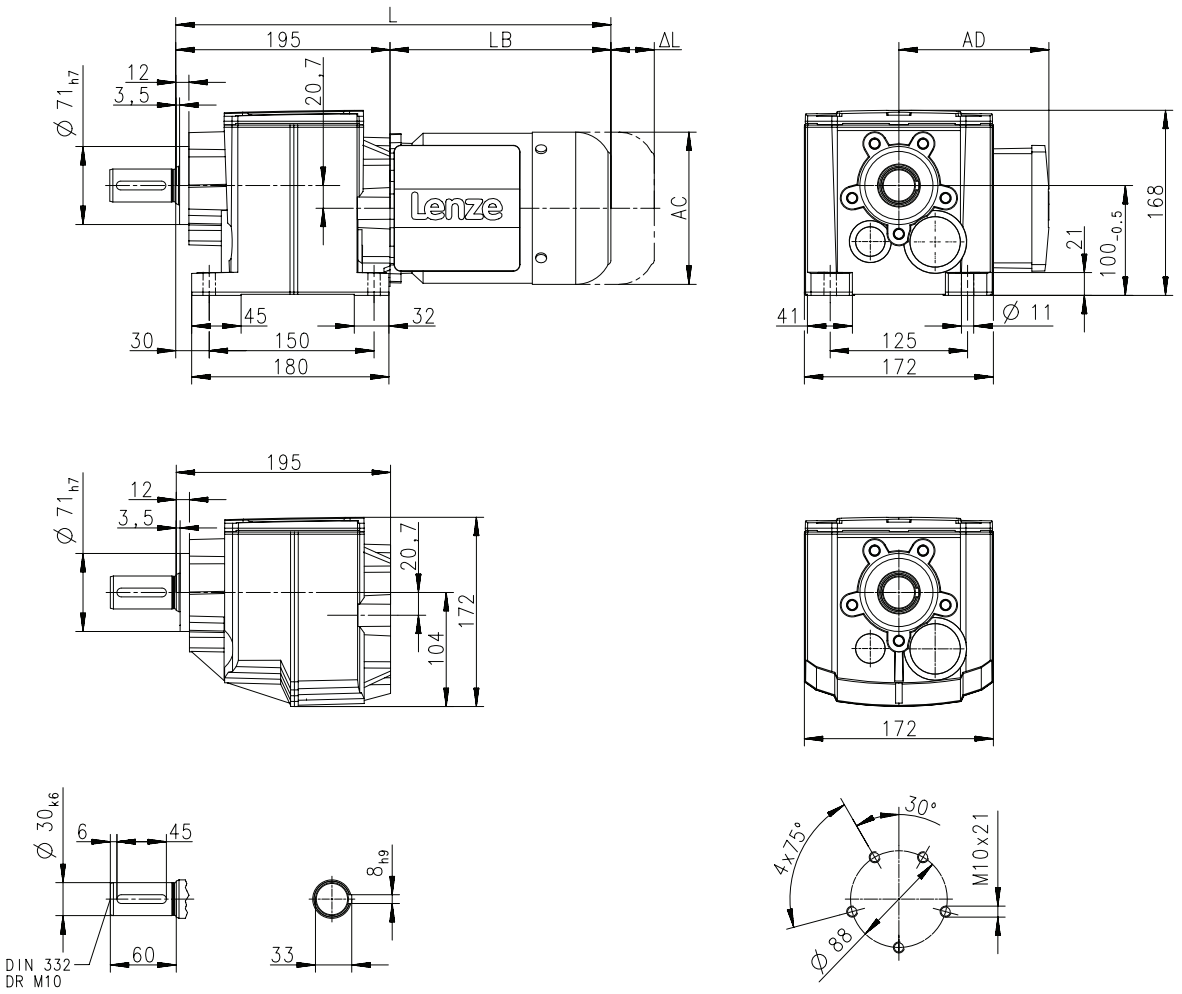

Produkt			MD□MA□□			
			071-13	071-33	080-13	080-33
Abmessungen						
Gesamtlänge	**L**	**[mm]**	403		426	
Länge Motor	**LB**	**[mm]**	203		226	
Länge Motoranbauten	**Δ L**	**[mm]**	165		183	
Motordurchmesser	**AC**	**[mm]**	139		156	
Abstand Motor/Anschluss	**AD**	**[mm]**	109		150	



Dimensions, 6-pole motors

g500-H320

Dimensions with solid shaft and Flange

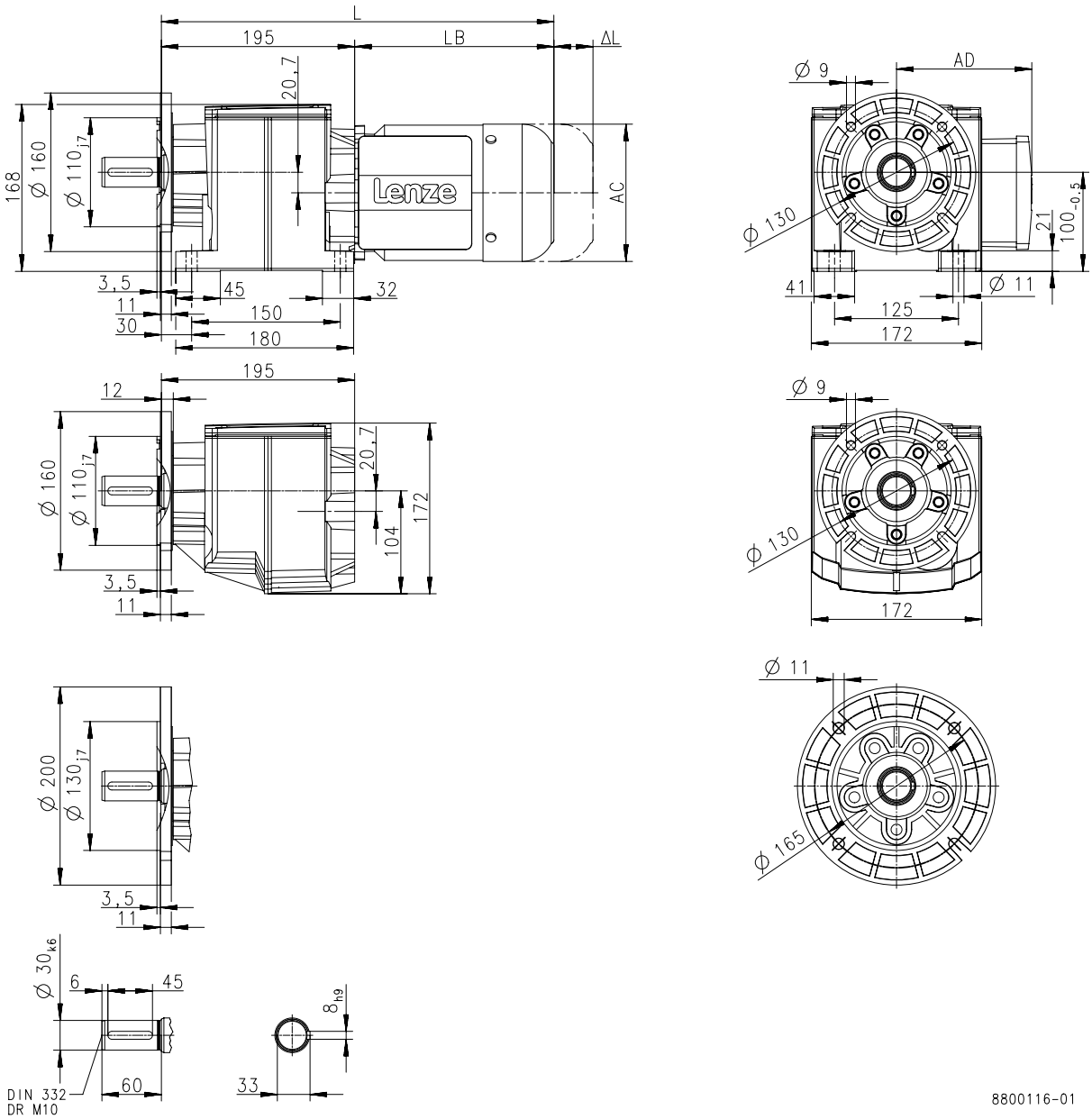

Produkt			MD□MA□□			
			071-13	071-33	080-13	080-33
Abmessungen						
Gesamtlänge	**L**	**[mm]**	403		426	
Länge Motor	**LB**	**[mm]**	203		226	
Länge Motoranbauten	**Δ L**	**[mm]**	165		183	
Motordurchmesser	**AC**	**[mm]**	139		156	
Abstand Motor/Anschluss	**AD**	**[mm]**	109		150	



Dimensions, 6-pole motors

g500-H450

Dimensions with solid shaft

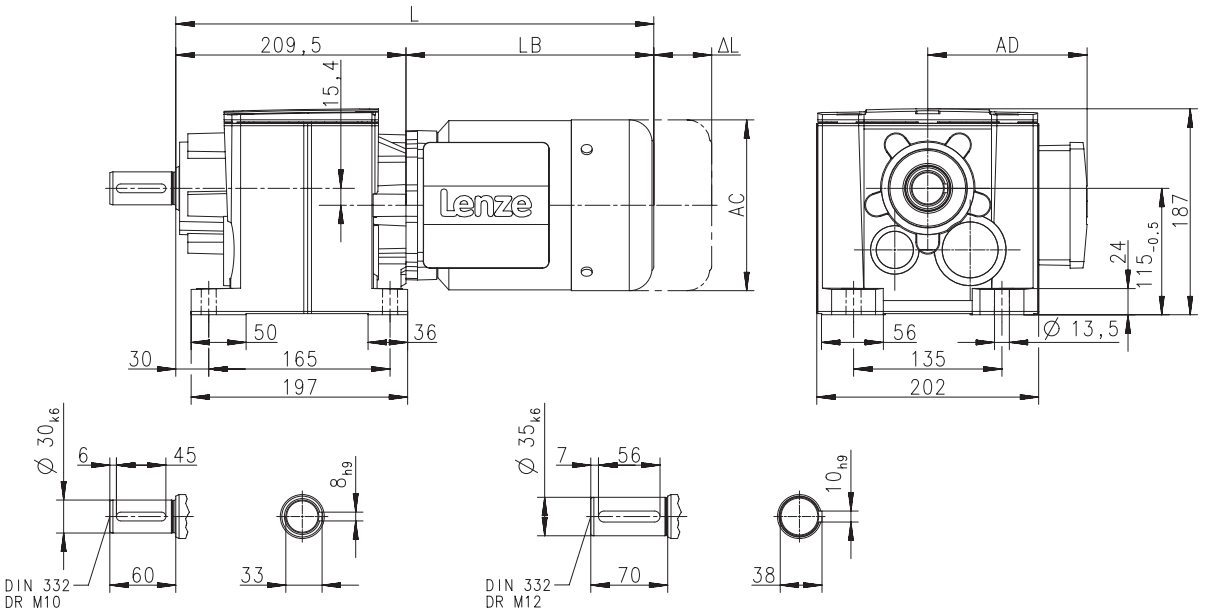

8800127-00

Produkt			MD□MA□□			
			071-13	071-33	080-13	080-33
Abmessungen						
Gesamtlänge	**L**	**[mm]**	413		436	
Länge Motor	**LB**	**[mm]**	203		226	
Länge Motoranbauten	**Δ L**	**[mm]**	165		183	
Motordurchmesser	**AC**	**[mm]**	139		156	
Abstand Motor/Anschluss	**AD**	**[mm]**	109		150	



Dimensions, 6-pole motors

g500-H450

Dimensions with solid shaft and centering

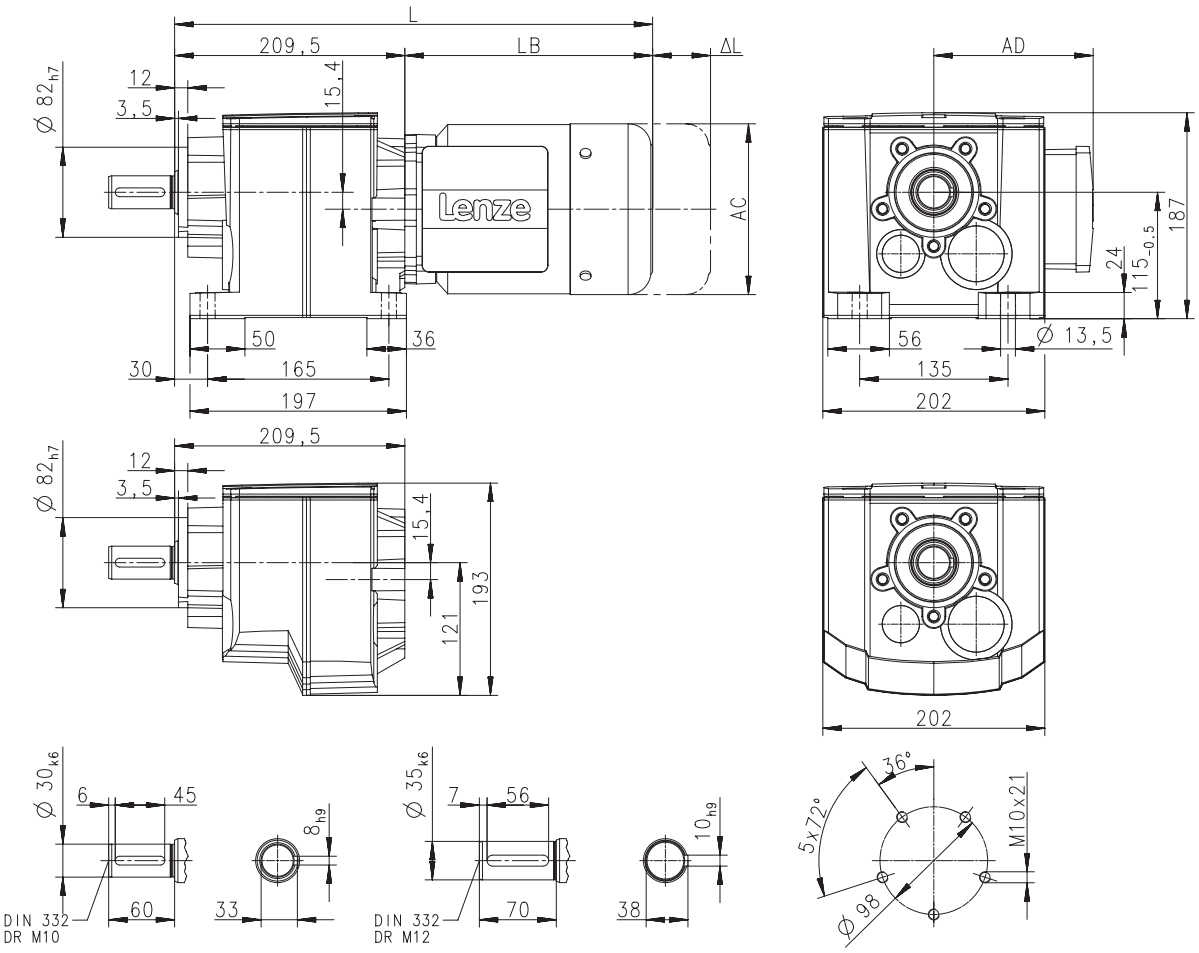

Produkt			MD□MA□□			
			071-13	071-33	080-13	080-33
Abmessungen						
Gesamtlänge	**L**	**[mm]**	413		436	
Länge Motor	**LB**	**[mm]**	203		226	
Länge Motoranbauten	**Δ L**	**[mm]**	165		183	
Motordurchmesser	**AC**	**[mm]**	139		156	
Abstand Motor/Anschluss	**AD**	**[mm]**	109		150	



Dimensions, 6-pole motors

g500-H450

Dimensions with solid shaft and Flange

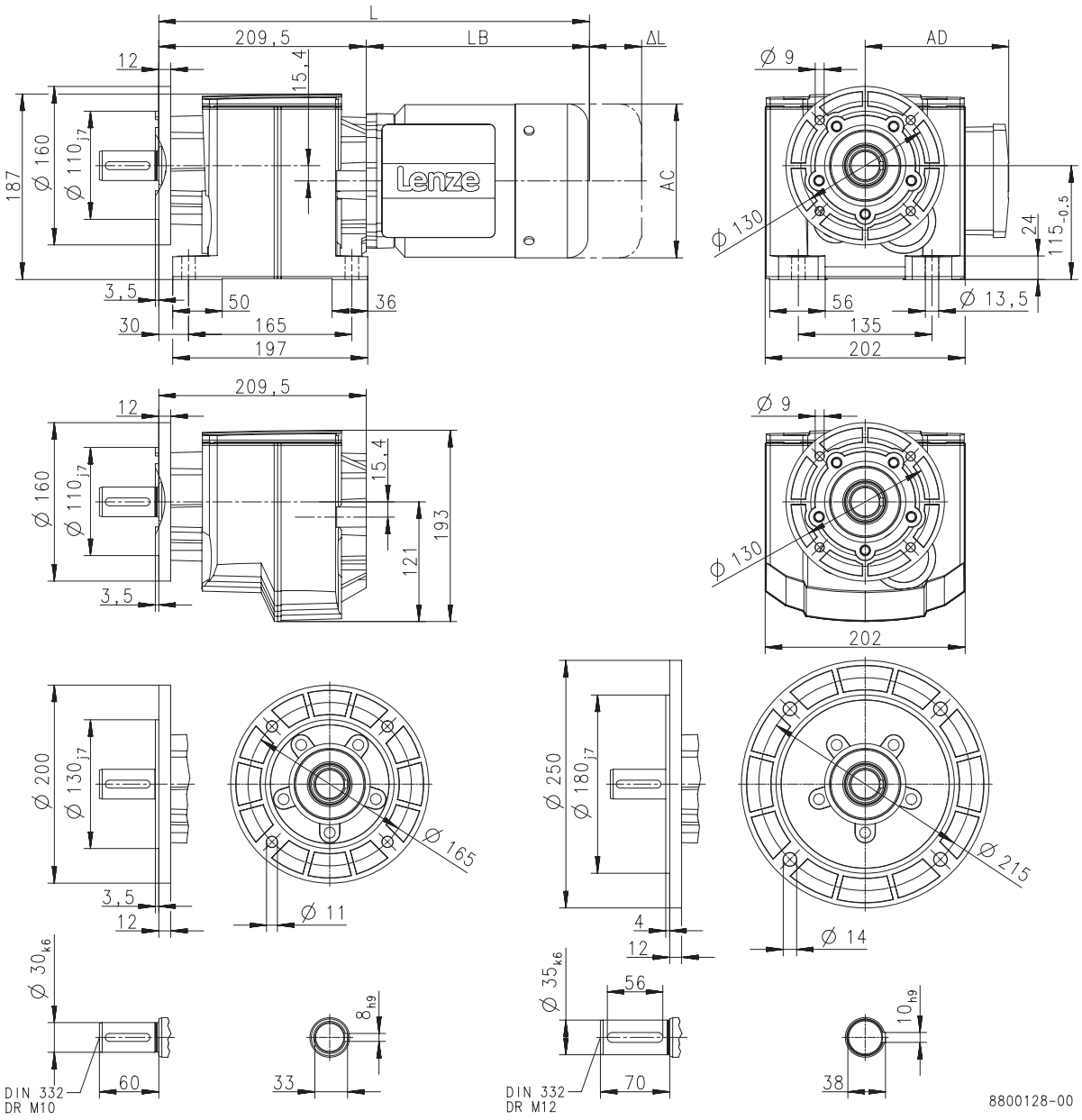

Produkt			MD□MA□□			
			071-13	071-33	080-13	080-33
Abmessungen						
Gesamtlänge	**L**	**[mm]**	413		436	
Länge Motor	**LB**	**[mm]**	203		226	
Länge Motoranbauten	**Δ L**	**[mm]**	165		183	
Motordurchmesser	**AC**	**[mm]**	139		156	
Abstand Motor/Anschluss	**AD**	**[mm]**	109		150	



Weights, 4-pole motors

2-stage gearboxes

				MD□MA□□							MH□MA□□
				063-02	063-12	063-22	063-32	063-42	071-32	071-42	080-32
g500	-H45	m	[kg]	5.2	5.5	5.2	5.5	5.8	7.2	7.8	
	-H100	m	[kg]		7.3		7.3	7.6	9.0	9.6	14
	-H140	m	[kg]		8.4		8.4	8.7	10	11	15
	-H210	m	[kg]		9.7		9.7	10	11	12	16
	-H320	m	[kg]				12		13	14	18
	-H450	m	[kg]					15	16	17	22

				MH□MA□□						
				090-12	090-32	100-12	100-32	112-22	132-12	132-22
g500	-H100	m	[kg]	19	21					
	-H140	m	[kg]	20	22					
	-H210	m	[kg]	21	23	29	32			
	-H320	m	[kg]	23	25	31	34	45		
	-H450	m	[kg]	26	28	34	37	48	66	74

3-stage gearboxes

				MD□MA□□			MH□MA□□		
				063-12 063-32	063-42	071-32 071-42	080-32	090-12	090-32
g500	-H210	m	[kg]	9.9	10	12	17		
	-H320	m	[kg]	12		14	19		
	-H450	m	[kg]	15		17	22	27	29

Weights, 2-pole motors

2-stage gearboxes

				MD□MA□□			
				063-11	063-31	071-11	071-31
g500	-H100	m	[kg]	7.1	7.0	9.2	9.7
	-H140	m	[kg]	8.2	8.1	10	11
	-H210	m	[kg]	9.5	9.4	12	
	-H320	m	[kg]				14
	-H450	m	[kg]				17



Weights, 6-pole motors

2-stage gearboxes

				MD□MA□□	
				071-13 071-33	080-13 080-33
g500	-H100	m	[kg]	9.7	14
	-H140	m	[kg]	11	15
	-H210	m	[kg]	12	16
	-H320	m	[kg]	14	18
	-H450	m	[kg]	17	22

3-stage gearboxes

				MD□MA□□	
				071-13 071-33	080-13 080-33
g500	-H210	m	[kg]	12	17
	-H320	m	[kg]	14	19
	-H450	m	[kg]	18	22



Surface and corrosion protection

For optimum protection of geared motors against ambient conditions, the surface and corrosion protection system (OKS) offers tailor-made solutions.

Various surface coatings combined with other protective measures ensure that the geared motors operate reliably even at high air humidity, in outdoor installations or in the presence of atmospheric impurities. Any colour from the RAL Classic collection can be chosen for the top coat. The geared motors are also available unpainted (no surface and corrosion protection).

Surface and corrosion protection	Applications	Measures
OKS-G (primed)	• Dependent on subsequent top coat applied	• 2K PUR priming coat (grey) • Zinc-coated screws • Rust-free breather elements Optional measures • Stainless steel nameplate
OKS-S (small)	• Standard applications • Internal installation in heated buildings • Air humidity up to 90%	• Surface coating as per corrosivity category C1 (in line with EN 12944-2) • Zinc-coated screws • Rust-free breather elements Optional measures • Stainless steel nameplate
OKS-M (medium)	• Internal installation in non-heated buildings • Covered, protected external installation • Air humidity up to 95%	• Surface coating as per corrosivity category C2 (in line with EN 12944-2) • Zinc-coated screws • Rust-free breather elements Optional measures • Stainless steel shaft • Stainless steel nameplate • Rust-free shrink disc (on request)
OKS-L (large)	• External installation • Air humidity above 95% • Chemical industry plants • Food industry	• Surface coating as per corrosivity category C3 (in line with EN 12944-2) • Blower cover and B end shield additionally primed • Cable glands with gaskets • Corrosion-resistant brake with cover ring, stainless friction plate, and chrome-plated armature plate (on request) • All screws/screw plugs zinc-coated • Stainless breather elements • Threaded holes that are not used are closed by means of plastic plugs Optional measures • Sealed recesses on motor (on request) • Stainless steel shaft • Stainless steel nameplate • Rust-free shrink disc (on request) • Additional priming coat on cast iron fan • Oil expansion tank and torque plates painted separately and supplied loose



Surface and corrosion protection

Structure of surface coating

Surface and corrosion protection	Corrosivity category	Surface coating	Colour
	DIN EN ISO 12944-2	Structure	
Without OKS(uncoated)		Dipping primed gearbox	
OKS-G (primed)		Dipping primed gearbox 2K PUR priming coat	
OKS-S (small)	C1	Dipping primed gearbox 2K-PUR top coat	Standard: RAL 7012 Optional: RAL Classic
OKS-M (medium)	C2	Dipping primed gearbox 2K PUR priming coat 2K-PUR top coat	
OKS-L (large)	C3		





g500-H helical gearbox

45 to 450 Nm

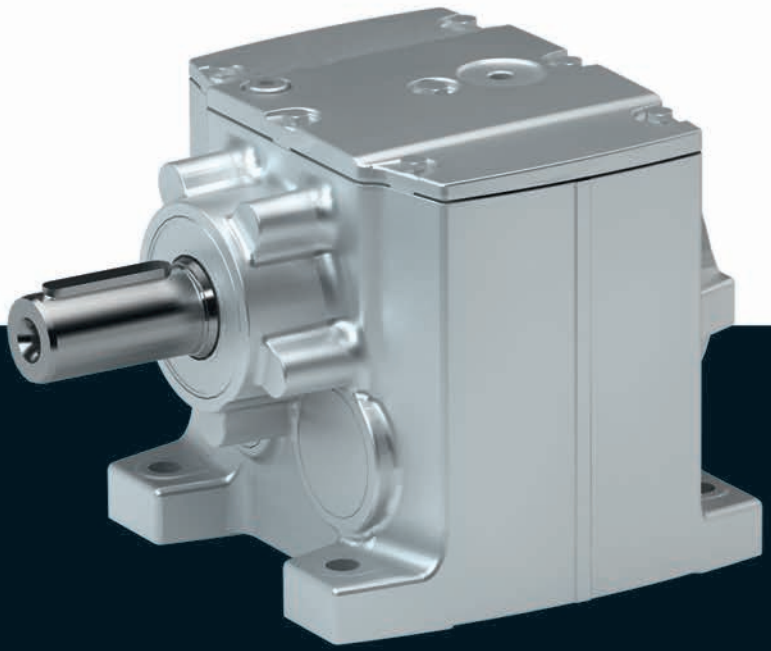

g500-H helical gearbox

Contents

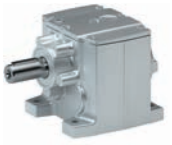

General information	List of abbreviations	6.3 - 5
	Product information	6.3 - 6
	Equipment	6.3 - 7
	The gearbox kit	6.3 - 8
	Functions and features	6.3 - 10
	Lubricants	6.3 - 11
	Ventilation	6.3 - 12
Technical data	Permissible radial and axial forces at output	6.3 - 15
	Moments of inertia	6.3 - 17
	Additional weights for gearboxes	6.3 - 20

Contents

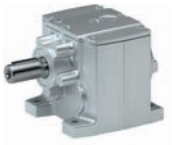

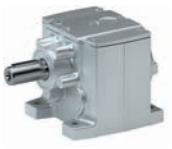

List of abbreviations

$F_{ax,max}$	[N]	Max. axial force
$F_{rad,max}$	[N]	Max. radial force
i		Ratio
J	[kgcm²]	Moment of inertia
m	[kg]	Mass

g500-H helical gearbox

General information

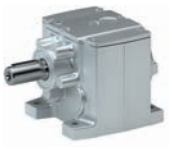

Product information

The robust helical gearboxes feature high permissible radial forces, closely stepped ratios and a low backlash. They are available in 2-pole and 3-pole design with a torque up to 450 Nm and a ratio of up to i= 370.

Versions

- Fine-scaling of size / torque provides for an optimum machine adaptation
- Standardised shaft and flange dimensions for an easy machine integration
- High efficiency

The product name

Gearbox type	Product range		Design	Rated torque [Nm]	Product
Helical gearbox	g500	-	H	45	g500-H45
				100	g500-H100
				140	g500-H140
				210	g500-H210
				320	g500-H320
				450	g500-H450

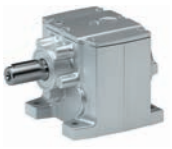

Equipment

Overview

The equipment includes all the options available as standard and all the built-on accessories of the product.

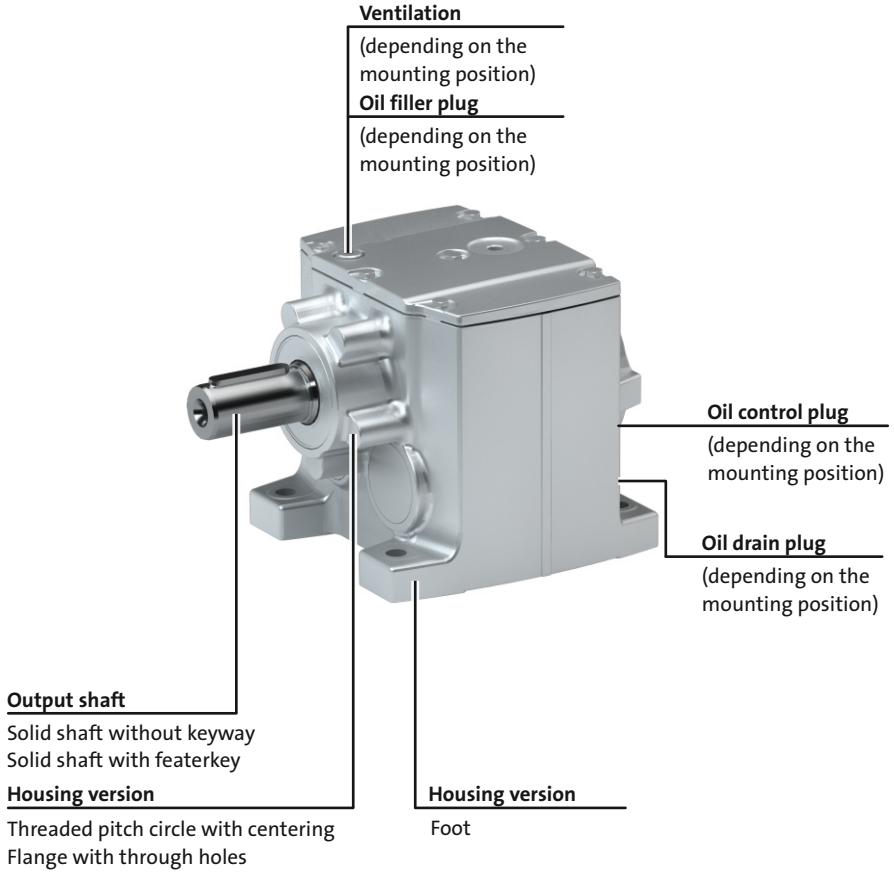

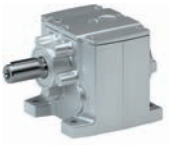

The gearbox kit

Gearbox details

Product	g500-H45	g500-H100	g500-H140	g500-H210	g500-H320	g500-H450
Driven shaft						
Solid shaft without keyway [mm]		20x40	25x50		30x60	35x70
Solid shaft with featherkey [mm]	14x28 20x40	20x40	25x50		30x60	30x60 35x70
Design	Standard stainless steel					
Gasket	Standard FPM (Viton)					
Bearing	Standard	Standard Reinforced				
Fitting grease	Not enclosed Enclosed					
Housing						
Housing version	With foot Without foot with centering	With foot With foot and centering Without foot with centering				
Output flange						
flange diameter [mm]	120/140/160			120/140/160/200	160/200	160/200/250
Lubricant						
Type	CLP 460 [1)] CLP HC 320 CLP HC 220 CLP HC 220 USDA H1					
Oil-level inspection	Without inspection With inspection					
Breather element	Without				Standard mounting position: Mounted Combined mounting position: loosely enclosed	
Backlash						
Backlash	Standard					

[1)] Not suitable for geared servo motors.

► Further information and installation feasibilities can be found in the Gearboxes chapter.

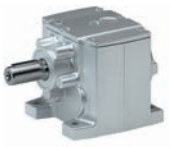

The gearbox kit

Gearbox details

Solid shaft		
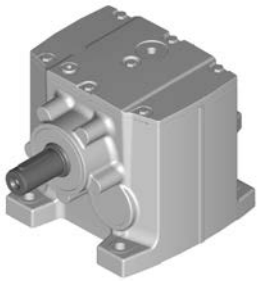 Foot mounting	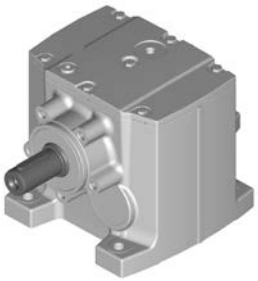 Foot mounting With centering	 Foot mounting Flange with through holes

Solid shaft	
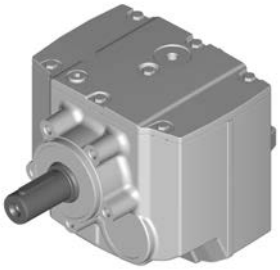 With centering	 Flange with through holes

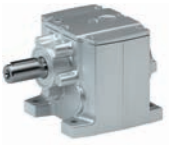

Functions and features

Product	g500-H45	g500-H100	g500-H140	g500-H210	g500-H320	g500-H450
Housing						
Design	Cuboid					
Material	Aluminium					
Solid shaft						
Design	with keyway to DIN 6885	with keyway to DIN 6885 Without keyway				
Tolerance	Shaft diameter ≤ 50 mm: k6 Shaft diameter > 50 mm: m6					
Material	Tempered steel C45 Nirosta X46Cr13					
Toothed parts						
Design	Ground tooth flanks Optimised tooth flank geometry					
Material	Case-hardened steel					
Shaft-hub joint						
	Force-fit					
Shaft sealing rings						
Design	With dust lip					
Material	NB / FP					
Bearing						
Design	Ball bearing / tapered-roller bearing depending on size and design					
Lubricants						
	Standard: mineral oil Optional: synthetic oil [1]					
Quantities	Corresponding to mounting position (see nameplate)					
Mechanical efficiency						
2-stage gearboxes [$\eta_{c=1}$]	0.96					
3-stage gearboxes [$\eta_{c=1}$]				0.95		

[1] Standard for geared servo motors.

Direction of rotation

2-stage gearboxes	3-stage gearboxes
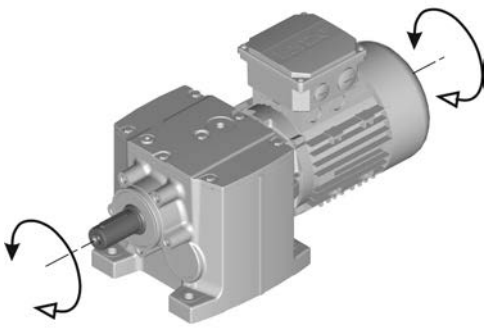	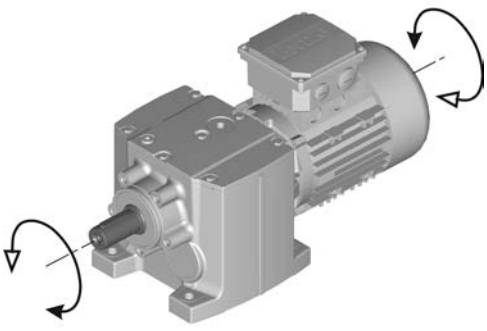



Lubricants

Lenze gearboxes and geared motors are ready for operation on delivery and are filled with lubricants specific to both the drive and the design. The mounting position and design specified in the order are key factors in choosing the volume of lubricant.

The lubricants listed in the lubricant table are approved for use in Lenze drives.

Lubricant table

Mode	CLP 460	CLP HC 320	CLP HC 220 USDA H1
Ambient temperature [°C]	0 ... +40	-25 ... +50	-20 ... +40
Specification	Mineral based oil with additives	Synthetic-based oil (synthetic hydrocarbon / poly-alpha-olefin oil)	
Changing interval	16000 operating hours not later than after three years (oil temperature 70 to 80 °C)	25000 operating hours not later than after three years (oil temperature 70 to 80 °C)	16000 operating hours not later than after three years (oil temperature 70 to 80 °C)
Fuchs	Fuchs Renolin CLP 460	Fuchs Renolin Unisyn CLP 320	bremer & leguil Cassida Fluid GL 220
Klüber	Klüberoil GEM1-460 N	Klübersynth GEM4-320 N	Klüberoil 4 UH1-220 N
Shell	Shell Omala S2 G 460	Shell Omala S4 GX HD 320	

► Please contact your Lenze sales office if you are operating at ambient temperatures in areas up to< -20 °C bzw. > or up to +40°C.

Shaft sealing rings

By default, the gearboxes come with NBR shaft sealing rings at the output end. At high speed and unfavourable ambient conditions as high temperature, reduced circulation of air etc., Lenze recommends the use of Viton shaft sealing rings.

Please consider this in your order.

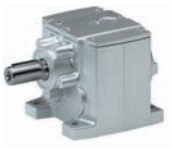

Ventilation

Non-ventilated gearboxes

No ventilation is required for gearboxes g500-H45 to H210.

Ventilated gearboxes

The g500-H320 H450 gearbox is supplied with a breather element as standard.

Gearboxes in combined mounting position

To reduce the number of different versions, the gearboxes can also be ordered with combined mounting positions.
Depending on the gearbox in question, the following combinations are available:
- g500-H45 in combined mounting position ABCDEF
- g500-H100 ... H450 in combined mounting position AEF

The breather elements are supplied loose.

Ventilation

Position of ventilation, sealing elements and oil level check

► **A ... F** mounting position

A	B
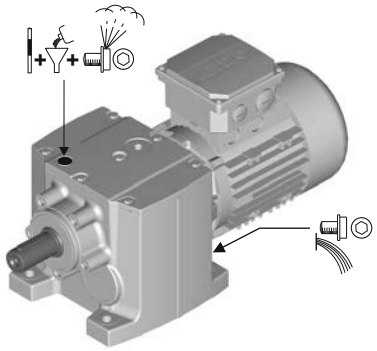	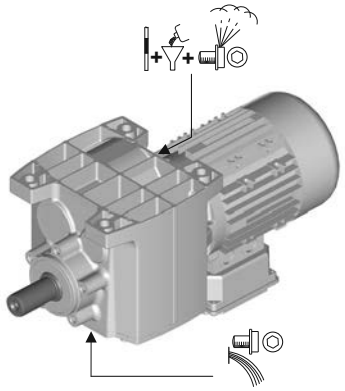
C	**D**
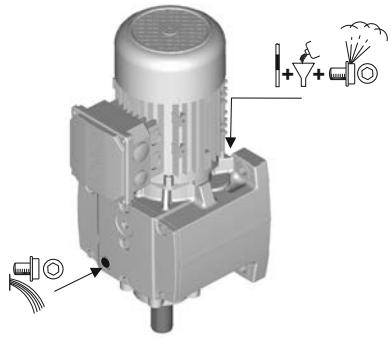	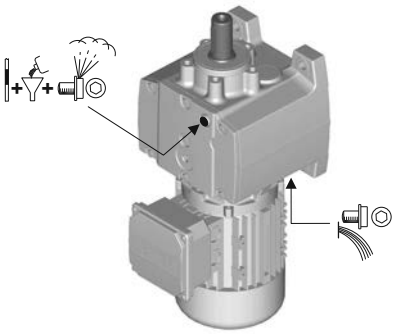
E	**F**
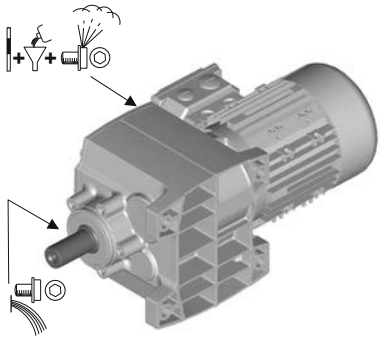	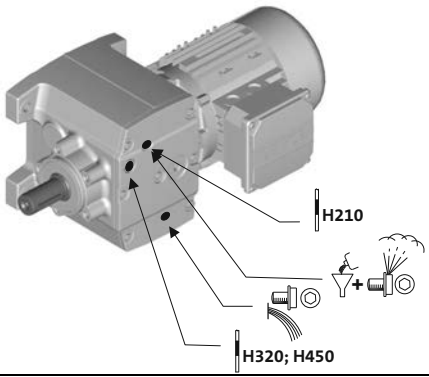

	Filling		Drain
	Ventilation		Check

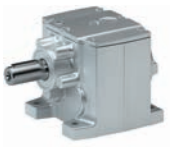

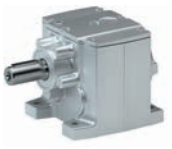

Permissible radial and axial forces at output

Permissible radial force

$F_{rad,perm} = f_w \times F_{rad,max}$

► If F_{rad} **and** $F_{ax} \neq 0$, please contact Lenze.

Permissible axial force

If there is no radial force, the maximum permissible axial force is 50 % of the table value $F_{rad,max}$

Application of forces

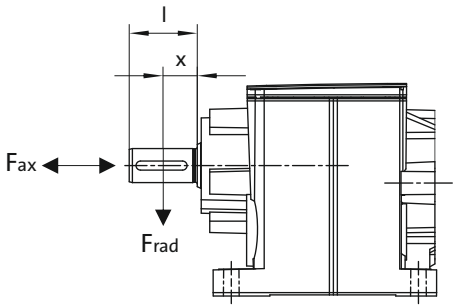

Additional load factor f_w at output shaft

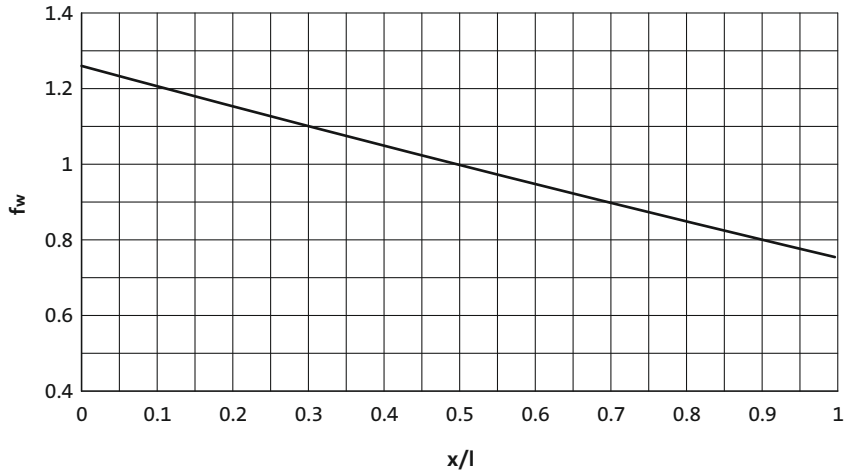

6.3

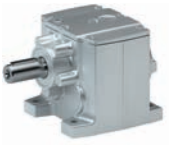

Permissible radial and axial forces at output

The values given in the table refer to the center shaft end force application point and are minimum values calculated according to the most unfavourable conditions (force application angle, mounting position, direction of rotation). The values were calculated for the motor/gearbox combination with a load capacity of c= 1.3 and an input speed of 1400 rpm.

► If the torque is transmitted via the flange face, max 50 % of the radial force $F_{rad,max}$ are permissible.

In case of different operating conditions, considerably higher forces can be transmitted. Please contact Lenze.

Product	n_2 [r/min]									
	1000	630	400	250	160	100	63	40	25	≤16

	Max. radial force, Solid shaft									
	$F_{rad,max}$	$F_{rad,max}$	$F_{rad,max}$	$F_{rad,max}$	$F_{rad,max}$	$F_{rad,max}$	$F_{rad,max}$	$F_{rad,max}$	$F_{rad,max}$	$F_{rad,max}$
	[N]	[N]	[N]	[N]	[N]	[N]	[N]	[N]	[N]	[N]
g500-H45	300	370	630	710	800	920	1100	1400	1500	1500
g500-H100	820	1000	1200	1450	1750	2120	2560	2650	2650	2650
g500-H140	1210	1750	2000	2300	2700	3300	3800	3800	3800	3800
g500-H210	1150	1600	2020	2390	2780	3360	3900	3900	4360	4800
g500-H320	1500	1900	2200	2600	3000	3500	4100	4800	5600	5700
g500-H450	1900	2200	2560	3000	3470	4050	4720	5480	6610	7100

	Max. radial force, Solid shaft (reinforced bearings))									
	$F_{rad,max}$	$F_{rad,max}$	$F_{rad,max}$	$F_{rad,max}$	$F_{rad,max}$	$F_{rad,max}$	$F_{rad,max}$	$F_{rad,max}$	$F_{rad,max}$	$F_{rad,max}$
	[N]	[N]	[N]	[N]	[N]	[N]	[N]	[N]	[N]	[N]
g500-H100	1020	1250	1500	1810	2190	2650	3200	3300	3300	3300
g500-H140	1510	2180	2500	2870	3370	4120	4750	4750	4750	4750
g500-H210	1430	2000	2520	2980	3470	4200	4870	4870	5450	6000
g500-H320	1870	2370	2750	3250	3750	4370	5120	6000	7000	7100
g500-H450	2370	2750	3200	3750	4330	5060	5900	6850	8260	8870

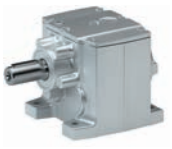

Moments of inertia

- The moments of inertia relate to the drive shaft of the gearbox.
- The total moment of inertia is calculated by adding the values of the gearbox, motor and accessories.

2-stage gearboxes

Product	Ratio	Moment of inertia
	i	J
		[kgcm²]
g500-H45	2.597	0.26
	3.413	0.17
	4.368	0.12
	5.312	0.18
	5.965	0.17
	6.982	0.12
	7.840	0.12
	8.935	0.089
	10.033	0.086
	11.429	0.059
	12.833	0.057
	14.836	0.041
	16.660	0.040
	19.013	0.028
	21.350	0.027
	24.595	0.019
	27.618	0.019
	32.000	0.012
	35.933	0.012
	41.455	0.008
	46.550	0.008
	52.909	0.005
	59.413	0.005
g500-H100	3.354	0.53
	4.600	0.34
	5.167	0.43
	5.887	0.24
	6.440	0.21
	7.086	0.28
	8.214	0.15
	9.068	0.20
	10.063	0.11
	11.360	0.17
	12.653	0.13
	14.490	0.13
	15.500	0.10
	17.750	0.10
	19.486	0.069
	22.314	0.067
	25.095	0.048
	28.738	0.047
	31.805	0.032
	36.422	0.031
	39.857	0.022
	45.643	0.022
	52.510	0.014
	60.133	0.013

Product	Ratio	Moment of inertia
	i	J
		[kgcm²]
g500-H140	3.267	0.90
	4.480	0.54
	5.733	0.36
	6.272	0.31
	7.269	0.51
	8.000	0.21
	9.029	0.34
	9.800	0.15
	11.554	0.24
	12.640	0.21
	13.957	0.20
	16.122	0.15
	17.802	0.14
	19.750	0.11
	21.808	0.11
	24.829	0.077
	27.415	0.074
	31.976	0.053
	35.308	0.051
	40.526	0.035
	44.748	0.034
	50.786	0.024
	56.077	0.024
	66.908	0.015
	73.879	0.014
g500-H210	3.389	1.53
	4.648	0.98
	5.583	1.24
	6.250	1.18
	7.657	0.82
	8.571	0.79
	9.799	0.59
	10.720	0.51
	12.000	0.50
	13.673	0.38
	15.306	0.36
	16.750	0.29
	18.750	0.28
	21.802	0.18
	24.405	0.18
	27.119	0.13
	30.357	0.13
	35.095	0.085
	39.286	0.083
	42.593	0.062
	47.679	0.061
	54.438	0.040
	60.938	0.039

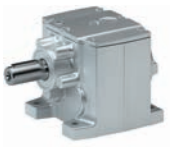

Moments of inertia

2-stage gearboxes

Product	Ratio	Moment of inertia
	i	J
		[kgcm²]
g500-H320	3.389	1.23
	4.648	0.81
	6.083	1.66
	6.910	1.51
	8.343	1.04
	9.477	0.97
	10.677	0.72
	11.680	0.63
	12.128	0.68
	13.268	0.59
	14.898	0.44
	16.923	0.42
	18.250	0.34
	20.731	0.32
	23.754	0.21
	26.983	0.20
	29.548	0.15
	33.564	0.15
	38.238	0.095
	43.436	0.092
	46.407	0.070
	52.715	0.067

Product	Ratio	Moment of inertia
	i	J
		[kgcm²]
g500-H450	3.444	4.94
	4.724	3.21
	5.678	3.64
	6.045	2.23
	6.613	1.98
	7.787	2.52
	8.800	2.40
	9.965	1.81
	11.262	1.74
	12.320	1.56
	13.905	1.21
	15.714	1.17
	17.033	0.95
	19.250	0.93
	22.170	0.53
	25.056	0.51
	27.578	0.39
	31.167	0.38
	35.689	0.24
	40.333	0.24
	43.313	0.18
	48.950	0.17
	54.750	0.12
	61.875	0.11

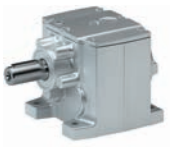

Moments of inertia

3-stage gearboxes

Product	Ratio	Moment of inertia
	i	J
		[kgcm²]
g500-H210	43.390	0.13
	48.571	0.13
	55.529	0.088
	62.160	0.088
	71.026	0.060
	79.507	0.059
	92.205	0.042
	103.214	0.042
	118.162	0.029
	132.270	0.029
	152.853	0.020
	198.873	0.014
	222.619	0.013
	257.631	0.003
	288.393	0.003
	368.080	0.006
g500-H320	47.276	0.13
	53.703	0.13
	60.502	0.093
	68.726	0.091
	77.387	0.062
	87.906	0.061
	100.462	0.044
	114.118	0.043
	128.743	0.030
	146.244	0.030
	166.541	0.021
	216.683	0.014
	246.137	0.014
	280.702	0.003
	318.859	0.003

Product	Ratio	Moment of inertia
	i	J
		[kgcm²]
g500-H450	44.124	0.36
	49.867	0.36
	56.469	0.25
	61.774	0.22
	69.813	0.22
	78.794	0.16
	89.048	0.15
	96.522	0.12
	109.083	0.12
	121.342	0.079
	137.133	0.078
	156.274	0.054
	176.611	0.054
	198.059	0.036
	223.833	0.035
	248.200	0.025
	280.500	0.025
	326.994	0.015
	369.548	0.015

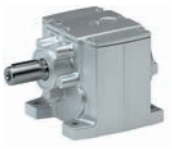

Additional weights for gearboxes

Product			g500-H45	g500-H100	g500-H140	g500-H210	g500-H320	g500-H450
Mass								
Foot	m	[kg]	0.1	0.1	0.2	0.1	0.1	0.2
Flange	m	[kg]	0.3	0.4	0.6	0.6	0.8	0.9

g500-S shaft-mounted helical geared motors

0.12 to 0.55 kW
0.75 to 7.5 kW (efficiency class IE2)

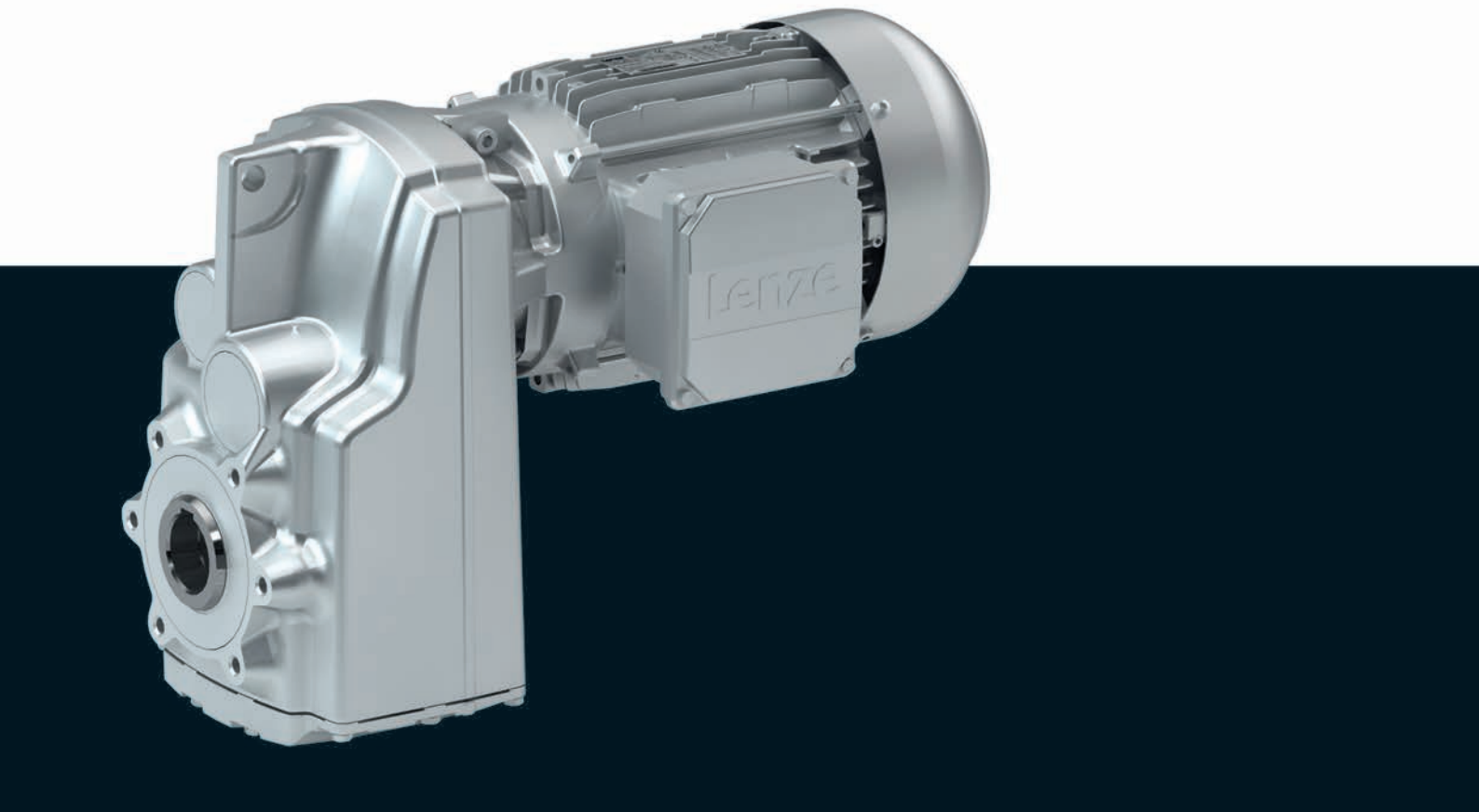

g500-S shaft-mounted helical geared motors

Contents



General information	List of abbreviations	6.5 - 5
	Product information	6.5 - 6
	Equipment	6.5 - 7
	The gearbox kit	6.5 - 8
	Dimensioning	6.5 - 14
Technical data	Selection tables, notes	6.5 - 19
	Selection tables, 4-pole motors	6.5 - 21
	Selection tables, 2-pole motors	6.5 - 41
	Selection tables, 6-pole motors	6.5 - 45
	Dimensions, notes	6.5 - 53
	Dimensions, 4-pole motors	6.5 - 54
	Dimensions, 2-pole motors	6.5 - 74
	Dimensions, 6-pole motors	6.5 - 90
	Weights, 4-pole motors	6.5 - 106
	Weights, 2-pole motors	6.5 - 106
	Weights, 6-pole motors	6.5 - 107
	Surface and corrosion protection	6.5 - 108

Contents





List of abbreviations

c		Load capacity
i		Ratio
m	[kg]	Mass
M_2	[Nm]	Output torque
M_{22}	[Nm]	Output torque
$M_{a_,1}$	[Nm]	Starting torque
$M_{a_,2}$	[Nm]	Starting torque
n_2	[r/min]	Output speed
n_{21}	[r/min]	Output speed
n_{22}	[r/min]	Output speed

CCC	China Compulsory Certificate
CE	Communauté Européenne
CSA	Canadian Standards Association
cURus	Combined certification marks of UL for the USA and Canada
DIN	Deutsches Institut für Normung e.V.
EMC	Electromagnetic compatibility
EN	European standard
GOST	Certificate for Russian Federation
IEC	International Electrotechnical Commission
IM	International Mounting Code
IP	International Protection Code
NEMA	National Electrical Manufacturers Association
UL	Underwriters Laboratory Listed Product
UR	Underwriters Laboratory Recognized Product
VDE	Verband deutscher Elektrotechniker (Association of German Electrical Engineers)

g500-S shaft-mounted helical geared motors

General information



Product information

In combination with three-phase AC motors, our shaft-mounted helical gearboxes form a compact and powerful drive unit. Numerous options at the input and output end provide for the drive to be exactly adapted to your application.

The slim shaft-mounted helical gearboxes feature high reliable radial forces, closely stepped gear reductions and a low backlash. They are available in 2-pole and 3-pole design with a torque up to 660 Nm and a ratio of up to i= 495.

Versions

- Slimline design saves installation space of the machine
- Solid shaft, hollow shaft and shrink disc for direct integration into the machine
- High accuracy with axial output provide for the highest efficiency
- With three-phase AC motors in the power range 0.12 ... 0.55 kW
  With IE2 three-phase AC motors in the power range 0.75 ... 7.5 kW

Inverters for motor-proximity installation

The Drive Package with decentralised Inverter Drives 8400 motec covers a power range up to 7.5 kW.

The product name

Gearbox type	Product range		Design	Rated torque [Nm]	Product
Shaft-mounted helical gearbox	g500	-	S	130	g500-S130
				220	g500-S220
				400	g500-S400
				660	g500-S660



Equipment

Overview

The equipment includes all the options available as standard and all the built-on accessories of the product.

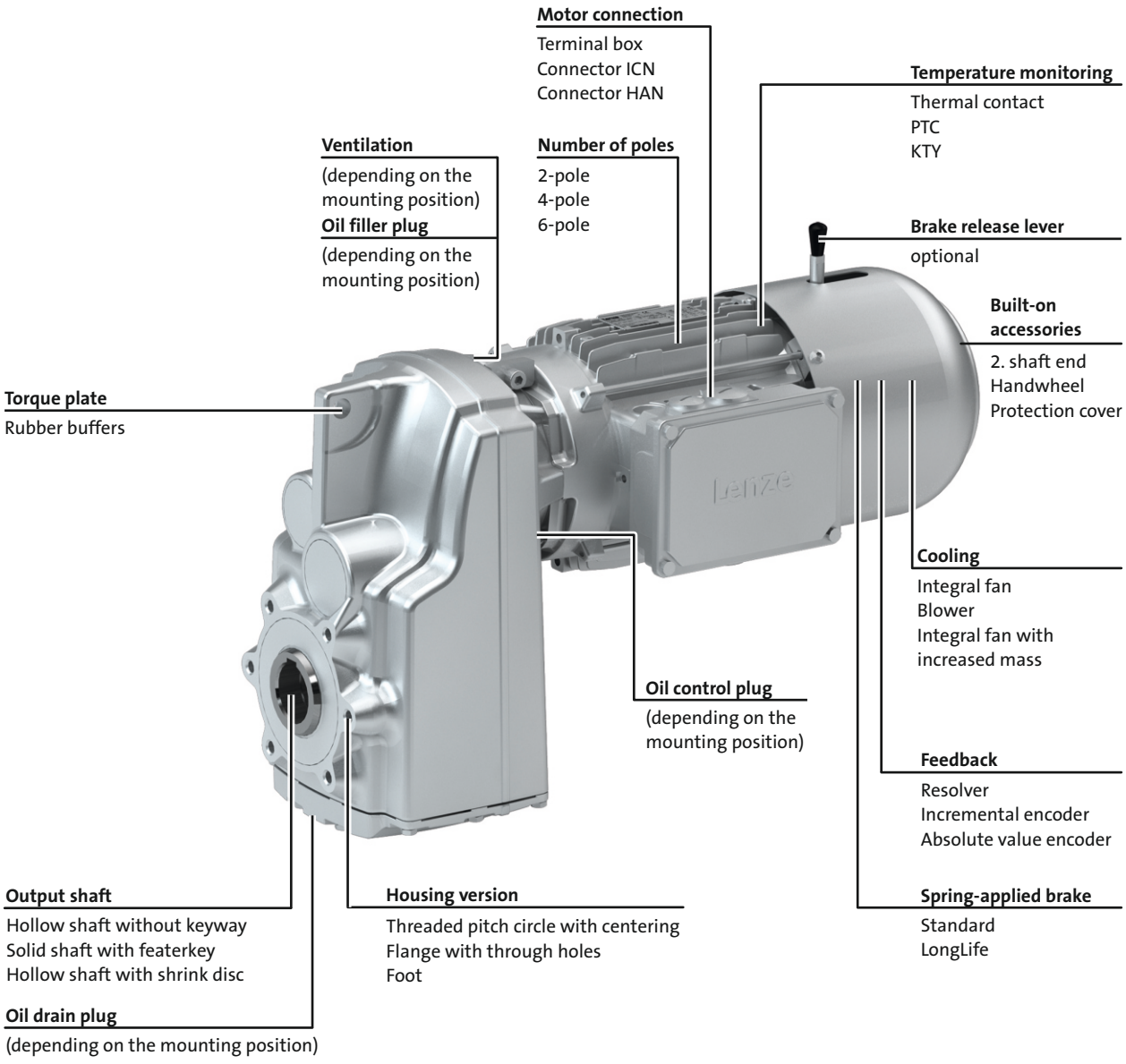



The gearbox kit

Geared motor

Product	g500-S130	g500-S220	g500-S400	g500-S660
Motor type				
Efficiency class IE1				
Efficiency class IE2	MH□MA AC motor			
4-pole motor				
0.06 - 0.09 kW				
0.12 - 0.25 kW	063			
0.37 - 0.55 kW	071			
0.75 kW	080			
1.1 - 1.5 kW	090			
2.2 - 3.0 kW		100		
4.0 kW			112	
5.5 - 7.5 kW				132
2-pole motor				
0.18 - 0.25 kW	063			
0.37 - 0.55 kW	071			
6-pole motor				
0.18 - 0.25 kW	071			
0.37 - 0.55 kW	080			
Technical data				
Rated power	See selection table			
Mains voltage	230/400 V ; 230 V; 460 V			
Mains frequency	50 Hz; 60 Hz; 60 Hz			
Output torque	See selection table			
Output speed	See selection table			
Ratio	See selection table			
Load capacity	See selection table			
Mounting position				
Standard	A/B/C/D/E/F			
Combined	AEF			
Colour				
	Not coated Primed Paint in various corrosion-protection designs in accordance with RAL colours			
Surface and corrosion protection				
	Without OKS(uncoated) OKS-G (primed) OKS-S (small) OKS-M (medium) OKS-L (large)			



The gearbox kit

Mounting positions

► Mounting position (A to F) and position of system blocks (1 to 6)

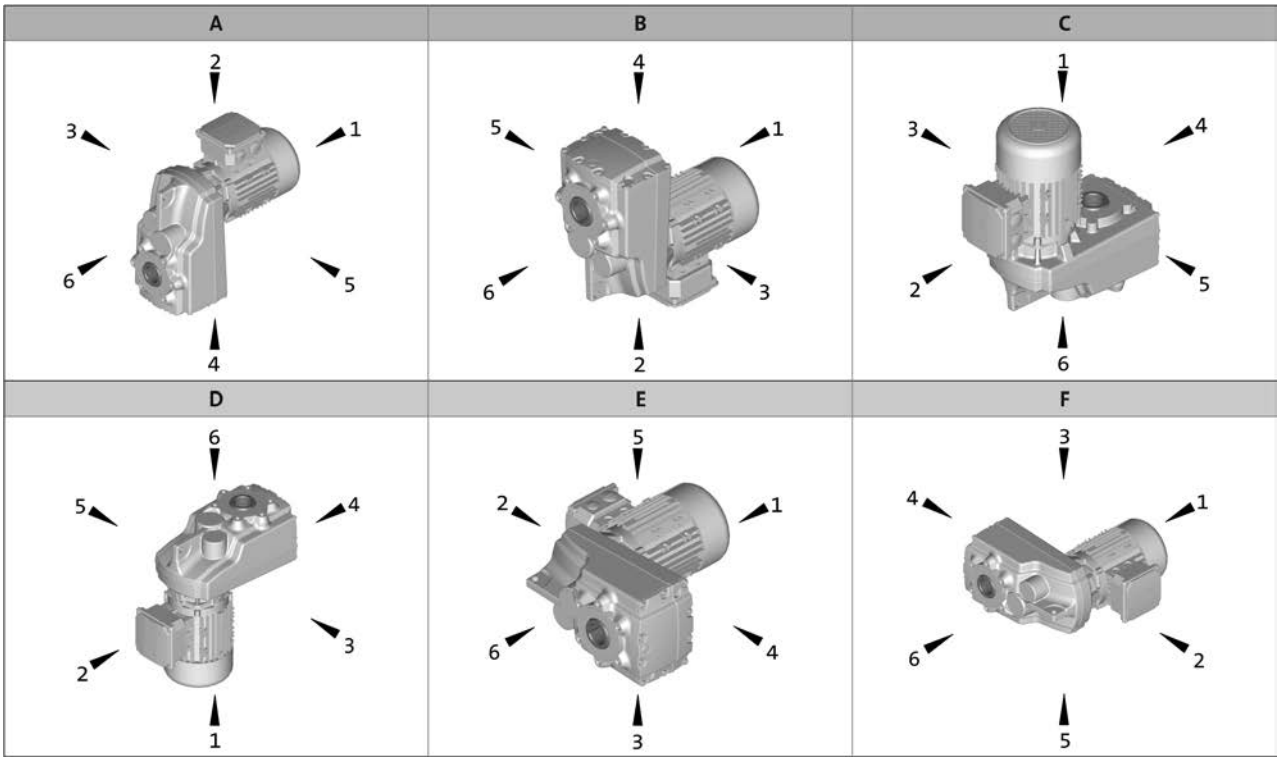

Hollow shaft: 0
Solid shaft: 6
Hollow shaft with shrink disc: 1, 6

Without foot: 0
Foot: 3, 4
Terminal box / motec: 2, 3, 4, 5



The gearbox kit

Motor details

Product	MD□MA□□				MH□MA□□				
	063-02 063-22 063-11 063-12 063-31 063-32 063-42	071-11 071-12 071-13 071-31 071-32 071-33	071-42	080-13 080-33	080-32	090-12	100-12 100-32	112-22	132-12 132-22
Connection type	Terminal box ICN connector HAN-10E connector HAN-Modular connector								
Spring-applied brake									
Rated torque [Nm]	4		4 8	8 16			16 32	32 60	60 80
Brake voltage [V]	DC 24/180/205 AC 230/400/460								
Brake design	Standard LongLife								
	Standard Overexcited Cold Brake								
Options	Manual release lever Low noise With cover ring								
Feedback	With absolute value encoder With incremental encoder With resolver								
Cooling	Without blower/integral fan Blower Integral fan with increased mass								
Temperature monitoring	TKO thermal contact KTY83-110 thermal detector KTY84-130 thermal detector PTC thermistor								
Approval	cURus CCC								
Degree of protection	IP55								
Further options	Protection cover 2nd shaft end Handwheel								

► Further information and installation feasibilities can be found in the Motors chapter.



The gearbox kit

Motor details

Connection type



Terminal box



ICN connector



HAN connector

Cooling: integral fan



Without built-on accessories

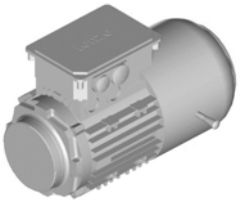

With spring-applied brake
With or without manual release lever

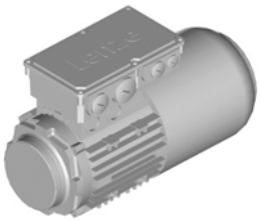

With feedback
With feedback and spring-applied brake

Cooling: blower

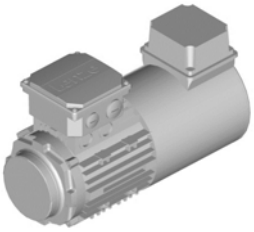

Without built-on accessories

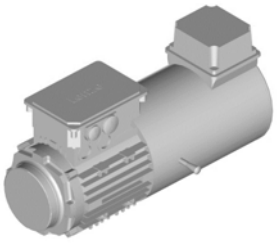

With spring-applied brake
With or without manual release lever

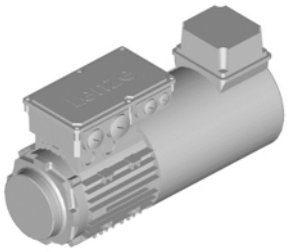

With feedback
With feedback and spring-applied brake

Further options



With 2nd shaft end
Only integral fan

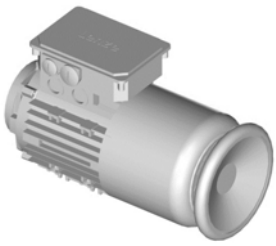

With handwheel
Only integral fan

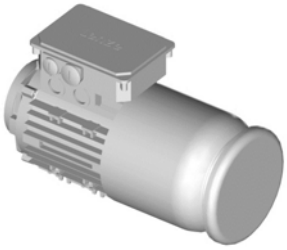

With protection cover

6.5



The gearbox kit

Gearbox details

Product	g500-S130	g500-S220	g500-S400	g500-S660
Driven shaft				
Solid shaft with featherkey [mm]	25x50		30x60	35x70 40x80
Hollow shaft with keyway [mm]	25	25/30	30/35	40/45
Hollow shaft with shrink disc [mm]	25	25/30	35	40
Design	Standard stainless steel			
Gasket	Standard FPM (Viton)			
Bearing	Standard			
Fitting grease	Not enclosed Enclosed			
Housing				
Housing version	With foot without centring With centering			
Output flange				
flange diameter [mm]	160		200	200/250 [1]
Lubricant				
Type	CLP 460 [2] CLP HC 320 CLP HC 220 CLP HC 220 USDA H1			
Oil-level inspection	Without inspection With inspection			
Breather element	Without		Standard mounting position: Mounted Combined mounting position: loosely enclosed	
Backlash				
Backlash	Standard			
Accessories				
Torque plate	Rubber buffers			
Shaft cover	Shrink disc: Rotating cover Shrink disc: Fixed cover			

[1] 200 mm flange diameter only possible on hollow shaft version.
[2] Not suitable for geared servo motors.

6.5

► Further information and installation feasibilities can be found in the Gearboxes chapter.



The gearbox kit

Gearbox details

Solid shaft

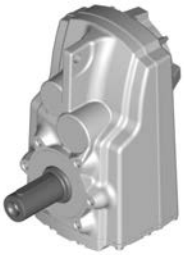
without centring

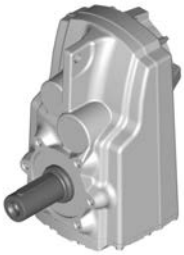
With centering


Flange with through holes

Hollow shaft


without centring


With centering


Flange with through holes

Hollow shaft with shrink disc


without centring


With centering


Flange with through holes

Accessories


Foot mounting


With rubber buffer

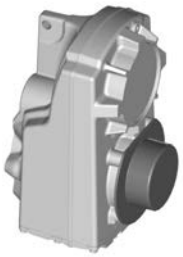
Shrink disc cover

6.5



Dimensioning

General information about the data provided in this catalogue

The powers, torques and speeds specified in this catalogue are rounded values and are valid under the following conditions:

- Operating time/day = 8 h (100% OT)
- Duty class I for up to 10 switching operations/h
- Mounting positions and designs in this catalogue
- Standard lubricant
- T_{amb} = 20 °C for gearboxes,
  T_{amb} = 40 °C for motors (in accordance with EN 60034)
- Site altitude < = 1000 m amsl
- The selection tables provide the permissible mechanical powers and torques. For notes on the thermal power limit, see chapter drive dimensioning.
- The rated power specified for motors and geared motors applies to operating mode S1 (in accordance with EN 60034).

Under different operating conditions, the values obtained may vary from those listed here.
In the case of extreme operating conditions, please consult your Lenze sales office.



Dimensioning

Thermal power limit

The thermal power limit, defined by the heat balance, limits the permissible gearbox continuous power. It may be less than the mechanical power ratings listed in the selection tables.

The thermal power limit is affected by:
- the churning losses in the lubricant. These are determined by the mounting position and the circumferential speed of the gears;
- the load and the speed
- the ambient conditions: temperature, air circulation, input or dissipation via shafts and the foundation

If the following input speeds n_1 are exceeded, please contact Lenze:

Motor frame size	Mounting position A, B, E, F	Mounting position C, D
063 ... 100	4000 r/min	3000 r/min
112 ... 132	3000 r/min	1500 r/min

► For a short period of time up to 5 min, 30 % higher speeds are permissible

Possible ways of extending the application area

- synthetic lubricant (option)
- shaft sealing rings made from FP material/Viton (option)
- reduction in lubricant quantity
- cooling of the geared motor by means of air convection on the machine/system



Dimensioning

Load capacity and application factor

Load capacity c of gearbox
Rated value for the load capacity of Lenze geared motors.
- c is the ratio of the permissible rated torque of the gearbox to the rated torque supplied by the drive component (e.g. the built-in Lenze motor).
- The value of c must always be greater than the value of the application factor k calculated for the application.

Application factor k (according to DIN 3990)
Takes into account the influence of temporally variable loads which are actually present during the anticipated operating time of gearboxes and geared motors.
k is determined by:
- the type of load
- the load intensity
- temporal influences

Duty class	Load type
I	Smooth operation, small or light jolts
II	Uneven operation, average jolts
III	Uneven operation, severe jolts and/or alternating load

Application factor k

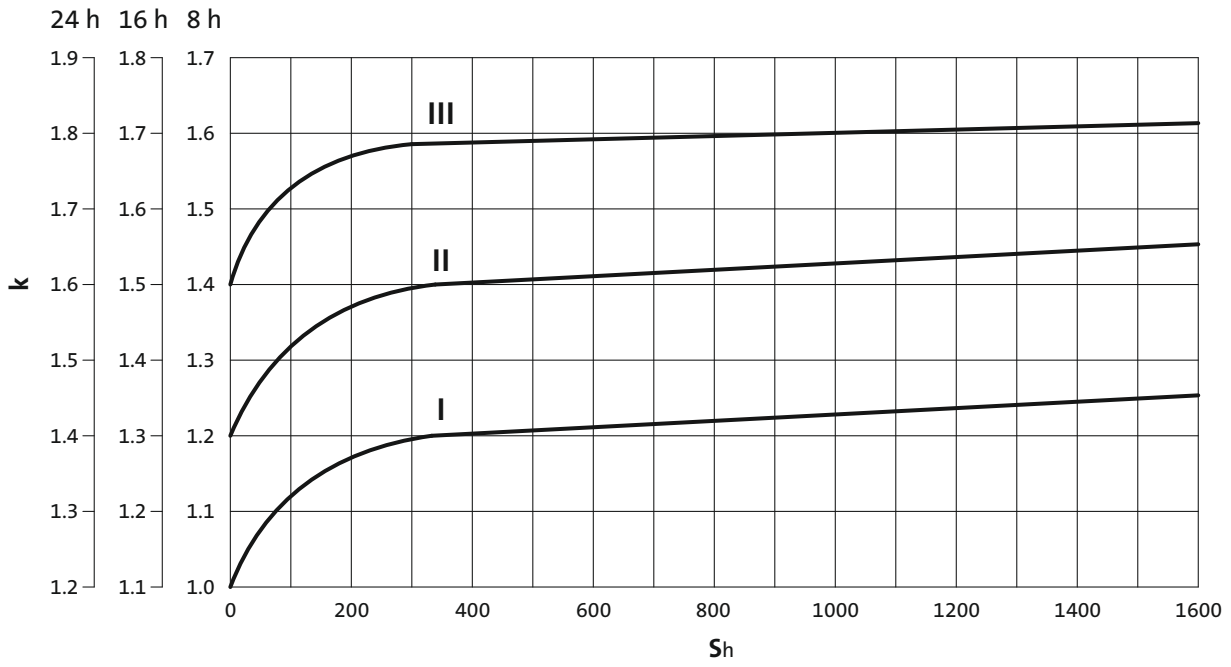

► S_h= switchings/h



Dimensioning

Torque derating at low motor frequencies

Motor size-dependent torque reduction, taking into account the thermal response during operation on the inverter.

Torque characteristics

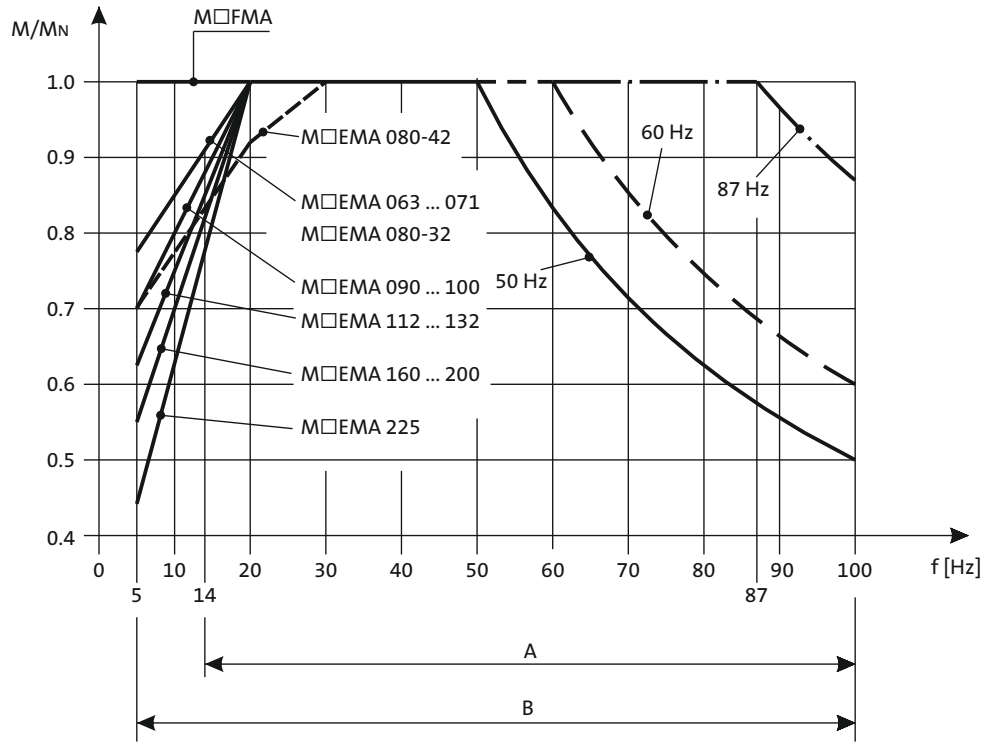

A = Operation with integral fan and brake
B = Operation with integral fan and brake control "Holding current reduction"

You can use the Drive Solution Designer for precise drive dimensioning.

The Drive Solution Designer helps you to carry out a fast and high-quality drive dimensioning.
The software includes well-founded and proven knowledge on drive applications and electro-mechanical drive components.

Please contact your Lenze sales office.



Dimensioning

Weights

The values given in the tables consider the following gearbox/motor combination:
- Gearbox with hollow shaft without foot and flange including lubricant amount for mounting position A
- Motor without built-on accessories (with integral fan)

For versions deviating from this, additional weights have to be considered.

The respective values can be found for:
- Geared motors without built-on accessories
  > Chapter: Geared motors/Technical data
- Gearbox options
  > Chapter: Gearboxes/Technical data and accessories
- Motor options: Spring-applied brake, feedback, 2. Shaft end, handwheel and increased centrifugal mass
  > Chapter: Motors/Accessories

Moments of inertia

The given moments of inertia of the gearbox refer to the drive shaft. The influence of the ratio (i^2) has been considered in the data.

When the total moment of inertia of the geared motor is calculated, the values of the gearbox, motor and accessories have to be added.

The respective values can be found for:
- Gearboxes
  > Chapter: Gearbox/Technical data
- Motors without built-on accessories
  > Chapter: Motors/Technical data/Rated data
- Motor options: Spring-applied brake, feedback, 2. Shaft end, handwheel and increased centrifugal mass
  > Chapter: Motors/Accessories



Selection tables, notes

Notes on the selection tables with 4-pole motors

The selection tables show the available combinations of gearbox type, number of stages, ratio and motor. They are used only to provide basic orientation.
The following legend indicates the structure of the selection tables.

Rated power Prated of the drive motor depending on the rated frequency

50 Hz: P_N = 0.12 kW
87 Hz: P_N = 0.21 kW

2-stufige Getriebe ← **Number of the gear stage of the gearbox**

Torque diagram

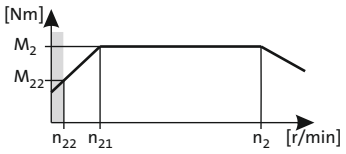

Mains operation 400 V, 50 Hz			Inverter operation 5 Hz -		- 20 Hz		- 50 Hz (1:10)			- 87 Hz (1:17.4)			i	Product		
n_2 [r/min]	M_2 [Nm]	c	n_{22} [r/min]	M_{22} [Nm]	n_{21} [r/min]	M_2 [Nm]	n_2 [r/min]	M_2 [Nm]	c	n_2 [r/min]	M_2 [Nm]	c		g500	MD□MA□□	
45	24	5.3	4.6	19	19	24	45	24	5.3	81	24	5.4	31.387	-S130	063-12	65
40	28	4.7	4.1	21	17	27	40	28	4.7	71	27	4.8	35.493	-S130	063-12	65

Product Gearbox

Product Motor

Ratio i

Page number for dimensions

Load capacity c of the gearbox
c is the ratio between the permissible rated torque of the gearbox and the rated torque of the three-phase AC motor (converted to the driven shaft).
c must be always higher than the service factor **k** determined for the application **k**.

$$c = \frac{M_{2,zul}}{M_{1N} \cdot i \cdot \eta_{Getr}} > k$$

Mains operation
Output speed **n2**
Output torque **M2**

Inverter operation
The speed and torque data are valid for self-ventilated and forced ventilated drives. Forced ventilated drives can always output the torque **M2** in the entire setting ranges. In the case of self-ventilated drives, a reduction to **M22** is required in the lower speed range.

The following applies to self-ventilated geared motors:
n22 is the minimum speed where the torque **M22** is permissible, from **n21** to **n2**, the maximum torque is **M2**
The following applies to forced ventilated geared motors:
From the minimum speed **n22** to **n2**, the maximum torque is **M2**

Motor voltages

The power values and torques indicated in the selection tables relate to the following motor voltages:
- 50 Hz : Δ 230 V / Y 400 V
- 60 Hz : 230 V or 460 V
- 87 Hz : Δ 400 V

Operation at 87 Hz

In 87 Hz operation, the three-phase AC motor (which is designed for a voltage of Δ 230 V / Y 400 V at 50 Hz) is operated on an inverter with 400 V rated voltage in a delta connection. It is important to note here that the inverter must be configured for 87Hz output.
This offers the following advantages over 50 Hz operation:
- the setting range of the motor is increased by a factor of 1.73.
- the motor can then provide around 1.73 times greater output, which in turn allows a smaller and more affordable motor to be selected for the application.
- the efficiency of the motor is also improved.



Selection tables, notes

Notes on the selection tables with 2-pole and 6-pole motors

The selection tables show the available combinations of gearbox type, number of stages, ratio and motor. They are used only to provide basic orientation.
The following legend indicates the structure of the selection tables.

Rated power Prated of the drive motor depending on the rated frequency

50 Hz: P_N = 0.18 kW

2-stufige Getriebe ← **Number of the gear stage of the gearbox**

Mains operation 400 V, 50 Hz			i	Product		
n_2 [r/min]	M_2 [Nm]	c		g500	MD□MA□□	
68	25	5.3	40.422	-S130	063-11	85
60	28	4.7	45.711	-S130	063-11	85

Mains operation
Output speed **n_2**
Output torque **M_2**

Load capacity c of the gearbox
c is the ratio between the permissible rated torque of the gearbox and the rated torque of the three-phase AC motor (converted to the driven shaft).
c must be always higher than the service factor **k** determined for the application **k**.

$$c = \frac{M_{2,zul}}{M_{1N} \cdot i \cdot \eta_{Getr}} > k$$

Ratio i

Product Gearbox

Product Motor

Page number for dimensions

Motor voltages

The power values and torques indicated in the selection tables relate to the following motor voltages:
- 50 Hz : Δ 230 V / Y 400 V
- 60 Hz : 230 V or 460 V



Selection tables, 4-pole motors

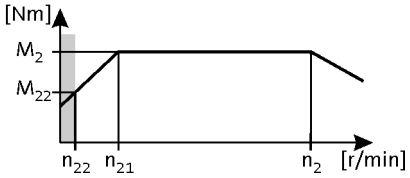

50 Hz: P_N = 0.12 kW
87 Hz: P_N = 0.21 kW

2-stage gearboxes

Mains operation 400 V, 50 Hz			Inverter operation 5 Hz -		- 20 Hz		- 50 Hz (1:10)			- 87 Hz (1:17.4)			i	Product		
n_2 [r/min]	M_2 [Nm]	c	n_{22} [r/min]	M_{22} [Nm]	n_{21} [r/min]	M_2 [Nm]	n_2 [r/min]	M_2 [Nm]	c	n_2 [r/min]	M_2 [Nm]	c		g500	MD□MA□□	
45	24	5.3	4.6	19	19	24	45	24	5.3	81	24	5.4	31.387	-S130	063-12	54
40	28	4.7	4.1	21	17	27	40	28	4.7	71	27	4.8	35.493	-S130	063-12	54
35	32	4.1	3.6	24	15	31	35	32	4.1	63	31	4.2	40.422	-S130	063-12	54
31	36	3.7	3.2	28	13	35	31	36	3.7	56	35	3.7	45.711	-S130	063-12	54
28	40	3.3	2.8	31	12	39	28	40	3.3	50	39	3.3	51.230	-S130	063-12	54
25	45	2.9	2.5	35	10	44	25	45	2.9	44	44	2.9	57.933	-S130	063-12	54
22	50	2.6	2.3	39	9.3	49	22	50	2.6	40	49	2.6	64.200	-S130	063-12	54
22	51	3.1	2.2	40	9.1	51	22	51	3.1	38	51	3.2	65.975	-S220	063-12	58
20	57	2.3	2.0	44	8.3	56	20	57	2.3	35	56	2.3	72.600	-S130	063-12	54
19	58	3.1	1.9	45	8.0	57	19	58	3.1	34	57	3.2	74.750	-S220	063-12	58
17	66	1.6	1.7	51	7.1	65	17	66	1.6	30	65	1.6	84.581	-S130	063-12	54
15	75	1.5	1.5	58	6.3	73	15	75	1.5	27	73	1.6	95.648	-S130	063-12	54

3-stage gearboxes

Mains operation 400 V, 50 Hz			Inverter operation 5 Hz -		- 20 Hz		- 50 Hz (1:10)			- 87 Hz (1:17.4)			i	Product		
n_2 [r/min]	M_2 [Nm]	c	n_{22} [r/min]	M_{22} [Nm]	n_{21} [r/min]	M_2 [Nm]	n_2 [r/min]	M_2 [Nm]	c	n_2 [r/min]	M_2 [Nm]	c		g500	MD□MA□□	
15	75	2.9	1.5	58	6.2	74	15	75	2.9	26	74	3.0	97.528	-S220	063-12	58
13	86	2.6	1.3	66	5.4	84	13	86	2.6	23	84	2.6	111.747	-S220	063-12	58
11	97	2.3	1.1	75	4.7	96	11	97	2.3	20	96	2.3	126.610	-S220	063-12	58
10	110	2.0	1.0	85	4.2	108	10	110	2.0	18	108	2.0	143.205	-S220	063-12	58
8.8	125	1.8	0.9	96	3.7	123	8.8	125	1.8	16	123	1.8	162.252	-S220	063-12	58
8.0	137	2.9	0.8	106	3.4	135	8.0	137	2.9	14	135	3.0	178.531	-S400	063-12	62
7.7	142	1.6	0.8	110	3.2	140	7.7	142	1.6	14	140	1.6	185.248	-S220	063-12	58
7.0	157	2.6	0.7	121	2.9	155	7.0	157	2.6	12	155	2.6	204.412	-S400	063-12	62
6.8	161	1.4	0.7	124	2.9	159	6.8	161	1.4	12	159	1.4	209.887	-S220	063-12	58
6.2	177	2.2	0.6	137	2.6	175	6.2	177	2.2	11	175	2.3	230.946	-S400	063-12	62
5.9	185	1.2	0.6	143	2.5	182	5.9	185	1.2	11	182	1.2	241.022	-S220	063-12	58
5.4	204	1.9	0.5	157	2.3	201	5.4	204	1.9	9.5	201	1.9	265.956	-S400	063-12	62
5.2	210	1.1	0.5	162	2.2	206	5.2	210	1.1	9.3	206	1.1	273.079	-S220	063-12	58
5.1	216	2.8	0.5	166	2.1	212	5.1	216	2.8	9.0	212	2.8	280.500	-S660	063-12	66
4.7	231	1.7	0.5	178	2.0	227	4.7	231	1.7	8.4	227	1.8	300.479	-S400	063-12	62
4.5	246	2.7	0.5	189	1.9	242	4.5	246	2.7	7.9	242	2.7	319.600	-S660	063-12	66
4.1	265	1.3	0.4	204	1.7	260	4.1	265	1.3	7.4	260	1.3	344.533	-S400	063-12	62
3.9	284	1.6	0.4	219	1.6	279	3.9	284	1.6	6.9	279	1.6	369.548	-S660	063-12	66
3.7	299	1.3	0.4	230	1.5	294	3.7	299	1.3	6.5	294	1.3	389.256	-S400	063-12	62
3.4	324	1.6	0.3	249	1.4	318	3.4	324	1.6	6.0	318	1.6	421.060	-S660	063-12	66



Selection tables, 4-pole motors

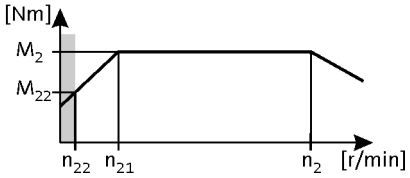

50 Hz: P_N = 0.18 kW
87 Hz: P_N = 0.33 kW

2-stage gearboxes

Mains operation 400 V, 50 Hz			Inverter operation 5 Hz -		- 20 Hz		- 50 Hz (1:10)			- 87 Hz (1:17.4)			i	Product		
n_2 [r/min]	M_2 [Nm]	c	n_{22} [r/min]	M_{22} [Nm]	n_{21} [r/min]	M_2 [Nm]	n_2 [r/min]	M_2 [Nm]	c	n_2 [r/min]	M_2 [Nm]	c		g500	MD□MA□□	
194	9.0	4.5	21	6.6	85	9.0	194	9.0	4.5	352	9.0	3.7	7.029	-S130	063-32	54
85	20	4.5	9.1	15	38	20	85	20	4.5	155	20	3.7	15.979	-S130	063-32	54
76	22	4.5	8.0	17	33	22	76	22	4.5	137	22	4.2	18.069	-S130	063-32	54
67	25	4.1	7.1	19	29	25	67	25	4.1	121	25	3.9	20.381	-S130	063-32	54
59	28	4.1	6.3	22	26	28	59	28	4.1	107	28	3.9	23.048	-S130	063-32	54
44	38	3.4	4.6	30	19	38	44	38	3.4	79	39	3.4	31.387	-S130	063-32	54
39	43	3.0	4.1	33	17	43	39	43	3.0	70	44	3.0	35.493	-S130	063-32	54
34	49	2.6	3.6	38	15	49	34	49	2.6	61	50	2.6	40.422	-S130	063-32	54
32	52	2.9	3.4	40	14	52	32	52	2.9	58	53	2.9	42.533	-S220	063-32	58
30	56	2.3	3.2	43	13	56	30	56	2.3	54	56	2.3	45.711	-S130	063-32	54
29	57	2.9	3.1	44	13	57	29	57	2.9	53	58	2.9	46.933	-S400	063-32	62
28	59	2.9	3.0	45	13	59	28	59	2.9	51	60	2.9	48.190	-S220	063-32	58
27	63	2.1	2.8	48	12	63	27	63	2.1	48	63	2.1	51.230	-S130	063-32	54
26	63	2.6	2.8	49	12	63	26	63	2.6	48	64	2.5	51.620	-S220	063-32	58
26	65	2.9	2.7	50	11	65	26	65	2.9	47	66	2.9	53.026	-S400	063-32	62
24	70	2.6	2.5	54	11	70	24	70	2.6	44	70	2.5	56.960	-S400	063-32	62
24	71	1.8	2.5	55	10	71	24	71	1.8	43	72	1.8	57.933	-S130	063-32	54
23	71	2.6	2.5	55	10	71	23	71	2.6	42	72	2.5	58.486	-S220	063-32	58
21	78	1.7	2.3	60	9.3	78	21	78	1.7	39	79	1.6	64.200	-S130	063-32	54
21	79	2.6	2.3	61	9.3	79	21	79	2.6	39	79	2.5	64.354	-S400	063-32	62
21	81	2.0	2.2	62	9.1	81	21	81	2.0	38	82	2.0	65.975	-S220	063-32	58
19	89	1.5	2.0	68	8.3	89	19	89	1.5	34	90	1.5	72.600	-S130	063-32	54
18	91	2.0	1.9	70	8.0	91	18	91	2.0	33	92	2.0	74.750	-S220	063-32	58

3-stage gearboxes

Mains operation 400 V, 50 Hz			Inverter operation 5 Hz -		- 20 Hz		- 50 Hz (1:10)			- 87 Hz (1:17.4)			i	Product		
n_2 [r/min]	M_2 [Nm]	c	n_{22} [r/min]	M_{22} [Nm]	n_{21} [r/min]	M_2 [Nm]	n_2 [r/min]	M_2 [Nm]	c	n_2 [r/min]	M_2 [Nm]	c		g500	MD□MA□□	
23	72	3.1	2.4	55	10	72	23	72	3.1	42	72	2.9	59.581	-S220	063-32	58
20	81	2.7	2.2	62	8.9	81	20	81	2.7	37	82	2.6	67.298	-S220	063-32	58
18	92	2.4	1.9	71	7.9	92	18	92	2.4	33	93	2.4	76.249	-S220	063-32	58
16	104	2.1	1.7	80	7.0	104	16	104	2.1	29	105	2.1	86.079	-S220	063-32	58
14	117	1.9	1.5	90	6.2	117	14	117	1.9	25	119	1.9	97.528	-S220	063-32	58
13	129	3.1	1.4	99	5.6	129	13	129	3.1	23	131	3.1	107.314	-S400	063-32	62
12	134	1.6	1.3	104	5.4	134	12	134	1.6	22	136	1.6	111.747	-S220	063-32	58
11	148	2.7	1.2	114	4.9	148	11	148	2.7	20	150	2.7	123.307	-S400	063-32	62
11	152	1.4	1.1	117	4.7	152	11	152	1.4	20	154	1.4	126.610	-S220	063-32	58
9.8	168	2.4	1.0	129	4.3	168	9.8	168	2.4	18	170	2.4	139.313	-S400	063-32	62
9.5	172	1.3	1.0	133	4.2	172	9.5	172	1.3	17	174	1.3	143.205	-S220	063-32	58
8.6	190	2.1	0.9	146	3.8	190	8.6	190	2.1	16	192	2.1	158.019	-S400	063-32	62



Selection tables, 4-pole motors

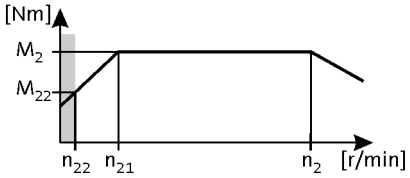

50 Hz: P_N = 0.18 kW
87 Hz: P_N = 0.33 kW

3-stage gearboxes

Mains operation 400 V, 50 Hz			Inverter operation 5 Hz -		- 20 Hz		- 50 Hz (1:10)			- 87 Hz (1:17.4)			i	Product		
n_2 [r/min]	M_2 [Nm]	c	n_{22} [r/min]	M_{22} [Nm]	n_{21} [r/min]	M_2 [Nm]	n_2 [r/min]	M_2 [Nm]	c	n_2 [r/min]	M_2 [Nm]	c		g500	MD□MA□□	
8.4	195	1.1	0.9	150	3.7	195	8.4	195	1.1	15	197	1.1	162.252	-S220	063-32	58
7.7	213	2.9	0.8	164	3.4	213	7.7	213	2.9	14	215	2.9	176.611	-S660	063-32	66
7.6	215	1.9	0.8	165	3.4	215	7.6	215	1.9	14	217	1.8	178.531	-S400	063-32	62
6.8	242	2.7	0.7	187	3.0	242	6.8	242	2.7	12	245	2.7	201.230	-S660	063-32	66
6.7	246	1.6	0.7	189	2.9	246	6.7	246	1.6	12	249	1.6	204.412	-S400	063-32	62
6.1	269	2.5	0.6	207	2.7	269	6.1	269	2.5	11	272	2.4	223.833	-S660	063-32	66
5.9	278	1.4	0.6	214	2.6	278	5.9	278	1.4	11	281	1.4	230.946	-S400	063-32	62
5.4	307	2.2	0.6	236	2.4	307	5.4	307	2.2	9.7	310	2.1	255.034	-S660	063-32	66
5.1	320	1.2	0.5	246	2.3	320	5.1	320	1.2	9.3	324	1.2	265.956	-S400	063-32	62
4.9	338	1.8	0.5	260	2.1	338	4.9	338	1.8	8.8	341	1.8	280.500	-S660	063-32	66
4.5	362	1.1	0.5	278	2.0	362	4.5	362	1.1	8.2	366	1.1	300.479	-S400	063-32	62
4.3	385	1.7	0.5	296	1.9	385	4.3	385	1.7	7.7	389	1.7	319.600	-S660	063-32	66
3.7	445	1.0	0.4	342	1.6	445	3.7	445	1.0				369.548	-S660	063-32	66
3.2	507	1.0	0.3	390	1.4	507	3.2	507	1.0	5.9	512	1.0	421.060	-S660	063-32	66



Selection tables, 4-pole motors

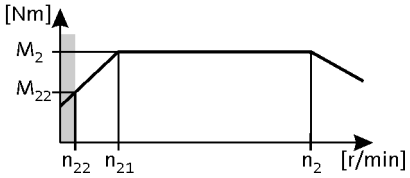

50 Hz: P_N = 0.25 kW
87 Hz: P_N = 0.45 kW

2-stage gearboxes

Mains operation 400 V, 50 Hz			Inverter operation 5 Hz -		- 20 Hz		- 50 Hz (1:10)			- 87 Hz (1:17.4)			i	Product		
n_2 [r/min]	M_2 [Nm]	c	n_{22} [r/min]	M_{22} [Nm]	n_{21} [r/min]	M_2 [Nm]	n_2 [r/min]	M_2 [Nm]	c	n_2 [r/min]	M_2 [Nm]	c		g500	MD□MA□□	
374	6.0	5.6	40	4.8	164	6.0	374	6.0	5.6	677	6.0	4.8	3.661	-S130	063-42	54
273	8.0	5.6	29	6.5	120	8.0	273	8.0	5.6	494	8.0	4.8	5.021	-S130	063-42	54
213	11	5.2	23	8.4	93	11	213	11	5.2	386	11	4.4	6.425	-S130	063-42	54
195	12	5.2	21	9.2	85	12	195	12	5.2	353	12	4.4	7.029	-S130	063-42	54
165	14	5.6	17	11	72	14	165	14	5.6	298	14	4.8	8.322	-S130	063-42	54
146	16	5.6	15	12	64	16	146	16	5.6	264	16	4.8	9.411	-S130	063-42	54
120	19	5.6	13	15	53	19	120	19	5.6	217	19	4.8	11.413	-S130	063-42	54
106	22	5.6	11	17	47	22	106	22	5.6	192	22	4.8	12.907	-S130	063-42	54
94	25	5.2	9.9	19	41	25	94	25	5.2	170	25	4.4	14.606	-S130	063-42	54
86	27	4.8	9.1	21	38	27	86	27	4.8	155	27	4.1	15.979	-S130	063-42	54
76	31	4.3	8.0	24	33	30	76	31	4.3	137	30	4.1	18.069	-S130	063-42	54
67	34	3.8	7.1	27	29	34	67	34	3.8	122	34	3.7	20.381	-S130	063-42	54
59	39	3.3	6.3	30	26	39	59	39	3.3	108	39	3.2	23.048	-S130	063-42	54
55	42	3.1	5.8	33	24	42	55	42	3.1	99	42	3.0	24.967	-S130	063-42	54
49	48	2.7	5.1	37	21	47	49	48	2.7	88	47	2.6	28.233	-S130	063-42	54
44	53	2.5	4.6	41	19	53	44	53	2.5	79	53	2.5	31.387	-S130	063-42	54
39	60	2.2	4.1	46	17	60	39	60	2.2	70	60	2.2	35.493	-S130	063-42	54
34	68	1.9	3.6	53	15	68	34	68	1.9	61	68	1.9	40.422	-S130	063-42	54
32	72	3.1	3.4	55	14	72	32	72	3.1	58	72	3.1	42.533	-S220	063-42	58
30	77	1.7	3.2	60	13	77	30	77	1.7	54	77	1.7	45.711	-S130	063-42	54
28	81	2.7	3.0	63	13	81	28	81	2.7	52	81	2.7	48.190	-S220	063-42	58
28	83	3.2	3.0	64	12	82	28	83	3.2	51	82	3.2	48.950	-S660	063-42	66
27	87	1.5	2.8	67	12	86	27	87	1.5	48	86	1.5	51.230	-S130	063-42	54
27	87	2.5	2.8	67	12	87	27	87	2.5	48	87	2.5	51.620	-S220	063-42	58
25	94	3.2	2.6	73	11	94	25	94	3.2	45	94	3.2	55.773	-S660	063-42	66
24	96	2.8	2.5	74	11	96	24	96	2.8	44	96	2.8	56.960	-S400	063-42	62
24	98	1.3	2.5	75	10	97	24	98	1.3	43	97	1.3	57.933	-S130	063-42	54
23	99	2.2	2.5	76	10	98	23	99	2.2	42	98	2.2	58.486	-S220	063-42	58
21	109	1.2	2.3	84	9.3	108	21	109	1.2	39	108	1.2	64.200	-S130	063-42	54
21	109	2.8	2.3	84	9.3	108	21	109	2.8	39	108	2.8	64.354	-S400	063-42	62
21	112	1.4	2.2	86	9.1	111	21	112	1.4	38	111	1.4	65.975	-S220	063-42	58
19	123	1.1	2.0	95	8.3	122	19	123	1.1	34	122	1.1	72.600	-S130	063-42	54
18	126	1.4	1.9	97	8.0	126	18	126	1.4	33	126	1.4	74.750	-S220	063-42	58

3-stage gearboxes

Mains operation 400 V, 50 Hz			Inverter operation 5 Hz -		- 20 Hz		- 50 Hz (1:10)			- 87 Hz (1:17.4)			i	Product		
n_2 [r/min]	M_2 [Nm]	c	n_{22} [r/min]	M_{22} [Nm]	n_{21} [r/min]	M_2 [Nm]	n_2 [r/min]	M_2 [Nm]	c	n_2 [r/min]	M_2 [Nm]	c		g500	MD□MA□□	
30	75	2.9	3.2	58	13	75	30	75	2.9	55	75	2.5	45.333	-S220	063-42	58
26	88	2.5	2.8	67	11	87	26	88	2.5	47	87	2.4	52.587	-S220	063-42	58



Selection tables, 4-pole motors

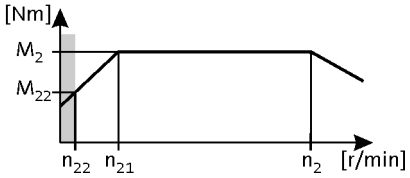

50 Hz: P_N = 0.25 kW
87 Hz: P_N = 0.45 kW

3-stage gearboxes

Mains operation 400 V, 50 Hz			Inverter operation 5 Hz -		- 20 Hz		- 50 Hz (1:10)			- 87 Hz (1:17.4)			i	Product		
n_2 [r/min]	M_2 [Nm]	c	n_{22} [r/min]	M_{22} [Nm]	n_{21} [r/min]	M_2 [Nm]	n_2 [r/min]	M_2 [Nm]	c	n_2 [r/min]	M_2 [Nm]	c		g500	MD□MA□□	
23	99	2.2	2.4	76	10	99	23	99	2.2	42	99	2.1	59.581	-S220	063-42	58
20	112	2.0	2.2	86	8.9	111	20	112	2.0	37	111	1.9	67.298	-S220	063-42	58
18	124	3.2	2.0	95	8.1	123	18	124	3.2	33	123	3.3	74.260	-S400	063-42	62
18	127	1.7	1.9	98	7.9	126	18	127	1.7	33	126	1.7	76.249	-S220	063-42	58
16	140	2.9	1.7	108	7.2	139	16	140	2.9	30	139	2.9	83.900	-S400	063-42	62
16	143	1.5	1.7	110	7.0	143	16	143	1.5	29	143	1.5	86.079	-S220	063-42	58
14	158	2.5	1.5	122	6.3	157	14	158	2.5	26	157	2.5	94.984	-S400	063-42	62
14	162	1.4	1.5	125	6.2	161	14	162	1.4	25	161	1.4	97.528	-S220	063-42	58
13	179	2.2	1.4	138	5.6	178	13	179	2.2	23	178	2.3	107.314	-S400	063-42	62
12	186	1.2	1.3	143	5.4	185	12	186	1.2	22	185	1.2	111.747	-S220	063-42	58
11	205	2.0	1.2	158	4.9	204	11	205	2.0	20	204	2.0	123.307	-S400	063-42	62
11	207	3.2	1.2	159	4.8	206	11	207	3.2	20	206	3.2	124.289	-S660	063-42	66
11	211	1.0	1.1	162	4.7	210	11	211	1.0	20	210	1.1	126.610	-S220	063-42	58
10	228	2.9	1.1	176	4.4	227	10	228	2.9	18	227	2.9	137.133	-S660	063-42	66
9.8	232	1.7	1.0	179	4.3	231	9.8	232	1.7	18	231	1.7	139.313	-S400	063-42	62
8.8	260	2.5	0.9	200	3.8	259	8.8	260	2.5	16	259	2.6	156.249	-S660	063-42	66
8.7	263	1.5	0.9	203	3.8	262	8.7	263	1.5	16	262	1.5	158.019	-S400	063-42	62
7.8	294	2.2	0.8	227	3.4	292	7.8	294	2.2	14	292	2.3	176.611	-S660	063-42	66
7.7	297	1.3	0.8	229	3.4	296	7.7	297	1.3	14	296	1.4	178.531	-S400	063-42	62
6.8	335	2.0	0.7	258	3.0	333	6.8	335	2.0	12	333	2.0	201.230	-S660	063-42	66
6.7	340	1.2	0.7	262	2.9	338	6.7	340	1.2	12	338	1.2	204.412	-S400	063-42	62
6.1	373	1.8	0.6	287	2.7	371	6.1	373	1.8	11	371	1.8	223.833	-S660	063-42	66
5.9	385	1.0	0.6	296	2.6	382	5.9	385	1.0	11	382	1.0	230.946	-S400	063-42	62
5.4	425	1.6	0.6	327	2.4	422	5.4	425	1.6	9.7	422	1.6	255.034	-S660	063-42	66
4.9	467	1.2	0.5	360	2.1	464	4.9	467	1.2	8.8	464	1.2	280.500	-S660	063-42	66
4.3	532	1.2	0.5	410	1.9	529	4.3	532	1.2	7.8	529	1.2	319.600	-S660	063-42	66



Selection tables, 4-pole motors

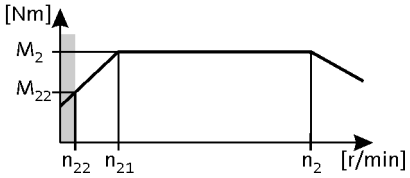

50 Hz: P_N = 0.37 kW
87 Hz: P_N = 0.66 kW

2-stage gearboxes

Mains operation 400 V, 50 Hz			Inverter operation 5 Hz -		- 20 Hz		- 50 Hz (1:10)			- 87 Hz (1:17.4)			i	Product		
n_2 [r/min]	M_2 [Nm]	c	n_{22} [r/min]	M_{22} [Nm]	n_{21} [r/min]	M_2 [Nm]	n_2 [r/min]	M_2 [Nm]	c	n_2 [r/min]	M_2 [Nm]	c		g500	MD□MA□□	
385	9.0	4.9	40	6.9	164	9.0	385	9.0	4.9				3.661	-S130	071-32	54
281	12	4.9	29	9.4	120	12	281	12	4.9				5.021	-S130	071-32	54
219	16	4.5	23	12	93	16	219	16	4.5				6.425	-S130	071-32	54
201	17	4.5	21	13	85	17	201	17	4.5				7.029	-S130	071-32	54
169	20	4.9	17	16	72	20	169	20	4.9				8.322	-S130	071-32	54
150	23	4.9	15	18	64	23	150	23	4.9				9.411	-S130	071-32	54
124	28	4.7	13	21	53	28	124	28	4.7				11.413	-S130	071-32	54
109	31	4.1	11	24	47	31	109	31	4.1				12.907	-S130	071-32	54
97	36	3.7	9.9	27	41	36	97	36	3.7				14.606	-S130	071-32	54
88	39	3.4	9.1	30	38	39	88	39	3.4				15.979	-S130	071-32	54
78	44	3.0	8.0	34	33	44	78	44	3.0	140	44	2.8	18.069	-S130	071-32	54
69	50	2.6	7.1	38	29	49	69	50	2.6	124	49	2.5	20.381	-S130	071-32	54
61	56	2.3	6.3	43	26	56	61	56	2.3	109	56	2.2	23.048	-S130	071-32	54
57	61	2.1	5.8	47	24	61	57	61	2.1	101	61	2.1	24.967	-S130	071-32	54
50	69	1.9	5.1	53	21	69	50	69	1.9	89	69	1.8	28.233	-S130	071-32	54
47	73	3.0	4.8	56	20	73	47	73	3.0	84	73	2.9	29.937	-S220	071-32	58
45	76	1.7	4.6	59	19	76	45	76	1.7	80	76	1.7	31.387	-S130	071-32	54
43	80	2.8	4.4	62	18	80	43	80	2.8	77	80	2.8	32.867	-S220	071-32	58
40	86	1.5	4.1	66	17	86	40	86	1.5	71	86	1.5	35.493	-S130	071-32	54
39	88	3.2	4.0	68	17	88	39	88	3.2				36.267	-S400	071-32	62
38	91	2.4	3.9	70	16	90	38	91	2.4	68	90	2.4	37.238	-S220	071-32	58
35	98	3.2	3.6	76	15	98	35	98	3.2				40.333	-S660	071-32	66
35	98	1.3	3.6	76	15	98	35	98	1.3	62	98	1.3	40.422	-S130	071-32	54
34	100	3.2	3.5	77	15	100	34	100	3.2				40.974	-S400	071-32	62
33	103	2.1	3.4	80	14	103	33	103	2.1	59	103	2.1	42.533	-S220	071-32	58
31	111	1.2	3.2	86	13	111	31	111	1.2	55	111	1.2	45.711	-S130	071-32	54
31	112	3.2	3.2	86	13	112	31	112	3.2				45.956	-S660	071-32	66
30	114	2.8	3.1	88	13	114	30	114	2.8	54	114	2.8	46.933	-S400	071-32	62
29	117	1.9	3.0	90	13	117	29	117	1.9	52	117	1.9	48.190	-S220	071-32	58
29	119	2.8	3.0	92	12	119	29	119	2.8	52	119	2.8	48.950	-S660	071-32	66
28	125	1.0	2.8	96	12	124	28	125	1.0	49	124	1.1	51.230	-S130	071-32	54
27	126	1.8	2.8	97	12	125	27	126	1.8	49	125	1.8	51.620	-S220	071-32	58
27	129	2.7	2.7	99	11	129	27	129	2.7	48	129	2.7	53.026	-S400	071-32	62
25	136	2.8	2.6	104	11	135	25	136	2.8	45	135	2.8	55.773	-S660	071-32	66
25	138	1.9	2.5	107	11	138	25	138	1.9	44	138	1.9	56.960	-S400	071-32	62



Selection tables, 4-pole motors

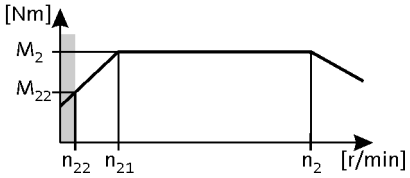

50 Hz: P_N = 0.37 kW
87 Hz: P_N = 0.66 kW

2-stage gearboxes

Mains operation 400 V, 50 Hz			Inverter operation 5 Hz -		- 20 Hz		- 50 Hz (1:10)			- 87 Hz (1:17.4)			i	Product g500	MD□MA□□	
n_2 [r/min]	M_2 [Nm]	c	n_{22} [r/min]	M_{22} [Nm]	n_{21} [r/min]	M_2 [Nm]	n_2 [r/min]	M_2 [Nm]	c	n_2 [r/min]	M_2 [Nm]	c				
24	142	1.6	2.5	110	10	142	24	142	1.6	43	142	1.6	58.486	-S220	071-32	58
22	156	1.9	2.3	121	9.3	156	22	156	1.9	39	156	1.9	64.354	-S400	071-32	62
21	160	1.1	2.2	124	9.1	160	21	160	1.1	38	160	1.1	65.975	-S220	071-32	58
19	182	1.1	1.9	140	8.0	181	19	182	1.1	34	181	1.1	74.750	-S220	071-32	58

3-stage gearboxes

Mains operation 400 V, 50 Hz			Inverter operation 5 Hz -		- 20 Hz		- 50 Hz (1:10)			- 87 Hz (1:17.4)			i	Product g500	MD□MA□□	
n_2 [r/min]	M_2 [Nm]	c	n_{22} [r/min]	M_{22} [Nm]	n_{21} [r/min]	M_2 [Nm]	n_2 [r/min]	M_2 [Nm]	c	n_2 [r/min]	M_2 [Nm]	c				
35	96	2.3	3.6	74	15	96	35	96	2.3	63	96	1.9	40.012	-S220	071-32	58
31	109	2.0	3.2	84	13	108	31	109	2.0	56	108	1.7	45.333	-S220	071-32	58
27	126	1.8	2.8	97	11	126	27	126	1.8	48	126	1.7	52.587	-S220	071-32	58
24	139	2.9	2.5	107	10	139	24	139	2.9	43	139	2.8	58.027	-S400	071-32	62
24	143	1.5	2.4	110	10	142	24	143	1.5	42	142	1.5	59.581	-S220	071-32	58
22	157	2.6	2.2	121	9.2	157	22	157	2.6	38	157	2.4	65.559	-S400	071-32	62
21	161	1.4	2.2	124	8.9	161	21	161	1.4	37	161	1.3	67.298	-S220	071-32	58
19	178	2.3	2.0	137	8.1	177	19	178	2.3	34	177	2.3	74.260	-S400	071-32	62
19	183	1.2	1.9	141	7.9	182	19	183	1.2	33	182	1.2	76.249	-S220	071-32	58
17	201	2.0	1.7	155	7.2	201	17	201	2.0	30	201	2.0	83.900	-S400	071-32	62
16	206	1.1	1.7	159	7.0	206	16	206	1.1	29	206	1.1	86.079	-S220	071-32	58
16	213	3.1	1.6	164	6.7	213	16	213	3.1	28	213	3.1	89.048	-S660	071-32	66
15	227	1.8	1.5	175	6.3	227	15	227	1.8	27	227	1.8	94.984	-S400	071-32	62
14	243	2.7	1.4	187	5.9	243	14	243	2.7	25	243	2.7	101.460	-S660	071-32	66
13	257	1.6	1.4	198	5.6	256	13	257	1.6	24	256	1.6	107.314	-S400	071-32	62
13	261	2.5	1.3	201	5.5	261	13	261	2.5	23	261	2.5	109.083	-S660	071-32	66
11	295	1.4	1.2	227	4.9	295	11	295	1.4	20	295	1.4	123.307	-S400	071-32	62
11	298	2.2	1.2	229	4.8	297	11	298	2.2	20	297	2.2	124.289	-S660	071-32	66
10	328	2.0	1.1	253	4.4	328	10	328	2.0	18	328	2.0	137.133	-S660	071-32	66
10	334	1.2	1.0	257	4.3	333	10	334	1.2	18	333	1.2	139.313	-S400	071-32	62
9.0	374	1.8	0.9	288	3.8	373	9.0	374	1.8	16	373	1.8	156.249	-S660	071-32	66
8.9	378	1.1	0.9	291	3.8	378	8.9	378	1.1	16	378	1.1	158.019	-S400	071-32	62
8.0	423	1.6	0.8	326	3.4	422	8.0	423	1.6	14	422	1.6	176.611	-S660	071-32	66
7.0	482	1.4	0.7	371	3.0	481	7.0	482	1.4	13	481	1.4	201.230	-S660	071-32	66
6.3	536	1.2	0.6	413	2.7	535	6.3	536	1.2	11	535	1.2	223.833	-S660	071-32	66
5.5	611	1.1	0.6	470	2.4	610	5.5	611	1.1	9.9	610	1.1	255.034	-S660	071-32	66



Selection tables, 4-pole motors

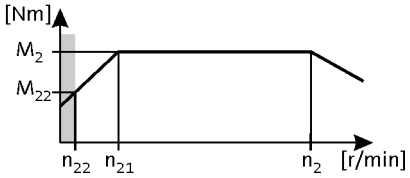

50 Hz: P_N = 0.55 kW
87 Hz: P_N = 1.0 kW

2-stage gearboxes

Mains operation 400 V, 50 Hz			Inverter operation 5 Hz -		- 20 Hz		- 50 Hz (1:10)			- 87 Hz (1:17.4)			i	Product		
n_2 [r/min]	M_2 [Nm]	c	n_{22} [r/min]	M_{22} [Nm]	n_{21} [r/min]	M_2 [Nm]	n_2 [r/min]	M_2 [Nm]	c	n_2 [r/min]	M_2 [Nm]	c		g500	MD□MA□□	
384	13	4.5	40	10	164	13	384	13	4.5				3.661	-S130	071-42	54
280	18	4.2	29	14	120	18	280	18	4.2				5.021	-S130	071-42	54
240	21	4.5	25	16	102	21	240	21	4.5				5.860	-S400	071-42	62
219	23	3.7	23	18	93	23	219	23	3.7				6.425	-S130	071-42	54
200	25	3.6	21	20	85	25	200	25	3.6				7.029	-S130	071-42	54
169	30	3.8	17	23	72	30	169	30	3.8				8.322	-S130	071-42	54
149	34	3.7	15	26	64	34	149	34	3.7				9.411	-S130	071-42	54
123	41	3.1	13	32	53	41	123	41	3.1	220	42	2.6	11.413	-S130	071-42	54
109	47	2.8	11	36	47	47	109	47	2.8	195	48	2.3	12.907	-S130	071-42	54
96	53	2.5	9.9	41	41	53	96	53	2.5	172	54	2.0	14.606	-S130	071-42	54
95	54	4.5	9.8	41	41	54	95	54	4.5				14.806	-S400	071-42	62
88	58	2.2	9.1	45	38	58	88	58	2.2	157	59	1.9	15.979	-S130	071-42	54
78	66	2.0	8.0	51	33	66	78	66	2.0	139	67	1.9	18.069	-S130	071-42	54
75	68	3.2	7.7	52	32	68	75	68	3.2	134	69	3.0	18.776	-S220	071-42	58
69	74	3.0	7.1	57	30	74	69	74	3.0	124	75	2.8	20.300	-S220	071-42	58
69	74	1.8	7.1	57	29	74	69	74	1.8	123	75	1.7	20.381	-S130	071-42	54
61	83	2.6	6.3	64	26	83	61	83	2.6	109	85	2.5	23.000	-S220	071-42	58
61	84	1.6	6.3	64	26	84	61	84	1.6	109	85	1.5	23.048	-S130	071-42	54
56	91	1.4	5.8	70	24	91	56	91	1.4	101	92	1.4	24.967	-S130	071-42	54
53	96	2.3	5.5	74	23	96	53	96	2.3	95	97	2.2	26.422	-S220	071-42	58
50	102	1.3	5.1	79	21	102	50	102	1.3	89	104	1.2	28.233	-S130	071-42	54
47	109	2.0	4.8	84	20	109	47	109	2.0	84	110	1.9	29.937	-S220	071-42	58
45	113	3.2	4.7	87	19	113	45	113	3.2	81	115	3.1	31.167	-S660	071-42	66
45	114	1.1	4.6	88	19	114	45	114	1.1	80	116	1.1	31.387	-S130	071-42	54
43	119	1.9	4.4	92	18	119	43	119	1.9	77	121	1.8	32.867	-S220	071-42	58
40	129	1.0	4.1	99	17	129	40	129	1.0				35.493	-S130	071-42	54
40	129	3.2	4.1	99	17	129	40	129	3.2	71	131	3.1	35.511	-S660	071-42	66
39	132	2.9	4.0	101	17	132	39	132	2.9	69	134	2.8	36.267	-S400	071-42	62
38	135	1.6	3.9	104	16	135	38	135	1.6	68	137	1.6	37.238	-S220	071-42	58
35	146	2.9	3.6	113	15	146	35	146	2.9	62	149	2.8	40.333	-S660	071-42	66
34	149	2.7	3.5	114	15	149	34	149	2.7	61	151	2.7	40.974	-S400	071-42	62
33	154	1.4	3.4	119	14	154	33	154	1.4	59	157	1.4	42.533	-S220	071-42	58
31	167	2.9	3.2	128	13	167	31	167	2.9	55	169	2.8	45.956	-S660	071-42	66
30	170	1.9	3.1	131	13	170	30	170	1.9	54	173	1.8	46.933	-S400	071-42	62
29	175	1.3	3.0	135	13	175	29	175	1.3	52	178	1.2	48.190	-S220	071-42	58



Selection tables, 4-pole motors

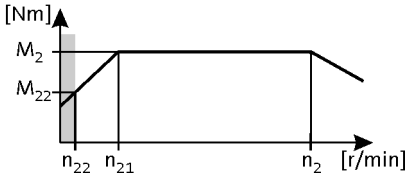

50 Hz: P_N = 0.55 kW
87 Hz: P_N = 1.0 kW

2-stage gearboxes

Mains operation 400 V, 50 Hz			Inverter operation 5 Hz -		- 20 Hz		- 50 Hz (1:10)			- 87 Hz (1:17.4)			i	Product		
n_2 [r/min]	M_2 [Nm]	c	n_{22} [r/min]	M_{22} [Nm]	n_{21} [r/min]	M_2 [Nm]	n_2 [r/min]	M_2 [Nm]	c	n_2 [r/min]	M_2 [Nm]	c		g500	MD□MA□□	
29	178	2.4	3.0	137	12	178	29	178	2.4	51	180	2.4	48.950	-S660	071-42	66
27	187	1.2	2.8	144	12	187	27	187	1.2	49	190	1.2	51.620	-S220	071-42	58
27	192	1.8	2.7	148	11	192	27	192	1.8	47	195	1.8	53.026	-S400	071-42	62
25	202	2.4	2.6	156	11	202	25	202	2.4	45	205	2.4	55.773	-S660	071-42	66
25	207	1.3	2.5	159	11	207	25	207	1.3	44	210	1.3	56.960	-S400	071-42	62
24	212	1.0	2.5	163	10	212	24	212	1.0	43	215	1.0	58.486	-S220	071-42	58
22	233	1.3	2.3	180	9.3	233	22	233	1.3	39	237	1.3	64.354	-S400	071-42	62

3-stage gearboxes

Mains operation 400 V, 50 Hz			Inverter operation 5 Hz -		- 20 Hz		- 50 Hz (1:10)			- 87 Hz (1:17.4)			i	Product		
n_2 [r/min]	M_2 [Nm]	c	n_{22} [r/min]	M_{22} [Nm]	n_{21} [r/min]	M_2 [Nm]	n_2 [r/min]	M_2 [Nm]	c	n_2 [r/min]	M_2 [Nm]	c		g500	MD□MA□□	
25	203	3.2	2.6	156	11	203	25	203	3.2	44	206	3.0	56.818	-S660	071-42	66
24	207	1.9	2.5	160	10	207	24	207	1.9	43	211	1.8	58.027	-S400	071-42	62
22	228	2.9	2.3	176	9.4	228	22	228	2.9	39	232	2.7	63.817	-S660	071-42	66
21	234	1.7	2.2	180	9.2	234	21	234	1.7	38	238	1.6	65.559	-S400	071-42	62
20	249	2.7	2.1	192	8.6	249	20	249	2.7	36	253	2.5	69.813	-S660	071-42	66
19	260	2.5	2.0	200	8.3	260	19	260	2.5	35	264	2.5	72.713	-S660	071-42	66
19	265	1.5	2.0	204	8.1	265	19	265	1.5	34	269	1.5	74.260	-S400	071-42	62
18	284	2.3	1.8	219	7.5	284	18	284	2.3	32	289	2.3	79.545	-S660	071-42	66
17	300	1.3	1.7	231	7.2	300	17	300	1.3	30	304	1.3	83.900	-S400	071-42	62
16	318	2.1	1.6	245	6.7	318	16	318	2.1	28	323	2.0	89.048	-S660	071-42	66
15	339	1.2	1.5	261	6.3	339	15	339	1.2	27	345	1.2	94.984	-S400	071-42	62
14	362	1.8	1.4	279	5.9	362	14	362	1.8	25	368	1.8	101.460	-S660	071-42	66
13	383	1.0	1.4	295	5.6	383	13	383	1.0	23	389	1.0	107.314	-S400	071-42	62
13	390	1.7	1.3	300	5.5	390	13	390	1.7	23	396	1.7	109.083	-S660	071-42	66
11	444	1.5	1.2	342	4.8	444	11	444	1.5	20	451	1.5	124.289	-S660	071-42	66
10	490	1.4	1.1	377	4.4	490	10	490	1.4	18	498	1.3	137.133	-S660	071-42	66
9.0	558	1.2	0.9	430	3.8	558	9.0	558	1.2	16	567	1.2	156.249	-S660	071-42	66
8.0	631	1.1	0.8	486	3.4	631	8.0	631	1.1	14	641	1.0	176.611	-S660	071-42	66



Selection tables, 4-pole motors

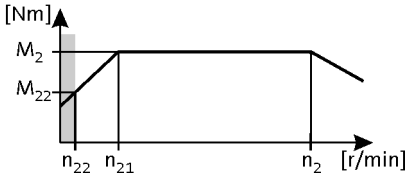

50 Hz: P_N = 0.75 kW
87 Hz: P_N = 1.35 kW

2-stage gearboxes

Mains operation 400 V, 50 Hz			Inverter operation 5 Hz -		- 20 Hz		- 50 Hz (1:10)			- 87 Hz (1:17.4)			i	Product		
n_2 [r/min]	M_2 [Nm]	c	n_{22} [r/min]	M_{22} [Nm]	n_{21} [r/min]	M_2 [Nm]	n_2 [r/min]	M_2 [Nm]	c	n_2 [r/min]	M_2 [Nm]	c		g500	MH□MA□□	
385	18	3.5	40	14	164	18	385	18	3.5				3.661	-S130	080-32	54
281	25	3.1	29	19	120	25	281	25	3.1	502	25	2.6	5.021	-S130	080-32	54
241	29	4.1	25	22	102	29	241	29	4.1	430	29	3.5	5.860	-S400	080-32	62
219	32	2.8	23	24	93	32	219	32	2.8	392	32	2.3	6.425	-S130	080-32	54
201	35	2.7	21	27	85	35	201	35	2.7	359	35	2.2	7.029	-S130	080-32	54
169	41	2.8	17	32	72	41	169	41	2.8	303	41	2.4	8.322	-S130	080-32	54
150	46	2.7	15	36	64	46	150	46	2.7	268	47	2.3	9.411	-S130	080-32	54
124	56	2.3	13	43	53	56	124	56	2.3	221	57	1.9	11.413	-S130	080-32	54
109	64	2.0	11	49	47	64	109	64	2.0	195	64	1.7	12.907	-S130	080-32	54
97	72	1.8	9.9	55	41	72	97	72	1.8	173	72	1.5	14.606	-S130	080-32	54
96	73	3.0	9.9	56	41	73	96	73	3.0	171	73	2.5	14.720	-S220	080-32	58
95	73	4.1	9.8	56	41	73	95	73	4.1				14.806	-S400	080-32	62
88	79	1.7	9.1	61	38	79	88	79	1.7	158	79	1.4	15.979	-S130	080-32	54
85	82	2.7	8.8	63	36	82	85	82	2.7	152	82	2.3	16.571	-S220	080-32	58
78	89	1.5	8.0	69	33	89	78	89	1.5	140	90	1.4	18.069	-S130	080-32	54
75	93	2.4	7.7	71	32	93	75	93	2.4	134	93	2.3	18.776	-S220	080-32	58
70	100	2.2	7.1	77	30	100	70	100	2.2	124	101	2.1	20.300	-S220	080-32	58
69	100	1.3	7.1	77	29	100	69	100	1.3	124	101	1.2	20.381	-S130	080-32	54
61	113	1.9	6.3	87	26	113	61	113	1.9	110	114	1.8	23.000	-S220	080-32	58
61	114	1.1	6.3	87	26	114	61	114	1.1	109	114	1.1	23.048	-S130	080-32	54
57	123	1.1	5.8	95	24	123	57	123	1.1	101	124	1.0	24.967	-S130	080-32	54
56	125	3.2	5.7	96	24	125	56	125	3.2	100	126	3.0	25.308	-S400	080-32	62
53	130	1.7	5.5	100	23	130	53	130	1.7	95	131	1.6	26.422	-S220	080-32	58
48	144	2.8	5.0	111	21	144	48	144	2.8	86	145	2.6	29.156	-S400	080-32	62
47	148	1.5	4.8	114	20	148	47	148	1.5	84	149	1.4	29.937	-S220	080-32	58
45	154	2.9	4.7	118	19	154	45	154	2.9				31.167	-S660	080-32	66
43	162	1.4	4.4	125	18	162	43	162	1.4	77	163	1.4	32.867	-S220	080-32	58
43	162	2.5	4.4	125	18	162	43	162	2.5	77	163	2.5	32.940	-S400	080-32	62
40	175	2.9	4.1	135	17	175	40	175	2.9				35.511	-S660	080-32	66
39	179	2.2	4.0	138	17	179	39	179	2.2	70	180	2.2	36.267	-S400	080-32	62
38	184	1.2	3.9	141	16	184	38	184	1.2	68	185	1.2	37.238	-S220	080-32	58
35	199	2.6	3.6	153	15	199	35	199	2.6	63	200	2.6	40.333	-S660	080-32	66
34	202	2.0	3.5	155	15	202	34	202	2.0	62	203	2.0	40.974	-S400	080-32	62
33	210	1.1	3.4	161	14	210	33	210	1.1	59	211	1.0	42.533	-S220	080-32	58
31	226	2.6	3.2	174	13	226	31	226	2.6	55	228	2.6	45.956	-S660	080-32	66



Selection tables, 4-pole motors

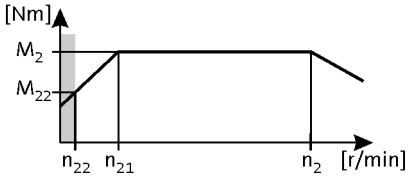

50 Hz: P_N = 0.75 kW
87 Hz: P_N = 1.35 kW

2-stage gearboxes

Mains operation 400 V, 50 Hz			Inverter operation 5 Hz -		- 20 Hz		- 50 Hz (1:10)			- 87 Hz (1:17.4)			i	Product g500	MH□MA□□	
n_2 [r/min]	M_2 [Nm]	c	n_{22} [r/min]	M_{22} [Nm]	n_{21} [r/min]	M_2 [Nm]	n_2 [r/min]	M_2 [Nm]	c	n_2 [r/min]	M_2 [Nm]	c				
30	231	1.4	3.1	178	13	231	30	231	1.4	54	233	1.4	46.933	-S400	080-32	62
29	241	1.9	3.0	186	12	241	29	241	1.9	52	243	1.8	48.950	-S660	080-32	66
27	261	1.3	2.7	201	11	261	27	261	1.3	48	263	1.3	53.026	-S400	080-32	62
25	275	1.9	2.6	212	11	275	25	275	1.9	45	277	1.8	55.773	-S660	080-32	66

3-stage gearboxes

Mains operation 400 V, 50 Hz			Inverter operation 5 Hz -		- 20 Hz		- 50 Hz (1:10)			- 87 Hz (1:17.4)			i	Product g500	MH□MA□□	
n_2 [r/min]	M_2 [Nm]	c	n_{22} [r/min]	M_{22} [Nm]	n_{21} [r/min]	M_2 [Nm]	n_2 [r/min]	M_2 [Nm]	c	n_2 [r/min]	M_2 [Nm]	c				
28	242	2.6	2.9	186	12	242	28	242	2.6	51	244	2.5	49.867	-S660	080-32	66
25	276	2.4	2.6	212	11	276	25	276	2.4	44	278	2.2	56.818	-S660	080-32	66
24	282	1.4	2.5	217	10	282	24	282	1.4	43	284	1.4	58.027	-S400	080-32	62
22	310	2.1	2.3	239	9.4	310	22	310	2.1	40	312	2.0	63.817	-S660	080-32	66
22	318	1.3	2.2	245	9.2	318	22	318	1.3	38	321	1.2	65.559	-S400	080-32	62
20	339	2.0	2.1	261	8.6	339	20	339	2.0	36	341	1.9	69.813	-S660	080-32	66
19	353	1.9	2.0	272	8.3	353	19	353	1.9	35	355	1.9	72.713	-S660	080-32	66
19	360	1.1	2.0	278	8.1	360	19	360	1.1	34	363	1.1	74.260	-S400	080-32	62
18	386	1.7	1.8	297	7.5	386	18	386	1.7	32	389	1.7	79.545	-S660	080-32	66
16	432	1.5	1.6	333	6.7	432	16	432	1.5	28	435	1.5	89.048	-S660	080-32	66
14	493	1.3	1.4	379	5.9	493	14	493	1.3	25	496	1.3	101.460	-S660	080-32	66
13	530	1.3	1.3	408	5.5	530	13	530	1.3	23	533	1.2	109.083	-S660	080-32	66
11	603	1.1	1.2	464	4.8	603	11	603	1.1	20	608	1.1	124.289	-S660	080-32	66



Selection tables, 4-pole motors

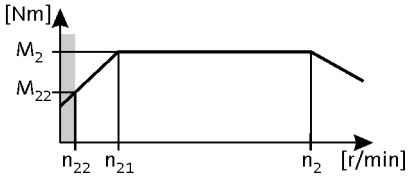

50 Hz: P_N = 1.1 kW
87 Hz: P_N = 2.0 kW

2-stage gearboxes

Mains operation 400 V, 50 Hz			Inverter operation 5 Hz -		- 20 Hz		- 50 Hz (1:10)			- 87 Hz (1:17.4)			i	Product		
n_2 [r/min]	M_2 [Nm]	c	n_{22} [r/min]	M_{22} [Nm]	n_{21} [r/min]	M_2 [Nm]	n_2 [r/min]	M_2 [Nm]	c	n_2 [r/min]	M_2 [Nm]	c		g500	MH□MA□□	
391	26	2.4	40	18	164	26	391	26	2.4	694	27	2.0	3.661	-S130	090-12	54
312	33	5.8	32	23	131	33	312	33	5.8				4.579	-S400	090-12	62
285	36	2.1	29	25	120	36	285	36	2.1	506	37	1.7	5.021	-S130	090-12	54
244	42	5.4	25	29	102	42	244	42	5.4				5.860	-S400	090-12	62
223	46	1.9	23	32	93	46	223	46	1.9	395	47	1.6	6.425	-S130	090-12	54
203	50	1.8	21	35	85	50	203	50	1.8	361	51	1.5	7.029	-S130	090-12	54
172	59	2.0	17	42	72	59	172	59	2.0	305	61	1.6	8.322	-S130	090-12	54
152	67	1.9	15	47	64	67	152	67	1.9	270	69	1.5	9.411	-S130	090-12	54
136	75	2.9	14	53	57	75	136	75	2.9	242	77	2.4	10.514	-S220	090-12	58
125	81	1.6	13	57	53	81	125	81	1.6	223	83	1.3	11.413	-S130	090-12	54
120	85	2.6	12	59	51	85	120	85	2.6	214	87	2.1	11.876	-S220	090-12	58
111	92	1.4	11	64	47	92	111	92	1.4	197	94	1.2	12.907	-S130	090-12	54
110	93	2.4	11	65	46	93	110	93	2.4	196	95	2.0	12.992	-S220	090-12	58
106	96	2.3	11	67	45	96	106	96	2.3	189	98	1.9	13.456	-S220	090-12	58
98	104	1.3	9.9	73	41	104	98	104	1.3	174	107	1.0	14.606	-S130	090-12	54
97	105	2.1	9.9	73	41	105	97	105	2.1	173	107	1.7	14.720	-S220	090-12	58
97	106	3.8	9.8	74	41	106	97	106	3.8				14.806	-S400	090-12	62
90	114	1.1	9.1	80	38	114	90	114	1.1				15.979	-S130	090-12	54
86	118	1.9	8.8	83	36	118	86	118	1.9	153	121	1.5	16.571	-S220	090-12	58
79	129	1.0	8.0	90	33	129	79	129	1.0				18.069	-S130	090-12	54
78	130	3.1	7.9	91	33	130	78	130	3.1	139	133	2.9	18.286	-S400	090-12	62
76	134	1.6	7.7	94	32	134	76	134	1.6	135	137	1.5	18.776	-S220	090-12	58
70	145	1.5	7.1	101	30	145	70	145	1.5	125	148	1.4	20.300	-S220	090-12	58
69	147	2.7	7.0	103	29	147	69	147	2.7	123	151	2.5	20.659	-S400	090-12	62
64	160	2.5	6.5	112	27	160	64	160	2.5	113	163	2.3	22.400	-S400	090-12	62
62	164	1.3	6.3	115	26	164	62	164	1.3	110	168	1.3	23.000	-S220	090-12	58
57	179	3.2	5.8	125	24	179	57	179	3.2	101	183	3.0	25.056	-S660	090-12	66
57	180	2.2	5.7	126	24	180	57	180	2.2	100	185	2.1	25.308	-S400	090-12	62
54	188	1.2	5.5	132	23	188	54	188	1.2	96	193	1.1	26.422	-S220	090-12	58
50	203	3.2	5.1	142	21	203	50	203	3.2	89	208	3.0	28.548	-S660	090-12	66
49	208	1.9	5.0	146	21	208	49	208	1.9	87	213	1.8	29.156	-S400	090-12	62
48	213	1.0	4.8	149	20	213	48	213	1.0				29.937	-S220	090-12	58
46	222	3.0	4.7	156	19	222	46	222	3.0	82	227	2.9	31.167	-S660	090-12	66
43	235	1.7	4.4	164	18	235	43	235	1.7	77	240	1.7	32.940	-S400	090-12	62
40	253	2.6	4.1	177	17	253	40	253	2.6	72	259	2.6	35.511	-S660	090-12	66



Selection tables, 4-pole motors

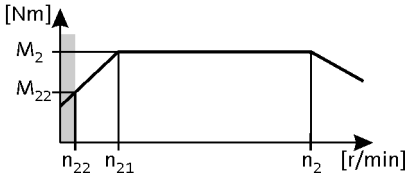

50 Hz: P_N = 1.1 kW
87 Hz: P_N = 2.0 kW

2-stage gearboxes

Mains operation 400 V, 50 Hz			Inverter operation 5 Hz -		- 20 Hz		- 50 Hz (1:10)			- 87 Hz (1:17.4)			i	Product g500	Product MH□MA□□	
n_2 [r/min]	M_2 [Nm]	c	n_{22} [r/min]	M_{22} [Nm]	n_{21} [r/min]	M_2 [Nm]	n_2 [r/min]	M_2 [Nm]	c	n_2 [r/min]	M_2 [Nm]	c				
39	258	1.6	4.0	181	17	258	39	258	1.6	70	265	1.5	36.267	-S400	090-12	62
36	287	1.9	3.6	201	15	287	36	287	1.9	63	294	1.9	40.333	-S660	090-12	66
35	292	1.4	3.5	204	15	292	35	292	1.4	62	299	1.3	40.974	-S400	090-12	62
31	328	1.9	3.2	229	13	328	31	328	1.9	55	335	1.9	45.956	-S660	090-12	66
29	349	1.3	3.0	244	12	349	29	349	1.3	52	357	1.3	48.950	-S660	090-12	66
26	397	1.3	2.6	278	11	397	26	397	1.3	46	407	1.3	55.773	-S660	090-12	66

3-stage gearboxes

Mains operation 400 V, 50 Hz			Inverter operation 5 Hz -		- 20 Hz		- 50 Hz (1:10)			- 87 Hz (1:17.4)			i	Product g500	Product MH□MA□□	
n_2 [r/min]	M_2 [Nm]	c	n_{22} [r/min]	M_{22} [Nm]	n_{21} [r/min]	M_2 [Nm]	n_2 [r/min]	M_2 [Nm]	c	n_2 [r/min]	M_2 [Nm]	c				
29	350	1.8	2.9	245	12	350	29	350	1.8	51	358	1.7	49.867	-S660	090-12	66
25	399	1.6	2.6	279	11	399	25	399	1.6	45	408	1.5	56.818	-S660	090-12	66
22	448	1.5	2.3	314	9.4	448	22	448	1.5	40	459	1.4	63.817	-S660	090-12	66
21	490	1.4	2.1	343	8.6	490	21	490	1.4	36	502	1.3	69.813	-S660	090-12	66
20	510	1.3	2.0	357	8.3	510	20	510	1.3	35	523	1.3	72.713	-S660	090-12	66
18	558	1.2	1.8	391	7.5	558	18	558	1.2	32	572	1.2	79.545	-S660	090-12	66
16	625	1.1	1.6	438	6.7	625	16	625	1.1	29	640	1.0	89.048	-S660	090-12	66



Selection tables, 4-pole motors

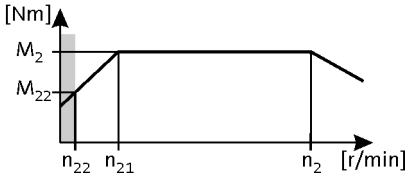

50 Hz: P_N = 1.5 kW
87 Hz: P_N = 2.7 kW

2-stage gearboxes

Mains operation 400 V, 50 Hz			Inverter operation 5 Hz -		- 20 Hz		- 50 Hz (1:10)			- 87 Hz (1:17.4)			i	Product		
n_2 [r/min]	M_2 [Nm]	c	n_{22} [r/min]	M_{22} [Nm]	n_{21} [r/min]	M_2 [Nm]	n_2 [r/min]	M_2 [Nm]	c	n_2 [r/min]	M_2 [Nm]	c		g500	MH□MA□□	
392	35	1.8	40	25	164	35	392	35	1.8	695	36	1.5	3.661	-S130	090-32	54
313	44	4.3	32	31	131	44	313	44	4.3				4.579	-S400	090-32	62
286	49	1.6	29	34	120	49	286	49	1.6	507	49	1.3	5.021	-S130	090-32	54
245	57	4.0	25	40	102	57	245	57	4.0				5.860	-S400	090-32	62
223	62	1.4	23	44	93	62	223	62	1.4	396	63	1.2	6.425	-S130	090-32	54
204	68	1.4	21	48	85	68	204	68	1.4	362	69	1.1	7.029	-S130	090-32	54
187	74	2.9	19	52	78	74	187	74	2.9	332	75	2.4	7.667	-S220	090-32	58
172	81	1.4	17	56	72	81	172	81	1.4				8.322	-S130	090-32	54
155	90	2.5	16	63	65	90	155	90	2.5	274	91	2.0	9.280	-S220	090-32	58
153	91	1.4	15	64	64	91	153	91	1.4				9.411	-S130	090-32	54
137	102	2.2	14	71	57	102	137	102	2.2	242	103	1.8	10.514	-S220	090-32	58
126	111	1.2	13	77	53	111	126	111	1.2				11.413	-S130	090-32	54
121	115	1.9	12	81	51	115	121	115	1.9	214	117	1.6	11.876	-S220	090-32	58
111	125	1.0	11	88	47	125	111	125	1.0				12.907	-S130	090-32	54
111	126	1.8	11	88	46	126	111	126	1.8	196	128	1.4	12.992	-S220	090-32	58
110	127	3.2	11	89	46	127	110	127	3.2	194	129	2.6	13.105	-S400	090-32	62
107	130	1.7	11	91	45	130	107	130	1.7	189	132	1.4	13.456	-S220	090-32	58
100	139	2.9	10	97	42	139	100	139	2.9	178	141	2.4	14.336	-S400	090-32	62
98	143	1.5	9.9	100	41	143	98	143	1.5	173	145	1.3	14.720	-S220	090-32	58
97	143	2.8	9.8	100	41	143	97	143	2.8	172	146	2.3	14.806	-S400	090-32	62
89	157	2.6	9.0	110	37	157	89	157	2.6	157	159	2.1	16.197	-S400	090-32	62
87	160	1.4	8.8	112	36	160	87	160	1.4	154	163	1.1	16.571	-S220	090-32	58
79	177	2.3	7.9	124	33	177	79	177	2.3	139	180	2.1	18.286	-S400	090-32	62
76	182	1.2	7.7	127	32	182	76	182	1.2	136	185	1.1	18.776	-S220	090-32	58
71	197	1.1	7.1	138	30	197	71	197	1.1	125	200	1.1	20.300	-S220	090-32	58
70	200	2.0	7.0	140	29	200	70	200	2.0	123	203	1.9	20.659	-S400	090-32	62
65	212	3.1	6.6	149	27	212	65	212	3.1	116	216	2.9	21.933	-S660	090-32	66
64	217	1.8	6.5	152	27	217	64	217	1.8	114	220	1.7	22.400	-S400	090-32	62
57	243	2.4	5.8	170	24	243	57	243	2.4	102	246	2.2	25.056	-S660	090-32	66
57	245	1.6	5.7	172	24	245	57	245	1.6	101	249	1.5	25.308	-S400	090-32	62
50	276	2.4	5.1	194	21	276	50	276	2.4	89	281	2.2	28.548	-S660	090-32	66
49	282	1.4	5.0	198	21	282	49	282	1.4	87	287	1.3	29.156	-S400	090-32	62
46	302	2.2	4.7	211	19	302	46	302	2.2	82	306	2.2	31.167	-S660	090-32	66
44	319	1.3	4.4	223	18	319	44	319	1.3	77	324	1.2	32.940	-S400	090-32	62
40	344	1.9	4.1	241	17	344	40	344	1.9	72	349	1.9	35.511	-S660	090-32	66



Selection tables, 4-pole motors

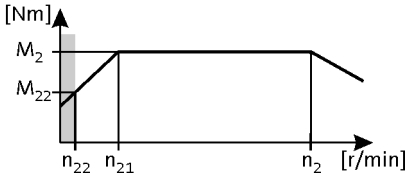

50 Hz: P_N = 1.5 kW
87 Hz: P_N = 2.7 kW

2-stage gearboxes

Mains operation 400 V, 50 Hz			Inverter operation 5 Hz -		- 20 Hz		- 50 Hz (1:10)			- 87 Hz (1:17.4)			i	Product		
n_2 [r/min]	M_2 [Nm]	c	n_{22} [r/min]	M_{22} [Nm]	n_{21} [r/min]	M_2 [Nm]	n_2 [r/min]	M_2 [Nm]	c	n_2 [r/min]	M_2 [Nm]	c		g500	MH□MA□□	
40	351	1.1	4.0	246	17	351	40	351	1.1	70	356	1.1	36.267	-S400	090-32	62
36	391	1.4	3.6	273	15	391	36	391	1.4	63	396	1.4	40.333	-S660	090-32	66
35	397	1.0	3.5	278	15	397	35	397	1.0				40.974	-S400	090-32	62
31	445	1.4	3.2	312	13	445	31	445	1.4	55	452	1.4	45.956	-S660	090-32	66

3-stage gearboxes

Mains operation 400 V, 50 Hz			Inverter operation 5 Hz -		- 20 Hz		- 50 Hz (1:10)			- 87 Hz (1:17.4)			i	Product		
n_2 [r/min]	M_2 [Nm]	c	n_{22} [r/min]	M_{22} [Nm]	n_{21} [r/min]	M_2 [Nm]	n_2 [r/min]	M_2 [Nm]	c	n_2 [r/min]	M_2 [Nm]	c		g500	MH□MA□□	
29	476	1.3	2.9	333	12	476	29	476	1.3	51	483	1.2	49.867	-S660	090-32	66
25	542	1.2	2.6	379	11	542	25	542	1.2	45	550	1.1	56.818	-S660	090-32	66
23	609	1.1	2.3	426	9.4	609	23	609	1.1	40	618	1.0	63.817	-S660	090-32	66



Selection tables, 4-pole motors

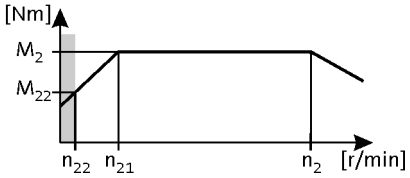

50 Hz: P_N = 2.2 kW
87 Hz: P_N = 3.9 kW

2-stage gearboxes

Mains operation 400 V, 50 Hz			Inverter operation 5 Hz -		- 20 Hz		- 50 Hz (1:10)			- 87 Hz (1:17.4)			i	Product		
n_2 [r/min]	M_2 [Nm]	c	n_{22} [r/min]	M_{22} [Nm]	n_{21} [r/min]	M_2 [Nm]	n_2 [r/min]	M_2 [Nm]	c	n_2 [r/min]	M_2 [Nm]	c		g500	MH□MA□□	
376	54	3.3	38	38	156	54	376	54	3.3	665	54	2.7	3.840	-S220	100-12	58
369	55	5.6	37	39	153	55	369	55	5.6				3.920	-S660	100-12	66
316	65	3.8	32	45	131	65	316	65	3.8	558	65	3.2	4.579	-S400	100-12	62
274	74	2.4	28	52	114	74	274	74	2.4	485	74	2.0	5.267	-S220	100-12	58
247	83	3.1	25	58	102	83	247	83	3.1	436	83	2.6	5.860	-S400	100-12	62
225	90	2.9	23	63	94	90	225	90	2.9	399	91	2.4	6.411	-S400	100-12	62
214	95	2.3	21	67	89	95	214	95	2.3				6.767	-S220	100-12	58
194	105	3.5	19	74	80	105	194	105	3.5	342	106	2.9	7.467	-S400	100-12	62
189	108	2.0	19	76	78	108	189	108	2.0				7.667	-S220	100-12	58
171	119	3.2	17	83	71	119	171	119	3.2	303	119	2.7	8.436	-S400	100-12	62
156	131	1.7	16	91	65	131	156	131	1.7				9.280	-S220	100-12	58
141	144	2.8	14	101	59	144	141	144	2.8	250	145	2.3	10.240	-S400	100-12	62
137	148	1.5	14	104	57	148	137	148	1.5				10.514	-S220	100-12	58
125	163	2.5	13	114	52	163	125	163	2.5	221	164	2.1	11.569	-S400	100-12	62
122	168	1.3	12	117	51	168	122	168	1.3				11.876	-S220	100-12	58
111	183	1.2	11	128	46	183	111	183	1.2				12.992	-S220	100-12	58
110	185	2.2	11	129	46	185	110	185	2.2	195	185	1.8	13.105	-S400	100-12	62
107	190	1.2	11	133	45	190	107	190	1.2				13.456	-S220	100-12	58
101	202	2.0	10	141	42	202	101	202	2.0	178	203	1.7	14.336	-S400	100-12	62
98	208	1.1	9.9	145	41	208	98	208	1.1				14.720	-S220	100-12	58
98	209	1.9	9.8	146	41	209	98	209	1.9	173	209	1.6	14.806	-S400	100-12	62
92	222	3.0	9.2	155	38	222	92	222	3.0	163	222	2.5	15.714	-S660	100-12	66
89	228	1.8	9.0	160	37	228	89	228	1.8	158	229	1.5	16.197	-S400	100-12	62
81	253	2.6	8.1	176	34	253	81	253	2.6	143	253	2.2	17.905	-S660	100-12	66
79	258	1.6	7.9	180	33	258	79	258	1.6	140	259	1.5	18.286	-S400	100-12	62
75	272	2.4	7.5	190	31	272	75	272	2.4	133	272	2.3	19.250	-S660	100-12	66
70	291	1.4	7.0	203	29	291	70	291	1.4	124	292	1.3	20.659	-S400	100-12	62
66	309	2.1	6.6	216	27	309	66	309	2.1	117	310	2.0	21.933	-S660	100-12	66
65	316	1.3	6.5	221	27	316	65	316	1.3	114	317	1.2	22.400	-S400	100-12	62
58	353	1.6	5.8	247	24	353	58	353	1.6	102	354	1.6	25.056	-S660	100-12	66
57	357	1.1	5.7	249	24	357	57	357	1.1	101	358	1.1	25.308	-S400	100-12	62
51	403	1.6	5.1	281	21	403	51	403	1.6	90	404	1.6	28.548	-S660	100-12	66
46	440	1.5	4.7	307	19	440	46	440	1.5	82	441	1.5	31.167	-S660	100-12	66
41	501	1.3	4.1	350	17	501	41	501	1.3	72	502	1.3	35.511	-S660	100-12	66



Selection tables, 4-pole motors

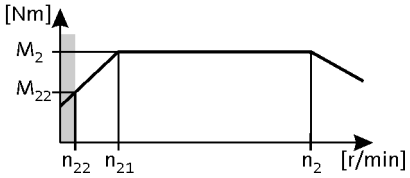

50 Hz: P_N = 3.0 kW
87 Hz: P_N = 5.4 kW

2-stage gearboxes

Mains operation 400 V, 50 Hz			Inverter operation 5 Hz -		- 20 Hz		- 50 Hz (1:10)			- 87 Hz (1:17.4)			i	Product		
n_2 [r/min]	M_2 [Nm]	c	n_{22} [r/min]	M_{22} [Nm]	n_{21} [r/min]	M_2 [Nm]	n_2 [r/min]	M_2 [Nm]	c	n_2 [r/min]	M_2 [Nm]	c		g500	MH□MA□□	
433	64	3.2	43	45	180	64	433	64	3.2	765	65	2.6	3.339	-S400	100-32	62
376	74	2.4	38	52	156	74	376	74	2.4				3.840	-S220	100-32	58
369	75	4.1	37	53	153	75	369	75	4.1				3.920	-S660	100-32	66
316	88	2.8	32	62	131	88	316	88	2.8	558	90	2.3	4.579	-S400	100-32	62
274	101	1.8	28	71	114	101	274	101	1.8				5.267	-S220	100-32	58
247	113	2.3	25	79	102	113	247	113	2.3	436	115	1.9	5.860	-S400	100-32	62
225	123	2.1	23	86	94	123	225	123	2.1	399	126	1.7	6.411	-S400	100-32	62
214	130	1.7	21	91	89	130	214	130	1.7				6.767	-S220	100-32	58
194	144	2.5	19	100	80	144	194	144	2.5				7.467	-S400	100-32	62
189	147	1.5	19	103	78	147	189	147	1.5				7.667	-S220	100-32	58
171	162	2.3	17	113	71	162	171	162	2.3				8.436	-S400	100-32	62
156	179	1.2	16	125	65	179	156	179	1.2				9.280	-S220	100-32	58
144	193	3.2	15	135	60	193	144	193	3.2	255	196	2.7	10.027	-S660	100-32	66
141	197	2.0	14	138	59	197	141	197	2.0	250	201	1.7	10.240	-S400	100-32	62
137	202	1.1	14	141	57	202	137	202	1.1				10.514	-S220	100-32	58
128	217	3.1	13	151	53	217	128	217	3.1	227	221	2.5	11.262	-S660	100-32	66
125	223	1.8	13	156	52	223	125	223	1.8				11.569	-S400	100-32	62
117	237	2.8	12	166	49	237	117	237	2.8	207	241	2.3	12.320	-S660	100-32	66
113	247	2.7	11	173	47	247	113	247	2.7	199	251	2.2	12.832	-S660	100-32	66
110	252	1.6	11	176	46	252	110	252	1.6	195	257	1.3	13.105	-S400	100-32	62
103	270	2.4	10	189	43	270	103	270	2.4	182	275	2.0	14.037	-S660	100-32	66
101	276	1.5	10	193	42	276	101	276	1.5	178	281	1.2	14.336	-S400	100-32	62
98	285	1.4	9.8	199	41	285	98	285	1.4				14.806	-S400	100-32	62
92	302	2.2	9.2	211	38	302	92	302	2.2	163	308	1.8	15.714	-S660	100-32	66
89	312	1.3	9.0	218	37	312	89	312	1.3	158	317	1.1	16.197	-S400	100-32	62
81	344	1.9	8.1	241	34	344	81	344	1.9	143	351	1.6	17.905	-S660	100-32	66
79	352	1.1	7.9	246	33	352	79	352	1.1	140	358	1.1	18.286	-S400	100-32	62
75	370	1.8	7.5	259	31	370	75	370	1.8	133	377	1.7	19.250	-S660	100-32	66
70	397	1.0	7.0	278	29	397	70	397	1.0				20.659	-S400	100-32	62
66	422	1.6	6.6	295	27	422	66	422	1.6	117	429	1.5	21.933	-S660	100-32	66
58	482	1.2	5.8	337	24	482	58	482	1.2	102	491	1.1	25.056	-S660	100-32	66
51	549	1.2	5.1	384	21	549	51	549	1.2	90	559	1.1	28.548	-S660	100-32	66
46	599	1.1	4.7	419	19	599	46	599	1.1	82	610	1.1	31.167	-S660	100-32	66



Selection tables, 4-pole motors

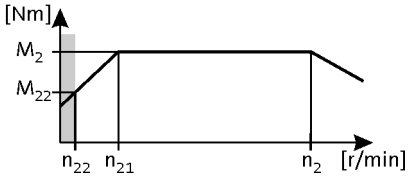

50 Hz: P_N = 4.0 kW
87 Hz: P_N = 7.1 kW

2-stage gearboxes

Mains operation 400 V, 50 Hz			Inverter operation 5 Hz -		- 20 Hz		- 50 Hz (1:10)			- 87 Hz (1:17.4)			i	Product		
n_2 [r/min]	M_2 [Nm]	c	n_{22} [r/min]	M_{22} [Nm]	n_{21} [r/min]	M_2 [Nm]	n_2 [r/min]	M_2 [Nm]	c	n_2 [r/min]	M_2 [Nm]	c		g500	MH□MA□□	
436	85	2.4	43	53	180	85	436	85	2.4				3.339	-S400	112-22	62
371	100	3.4	37	63	153	100	371	100	3.4				3.920	-S660	112-22	66
318	117	2.1	32	73	131	117	318	117	2.1	560	117	1.7	4.579	-S400	112-22	62
248	149	1.7	25	94	102	149	248	149	1.7	438	150	1.4	5.860	-S400	112-22	62
227	163	1.6	23	102	94	163	227	163	1.6	400	164	1.3	6.411	-S400	112-22	62
212	175	2.8	21	110	87	175	212	175	2.8	373	176	2.4	6.880	-S660	112-22	66
199	186	3.2	20	117	82	186	199	186	3.2				7.311	-S660	112-22	66
195	190	1.9	19	119	80	190	195	190	1.9				7.467	-S400	112-22	62
173	215	1.8	17	135	71	215	173	215	1.8				8.436	-S400	112-22	62
165	224	2.9	17	140	68	224	165	224	2.9				8.800	-S660	112-22	66
145	255	2.5	15	160	60	255	145	255	2.5				10.027	-S660	112-22	66
142	261	1.5	14	163	59	261	142	261	1.5				10.240	-S400	112-22	62
129	287	2.3	13	180	53	287	129	287	2.3	228	289	1.9	11.262	-S660	112-22	66
126	295	1.4	13	185	52	295	126	295	1.4				11.569	-S400	112-22	62
118	314	2.1	12	197	49	314	118	314	2.1	208	316	1.8	12.320	-S660	112-22	66
113	327	2.0	11	205	47	327	113	327	2.0	200	329	1.7	12.832	-S660	112-22	66
111	334	1.2	11	209	46	334	111	334	1.2				13.105	-S400	112-22	62
104	358	1.9	10	224	43	358	104	358	1.9				14.037	-S660	112-22	66
102	365	1.1	10	229	42	365	102	365	1.1				14.336	-S400	112-22	62
98	377	1.1	9.8	236	41	377	98	377	1.1				14.806	-S400	112-22	62
93	400	1.7	9.2	251	38	400	93	400	1.7	163	403	1.4	15.714	-S660	112-22	66
81	456	1.5	8.1	286	34	456	81	456	1.5	143	459	1.2	17.905	-S660	112-22	66
76	490	1.4	7.5	307	31	490	76	490	1.4	133	494	1.3	19.250	-S660	112-22	66
66	559	1.2	6.6	350	27	559	66	559	1.2	117	562	1.1	21.933	-S660	112-22	66



Selection tables, 4-pole motors

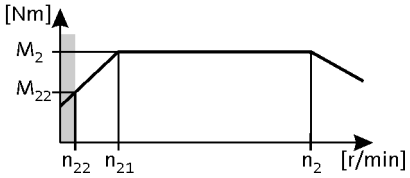

50 Hz: P_N = 5.5 kW
87 Hz: P_N = 9.7 kW

2-stage gearboxes

Mains operation 400 V, 50 Hz			Inverter operation 5 Hz -		- 20 Hz		- 50 Hz (1:10)			- 87 Hz (1:17.4)			i	Product		
n_2 [r/min]	M_2 [Nm]	c	n_{22} [r/min]	M_{22} [Nm]	n_{21} [r/min]	M_2 [Nm]	n_2 [r/min]	M_2 [Nm]	c	n_2 [r/min]	M_2 [Nm]	c		g500	MH□MA□□	
375	136	3.1	37	85	153	136	375	136	3.1				3.920	-S660	132-12	66
273	186	2.6	27	116	112	186	273	186	2.6				5.376	-S660	132-12	66
229	222	2.7	23	139	94	222	229	222	2.7				6.417	-S660	132-12	66
214	238	2.1	21	149	87	238	214	238	2.1				6.880	-S660	132-12	66
201	253	2.3	20	158	82	253	201	253	2.3				7.311	-S660	132-12	66
167	305	2.1	17	191	68	305	167	305	2.1				8.800	-S660	132-12	66
147	348	1.8	15	217	60	348	147	348	1.8				10.027	-S660	132-12	66
131	390	1.7	13	244	53	390	131	390	1.7				11.262	-S660	132-12	66
119	427	1.6	12	267	49	427	119	427	1.6				12.320	-S660	132-12	66
115	445	1.5	11	278	47	445	115	445	1.5				12.832	-S660	132-12	66
105	487	1.4	10	304	43	487	105	487	1.4				14.037	-S660	132-12	66
94	545	1.2	9.2	340	38	545	94	545	1.2				15.714	-S660	132-12	66
82	621	1.1	8.1	388	34	621	82	621	1.1				17.905	-S660	132-12	66



Selection tables, 4-pole motors

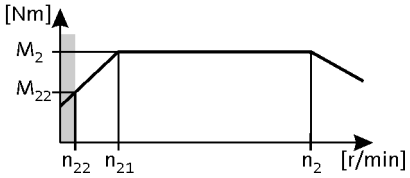

50 Hz: P_N = 7.5 kW
87 Hz: P_N = 13.2 kW

2-stage gearboxes

Mains operation 400 V, 50 Hz			Inverter operation 5 Hz -		- 20 Hz		- 50 Hz (1:10)			- 87 Hz (1:17.4)			i	Product		
n_2 [r/min]	M_2 [Nm]	c	n_{22} [r/min]	M_{22} [Nm]	n_{21} [r/min]	M_2 [Nm]	n_2 [r/min]	M_2 [Nm]	c	n_2 [r/min]	M_2 [Nm]	c		g500	MH□MA□□	
372	187	2.3	37	117	153	187	372	187	2.3				3.920	-S660	132-22	66
272	256	1.9	27	160	112	256	272	256	1.9				5.376	-S660	132-22	66
228	305	2.0	23	191	94	305	228	305	2.0				6.417	-S660	132-22	66
212	327	1.5	21	205	87	327	212	327	1.5				6.880	-S660	132-22	66
200	348	1.7	20	218	82	348	200	348	1.7				7.311	-S660	132-22	66
166	419	1.5	17	262	68	419	166	419	1.5				8.800	-S660	132-22	66
146	477	1.3	15	299	60	477	146	477	1.3				10.027	-S660	132-22	66
130	536	1.2	13	335	53	536	130	536	1.2				11.262	-S660	132-22	66
119	586	1.1	12	367	49	586	119	586	1.1				12.320	-S660	132-22	66
114	611	1.1	11	382	47	611	114	611	1.1				12.832	-S660	132-22	66



Selection tables, 2-pole motors

50 Hz: P_N = 0.18 kW

2-stage gearboxes

Mains operation 400 V, 50 Hz			i	Product		
n_2 [r/min]	M_2 [Nm]	c		g500	MD□MA□□	
68	25	5.3	40.422	-S130	063-11	74
60	28	4.7	45.711	-S130	063-11	74
54	31	4.2	51.230	-S130	063-11	74
47	35	3.7	57.933	-S130	063-11	74
43	39	3.3	64.200	-S130	063-11	74
38	44	2.9	72.600	-S130	063-11	74
32	51	2.0	84.581	-S130	063-11	74
29	58	2.0	95.648	-S130	063-11	74



Selection tables, 2-pole motors

50 Hz: P_N = 0.25 kW

2-stage gearboxes

Mains operation 400 V, 50 Hz			i	Product		
n_2 [r/min]	M_2 [Nm]	c		g500	MD□MA□□	
386	6.0	5.2	7.029	-S130	063-31	74
170	14	5.2	15.979	-S130	063-31	74
150	15	5.9	18.069	-S130	063-31	74
133	17	5.5	20.381	-S130	063-31	74
118	20	5.5	23.048	-S130	063-31	74
108	27	4.9	31.387	-S130	063-31	74
76	30	4.3	35.493	-S130	063-31	74
67	35	3.8	40.422	-S130	063-31	74
59	39	3.3	45.711	-S130	063-31	74
53	44	3.0	51.230	-S130	063-31	74
47	50	2.6	57.933	-S130	063-31	74
42	55	2.4	64.200	-S130	063-31	74
41	56	2.8	65.975	-S220	063-31	78
37	62	2.1	72.600	-S130	063-31	74
36	64	2.8	74.750	-S220	063-31	78
32	72	1.4	84.581	-S130	063-31	74
28	82	1.4	95.648	-S130	063-31	74



Selection tables, 2-pole motors

50 Hz: P_N = 0.37 kW

2-stage gearboxes

Mains operation 400 V, 50 Hz			i	Product		
n_2 [r/min]	M_2 [Nm]	c		g500	MD□MA□□	
186	18	5.8	14.606	-S130	071-11	74
170	20	5.3	15.979	-S130	071-11	74
151	23	5.3	18.069	-S130	071-11	74
134	26	4.7	20.381	-S130	071-11	74
118	29	4.2	23.048	-S130	071-11	74
109	31	3.9	24.967	-S130	071-11	74
119	36	3.4	28.233	-S130	071-11	74
107	40	3.3	31.387	-S130	071-11	74
77	45	2.9	35.493	-S130	071-11	74
67	51	2.6	40.422	-S130	071-11	74
60	58	2.3	45.711	-S130	071-11	74
53	65	2.0	51.230	-S130	071-11	74
47	73	1.8	57.933	-S130	071-11	74
47	74	3.0	58.486	-S220	071-11	78
42	81	1.6	64.200	-S130	071-11	74
41	83	2.1	65.975	-S220	071-11	78
38	91	1.4	72.600	-S130	071-11	74
36	94	2.1	74.750	-S220	071-11	78



Selection tables, 2-pole motors

50 Hz: P_N = 0.55 kW

2-stage gearboxes

Mains operation 400 V, 50 Hz			i	Product		
n_2 [r/min]	M_2 [Nm]	c		g500	MD□MA□□	
718	7.0	5.1	3.661	-S130	071-31	74
524	10	5.1	5.021	-S130	071-31	74
409	12	4.7	6.425	-S130	071-31	74
374	14	4.7	7.029	-S130	071-31	74
316	16	5.1	8.322	-S130	071-31	74
280	18	5.1	9.411	-S130	071-31	74
230	22	4.9	11.413	-S130	071-31	74
204	25	4.3	12.907	-S130	071-31	74
180	28	3.8	14.606	-S130	071-31	74
165	31	3.5	15.979	-S130	071-31	74
146	35	3.5	18.069	-S130	071-31	74
129	39	3.1	20.381	-S130	071-31	74
114	45	2.7	23.048	-S130	071-31	74
105	48	2.5	24.967	-S130	071-31	74
115	55	2.2	28.233	-S130	071-31	74
103	61	2.1	31.387	-S130	071-31	74
74	69	1.9	35.493	-S130	071-31	74
71	72	3.1	37.238	-S220	071-31	78
65	78	1.7	40.422	-S130	071-31	74
62	82	2.7	42.533	-S220	071-31	78
58	89	1.5	45.711	-S130	071-31	74
55	93	2.4	48.190	-S220	071-31	78
51	99	1.3	51.230	-S130	071-31	74
51	100	2.2	51.620	-S220	071-31	78
46	110	2.4	56.960	-S400	071-31	82
45	112	1.2	57.933	-S130	071-31	74
45	113	1.9	58.486	-S220	071-31	78
41	124	1.1	64.200	-S130	071-31	74
41	125	2.4	64.354	-S400	071-31	82
40	128	1.3	65.975	-S220	071-31	78
35	145	1.3	74.750	-S220	071-31	78



Selection tables, 6-pole motors

50 Hz: P_N = 0.18 kW

2-stage gearboxes

Mains operation 400 V, 50 Hz			i	Product		
n_2 [r/min]	M_2 [Nm]	c		g500	MD□MA□□	
72	23	5.6	12.907	-S130	071-13	90
64	26	5.0	14.606	-S130	071-13	90
58	29	4.5	15.979	-S130	071-13	90
52	32	4.0	18.069	-S130	071-13	90
46	37	3.6	20.381	-S130	071-13	90
40	41	3.2	23.048	-S130	071-13	90
37	45	2.9	24.967	-S130	071-13	90
33	51	2.6	28.233	-S130	071-13	90
30	56	2.3	31.387	-S130	071-13	90
26	64	2.0	35.493	-S130	071-13	90
23	72	1.8	40.422	-S130	071-13	90
22	76	2.9	42.533	-S220	071-13	94
20	82	1.6	45.711	-S130	071-13	90
19	86	2.6	48.190	-S220	071-13	94
18	92	1.4	51.230	-S130	071-13	90
18	93	2.4	51.620	-S220	071-13	94
16	102	2.6	56.960	-S400	071-13	98
16	104	1.3	57.933	-S130	071-13	90
16	105	2.1	58.486	-S220	071-13	94
15	115	1.1	64.200	-S130	071-13	90
15	115	2.6	64.354	-S400	071-13	98
14	118	1.5	65.975	-S220	071-13	94
13	130	1.0	72.600	-S130	071-13	90
12	134	1.5	74.750	-S220	071-13	94

3-stage gearboxes

Mains operation 400 V, 50 Hz			i	Product		
n_2 [r/min]	M_2 [Nm]	c		g500	MD□MA□□	
23	71	3.1	40.012	-S220	071-13	94
21	80	2.8	45.333	-S220	071-13	94
18	93	2.4	52.587	-S220	071-13	94
16	105	2.1	59.581	-S220	071-13	94
14	119	1.9	67.298	-S220	071-13	94
13	131	3.1	74.260	-S400	071-13	98
12	135	1.6	76.249	-S220	071-13	94
11	148	2.7	83.900	-S400	071-13	98
11	152	1.5	86.079	-S220	071-13	94
12	168	2.4	94.984	-S400	071-13	98
12	172	1.3	97.528	-S220	071-13	94
11	190	2.1	107.314	-S400	071-13	98
10	197	1.1	111.747	-S220	071-13	94



Selection tables, 6-pole motors

50 Hz: P_N = 0.18 kW

3-stage gearboxes

Mains operation 400 V, 50 Hz			i	Product		
n_2 [r/min]	M_2 [Nm]	c		g500	MD□MA□□	
7.5	218	1.8	123.307	-S400	071-13	98
7.5	220	3.0	124.289	-S660	071-13	102
6.8	242	2.7	137.133	-S660	071-13	102
6.7	246	1.6	139.313	-S400	071-13	98
6.0	276	2.4	156.249	-S660	071-13	102
5.9	279	1.4	158.019	-S400	071-13	98
5.3	312	2.1	176.611	-S660	071-13	102
5.2	315	1.3	178.531	-S400	071-13	98
4.6	355	1.9	201.230	-S660	071-13	102
4.5	361	1.1	204.412	-S400	071-13	98
4.2	395	1.7	223.833	-S660	071-13	102
3.6	450	1.5	255.034	-S660	071-13	102
3.3	495	1.2	280.500	-S660	071-13	102
2.9	565	1.2	319.600	-S660	071-13	102



Selection tables, 6-pole motors

50 Hz: P_N = 0.25 kW

2-stage gearboxes

Mains operation 400 V, 50 Hz			i	Product		
n_2 [r/min]	M_2 [Nm]	c		g500	MD□MA□□	
254	9.0	4.7	3.661	-S130	071-33	90
185	13	4.7	5.021	-S130	071-33	90
145	16	4.4	6.425	-S130	071-33	90
132	18	4.4	7.029	-S130	071-33	90
112	21	4.7	8.322	-S130	071-33	90
121	23	4.7	9.411	-S130	071-33	90
82	28	4.6	11.413	-S130	071-33	90
72	32	4.0	12.907	-S130	071-33	90
64	36	3.6	14.606	-S130	071-33	90
58	40	3.3	15.979	-S130	071-33	90
52	45	2.9	18.069	-S130	071-33	90
46	51	2.6	20.381	-S130	071-33	90
40	57	2.3	23.048	-S130	071-33	90
37	62	2.1	24.967	-S130	071-33	90
33	70	1.9	28.233	-S130	071-33	90
31	75	3.0	29.937	-S220	071-33	94
30	78	1.7	31.387	-S130	071-33	90
28	82	2.7	32.867	-S220	071-33	94
26	88	1.5	35.493	-S130	071-33	90
26	90	3.1	36.267	-S400	071-33	98
25	93	2.4	37.238	-S220	071-33	94
23	100	3.1	40.333	-S660	071-33	102
23	101	1.3	40.422	-S130	071-33	90
23	102	3.1	40.974	-S400	071-33	98
22	106	2.1	42.533	-S220	071-33	94
20	114	1.1	45.711	-S130	071-33	90
20	114	3.1	45.956	-S660	071-33	102
20	117	2.7	46.933	-S400	071-33	98
19	120	1.8	48.190	-S220	071-33	94
19	122	2.7	48.950	-S660	071-33	102
18	128	1.0	51.230	-S130	071-33	90
18	129	1.7	51.620	-S220	071-33	94
18	132	2.6	53.026	-S400	071-33	98
17	139	2.7	55.773	-S660	071-33	102
16	142	1.9	56.960	-S400	071-33	98
16	146	1.5	58.486	-S220	071-33	94
15	160	1.9	64.354	-S400	071-33	98



Selection tables, 6-pole motors

50 Hz: P_N = 0.25 kW

2-stage gearboxes

Mains operation 400 V, 50 Hz			i	Product		
n_2 [r/min]	M_2 [Nm]	c		g500	MD□MA□□	
14	164	1.0	65.975	-S220	071-33	94
12	186	1.0	74.750	-S220	071-33	94

3-stage gearboxes

Mains operation 400 V, 50 Hz			i	Product		
n_2 [r/min]	M_2 [Nm]	c		g500	MD□MA□□	
23	98	2.2	40.012	-S220	071-33	94
21	111	2.0	45.333	-S220	071-33	94
18	129	1.7	52.587	-S220	071-33	94
16	142	2.8	58.027	-S400	071-33	98
16	146	1.5	59.581	-S220	071-33	94
14	161	2.5	65.559	-S400	071-33	98
14	165	1.3	67.298	-S220	071-33	94
13	182	2.2	74.260	-S400	071-33	98
12	187	1.2	76.249	-S220	071-33	94
11	206	1.9	83.900	-S400	071-33	98
11	211	1.0	86.079	-S220	071-33	94
10	218	3.0	89.048	-S660	071-33	102
12	233	1.7	94.984	-S400	071-33	98
11	249	2.7	101.460	-S660	071-33	102
11	263	1.5	107.314	-S400	071-33	98
11	268	2.5	109.083	-S660	071-33	102
7.5	302	1.3	123.307	-S400	071-33	98
7.5	305	2.2	124.289	-S660	071-33	102
6.8	336	2.0	137.133	-S660	071-33	102
6.7	342	1.2	139.313	-S400	071-33	98
6.0	383	1.7	156.249	-S660	071-33	102
5.9	388	1.0	158.019	-S400	071-33	98
5.3	433	1.5	176.611	-S660	071-33	102
4.6	494	1.3	201.230	-S660	071-33	102
4.2	549	1.2	223.833	-S660	071-33	102
3.6	626	1.1	255.034	-S660	071-33	102



Selection tables, 6-pole motors

50 Hz: P_N = 0.37 kW

2-stage gearboxes

Mains operation 400 V, 50 Hz			i	Product		
n_2 [r/min]	M_2 [Nm]	c		g500	MD□MA□□	
260	13	4.8	3.661	-S130	080-13	90
189	18	4.2	5.021	-S130	080-13	90
162	21	5.7	5.860	-S400	080-13	98
148	23	3.8	6.425	-S130	080-13	90
135	25	3.6	7.029	-S130	080-13	90
114	30	3.9	8.322	-S130	080-13	90
101	34	3.7	9.411	-S130	080-13	90
102	41	3.2	11.413	-S130	080-13	90
74	47	2.8	12.907	-S130	080-13	90
65	53	2.5	14.606	-S130	080-13	90
64	53	5.7	14.806	-S400	080-13	98
60	58	2.3	15.979	-S130	080-13	90
53	65	2.0	18.069	-S130	080-13	90
51	68	3.3	18.776	-S220	080-13	94
47	73	3.0	20.300	-S220	080-13	94
47	74	1.8	20.381	-S130	080-13	90
41	83	2.7	23.000	-S220	080-13	94
41	83	1.6	23.048	-S130	080-13	90
38	90	1.4	24.967	-S130	080-13	90
36	95	2.3	26.422	-S220	080-13	94
34	102	1.3	28.233	-S130	080-13	90
32	108	2.0	29.937	-S220	080-13	94
30	113	1.2	31.387	-S130	080-13	90
29	119	1.9	32.867	-S220	080-13	94
27	128	1.0	35.493	-S130	080-13	90
26	131	3.1	36.267	-S400	080-13	98
26	134	1.6	37.238	-S220	080-13	94
23	148	2.7	40.974	-S400	080-13	98
22	153	1.4	42.533	-S220	080-13	94
20	169	1.9	46.933	-S400	080-13	98
20	174	1.3	48.190	-S220	080-13	94
19	177	2.5	48.950	-S660	080-13	102
18	186	1.2	51.620	-S220	080-13	94
18	191	1.8	53.026	-S400	080-13	98
17	201	2.5	55.773	-S660	080-13	102
17	206	1.3	56.960	-S400	080-13	98
16	211	1.0	58.486	-S220	080-13	94



Selection tables, 6-pole motors

50 Hz: P_N = 0.37 kW

2-stage gearboxes

Mains operation 400 V, 50 Hz			i	Product		
n_2 [r/min]	M_2 [Nm]	c		g500	MD□MA□□	
15	232	1.3	64.354	-S400	080-13	98

3-stage gearboxes

Mains operation 400 V, 50 Hz			i	Product		
n_2 [r/min]	M_2 [Nm]	c		g500	MD□MA□□	
18	187	1.2	52.587	-S220	080-13	94
17	202	3.2	56.818	-S660	080-13	102
16	206	1.9	58.027	-S400	080-13	98
16	212	1.0	59.581	-S220	080-13	94
15	227	2.9	63.817	-S660	080-13	102
15	233	1.7	65.559	-S400	080-13	98
14	248	2.7	69.813	-S660	080-13	102
13	258	2.6	72.713	-S660	080-13	102
13	264	1.5	74.260	-S400	080-13	98
12	283	2.3	79.545	-S660	080-13	102
11	298	1.3	83.900	-S400	080-13	98
11	317	2.1	89.048	-S660	080-13	102
10	338	1.2	94.984	-S400	080-13	98
11	361	1.8	101.460	-S660	080-13	102
11	381	1.1	107.314	-S400	080-13	98
11	388	1.7	109.083	-S660	080-13	102
7.6	442	1.5	124.289	-S660	080-13	102
6.9	487	1.4	137.133	-S660	080-13	102
6.1	555	1.2	156.249	-S660	080-13	102
5.4	628	1.1	176.611	-S660	080-13	102



Selection tables, 6-pole motors

50 Hz: P_N = 0.55 kW

2-stage gearboxes

Mains operation 400 V, 50 Hz			i	Product		
n_2 [r/min]	M_2 [Nm]	c		g500	MD□MA□□	
254	20	3.1	3.661	-S130	080-33	90
185	28	2.8	5.021	-S130	080-33	90
159	32	3.7	5.860	-S400	080-33	98
145	35	2.5	6.425	-S130	080-33	90
132	39	2.4	7.029	-S130	080-33	90
112	46	2.5	8.322	-S130	080-33	90
121	52	2.4	9.411	-S130	080-33	90
82	63	2.1	11.413	-S130	080-33	90
72	71	1.8	12.907	-S130	080-33	90
72	71	3.1	12.992	-S220	080-33	94
69	74	3.0	13.456	-S220	080-33	94
64	80	1.6	14.606	-S130	080-33	90
63	81	2.7	14.720	-S220	080-33	94
63	81	3.7	14.806	-S400	080-33	98
58	88	1.5	15.979	-S130	080-33	90
56	91	2.4	16.571	-S220	080-33	94
52	99	1.3	18.069	-S130	080-33	90
50	103	2.1	18.776	-S220	080-33	94
46	111	2.0	20.300	-S220	080-33	94
46	112	1.2	20.381	-S130	080-33	90
42	123	3.1	22.400	-S400	080-33	98
40	126	1.8	23.000	-S220	080-33	94
40	126	1.0	23.048	-S130	080-33	90
37	137	3.1	25.056	-S660	080-33	102
37	139	2.9	25.308	-S400	080-33	98
35	145	1.5	26.422	-S220	080-33	94
33	156	3.1	28.548	-S660	080-33	102
32	160	2.5	29.156	-S400	080-33	98
31	164	1.3	29.937	-S220	080-33	94
30	171	2.6	31.167	-S660	080-33	102
28	180	1.2	32.867	-S220	080-33	94
28	180	2.2	32.940	-S400	080-33	98
26	195	2.6	35.511	-S660	080-33	102
26	199	2.0	36.267	-S400	080-33	98
25	204	1.1	37.238	-S220	080-33	94
23	221	2.4	40.333	-S660	080-33	102
23	225	1.8	40.974	-S400	080-33	98



Selection tables, 6-pole motors

50 Hz: P_N = 0.55 kW

2-stage gearboxes

Mains operation 400 V, 50 Hz			i	Product		
n_2 [r/min]	M_2 [Nm]	c		g500	MD□MA□□	
20	252	2.4	45.956	-S660	080-33	102
20	257	1.2	46.933	-S400	080-33	98
19	268	1.7	48.950	-S660	080-33	102
18	291	1.2	53.026	-S400	080-33	98
17	306	1.7	55.773	-S660	080-33	102

3-stage gearboxes

Mains operation 400 V, 50 Hz			i	Product		
n_2 [r/min]	M_2 [Nm]	c		g500	MD□MA□□	
19	269	2.3	49.867	-S660	080-33	102
16	307	2.1	56.818	-S660	080-33	102
16	313	1.3	58.027	-S400	080-33	98
15	344	1.9	63.817	-S660	080-33	102
14	354	1.1	65.559	-S400	080-33	98
13	377	1.8	69.813	-S660	080-33	102
13	392	1.7	72.713	-S660	080-33	102
13	401	1.0	74.260	-S400	080-33	98
12	429	1.5	79.545	-S660	080-33	102
10	481	1.4	89.048	-S660	080-33	102
11	548	1.2	101.460	-S660	080-33	102
11	589	1.1	109.083	-S660	080-33	102



Dimensions, notes

Notes on the dimensions

The following legend shows the layout of the dimension sheets.

Product gearbox

g500-S130

Driven shaft design

Abmessungen mit Hohlwelle

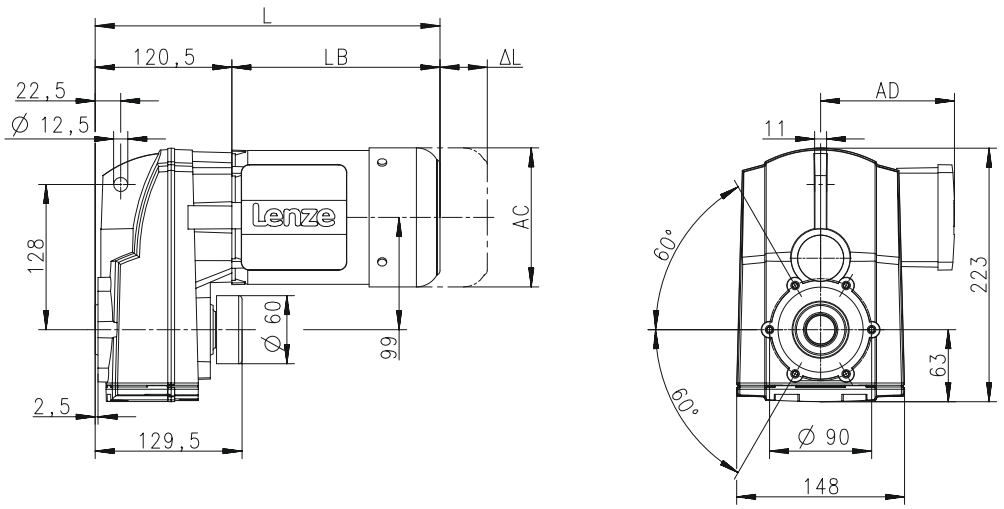

Product Motor

Produkt			MD□MA□□							
			063-12	063-32	063-42	071-32	071-42	080-32	080-42	090-32
Abmessungen										
Gesamtlänge	**L**	**[mm]**		304		324		347		380
Länge Motor	**LB**	**[mm]**		183		203		226		259
Länge Motoranbauten	**Δ L**	**[mm]**		170		165		183		181
Motordurchmesser	**AC**	**[mm]**		123		139		156		176
Abstand Motor/Anschluss	**AD**	**[mm]**		100		109		150		157

Distance of motor centre to the end of terminal box

Total length of the drive without built-on accessories

Motor diameter

Motor length without built-on accessories

Additional length of the built-on accessories (longest version)

6.5



Dimensions, 4-pole motors

g500-S130

Dimensions with hollow shaft

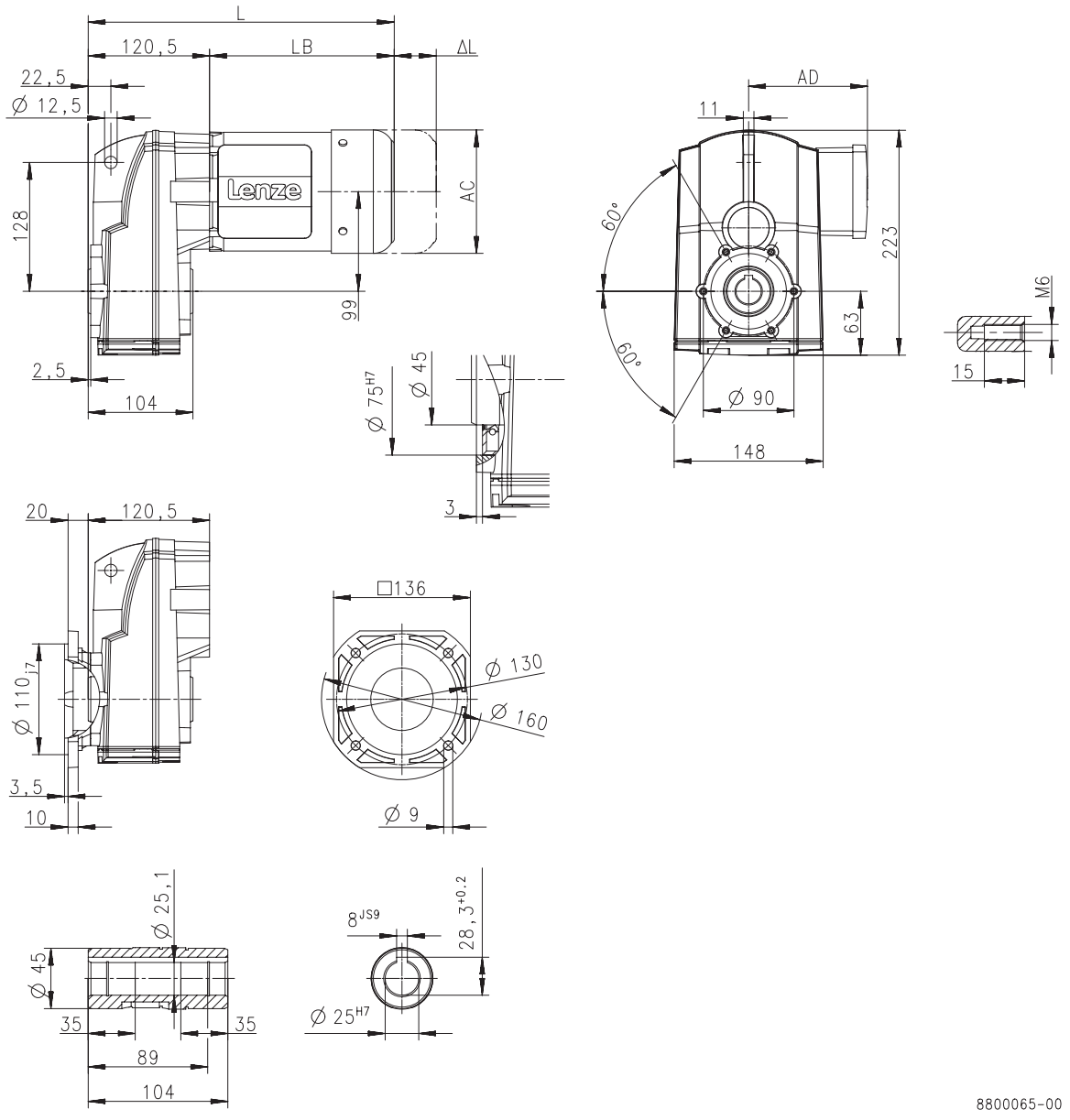

Product			MD□MA□□					MH□MA□□		
			063-12	063-32	063-42	071-32	071-42	080-32	090-12	090-32
Dimensions										
Total length	**L**	**[mm]**	304			324		347	406	
Motor length	**LB**	**[mm]**	183			203		226	285	
Length of motor options	**Δ L**	**[mm]**	170			165		183	181	
Motor diameter	**AC**	**[mm]**	123			139		156	176	
Distance motor/connection	**AD**	**[mm]**	100			109		150	152	157



Dimensions, 4-pole motors

g500-S130

Dimensions with solid shaft

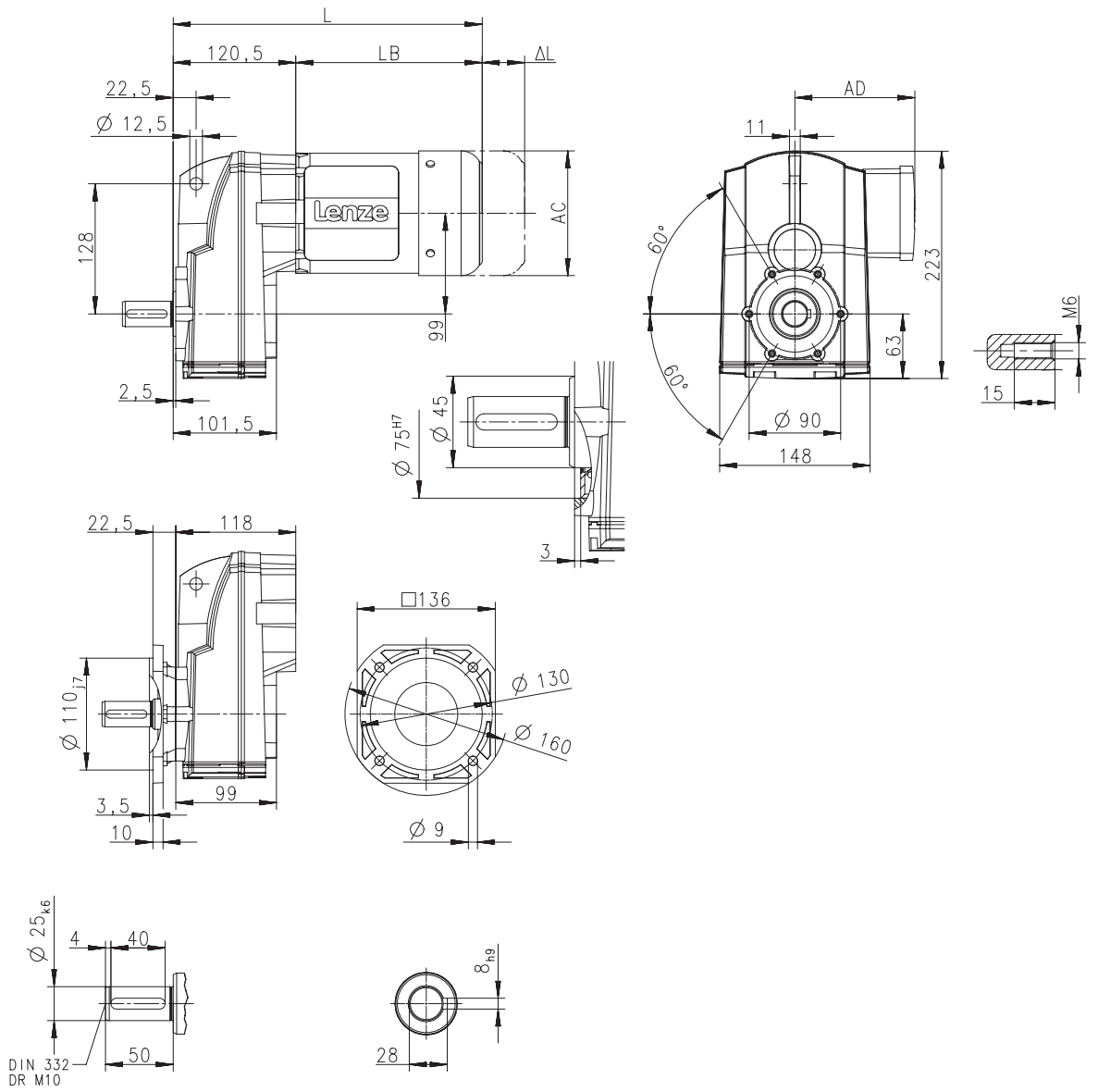

Product			MD□MA□□					MH□MA□□		
			063-12	063-32	063-42	071-32	071-42	080-32	090-12	090-32
Dimensions										
Total length	**L**	**[mm]**	304			324		347	406	
Motor length	**LB**	**[mm]**	183			203		226	285	
Length of motor options	**Δ L**	**[mm]**	170			165		183	181	
Motor diameter	**AC**	**[mm]**	123			139		156	176	
Distance motor/connection	**AD**	**[mm]**	100			109		150	152	157



Dimensions, 4-pole motors

g500-S130

Dimensions with solid shaft and foot

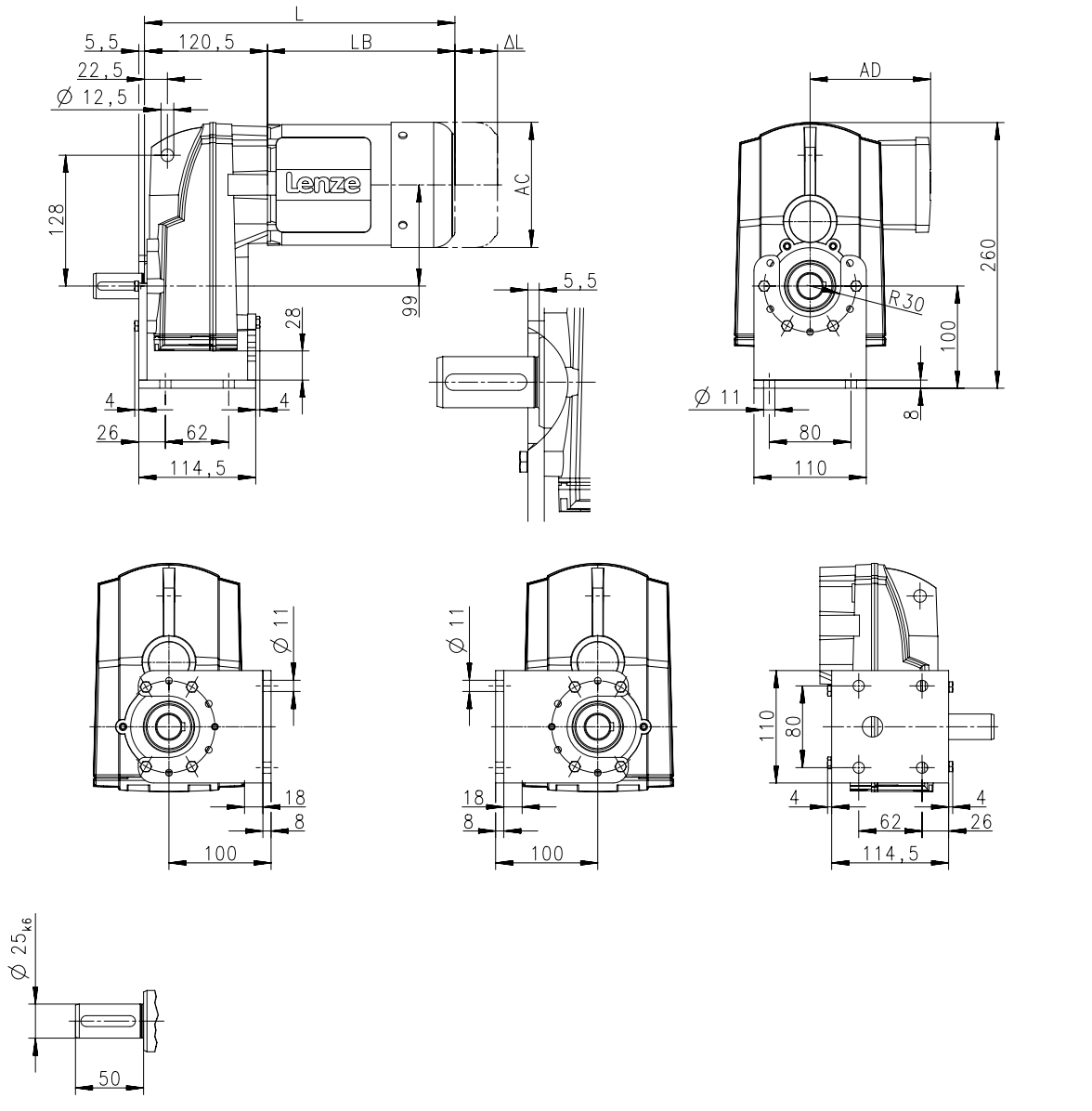

Product			MD□MA□□					MH□MA□□		
			063-12	063-32	063-42	071-32	071-42	080-32	090-12	090-32
Dimensions										
Total length	**L**	**[mm]**	304			324		347	406	
Motor length	**LB**	**[mm]**	183			203		226	285	
Length of motor options	**Δ L**	**[mm]**	170			165		183	181	
Motor diameter	**AC**	**[mm]**	123			139		156	176	
Distance motor/connection	**AD**	**[mm]**	100			109		150	152	157



Dimensions, 4-pole motors

g500-S130

Dimensions with shrink disc

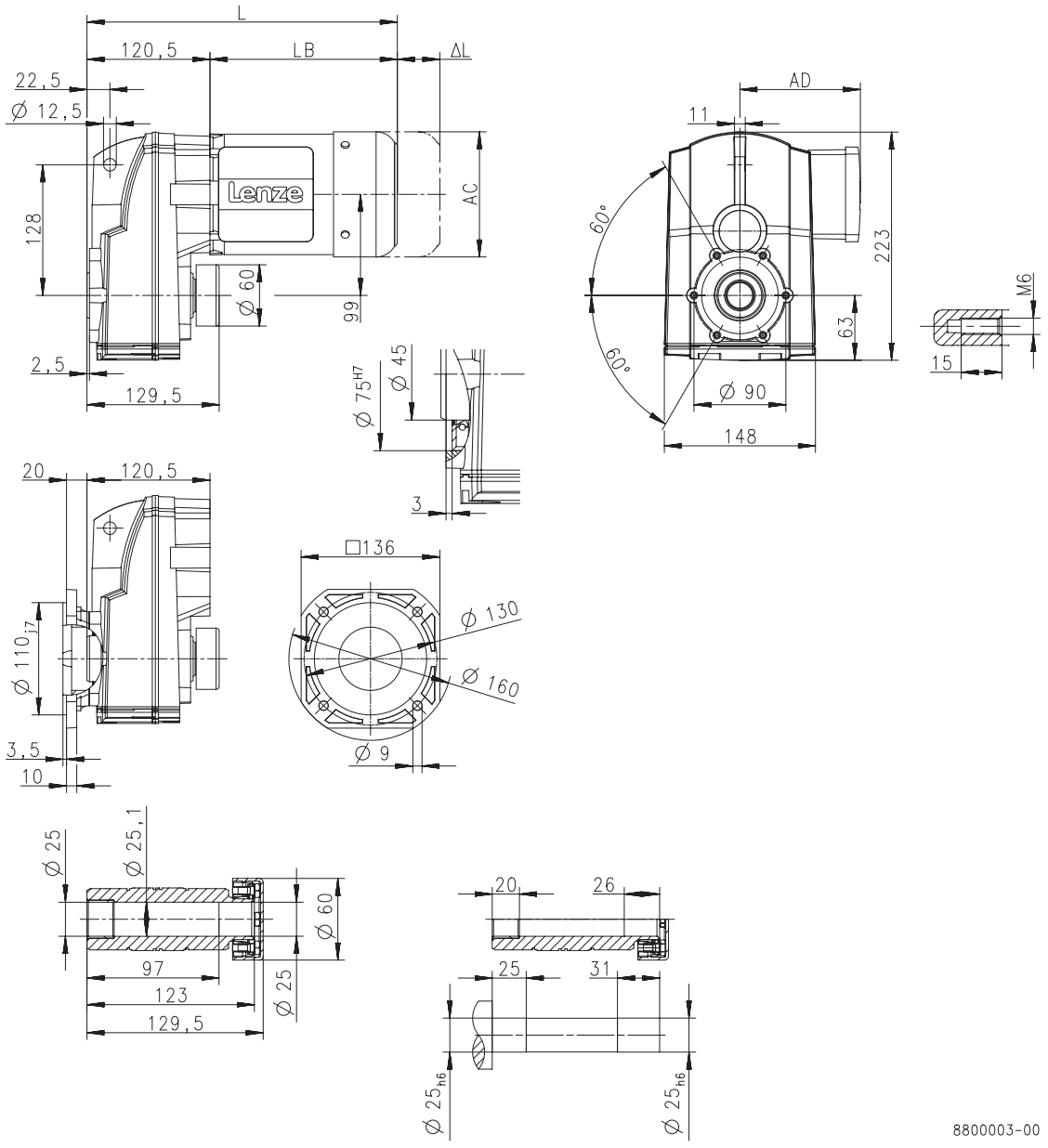

Product			MD□MA□□					MH□MA□□		
			063-12	063-32	063-42	071-32	071-42	080-32	090-12	090-32
Dimensions										
Total length	**L**	**[mm]**	304			324		347	406	
Motor length	**LB**	**[mm]**	183			203		226	285	
Length of motor options	**Δ L**	**[mm]**	170			165		183	181	
Motor diameter	**AC**	**[mm]**	123			139		156	176	
Distance motor/connection	**AD**	**[mm]**	100			109		150	152	157



Dimensions, 4-pole motors

g500-S220

Dimensions with hollow shaft

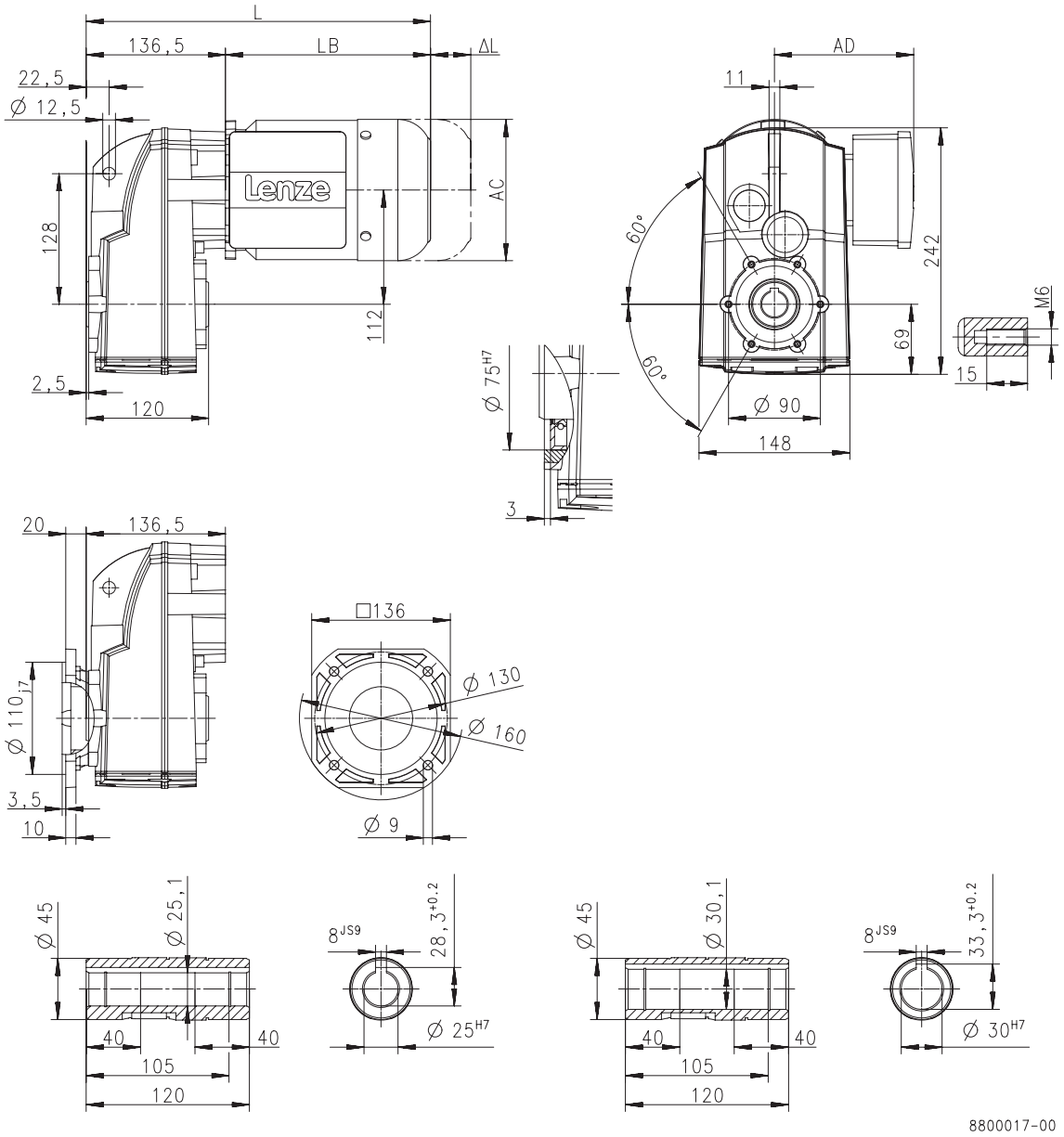

Product			MD□MA□□					MH□MA□□				
			063-12	063-32	063-42	071-32	071-42	080-32	090-12	090-32	100-12	100-32
Dimensions												
Total length	**L**	**[mm]**	320			340		363	422		458	474
Motor length	**LB**	**[mm]**	183			203		226	285		321	337
Length of motor options	**Δ L**	**[mm]**	170			165		183	181		170	
Motor diameter	**AC**	**[mm]**	123			139		156	176		194	
Distance motor/connection	**AD**	**[mm]**	100			109		150	152	157	166	



Dimensions, 4-pole motors

g500-S220

Dimensions with solid shaft

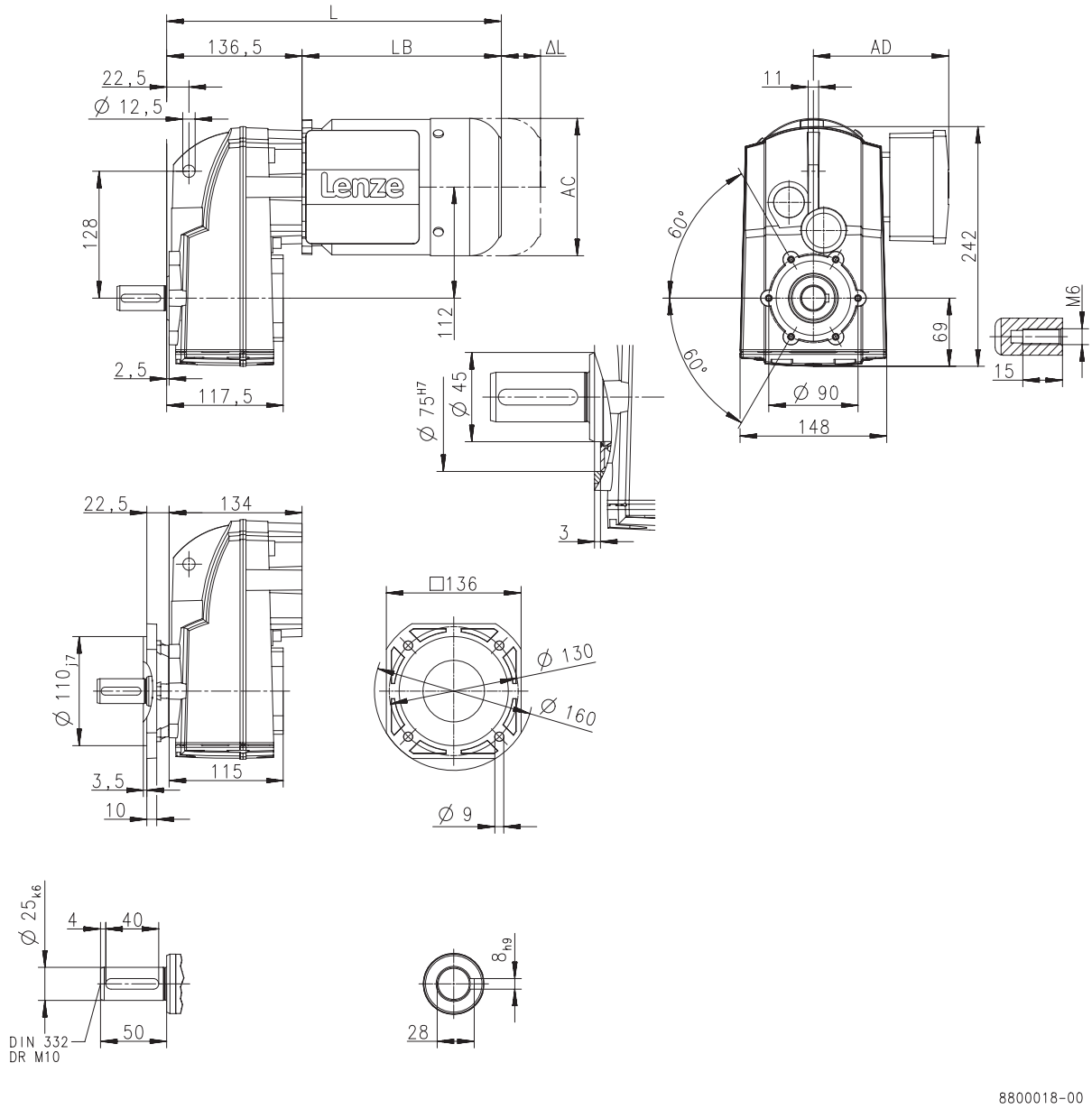

Product			MD□MA□□					MH□MA□□				
			063-12	063-32	063-42	071-32	071-42	080-32	090-12	090-32	100-12	100-32
Dimensions												
Total length	**L**	**[mm]**	320			340		363	422		458	474
Motor length	**LB**	**[mm]**	183			203		226	285		321	337
Length of motor options	**Δ L**	**[mm]**	170			165		183	181		170	
Motor diameter	**AC**	**[mm]**	123			139		156	176		194	
Distance motor/connection	**AD**	**[mm]**	100			109		150	152	157	166	



Dimensions, 4-pole motors

g500-S220

Dimensions with solid shaft and foot

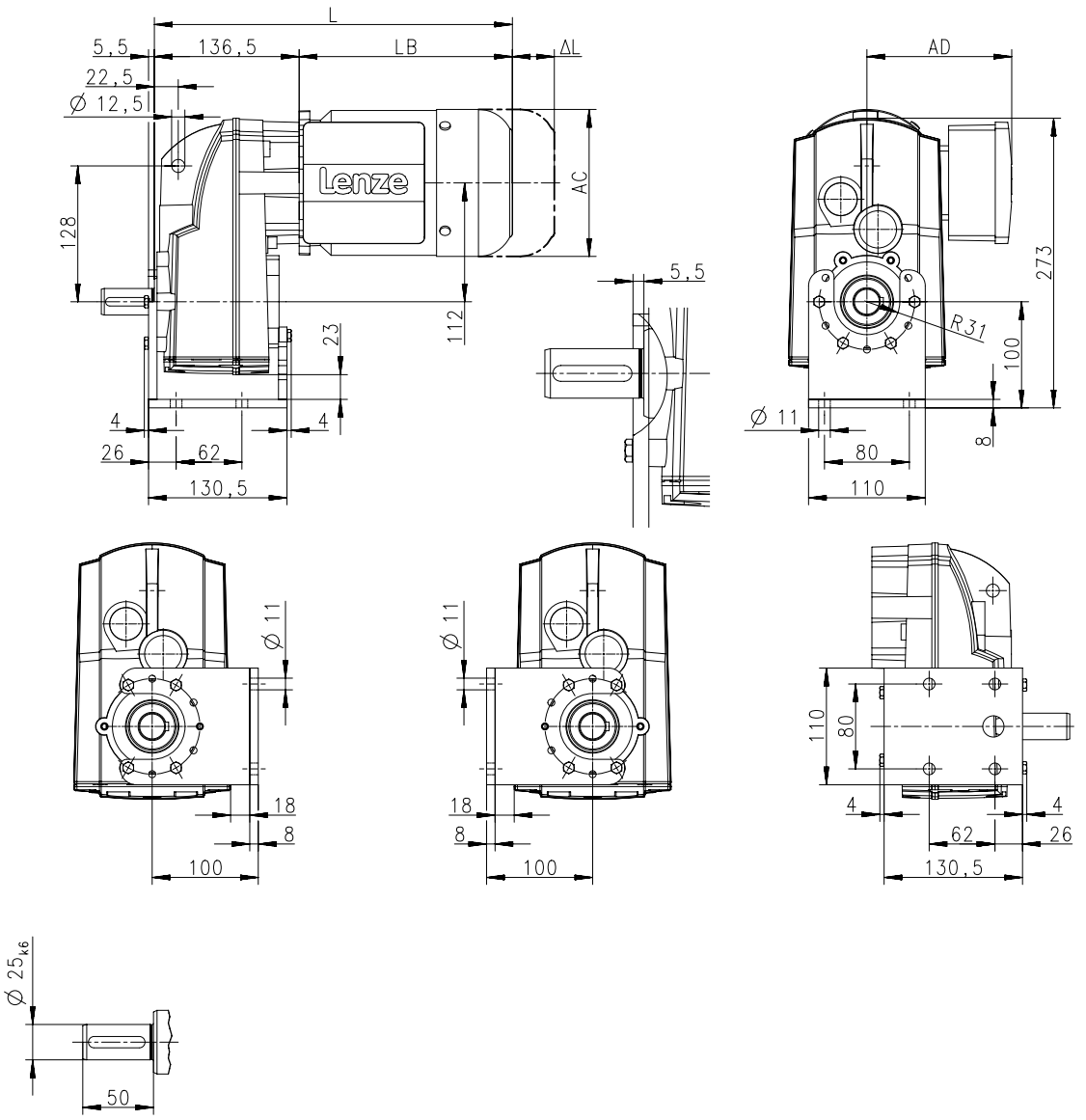

Product			MD□MA□□					MH□MA□□				
			063-12	063-32	063-42	071-32	071-42	080-32	090-12	090-32	100-12	100-32
Dimensions												
Total length	**L**	**[mm]**	320			340		363	422		458	474
Motor length	**LB**	**[mm]**	183			203		226	285		321	337
Length of motor options	**Δ L**	**[mm]**	170			165		183	181		170	
Motor diameter	**AC**	**[mm]**	123			139		156	176		194	
Distance motor/connection	**AD**	**[mm]**	100			109		150	152	157	166	



Dimensions, 4-pole motors

g500-S220

Dimensions with shrink disc

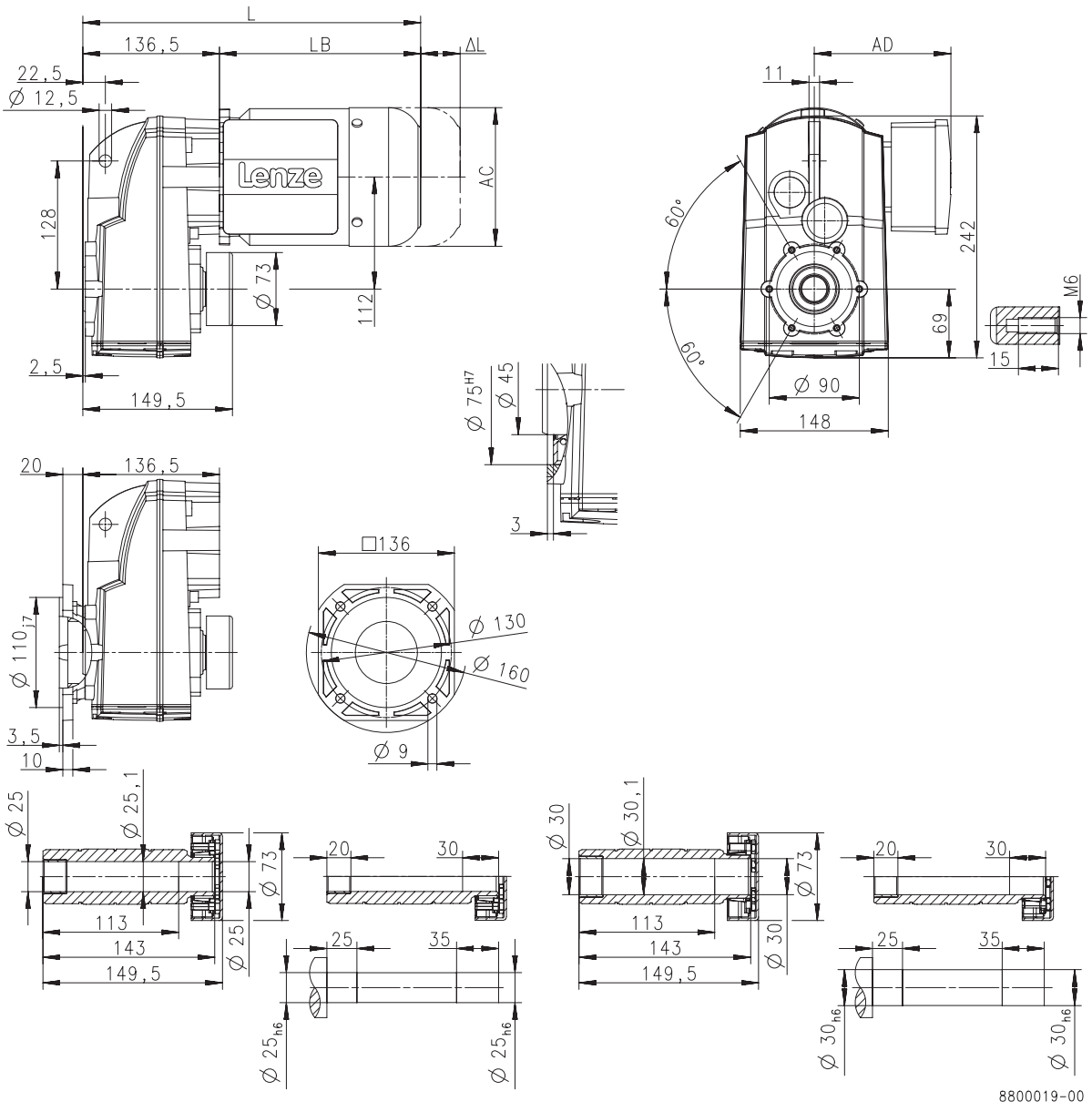

Product			MD□MA□□					MH□MA□□				
			063-12	063-32	063-42	071-32	071-42	080-32	090-12	090-32	100-12	100-32
Dimensions												
Total length	**L**	**[mm]**	320			340		363	422		458	474
Motor length	**LB**	**[mm]**	183			203		226	285		321	337
Length of motor options	**Δ L**	**[mm]**	170			165		183	181		170	
Motor diameter	**AC**	**[mm]**	123			139		156	176		194	
Distance motor/connection	**AD**	**[mm]**	100			109		150	152	157	166	



Dimensions, 4-pole motors

g500-S400

Dimensions with hollow shaft

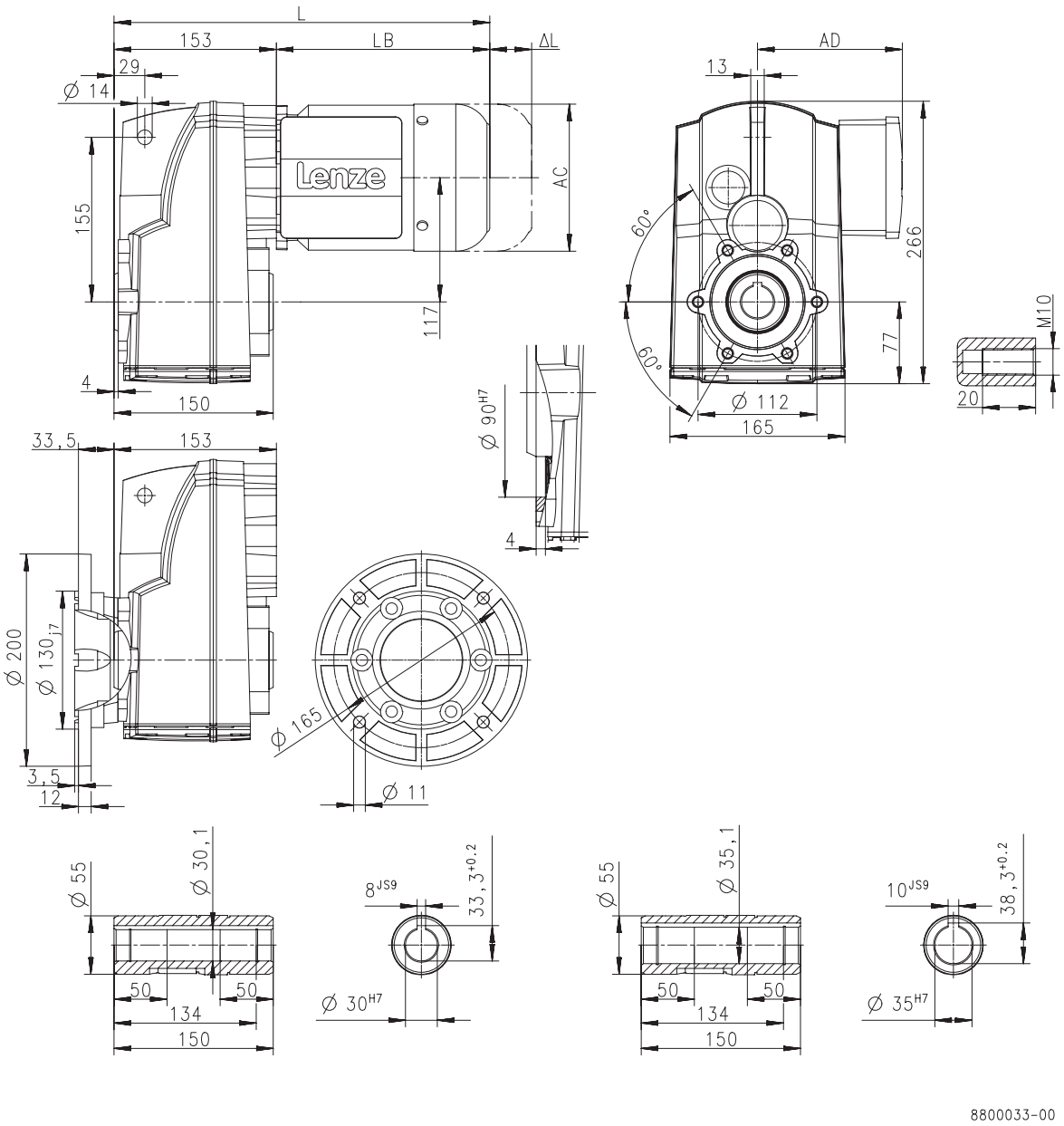

Product			MD□MA□□					MH□MA□□					
			063-12	063-32	063-42	071-32	071-42	080-32	090-12	090-32	100-12	100-32	112-22
Dimensions													
Total length	**L**	**[mm]**	336			356		379	438		474	490	533
Motor length	**LB**	**[mm]**	183			203		226	285		321	337	380
Length of motor options	**Δ L**	**[mm]**	170			165		183	181		170		183
Motor diameter	**AC**	**[mm]**	123			139		156	176		194		218
Distance motor/connection	**AD**	**[mm]**	100			109		150	152	157	166		176



Dimensions, 4-pole motors

g500-S400

Dimensions with solid shaft

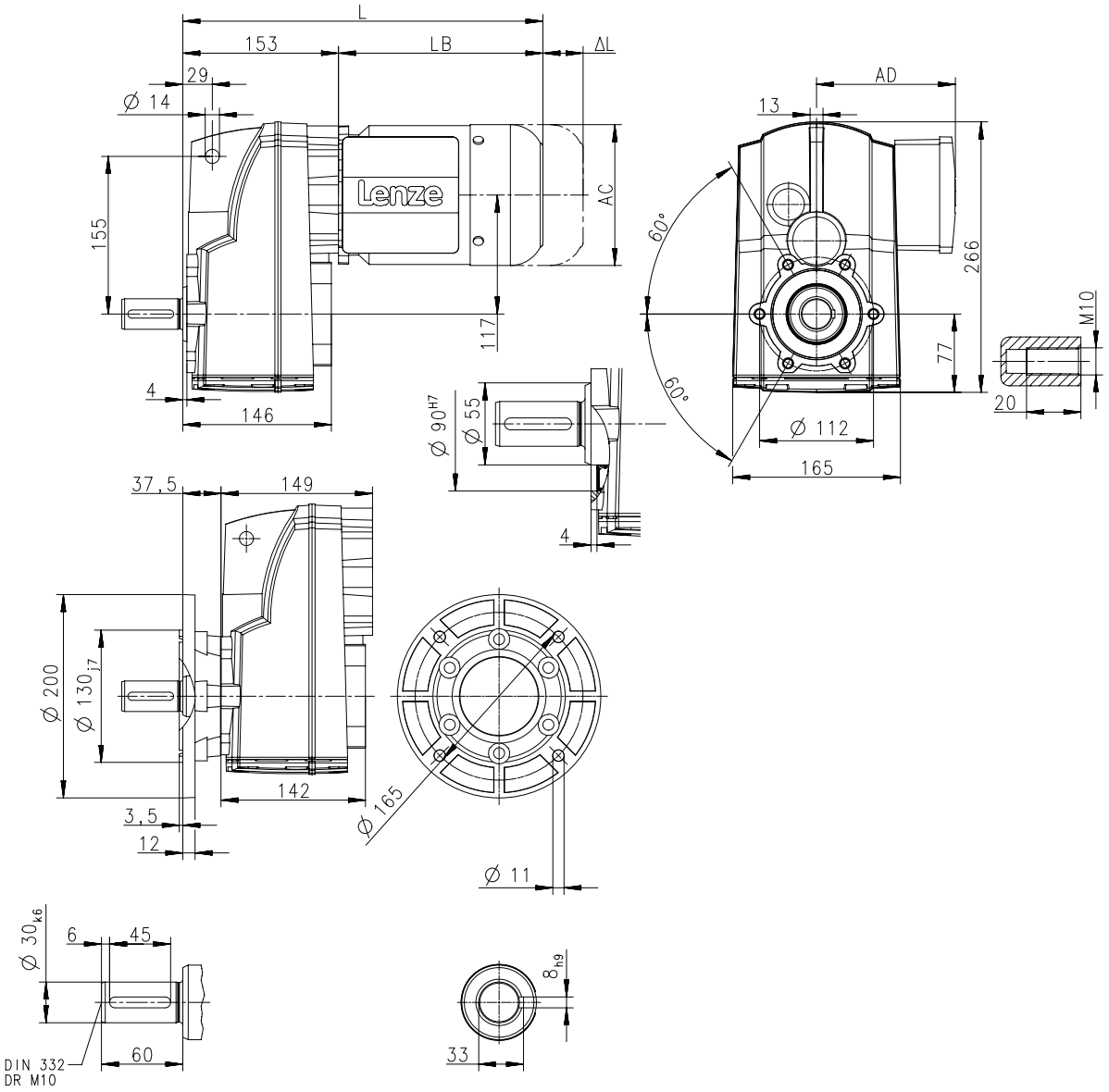

Product			MD□MA□□					MH□MA□□					
			063-12	063-32	063-42	071-32	071-42	080-32	090-12	090-32	100-12	100-32	112-22
Dimensions													
Total length	**L**	**[mm]**	336			356		379	438		474	490	533
Motor length	**LB**	**[mm]**	183			203		226	285		321	337	380
Length of motor options	**Δ L**	**[mm]**	170			165		183	181		170		183
Motor diameter	**AC**	**[mm]**	123			139		156	176		194		218
Distance motor/connection	**AD**	**[mm]**	100			109		150	152	157	166		176



Dimensions, 4-pole motors

g500-S400

Dimensions with solid shaft and foot

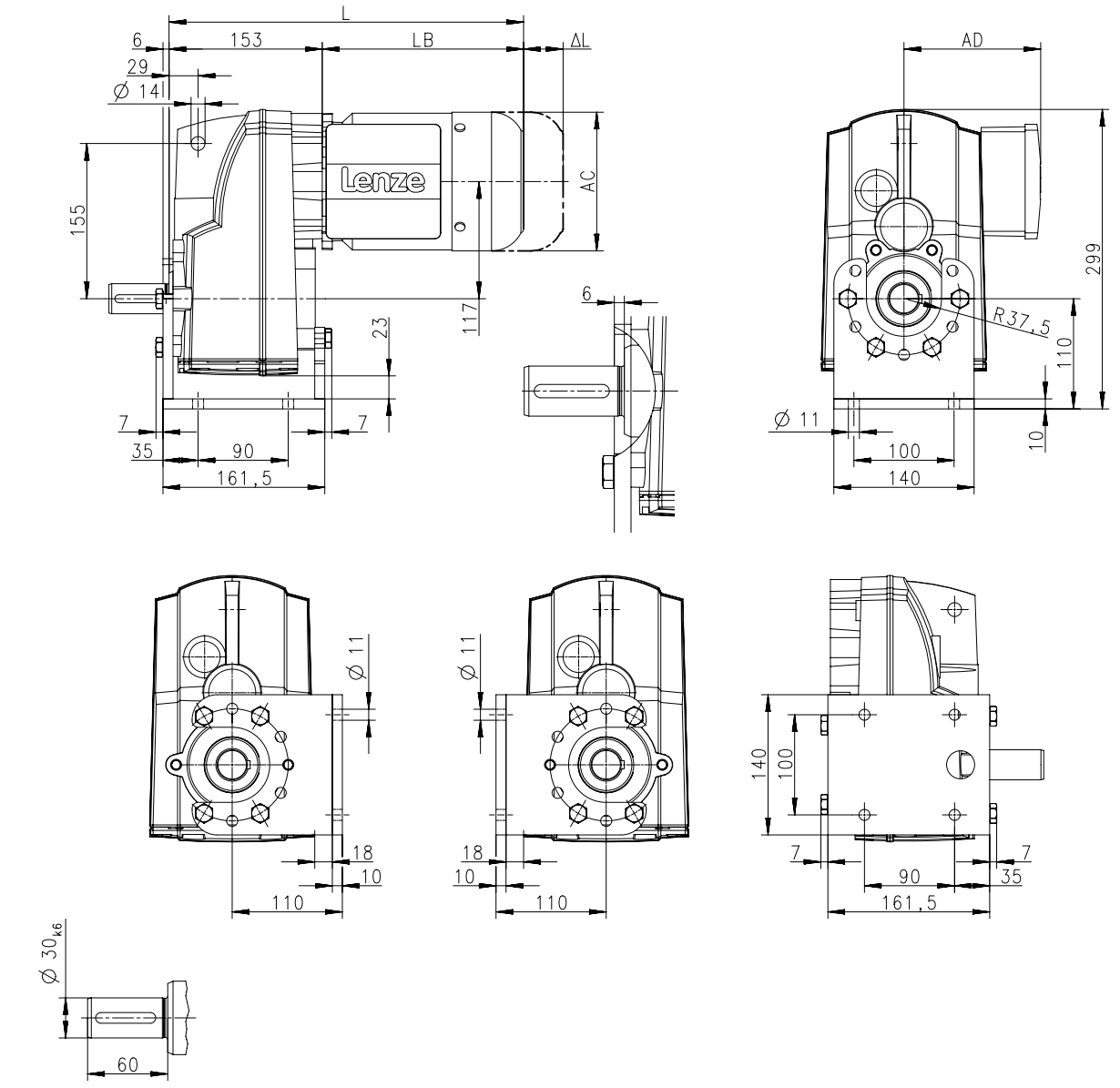

Product			MD□MA□□					MH□MA□□					
			063-12	063-32	063-42	071-32	071-42	080-32	090-12	090-32	100-12	100-32	112-22
Dimensions													
Total length	**L**	**[mm]**	336			356		379	438		474	490	533
Motor length	**LB**	**[mm]**	183			203		226	285		321	337	380
Length of motor options	**Δ L**	**[mm]**	170			165		183	181		170		183
Motor diameter	**AC**	**[mm]**	123			139		156	176		194		218
Distance motor/connection	**AD**	**[mm]**	100			109		150	152	157	166		176



Dimensions, 4-pole motors

g500-S400

Dimensions with shrink disc

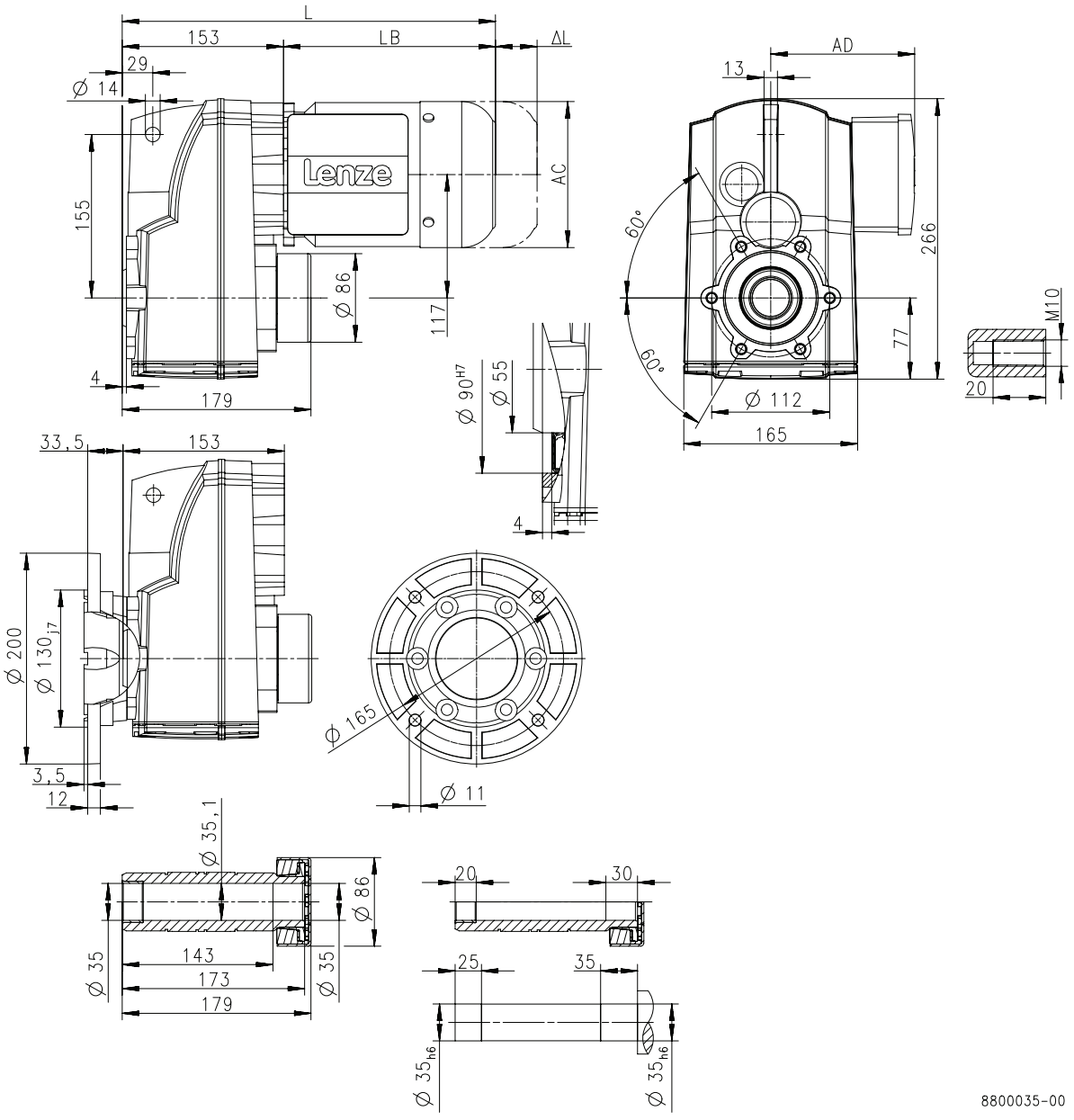

Product			MD□MA□□					MH□MA□□					
			063-12	063-32	063-42	071-32	071-42	080-32	090-12	090-32	100-12	100-32	112-22
Dimensions													
Total length	**L**	**[mm]**	336			356		379	438		474	490	533
Motor length	**LB**	**[mm]**	183			203		226	285		321	337	380
Length of motor options	**Δ L**	**[mm]**	170			165		183	181		170		183
Motor diameter	**AC**	**[mm]**	123			139		156	176		194		218
Distance motor/connection	**AD**	**[mm]**	100			109		150	152	157	166		176



Dimensions, 4-pole motors

g500-S660

Dimensions with hollow shaft

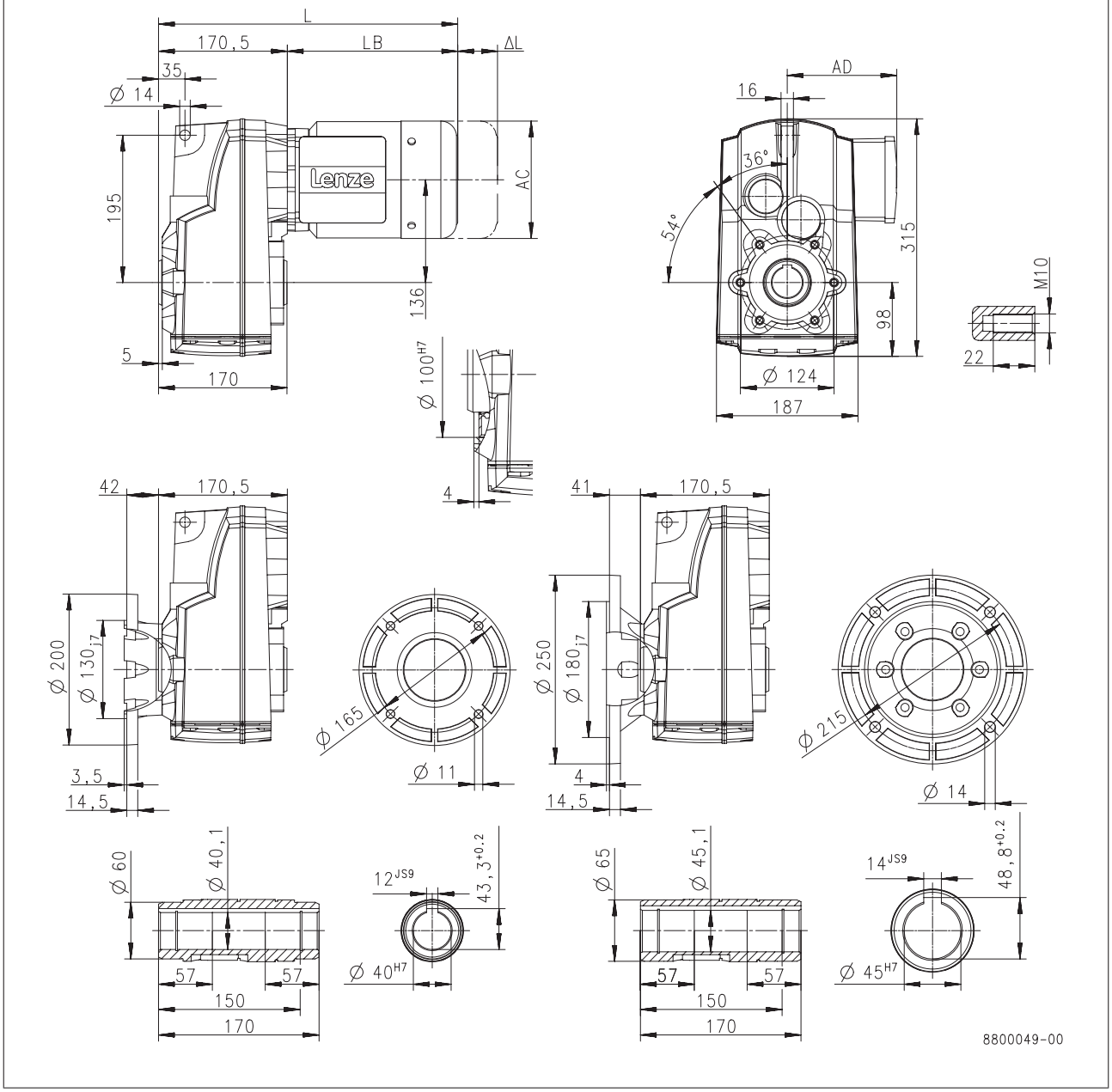

Product			MD□MA□□					MH□MA□□
			063-12	063-32	063-42	071-32	071-42	080-32
Dimensions								
Total length	**L**	**[mm]**	354			374		397
Motor length	**LB**	**[mm]**	183			203		226
Length of motor options	**Δ L**	**[mm]**	170			165		183
Motor diameter	**AC**	**[mm]**	123			139		156
Distance motor/connection	**AD**	**[mm]**	100			109		150



Dimensions, 4-pole motors

g500-S660

Dimensions with hollow shaft

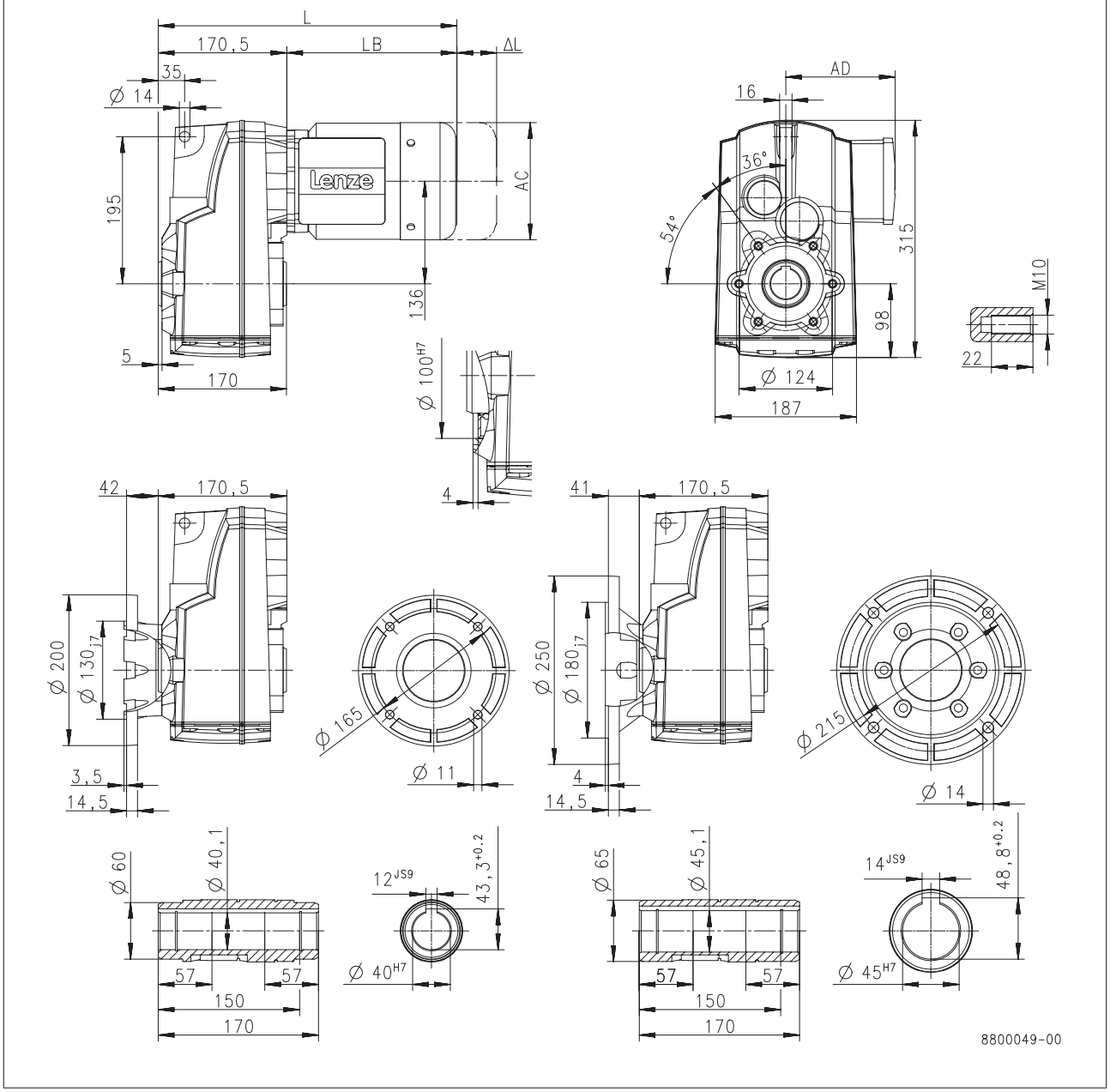

Product			MH□MA□□						
			090-12	090-32	100-12	100-32	112-22	132-12	132-22
Dimensions									
Total length	**L**	**[mm]**	456		492	508	551	599	
Motor length	**LB**	**[mm]**	285		321	337	380	428	
Length of motor options	**Δ L**	**[mm]**	181		170		183	202	
Motor diameter	**AC**	**[mm]**	176		194		218	258	
Distance motor/connection	**AD**	**[mm]**	152	157	166		176	195	



Dimensions, 4-pole motors

g500-S660

Dimensions with solid shaft

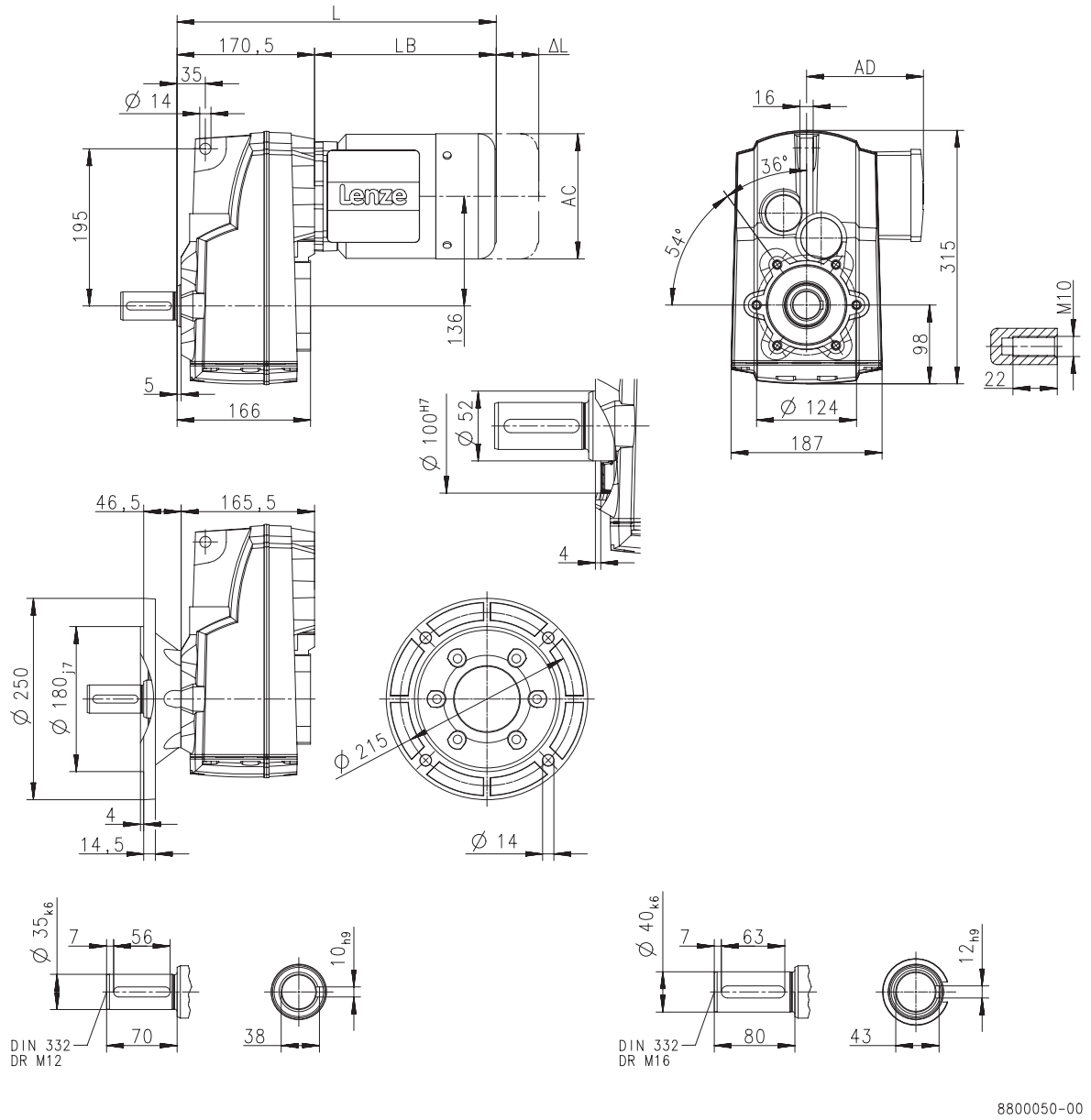

Product			MD□MA□□					MH□MA□□
			063-12	063-32	063-42	071-32	071-42	080-32
Dimensions								
Total length	**L**	**[mm]**	354			374		397
Motor length	**LB**	**[mm]**	183			203		226
Length of motor options	**Δ L**	**[mm]**	170			165		183
Motor diameter	**AC**	**[mm]**	123			139		156
Distance motor/connection	**AD**	**[mm]**	100			109		150



Dimensions, 4-pole motors

g500-S660

Dimensions with solid shaft

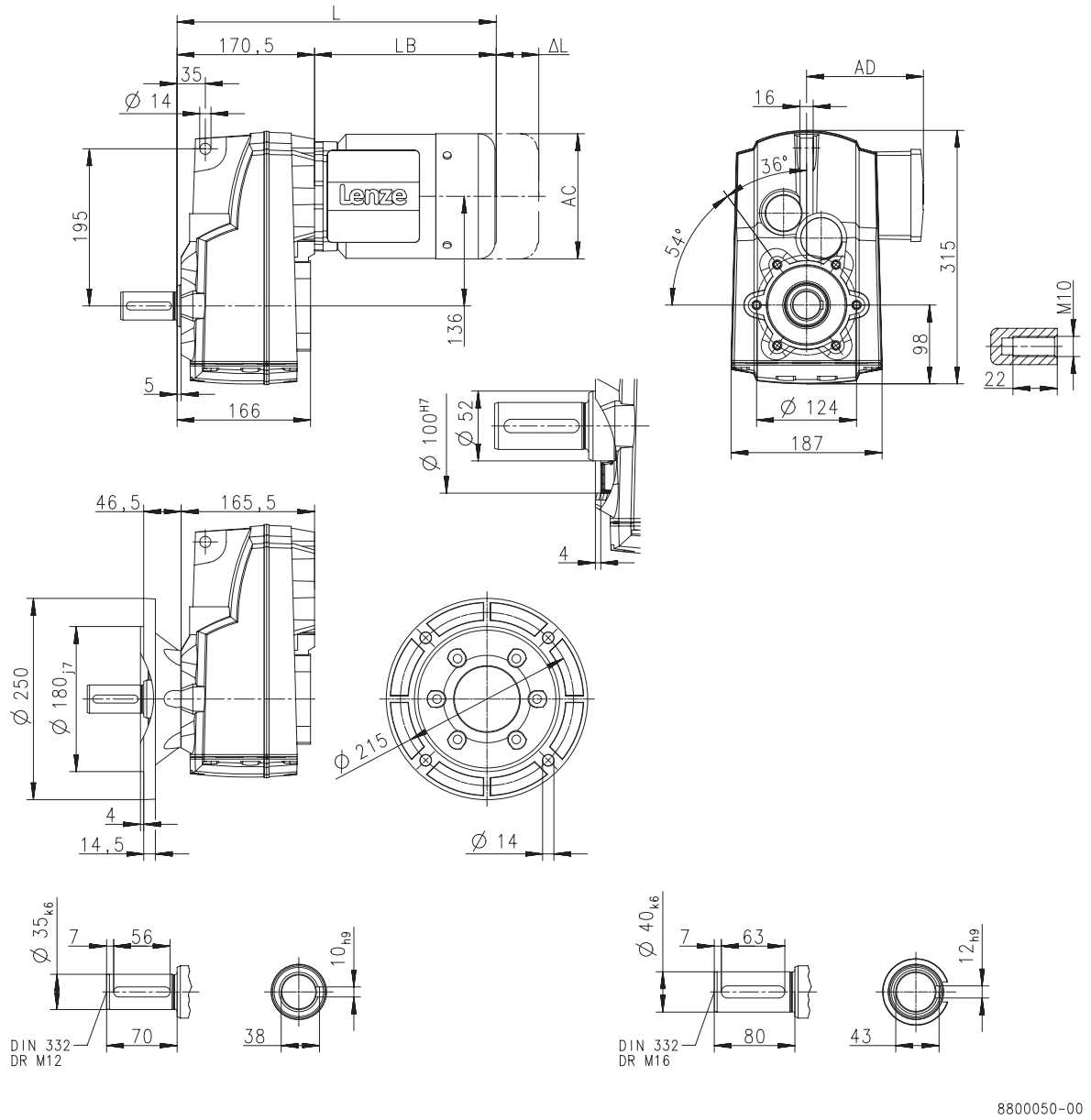

Product			MH□MA□□						
			090-12	090-32	100-12	100-32	112-22	132-12	132-22
Dimensions									
Total length	**L**	**[mm]**	456		492	508	551	599	
Motor length	**LB**	**[mm]**	285		321	337	380	428	
Length of motor options	**Δ L**	**[mm]**	181		170		183	202	
Motor diameter	**AC**	**[mm]**	176		194		218	258	
Distance motor/connection	**AD**	**[mm]**	152	157	166		176	195	



Dimensions, 4-pole motors

g500-S660

Dimensions with solid shaft and foot

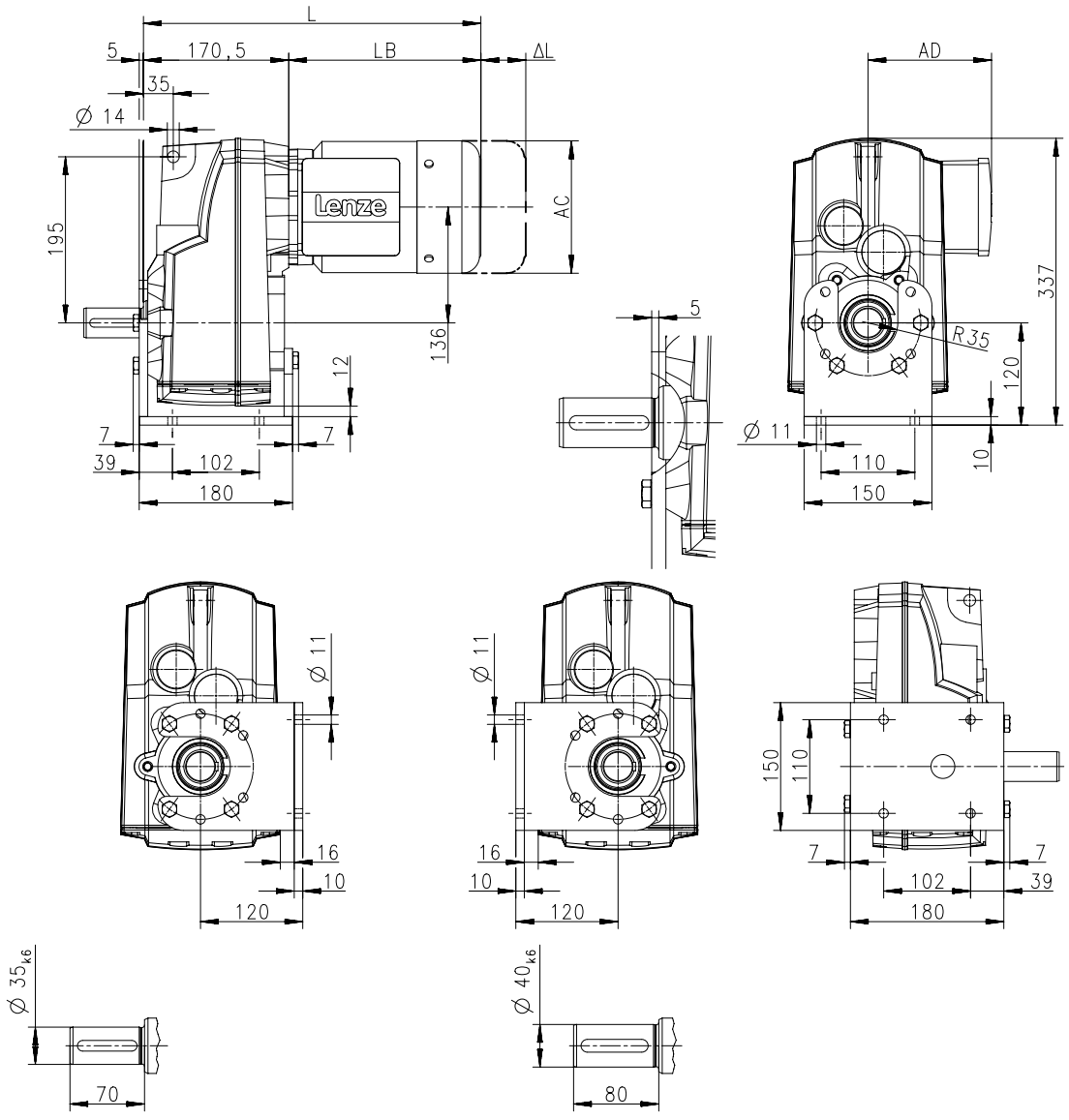

8800052-00

Product			MD□MA□□					MH□MA□□
			063-12	063-32	063-42	071-32	071-42	080-32
Dimensions								
Total length	**L**	**[mm]**	354			374		397
Motor length	**LB**	**[mm]**	183			203		226
Length of motor options	**Δ L**	**[mm]**	170			165		183
Motor diameter	**AC**	**[mm]**	123			139		156
Distance motor/connection	**AD**	**[mm]**	100			109		150



Dimensions, 4-pole motors

g500-S660

Dimensions with solid shaft and foot

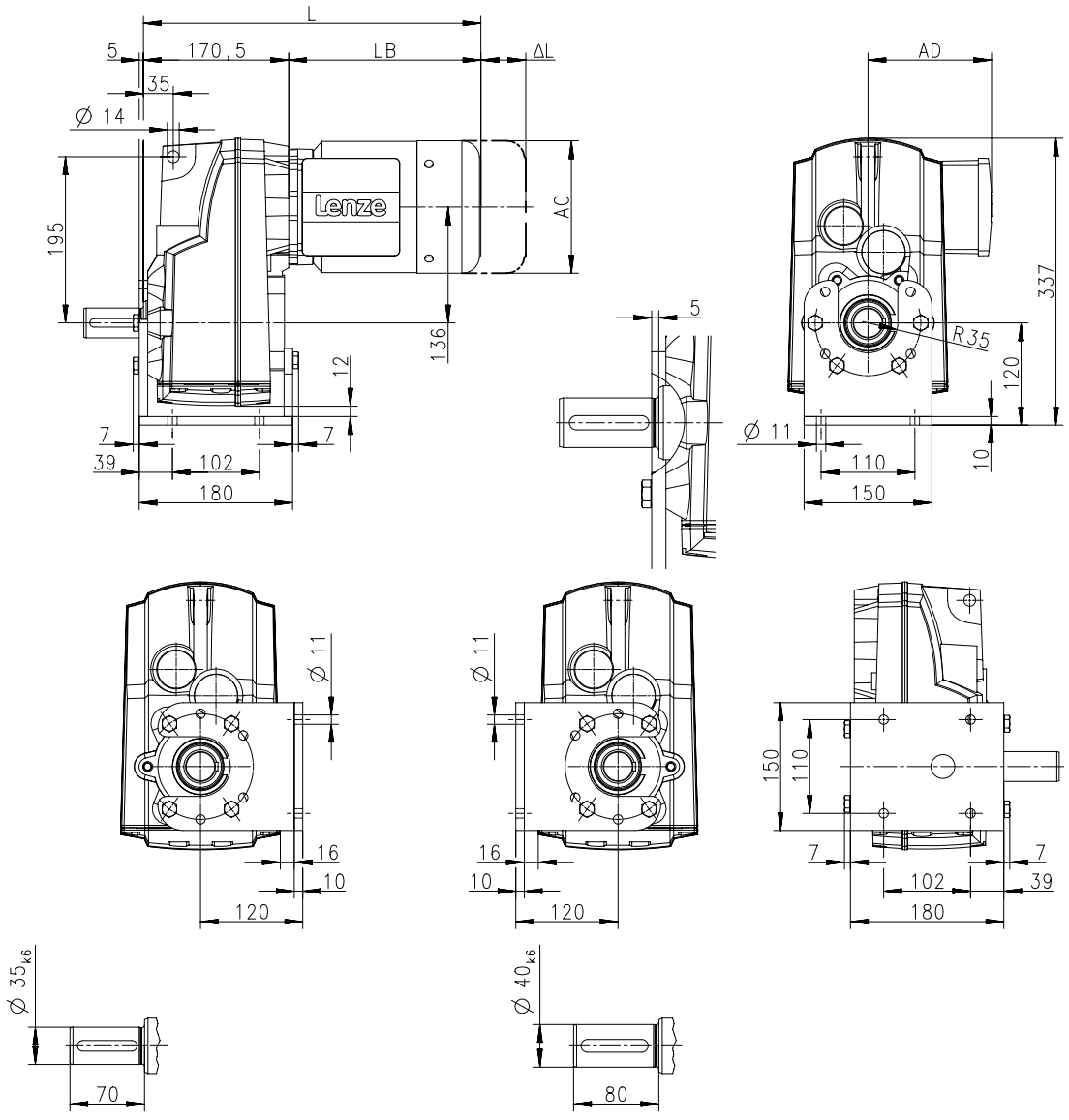

8800052-00

Product			MH□MA□□						
			090-12	090-32	100-12	100-32	112-22	132-12	132-22
Dimensions									
Total length	**L**	**[mm]**	456		492	508	551	599	
Motor length	**LB**	**[mm]**	285		321	337	380	428	
Length of motor options	**Δ L**	**[mm]**	181		170		183	202	
Motor diameter	**AC**	**[mm]**	176		194		218	258	
Distance motor/connection	**AD**	**[mm]**	152	157	166		176	195	



Dimensions, 4-pole motors

g500-S660

Dimensions with shrink disc

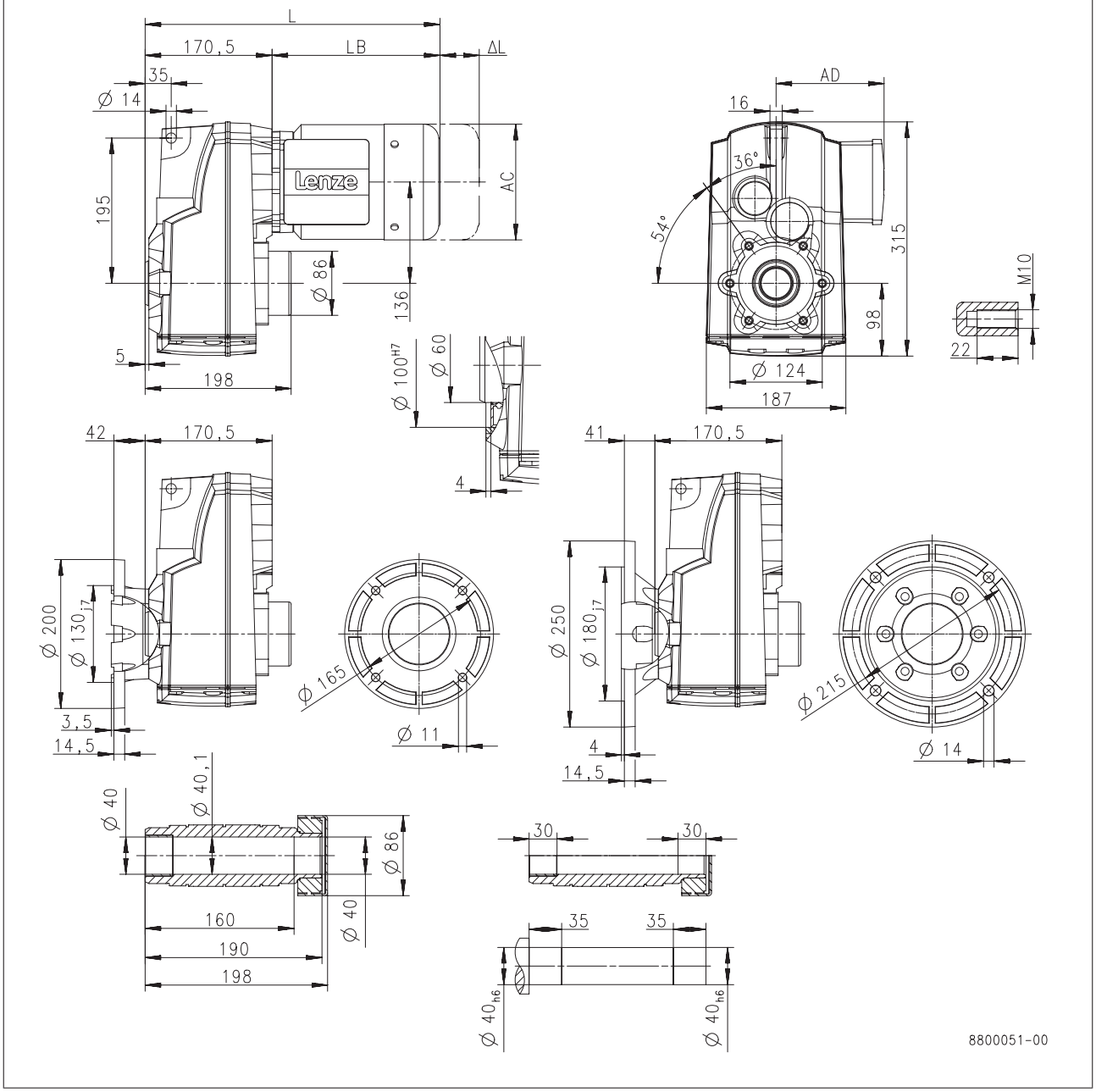

Product			MD□MA□□					MH□MA□□
			063-12	063-32	063-42	071-32	071-42	080-32
Dimensions								
Total length	**L**	**[mm]**	354			374		397
Motor length	**LB**	**[mm]**	183			203		226
Length of motor options	**Δ L**	**[mm]**	170			165		183
Motor diameter	**AC**	**[mm]**	123			139		156
Distance motor/connection	**AD**	**[mm]**	100			109		150



Dimensions, 4-pole motors

g500-S660

Dimensions with shrink disc

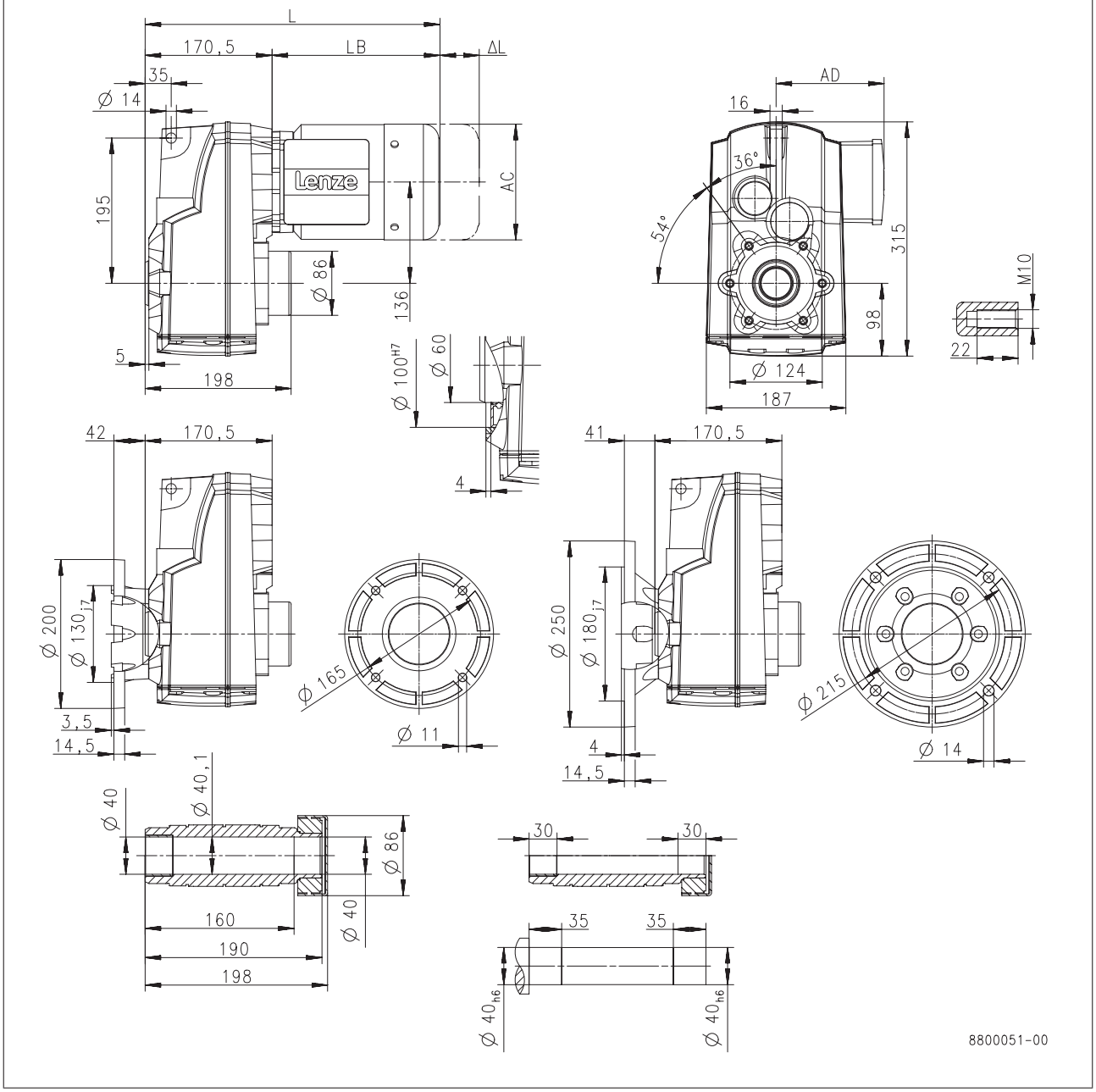

Product			MH□MA□□						
			090-12	090-32	100-12	100-32	112-22	132-12	132-22
Dimensions									
Total length	**L**	**[mm]**	456		492	508	551	599	
Motor length	**LB**	**[mm]**	285		321	337	380	428	
Length of motor options	**Δ L**	**[mm]**	181		170		183	202	
Motor diameter	**AC**	**[mm]**	176		194		218	258	
Distance motor/connection	**AD**	**[mm]**	152	157	166		176	195	



Dimensions, 2-pole motors

g500-S130

Dimensions with hollow shaft

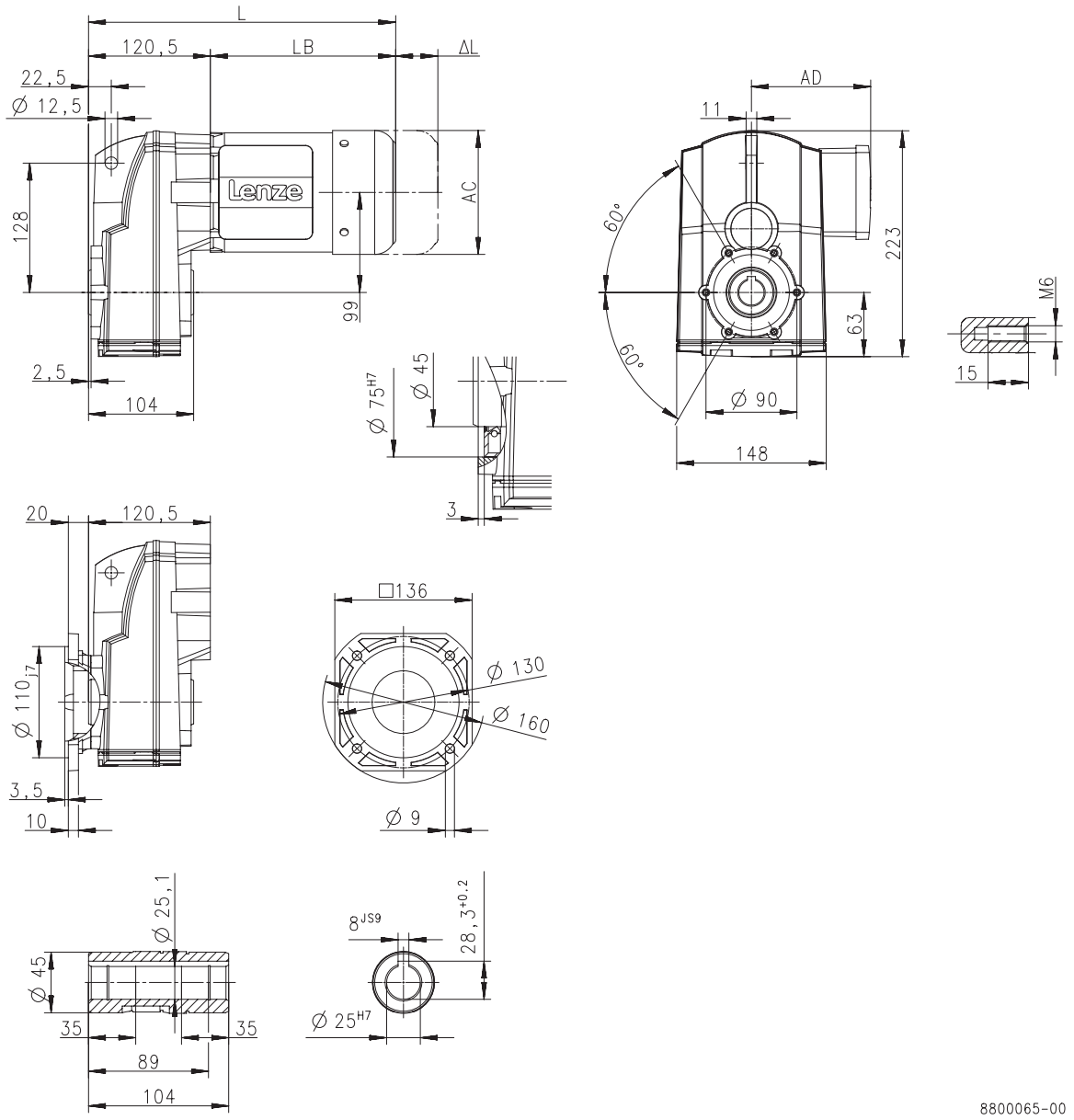

Product			MD□MA□□			
			063-11	063-31	071-11	071-31
Dimensions						
Total length	**L**	**[mm]**	304		324	
Motor length	**LB**	**[mm]**	183		203	
Length of motor options	**Δ L**	**[mm]**	170		165	
Motor diameter	**AC**	**[mm]**	123		139	
Distance motor/connection	**AD**	**[mm]**	100		109	



Dimensions, 2-pole motors

g500-S130

Dimensions with solid shaft

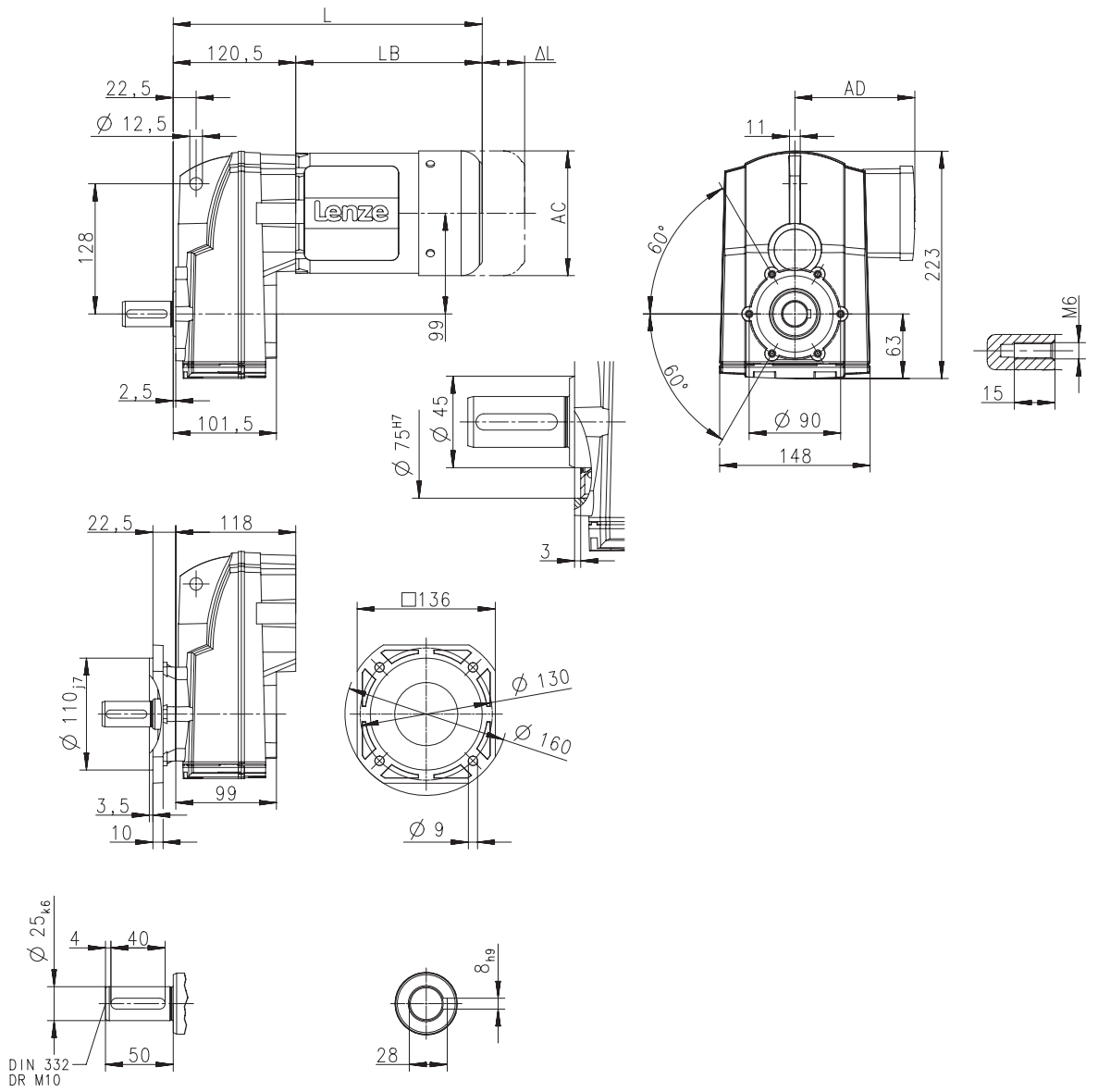

Product			MD□MA□□			
			063-11	063-31	071-11	071-31
Dimensions						
Total length	**L**	**[mm]**	304		324	
Motor length	**LB**	**[mm]**	183		203	
Length of motor options	**Δ L**	**[mm]**	170		165	
Motor diameter	**AC**	**[mm]**	123		139	
Distance motor/connection	**AD**	**[mm]**	100		109	



Dimensions, 2-pole motors

g500-S130

Dimensions with solid shaft and foot

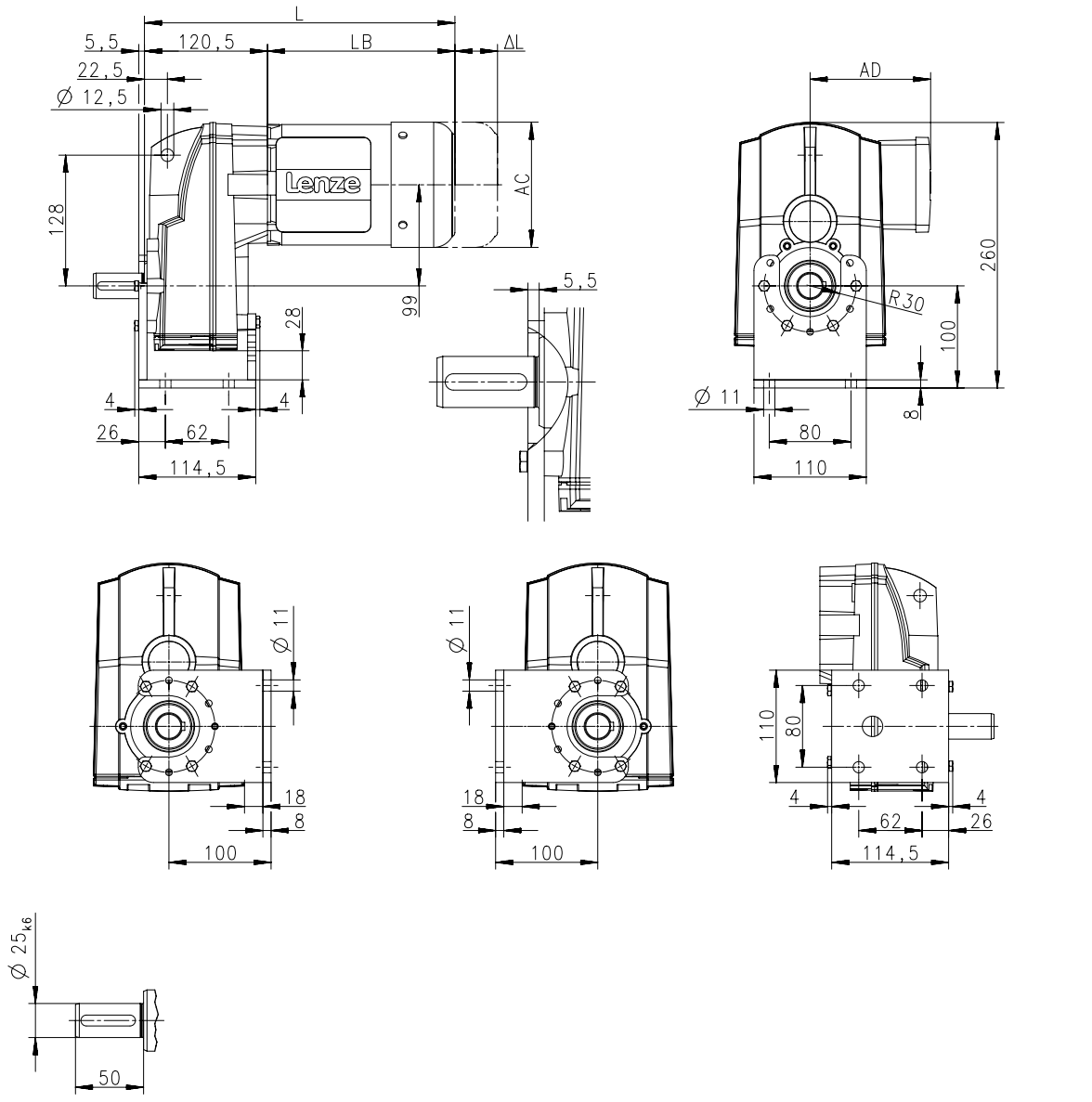

Product			MD□MA□□			
			063-11	063-31	071-11	071-31
Dimensions						
Total length	**L**	**[mm]**	304		324	
Motor length	**LB**	**[mm]**	183		203	
Length of motor options	**Δ L**	**[mm]**	170		165	
Motor diameter	**AC**	**[mm]**	123		139	
Distance motor/connection	**AD**	**[mm]**	100		109	



Dimensions, 2-pole motors

g500-S130

Dimensions with shrink disc

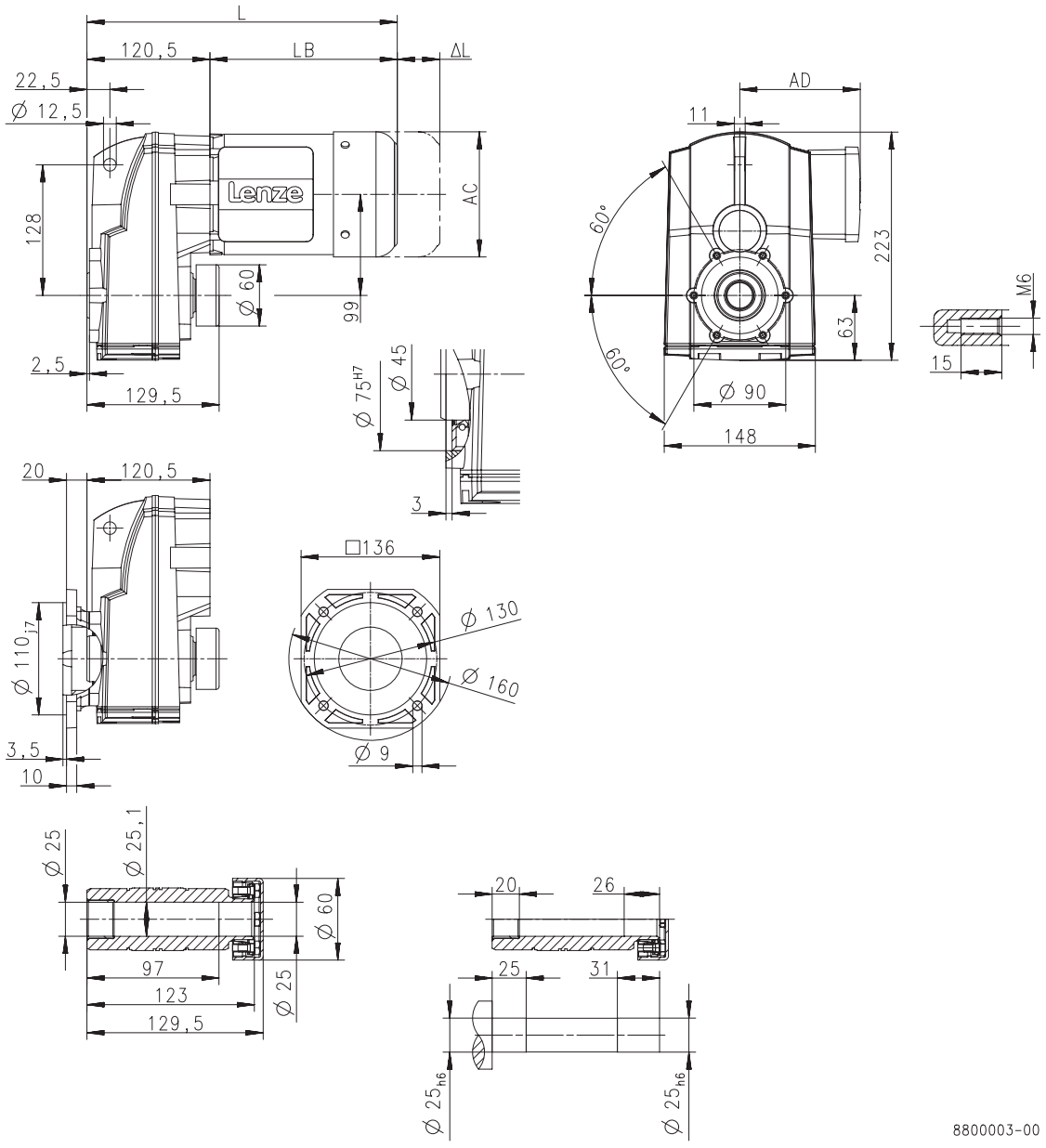

Product			MD□MA□□			
			063-11	063-31	071-11	071-31
Dimensions						
Total length	**L**	**[mm]**	304		324	
Motor length	**LB**	**[mm]**	183		203	
Length of motor options	**Δ L**	**[mm]**	170		165	
Motor diameter	**AC**	**[mm]**	123		139	
Distance motor/connection	**AD**	**[mm]**	100		109	



Dimensions, 2-pole motors

g500-S220

Dimensions with hollow shaft

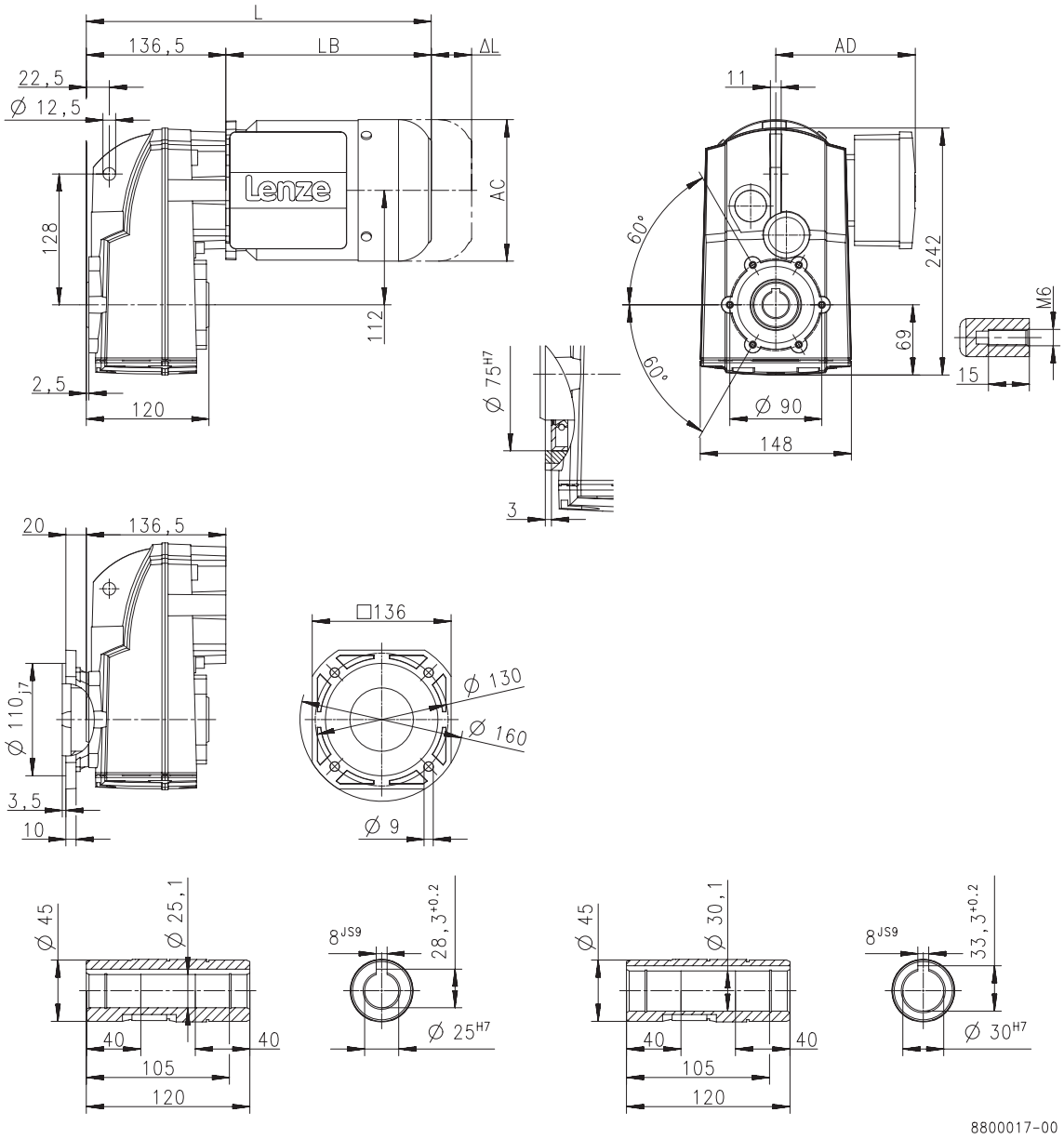

Product			MD□MA□□		
			063-31	071-11	071-31
Dimensions					
Total length	**L**	**[mm]**	320	340	
Motor length	**LB**	**[mm]**	183	203	
Length of motor options	**Δ L**	**[mm]**	170	165	
Motor diameter	**AC**	**[mm]**	123	139	
Distance motor/connection	**AD**	**[mm]**	100	109	



Dimensions, 2-pole motors

g500-S220

Dimensions with solid shaft

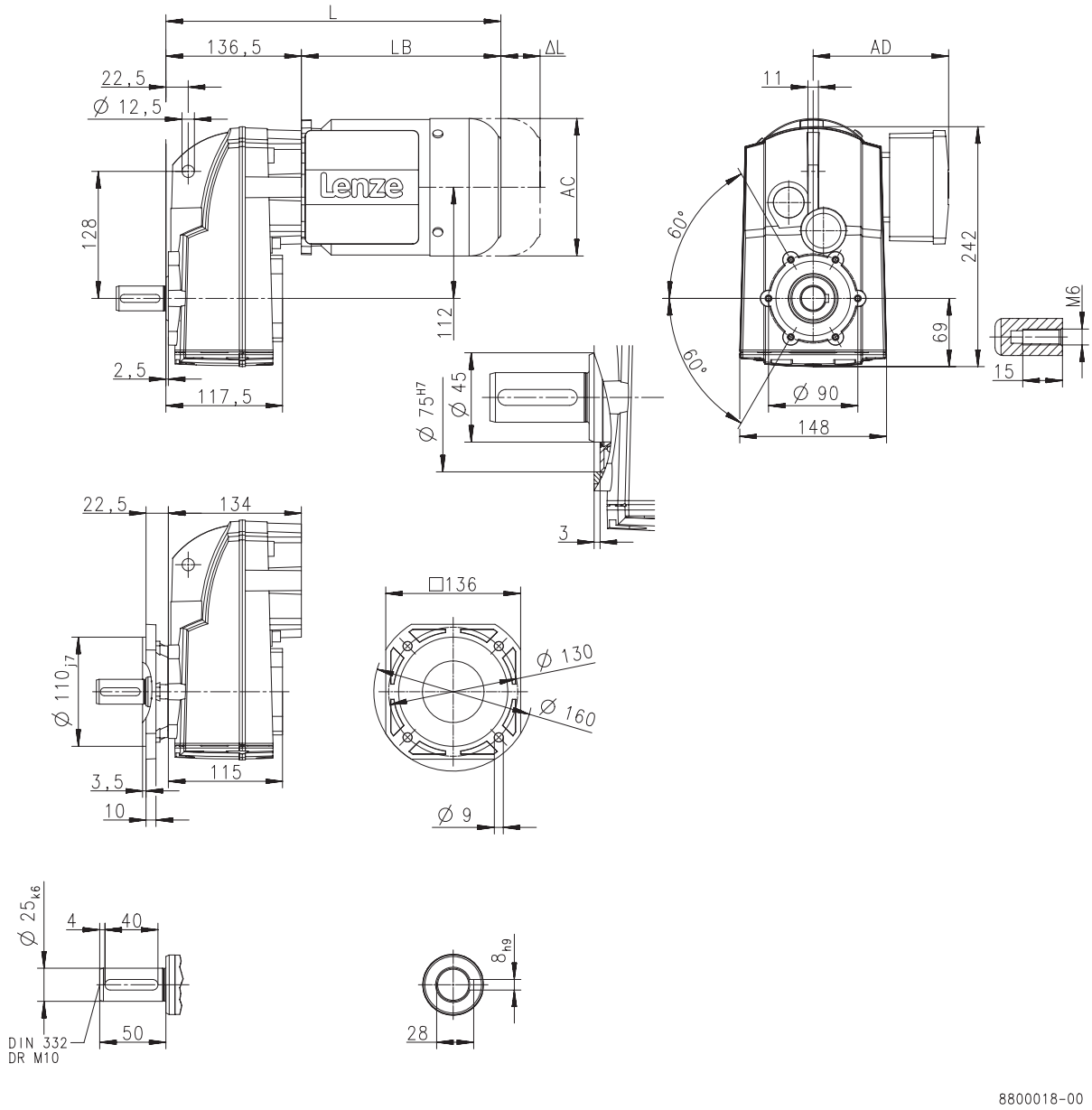

Product			MD□MA□□		
			063-31	071-11	071-31
Dimensions					
Total length	**L**	**[mm]**	320	340	
Motor length	**LB**	**[mm]**	183	203	
Length of motor options	**Δ L**	**[mm]**	170	165	
Motor diameter	**AC**	**[mm]**	123	139	
Distance motor/connection	**AD**	**[mm]**	100	109	



Dimensions, 2-pole motors

g500-S220

Dimensions with solid shaft and foot

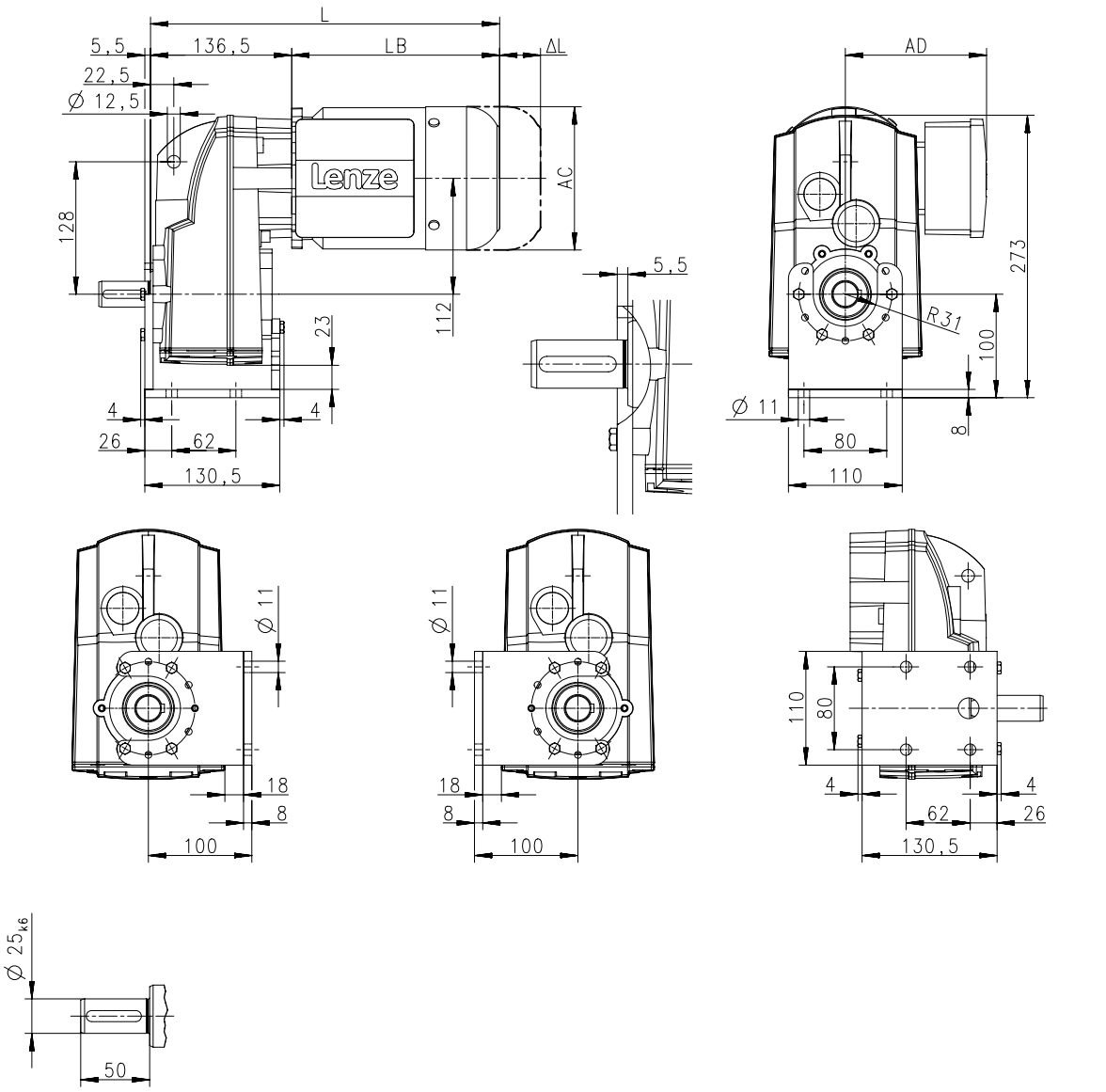

Product			MD□MA□□		
			063-31	071-11	071-31
Dimensions					
Total length	**L**	**[mm]**	320	340	
Motor length	**LB**	**[mm]**	183	203	
Length of motor options	**Δ L**	**[mm]**	170	165	
Motor diameter	**AC**	**[mm]**	123	139	
Distance motor/connection	**AD**	**[mm]**	100	109	



Dimensions, 2-pole motors

g500-S220

Dimensions with shrink disc

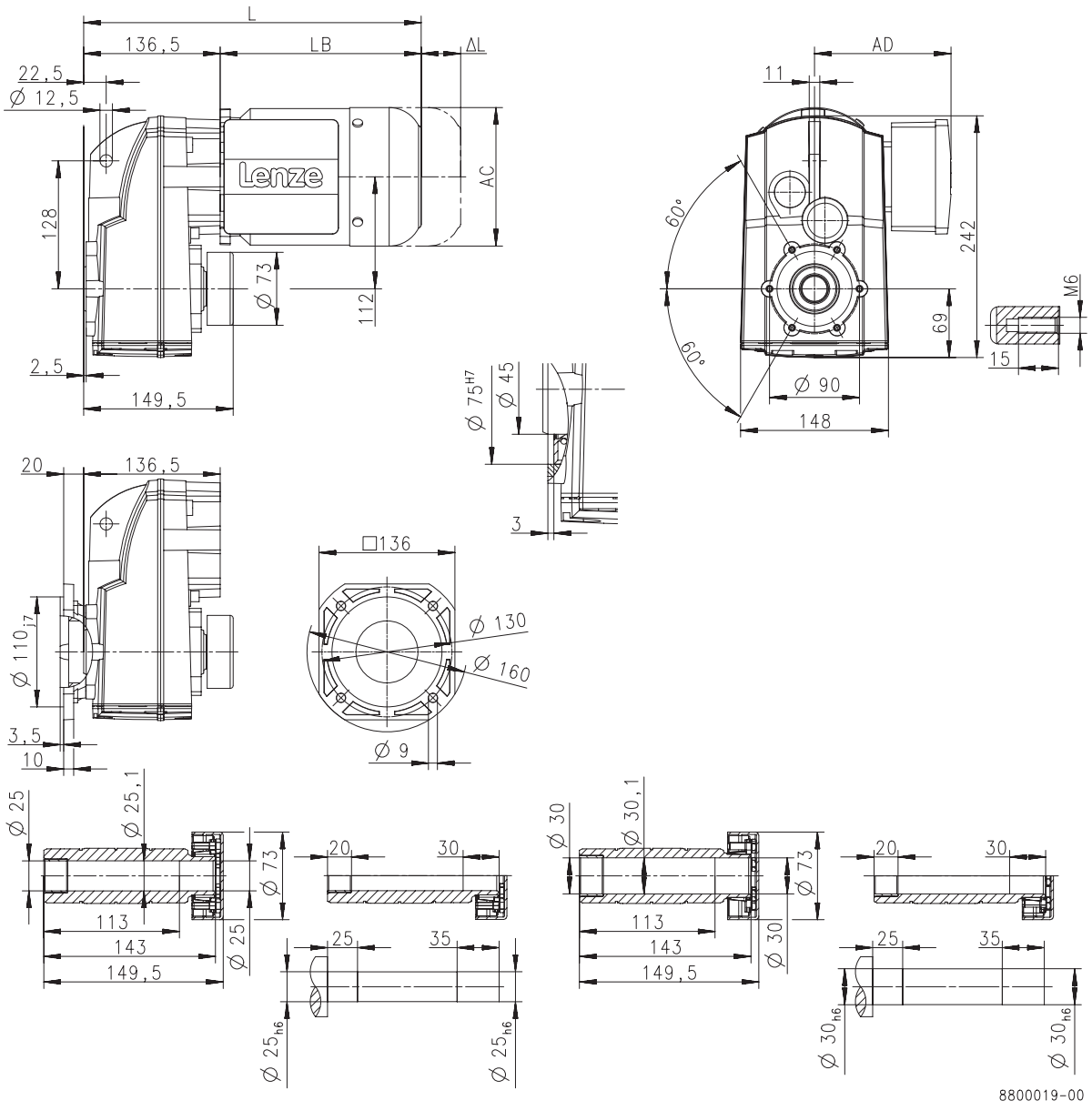

Product			MD□MA□□		
			063-31	071-11	071-31
Dimensions					
Total length	**L**	**[mm]**	320	340	
Motor length	**LB**	**[mm]**	183	203	
Length of motor options	**Δ L**	**[mm]**	170	165	
Motor diameter	**AC**	**[mm]**	123	139	
Distance motor/connection	**AD**	**[mm]**	100	109	



Dimensions, 2-pole motors

g500-S400

Dimensions with hollow shaft

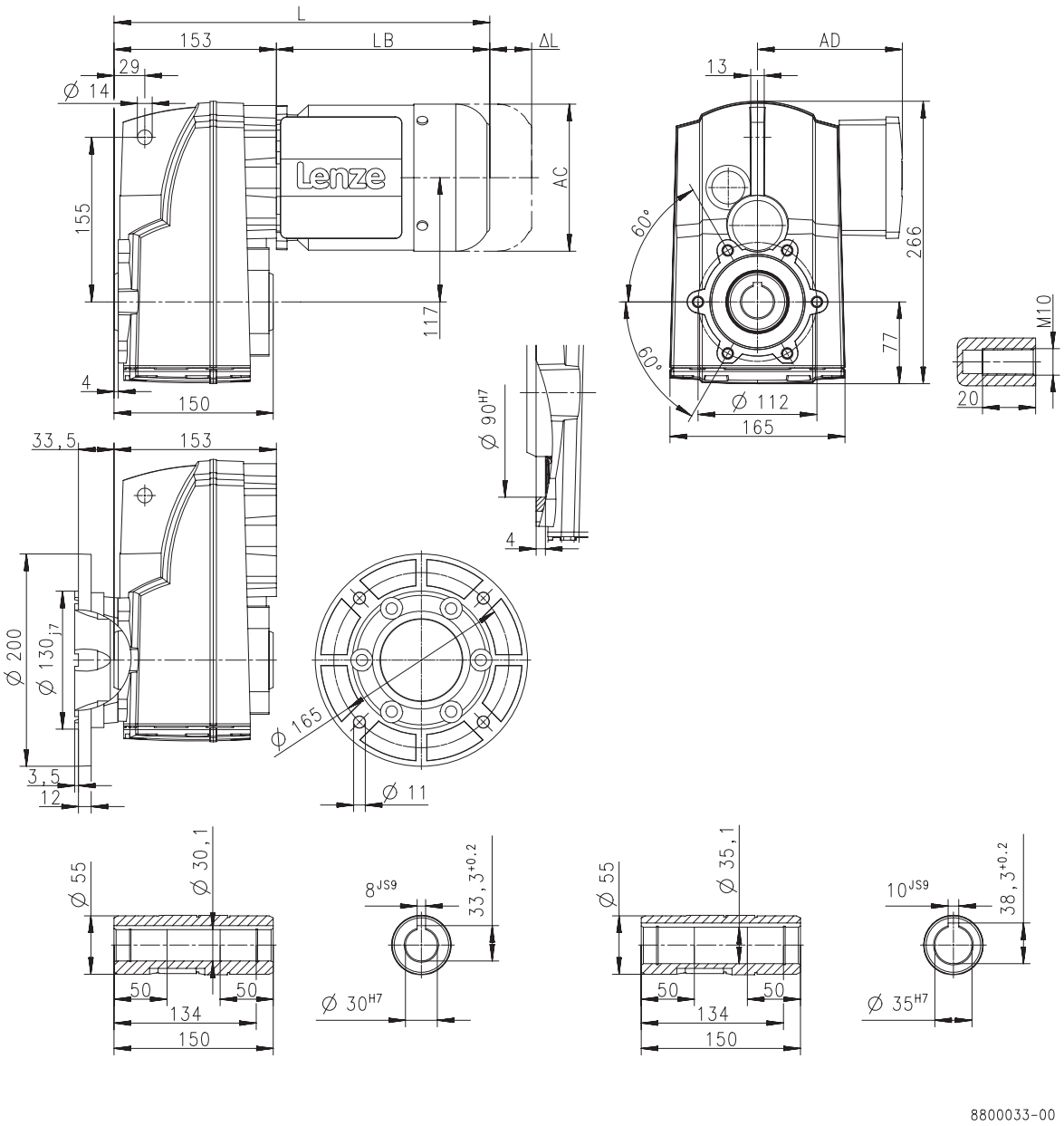

Product			MD□MA□□
			071-31
Dimensions			
Total length	**L**	**[mm]**	356
Motor length	**LB**	**[mm]**	203
Length of motor options	**Δ L**	**[mm]**	165
Motor diameter	**AC**	**[mm]**	139
Distance motor/connection	**AD**	**[mm]**	109



Dimensions, 2-pole motors

g500-S400

Dimensions with solid shaft

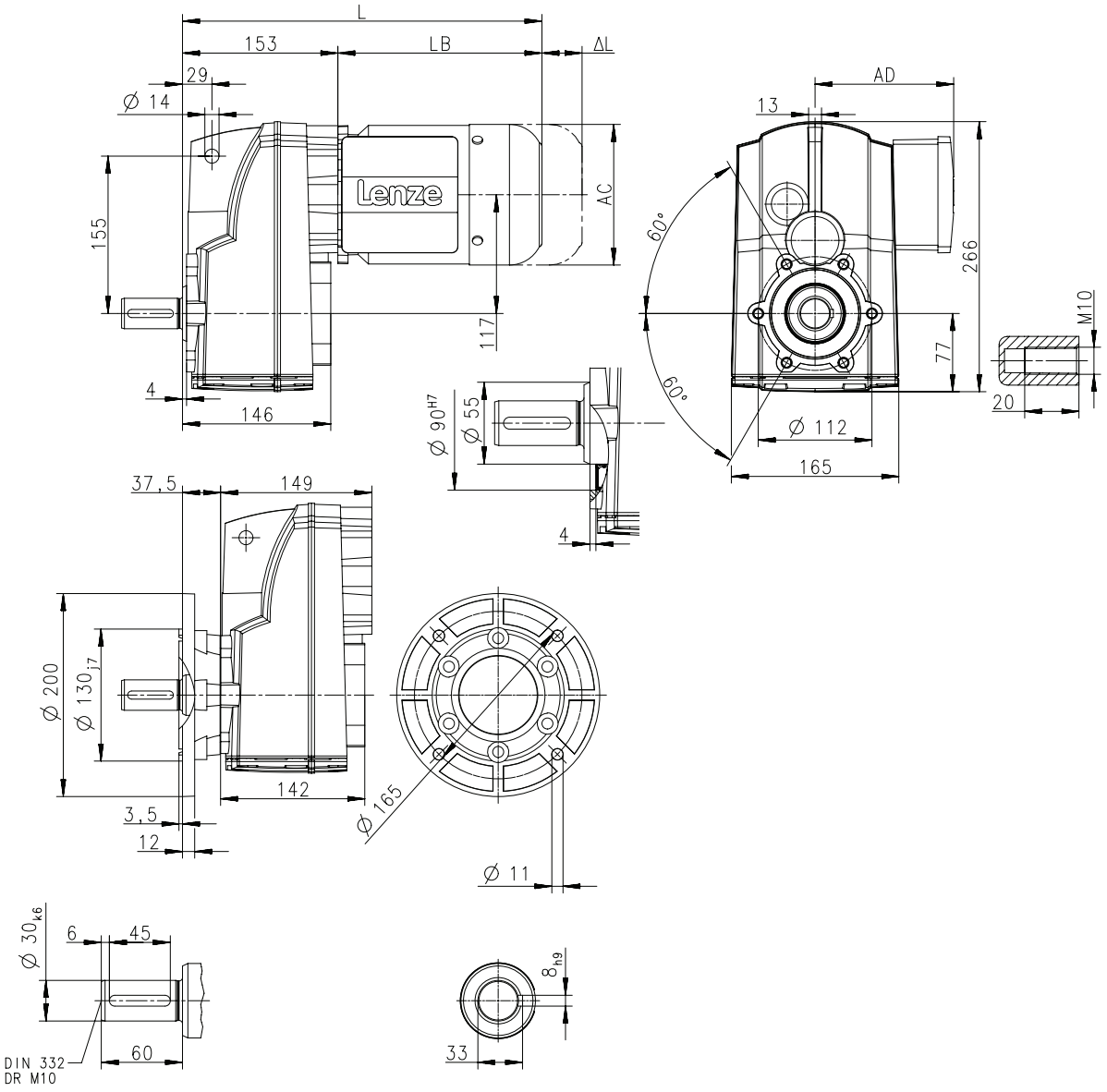

Product			MD□MA□□
			071-31
Dimensions			
Total length	**L**	**[mm]**	356
Motor length	**LB**	**[mm]**	203
Length of motor options	**Δ L**	**[mm]**	165
Motor diameter	**AC**	**[mm]**	139
Distance motor/connection	**AD**	**[mm]**	109



Dimensions, 2-pole motors

g500-S400

Dimensions with solid shaft and foot

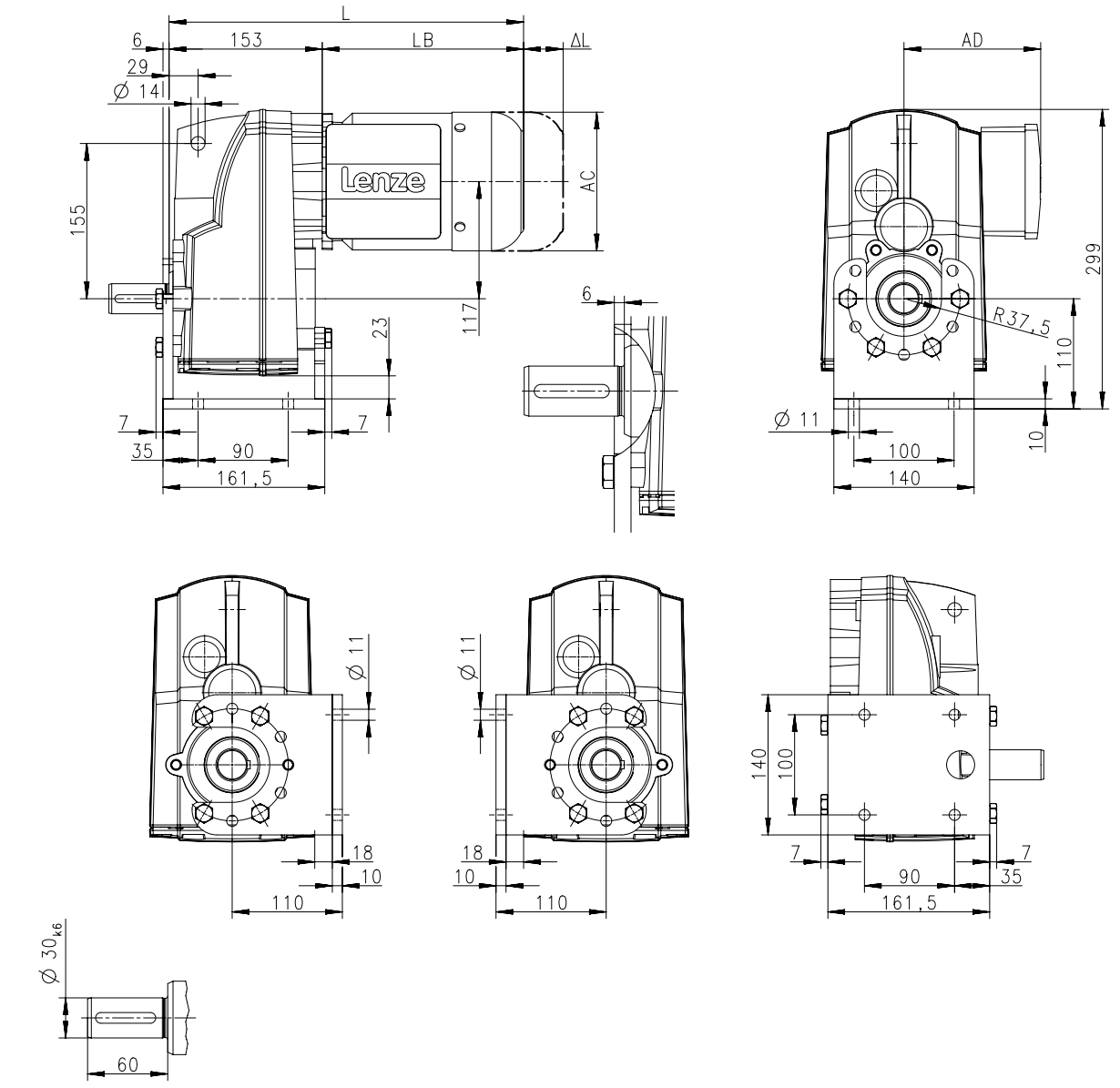

Product			MD□MA□□
			071-31
Dimensions			
Total length	**L**	**[mm]**	356
Motor length	**LB**	**[mm]**	203
Length of motor options	**Δ L**	**[mm]**	165
Motor diameter	**AC**	**[mm]**	139
Distance motor/connection	**AD**	**[mm]**	109



Dimensions, 2-pole motors

g500-S400

Dimensions with shrink disc

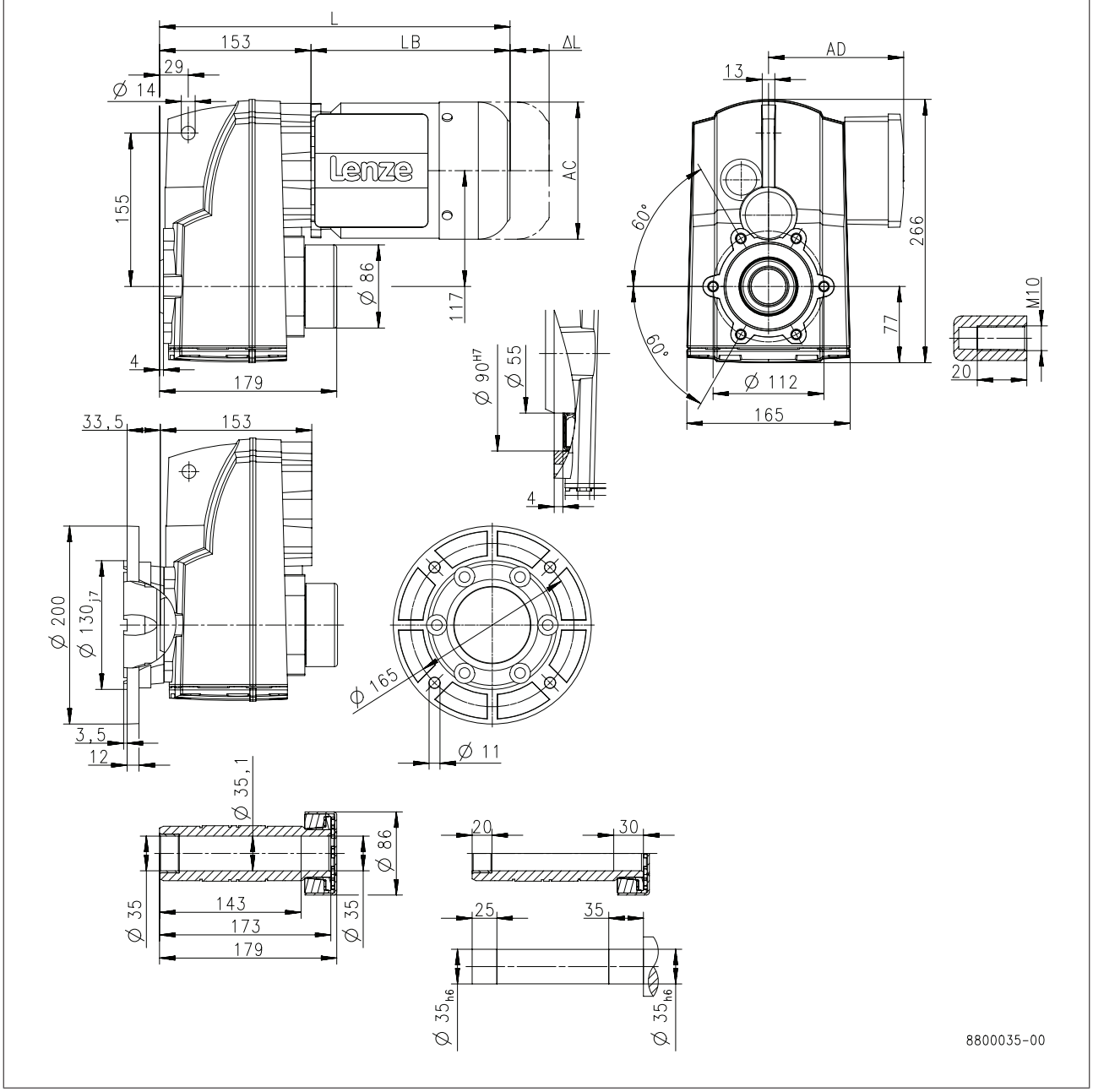

Product			MD□MA□□
			071-31
Dimensions			
Total length	**L**	**[mm]**	356
Motor length	**LB**	**[mm]**	203
Length of motor options	**Δ L**	**[mm]**	165
Motor diameter	**AC**	**[mm]**	139
Distance motor/connection	**AD**	**[mm]**	109



Dimensions, 2-pole motors

g500-S660

Dimensions with hollow shaft

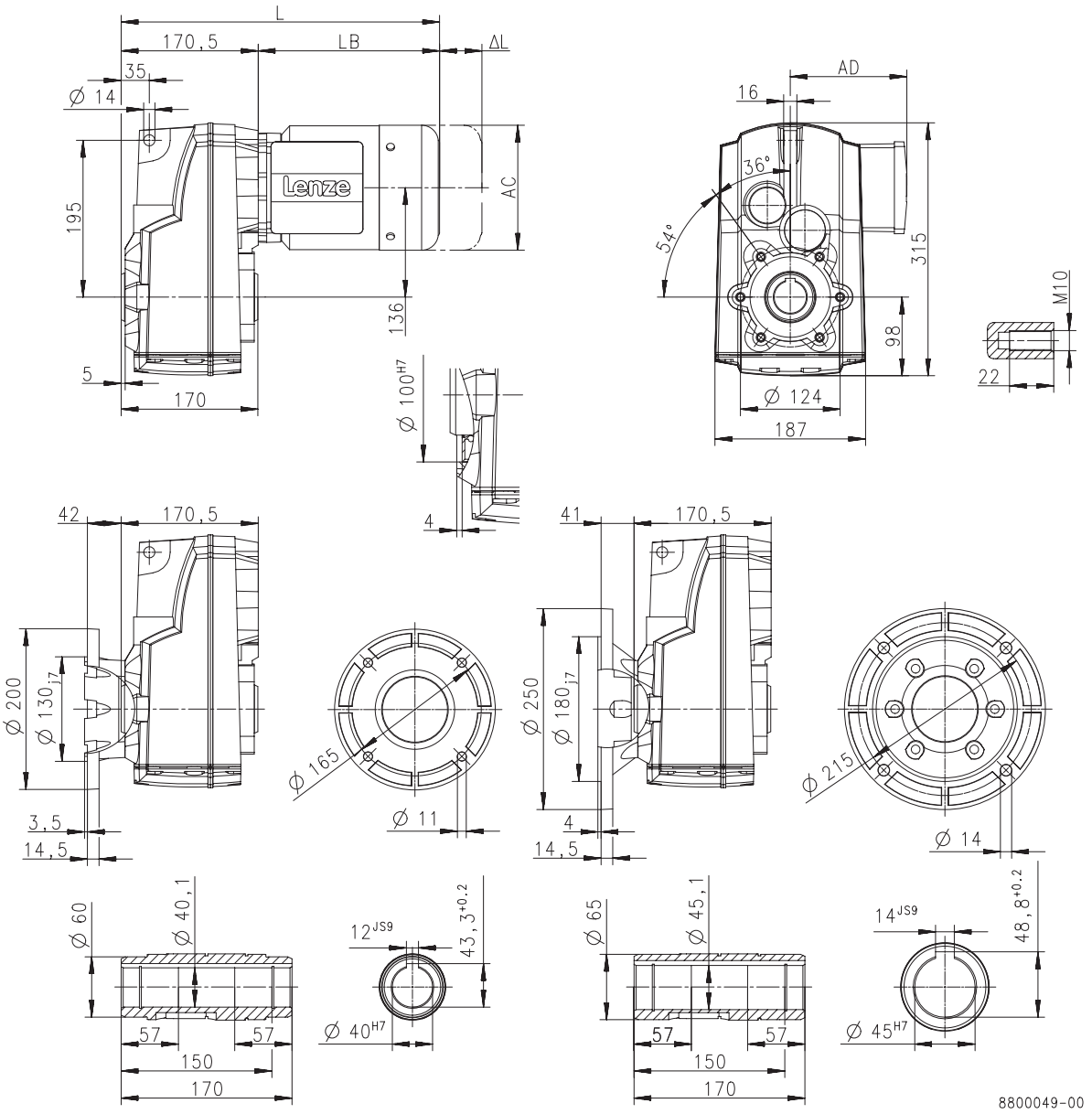

Product		
Dimensions		

6.5



Dimensions, 2-pole motors

g500-S660

Dimensions with solid shaft

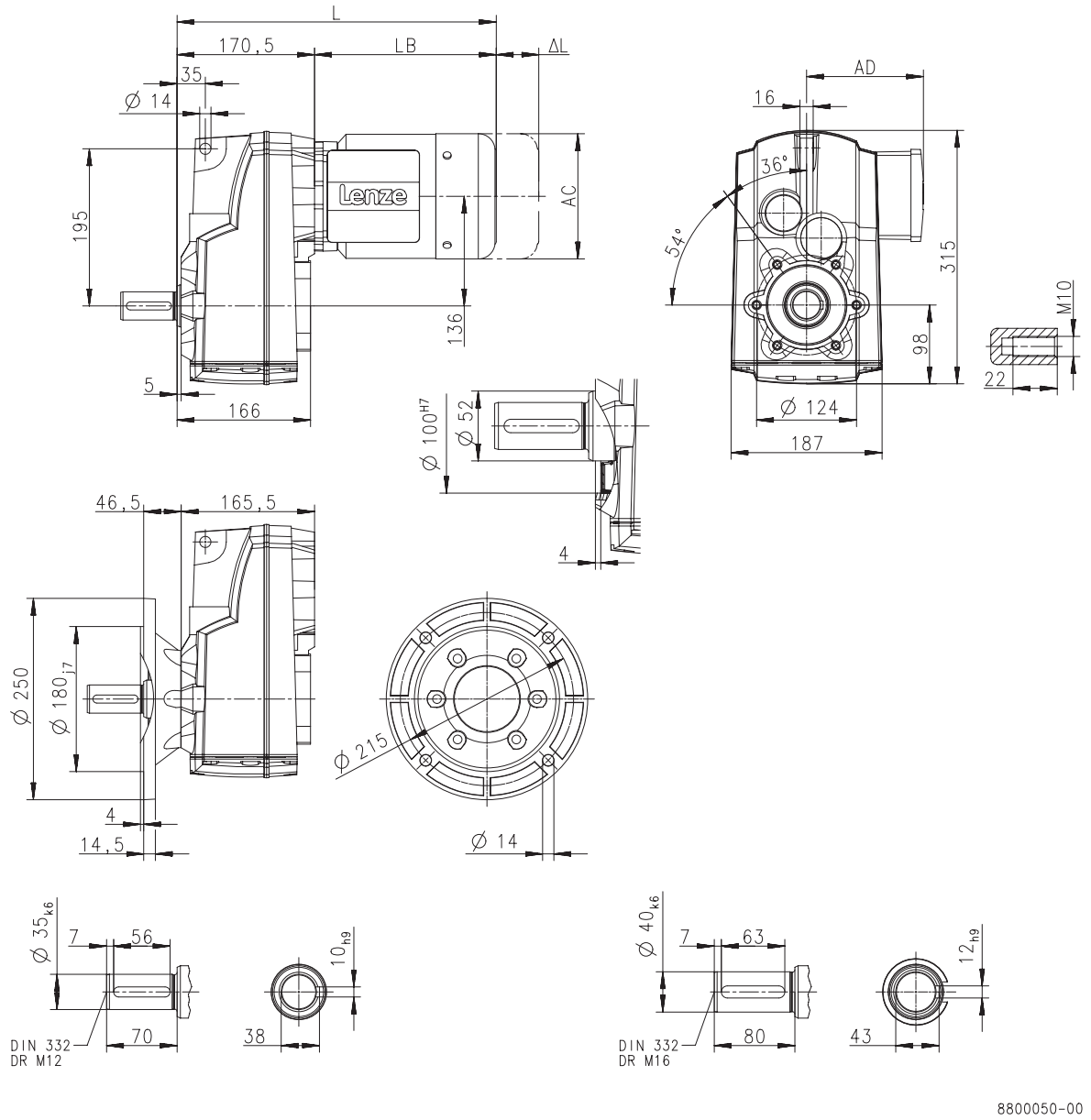

Product		
Dimensions		



Dimensions, 2-pole motors

g500-S660

Dimensions with solid shaft and foot

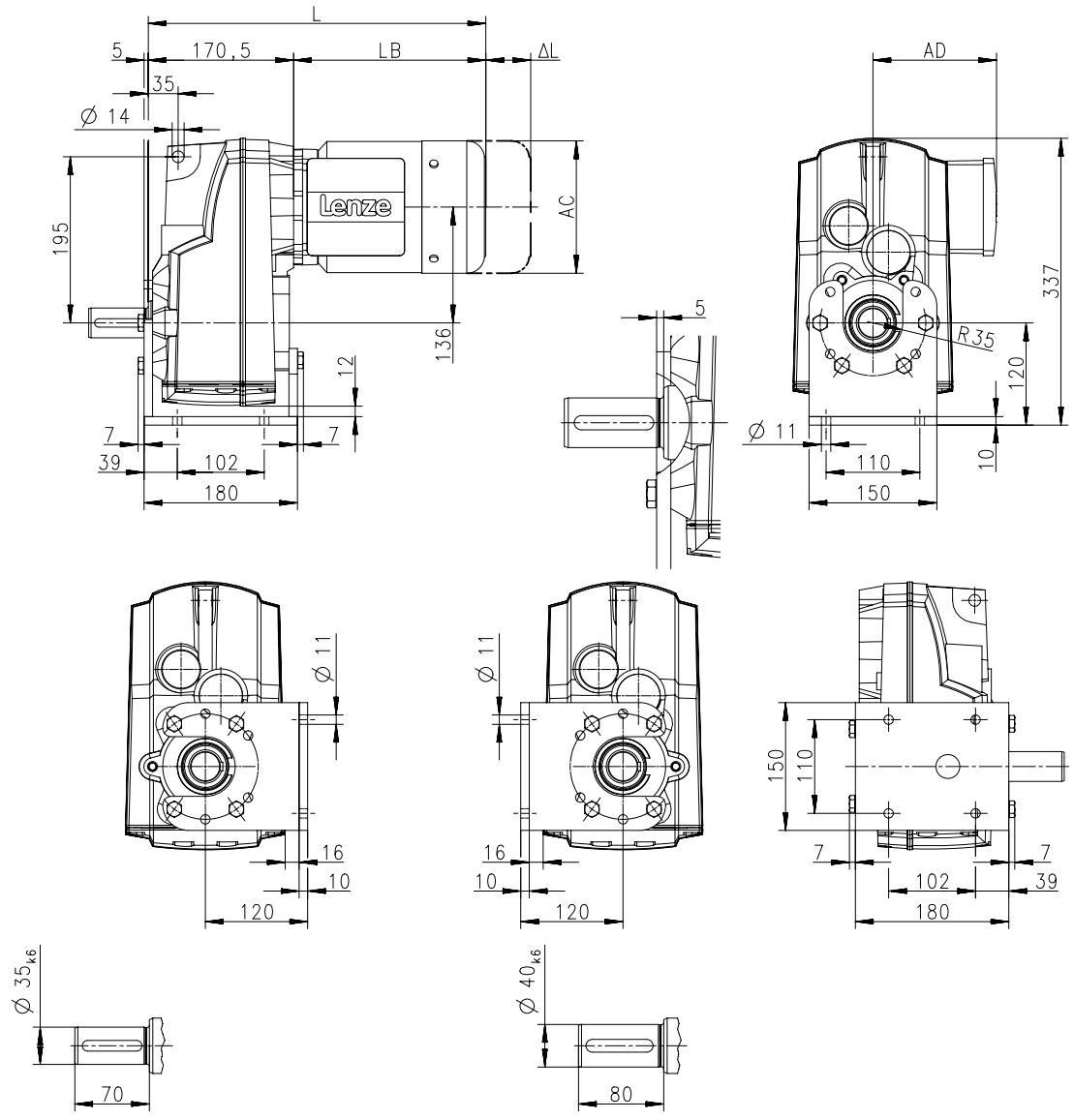

Product		
Dimensions		

6.5



Dimensions, 2-pole motors

g500-S660

Dimensions with shrink disc

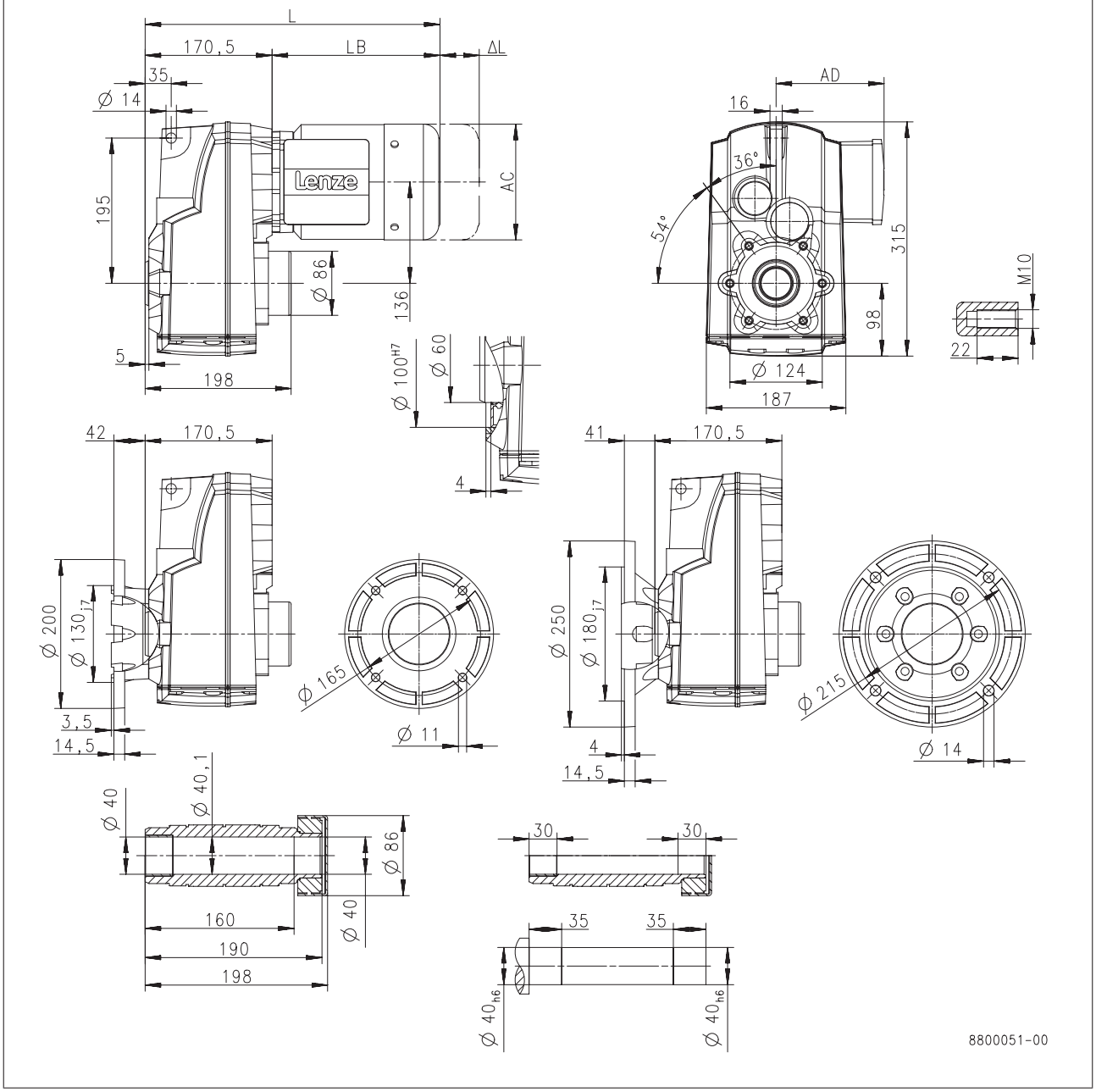

Product		
Dimensions		



Dimensions, 6-pole motors

g500-S130

Dimensions with hollow shaft

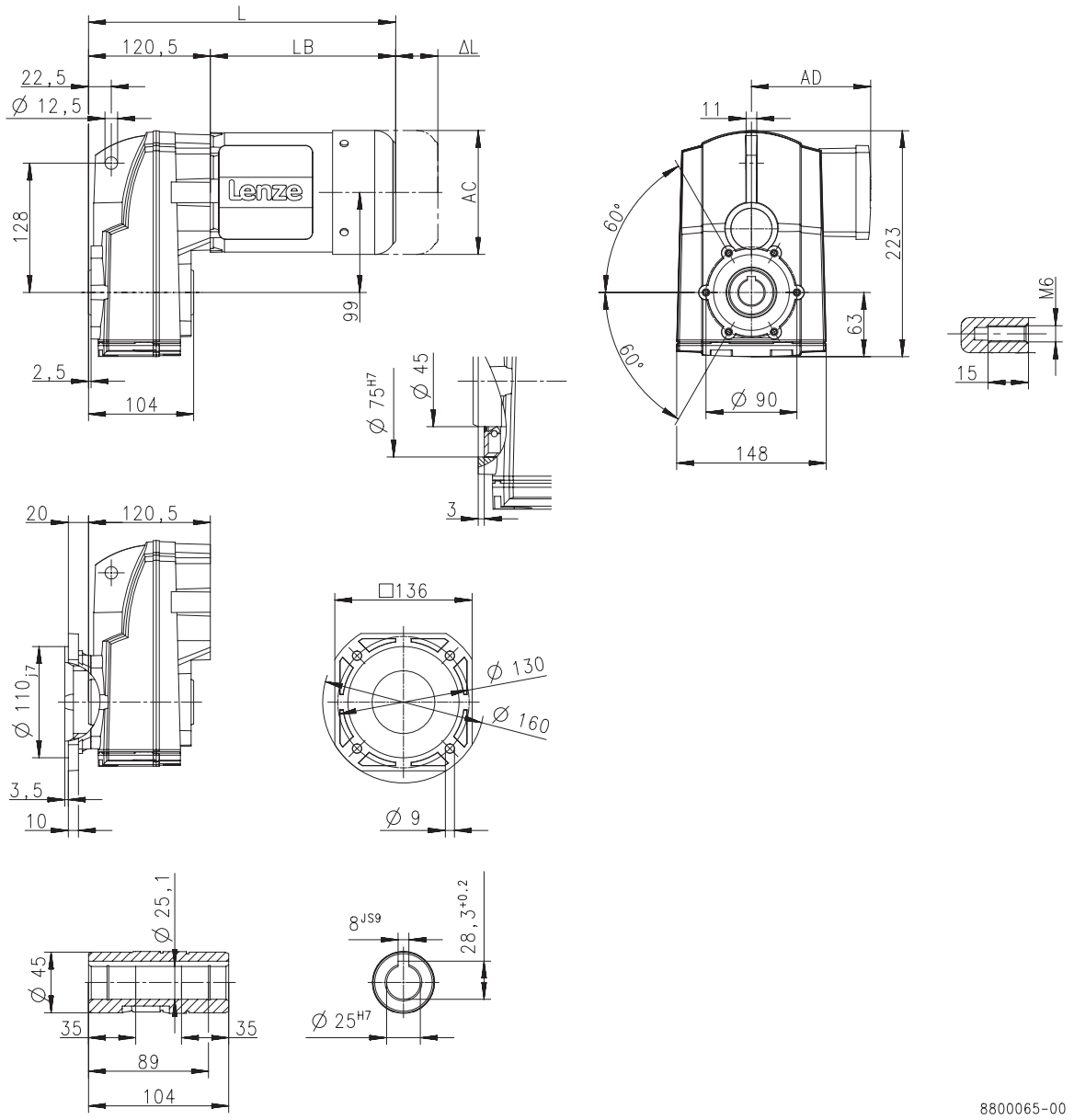

Product			MD□MA□□			
			071-13	071-33	080-13	080-33
Dimensions						
Total length	**L**	**[mm]**	324		347	
Motor length	**LB**	**[mm]**	203		226	
Length of motor options	**Δ L**	**[mm]**	165		183	
Motor diameter	**AC**	**[mm]**	139		156	
Distance motor/connection	**AD**	**[mm]**	109		150	



Dimensions, 6-pole motors

g500-S130

Dimensions with solid shaft

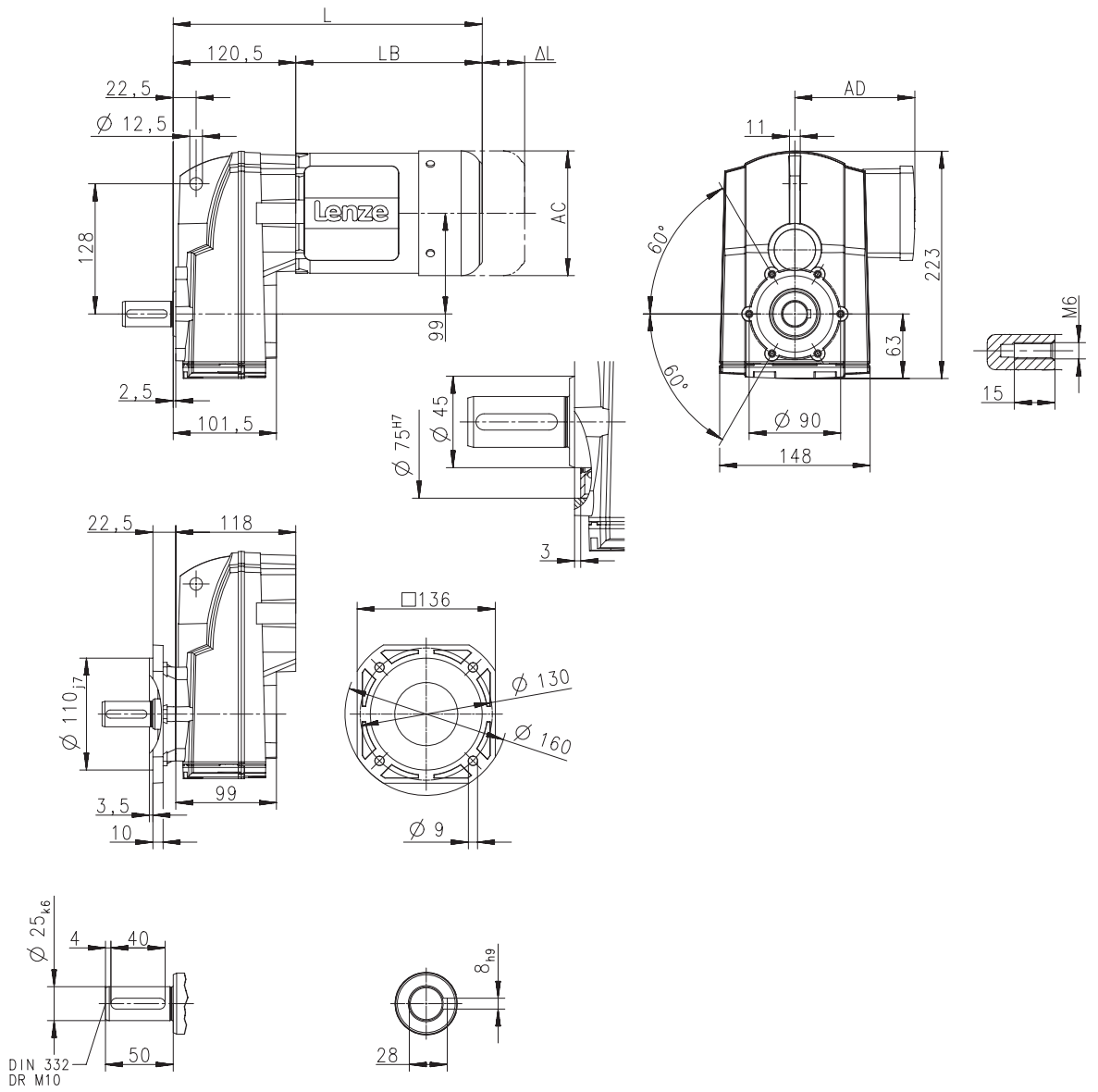

Product			MD□MA□□			
			071-13	071-33	080-13	080-33
Dimensions						
Total length	**L**	**[mm]**	324		347	
Motor length	**LB**	**[mm]**	203		226	
Length of motor options	**Δ L**	**[mm]**	165		183	
Motor diameter	**AC**	**[mm]**	139		156	
Distance motor/connection	**AD**	**[mm]**	109		150	



Dimensions, 6-pole motors

g500-S130

Dimensions with solid shaft and foot

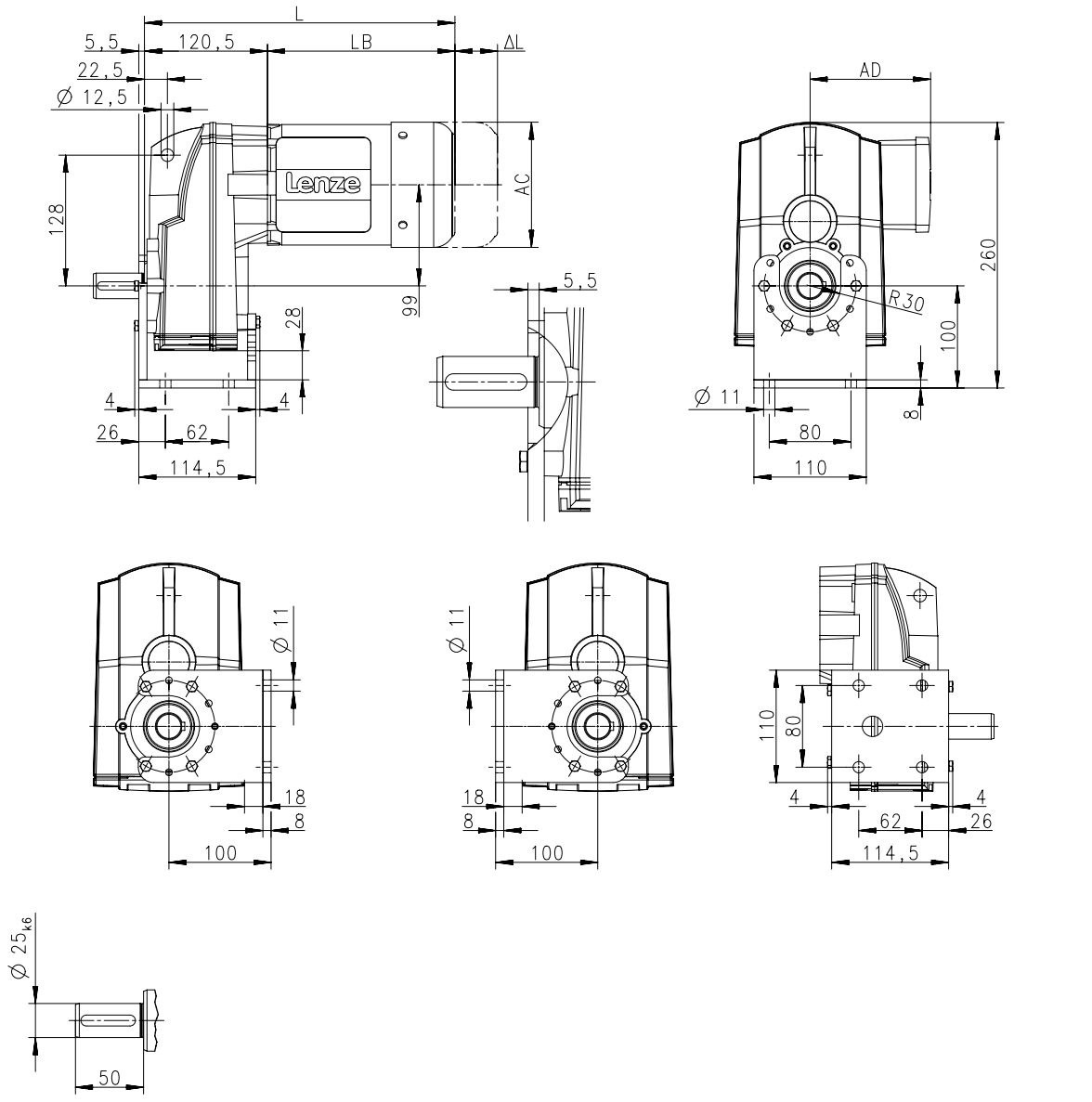

Product			MD□MA□□			
			071-13	071-33	080-13	080-33
Dimensions						
Total length	**L**	**[mm]**	324		347	
Motor length	**LB**	**[mm]**	203		226	
Length of motor options	**Δ L**	**[mm]**	165		183	
Motor diameter	**AC**	**[mm]**	139		156	
Distance motor/connection	**AD**	**[mm]**	109		150	



Dimensions, 6-pole motors

g500-S130

Dimensions with shrink disc

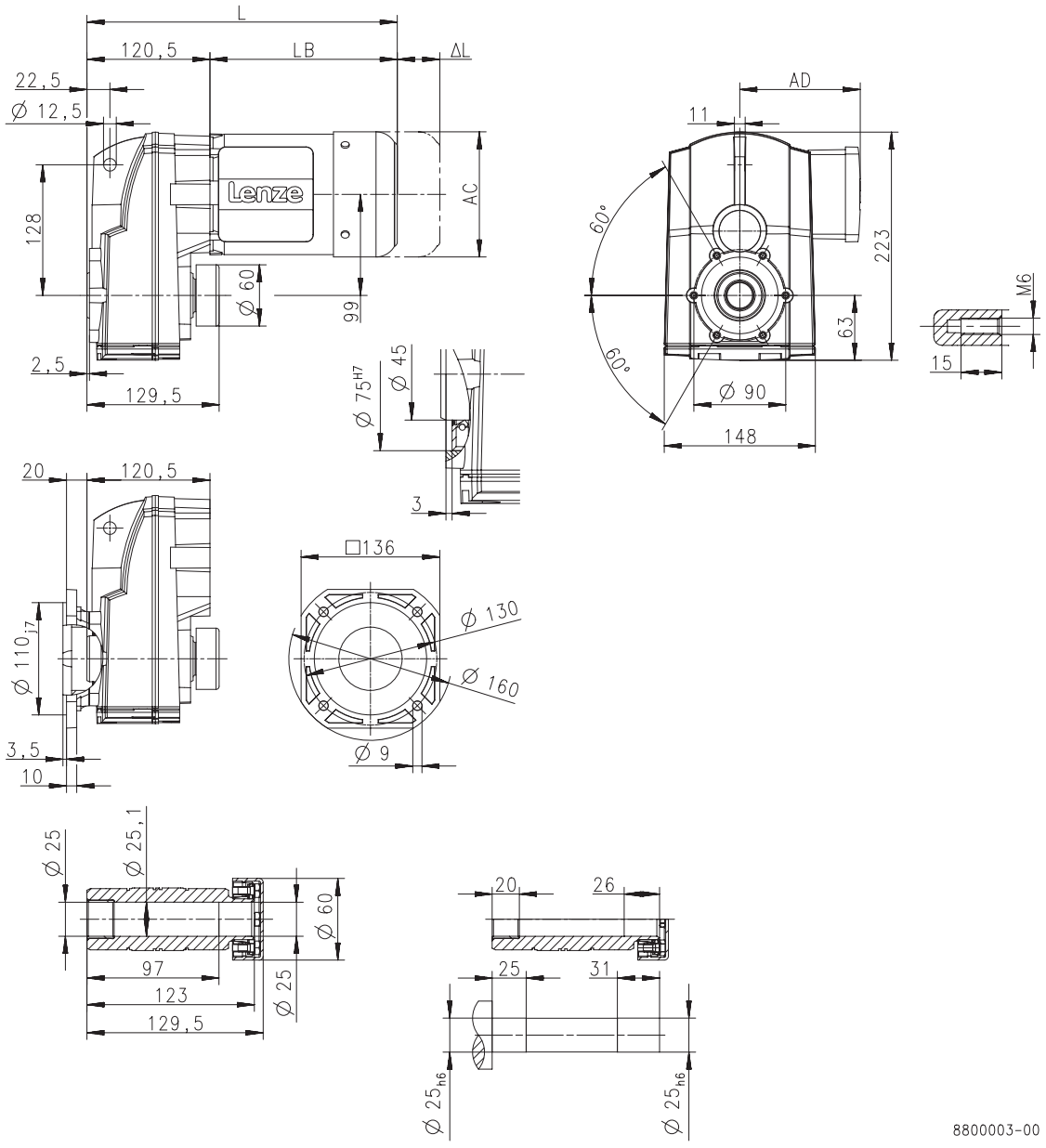

Product			MD□MA□□			
			071-13	071-33	080-13	080-33
Dimensions						
Total length	**L**	**[mm]**	324		347	
Motor length	**LB**	**[mm]**	203		226	
Length of motor options	**Δ L**	**[mm]**	165		183	
Motor diameter	**AC**	**[mm]**	139		156	
Distance motor/connection	**AD**	**[mm]**	109		150	



Dimensions, 6-pole motors

g500-S220

Dimensions with hollow shaft

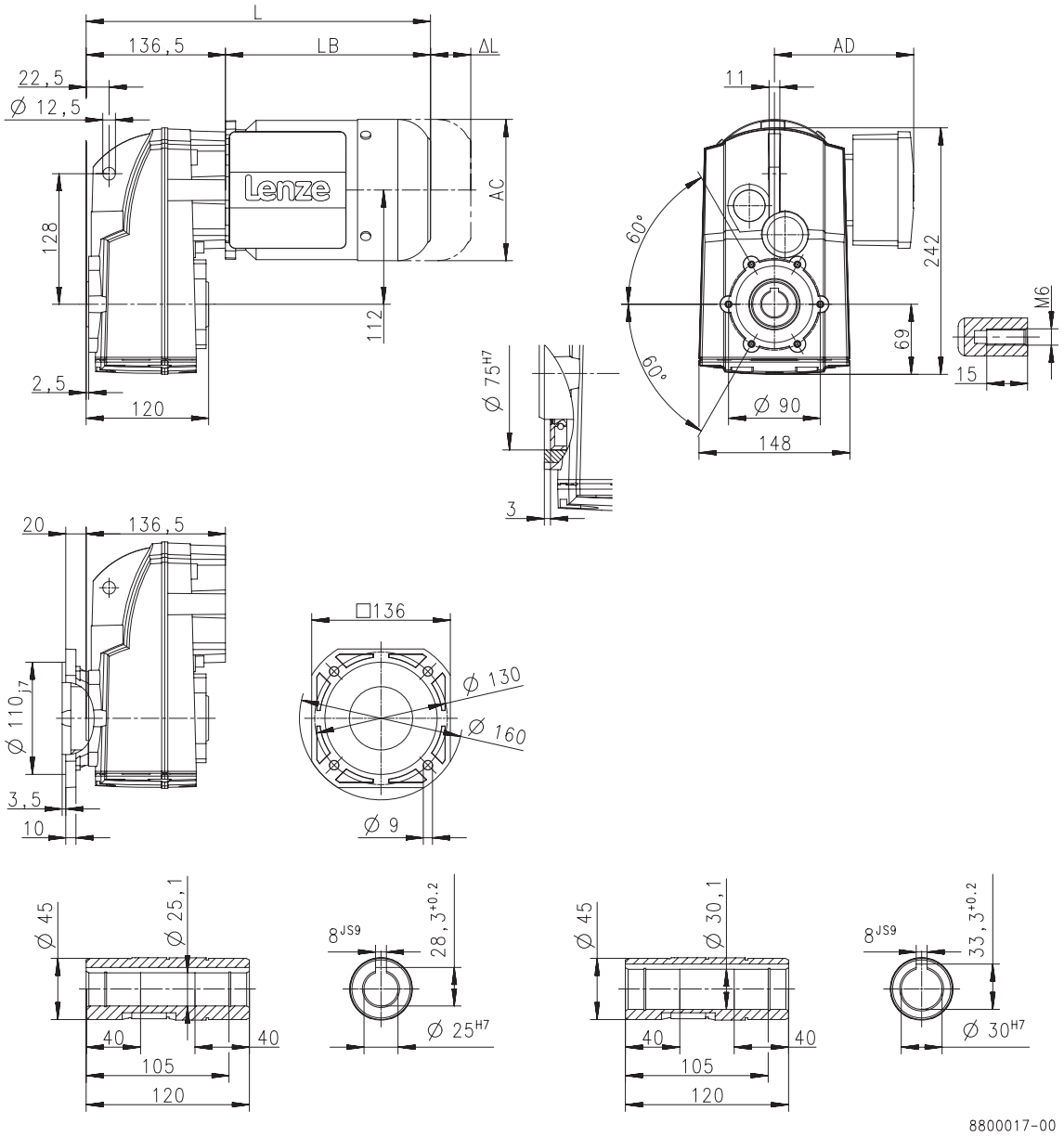

Product			MD□MA□□			
			071-13	071-33	080-13	080-33
Dimensions						
Total length	**L**	**[mm]**	340		363	
Motor length	**LB**	**[mm]**	203		226	
Length of motor options	**Δ L**	**[mm]**	165		183	
Motor diameter	**AC**	**[mm]**	139		156	
Distance motor/connection	**AD**	**[mm]**	109		150	



Dimensions, 6-pole motors

g500-S220

Dimensions with solid shaft

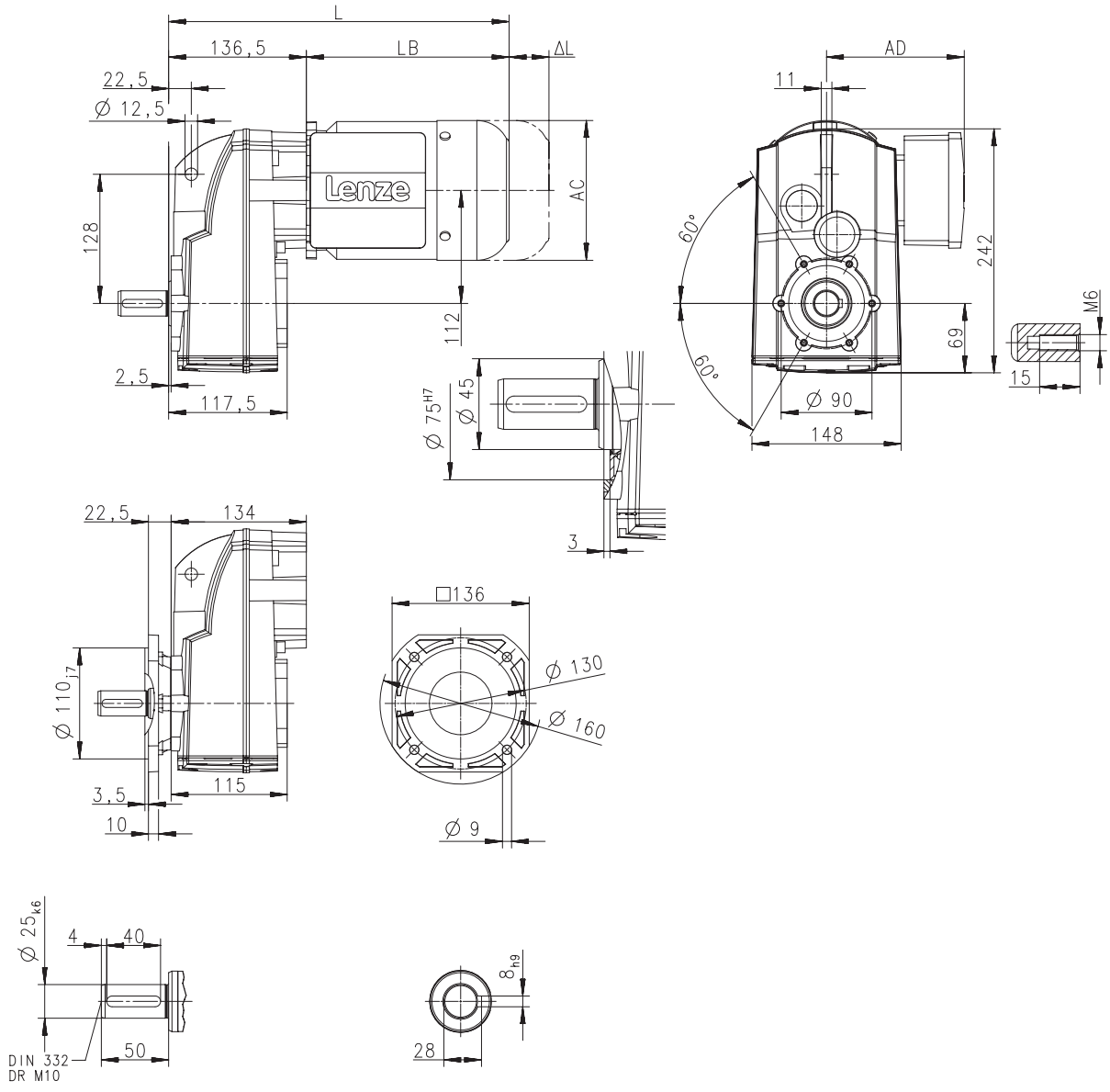

Product			MD□MA□□			
			071-13	071-33	080-13	080-33
Dimensions						
Total length	**L**	**[mm]**	340		363	
Motor length	**LB**	**[mm]**	203		226	
Length of motor options	**Δ L**	**[mm]**	165		183	
Motor diameter	**AC**	**[mm]**	139		156	
Distance motor/connection	**AD**	**[mm]**	109		150	



Dimensions, 6-pole motors

g500-S220

Dimensions with solid shaft and foot

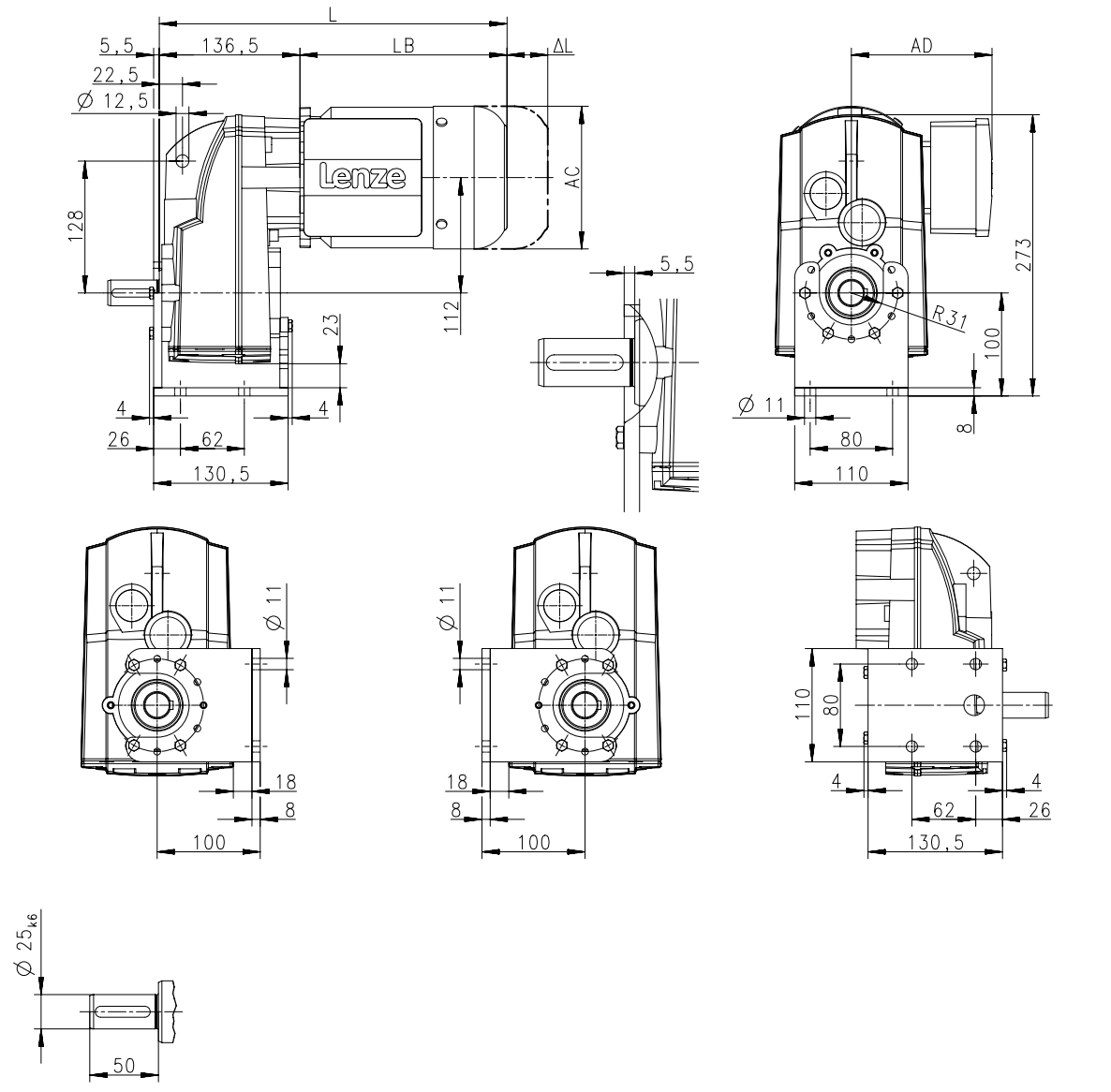

Product			MD□MA□□			
			071-13	071-33	080-13	080-33
Dimensions						
Total length	**L**	**[mm]**	340		363	
Motor length	**LB**	**[mm]**	203		226	
Length of motor options	**Δ L**	**[mm]**	165		183	
Motor diameter	**AC**	**[mm]**	139		156	
Distance motor/connection	**AD**	**[mm]**	109		150	



Dimensions, 6-pole motors

g500-S220

Dimensions with shrink disc

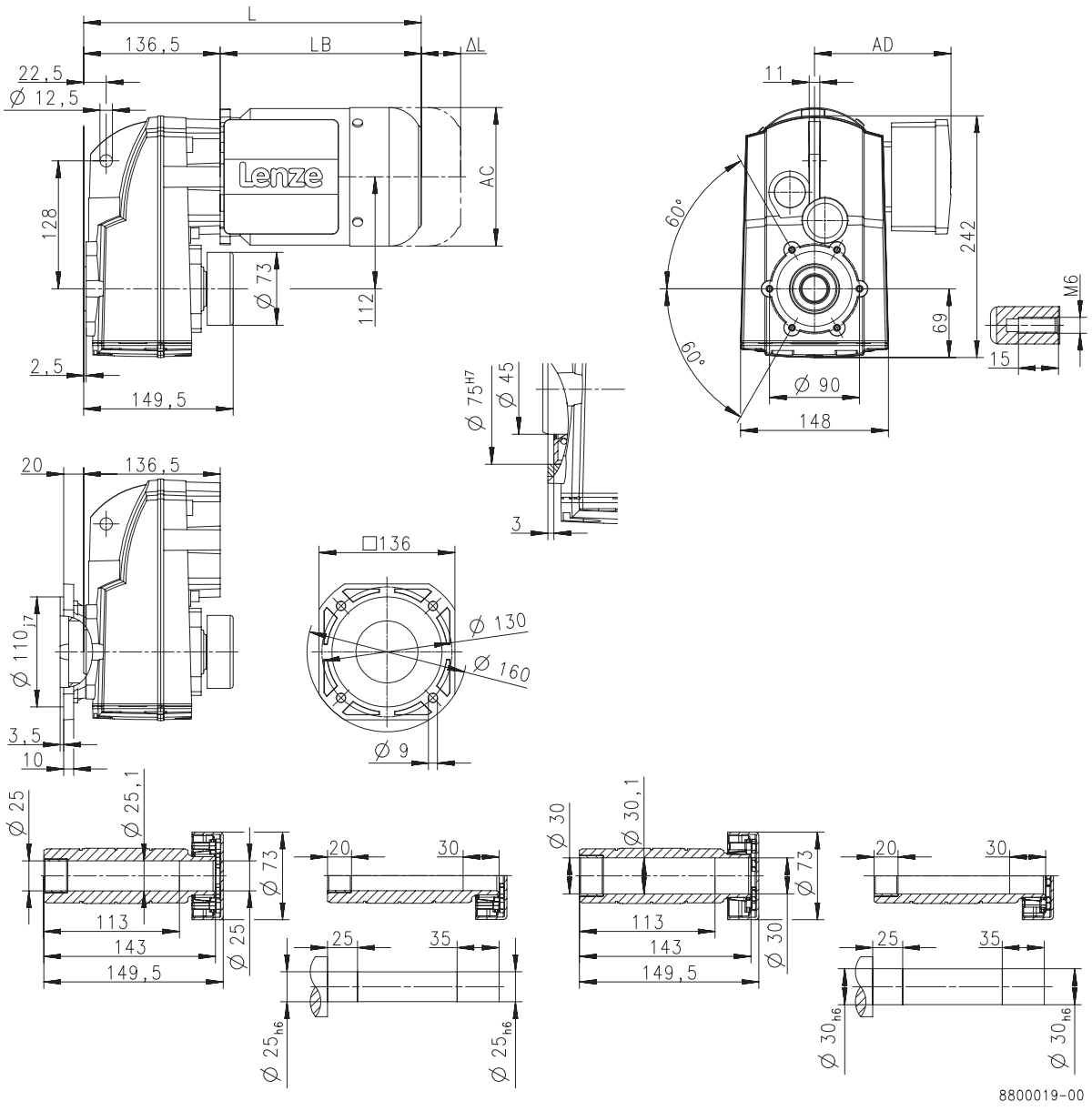

Product			MD□MA□□			
			071-13	071-33	080-13	080-33
Dimensions						
Total length	**L**	**[mm]**	340		363	
Motor length	**LB**	**[mm]**	203		226	
Length of motor options	**Δ L**	**[mm]**	165		183	
Motor diameter	**AC**	**[mm]**	139		156	
Distance motor/connection	**AD**	**[mm]**	109		150	



Dimensions, 6-pole motors

g500-S400

Dimensions with hollow shaft

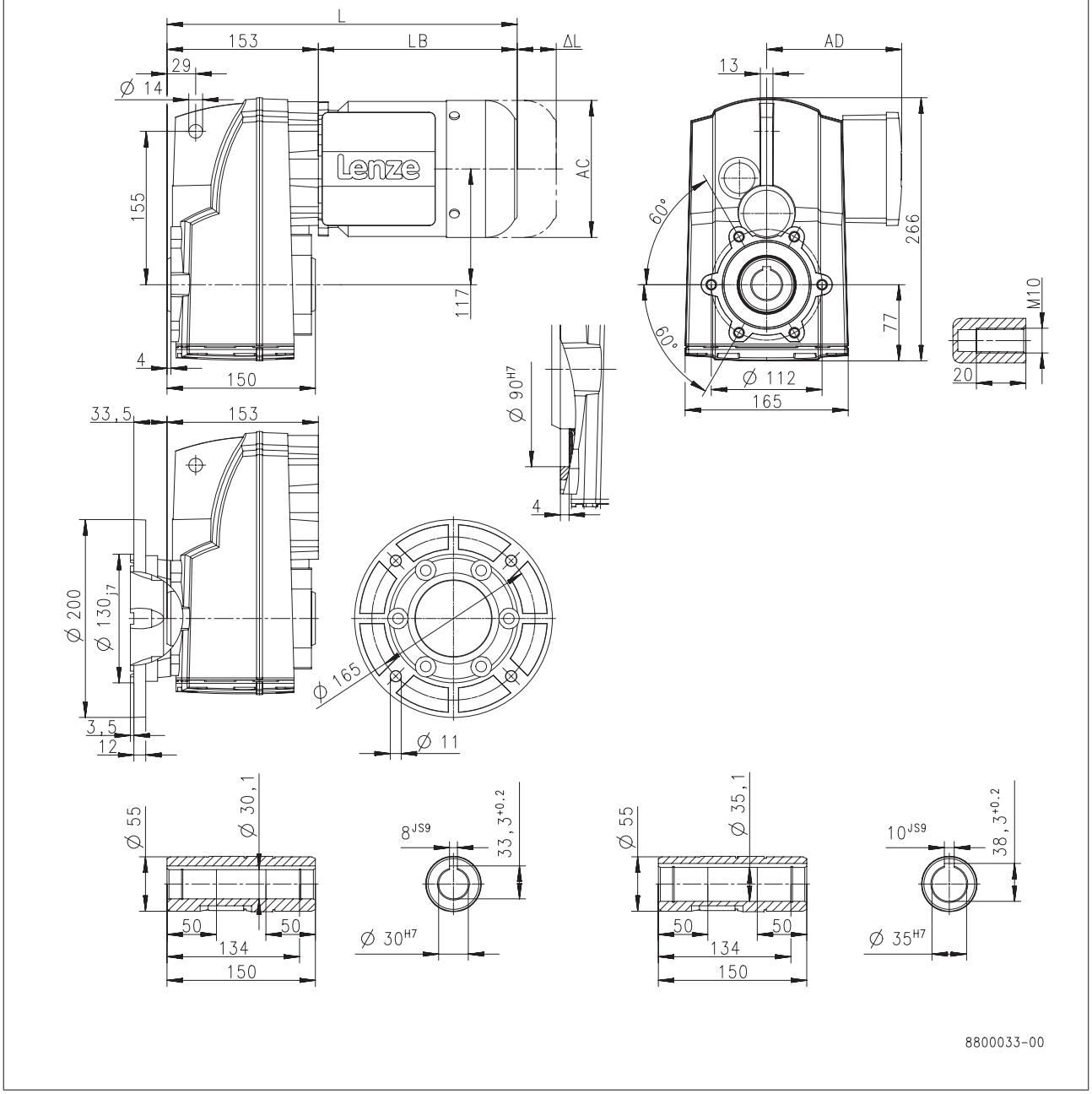

Product			MD□MA□□			
			071-13	071-33	080-13	080-33
Dimensions						
Total length	**L**	**[mm]**	356		379	
Motor length	**LB**	**[mm]**	203		226	
Length of motor options	**Δ L**	**[mm]**	165		183	
Motor diameter	**AC**	**[mm]**	139		156	
Distance motor/connection	**AD**	**[mm]**	109		150	



Dimensions, 6-pole motors

g500-S400

Dimensions with solid shaft

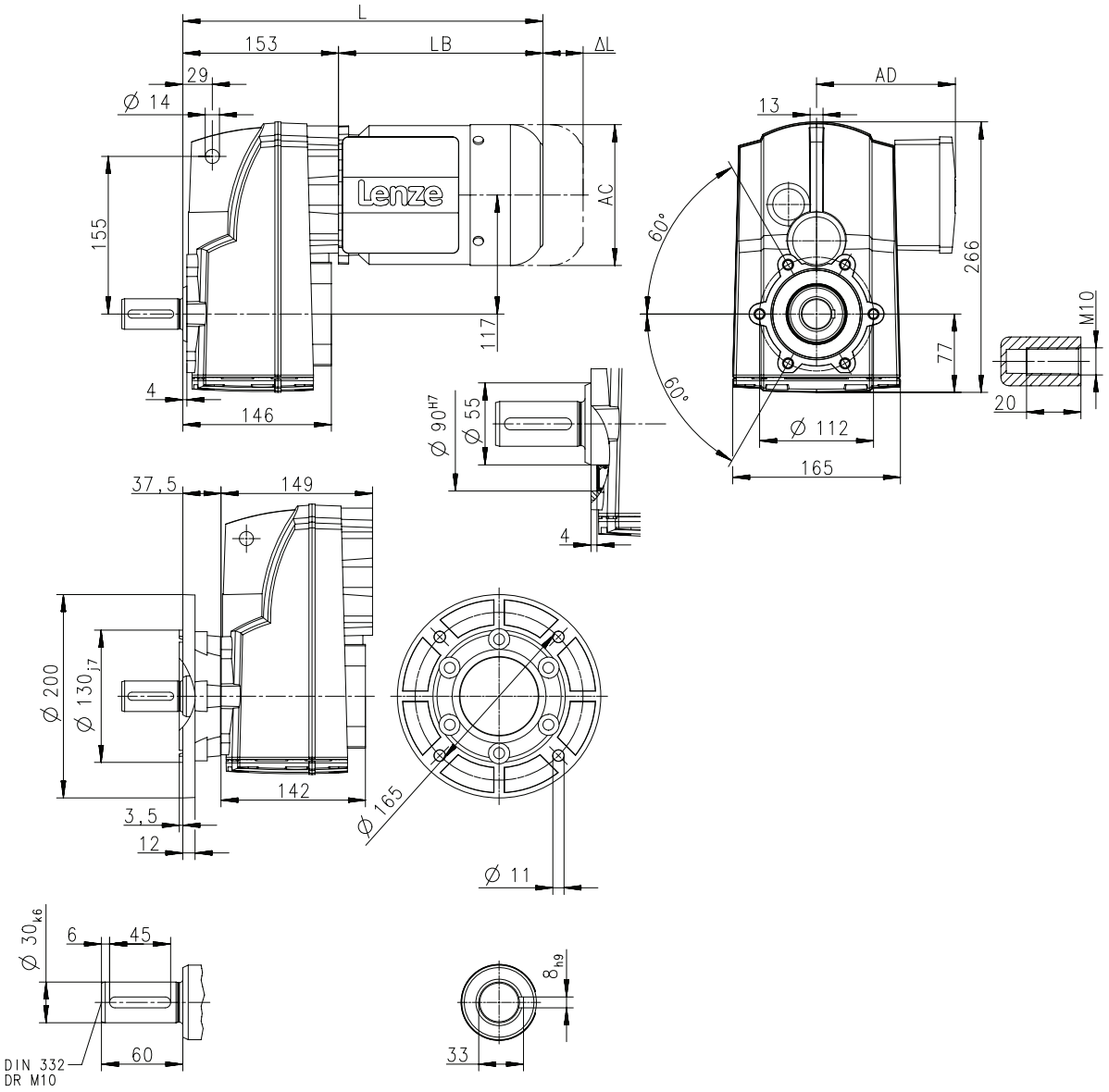

Product			MD□MA□□			
			071-13	071-33	080-13	080-33
Dimensions						
Total length	**L**	**[mm]**	356		379	
Motor length	**LB**	**[mm]**	203		226	
Length of motor options	**Δ L**	**[mm]**	165		183	
Motor diameter	**AC**	**[mm]**	139		156	
Distance motor/connection	**AD**	**[mm]**	109		150	



Dimensions, 6-pole motors

g500-S400

Dimensions with solid shaft and foot

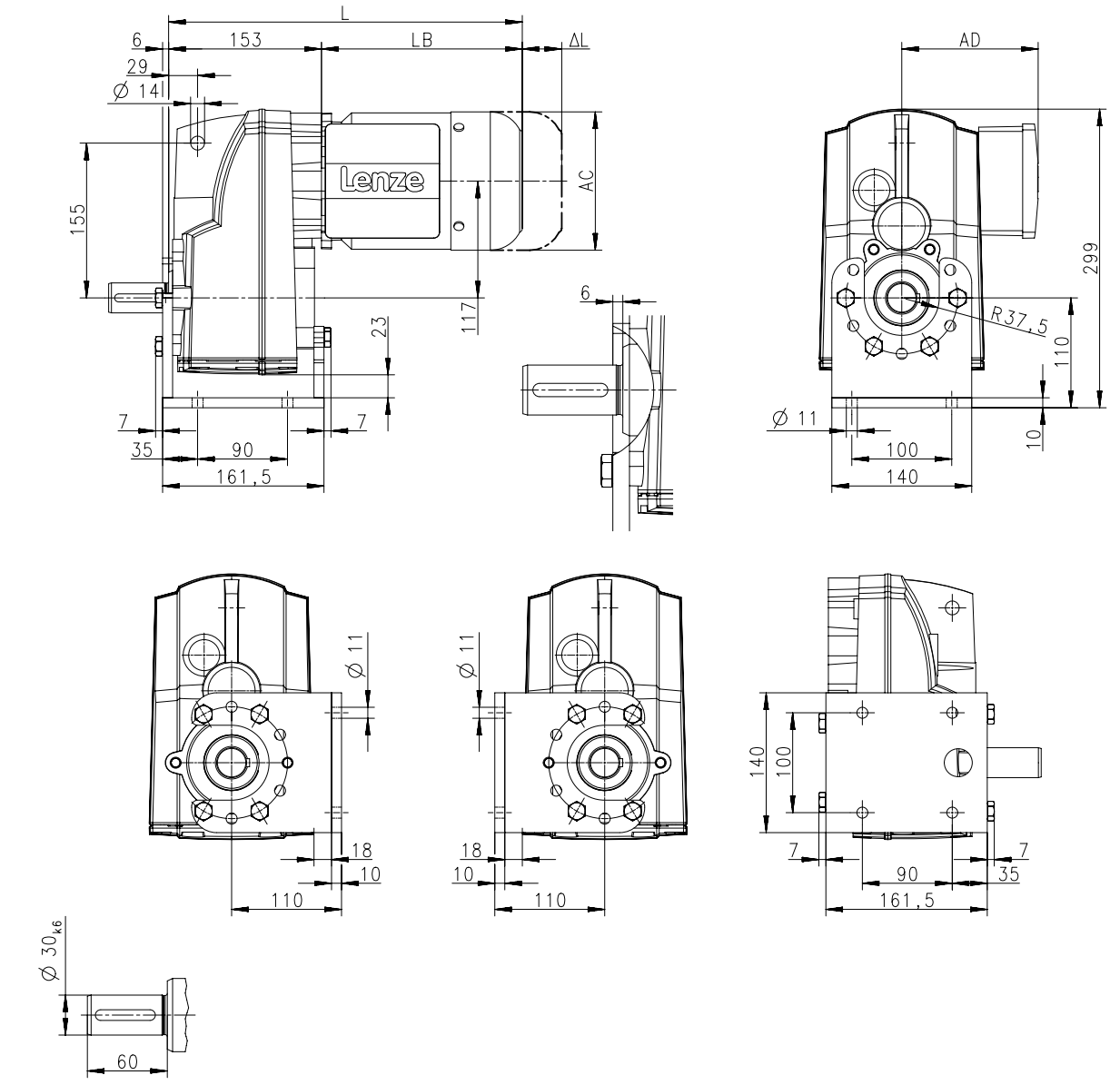

Product			MD□MA□□			
			071-13	071-33	080-13	080-33
Dimensions						
Total length	**L**	**[mm]**	356		379	
Motor length	**LB**	**[mm]**	203		226	
Length of motor options	**Δ L**	**[mm]**	165		183	
Motor diameter	**AC**	**[mm]**	139		156	
Distance motor/connection	**AD**	**[mm]**	109		150	



Dimensions, 6-pole motors

g500-S400

Dimensions with shrink disc

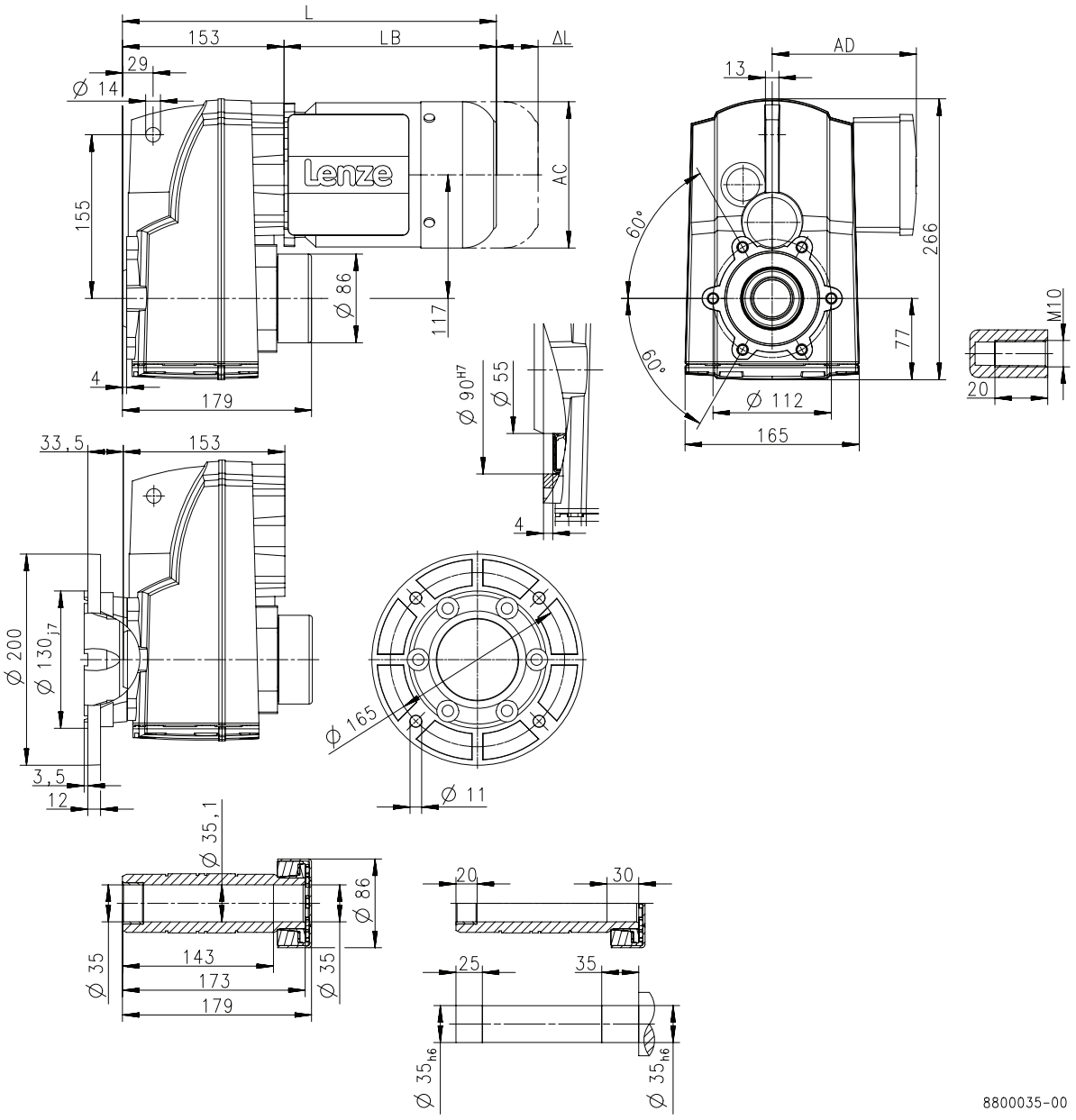

Product			MD□MA□□			
			071-13	071-33	080-13	080-33
Dimensions						
Total length	**L**	**[mm]**	356		379	
Motor length	**LB**	**[mm]**	203		226	
Length of motor options	**Δ L**	**[mm]**	165		183	
Motor diameter	**AC**	**[mm]**	139		156	
Distance motor/connection	**AD**	**[mm]**	109		150	



Dimensions, 6-pole motors

g500-S660

Dimensions with hollow shaft

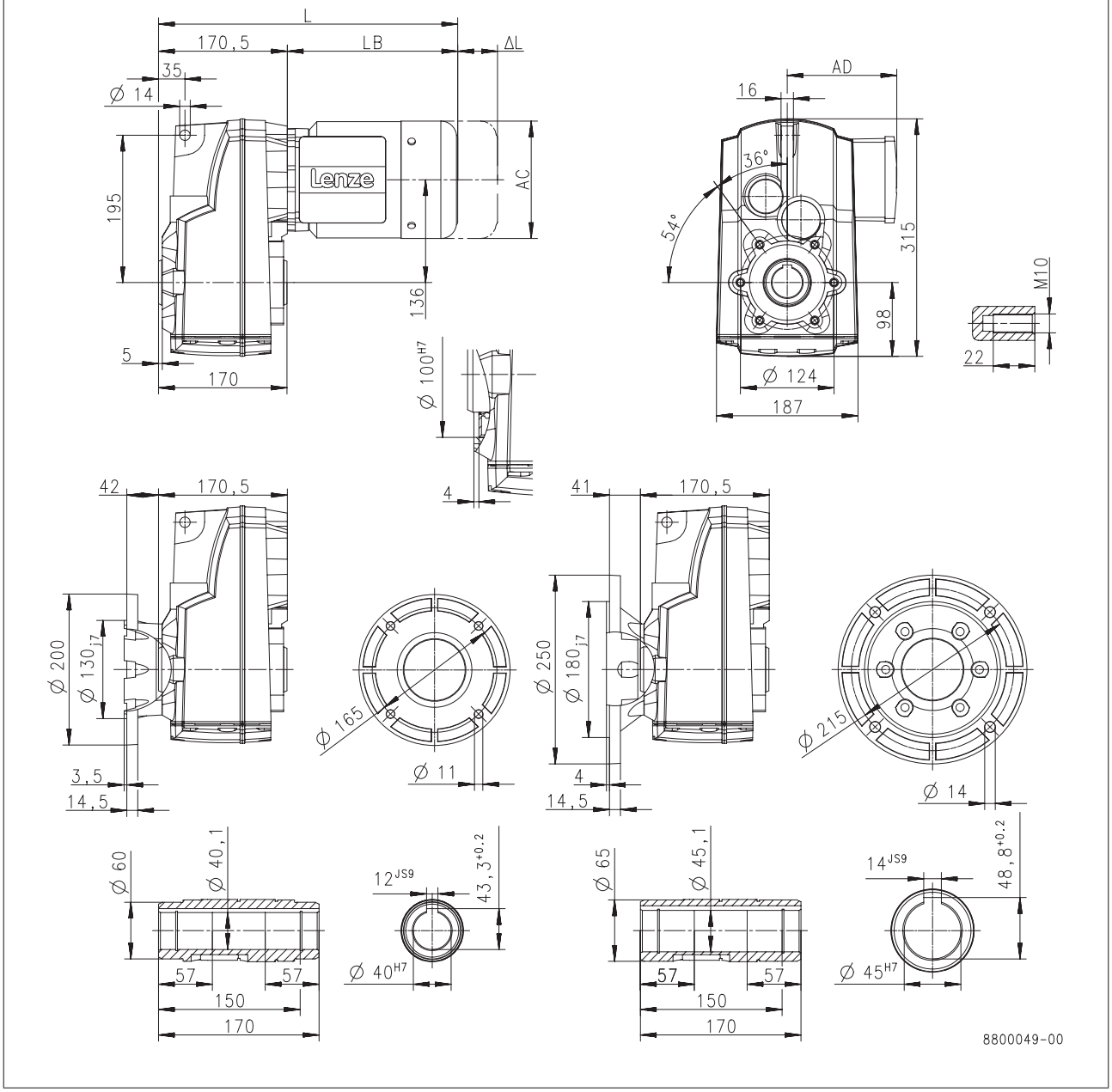

Product			MD□MA□□			
			071-13	071-33	080-13	080-33
Dimensions						
Total length	**L**	**[mm]**	374		397	
Motor length	**LB**	**[mm]**	203		226	
Length of motor options	**Δ L**	**[mm]**	165		183	
Motor diameter	**AC**	**[mm]**	139		156	
Distance motor/connection	**AD**	**[mm]**	109		150	



Dimensions, 6-pole motors

g500-S660

Dimensions with solid shaft

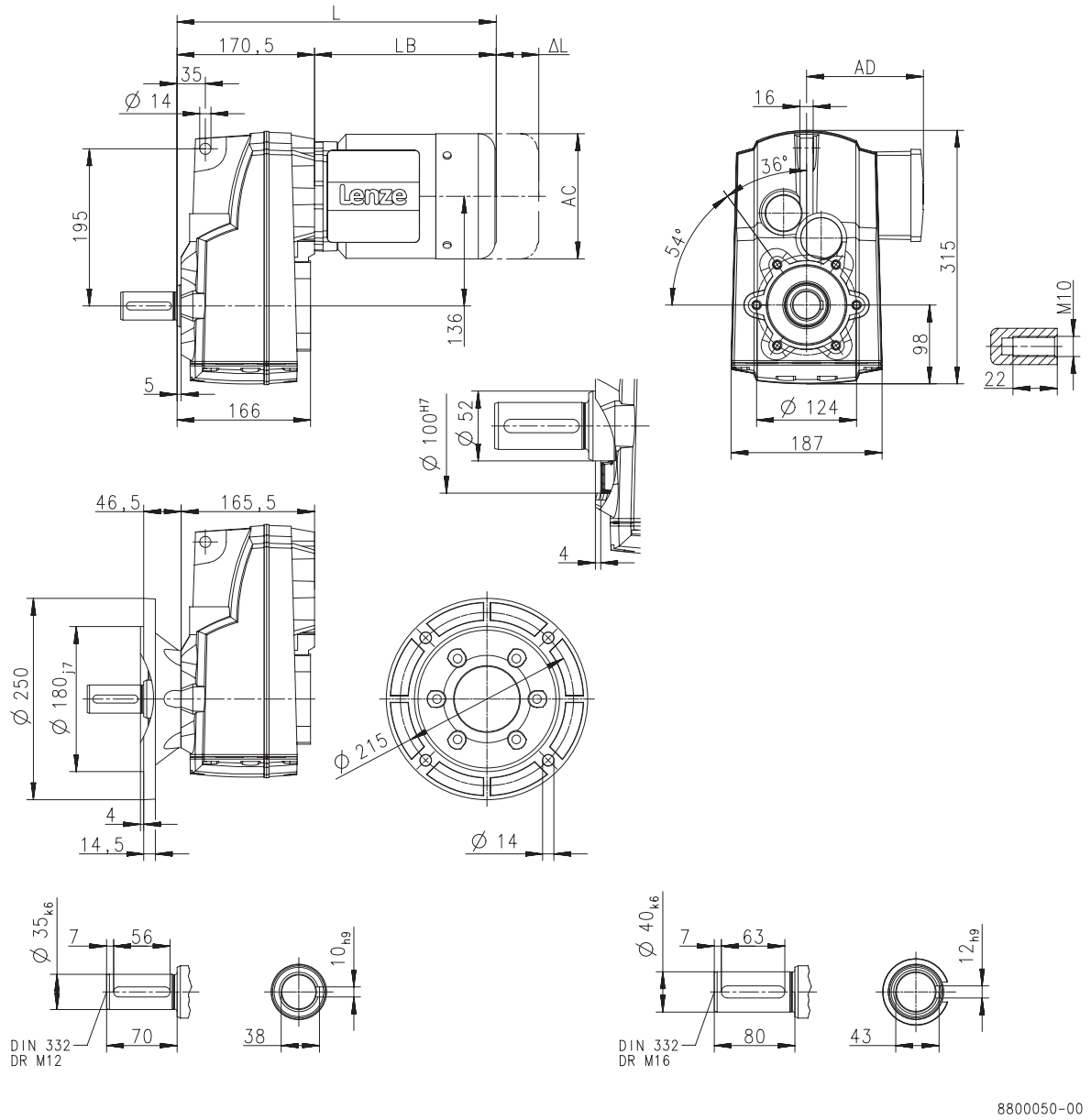

Product			MD□MA□□			
			071-13	071-33	080-13	080-33
Dimensions						
Total length	**L**	**[mm]**	374		397	
Motor length	**LB**	**[mm]**	203		226	
Length of motor options	**Δ L**	**[mm]**	165		183	
Motor diameter	**AC**	**[mm]**	139		156	
Distance motor/connection	**AD**	**[mm]**	109		150	



Dimensions, 6-pole motors

g500-S660

Dimensions with solid shaft and foot

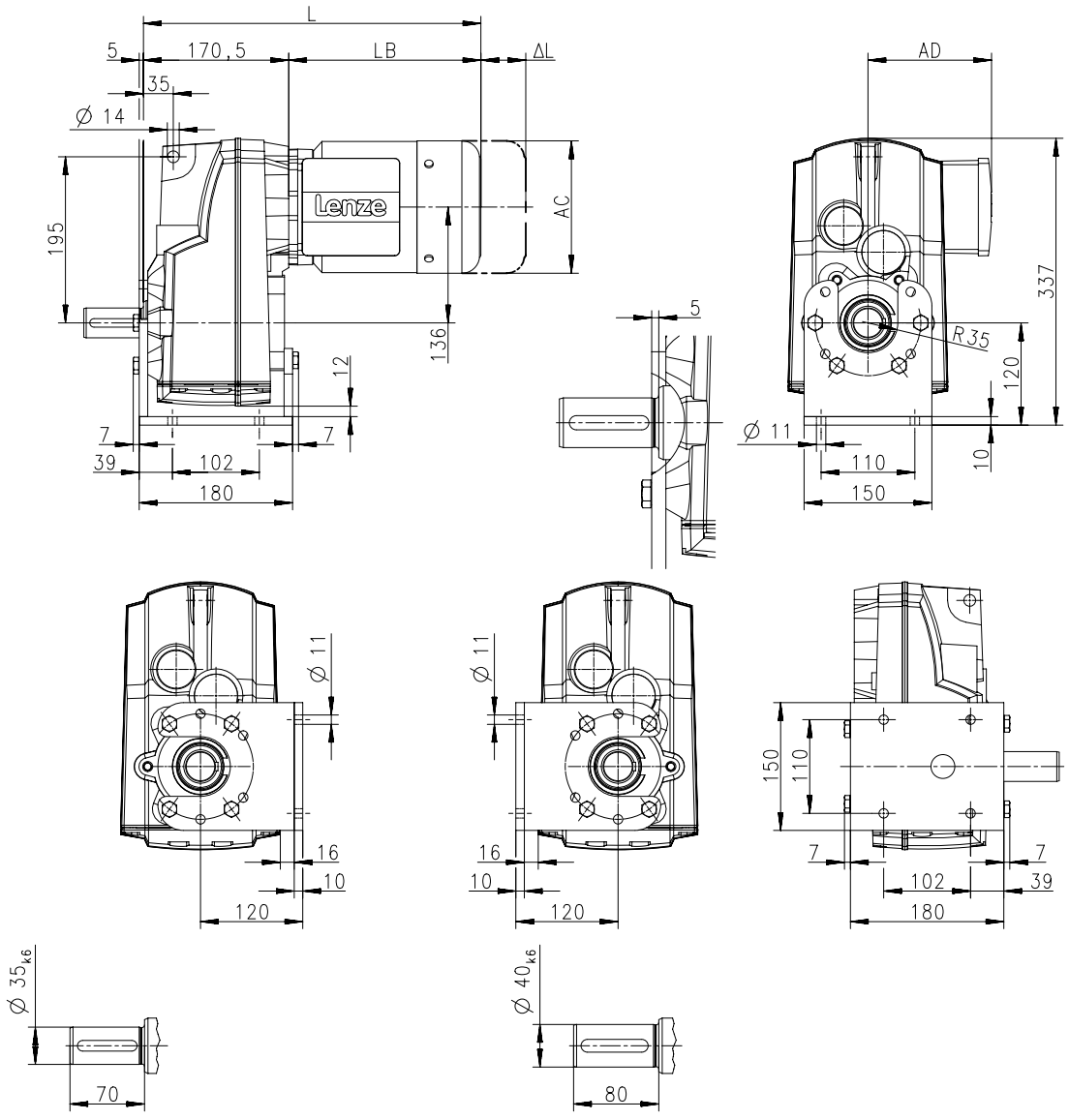

8800052-00

Product			MD□MA□□			
			071-13	071-33	080-13	080-33
Dimensions						
Total length	**L**	**[mm]**	374		397	
Motor length	**LB**	**[mm]**	203		226	
Length of motor options	**Δ L**	**[mm]**	165		183	
Motor diameter	**AC**	**[mm]**	139		156	
Distance motor/connection	**AD**	**[mm]**	109		150	



Dimensions, 6-pole motors

g500-S660

Dimensions with shrink disc

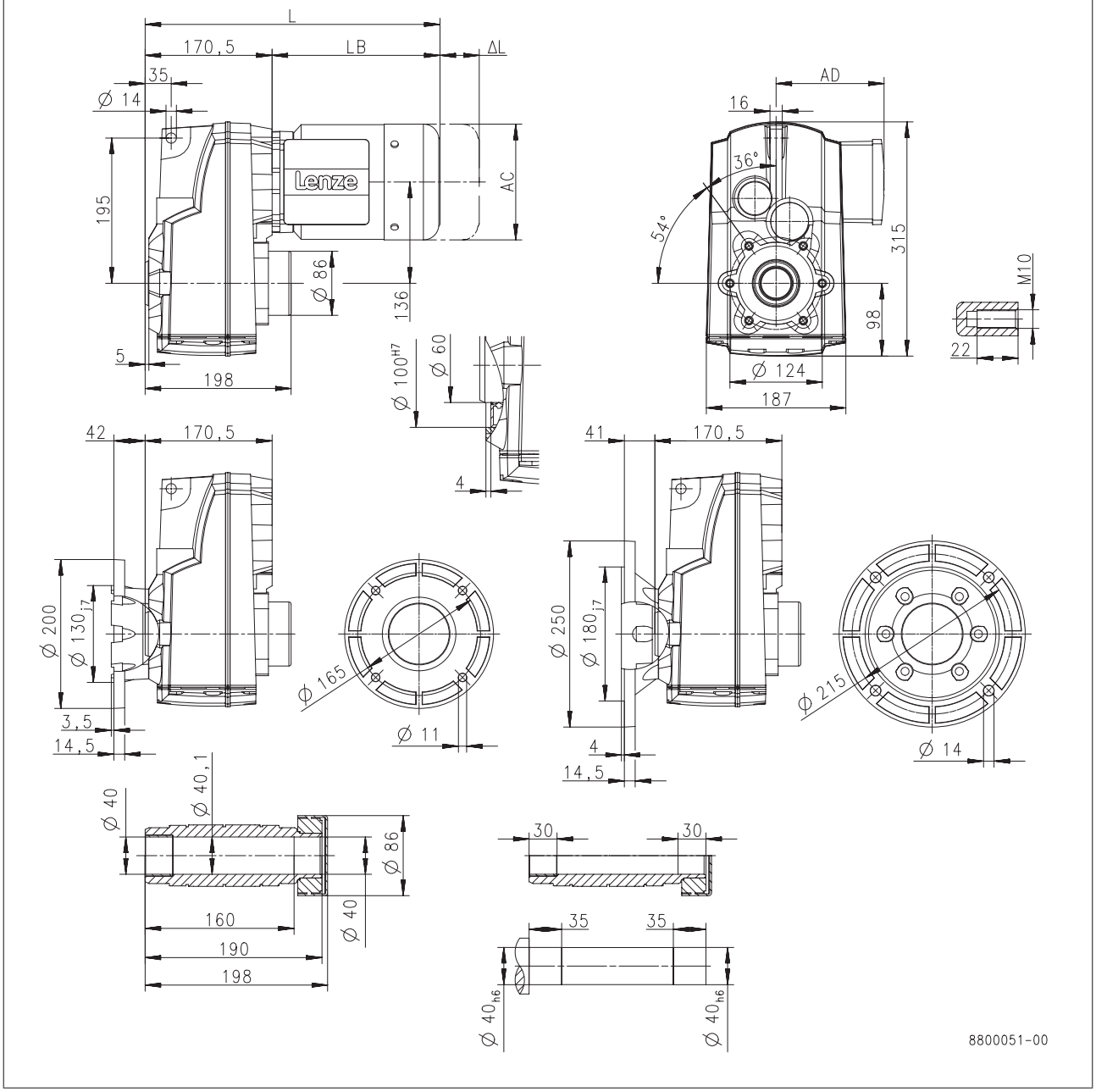

Product			MD□MA□□			
			071-13	071-33	080-13	080-33
Dimensions						
Total length	**L**	**[mm]**	374		397	
Motor length	**LB**	**[mm]**	203		226	
Length of motor options	**Δ L**	**[mm]**	165		183	
Motor diameter	**AC**	**[mm]**	139		156	
Distance motor/connection	**AD**	**[mm]**	109		150	



Weights, 4-pole motors

2-stage gearboxes

				MD□MA□□					MH□MA□□	
				063-12	063-32	063-42	071-32	071-42	080-32	090-12
g500	-S130	m	[kg]	9.2		9.5	11	12	16	21
	-S220	m	[kg]	11			12	13	17	22
	-S400	m	[kg]		14		15	16	20	25
	-S660	m	[kg]			18	20		25	30

				MH□MA□□					
				090-32	100-12	100-32	112-22	132-12	132-22
g500	-S130	m	[kg]	23					
	-S220	m	[kg]	24	30	33			
	-S400	m	[kg]	27	33	36	47		
	-S660	m	[kg]	32	38	40	52	70	77

3-stage gearboxes

				MD□MA□□				MH□MA□□		
				063-12 063-32	063-42	071-32	071-42	080-32	090-12	090-32
g500	-S220	m	[kg]	11		12		18		
	-S400	m	[kg]	14		16		21		
	-S660	m	[kg]	18	19	20	21	25	30	32

Weights, 2-pole motors

2-stage gearboxes

				MD□MA□□			
				063-11	063-31	071-11	071-31
g500	-S130	m	[kg]	9.0	8.9	11	12
	-S220	m	[kg]		10	12	13
	-S400	m	[kg]				16



Weights, 6-pole motors

2-stage gearboxes

				MD□MA□□		
				071-13	**071-33**	**080-13 080-33**
g500	**-S130**	m	[kg]	12		16
	-S220	m	[kg]	13		17
	-S400	m	[kg]	16		20
	-S660	m	[kg]		20	25

3-stage gearboxes

				MD□MA□□		
				071-13 071-33	**080-13**	**080-33**
g500	**-S220**	m	[kg]	13	18	
	-S400	m	[kg]	16	21	
	-S660	m	[kg]	21	25	



Surface and corrosion protection

For optimum protection of geared motors against ambient conditions, the surface and corrosion protection system (OKS) offers tailor-made solutions.

Various surface coatings combined with other protective measures ensure that the geared motors operate reliably even at high air humidity, in outdoor installations or in the presence of atmospheric impurities. Any colour from the RAL Classic collection can be chosen for the top coat. The geared motors are also available unpainted (no surface and corrosion protection).

Surface and corrosion protection	Applications	Measures
OKS-G (primed)	• Dependent on subsequent top coat applied	• 2K PUR priming coat (grey) • Zinc-coated screws • Rust-free breather elements Optional measures • Stainless steel nameplate
OKS-S (small)	• Standard applications • Internal installation in heated buildings • Air humidity up to 90%	• Surface coating as per corrosivity category C1 (in line with EN 12944-2) • Zinc-coated screws • Rust-free breather elements Optional measures • Stainless steel nameplate
OKS-M (medium)	• Internal installation in non-heated buildings • Covered, protected external installation • Air humidity up to 95%	• Surface coating as per corrosivity category C2 (in line with EN 12944-2) • Zinc-coated screws • Rust-free breather elements Optional measures • Stainless steel shaft • Stainless steel nameplate • Rust-free shrink disc (on request)
OKS-L (large)	• External installation • Air humidity above 95% • Chemical industry plants • Food industry	• Surface coating as per corrosivity category C3 (in line with EN 12944-2) • Blower cover and B end shield additionally primed • Cable glands with gaskets • Corrosion-resistant brake with cover ring, stainless friction plate, and chrome-plated armature plate (on request) • All screws/screw plugs zinc-coated • Stainless breather elements • Threaded holes that are not used are closed by means of plastic plugs Optional measures • Sealed recesses on motor (on request) • Stainless steel shaft • Stainless steel nameplate • Rust-free shrink disc (on request) • Additional priming coat on cast iron fan • Oil expansion tank and torque plates painted separately and supplied loose



Surface and corrosion protection

Structure of surface coating

Surface and corrosion protection	Corrosivity category	Surface coating	Colour
	DIN EN ISO 12944-2	Structure	
Without OKS(uncoated)		Dipping primed gearbox	
OKS-G (primed)		Dipping primed gearbox 2K PUR priming coat	
OKS-S (small)	C1	Dipping primed gearbox 2K-PUR top coat	Standard: RAL 7012 Optional: RAL Classic
OKS-M (medium)	C2	Dipping primed gearbox 2K PUR priming coat 2K-PUR top coat	
OKS-L (large)	C3		







g500-S shaft-mounted helical gearbox

130 to 660 Nm

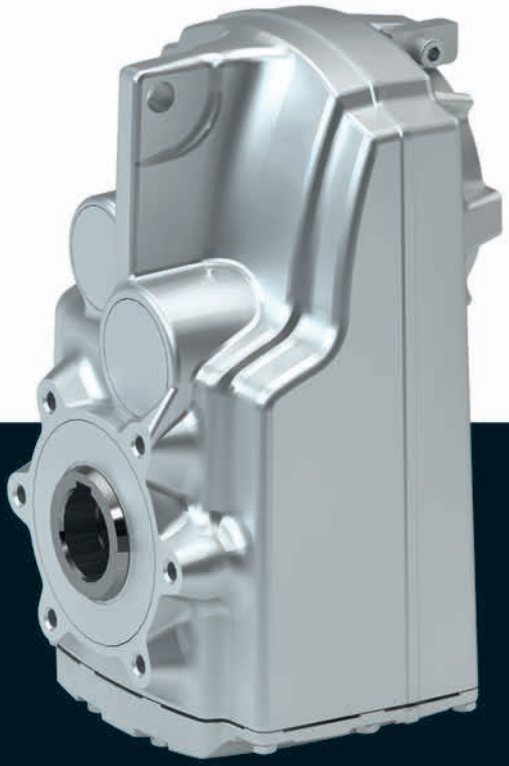

g500-S shaft-mounted helical gearbox

Contents



General information	List of abbreviations	6.5 - 5
	Product information	6.5 - 6
	Equipment	6.5 - 7
	The gearbox kit	6.5 - 8
	Functions and features	6.5 - 10
	Lubricants	6.5 - 11
	Ventilation	6.5 - 12
Technical data	Permissible radial and axial forces at output	6.5 - 15
	Moments of inertia	6.5 - 17
	Additional weights for gearboxes	6.5 - 19
Accessories	Torque plate	6.5 - 21
	Shaft cover	6.5 - 22





List of abbreviations

$F_{ax,max}$	[N]	Max. axial force
$F_{rad,max}$	[N]	Max. radial force
i		Ratio
J	[kgcm²]	Moment of inertia
m	[kg]	Mass

g500-S shaft-mounted helical gearbox

General information



Product information

The slim shaft-mounted helical gearboxes feature high reliable radial forces, closely stepped gear reductions and a low backlash. They are available in 2-pole and 3-pole design with a torque up to 660 Nm and a ratio of up to i= 495.

Versions

- Slimline design saves installation space of the machine
- Solid shaft, hollow shaft and shrink disc for direct integration into the machine
- High accuracy with axial output provide for the highest efficiency

The product name

Gearbox type	Product range		Design	Rated torque [Nm]	Product
Shaft-mounted helical gearbox	g500	-	S	130	g500-S130
				220	g500-S220
				400	g500-S400
				660	g500-S660



Equipment

Overview

The equipment includes all the options available as standard and all the built-on accessories of the product.

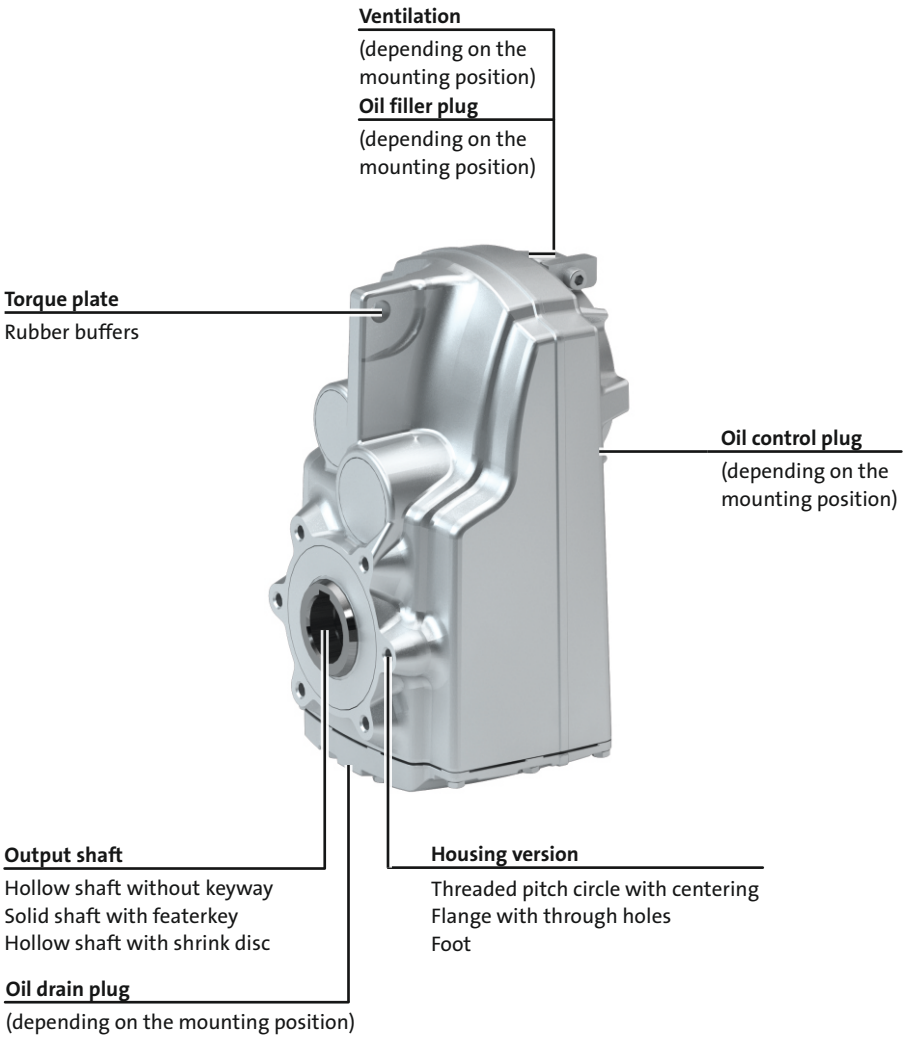



The gearbox kit

Gearbox details

Product	g500-S130	g500-S220	g500-S400	g500-S660
Driven shaft				
Solid shaft with featherkey [mm]	25x50		30x60	35x70 40x80
Hollow shaft with keyway [mm]	25	25/30	30/35	40/45
Hollow shaft with shrink disc [mm]	25	25/30	35	40
Design	Standard stainless steel			
Gasket	Standard FPM (Viton)			
Bearing	Standard			
Fitting grease	Not enclosed Enclosed			
Housing				
Housing version	With foot without centring With centering			
Output flange				
flange diameter [mm]	160		200	200/250 [1]
Lubricant				
Type	CLP 460 [2] CLP HC 320 CLP HC 220 CLP HC 220 USDA H1			
Oil-level inspection	Without inspection With inspection			
Breather element	Without		Standard mounting position: Mounted Combined mounting position: loosely enclosed	
Backlash				
Backlash	Standard			
Accessories				
Torque plate	Rubber buffers			
Shaft cover	Shrink disc: Rotating cover Shrink disc: Fixed cover			

[1] 200 mm flange diameter only possible on hollow shaft version.
[2] Not suitable for geared servo motors.

6.5

► Further information and installation feasibilities can be found in the Gearboxes chapter.



The gearbox kit

Gearbox details

Solid shaft

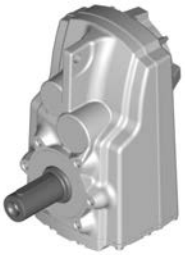

without centring

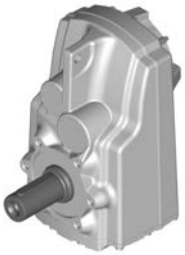

With centering



Flange with through holes

Hollow shaft



without centring



With centering



Flange with through holes

Hollow shaft with shrink disc



without centring



With centering



Flange with through holes

Accessories



Foot mounting



With rubber buffer

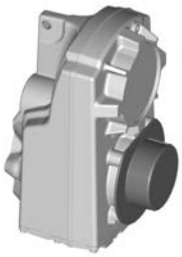

Shrink disc cover

6.5



Functions and features

Product	g500-S130	g500-S220	g500-S400	g500-S660
Housing				
Design	Cuboid			
Material	Aluminium			
Solid shaft				
Design	with keyway to DIN 6885			
Tolerance	Shaft diameter ≤ 50 mm: k6 Shaft diameter > 50 mm: m6			
Material	Tempered steel C45 Nirosta X46Cr13			
Hollow shaft				
Design	With keyway Without keyway (for shrink disc)			
Tolerance	Bore H7			
Material	Tempered steel C45 Nirosta X46Cr13			
Toothed parts				
Design	Ground tooth flanks Optimised tooth flank geometry			
Material	Case-hardened steel			
Shaft-hub joint				
	1st and 2nd step: Force-fit 3rd step: positive-fit			
Shaft sealing rings				
Design	With dust lip			
Material	NB / FP			
Bearing				
Design	Ball bearing / tapered-roller bearing depending on size and design			
Lubricants				
	Standard: mineral oil Optional: synthetic oil [1]			
Quantities	Corresponding to mounting position (see nameplate)			
Mechanical efficiency				
2-stage gearboxes [$\eta_{c=1}$]	0.96			
3-stage gearboxes [$\eta_{c=1}$]		0.95		

[1] Standard for geared servo motors.

Direction of rotation

6.5

2-stage gearboxes	3-stage gearboxes
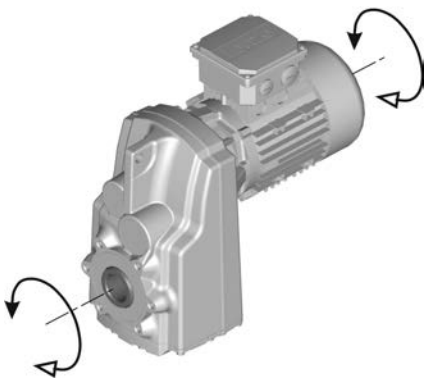	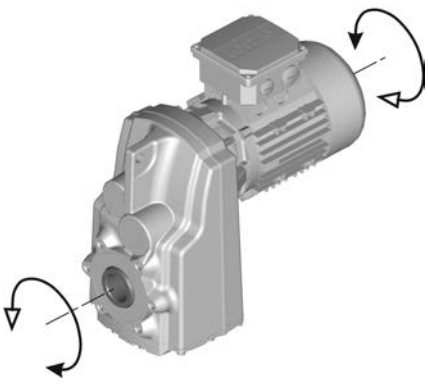



Lubricants

Lenze gearboxes and geared motors are ready for operation on delivery and are filled with lubricants specific to both the drive and the design. The mounting position and design specified in the order are key factors in choosing the volume of lubricant.

The lubricants listed in the lubricant table are approved for use in Lenze drives.

Lubricant table

Mode	CLP 460	CLP HC 320	CLP HC 220 USDA H1
Ambient temperature [°C]	0 ... +40	-25 ... +50	-20 ... +40
Specification	Mineral based oil with additives	Synthetic-based oil (synthetic hydrocarbon / poly-alpha-olefin oil)	
Changing interval	16000 operating hours not later than after three years (oil temperature 70 to 80 °C)	25000 operating hours not later than after three years (oil temperature 70 to 80 °C)	16000 operating hours not later than after three years (oil temperature 70 to 80 °C)
Fuchs	Fuchs Renolin CLP 460	Fuchs Renolin Unisyn CLP 320	bremer & leguil Cassida Fluid GL 220
Klüber	Klüberoil GEM1-460 N	Klübersynth GEM4-320 N	Klüberoil 4 UH1-220 N
Shell	Shell Omala S2 G 460	Shell Omala S4 GX HD 320	

► Please contact your Lenze sales office if you are operating at ambient temperatures in areas up to< -20 °C bzw. > or up to +40°C.

Shaft sealing rings

By default, the gearboxes come with NBR shaft sealing rings at the output end. At high speed and unfavourable ambient conditions as high temperature, reduced circulation of air etc., Lenze recommends the use of Viton shaft sealing rings.

Please consider this in your order.



Ventilation

Non-ventilated gearboxes

No ventilation is required for gearboxes g500-S130 to S220.

Ventilated gearboxes

The g500-S400 S660 gearbox is supplied with a breather element as standard.

Gearboxes in combined mounting position

To reduce the number of different versions, the gearboxes can also be ordered with combined mounting positions.
Depending on the gearbox in question, the following combinations are available:
g500-S130 to S660 in combined mounting position AEF
The breather elements are supplied loose.



Ventilation

Position of ventilation, sealing elements and oil level check

► **A ... F** mounting position

A	B
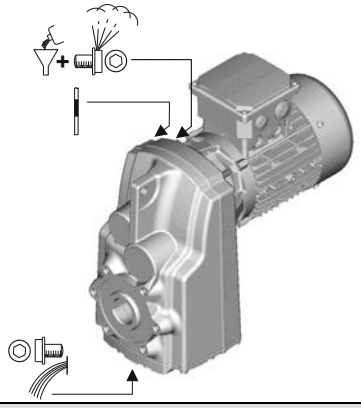	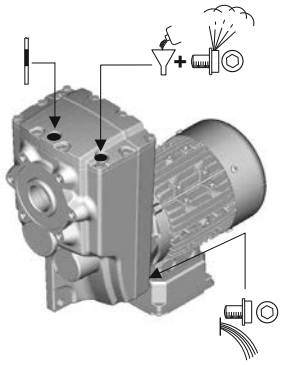
C	**D**
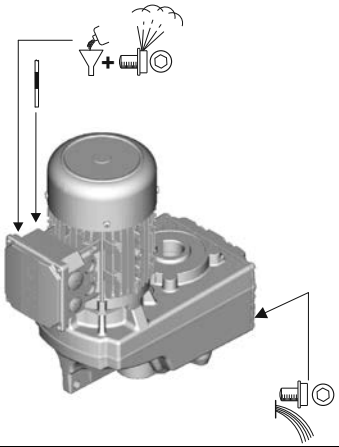	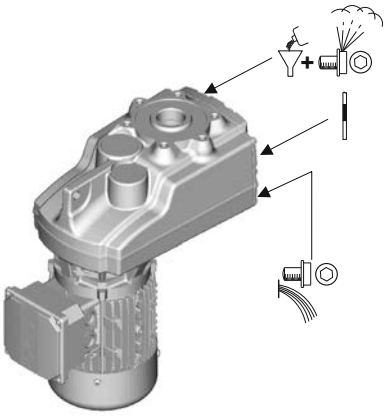
E	**F**
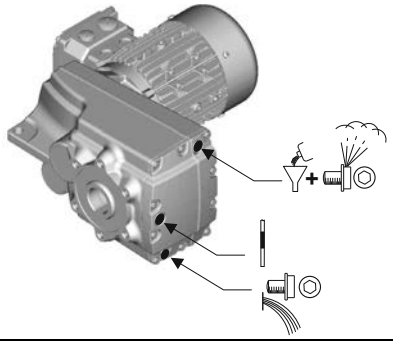	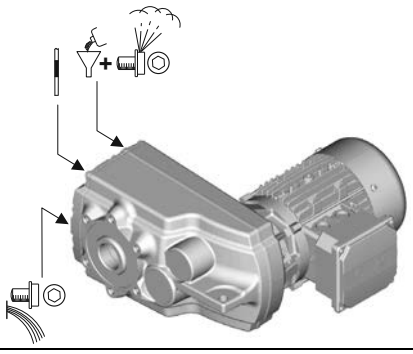

	Filling		Drain
	Ventilation		Check





Permissible radial and axial forces at output

Permissible radial force

$F_{rad,perm} = f_w \times F_{rad,max}$

► If F_{rad} **and** $F_{ax} \neq 0$, please contact Lenze.

Permissible axial force

If there is no radial force, the maximum permissible axial force is 50 % of the table value $F_{rad,max}$

Application of forces

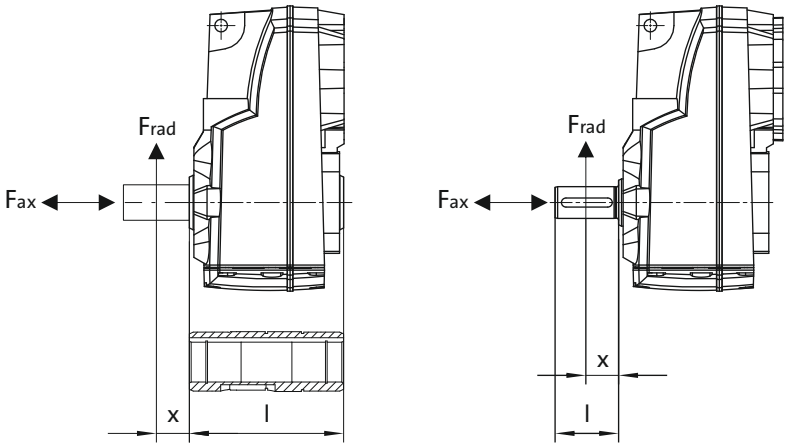

Additional load factor f_w at output shaft

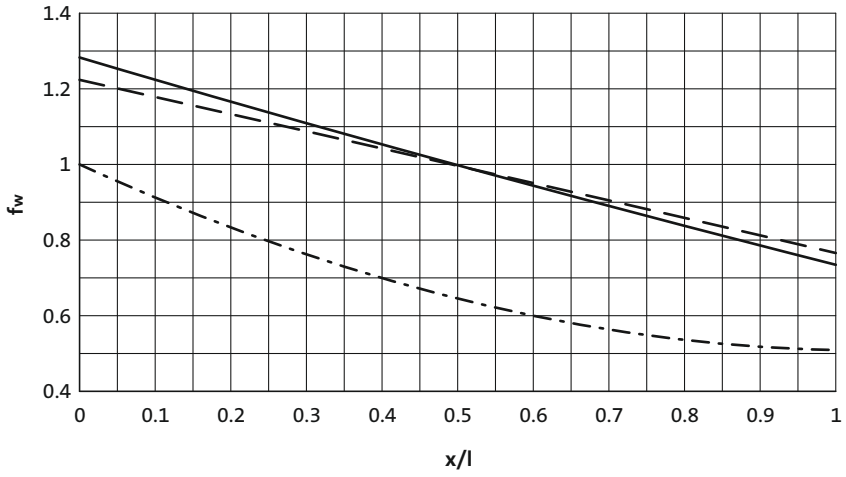

——— Solid shaft
— — — Solid shaft with flange
— · — Hollow shaft



Permissible radial and axial forces at output

The values given in the table refer to the center shaft end force application point and are minimum values calculated according to the most unfavourable conditions (force application angle, mounting position, direction of rotation). The values were calculated for the motor/gearbox combination with a load capacity of c= 1.3 and an input speed of 1400 rpm.

- If the torque is transmitted via the flange face, max 50 % of the radial force $F_{rad,max}$ are permissible.
- Neither radial nor axial forces are permissible for the hollow shaft with shrink disc.

In case of different operating conditions, considerably higher forces can be transmitted. Please contact Lenze.

Product	n_2 [r/min]									
	1000	630	400	250	160	100	63	40	25	≤16
	Max. radial force, Hollow shaft									
	$F_{rad,max}$	$F_{rad,max}$	$F_{rad,max}$	$F_{rad,max}$	$F_{rad,max}$	$F_{rad,max}$	$F_{rad,max}$	$F_{rad,max}$	$F_{rad,max}$	$F_{rad,max}$
	[N]	[N]	[N]	[N]	[N]	[N]	[N]	[N]	[N]	[N]
g500-S130	1000	1150	1350	1500	1650	2200	2750	3450	4200	4500
g500-S220	2100	2700	2800	3200	3800	4600	5500	6300	7000	7000
g500-S400	1800	2400	3000	3400	4100	5000	6000	7100	8000	8000
g500-S660	2400	3300	4300	4700	5000	6600	8500	10800	12000	12000
	Max. radial force, Solid shaft without flange									
	$F_{rad,max}$	$F_{rad,max}$	$F_{rad,max}$	$F_{rad,max}$	$F_{rad,max}$	$F_{rad,max}$	$F_{rad,max}$	$F_{rad,max}$	$F_{rad,max}$	$F_{rad,max}$
	[N]	[N]	[N]	[N]	[N]	[N]	[N]	[N]	[N]	[N]
g500-S130	1000	1150	1350	1500	1650	2200	2750	3450	4200	4500
g500-S220	1650	2100	2300	2700	3200	3600	3600	3600	3600	3600
g500-S400	1400	1900	2400	2700	3200	4000	4800	5800	6200	6200
g500-S660	1850	2500	3200	3600	3900	5100	6500	8400	9000	9000
	Max. radial force, Solid shaft with flange									
	$F_{rad,max}$	$F_{rad,max}$	$F_{rad,max}$	$F_{rad,max}$	$F_{rad,max}$	$F_{rad,max}$	$F_{rad,max}$	$F_{rad,max}$	$F_{rad,max}$	$F_{rad,max}$
	[N]	[N]	[N]	[N]	[N]	[N]	[N]	[N]	[N]	[N]
g500-S130	1000	1150	1350	1500	1650	2200	2750	3450	4200	4500
g500-S220	2300	2800	3200	3700	4400	4600	4600	4600	4600	4600
g500-S400	2900	3700	4300	5100	5900	6800	7000	7000	7000	7000
g500-S660	4000	5000	6100	7000	7800	9600	10000	10000	10000	10000



Moments of inertia

- The moments of inertia relate to the drive shaft of the gearbox.
- The total moment of inertia is calculated by adding the values of the gearbox, motor and accessories.

2-stage gearboxes

Product	Ratio	Moment of inertia
	i	J
		[kgcm²]
g500-S130	3.661	1.56
	5.021	0.89
	6.425	0.57
	7.029	0.49
	8.322	0.69
	9.411	1.03
	11.413	0.42
	12.907	0.60
	14.606	0.29
	15.979	0.25
	18.069	0.34
	20.381	0.17
	23.048	0.23
	24.967	0.13
	28.233	0.17
	31.387	0.087
	35.493	0.11
	40.422	0.059
	45.711	0.074
	51.230	0.039
	57.933	0.048
	64.200	0.027
	72.600	0.032
	84.581	0.016
	95.648	0.019
g500-S220	3.840	2.60
	5.267	1.54
	6.767	1.64
	7.667	1.50
	9.280	1.04
	10.514	0.96
	11.876	0.72
	12.992	0.62
	13.456	0.67
	14.720	0.58
	16.571	0.44
	18.776	0.42
	20.300	0.34
	23.000	0.32
	26.422	0.21
	29.937	0.20
	32.867	0.15
	37.238	0.14
	42.533	0.095
	48.190	0.091
	51.620	0.069
	58.486	0.067
	65.975	0.044
	74.750	0.043

Product	Ratio	Moment of inertia
	i	J
		[kgcm²]
g500-S400	3.339	5.16
	4.579	2.91
	5.860	1.86
	6.411	1.58
	7.467	2.18
	8.436	1.95
	10.240	1.32
	11.569	1.20
	13.105	0.89
	14.336	0.77
	14.806	0.82
	16.197	0.70
	18.286	0.53
	20.659	0.49
	22.400	0.40
	25.308	0.37
	29.156	0.24
	32.940	0.23
	36.267	0.17
	40.974	0.16
	46.933	0.11
	53.026	0.10
	56.960	0.079
	64.354	0.074
g500-S660	3.920	8.80
	5.376	5.26
	6.417	5.48
	6.880	3.48
	7.311	4.90
	8.800	3.50
	10.027	3.19
	11.262	2.41
	12.320	2.12
	12.832	2.22
	14.037	1.96
	15.714	1.51
	17.905	1.42
	19.250	1.15
	21.933	1.09
	25.056	0.65
	28.548	0.61
	31.167	0.47
	35.511	0.44
	40.333	0.29
	45.956	0.28
	48.950	0.21
	55.773	0.20



Moments of inertia

3-stage gearboxes

Product	Ratio	Moment of inertia
	i	J
		[kgcm²]
g500-S220	40.012	0.20
	45.333	0.20
	52.587	0.13
	59.581	0.13
	67.298	0.092
	76.249	0.091
	86.079	0.062
	97.528	0.061
	111.747	0.044
	126.610	0.043
	143.205	0.030
	162.252	0.030
	241.022	0.014
	273.079	0.014
	312.233	0.003
	353.762	0.003
	398.508	0.006
	451.512	0.006
g500-S400	58.027	0.14
	65.559	0.14
	74.260	0.098
	83.900	0.095
	94.984	0.066
	107.314	0.064
	123.307	0.046
	139.313	0.045
	158.019	0.032
	178.531	0.031
	204.412	0.021
	230.946	0.021
	265.956	0.014
	300.479	0.014
	344.533	0.004
	389.256	0.004
	439.733	0.006
	496.814	0.006

Product	Ratio	Moment of inertia
	i	J
		[kgcm²]
g500-S660	49.867	0.39
	56.818	0.38
	63.817	0.27
	69.813	0.23
	72.713	0.26
	79.545	0.23
	89.048	0.17
	101.460	0.16
	109.083	0.13
	124.289	0.12
	137.133	0.083
	156.249	0.082
	176.611	0.056
	201.230	0.056
	223.833	0.037
	255.034	0.037
	280.500	0.026
	319.600	0.025
	369.548	0.016
	421.060	0.015



Additional weights for gearboxes

Product			g500-S130	g500-S220	g500-S400	g500-S660
Mass						
Solid shaft	m	[kg]	0.5	0.5	1.7	2.5
Shrink disc	m	[kg]	0.2	0.4	0.6	0.6
Foot	m	[kg]	1.7	1.8	3.3	4.3
Flange	m	[kg]	0.4	0.4	0.9	1.7





Torque plate

The torque is usually supported via the foot or the flange.
Another simple option is the integrated torque plate at the housing. Here, the torque is supported only via one point and is, among other things, suitable for shaft-mounted gearboxes. Moreover, the suitable rubber buffers provide for a low-tension installation and absorb slight shocks.

The rubber buffers can be ordered optionally.

Rubber buffer for torque plate

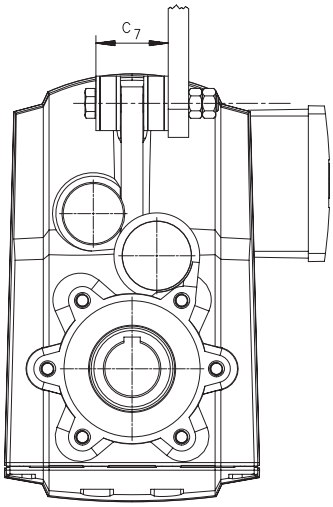

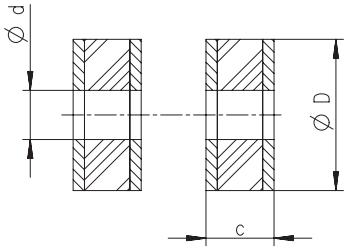

6.5

Product	Dimensions				Mass
	d	D	c	c_7	m
	[mm]	[mm]	[mm]	[mm]	[kg]
g500-S130	11.0	30.0	17.0	45.0	0.050
g500-S220	11.0	30.0	17.0	45.0	0.050
g500-S400	13.0	40.0	18.0	49.0	0.10
g500-S660	13.0	40.0	18.0	52.0	0.10



Shaft cover

Shrink disc cover

The cover is provided for the shrink disc to be protected from contact.

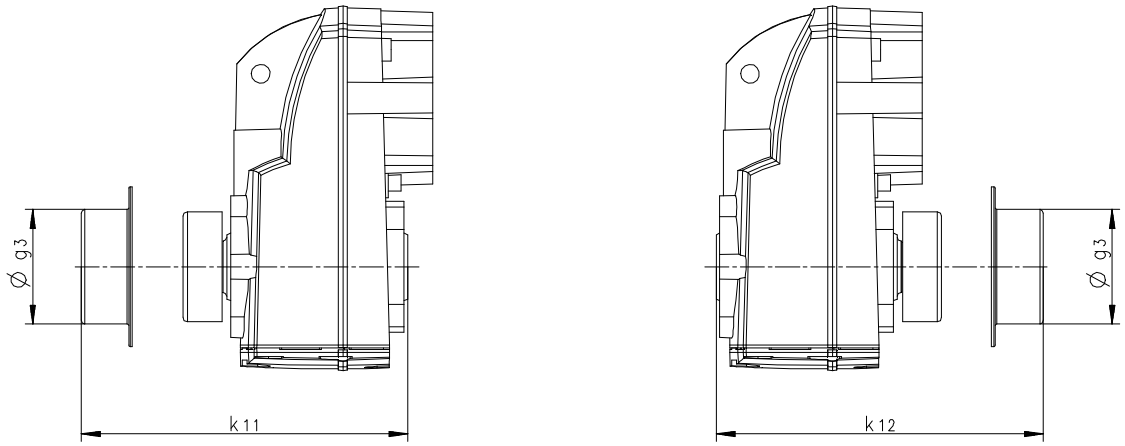

Product	Dimensions			Mass
	g_3	k_{11}	k_{12}	m
	[mm]	[mm]	[mm]	[kg]
g500-S130	63.0	132	132	0.050
g500-S220	76.0	152	152	0.050
g500-S400	90.0	182	182	0.050
g500-S660	90.0	200	202	0.050





g500-B bevel geared motors

0.06 to 0.55 kW
0.75 to 3 kW (efficiency class IE2)

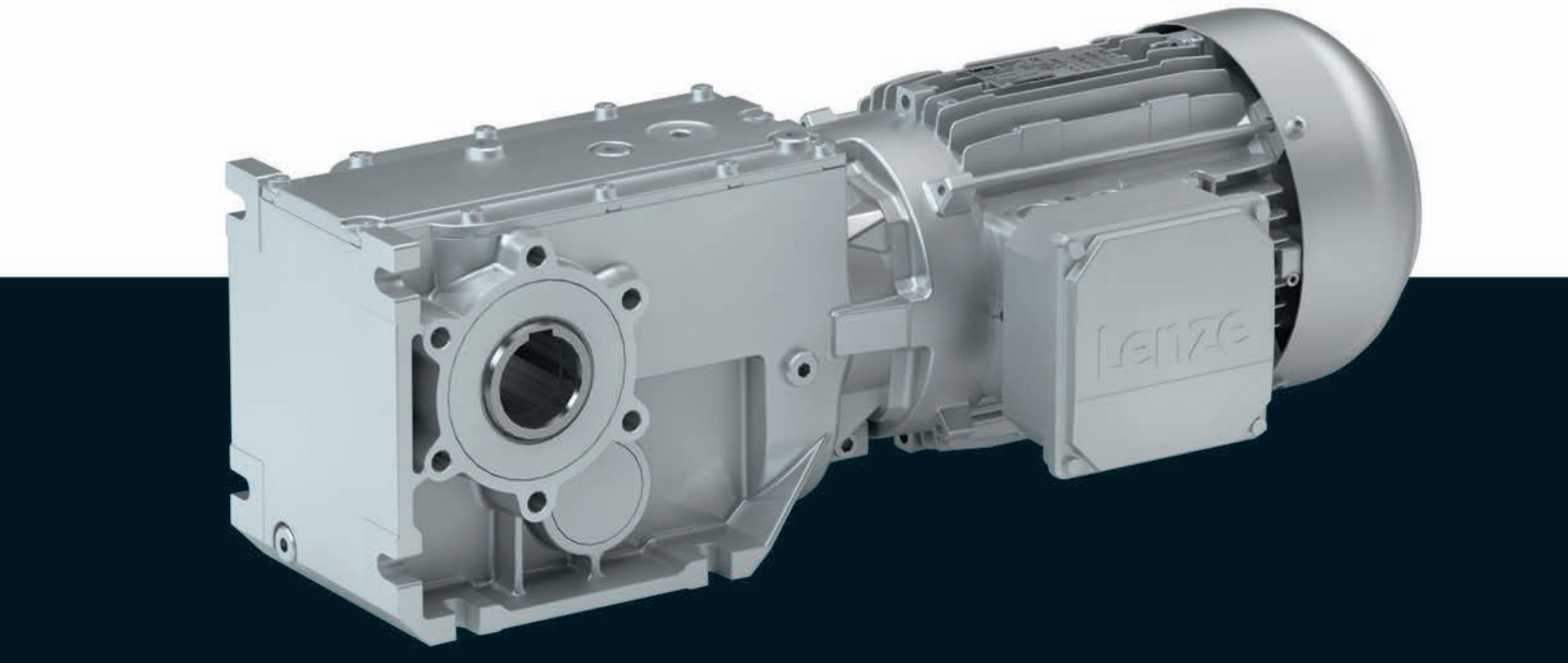

g500-B bevel geared motors

Contents



General information	List of abbreviations	6.7 - 5
	Product information	6.7 - 6
	Equipment	6.7 - 7
	The gearbox kit	6.7 - 8
	Dimensioning	6.7 - 14
Technical data	Selection tables, notes	6.7 - 19
	Selection tables, 4-pole motors	6.7 - 21
	Selection tables, 2-pole motors	6.7 - 39
	Selection tables, 6-pole motors	6.7 - 44
	Dimensions, notes	6.7 - 50
	Dimensions, 4-pole motors	6.7 - 51
	Dimensions, 2-pole motors	6.7 - 63
	Dimensions, 6-pole motors	6.7 - 72
	Weights, 4-pole motors	6.7 - 81
	Weights, 2-pole motors	6.7 - 81
	Weights, 6-pole motors	6.7 - 81
	Surface and corrosion protection	6.7 - 82

Contents





List of abbreviations

c		Load capacity
i		Ratio
m	[kg]	Mass
M_2	[Nm]	Output torque
M_{22}	[Nm]	Output torque
$M_{a_,1}$	[Nm]	Starting torque
$M_{a_,2}$	[Nm]	Starting torque
n_2	[r/min]	Output speed
n_{21}	[r/min]	Output speed
n_{22}	[r/min]	Output speed

CCC	China Compulsory Certificate
CE	Communauté Européenne
CSA	Canadian Standards Association
cURus	Combined certification marks of UL for the USA and Canada
DIN	Deutsches Institut für Normung e.V.
EMC	Electromagnetic compatibility
EN	European standard
GOST	Certificate for Russian Federation
IEC	International Electrotechnical Commission
IM	International Mounting Code
IP	International Protection Code
NEMA	National Electrical Manufacturers Association
UL	Underwriters Laboratory Listed Product
UR	Underwriters Laboratory Recognized Product
VDE	Verband deutscher Elektrotechniker (Association of German Electrical Engineers)



Product information

In combination with three-phase AC motors, our bevel gearboxes form a compact and powerful drive unit. Numerous options at the input and output end provide for the drive to be exactly adapted to your application.

The efficient bevel gearboxes feature high reliable radial forces, closely stepped gear reductions and a low backlash. They are available in 2-pole and 3-pole design with a torque up to 450 Nm and a ratio of up to i= 360.

Versions

- High-efficient right-angle gearbox in a compact design for space-saving installation
- Standardised shaft and flange dimensions for an easy machine integration
- Low backlash and high torsional stiffness provide for exact results in positioning applications
- With three-phase AC motors in the power range 0.06 ... 0.55 kW
  With IE2 three-phase AC motors in the power range 0.75 ... 3 kW

Inverters for motor-proximity installation

The Drive Package with decentralised Inverter Drives 8400 motec covers a power range up to 3 kW.

The product name

Gearbox type	Product range		Design	Rated torque [Nm]	Product
Bevel gearbox	g500	-	B	45	g500-B45
				110	g500-B110
				240	g500-B240
				450	g500-B450



Equipment

Overview

The equipment includes all the options available as standard and all the built-on accessories of the product.

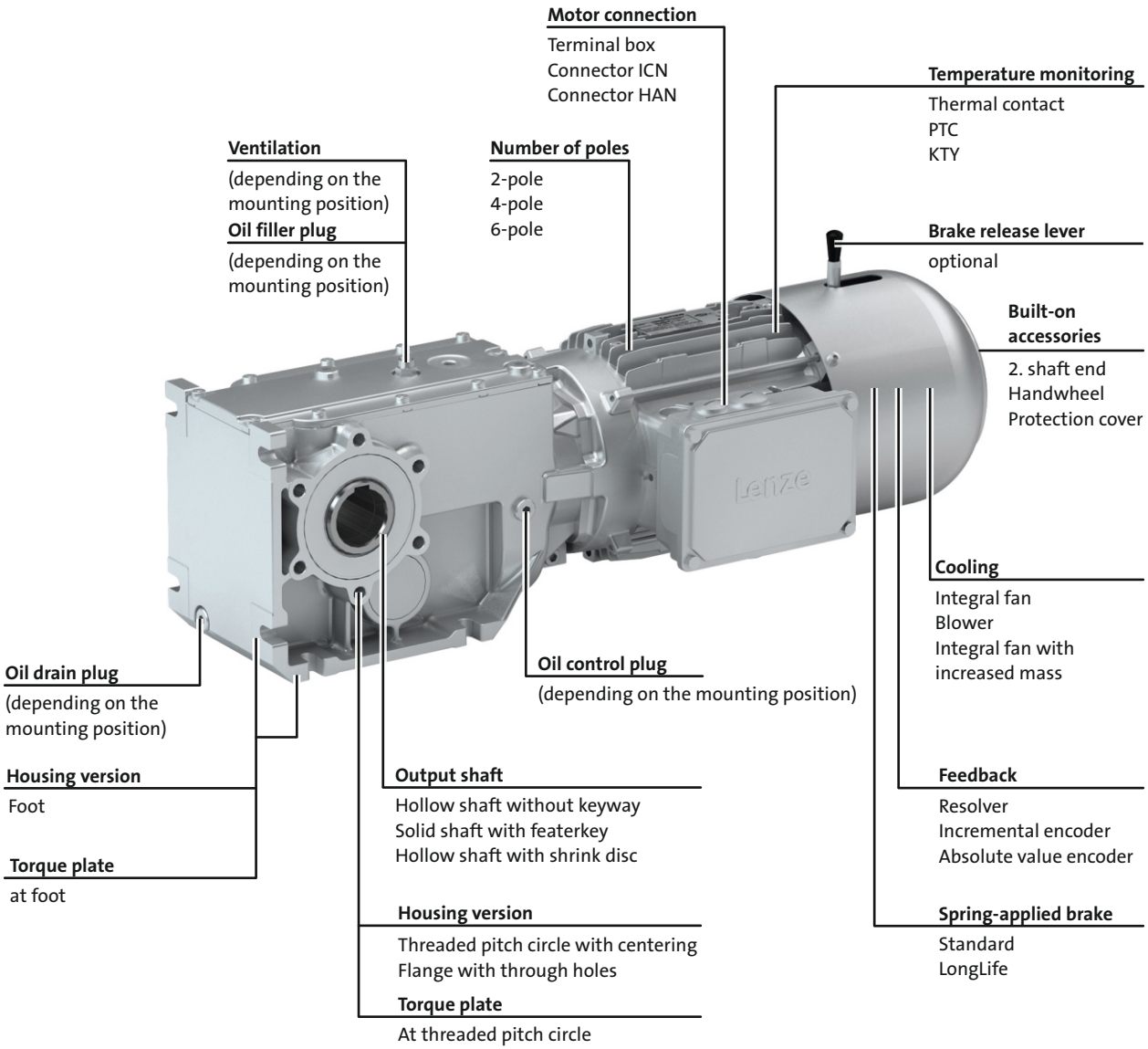



The gearbox kit

Geared motor

Product	g500-B45	g500-B110	g500-B240	g500-B450
Motor type				
Efficiency class IE1				
Efficiency class IE2	MH□MA AC motor			
4-pole motor				
0.06 - 0.09 kW	063			
0.12 - 0.25 kW	063			
0.37 - 0.55 kW	071			
0.75 kW		080		
1.1 - 1.5 kW		090		
2.2 - 3.0 kW			100	
4.0 kW				112
5.5 - 7.5 kW				
2-pole motor				
0.18 - 0.25 kW		063		
0.37 - 0.55 kW		071		
6-pole motor				
0.18 - 0.25 kW		071		
0.37 - 0.55 kW		080		
Technical data				
Rated power	See selection table			
Mains voltage	230/400 V ; 230 V; 460 V			
Mains frequency	50 Hz; 60 Hz; 60 Hz			
Output torque	See selection table			
Output speed	See selection table			
Ratio	See selection table			
Load capacity	See selection table			
Mounting position				
Standard	A/B/C/D/E/F			
Combined	ABCDEF	AEF		
Colour				
	Not coated Primed Paint in various corrosion-protection designs in accordance with RAL colours			
Surface and corrosion protection				
	Without OKS(uncoated) OKS-G (primed) OKS-S (small) OKS-M (medium) OKS-L (large)			



The gearbox kit

Mounting positions

► Mounting position (A to F) and position of system blocks (1 to 6)

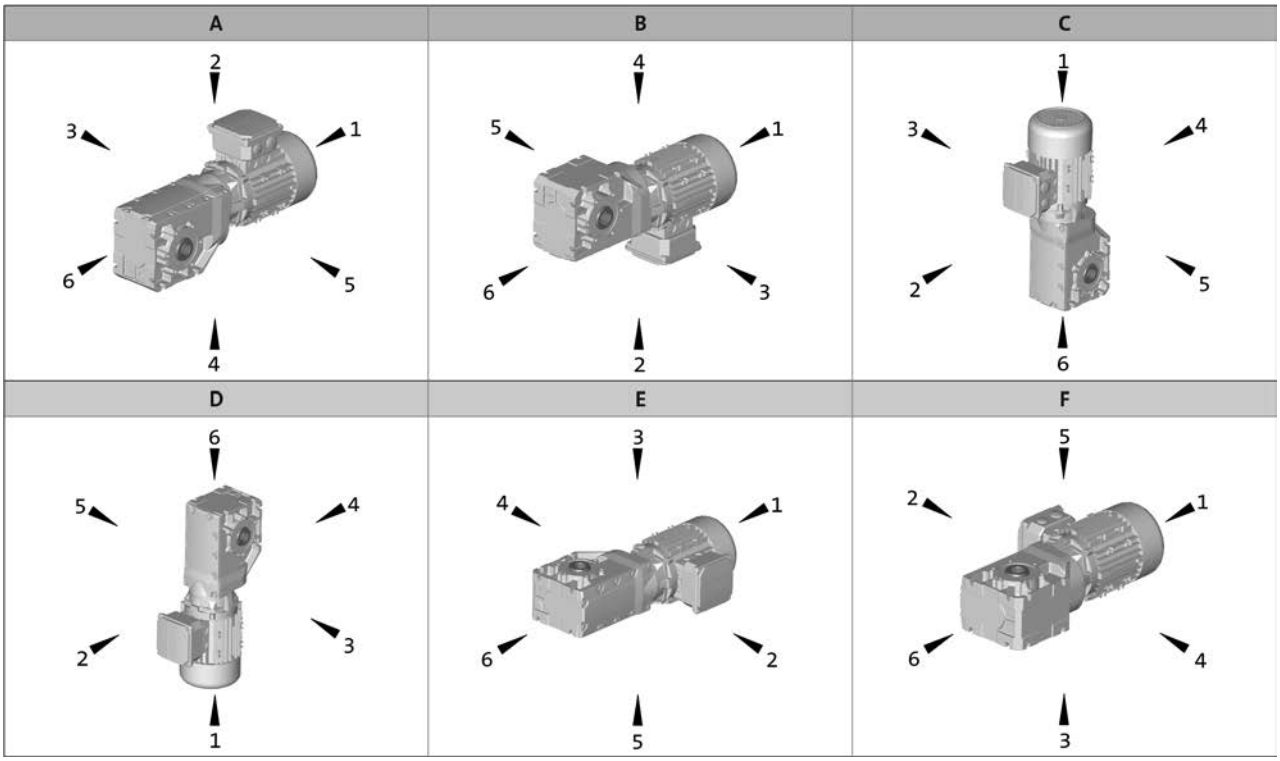

Hollow shaft: 0
Solid shaft: 3, 5, 8 (3+5)
Hollow shaft with shrink disc: 3, 5

Without flange: 0
Flange: 3, 5, 8 (3+5)
Terminal box / motec: 2, 3, 4, 5



The gearbox kit

Motor details

Product	MD□MA□□				MH□MA□□				
	063-02 063-22 063-11 063-12 063-31 063-32 063-42	071-11 071-12 071-13 071-31 071-32 071-33	071-42	080-13 080-33	080-32	090-12	100-12 100-32	112-22	132-12 132-22
Connection type	Terminal box ICN connector HAN-10E connector HAN-Modular connector								
Spring-applied brake									
Rated torque [Nm]	4		4 8	8 16			16 32	32 60	60 80
Brake voltage [V]	DC 24/180/205 AC 230/400/460								
Brake design	Standard LongLife								
	Standard Overexcited Cold Brake								
Options	Manual release lever Low noise With cover ring								
Feedback	With absolute value encoder With incremental encoder With resolver								
Cooling	Without blower/integral fan Blower Integral fan with increased mass								
Temperature monitoring	TKO thermal contact KTY83-110 thermal detector KTY84-130 thermal detector PTC thermistor								
Approval	cURus CCC								
Degree of protection	IP55								
Further options	Protection cover 2nd shaft end Handwheel								

► Further information and installation feasibilities can be found in the Motors chapter.



The gearbox kit

Motor details

Connection type



Terminal box



ICN connector



HAN connector

Cooling: integral fan



Without built-on accessories

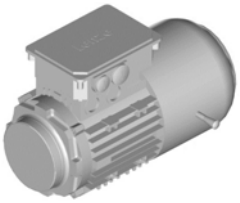

With spring-applied brake
With or without manual release lever

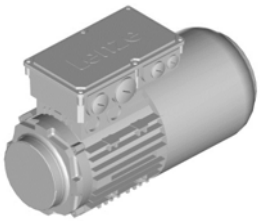

With feedback
With feedback and spring-applied brake

Cooling: blower

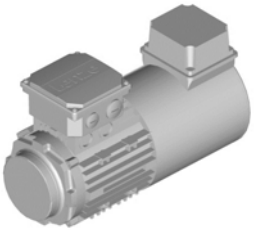

Without built-on accessories

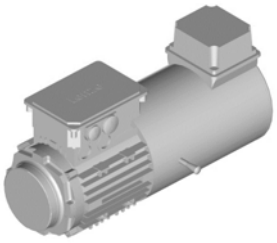

With spring-applied brake
With or without manual release lever

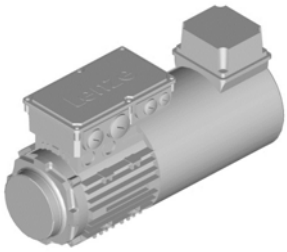

With feedback
With feedback and spring-applied brake

Further options



With 2nd shaft end
Only integral fan

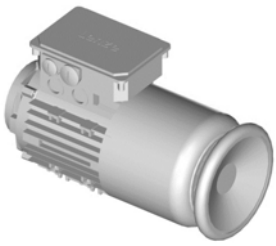

With handwheel
Only integral fan

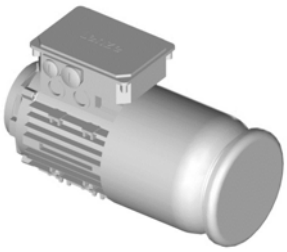

With protection cover



The gearbox kit

Gearbox details

Product	g500-B45	g500-B110	g500-B240	g500-B450
Driven shaft				
Solid shaft without keyway [mm]				
Solid shaft with featherkey [mm]	20x40		30x60	
Hollow shaft with keyway [mm]	18/20	20/25	30/35	35/40
Hollow shaft with shrink disc [mm]	20		30/35	35
Design	Standard stainless steel			
Gasket	Standard FPM (Viton)			
Bearing	Standard			
Fitting grease	Not enclosed Enclosed			
Housing				
Housing version	With foot With foot and centering			
Output flange				
flange diameter [mm]	110/120	120/160	160/200	200
Lubricant				
Type	CLP 460 [1)] CLP HC 320 CLP HC 220 CLP HC 220 USDA H1			
Oil-level inspection	Without inspection			Without inspection With inspection
Breather element	Without			Standard mounting position: Mounted Combined mounting position: loosely enclosed
Backlash				
Backlash	Standard			
Accessories				
Torque plate	Rubber buffers At threaded pitch circle	At threaded pitch circle	At threaded pitch circle At foot	At foot
Shaft cover	Hollow shaft Shrink disc: Rotating cover Shrink disc: Fixed cover			

[1)] Not suitable for geared servo motors.

► Further information and installation feasibilities can be found in the Gearboxes chapter.



The gearbox kit

Gearbox details

Solid shaft



Foot mounting
without centring



Foot mounting
With centering



Flange with through holes

Hollow shaft



Foot mounting
without centring



Foot mounting
With centering



Flange with through holes

Hollow shaft with shrink disc



Foot mounting
without centring



Foot mounting
With centering

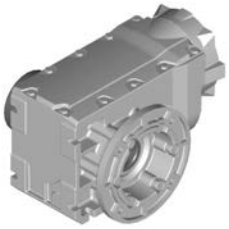

Flange with through holes

Accessories



2nd output shaft end



Torque plate
at foot



Torque plate
at threaded pitch circle

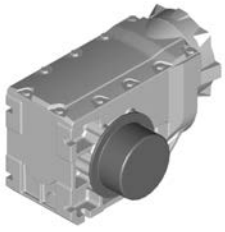

Cover
Hollow shaft/shrink disc



Dimensioning

General information about the data provided in this catalogue

The powers, torques and speeds specified in this catalogue are rounded values and are valid under the following conditions:

- Operating time/day = 8 h (100% OT)
- Duty class I for up to 10 switching operations/h
- Mounting positions and designs in this catalogue
- Standard lubricant
- T_{amb} = 20 °C for gearboxes,
  T_{amb} = 40 °C for motors (in accordance with EN 60034)
- Site altitude < = 1000 m amsl
- The selection tables provide the permissible mechanical powers and torques. For notes on the thermal power limit, see chapter drive dimensioning.
- The rated power specified for motors and geared motors applies to operating mode S1 (in accordance with EN 60034).

Under different operating conditions, the values obtained may vary from those listed here.
In the case of extreme operating conditions, please consult your Lenze sales office.



Dimensioning

Thermal power limit

The thermal power limit, defined by the heat balance, limits the permissible gearbox continuous power. It may be less than the mechanical power ratings listed in the selection tables.

The thermal power limit is affected by:
- the churning losses in the lubricant. These are determined by the mounting position and the circumferential speed of the gears;
- the load and the speed
- the ambient conditions: temperature, air circulation, input or dissipation via shafts and the foundation

If the following input speeds n_1 are exceeded, please contact Lenze:

Motor frame size	Mounting position A, B, E, F	Mounting position C, D
063 ... 100	4000 r/min	3000 r/min
112 ... 132	3000 r/min	1500 r/min

► For a short period of time up to 5 min, 30 % higher speeds are permissible

Possible ways of extending the application area

- synthetic lubricant (option)
- shaft sealing rings made from FP material/Viton (option)
- reduction in lubricant quantity
- cooling of the geared motor by means of air convection on the machine/system



Dimensioning

Load capacity and application factor

Load capacity c of gearbox
Rated value for the load capacity of Lenze geared motors.
- c is the ratio of the permissible rated torque of the gearbox to the rated torque supplied by the drive component (e.g. the built-in Lenze motor).
- The value of c must always be greater than the value of the application factor k calculated for the application.

Application factor k (according to DIN 3990)
Takes into account the influence of temporally variable loads which are actually present during the anticipated operating time of gearboxes and geared motors.
k is determined by:
- the type of load
- the load intensity
- temporal influences

Duty class	Load type
I	Smooth operation, small or light jolts
II	Uneven operation, average jolts
III	Uneven operation, severe jolts and/or alternating load

Application factor k

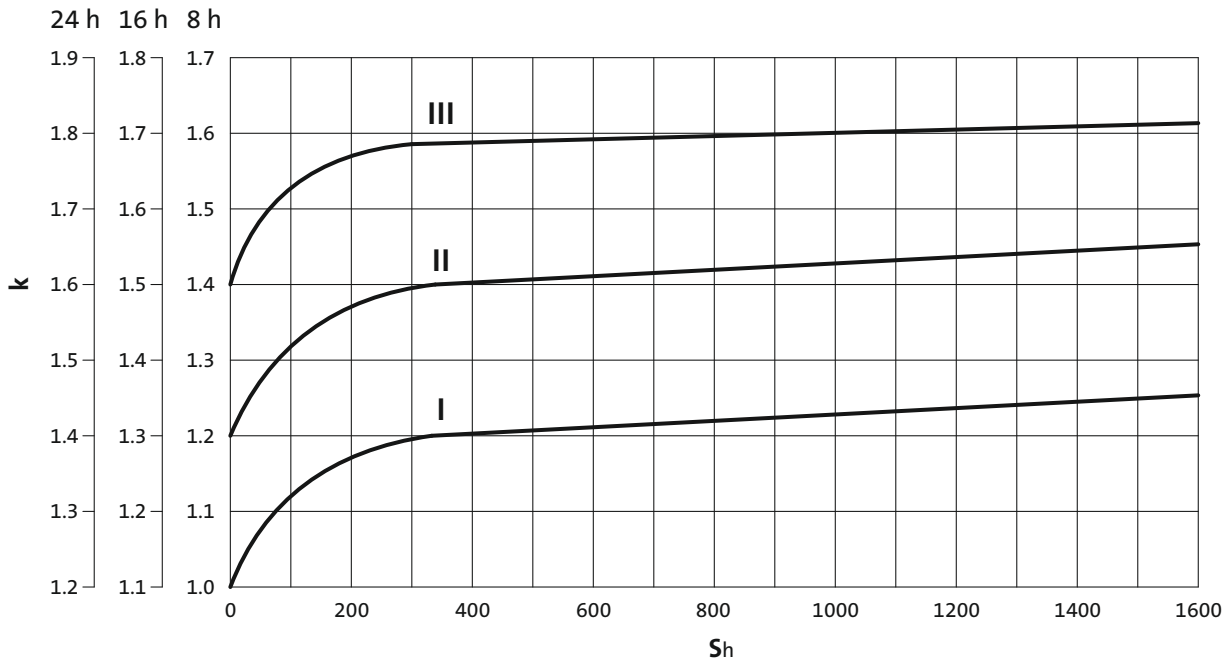

► S_h= switchings/h



Dimensioning

Torque derating at low motor frequencies

Motor size-dependent torque reduction, taking into account the thermal response during operation on the inverter.

Torque characteristics

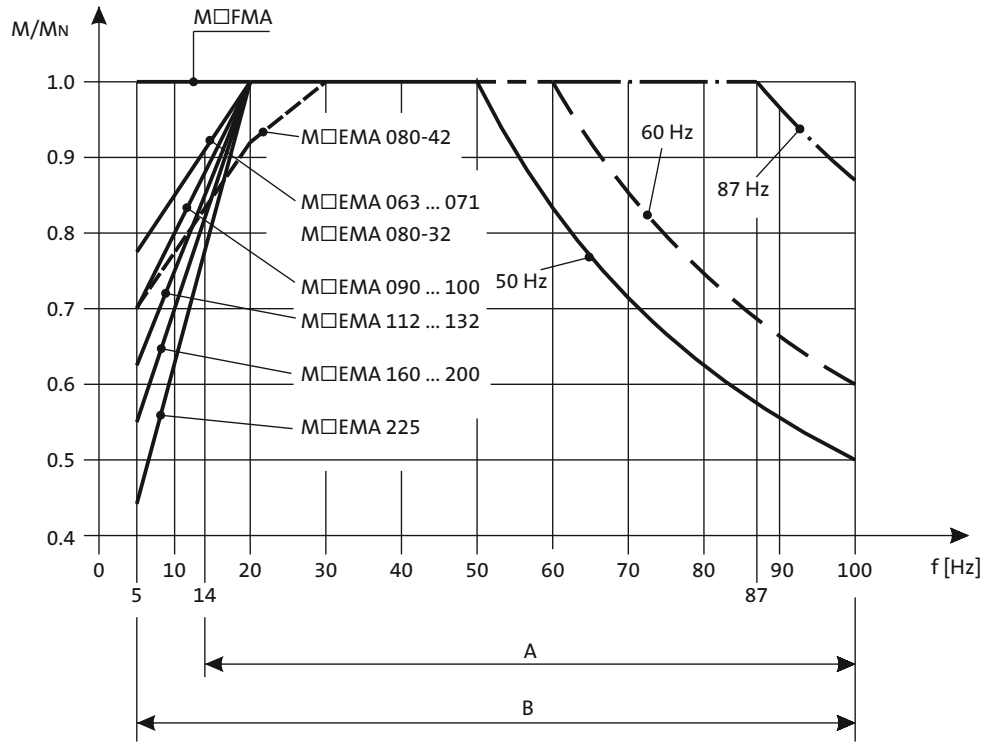

A = Operation with integral fan and brake
B = Operation with integral fan and brake control "Holding current reduction"

You can use the Drive Solution Designer for precise drive dimensioning.

The Drive Solution Designer helps you to carry out a fast and high-quality drive dimensioning.
The software includes well-founded and proven knowledge on drive applications and electro-mechanical drive components.

Please contact your Lenze sales office.



Dimensioning

Weights

The values given in the tables consider the following gearbox/motor combination:
- Gearbox with hollow shaft without flange including lubricant amount for mounting position A
- Motor without built-on accessories (with integral fan)

For versions deviating from this, additional weights have to be considered.

The respective values can be found for:
- Geared motors without built-on accessories
  > Chapter: Geared motors/Technical data
- Gearbox options
  > Chapter: Gearboxes/Technical data and accessories
- Motor options: Spring-applied brake, feedback, 2. Shaft end, handwheel and increased centrifugal mass
  > Chapter: Motors/Accessories

Moments of inertia

The given moments of inertia of the gearbox refer to the drive shaft. The influence of the ratio (i^2) has been considered in the data.

When the total moment of inertia of the geared motor is calculated, the values of the gearbox, motor and accessories have to be added.

The respective values can be found for:
- Gearboxes
  > Chapter: Gearbox/Technical data
- Motors without built-on accessories
  > Chapter: Motors/Technical data/Rated data
- Motor options: Spring-applied brake, feedback, 2. Shaft end, handwheel and increased centrifugal mass
  > Chapter: Motors/Accessories



Selection tables, notes

Notes on the selection tables with 4-pole motors

The selection tables show the available combinations of gearbox type, number of stages, ratio and motor. They are used only to provide basic orientation.
The following legend indicates the structure of the selection tables.

Rated power Prated of the drive motor depending on the rated frequency

50 Hz: P_N = 0.06 kW
87 Hz: P_N = 0.11 kW

2-stufige Getriebe ← **Number of the gear stage of the gearbox**

Torque diagram

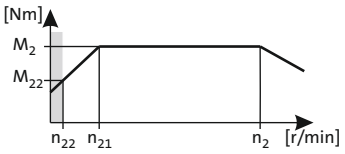

Mains operation 400 V, 50 Hz			Inverter operation 5 Hz -		- 20 Hz		- 50 Hz (1:10)			- 87 Hz (1:17.4)			i	Product		
n_2 [r/min]	M_2 [Nm]	c	n_{22} [r/min]	M_{22} [Nm]	n_{21} [r/min]	M_2 [Nm]	n_2 [r/min]	M_2 [Nm]	c	n_2 [r/min]	M_2 [Nm]	c		g500	MD□MA□□	
146	7.0	5.4	8.3	7.0	35	7.0	146	7.0	5.4	146	7.0	5.4	17.378	-B45	063-02	60
131	8.0	4.9	7.5	7.6	31	8.0	131	8.0	4.9	131	8.0	4.9	19.365	-B45	063-02	60

Product Gearbox

Product Motor

Ratio i

Page number for dimensions

Load capacity c of the gearbox
c is the ratio between the permissible rated torque of the gearbox and the rated torque of the three-phase AC motor (converted to the driven shaft).
c must be always higher than the service factor **k** determined for the application **k**.

$$c = \frac{M_{2,zul}}{M_{1,N} \cdot i \cdot \eta_{Getr}} > k$$

Mains operation
Output speed **n2**
Output torque **M2**

Inverter operation
The speed and torque data are valid for self-ventilated and forced ventilated drives. Forced ventilated drives can always output the torque **M2** in the entire setting ranges. In the case of self-ventilated drives, a reduction to **M22** is required in the lower speed range.

The following applies to self-ventilated geared motors:
n22 is the minimum speed where the torque **M22** is permissible, from **n21** to **n2**, the maximum torque is **M2**
The following applies to forced ventilated geared motors:
From the minimum speed **n22** to **n2**, the maximum torque is **M2**

Motor voltages

The power values and torques indicated in the selection tables relate to the following motor voltages:
- 50 Hz : Δ 230 V / Y 400 V
- 60 Hz : 230 V or 460 V
- 87 Hz : Δ 400 V

Operation at 87 Hz

In 87 Hz operation, the three-phase AC motor (which is designed for a voltage of Δ 230 V / Y 400 V at 50 Hz) is operated on an inverter with 400 V rated voltage in a delta connection. It is important to note here that the inverter must be configured for 87Hz output.
This offers the following advantages over 50 Hz operation:
- the setting range of the motor is increased by a factor of 1.73.
- the motor can then provide around 1.73 times greater output, which in turn allows a smaller and more affordable motor to be selected for the application.
- the efficiency of the motor is also improved.



Selection tables, notes

Notes on the selection tables with 2-pole and 6-pole motors

The selection tables show the available combinations of gearbox type, number of stages, ratio and motor. They are used only to provide basic orientation.
The following legend indicates the structure of the selection tables.

Rated power Prated of the drive motor depending on the rated frequency

50 Hz: P_N = 0.18 kW

2-stufige Getriebe ← **Number of the gear stage of the gearbox**

Mains operation 400 V, 50 Hz			i	Product		
n_2 [r/min]	M_2 [Nm]	c		g500	MD□MA□□	
239	7.0	5.7	11.449	-B110	063-11	72
216	8.0	5.3	12.698	-B110	063-11	72

Mains operation
Output speed **n_2**
Output torque **M_2**

Load capacity c of the gearbox
c is the ratio between the permissible rated torque of the gearbox and the rated torque of the three-phase AC motor (converted to the driven shaft).
c must be always higher than the service factor **k** determined for the application **k**.

$$c = \frac{M_{2,zul}}{M_{1N} \cdot i \cdot \eta_{Getr}} > k$$

Ratio i

Product Gearbox

Product Motor

Page number for dimensions

Motor voltages

The power values and torques indicated in the selection tables relate to the following motor voltages:
- 50 Hz : Δ 230 V / Y 400 V
- 60 Hz : 230 V or 460 V



Selection tables, 4-pole motors

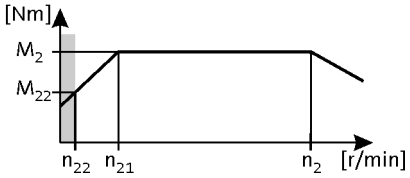

50 Hz: P_N = 0.06 kW
87 Hz: P_N = 0.11 kW

2-stage gearboxes

Mains operation 400 V, 50 Hz			Inverter operation 5 Hz -		- 20 Hz		- 50 Hz (1:10)			- 87 Hz (1:17.4)			i	Product		
n_2 [r/min]	M_2 [Nm]	c	n_{22} [r/min]	M_{22} [Nm]	n_{21} [r/min]	M_2 [Nm]	n_2 [r/min]	M_2 [Nm]	c	n_2 [r/min]	M_2 [Nm]	c		g500	MD□MA□□	
64	9.0	5.3	6.5	8.5	27	9.0	64	9.0	5.3	114	9.0	4.3	22.270	-B45	063-02	51
57	10	4.7	5.8	9.6	24	10	57	10	4.7	101	10	4.4	25.051	-B45	063-02	51
50	11	4.1	5.0	11	21	11	50	11	4.1	88	11	3.8	28.808	-B45	063-02	51
44	12	3.6	4.4	12	18	12	44	12	3.6	78	13	3.4	32.593	-B45	063-02	51
38	14	3.1	3.9	14	16	14	38	14	3.1	68	15	2.9	37.481	-B45	063-02	51
34	16	2.8	3.4	16	14	16	34	16	2.8	60	17	2.7	42.222	-B45	063-02	51
29	19	2.4	3.0	19	12	19	29	19	2.4	52	19	2.4	48.556	-B45	063-02	51
26	21	2.2	2.7	21	11	21	26	21	2.2	47	21	2.1	53.889	-B45	063-02	51
23	24	1.9	2.3	24	9.7	24	23	24	1.9	41	24	1.8	61.972	-B45	063-02	51



Selection tables, 4-pole motors

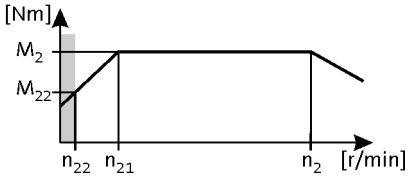

50 Hz: P_N = 0.09 kW
87 Hz: P_N = 0.16 kW

2-stage gearboxes

Mains operation 400 V, 50 Hz			Inverter operation 5 Hz -		- 20 Hz		- 50 Hz (1:10)			- 87 Hz (1:17.4)			i	Product		
n_2 [r/min]	M_2 [Nm]	c	n_{22} [r/min]	M_{22} [Nm]	n_{21} [r/min]	M_2 [Nm]	n_2 [r/min]	M_2 [Nm]	c	n_2 [r/min]	M_2 [Nm]	c		g500	MD□MA□□	
103	8.0	5.7	11	7.8	45	8.0	103	8.0	5.7	186	8.0	4.9	13.386	-B45	063-22	51
91	9.0	5.0	9.6	8.8	40	9.0	91	9.0	5.0	164	9.0	4.3	15.111	-B45	063-22	51
79	10	4.4	8.3	10	35	10	79	10	4.4	143	10	3.8	17.378	-B45	063-22	51
71	11	3.9	7.5	11	31	11	71	11	3.9	128	11	3.4	19.365	-B45	063-22	51
62	13	3.4	6.5	13	27	13	62	13	3.4	112	13	2.9	22.270	-B45	063-22	51
55	15	3.0	5.8	15	24	15	55	15	3.0	99	15	3.0	25.051	-B45	063-22	51
48	17	2.6	5.0	17	21	17	48	17	2.6	86	17	2.6	28.808	-B45	063-22	51
42	19	2.3	4.4	19	18	19	42	19	2.3	76	19	2.3	32.593	-B45	063-22	51
37	22	2.0	3.9	22	16	22	37	22	2.0	66	22	2.0	37.481	-B45	063-22	51
33	25	1.8	3.4	25	14	25	33	25	1.8	59	25	1.8	42.222	-B45	063-22	51
28	29	1.6	3.0	28	12	28	28	29	1.6	51	28	1.6	48.556	-B45	063-22	51
26	32	1.4	2.7	32	11	31	26	32	1.4	46	31	1.4	53.889	-B45	063-22	51
22	37	1.2	2.3	36	9.7	36	22	37	1.2	40	36	1.2	61.972	-B45	063-22	51



Selection tables, 4-pole motors

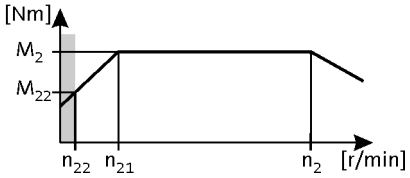

50 Hz: P_N = 0.12 kW
87 Hz: P_N = 0.21 kW

2-stage gearboxes

Mains operation 400 V, 50 Hz			Inverter operation 5 Hz -		- 20 Hz		- 50 Hz (1:10)			- 87 Hz (1:17.4)			i	Product		
n_2 [r/min]	M_2 [Nm]	c	n_{22} [r/min]	M_{22} [Nm]	n_{21} [r/min]	M_2 [Nm]	n_2 [r/min]	M_2 [Nm]	c	n_2 [r/min]	M_2 [Nm]	c		g500	MD□MA□□	
			20	4.2	84	5.0				357	5.0		7.111	-B45	063-12	51
			18	4.8	73	6.0				310	6.0		8.178	-B45	063-12	51
			16	5.4	66	7.0				279	7.0		9.101	-B45	063-12	51
136	8.0	5.6	14	6.2	57	8.0	136	8.0	5.6	242	8.0	4.8	10.466	-B45	063-12	51
122	9.0	5.1	13	6.8	52	9.0	122	9.0	5.1	218	9.0	4.3	11.640	-B45	063-12	51
			11	7.5	47	10				200	10	5.5	12.698	-B110	063-12	54
107	10	4.4	11	7.9	45	10	107	10	4.4	189	10	3.8	13.386	-B45	063-12	51
94	12	3.9	9.6	8.9	40	11	94	12	3.9	168	11	3.3	15.111	-B45	063-12	51
82	13	3.4	8.3	10	35	13	82	13	3.4	146	13	2.9	17.378	-B45	063-12	51
74	15	3.0	7.5	11	31	15	74	15	3.0	131	15	2.6	19.365	-B45	063-12	51
73	15	5.5	7.4	12	31	15	73	15	5.5	130	15	4.7	19.556	-B110	063-12	54
64	17	2.6	6.5	13	27	17	64	17	2.6	114	17	2.3	22.270	-B45	063-12	51
63	17	5.5	6.4	13	27	17	63	17	5.5	113	17	4.7	22.489	-B110	063-12	54
57	19	2.4	5.8	15	24	19	57	19	2.4	101	19	2.3	25.051	-B45	063-12	51
57	19	4.6	5.8	15	24	19	57	19	4.6	101	19	3.9	25.185	-B110	063-12	54
50	22	2.0	5.0	17	21	22	50	22	2.0	88	22	2.0	28.808	-B45	063-12	51
49	22	4.6	5.0	17	21	22	49	22	4.6	88	22	3.9	28.963	-B110	063-12	54
45	24	4.0	4.5	19	19	24	45	24	4.0	79	24	3.4	31.919	-B110	063-12	54
44	25	1.8	4.4	19	18	24	44	25	1.8	78	24	1.8	32.593	-B45	063-12	51
38	29	3.7	3.9	22	16	28	38	29	3.7	68	28	3.2	37.400	-B110	063-12	54
38	29	1.6	3.9	22	16	28	38	29	1.6	68	28	1.5	37.481	-B45	063-12	51
36	31	3.3	3.6	24	15	30	36	31	3.3	63	30	3.2	40.000	-B110	063-12	54
34	32	1.4	3.4	25	14	32	34	32	1.4	60	32	1.4	42.222	-B45	063-12	51
31	35	3.1	3.2	27	13	35	31	35	3.1	55	35	3.0	46.000	-B110	063-12	54
30	37	3.0	3.0	28	13	36	30	37	3.0	53	36	2.9	48.167	-B110	063-12	54
29	37	1.2	3.0	29	12	36	29	37	1.2	52	36	1.2	48.556	-B45	063-12	51
27	40	1.7	2.8	31	11	40	27	40	1.7	48	40	1.7	52.698	-B110	063-12	54
26	41	1.1	2.7	32	11	40	26	41	1.1	47	40	1.1	53.889	-B45	063-12	51
24	46	1.7	2.4	36	9.9	46	24	46	1.7	42	46	1.7	60.603	-B110	063-12	54
23	47	2.4	2.4	36	9.8	46	23	47	2.4	42	46	2.4	61.045	-B110	063-12	54
21	51	3.1	2.2	40	8.9	50	21	51	3.1	38	50	3.2	67.113	-B240	063-12	57
19	58	3.1	1.9	45	7.9	57	19	58	3.1	33	57	3.2	76.213	-B240	063-12	57
19	58	1.9	1.9	45	7.8	57	19	58	1.9	33	57	1.9	76.500	-B110	063-12	54
14	77	1.4	1.4	59	6.0	76	14	77	1.4	25	76	1.5	100.786	-B110	063-12	54

3-stage gearboxes

Mains operation 400 V, 50 Hz			Inverter operation 5 Hz -		- 20 Hz		- 50 Hz (1:10)			- 87 Hz (1:17.4)			i	Product		
n_2 [r/min]	M_2 [Nm]	c	n_{22} [r/min]	M_{22} [Nm]	n_{21} [r/min]	M_2 [Nm]	n_2 [r/min]	M_2 [Nm]	c	n_2 [r/min]	M_2 [Nm]	c		g500	MD□MA□□	
21	51	4.7	2.1	39	8.8	50	21	51	4.7	37	50	4.6	68.459	-B240	063-12	57



Selection tables, 4-pole motors

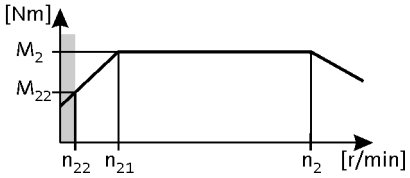

50 Hz: P_N = 0.12 kW
87 Hz: P_N = 0.21 kW

3-stage gearboxes

Mains operation 400 V, 50 Hz			Inverter operation 5 Hz -		- 20 Hz		- 50 Hz (1:10)			- 87 Hz (1:17.4)			i	Product		
n_2 [r/min]	M_2 [Nm]	c	n_{22} [r/min]	M_{22} [Nm]	n_{21} [r/min]	M_2 [Nm]	n_2 [r/min]	M_2 [Nm]	c	n_2 [r/min]	M_2 [Nm]	c		g500	MD□MA□□	
16	65	3.7	1.7	50	6.9	64	16	65	3.7	29	64	3.6	87.563	-B240	063-12	57
14	74	3.2	1.5	57	6.0	73	14	74	3.2	26	73	3.1	99.437	-B240	063-12	57
13	85	2.8	1.3	65	5.3	83	13	85	2.8	22	83	2.9	113.673	-B240	063-12	57
11	96	2.5	1.1	74	4.6	95	11	96	2.5	20	95	2.5	129.087	-B240	063-12	57
9.8	108	2.2	1.0	84	4.1	107	9.8	108	2.2	17	107	2.3	145.674	-B240	063-12	57
8.6	123	2.0	0.9	95	3.6	121	8.6	123	2.0	15	121	2.0	165.426	-B240	063-12	57
7.6	140	1.7	0.8	108	3.2	138	7.6	140	1.7	14	138	1.7	188.442	-B240	063-12	57
7.3	148	3.0	0.7	114	3.1	146	7.3	148	3.0	13	146	3.1	193.948	-B450	063-12	60
6.7	159	1.5	0.7	123	2.8	157	6.7	159	1.5	12	157	1.5	213.994	-B240	063-12	57
6.4	171	2.6	0.6	132	2.7	168	6.4	171	2.6	11	168	2.7	223.563	-B450	063-12	60
5.8	183	1.3	0.6	141	2.4	180	5.8	183	1.3	10	180	1.3	245.178	-B240	063-12	57
5.7	189	2.4	0.6	146	2.4	186	5.7	189	2.4	10	186	2.4	247.882	-B450	063-12	60
5.1	207	1.2	0.5	160	2.2	204	5.1	207	1.2	9.1	204	1.2	278.422	-B240	063-12	57
4.5	237	1.0	0.5	182	1.9	233	4.5	237	1.0	8.0	233	1.0	317.617	-B240	063-12	57



Selection tables, 4-pole motors

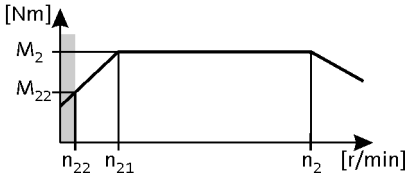

50 Hz: P_N = 0.18 kW
87 Hz: P_N = 0.33 kW

2-stage gearboxes

Mains operation 400 V, 50 Hz			Inverter operation 5 Hz -		- 20 Hz		- 50 Hz (1:10)			- 87 Hz (1:17.4)			i	Product		
n_2 [r/min]	M_2 [Nm]	c	n_{22} [r/min]	M_{22} [Nm]	n_{21} [r/min]	M_2 [Nm]	n_2 [r/min]	M_2 [Nm]	c	n_2 [r/min]	M_2 [Nm]	c		g500	MD□MA□□	
252	6.0	4.7	27	5.0	111	6.0	252	6.0	4.7	457	7.0	3.9	5.411	-B45	063-32	51
219	7.0	4.7	23	5.7	96	7.0	219	7.0	4.7	398	8.0	3.9	6.222	-B45	063-32	51
192	9.0	4.5	20	6.6	84	9.0	192	9.0	4.5	348	9.0	3.7	7.111	-B45	063-32	51
167	10	4.5	18	7.5	73	10	167	10	4.5	303	10	3.7	8.178	-B45	063-32	51
150	11	4.1	16	8.4	66	11	150	11	4.1	272	11	3.5	9.101	-B45	063-32	51
130	13	3.6	14	9.6	57	13	130	13	3.6	237	13	3.0	10.466	-B45	063-32	51
119	14	4.5	13	11	52	14	119	14	4.5	216	14	3.7	11.449	-B110	063-32	54
117	14	3.2	13	11	52	14	117	14	3.2	213	14	2.7	11.640	-B45	063-32	51
108	15	4.1	11	12	47	15	108	15	4.1	195	15	3.5	12.698	-B110	063-32	54
102	16	2.8	11	12	45	16	102	16	2.8	185	16	2.4	13.386	-B45	063-32	51
94	17	4.1	9.9	14	41	17	94	17	4.1	170	18	3.5	14.603	-B110	063-32	54
90	18	2.5	9.6	14	40	18	90	18	2.5	164	18	2.1	15.111	-B45	063-32	51
79	21	2.2	8.3	16	35	21	79	21	2.2	142	21	1.8	17.378	-B45	063-32	51
71	23	1.9	7.5	18	31	23	71	23	1.9	128	23	1.6	19.365	-B45	063-32	51
70	23	3.5	7.4	18	31	23	70	23	3.5	127	24	2.9	19.556	-B110	063-32	54
61	27	1.7	6.5	21	27	27	61	27	1.7	111	27	1.4	22.270	-B45	063-32	51
61	27	3.5	6.4	21	27	27	61	27	3.5	110	27	2.9	22.489	-B110	063-32	54
55	30	1.5	5.8	23	24	30	55	30	1.5	99	30	1.4	25.051	-B45	063-32	51
54	30	2.9	5.8	23	24	30	54	30	2.9	98	30	2.5	25.185	-B110	063-32	54
47	34	1.3	5.0	27	21	34	47	34	1.3	86	35	1.2	28.808	-B45	063-32	51
47	35	2.9	5.0	27	21	35	47	35	2.9	86	35	2.5	28.963	-B110	063-32	54
43	38	2.6	4.5	29	19	38	43	38	2.6	78	39	2.2	31.919	-B110	063-32	54
42	39	1.2	4.4	30	18	39	42	39	1.2	76	39	1.1	32.593	-B45	063-32	51
37	44	2.5	4.0	34	16	44	37	44	2.5	67	44	2.1	36.707	-B110	063-32	54
37	45	2.4	3.9	35	16	45	37	45	2.4	66	45	2.0	37.400	-B110	063-32	54
36	45	1.0	3.9	35	16	45	36	45	1.0				37.481	-B45	063-32	51
34	48	2.1	3.6	37	15	48	34	48	2.1	62	48	2.0	40.000	-B110	063-32	54
32	52	2.9	3.4	40	14	52	32	52	2.9	57	52	2.8	43.267	-B240	063-32	57
30	55	2.0	3.2	42	13	55	30	55	2.0	54	56	1.9	46.000	-B110	063-32	54
28	58	1.9	3.0	44	13	58	28	58	1.9	51	58	1.8	48.167	-B110	063-32	54
28	59	2.9	3.0	45	12	59	28	59	2.9	50	59	2.8	49.133	-B240	063-32	57
26	63	2.6	2.8	48	11	63	26	63	2.6	47	64	2.4	52.510	-B240	063-32	57
26	63	1.1	2.8	49	11	63	26	63	1.1	47	64	1.0	52.698	-B110	063-32	54
23	71	2.6	2.4	55	10	71	23	71	2.6	42	72	2.4	59.630	-B240	063-32	57
23	73	1.1	2.4	56	9.9	73	23	73	1.1	41	73	1.1	60.603	-B110	063-32	54



Selection tables, 4-pole motors

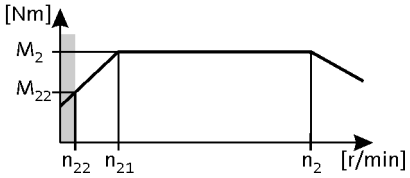

50 Hz: P_N = 0.18 kW
87 Hz: P_N = 0.33 kW

2-stage gearboxes

Mains operation 400 V, 50 Hz			Inverter operation 5 Hz -		- 20 Hz		- 50 Hz (1:10)			- 87 Hz (1:17.4)			i	Product		
n_2 [r/min]	M_2 [Nm]	c	n_{22} [r/min]	M_{22} [Nm]	n_{21} [r/min]	M_2 [Nm]	n_2 [r/min]	M_2 [Nm]	c	n_2 [r/min]	M_2 [Nm]	c		g500	MD□MA□□	
22	73	1.5	2.4	56	9.8	73	22	73	1.5	41	74	1.5	61.045	-B110	063-32	54
20	80	2.0	2.2	62	8.9	80	20	80	2.0	37	81	2.0	67.113	-B240	063-32	57
18	91	2.0	1.9	70	7.9	91	18	91	2.0	33	92	2.0	76.213	-B240	063-32	57
18	92	1.2	1.9	71	7.8	92	18	92	1.2	32	93	1.2	76.500	-B110	063-32	54

3-stage gearboxes

Mains operation 400 V, 50 Hz			Inverter operation 5 Hz -		- 20 Hz		- 50 Hz (1:10)			- 87 Hz (1:17.4)			i	Product		
n_2 [r/min]	M_2 [Nm]	c	n_{22} [r/min]	M_{22} [Nm]	n_{21} [r/min]	M_2 [Nm]	n_2 [r/min]	M_2 [Nm]	c	n_2 [r/min]	M_2 [Nm]	c		g500	MD□MA□□	
20	80	3.0	2.1	62	8.8	80	20	80	3.0	36	81	2.9	68.459	-B240	063-32	57
18	91	2.7	1.9	70	7.7	91	18	91	2.7	32	92	2.5	77.741	-B240	063-32	57
16	102	2.4	1.7	79	6.9	102	16	102	2.4	28	103	2.2	87.563	-B240	063-32	57
14	116	2.1	1.5	89	6.0	116	14	116	2.1	25	117	2.0	99.437	-B240	063-32	57
12	133	1.8	1.3	102	5.3	133	12	133	1.8	22	134	1.8	113.673	-B240	063-32	57
11	151	1.6	1.1	116	4.6	151	11	151	1.6	19	152	1.6	129.087	-B240	063-32	57
9.5	172	2.6	1.0	133	4.2	172	9.5	172	2.6	17	174	2.6	144.128	-B450	063-32	60
9.4	170	1.4	1.0	131	4.1	170	9.4	170	1.4	17	172	1.4	145.674	-B240	063-32	57
8.5	191	2.4	0.9	147	3.8	191	8.5	191	2.4	16	193	2.3	159.807	-B450	063-32	60
8.3	193	1.2	0.9	149	3.6	193	8.3	193	1.2	15	195	1.2	165.426	-B240	063-32	57
7.8	209	2.2	0.8	161	3.4	209	7.8	209	2.2	14	212	2.1	174.919	-B450	063-32	60
7.2	220	1.1	0.8	169	3.2	220	7.2	220	1.1	13	222	1.1	188.442	-B240	063-32	57
7.0	232	1.9	0.7	179	3.1	232	7.0	232	1.9	13	235	1.9	193.948	-B450	063-32	60
6.1	267	1.7	0.6	206	2.7	267	6.1	267	1.7	11	270	1.7	223.563	-B450	063-32	60
5.5	296	1.5	0.6	228	2.4	296	5.5	296	1.5	10	300	1.5	247.882	-B450	063-32	60



Selection tables, 4-pole motors

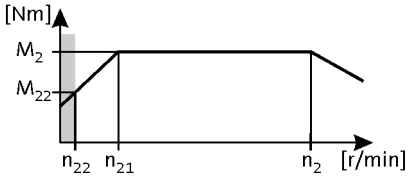

50 Hz: P_N = 0.25 kW
87 Hz: P_N = 0.45 kW

2-stage gearboxes

Mains operation 400 V, 50 Hz			Inverter operation 5 Hz -		- 20 Hz		- 50 Hz (1:10)			- 87 Hz (1:17.4)			i	Product		
n_2 [r/min]	M_2 [Nm]	c	n_{22} [r/min]	M_{22} [Nm]	n_{21} [r/min]	M_2 [Nm]	n_2 [r/min]	M_2 [Nm]	c	n_2 [r/min]	M_2 [Nm]	c		g500	MD□MA□□	
264	9.0	5.6	28	6.6	116	9.0	264	9.0	5.6	478	9.0	4.8	5.185	-B110	063-42	54
253	9.0	4.4	27	6.9	111	9.0	253	9.0	4.4	458	9.0	3.7	5.411	-B45	063-42	51
230	10	5.6	24	7.6	101	10	230	10	5.6	416	10	4.8	5.963	-B110	063-42	54
220	10	3.9	23	7.9	96	10	220	10	3.9	399	10	3.3	6.222	-B45	063-42	51
193	12	3.7	20	9.1	84	12	193	12	3.7	349	12	3.1	7.111	-B45	063-42	51
193	12	5.6	20	9.1	84	12	193	12	5.6	349	12	4.8	7.111	-B110	063-42	54
168	14	3.3	18	10	73	13	168	14	3.3	303	13	2.8	8.178	-B45	063-42	51
168	14	5.6	18	10	73	13	168	14	5.6	303	13	4.8	8.178	-B110	063-42	54
151	15	3.0	16	12	66	15	151	15	3.0	273	15	2.5	9.101	-B45	063-42	51
151	15	5.2	16	12	66	15	151	15	5.2	273	15	4.4	9.101	-B110	063-42	54
131	17	2.6	14	13	57	17	131	17	2.6	237	17	2.2	10.466	-B45	063-42	51
131	17	5.1	14	13	57	17	131	17	5.1	237	17	4.4	10.466	-B110	063-42	54
120	19	4.8	13	15	52	19	120	19	4.8	217	19	4.0	11.449	-B110	063-42	54
118	19	2.3	13	15	52	19	118	19	2.3	213	19	2.0	11.640	-B45	063-42	51
108	21	4.3	11	16	47	21	108	21	4.3	195	21	3.6	12.698	-B110	063-42	54
102	22	2.0	11	17	45	22	102	22	2.0	185	22	1.7	13.386	-B45	063-42	51
94	24	3.7	9.9	19	41	24	94	24	3.7	170	24	3.2	14.603	-B110	063-42	54
91	25	1.8	9.6	19	40	25	91	25	1.8	164	25	1.5	15.111	-B45	063-42	51
88	26	3.6	9.3	20	39	26	88	26	3.6	159	26	3.0	15.556	-B110	063-42	54
79	29	1.6	8.3	22	35	29	79	29	1.6	143	29	1.3	17.378	-B45	063-42	51
77	30	3.2	8.1	23	34	29	77	30	3.2	139	29	2.8	17.889	-B110	063-42	54
71	32	1.4	7.5	25	31	32	71	32	1.4	128	32	1.2	19.365	-B45	063-42	51
70	32	3.1	7.4	25	31	32	70	32	3.1	127	32	2.6	19.556	-B110	063-42	54
62	37	1.2	6.5	28	27	37	62	37	1.2	111	37	1.0	22.270	-B45	063-42	51
61	37	2.8	6.4	29	27	37	61	37	2.8	110	37	2.4	22.489	-B110	063-42	54
55	41	1.1	5.8	32	24	41	55	41	1.1	99	41	1.1	25.051	-B45	063-42	51
54	42	2.6	5.8	32	24	41	54	42	2.6	99	41	2.2	25.185	-B110	063-42	54
47	48	2.3	5.0	37	21	48	47	48	2.3	86	48	2.0	28.963	-B110	063-42	54
43	53	2.0	4.5	41	19	53	43	53	2.0	78	53	1.7	31.919	-B110	063-42	54
37	61	1.8	4.0	47	16	60	37	61	1.8	68	60	1.5	36.707	-B110	063-42	54
37	62	1.7	3.9	48	16	62	37	62	1.7	66	62	1.5	37.400	-B110	063-42	54
34	66	1.2	3.6	51	15	66	34	66	1.2	62	66	1.2	40.000	-B110	063-42	54
30	76	1.2	3.2	59	13	76	30	76	1.2	54	76	1.2	46.000	-B110	063-42	54
28	80	1.4	3.0	61	13	79	28	80	1.4	52	79	1.3	48.167	-B110	063-42	54
28	81	3.0	3.0	63	12	81	28	81	3.0	51	81	2.9	49.133	-B240	063-42	57



Selection tables, 4-pole motors

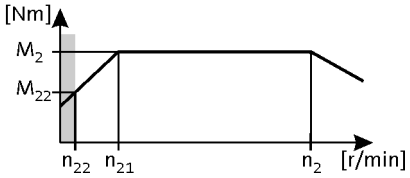

50 Hz: P_N = 0.25 kW
87 Hz: P_N = 0.45 kW

2-stage gearboxes

Mains operation 400 V, 50 Hz			Inverter operation 5 Hz -		- 20 Hz		- 50 Hz (1:10)			- 87 Hz (1:17.4)			i	Product		
n_2 [r/min]	M_2 [Nm]	c	n_{22} [r/min]	M_{22} [Nm]	n_{21} [r/min]	M_2 [Nm]	n_2 [r/min]	M_2 [Nm]	c	n_2 [r/min]	M_2 [Nm]	c		g500	MD□MA□□	
26	87	2.7	2.8	67	11	86	26	87	2.7	47	86	2.6	52.510	-B240	063-42	57
23	99	2.4	2.4	76	10	98	23	99	2.4	42	98	2.4	59.630	-B240	063-42	57
22	101	1.1	2.4	78	9.8	100	22	101	1.1	41	100	1.1	61.045	-B110	063-42	54
20	111	1.4	2.2	86	8.9	110	20	111	1.4	37	110	1.4	67.113	-B240	063-42	57
18	126	1.4	1.9	97	7.9	125	18	126	1.4	33	125	1.4	76.213	-B240	063-42	57

3-stage gearboxes

Mains operation 400 V, 50 Hz			Inverter operation 5 Hz -		- 20 Hz		- 50 Hz (1:10)			- 87 Hz (1:17.4)			i	Product		
n_2 [r/min]	M_2 [Nm]	c	n_{22} [r/min]	M_{22} [Nm]	n_{21} [r/min]	M_2 [Nm]	n_2 [r/min]	M_2 [Nm]	c	n_2 [r/min]	M_2 [Nm]	c		g500	MD□MA□□	
20	110	2.2	2.1	85	8.8	110	20	110	2.2	36	110	2.1	68.459	-B240	063-42	57
18	125	1.9	1.9	97	7.7	125	18	125	1.9	32	125	1.9	77.741	-B240	063-42	57
16	141	1.7	1.7	109	6.9	140	16	141	1.7	28	140	1.6	87.563	-B240	063-42	57
15	148	3.0	1.6	114	6.7	147	15	148	3.0	28	147	2.9	89.534	-B450	063-42	60
14	164	2.7	1.5	127	6.0	163	14	164	2.7	25	163	2.7	99.274	-B450	063-42	60
14	160	1.5	1.5	124	6.0	160	14	160	1.5	25	160	1.5	99.437	-B240	063-42	57
12	184	2.4	1.3	142	5.4	183	12	184	2.4	22	183	2.5	111.372	-B450	063-42	60
12	183	1.3	1.3	141	5.3	182	12	183	1.3	22	182	1.3	113.673	-B240	063-42	57
11	204	2.2	1.2	157	4.9	203	11	204	2.2	20	203	2.2	123.487	-B450	063-42	60
11	208	1.2	1.1	160	4.6	207	11	208	1.2	19	207	1.2	129.087	-B240	063-42	57
9.5	239	1.9	1.0	184	4.2	237	9.5	239	1.9	17	237	1.9	144.128	-B450	063-42	60
9.4	235	1.0	1.0	181	4.1	234	9.4	235	1.0	17	234	1.0	145.674	-B240	063-42	57
8.6	265	1.7	0.9	204	3.8	263	8.6	265	1.7	16	263	1.7	159.807	-B450	063-42	60
7.8	290	1.6	0.8	223	3.4	288	7.8	290	1.6	14	288	1.6	174.919	-B450	063-42	60
7.1	321	1.4	0.7	247	3.1	319	7.1	321	1.4	13	319	1.4	193.948	-B450	063-42	60
6.1	370	1.2	0.6	285	2.7	368	6.1	370	1.2	11	368	1.2	223.563	-B450	063-42	60
5.5	410	1.1	0.6	316	2.4	408	5.5	410	1.1	10	408	1.1	247.882	-B450	063-42	60



Selection tables, 4-pole motors

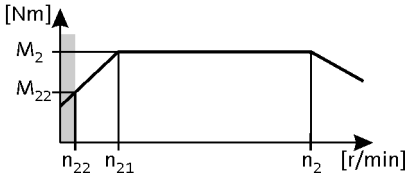

50 Hz: P_N = 0.37 kW
87 Hz: P_N = 0.66 kW

2-stage gearboxes

Mains operation 400 V, 50 Hz			Inverter operation 5 Hz -		- 20 Hz		- 50 Hz (1:10)			- 87 Hz (1:17.4)			i	Product		
n_2 [r/min]	M_2 [Nm]	c	n_{22} [r/min]	M_{22} [Nm]	n_{21} [r/min]	M_2 [Nm]	n_2 [r/min]	M_2 [Nm]	c	n_2 [r/min]	M_2 [Nm]	c		g500	MD□MA□□	
272	12	4.9	28	9.5	116	12	272	12	4.9				5.185	-B110	071-32	54
261	13	3.0	27	9.9	111	13	261	13	3.0	466	13	2.6	5.411	-B45	071-32	51
237	14	4.9	24	11	101	14	237	14	4.9				5.963	-B110	071-32	54
227	15	2.7	23	11	96	15	227	15	2.7	405	15	2.3	6.222	-B45	071-32	51
198	17	2.5	20	13	84	17	198	17	2.5	354	17	2.1	7.111	-B45	071-32	51
198	17	4.6	20	13	84	17	198	17	4.6				7.111	-B110	071-32	54
172	19	2.3	18	15	73	19	172	19	2.3	308	19	1.9	8.178	-B45	071-32	51
172	19	4.2	18	15	73	19	172	19	4.2				8.178	-B110	071-32	54
155	22	2.1	16	17	66	22	155	22	2.1	277	22	1.8	9.101	-B45	071-32	51
155	22	3.9	16	17	66	22	155	22	3.9				9.101	-B110	071-32	54
135	25	1.8	14	19	57	25	135	25	1.8	241	25	1.5	10.466	-B45	071-32	51
135	25	3.6	14	19	57	25	135	25	3.6				10.466	-B110	071-32	54
123	27	3.3	13	21	52	27	123	27	3.3				11.449	-B110	071-32	54
121	28	1.6	13	21	52	28	121	28	1.6	217	28	1.4	11.640	-B45	071-32	51
111	30	3.0	11	23	47	30	111	30	3.0	198	30	2.5	12.698	-B110	071-32	54
105	32	1.4	11	25	45	32	105	32	1.4	188	32	1.2	13.386	-B45	071-32	51
97	35	2.6	9.9	27	41	35	97	35	2.6	173	35	2.2	14.603	-B110	071-32	54
93	36	1.3	9.6	28	40	36	93	36	1.3	167	36	1.1	15.111	-B45	071-32	51
91	37	2.5	9.3	29	39	37	91	37	2.5	162	37	2.1	15.556	-B110	071-32	54
81	41	1.1	8.3	32	35	41	81	41	1.1				17.378	-B45	071-32	51
79	43	2.3	8.1	33	34	43	79	43	2.3	141	43	1.9	17.889	-B110	071-32	54
72	47	2.2	7.4	36	31	46	72	47	2.2	129	46	1.8	19.556	-B110	071-32	54
63	54	1.9	6.4	41	27	53	63	54	1.9	112	53	1.6	22.489	-B110	071-32	54
56	60	1.8	5.8	46	24	60	56	60	1.8	100	60	1.5	25.185	-B110	071-32	54
49	69	1.6	5.0	53	21	69	49	69	1.6	87	69	1.3	28.963	-B110	071-32	54
44	76	1.4	4.5	59	19	76	44	76	1.4	79	76	1.2	31.919	-B110	071-32	54
42	80	3.0	4.3	61	18	79	42	80	3.0	75	79	2.5	33.433	-B240	071-32	57
38	87	1.3	4.0	67	16	87	38	87	1.3	69	87	1.1	36.707	-B110	071-32	54
38	89	1.2	3.9	69	16	89	38	89	1.2	67	89	1.0	37.400	-B110	071-32	54
37	90	2.7	3.8	70	16	90	37	90	2.7	66	90	2.2	37.967	-B240	071-32	57
35	95	1.1	3.6	73	15	95	35	95	1.1	63	95	1.0	40.000	-B110	071-32	54
33	103	2.3	3.4	79	14	103	33	103	2.3	58	103	2.2	43.267	-B240	071-32	57
31	110	1.0	3.2	84	13	110	31	110	1.0				46.000	-B110	071-32	54
29	117	2.1	3.0	90	12	117	29	117	2.1	51	117	2.0	49.133	-B240	071-32	57
27	125	1.9	2.8	96	11	125	27	125	1.9	48	125	1.8	52.510	-B240	071-32	57



Selection tables, 4-pole motors

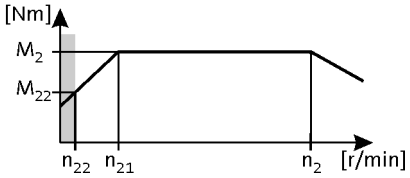

50 Hz: P_N = 0.37 kW
87 Hz: P_N = 0.66 kW

2-stage gearboxes

Mains operation 400 V, 50 Hz			Inverter operation 5 Hz -		- 20 Hz		- 50 Hz (1:10)			- 87 Hz (1:17.4)			i	Product		
n_2 [r/min]	M_2 [Nm]	c	n_{22} [r/min]	M_{22} [Nm]	n_{21} [r/min]	M_2 [Nm]	n_2 [r/min]	M_2 [Nm]	c	n_2 [r/min]	M_2 [Nm]	c		g500	MD□MA□□	
24	142	1.7	2.4	109	10	142	24	142	1.7	42	142	1.6	59.630	-B240	071-32	57
21	160	1.1	2.2	123	8.9	159	21	160	1.1	38	159	1.1	67.113	-B240	071-32	57
19	181	1.1	1.9	140	7.9	181	19	181	1.1	33	181	1.1	76.213	-B240	071-32	57

3-stage gearboxes

Mains operation 400 V, 50 Hz			Inverter operation 5 Hz -		- 20 Hz		- 50 Hz (1:10)			- 87 Hz (1:17.4)			i	Product		
n_2 [r/min]	M_2 [Nm]	c	n_{22} [r/min]	M_{22} [Nm]	n_{21} [r/min]	M_2 [Nm]	n_2 [r/min]	M_2 [Nm]	c	n_2 [r/min]	M_2 [Nm]	c		g500	MD□MA□□	
31	108	3.2	3.2	83	13	108	31	108	3.2				45.245	-B450	071-32	60
28	119	3.2	2.9	92	12	119	28	119	3.2				50.167	-B450	071-32	60
23	148	3.0	2.3	114	9.6	148	23	148	3.0	41	148	2.9	62.262	-B450	071-32	60
21	159	1.5	2.1	122	8.8	159	21	159	1.5	37	159	1.5	68.459	-B240	071-32	57
18	180	1.3	1.9	139	7.7	180	18	180	1.3	32	180	1.3	77.741	-B240	071-32	57
16	203	1.2	1.7	157	6.9	203	16	203	1.2	29	203	1.1	87.563	-B240	071-32	57
16	213	2.1	1.6	164	6.7	213	16	213	2.1	28	213	2.0	89.534	-B450	071-32	60
14	236	1.9	1.5	182	6.0	236	14	236	1.9	25	236	1.8	99.274	-B450	071-32	60
14	231	1.0	1.5	178	6.0	230	14	231	1.0	25	230	1.0	99.437	-B240	071-32	57
13	265	1.7	1.3	204	5.4	265	13	265	1.7	23	265	1.7	111.372	-B450	071-32	60
11	294	1.5	1.2	226	4.9	293	11	294	1.5	20	293	1.5	123.487	-B450	071-32	60
9.8	343	1.3	1.0	264	4.2	342	9.8	343	1.3	18	342	1.3	144.128	-B450	071-32	60
8.8	380	1.2	0.9	293	3.8	380	8.8	380	1.2	16	380	1.2	159.807	-B450	071-32	60
8.1	416	1.1	0.8	321	3.4	416	8.1	416	1.1	14	416	1.1	174.919	-B450	071-32	60



Selection tables, 4-pole motors

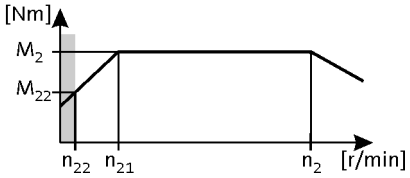

50 Hz: P_N = 0.55 kW
87 Hz: P_N = 1.0 kW

2-stage gearboxes

Mains operation 400 V, 50 Hz			Inverter operation 5 Hz -		- 20 Hz		- 50 Hz (1:10)			- 87 Hz (1:17.4)			i	Product		
n_2 [r/min]	M_2 [Nm]	c	n_{22} [r/min]	M_{22} [Nm]	n_{21} [r/min]	M_2 [Nm]	n_2 [r/min]	M_2 [Nm]	c	n_2 [r/min]	M_2 [Nm]	c		g500	MD□MA□□	
394	13	5.1	41	9.7	168	13	394	13	5.1				3.565	-B240	071-42	57
271	18	3.8	28	14	116	18	271	18	3.8				5.185	-B110	071-42	54
260	19	2.0	27	15	111	19	260	19	2.0	465	20	1.7	5.411	-B45	071-42	51
236	21	3.4	24	16	101	21	236	21	3.4				5.963	-B110	071-42	54
226	22	1.8	23	17	96	22	226	22	1.8	404	22	1.5	6.222	-B45	071-42	51
225	22	4.5	23	17	96	22	225	22	4.5				6.257	-B240	071-42	57
198	25	1.7	20	19	84	25	198	25	1.7	354	26	1.4	7.111	-B45	071-42	51
198	25	3.1	20	19	84	25	198	25	3.1	354	26	2.5	7.111	-B110	071-42	54
172	29	1.5	18	22	73	29	172	29	1.5	308	29	1.3	8.178	-B45	071-42	51
172	29	2.8	18	22	73	29	172	29	2.8	308	29	2.3	8.178	-B110	071-42	54
154	32	1.4	16	25	66	32	154	32	1.4	276	33	1.2	9.101	-B45	071-42	51
154	32	2.6	16	25	66	32	154	32	2.6	276	33	2.2	9.101	-B110	071-42	54
134	37	1.2	14	29	57	37	134	37	1.2	240	38	1.0	10.466	-B45	071-42	51
134	37	2.4	14	29	57	37	134	37	2.4	240	38	2.0	10.466	-B110	071-42	54
123	41	2.2	13	31	52	41	123	41	2.2	220	41	1.8	11.449	-B110	071-42	54
121	41	1.1	13	32	52	41	121	41	1.1				11.640	-B45	071-42	51
111	45	2.0	11	35	47	45	111	45	2.0	198	46	1.7	12.698	-B110	071-42	54
96	52	1.7	9.9	40	41	52	96	52	1.7	172	53	1.4	14.603	-B110	071-42	54
90	55	1.7	9.3	43	39	55	90	55	1.7	162	56	1.4	15.556	-B110	071-42	54
79	64	1.5	8.1	49	34	64	79	64	1.5	141	65	1.3	17.889	-B110	071-42	54
72	69	1.4	7.4	54	31	69	72	69	1.4	129	71	1.2	19.556	-B110	071-42	54
63	80	1.3	6.4	62	27	80	63	80	1.3	112	81	1.1	22.489	-B110	071-42	54
60	83	2.9	6.2	64	26	83	60	83	2.9	107	85	2.4	23.450	-B240	071-42	57
56	89	1.2	5.8	69	24	89	56	89	1.2	100	91	1.0	25.185	-B110	071-42	54
52	95	2.5	5.4	74	22	95	52	95	2.5	94	97	2.1	26.878	-B240	071-42	57
49	103	1.1	5.0	79	21	103	49	103	1.1				28.963	-B110	071-42	54
46	108	2.2	4.8	84	20	108	46	108	2.2	82	110	1.8	30.522	-B240	071-42	57
42	119	2.0	4.3	91	18	119	42	119	2.0	75	121	1.7	33.433	-B240	071-42	57
37	135	1.8	3.8	104	16	135	37	135	1.8	66	137	1.5	37.967	-B240	071-42	57
33	154	1.6	3.4	118	14	154	33	154	1.6	58	156	1.5	43.267	-B240	071-42	57
29	174	1.4	3.0	134	12	174	29	174	1.4	51	177	1.3	49.133	-B240	071-42	57
27	186	1.3	2.8	144	11	186	27	186	1.3	48	189	1.2	52.510	-B240	071-42	57
24	212	1.1	2.4	163	10	212	24	212	1.1	42	215	1.1	59.630	-B240	071-42	57

3-stage gearboxes

Mains operation 400 V, 50 Hz			Inverter operation 5 Hz -		- 20 Hz		- 50 Hz (1:10)			- 87 Hz (1:17.4)			i	Product		
n_2 [r/min]	M_2 [Nm]	c	n_{22} [r/min]	M_{22} [Nm]	n_{21} [r/min]	M_2 [Nm]	n_2 [r/min]	M_2 [Nm]	c	n_2 [r/min]	M_2 [Nm]	c		g500	MD□MA□□	
35	143	3.1	3.6	110	15	143	35	143	3.1	62	145	3.0	40.330	-B450	071-42	60
31	161	2.8	3.2	124	13	161	31	161	2.8	56	163	2.6	45.245	-B450	071-42	60



Selection tables, 4-pole motors

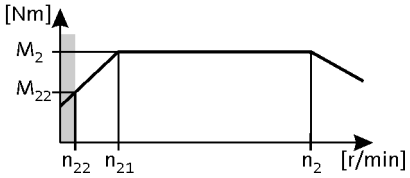

50 Hz: P_N = 0.55 kW
87 Hz: P_N = 1.0 kW

3-stage gearboxes

Mains operation 400 V, 50 Hz			Inverter operation 5 Hz -		- 20 Hz		- 50 Hz (1:10)			- 87 Hz (1:17.4)			i	Product		
n_2 [r/min]	M_2 [Nm]	c	n_{22} [r/min]	M_{22} [Nm]	n_{21} [r/min]	M_2 [Nm]	n_2 [r/min]	M_2 [Nm]	c	n_2 [r/min]	M_2 [Nm]	c		g500	MD□MA□□	
28	178	2.5	2.9	137	12	178	28	178	2.5	50	181	2.4	50.167	-B450	071-42	60
25	199	2.3	2.6	154	11	199	25	199	2.3	45	203	2.1	56.154	-B450	071-42	60
23	221	2.0	2.3	170	9.6	221	23	221	2.0	40	225	1.9	62.262	-B450	071-42	60
21	237	1.0	2.1	183	8.8	237	21	237	1.0				68.459	-B240	071-42	57
20	244	1.8	2.1	188	8.7	244	20	244	1.8	37	248	1.7	68.788	-B450	071-42	60
18	271	1.7	1.9	209	7.9	271	18	271	1.7	33	275	1.6	76.271	-B450	071-42	60
16	318	1.4	1.6	245	6.7	318	16	318	1.4	28	323	1.3	89.534	-B450	071-42	60
14	352	1.3	1.5	271	6.0	352	14	352	1.3	25	358	1.2	99.274	-B450	071-42	60
13	395	1.1	1.3	305	5.4	395	13	395	1.1	23	402	1.1	111.372	-B450	071-42	60
11	438	1.0	1.2	338	4.9	438	11	438	1.0	20	445	1.0	123.487	-B450	071-42	60



Selection tables, 4-pole motors

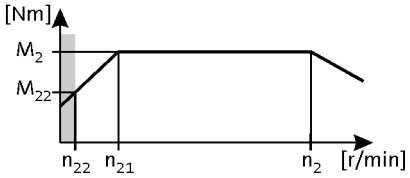

50 Hz: P_N = 0.75 kW
87 Hz: P_N = 1.35 kW

2-stage gearboxes

Mains operation 400 V, 50 Hz			Inverter operation 5 Hz -		- 20 Hz		- 50 Hz (1:10)			- 87 Hz (1:17.4)			i	Product		
n_2 [r/min]	M_2 [Nm]	c	n_{22} [r/min]	M_{22} [Nm]	n_{21} [r/min]	M_2 [Nm]	n_2 [r/min]	M_2 [Nm]	c	n_2 [r/min]	M_2 [Nm]	c		g500	MH□MA□□	
396	17	4.7	41	13	168	17	396	17	4.7	707	17	3.9	3.565	-B240	080-32	57
272	25	2.8	28	19	116	25	272	25	2.8	486	25	2.3	5.185	-B110	080-32	54
237	29	2.5	24	22	101	29	237	29	2.5	423	29	2.1	5.963	-B110	080-32	54
225	30	4.1	23	23	96	30	225	30	4.1				6.257	-B240	080-32	57
198	34	2.2	20	26	84	34	198	34	2.2	354	35	1.9	7.111	-B110	080-32	54
172	39	2.1	18	30	73	39	172	39	2.1	308	40	1.7	8.178	-B110	080-32	54
155	44	1.9	16	34	66	44	155	44	1.9	277	44	1.6	9.101	-B110	080-32	54
135	51	1.8	14	39	57	51	135	51	1.8	241	51	1.5	10.466	-B110	080-32	54
123	55	1.6	13	43	52	55	123	55	1.6	220	56	1.4	11.449	-B110	080-32	54
111	61	1.5	11	47	47	61	111	61	1.5	198	62	1.2	12.698	-B110	080-32	54
97	70	1.3	9.9	54	41	70	97	70	1.3	173	71	1.1	14.603	-B110	080-32	54
94	72	3.1	9.7	56	40	72	94	72	3.1	168	73	2.6	15.008	-B240	080-32	57
91	75	1.2	9.3	58	39	75	91	75	1.2	162	76	1.0	15.556	-B110	080-32	54
84	81	3.0	8.6	63	36	81	84	81	3.0	150	82	2.5	16.857	-B240	080-32	57
79	86	1.1	8.1	67	34	86	79	86	1.1				17.889	-B110	080-32	54
74	92	2.6	7.6	71	31	92	74	92	2.6	132	93	2.2	19.143	-B240	080-32	57
72	94	1.1	7.4	73	31	94	72	94	1.1				19.556	-B110	080-32	54
68	100	2.4	7.0	77	29	100	68	100	2.4	122	100	2.0	20.650	-B240	080-32	57
60	113	2.1	6.2	87	26	113	60	113	2.1	108	114	1.8	23.450	-B240	080-32	57
53	130	1.9	5.4	100	22	130	53	130	1.9	94	131	1.6	26.878	-B240	080-32	57
46	147	1.6	4.8	113	20	147	46	147	1.6	83	148	1.4	30.522	-B240	080-32	57
42	161	1.5	4.3	124	18	161	42	161	1.5	75	162	1.2	33.433	-B240	080-32	57
37	183	1.3	3.8	141	16	183	37	183	1.3	66	185	1.1	37.967	-B240	080-32	57
33	209	1.2	3.4	161	14	209	33	209	1.2	58	210	1.1	43.267	-B240	080-32	57
29	237	1.0	3.0	183	12	237	29	237	1.0				49.133	-B240	080-32	57

3-stage gearboxes

Mains operation 400 V, 50 Hz			Inverter operation 5 Hz -		- 20 Hz		- 50 Hz (1:10)			- 87 Hz (1:17.4)			i	Product		
n_2 [r/min]	M_2 [Nm]	c	n_{22} [r/min]	M_{22} [Nm]	n_{21} [r/min]	M_2 [Nm]	n_2 [r/min]	M_2 [Nm]	c	n_2 [r/min]	M_2 [Nm]	c		g500	MH□MA□□	
46	149	3.0	4.7	115	19	149	46	149	3.0	81	151	2.5	30.985	-B450	080-32	60
39	175	2.6	4.0	135	17	175	39	175	2.6	69	177	2.1	36.373	-B450	080-32	60
35	195	2.3	3.6	150	15	195	35	195	2.3	63	196	2.2	40.330	-B450	080-32	60
31	218	2.1	3.2	168	13	218	31	218	2.1	56	220	2.0	45.245	-B450	080-32	60
28	242	1.9	2.9	186	12	242	28	242	1.9	50	244	1.8	50.167	-B450	080-32	60
25	271	1.7	2.6	209	11	271	25	271	1.7	45	273	1.6	56.154	-B450	080-32	60
23	300	1.5	2.3	231	9.6	300	23	300	1.5	41	303	1.4	62.262	-B450	080-32	60
21	332	1.4	2.1	256	8.7	332	21	332	1.4	37	334	1.3	68.788	-B450	080-32	60
19	368	1.2	1.9	283	7.9	368	19	368	1.2	33	371	1.2	76.271	-B450	080-32	60
16	432	1.0	1.6	333	6.7	432	16	432	1.0				89.534	-B450	080-32	60



Selection tables, 4-pole motors

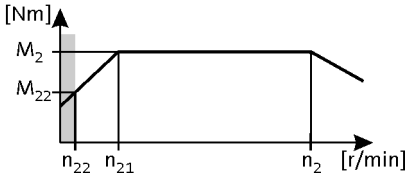

50 Hz: P_N = 1.1 kW
87 Hz: P_N = 2.0 kW

2-stage gearboxes

Mains operation 400 V, 50 Hz			Inverter operation 5 Hz -		- 20 Hz		- 50 Hz (1:10)			- 87 Hz (1:17.4)			i	Product		
n_2 [r/min]	M_2 [Nm]	c	n_{22} [r/min]	M_{22} [Nm]	n_{21} [r/min]	M_2 [Nm]	n_2 [r/min]	M_2 [Nm]	c	n_2 [r/min]	M_2 [Nm]	c		g500	MH□MA□□	
401	25	5.6	41	17	168	25	401	25	5.6				3.565	-B240	090-12	57
276	36	1.9	28	25	116	36	276	36	1.9	490	37	1.6	5.185	-B110	090-12	54
240	42	1.7	24	29	101	42	240	42	1.7				5.963	-B110	090-12	54
229	44	3.6	23	31	96	44	229	44	3.6				6.257	-B240	090-12	57
201	50	1.6	20	35	84	50	201	50	1.6	357	51	1.3	7.111	-B110	090-12	54
175	57	1.4	18	40	73	57	175	57	1.4	311	58	1.2	8.178	-B110	090-12	54
157	64	1.3	16	45	66	64	157	64	1.3	279	65	1.1	9.101	-B110	090-12	54
152	66	2.9	15	46	64	66	152	66	2.9	269	67	2.4	9.440	-B240	090-12	57
137	73	1.2	14	51	57	73	137	73	1.2	243	75	1.0	10.466	-B110	090-12	54
133	75	2.7	14	52	56	75	133	75	2.7	237	77	2.2	10.720	-B240	090-12	57
125	80	1.1	13	56	52	80	125	80	1.1				11.449	-B110	090-12	54
118	84	2.5	12	59	50	84	118	84	2.5	210	86	2.0	12.081	-B240	090-12	57
113	89	1.0	11	62	47	89	113	89	1.0				12.698	-B110	090-12	54
104	96	2.3	11	67	44	96	104	96	2.3	185	98	1.9	13.719	-B240	090-12	57
95	105	2.1	9.7	73	40	105	95	105	2.1	169	107	1.8	15.008	-B240	090-12	57
85	118	2.0	8.6	82	36	118	85	118	2.0	151	120	1.7	16.857	-B240	090-12	57
75	134	1.8	7.6	94	31	134	75	134	1.8	133	137	1.5	19.143	-B240	090-12	57
69	144	1.7	7.0	101	29	144	69	144	1.7	123	148	1.4	20.650	-B240	090-12	57
61	164	1.5	6.2	115	26	164	61	164	1.5	108	168	1.2	23.450	-B240	090-12	57
53	188	1.3	5.4	131	22	188	53	188	1.3	95	192	1.1	26.878	-B240	090-12	57
47	213	1.1	4.8	149	20	213	47	213	1.1				30.522	-B240	090-12	57
43	233	1.0	4.3	163	18	233	43	233	1.0				33.433	-B240	090-12	57

3-stage gearboxes

Mains operation 400 V, 50 Hz			Inverter operation 5 Hz -		- 20 Hz		- 50 Hz (1:10)			- 87 Hz (1:17.4)			i	Product		
n_2 [r/min]	M_2 [Nm]	c	n_{22} [r/min]	M_{22} [Nm]	n_{21} [r/min]	M_2 [Nm]	n_2 [r/min]	M_2 [Nm]	c	n_2 [r/min]	M_2 [Nm]	c		g500	MH□MA□□	
72	138	3.3	7.3	97	30	138	72	138	3.3	128	142	2.7	19.831	-B450	090-12	60
63	159	2.8	6.4	111	26	159	63	159	2.8	111	163	2.3	22.813	-B450	090-12	60
57	176	2.6	5.7	124	24	176	57	176	2.6	100	181	2.1	25.294	-B450	090-12	60
51	195	2.3	5.2	137	22	195	51	195	2.3	91	200	1.9	27.945	-B450	090-12	60
46	216	2.1	4.7	151	19	216	46	216	2.1	82	221	1.7	30.985	-B450	090-12	60
39	254	1.8	4.0	178	17	254	39	254	1.8	70	260	1.5	36.373	-B450	090-12	60
36	281	1.6	3.6	197	15	281	36	281	1.6	63	288	1.5	40.330	-B450	090-12	60
32	316	1.4	3.2	221	13	316	32	316	1.4	56	323	1.3	45.245	-B450	090-12	60
29	350	1.3	2.9	245	12	350	29	350	1.3	51	358	1.2	50.167	-B450	090-12	60
26	392	1.2	2.6	274	11	392	26	392	1.2	45	401	1.1	56.154	-B450	090-12	60
23	434	1.0	2.3	304	9.6	434	23	434	1.0				62.262	-B450	090-12	60



Selection tables, 4-pole motors

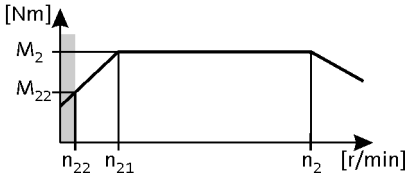

50 Hz: P_N = 1.5 kW
87 Hz: P_N = 2.7 kW

2-stage gearboxes

Mains operation 400 V, 50 Hz			Inverter operation 5 Hz -		- 20 Hz		- 50 Hz (1:10)			- 87 Hz (1:17.4)			i	Product		
n_2 [r/min]	M_2 [Nm]	c	n_{22} [r/min]	M_{22} [Nm]	n_{21} [r/min]	M_2 [Nm]	n_2 [r/min]	M_2 [Nm]	c	n_2 [r/min]	M_2 [Nm]	c		g500	MH□MA□□	
403	34	4.1	41	24	168	34	403	34	4.1				3.565	-B240	090-32	57
294	46	3.2	30	33	123	46	294	46	3.2	521	47	2.6	4.889	-B240	090-32	57
277	49	1.4	28	34	116	49	277	49	1.4				5.185	-B110	090-32	54
241	57	1.3	24	40	101	57	241	57	1.3				5.963	-B110	090-32	54
229	59	2.6	23	42	96	59	229	59	2.6	407	60	2.2	6.257	-B240	090-32	57
209	65	2.7	21	46	87	65	209	65	2.7	370	66	2.3	6.883	-B240	090-32	57
202	67	1.1	20	47	84	67	202	67	1.1				7.111	-B110	090-32	54
184	74	2.5	19	52	77	74	184	74	2.5				7.817	-B240	090-32	57
176	78	1.0	18	54	73	78	176	78	1.0				8.178	-B110	090-32	54
152	90	2.1	15	63	64	90	152	90	2.1	270	91	1.8	9.440	-B240	090-32	57
134	102	2.0	14	71	56	102	134	102	2.0	237	103	1.7	10.720	-B240	090-32	57
119	115	1.8	12	80	50	115	119	115	1.8	211	116	1.5	12.081	-B240	090-32	57
105	130	1.7	11	91	44	130	105	130	1.7	186	132	1.4	13.719	-B240	090-32	57
96	142	1.6	9.7	100	40	142	96	142	1.6	170	144	1.3	15.008	-B240	090-32	57
85	160	1.5	8.6	112	36	160	85	160	1.5	151	162	1.2	16.857	-B240	090-32	57
75	182	1.3	7.6	127	31	182	75	182	1.3	133	184	1.1	19.143	-B240	090-32	57
70	196	1.2	7.0	137	29	196	70	196	1.2	123	199	1.0	20.650	-B240	090-32	57
61	222	1.1	6.2	156	26	222	61	222	1.1				23.450	-B240	090-32	57

3-stage gearboxes

Mains operation 400 V, 50 Hz			Inverter operation 5 Hz -		- 20 Hz		- 50 Hz (1:10)			- 87 Hz (1:17.4)			i	Product		
n_2 [r/min]	M_2 [Nm]	c	n_{22} [r/min]	M_{22} [Nm]	n_{21} [r/min]	M_2 [Nm]	n_2 [r/min]	M_2 [Nm]	c	n_2 [r/min]	M_2 [Nm]	c		g500	MH□MA□□	
101	134	3.1	10	94	42	134	101	134	3.1	180	136	2.6	14.165	-B450	090-32	60
88	155	2.8	8.9	109	37	155	88	155	2.8	156	157	2.3	16.349	-B450	090-32	60
80	170	2.6	8.1	119	34	170	80	170	2.6	142	172	2.2	17.885	-B450	090-32	60
72	188	2.4	7.3	132	30	188	72	188	2.4	128	191	2.0	19.831	-B450	090-32	60
63	216	2.1	6.4	151	26	216	63	216	2.1	112	220	1.7	22.813	-B450	090-32	60
57	240	1.9	5.7	168	24	240	57	240	1.9	101	243	1.6	25.294	-B450	090-32	60
51	265	1.7	5.2	186	22	265	51	265	1.7	91	269	1.4	27.945	-B450	090-32	60
46	294	1.5	4.7	206	19	294	46	294	1.5	82	298	1.3	30.985	-B450	090-32	60
40	345	1.3	4.0	241	17	345	40	345	1.3	70	350	1.1	36.373	-B450	090-32	60
36	382	1.2	3.6	268	15	382	36	382	1.2	63	388	1.1	40.330	-B450	090-32	60
32	429	1.1	3.2	300	13	429	32	429	1.1				45.245	-B450	090-32	60



Selection tables, 4-pole motors

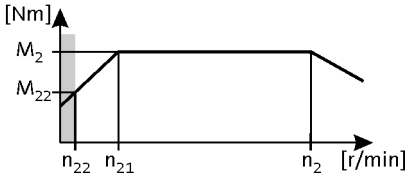

50 Hz: P_N = 2.2 kW
87 Hz: P_N = 3.9 kW

2-stage gearboxes

Mains operation 400 V, 50 Hz			Inverter operation 5 Hz -		- 20 Hz		- 50 Hz (1:10)			- 87 Hz (1:17.4)			i	Product		
n_2 [r/min]	M_2 [Nm]	c	n_{22} [r/min]	M_{22} [Nm]	n_{21} [r/min]	M_2 [Nm]	n_2 [r/min]	M_2 [Nm]	c	n_2 [r/min]	M_2 [Nm]	c		g500	MH□MA□□	
405	49	2.8	41	34	168	49	405	49	2.8	717	49	2.3	3.565	-B240	100-12	57
296	68	2.2	30	47	123	68	296	68	2.2	523	68	1.8	4.889	-B240	100-12	57
231	86	1.8	23	60	96	86	231	86	1.8	408	87	1.5	6.257	-B240	100-12	57
210	95	1.9	21	66	87	95	210	95	1.9				6.883	-B240	100-12	57
185	108	1.7	19	75	77	108	185	108	1.7				7.817	-B240	100-12	57
153	130	1.5	15	91	64	130	153	130	1.5				9.440	-B240	100-12	57
135	148	1.4	14	103	56	148	135	148	1.4				10.720	-B240	100-12	57
120	167	1.3	12	117	50	167	120	167	1.3				12.081	-B240	100-12	57
105	189	1.2	11	132	44	189	105	189	1.2				13.719	-B240	100-12	57
96	207	1.1	9.7	145	40	207	96	207	1.1				15.008	-B240	100-12	57
86	233	1.0	8.6	163	36	233	86	233	1.0				16.857	-B240	100-12	57

3-stage gearboxes

Mains operation 400 V, 50 Hz			Inverter operation 5 Hz -		- 20 Hz		- 50 Hz (1:10)			- 87 Hz (1:17.4)			i	Product		
n_2 [r/min]	M_2 [Nm]	c	n_{22} [r/min]	M_{22} [Nm]	n_{21} [r/min]	M_2 [Nm]	n_2 [r/min]	M_2 [Nm]	c	n_2 [r/min]	M_2 [Nm]	c		g500	MH□MA□□	
211	95	3.3	21	66	88	95	211	95	3.3	372	95	2.7	6.860	-B450	100-12	60
155	129	2.9	16	90	64	129	155	129	2.9	274	129	2.4	9.315	-B450	100-12	60
140	143	2.7	14	100	58	143	140	143	2.7	247	143	2.3	10.328	-B450	100-12	60
113	176	2.3	11	123	47	176	113	176	2.3	200	177	1.9	12.775	-B450	100-12	60
102	196	2.2	10	137	42	196	102	196	2.2	180	196	1.8	14.165	-B450	100-12	60
88	226	1.9	8.9	158	37	226	88	226	1.9	156	226	1.6	16.349	-B450	100-12	60
81	247	1.8	8.1	172	34	247	81	247	1.8	143	248	1.5	17.885	-B450	100-12	60
73	274	1.6	7.3	191	30	274	73	274	1.6	129	275	1.4	19.831	-B450	100-12	60
63	315	1.4	6.4	220	26	315	63	315	1.4	112	316	1.2	22.813	-B450	100-12	60
57	349	1.3	5.7	244	24	349	57	349	1.3	101	350	1.1	25.294	-B450	100-12	60
52	386	1.2	5.2	269	22	386	52	386	1.2				27.945	-B450	100-12	60
47	428	1.1	4.7	299	19	428	47	428	1.1				30.985	-B450	100-12	60



Selection tables, 4-pole motors

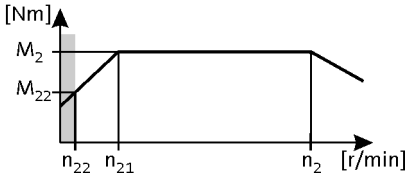

50 Hz: P_N = 3.0 kW
87 Hz: P_N = 5.4 kW

2-stage gearboxes

Mains operation 400 V, 50 Hz			Inverter operation 5 Hz -		- 20 Hz		- 50 Hz (1:10)			- 87 Hz (1:17.4)			i	Product		
n_2 [r/min]	M_2 [Nm]	c	n_{22} [r/min]	M_{22} [Nm]	n_{21} [r/min]	M_2 [Nm]	n_2 [r/min]	M_2 [Nm]	c	n_2 [r/min]	M_2 [Nm]	c		g500	MH□MA□□	
405	67	2.1	41	47	168	67	405	67	2.1				3.565	-B240	100-32	57
296	92	1.6	30	64	123	92	296	92	1.6				4.889	-B240	100-32	57
231	118	1.3	23	82	96	118	231	118	1.3				6.257	-B240	100-32	57
210	130	1.4	21	91	87	130	210	130	1.4				6.883	-B240	100-32	57
185	147	1.3	19	103	77	147	185	147	1.3				7.817	-B240	100-32	57
153	178	1.1	15	124	64	178	153	178	1.1				9.440	-B240	100-32	57
135	202	1.0	14	141	56	202	135	202	1.0				10.720	-B240	100-32	57

3-stage gearboxes

Mains operation 400 V, 50 Hz			Inverter operation 5 Hz -		- 20 Hz		- 50 Hz (1:10)			- 87 Hz (1:17.4)			i	Product		
n_2 [r/min]	M_2 [Nm]	c	n_{22} [r/min]	M_{22} [Nm]	n_{21} [r/min]	M_2 [Nm]	n_2 [r/min]	M_2 [Nm]	c	n_2 [r/min]	M_2 [Nm]	c		g500	MH□MA□□	
289	94	3.0	29	66	120	94	289	94	3.0	511	96	2.4	5.002	-B450	100-32	60
211	129	2.4	21	90	88	129	211	129	2.4	372	132	2.0	6.860	-B450	100-32	60
155	175	2.1	16	123	64	175	155	175	2.1				9.315	-B450	100-32	60
140	195	2.0	14	136	58	195	140	195	2.0				10.328	-B450	100-32	60
113	241	1.7	11	168	47	241	113	241	1.7				12.775	-B450	100-32	60
102	267	1.6	10	187	42	267	102	267	1.6				14.165	-B450	100-32	60
88	308	1.4	8.9	215	37	308	88	308	1.4				16.349	-B450	100-32	60
81	337	1.3	8.1	236	34	337	81	337	1.3	143	343	1.1	17.885	-B450	100-32	60
73	373	1.2	7.3	261	30	373	73	373	1.2				19.831	-B450	100-32	60
63	430	1.1	6.4	300	26	430	63	430	1.1				22.813	-B450	100-32	60



Selection tables, 4-pole motors

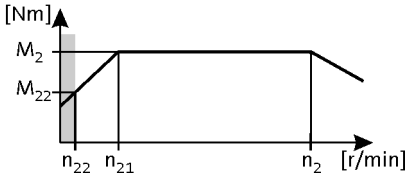

50 Hz: P_N = 4.0 kW
87 Hz: P_N = 7.1 kW

3-stage gearboxes

Mains operation 400 V, 50 Hz			Inverter operation 5 Hz -		- 20 Hz		- 50 Hz (1:10)			- 87 Hz (1:17.4)			i	Product		
n_2 [r/min]	M_2 [Nm]	c	n_{22} [r/min]	M_{22} [Nm]	n_{21} [r/min]	M_2 [Nm]	n_2 [r/min]	M_2 [Nm]	c	n_2 [r/min]	M_2 [Nm]	c		g500	MH□MA□□	
291	125	2.2	29	78	120	125	291	125	2.2				5.002	-B450	112-22	60
212	171	1.8	21	107	88	171	212	171	1.8				6.860	-B450	112-22	60
156	232	1.6	16	145	64	232	156	232	1.6				9.315	-B450	112-22	60
141	258	1.5	14	161	58	258	141	258	1.5				10.328	-B450	112-22	60
114	319	1.3	11	200	47	319	114	319	1.3				12.775	-B450	112-22	60
103	353	1.2	10	221	42	353	103	353	1.2				14.165	-B450	112-22	60
89	408	1.1	8.9	255	37	408	89	408	1.1				16.349	-B450	112-22	60
81	446	1.0	8.1	279	34	446	81	446	1.0				17.885	-B450	112-22	60



Selection tables, 2-pole motors

50 Hz: P_N = 0.18 kW

2-stage gearboxes

Mains operation 400 V, 50 Hz			i	Product		
n_2 [r/min]	M_2 [Nm]	c		g500	MD□MA□□	
140	12	5.8	19.556	-B110	063-11	63
122	13	5.8	22.489	-B110	063-11	63
109	15	4.8	25.185	-B110	063-11	63
116	17	4.8	28.963	-B110	063-11	63
106	19	4.2	31.919	-B110	063-11	63
73	22	3.9	37.400	-B110	063-11	63
69	24	3.9	40.000	-B110	063-11	63
60	27	3.7	46.000	-B110	063-11	63
52	31	2.0	52.698	-B110	063-11	63
45	36	2.2	60.603	-B110	063-11	63
45	36	3.0	61.045	-B110	063-11	63
36	46	2.4	76.500	-B110	063-11	63
27	60	1.8	100.786	-B110	063-11	63

3-stage gearboxes

Mains operation 400 V, 50 Hz			i	Product		
n_2 [r/min]	M_2 [Nm]	c		g500	MD□MA□□	
40	40	5.6	68.459	-B240	063-11	66
31	51	4.4	87.563	-B240	063-11	66
24	66	3.6	113.673	-B240	063-11	66
21	75	3.2	129.087	-B240	063-11	66
19	85	2.8	145.674	-B240	063-11	66
17	96	2.5	165.426	-B240	063-11	66
15	109	2.2	188.442	-B240	063-11	66
14	116	3.9	193.948	-B450	063-11	69
13	124	1.9	213.994	-B240	063-11	66
11	142	1.7	245.178	-B240	063-11	66
11	148	3.1	247.882	-B450	063-11	69
12	162	1.5	278.422	-B240	063-11	66
11	185	1.3	317.617	-B240	063-11	66
7.6	210	1.2	360.683	-B240	063-11	66



Selection tables, 2-pole motors

50 Hz: P_N = 0.25 kW

2-stage gearboxes

Mains operation 400 V, 50 Hz			i	Product		
n_2 [r/min]	M_2 [Nm]	c		g500	MD□MA□□	
237	10	5.2	11.449	-B110	063-31	63
213	11	4.9	12.698	-B110	063-31	63
186	12	4.9	14.603	-B110	063-31	63
139	16	4.1	19.556	-B110	063-31	63
121	19	4.1	22.489	-B110	063-31	63
108	21	3.4	25.185	-B110	063-31	63
117	24	3.4	28.963	-B110	063-31	63
106	27	3.0	31.919	-B110	063-31	63
74	31	2.9	36.707	-B110	063-31	63
73	31	2.8	37.400	-B110	063-31	63
68	33	2.8	40.000	-B110	063-31	63
59	38	2.7	46.000	-B110	063-31	63
56	40	2.6	48.167	-B110	063-31	63
51	44	1.5	52.698	-B110	063-31	63
45	51	1.6	60.603	-B110	063-31	63
44	51	2.2	61.045	-B110	063-31	63
40	56	2.8	67.113	-B240	063-31	66
36	64	2.8	76.213	-B240	063-31	66
35	64	1.7	76.500	-B110	063-31	63
27	84	1.3	100.786	-B110	063-31	63

3-stage gearboxes

Mains operation 400 V, 50 Hz			i	Product		
n_2 [r/min]	M_2 [Nm]	c		g500	MD□MA□□	
40	56	4.0	68.459	-B240	063-31	66
31	71	3.1	87.563	-B240	063-31	66
27	81	2.8	99.437	-B240	063-31	66
24	93	2.6	113.673	-B240	063-31	66
21	105	2.3	129.087	-B240	063-31	66
19	119	2.0	145.674	-B240	063-31	66
16	135	1.8	165.426	-B240	063-31	66
16	146	3.1	174.919	-B450	063-31	69
14	154	1.6	188.442	-B240	063-31	66
14	162	2.8	193.948	-B450	063-31	69
13	175	1.4	213.994	-B240	063-31	66
12	187	2.4	223.563	-B450	063-31	69
11	200	1.2	245.178	-B240	063-31	66
11	207	2.2	247.882	-B450	063-31	69
12	227	1.1	278.422	-B240	063-31	66



Selection tables, 2-pole motors

50 Hz: P_N = 0.37 kW

2-stage gearboxes

Mains operation 400 V, 50 Hz			i	Product		
n_2 [r/min]	M_2 [Nm]	c		g500	MD□MA□□	
260	13	5.7	10.466	-B110	071-11	63
238	14	5.2	11.449	-B110	071-11	63
214	16	4.7	12.698	-B110	071-11	63
186	18	4.1	14.603	-B110	071-11	63
175	19	3.9	15.556	-B110	071-11	63
152	22	3.6	17.889	-B110	071-11	63
139	24	3.4	19.556	-B110	071-11	63
121	28	3.1	22.489	-B110	071-11	63
108	31	2.9	25.185	-B110	071-11	63
116	36	2.5	28.963	-B110	071-11	63
105	39	2.3	31.919	-B110	071-11	63
74	45	2.0	36.707	-B110	071-11	63
73	46	1.9	37.400	-B110	071-11	63
68	49	1.9	40.000	-B110	071-11	63
59	57	1.8	46.000	-B110	071-11	63
57	59	1.7	48.167	-B110	071-11	63
46	74	3.0	59.630	-B240	071-11	66
45	75	1.5	61.045	-B110	071-11	63
41	83	2.2	67.113	-B240	071-11	66
36	94	2.2	76.213	-B240	071-11	66
36	94	1.2	76.500	-B110	071-11	63

3-stage gearboxes

Mains operation 400 V, 50 Hz			i	Product		
n_2 [r/min]	M_2 [Nm]	c		g500	MD□MA□□	
40	82	2.7	68.459	-B240	071-11	66
35	94	2.4	77.741	-B240	071-11	66
31	105	2.1	87.563	-B240	071-11	66
27	120	1.9	99.437	-B240	071-11	66
24	137	1.8	113.673	-B240	071-11	66
22	152	3.0	123.487	-B450	071-11	69
21	155	1.6	129.087	-B240	071-11	66
19	178	2.5	144.128	-B450	071-11	69
19	175	1.4	145.674	-B240	071-11	66
17	197	2.3	159.807	-B450	071-11	69
16	199	1.2	165.426	-B240	071-11	66
16	216	2.1	174.919	-B450	071-11	69
14	227	1.1	188.442	-B240	071-11	66
14	239	1.9	193.948	-B450	071-11	69
12	276	1.6	223.563	-B450	071-11	69
11	306	1.5	247.882	-B450	071-11	69



Selection tables, 2-pole motors

50 Hz: P_N = 0.55 kW

2-stage gearboxes

Mains operation 400 V, 50 Hz			i	Product		
n_2 [r/min]	M_2 [Nm]	c		g500	MD□MA□□	
507	10	5.1	5.185	-B110	071-31	63
441	11	5.1	5.963	-B110	071-31	63
370	13	4.7	7.111	-B110	071-31	63
322	16	4.3	8.178	-B110	071-31	63
289	17	4.0	9.101	-B110	071-31	63
251	20	3.7	10.466	-B110	071-31	63
230	22	3.4	11.449	-B110	071-31	63
207	24	3.1	12.698	-B110	071-31	63
180	28	2.7	14.603	-B110	071-31	63
169	30	2.6	15.556	-B110	071-31	63
147	34	2.4	17.889	-B110	071-31	63
135	37	2.2	19.556	-B110	071-31	63
117	43	2.0	22.489	-B110	071-31	63
104	48	1.9	25.185	-B110	071-31	63
112	55	1.7	28.963	-B110	071-31	63
102	61	1.5	31.919	-B110	071-31	63
79	63	3.1	33.433	-B240	071-31	66
72	70	1.3	36.707	-B110	071-31	63
70	71	1.2	37.400	-B110	071-31	63
69	72	2.8	37.967	-B240	071-31	66
66	76	1.2	40.000	-B110	071-31	63
61	82	2.8	43.267	-B240	071-31	66
57	87	1.2	46.000	-B110	071-31	63
55	91	1.1	48.167	-B110	071-31	63
54	93	2.4	49.133	-B240	071-31	66
50	100	2.2	52.510	-B240	071-31	66
44	113	2.0	59.630	-B240	071-31	66
39	127	1.4	67.113	-B240	071-31	66
35	145	1.4	76.213	-B240	071-31	66

3-stage gearboxes

Mains operation 400 V, 50 Hz			i	Product		
n_2 [r/min]	M_2 [Nm]	c		g500	MD□MA□□	
38	127	1.8	68.459	-B240	071-31	66
34	144	1.6	77.741	-B240	071-31	66
30	162	1.4	87.563	-B240	071-31	66
29	170	2.5	89.534	-B450	071-31	69
27	188	2.3	99.274	-B450	071-31	69
26	184	1.2	99.437	-B240	071-31	66
24	211	2.1	111.372	-B450	071-31	69
23	210	1.1	113.673	-B240	071-31	66



Selection tables, 2-pole motors

50 Hz: P_N = 0.55 kW

3-stage gearboxes

Mains operation 400 V, 50 Hz			i	Product		
n_2 [r/min]	M_2 [Nm]	c		g500	MD□MA□□	
21	234	1.9	123.487	-B450	071-31	69
20	239	1.0	129.087	-B240	071-31	66
18	273	1.7	144.128	-B450	071-31	69
17	303	1.5	159.807	-B450	071-31	69
15	332	1.4	174.919	-B450	071-31	69
14	368	1.2	193.948	-B450	071-31	69
12	424	1.1	223.563	-B450	071-31	69



Selection tables, 6-pole motors

50 Hz: P_N = 0.18 kW

2-stage gearboxes

Mains operation 400 V, 50 Hz			i	Product		
n_2 [r/min]	M_2 [Nm]	c		g500	MD□MA□□	
114	14	5.6	8.178	-B110	071-13	72
102	16	5.3	9.101	-B110	071-13	72
109	18	4.8	10.466	-B110	071-13	72
81	20	4.5	11.449	-B110	071-13	72
73	22	4.0	12.698	-B110	071-13	72
64	26	3.5	14.603	-B110	071-13	72
60	27	3.4	15.556	-B110	071-13	72
52	31	3.1	17.889	-B110	071-13	72
48	34	2.9	19.556	-B110	071-13	72
41	39	2.6	22.489	-B110	071-13	72
37	44	2.4	25.185	-B110	071-13	72
32	51	2.2	28.963	-B110	071-13	72
29	56	1.9	31.919	-B110	071-13	72
25	64	1.7	36.707	-B110	071-13	72
25	66	1.6	37.400	-B110	071-13	72
23	70	1.4	40.000	-B110	071-13	72
22	76	3.2	43.267	-B240	071-13	75
20	81	1.4	46.000	-B110	071-13	72
19	85	1.3	48.167	-B110	071-13	72
19	86	2.8	49.133	-B240	071-13	75
18	92	2.5	52.510	-B240	071-13	75
16	105	2.3	59.630	-B240	071-13	75
15	107	1.0	61.045	-B110	071-13	72
14	118	1.5	67.113	-B240	071-13	75
12	134	1.5	76.213	-B240	071-13	75

3-stage gearboxes

Mains operation 400 V, 50 Hz			i	Product		
n_2 [r/min]	M_2 [Nm]	c		g500	MD□MA□□	
14	117	2.1	68.459	-B240	071-13	75
12	133	1.8	77.741	-B240	071-13	75
11	150	1.6	87.563	-B240	071-13	75
10	157	2.9	89.534	-B450	071-13	78
12	174	2.6	99.274	-B450	071-13	78
12	170	1.4	99.437	-B240	071-13	75
10	196	2.3	111.372	-B450	071-13	78
10	195	1.2	113.673	-B240	071-13	75
7.5	217	2.1	123.487	-B450	071-13	78
7.2	221	1.1	129.087	-B240	071-13	75
6.5	253	1.8	144.128	-B450	071-13	78
5.8	281	1.6	159.807	-B450	071-13	78



Selection tables, 6-pole motors

50 Hz: P_N = 0.18 kW

3-stage gearboxes

Mains operation 400 V, 50 Hz			i	Product		
n_2 [r/min]	M_2 [Nm]	c		g500	MD□MA□□	
5.3	307	1.5	174.919	-B450	071-13	78
4.8	340	1.3	193.948	-B450	071-13	78
4.2	392	1.2	223.563	-B450	071-13	78
3.8	435	1.0	247.882	-B450	071-13	78



Selection tables, 6-pole motors

50 Hz: P_N = 0.25 kW

2-stage gearboxes

Mains operation 400 V, 50 Hz			i	Product		
n_2 [r/min]	M_2 [Nm]	c		g500	MD□MA□□	
179	13	4.7	5.185	-B110	071-33	72
156	15	4.7	5.963	-B110	071-33	72
131	17	4.4	7.111	-B110	071-33	72
114	20	4.1	8.178	-B110	071-33	72
102	22	3.8	9.101	-B110	071-33	72
109	26	3.5	10.466	-B110	071-33	72
81	28	3.2	11.449	-B110	071-33	72
73	31	2.9	12.698	-B110	071-33	72
64	36	2.5	14.603	-B110	071-33	72
60	38	2.4	15.556	-B110	071-33	72
52	44	2.2	17.889	-B110	071-33	72
48	48	2.1	19.556	-B110	071-33	72
41	55	1.9	22.489	-B110	071-33	72
37	61	1.8	25.185	-B110	071-33	72
32	71	1.6	28.963	-B110	071-33	72
31	74	3.2	30.522	-B240	071-33	75
29	78	1.4	31.919	-B110	071-33	72
28	82	2.9	33.433	-B240	071-33	75
25	90	1.2	36.707	-B110	071-33	72
25	91	1.2	37.400	-B110	071-33	72
25	93	2.6	37.967	-B240	071-33	75
23	98	1.0	40.000	-B110	071-33	72
22	106	2.3	43.267	-B240	071-33	75
19	120	2.0	49.133	-B240	071-33	75
18	128	1.8	52.510	-B240	071-33	75
16	145	1.7	59.630	-B240	071-33	75
14	164	1.1	67.113	-B240	071-33	75
12	186	1.1	76.213	-B240	071-33	75

3-stage gearboxes

Mains operation 400 V, 50 Hz			i	Product		
n_2 [r/min]	M_2 [Nm]	c		g500	MD□MA□□	
21	110	3.1	45.245	-B450	071-33	78
19	122	3.1	50.167	-B450	071-33	78
15	152	3.0	62.262	-B450	071-33	78
14	163	1.5	68.459	-B240	071-33	75
12	185	1.3	77.741	-B240	071-33	75
11	208	1.2	87.563	-B240	071-33	75
10	218	2.1	89.534	-B450	071-33	78
12	242	1.9	99.274	-B450	071-33	78
12	236	1.0	99.437	-B240	071-33	75



Selection tables, 6-pole motors

50 Hz: P_N = 0.25 kW

3-stage gearboxes

Mains operation 400 V, 50 Hz			i	Product		
n_2 [r/min]	M_2 [Nm]	c		g500	MD□MA□□	
10	272	1.7	111.372	-B450	071-33	78
7.5	301	1.5	123.487	-B450	071-33	78
6.5	351	1.3	144.128	-B450	071-33	78
5.8	390	1.2	159.807	-B450	071-33	78
5.3	427	1.1	174.919	-B450	071-33	78



Selection tables, 6-pole motors

50 Hz: P_N = 0.37 kW

2-stage gearboxes

Mains operation 400 V, 50 Hz			i	Product		
n_2 [r/min]	M_2 [Nm]	c		g500	MD□MA□□	
183	18	3.8	5.185	-B110	080-13	72
159	21	3.4	5.963	-B110	080-13	72
152	22	5.7	6.257	-B240	080-13	75
134	25	3.1	7.111	-B110	080-13	72
116	29	2.8	8.178	-B110	080-13	72
104	32	2.6	9.101	-B110	080-13	72
111	37	2.4	10.466	-B110	080-13	72
101	40	2.2	11.449	-B110	080-13	72
75	45	2.0	12.698	-B110	080-13	72
65	52	1.7	14.603	-B110	080-13	72
61	55	1.7	15.556	-B110	080-13	72
53	63	1.5	17.889	-B110	080-13	72
49	69	1.5	19.556	-B110	080-13	72
42	79	1.3	22.489	-B110	080-13	72
41	83	2.9	23.450	-B240	080-13	75
38	89	1.2	25.185	-B110	080-13	72
35	95	2.5	26.878	-B240	080-13	75
33	102	1.1	28.963	-B110	080-13	72
31	108	2.2	30.522	-B240	080-13	75
28	118	2.0	33.433	-B240	080-13	75
25	134	1.8	37.967	-B240	080-13	75
22	153	1.6	43.267	-B240	080-13	75
19	174	1.4	49.133	-B240	080-13	75
18	186	1.3	52.510	-B240	080-13	75
16	211	1.1	59.630	-B240	080-13	75

3-stage gearboxes

Mains operation 400 V, 50 Hz			i	Product		
n_2 [r/min]	M_2 [Nm]	c		g500	MD□MA□□	
24	142	3.2	40.330	-B450	080-13	78
21	160	2.8	45.245	-B450	080-13	78
19	177	2.5	50.167	-B450	080-13	78
17	198	2.3	56.154	-B450	080-13	78
15	220	2.1	62.262	-B450	080-13	78
14	236	1.0	68.459	-B240	080-13	75
14	243	1.9	68.788	-B450	080-13	78
13	269	1.7	76.271	-B450	080-13	78
11	316	1.4	89.534	-B450	080-13	78
12	351	1.3	99.274	-B450	080-13	78
10	393	1.1	111.372	-B450	080-13	78
7.7	436	1.0	123.487	-B450	080-13	78



Selection tables, 6-pole motors

50 Hz: P_N = 0.55 kW

2-stage gearboxes

Mains operation 400 V, 50 Hz			i	Product		
n_2 [r/min]	M_2 [Nm]	c		g500	MD□MA□□	
261	19	4.2	3.565	-B240	080-33	75
179	28	2.5	5.185	-B110	080-33	72
156	32	2.3	5.963	-B110	080-33	72
149	34	3.7	6.257	-B240	080-33	75
131	38	2.0	7.111	-B110	080-33	72
114	44	1.9	8.178	-B110	080-33	72
102	49	1.7	9.101	-B110	080-33	72
109	56	1.6	10.466	-B110	080-33	72
81	61	1.5	11.449	-B110	080-33	72
77	65	3.2	12.081	-B240	080-33	75
73	68	1.3	12.698	-B110	080-33	72
68	74	3.0	13.719	-B240	080-33	75
64	78	1.2	14.603	-B110	080-33	72
62	81	2.8	15.008	-B240	080-33	75
60	83	1.1	15.556	-B110	080-33	72
55	90	2.7	16.857	-B240	080-33	75
52	96	1.0	17.889	-B110	080-33	72
49	103	2.3	19.143	-B240	080-33	75
45	111	2.2	20.650	-B240	080-33	75
40	126	1.9	23.450	-B240	080-33	75
35	144	1.7	26.878	-B240	080-33	75
31	164	1.5	30.522	-B240	080-33	75
28	179	1.3	33.433	-B240	080-33	75
25	204	1.2	37.967	-B240	080-33	75
22	232	1.0	43.267	-B240	080-33	75

3-stage gearboxes

Mains operation 400 V, 50 Hz			i	Product		
n_2 [r/min]	M_2 [Nm]	c		g500	MD□MA□□	
33	150	3.0	27.945	-B450	080-33	78
30	166	2.7	30.985	-B450	080-33	78
26	195	2.3	36.373	-B450	080-33	78
23	216	2.1	40.330	-B450	080-33	78
21	243	1.9	45.245	-B450	080-33	78
19	269	1.7	50.167	-B450	080-33	78
17	301	1.5	56.154	-B450	080-33	78
15	334	1.4	62.262	-B450	080-33	78
14	369	1.2	68.788	-B450	080-33	78
12	409	1.1	76.271	-B450	080-33	78



Dimensions, notes

Notes on the dimensions

The following legend shows the layout of the dimension sheets.

Product gearbox

g500-B110

Driven shaft design

Abmessungen mit Hohlwelle

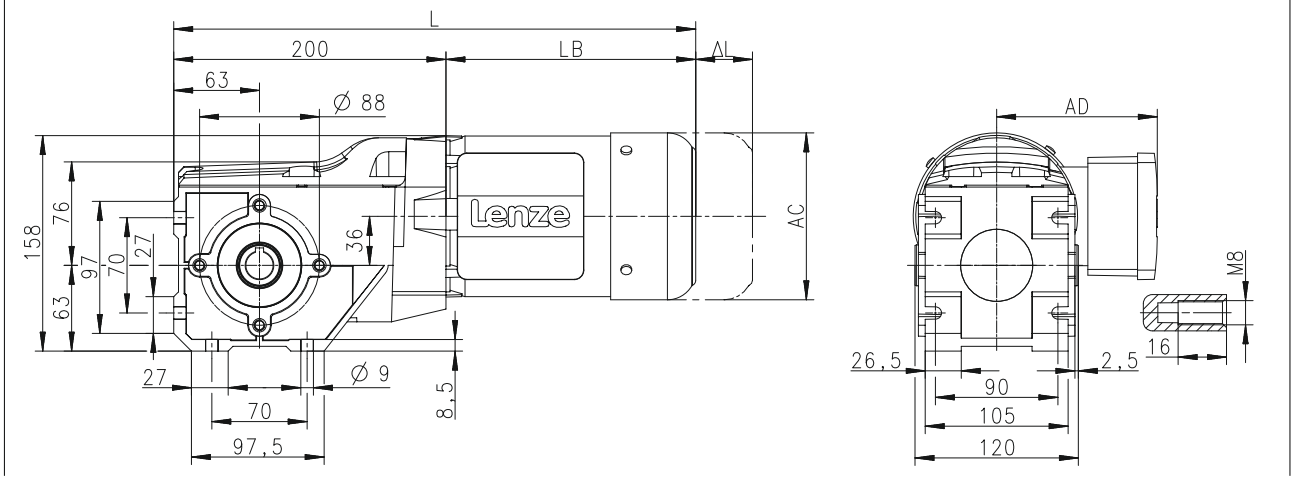

Product Motor

Produkt			MD□MA□□							
			063-12	063-32	063-42	071-32	071-42	080-32	080-42	090-32
Abmessungen										
Gesamtlänge	**L**	**[mm]**		358		378		395		419
Länge Motor	**LB**	**[mm]**		187		207		224.5		248
Länge Motoranbauten	**Δ L**	**[mm]**		170		165		183		181
Motordurchmesser	**AC**	**[mm]**		123		139		156		176
Abstand Motor/Anschluss	**AD**	**[mm]**		100		109		150		157

Distance of motor centre to the end of terminal box

Total length of the drive without built-on accessories

Motor diameter

Motor length without built-on accessories

Additional length of the built-on accessories (longest version)



Dimensions, 4-pole motors

g500-B45

Dimensions with hollow shaft

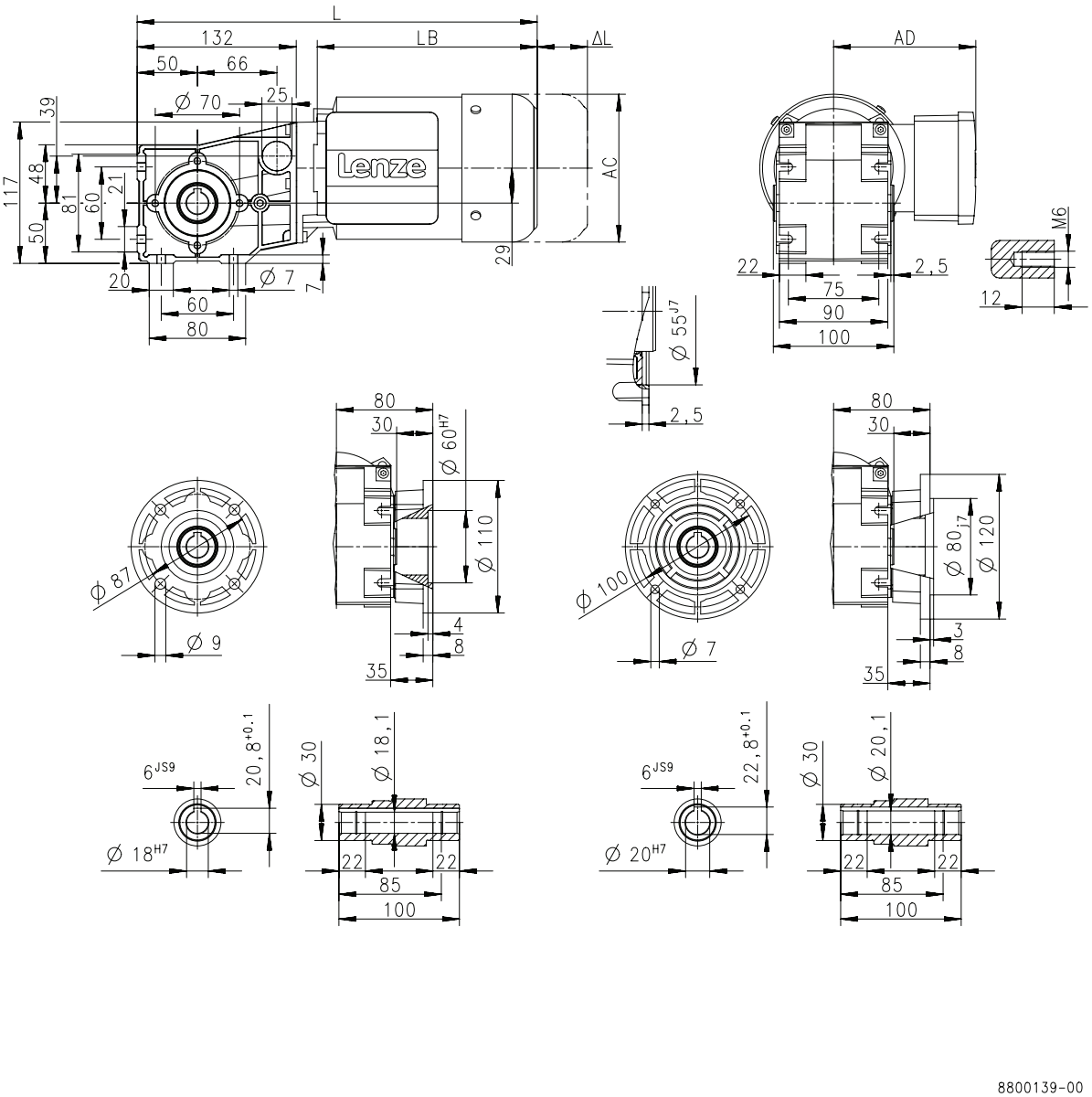

Product			MD□MA□□						
			063-02	063-12	063-22	063-32	063-42	071-32	071-42
Dimensions									
Total length	**L**	**[mm]**	305	332	305	332		352	
Motor length	**LB**	**[mm]**	156	183	156	183		203	
Length of motor options	**Δ L**	**[mm]**	135	170	135	170		165	
Motor diameter	**AC**	**[mm]**	123					139	
Distance motor/connection	**AD**	**[mm]**	100					109	



Dimensions, 4-pole motors

g500-B45

Dimensions with solid shaft

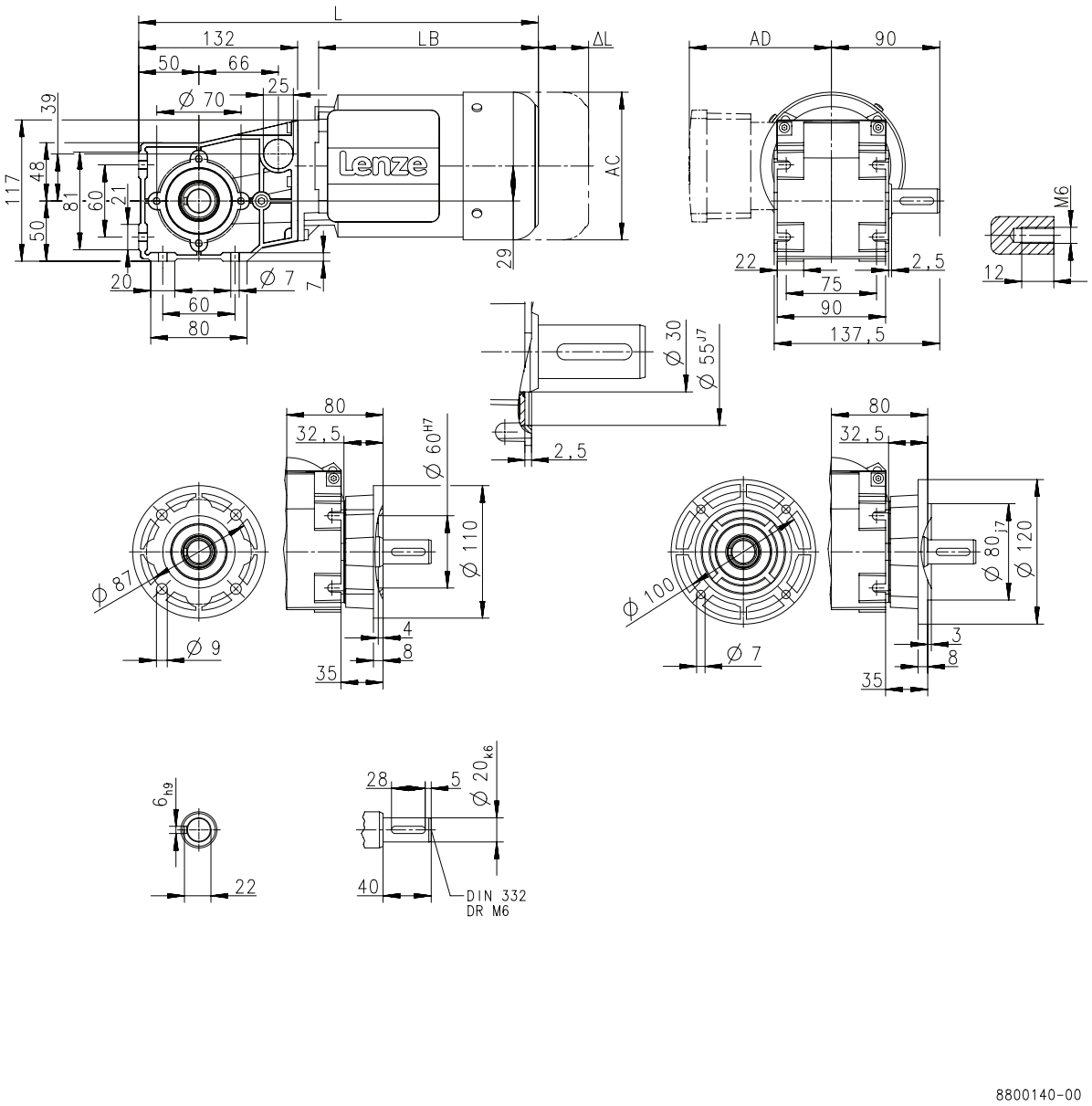

Product			MD□MA□□						
			063-02	063-12	063-22	063-32	063-42	071-32	071-42
Dimensions									
Total length	**L**	**[mm]**	305	332	305	332		352	
Motor length	**LB**	**[mm]**	156	183	156	183		203	
Length of motor options	**Δ L**	**[mm]**	135	170	135	170		165	
Motor diameter	**AC**	**[mm]**	123					139	
Distance motor/connection	**AD**	**[mm]**	100					109	



Dimensions, 4-pole motors

g500-B45

Dimensions with shrink disc

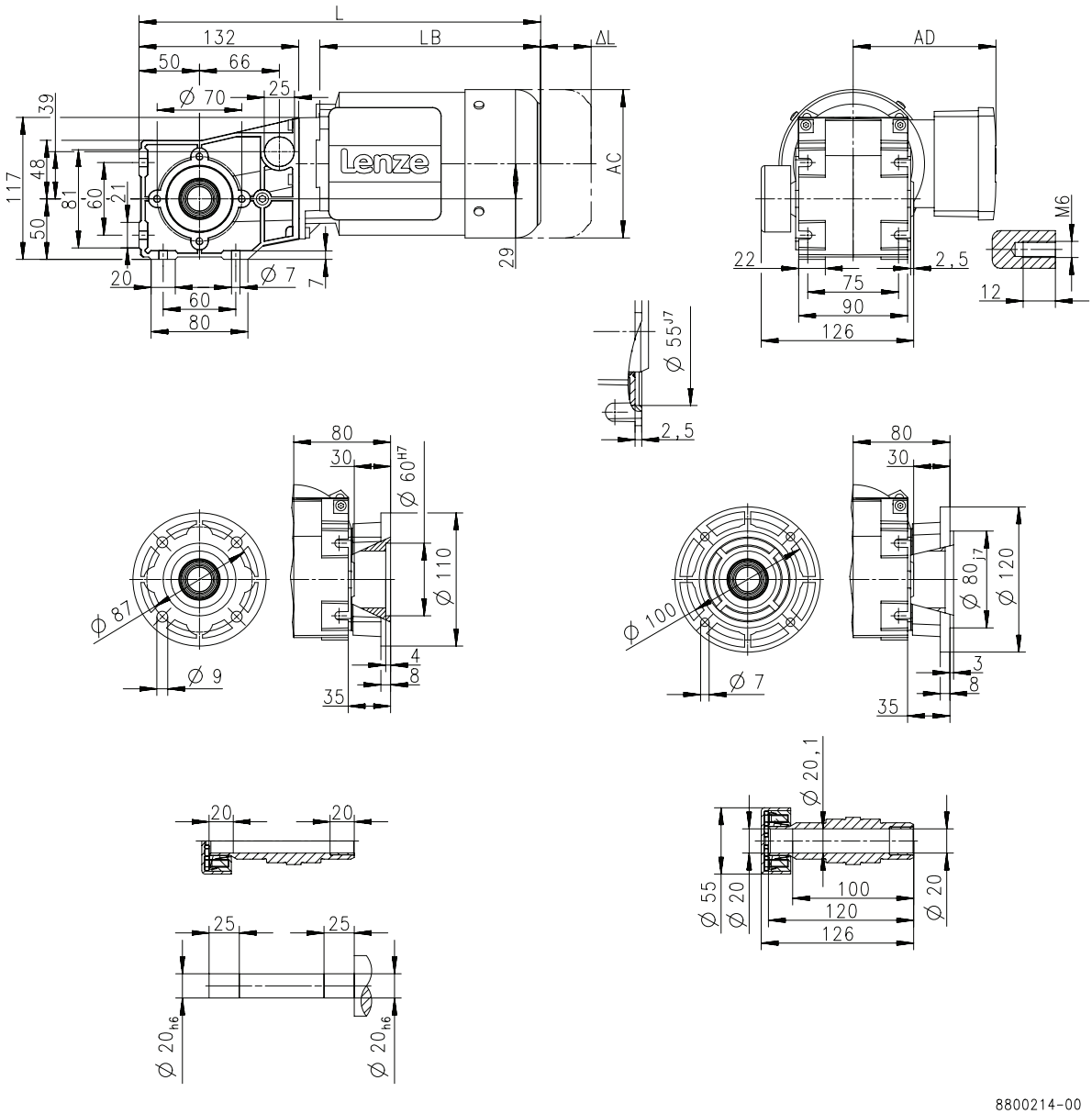

Product			MD□MA□□						
			063-02	063-12	063-22	063-32	063-42	071-32	071-42
Dimensions									
Total length	**L**	**[mm]**	305	332	305	332		352	
Motor length	**LB**	**[mm]**	156	183	156	183		203	
Length of motor options	**Δ L**	**[mm]**	135	170	135	170		165	
Motor diameter	**AC**	**[mm]**	123					139	
Distance motor/connection	**AD**	**[mm]**	100					109	



Dimensions, 4-pole motors

g500-B110

Dimensions with hollow shaft

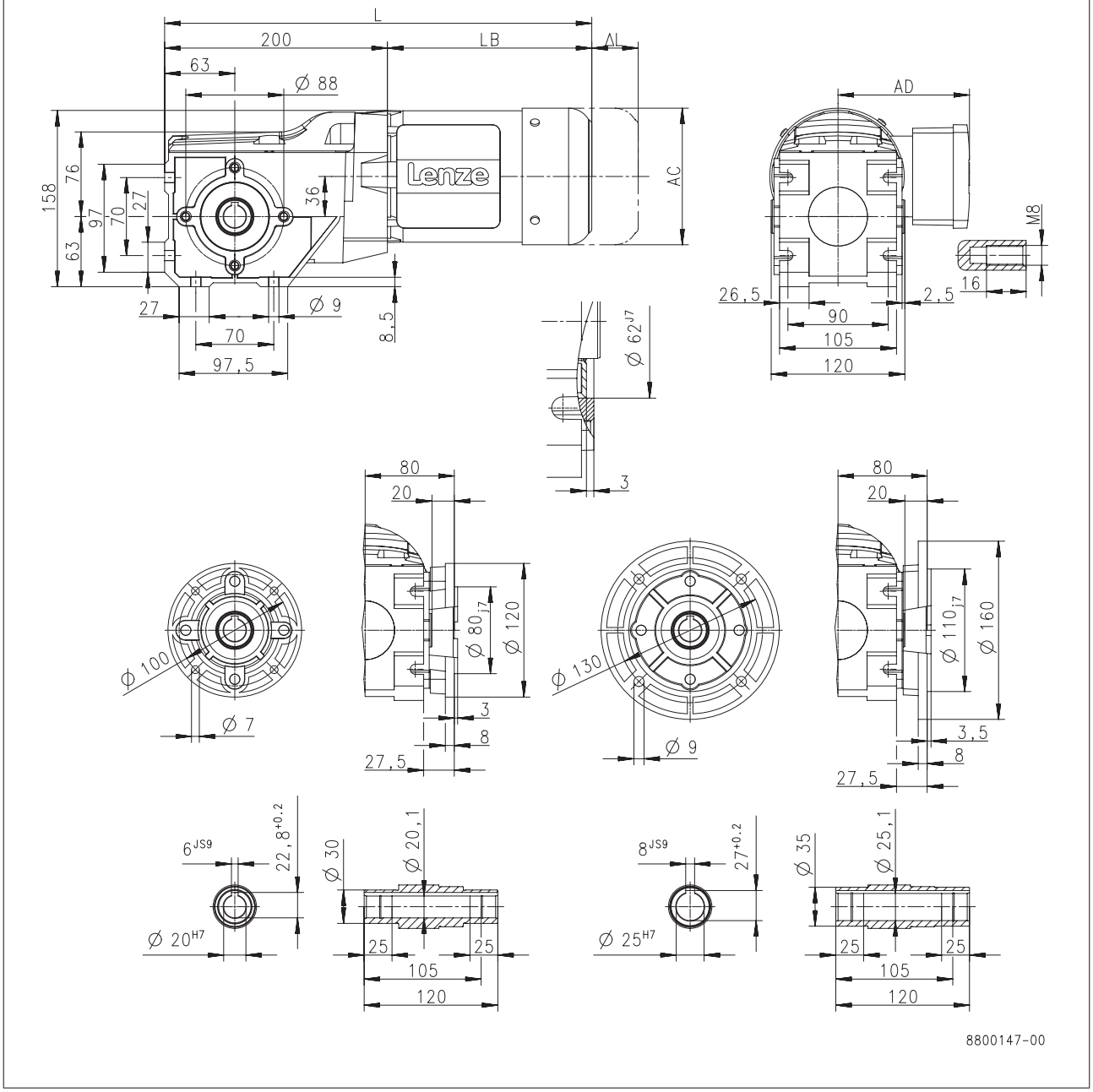

Product			MD□MA□□					MH□MA□□		
			063-12	063-32	063-42	071-32	071-42	080-32	090-12	090-32
Dimensions										
Total length	**L**	**[mm]**	383			403		426	485	
Motor length	**LB**	**[mm]**	183			203		226	285	
Length of motor options	**Δ L**	**[mm]**	170			165		183	181	
Motor diameter	**AC**	**[mm]**	123			139		156	176	
Distance motor/connection	**AD**	**[mm]**	100			109		150	152	157



Dimensions, 4-pole motors

g500-B110

Dimensions with solid shaft

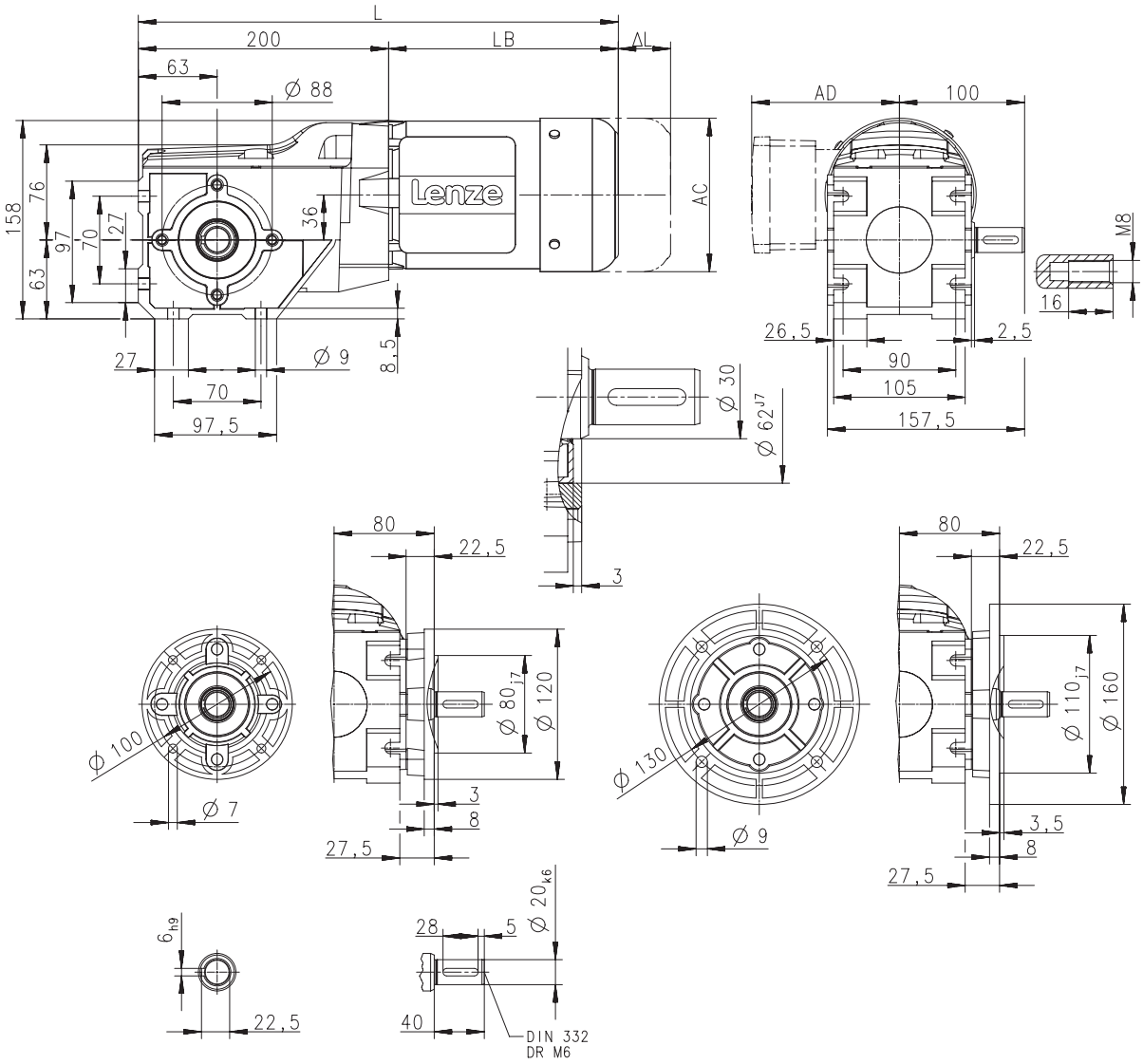

Product			MD□MA□□					MH□MA□□		
			063-12	063-32	063-42	071-32	071-42	080-32	090-12	090-32
Dimensions										
Total length	**L**	**[mm]**	383			403		426	485	
Motor length	**LB**	**[mm]**	183			203		226	285	
Length of motor options	**Δ L**	**[mm]**	170			165		183	181	
Motor diameter	**AC**	**[mm]**	123			139		156	176	
Distance motor/connection	**AD**	**[mm]**	100			109		150	152	157



Dimensions, 4-pole motors

g500-B110

Dimensions with shrink disc

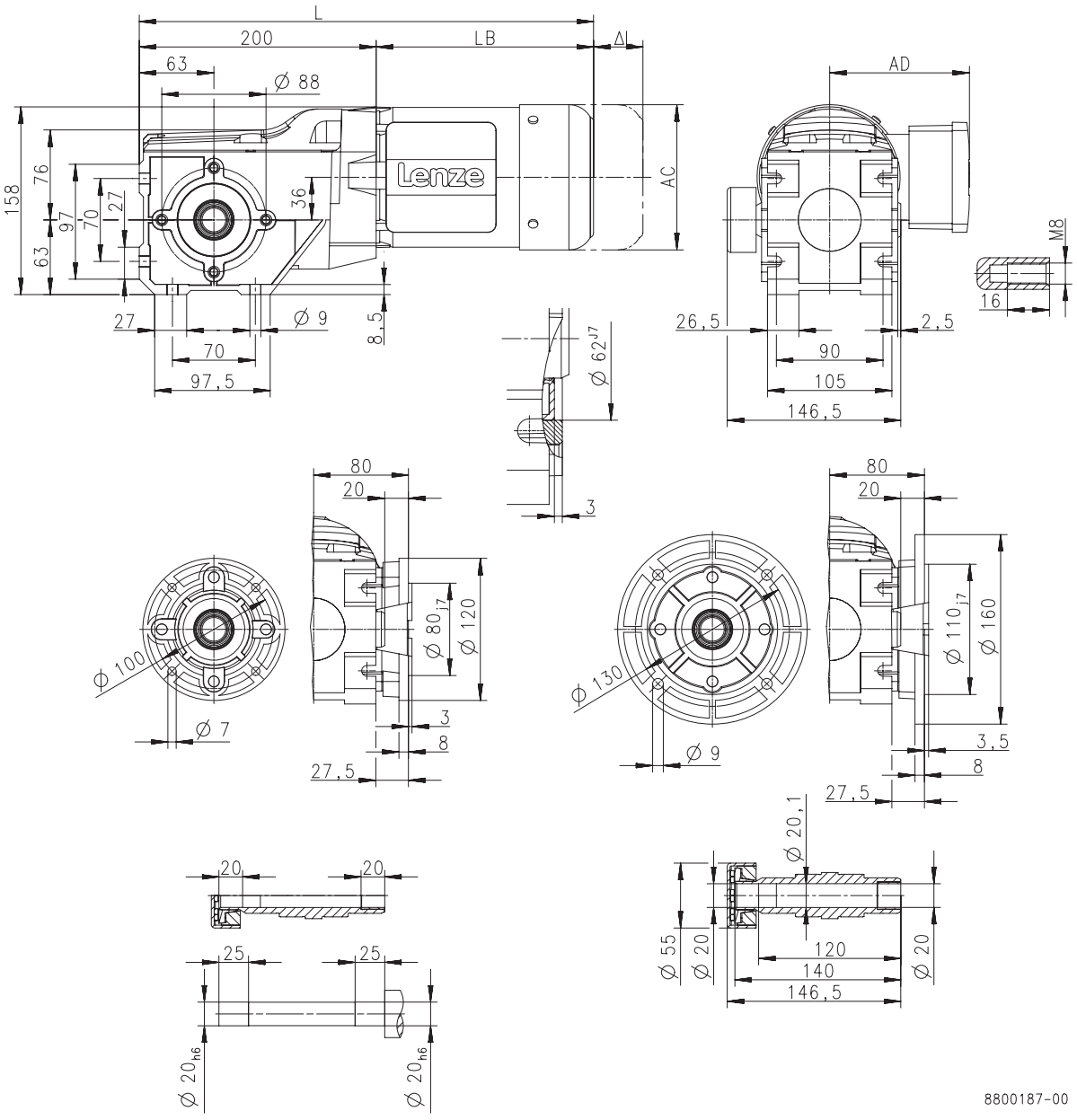

Product			MD□MA□□					MH□MA□□		
			063-12	063-32	063-42	071-32	071-42	080-32	090-12	090-32
Dimensions										
Total length	**L**	**[mm]**	383			403		426	485	
Motor length	**LB**	**[mm]**	183			203		226	285	
Length of motor options	**Δ L**	**[mm]**	170			165		183	181	
Motor diameter	**AC**	**[mm]**	123			139		156	176	
Distance motor/connection	**AD**	**[mm]**	100			109		150	152	157



Dimensions, 4-pole motors

g500-B240

Dimensions with hollow shaft

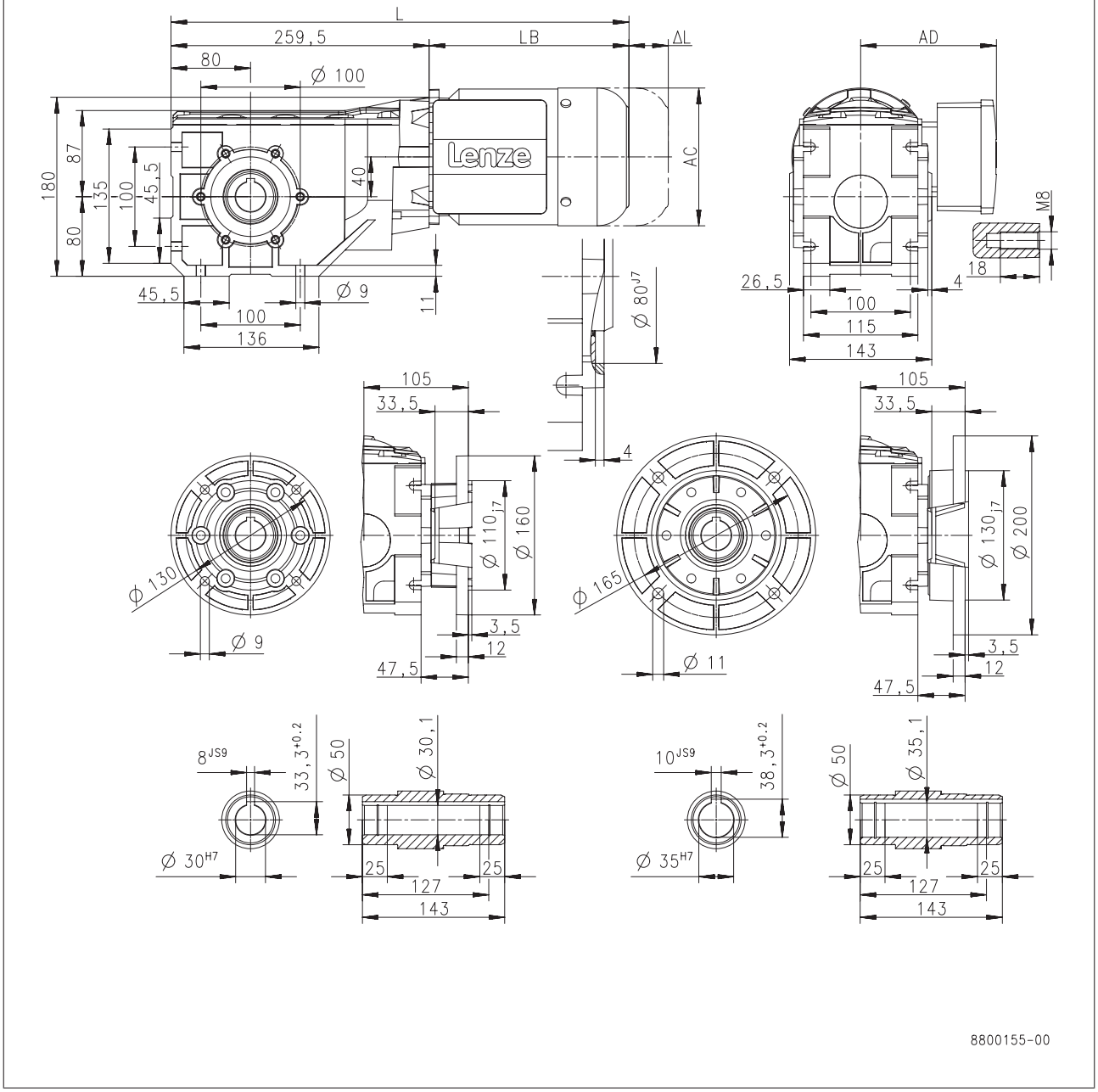

Product			MD□MA□□					MH□MA□□				
			063-12	063-32	063-42	071-32	071-42	080-32	090-12	090-32	100-12	100-32
Dimensions												
Total length	**L**	**[mm]**	443			463		486	545		581	597
Motor length	**LB**	**[mm]**	183			203		226	285		321	337
Length of motor options	**Δ L**	**[mm]**	170			165		183	181		170	
Motor diameter	**AC**	**[mm]**	123			139		156	176		194	
Distance motor/connection	**AD**	**[mm]**	100			109		150	152	157	166	



Dimensions, 4-pole motors

g500-B240

Dimensions with solid shaft

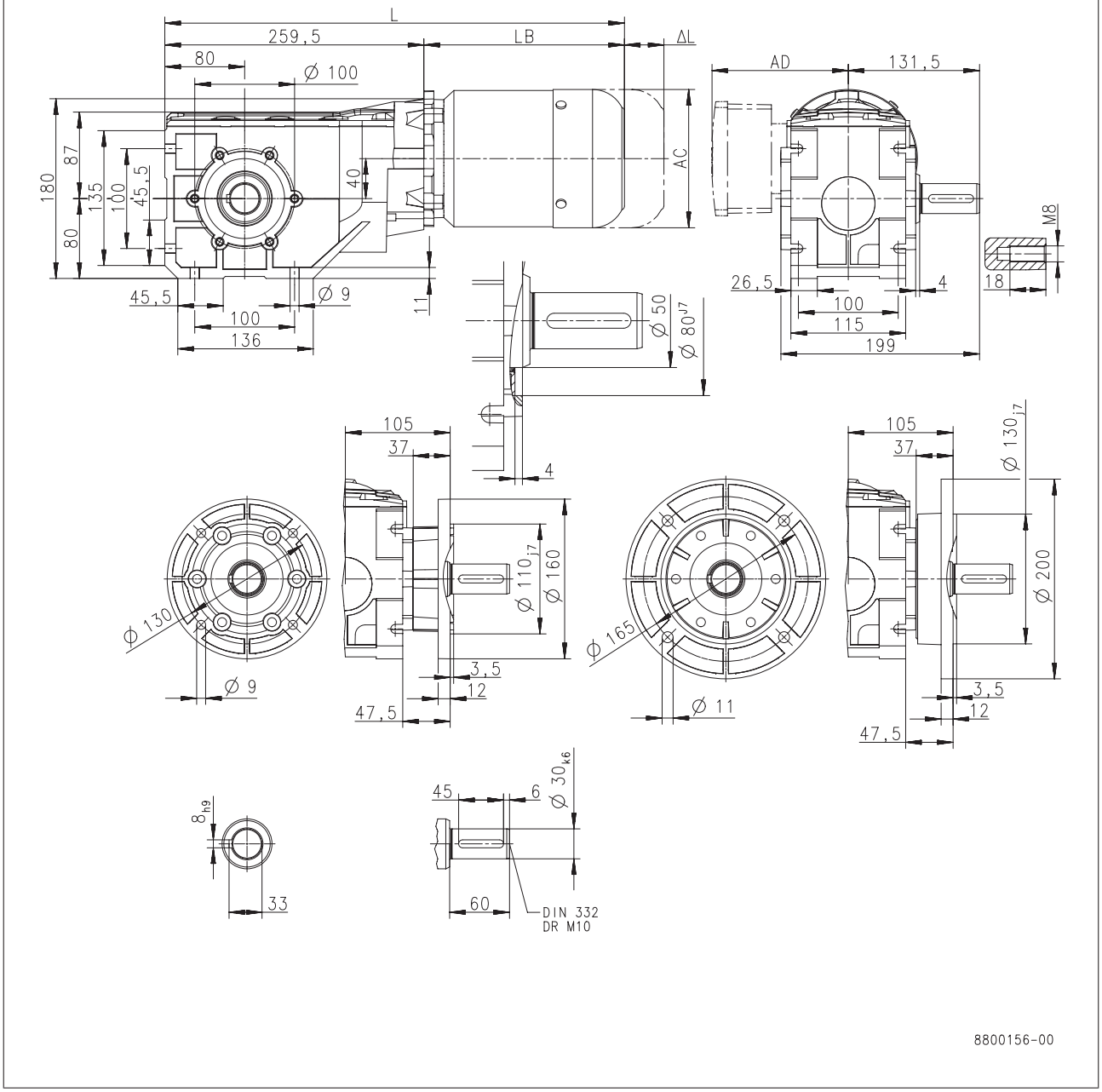

Product			MD□MA□□					MH□MA□□				
			063-12	063-32	063-42	071-32	071-42	080-32	090-12	090-32	100-12	100-32
Dimensions												
Total length	**L**	**[mm]**	443			463		486	545		581	597
Motor length	**LB**	**[mm]**	183			203		226	285		321	337
Length of motor options	**Δ L**	**[mm]**	170			165		183	181		170	
Motor diameter	**AC**	**[mm]**	123			139		156	176		194	
Distance motor/connection	**AD**	**[mm]**	100			109		150	152	157	166	



Dimensions, 4-pole motors

g500-B240

Dimensions with shrink disc

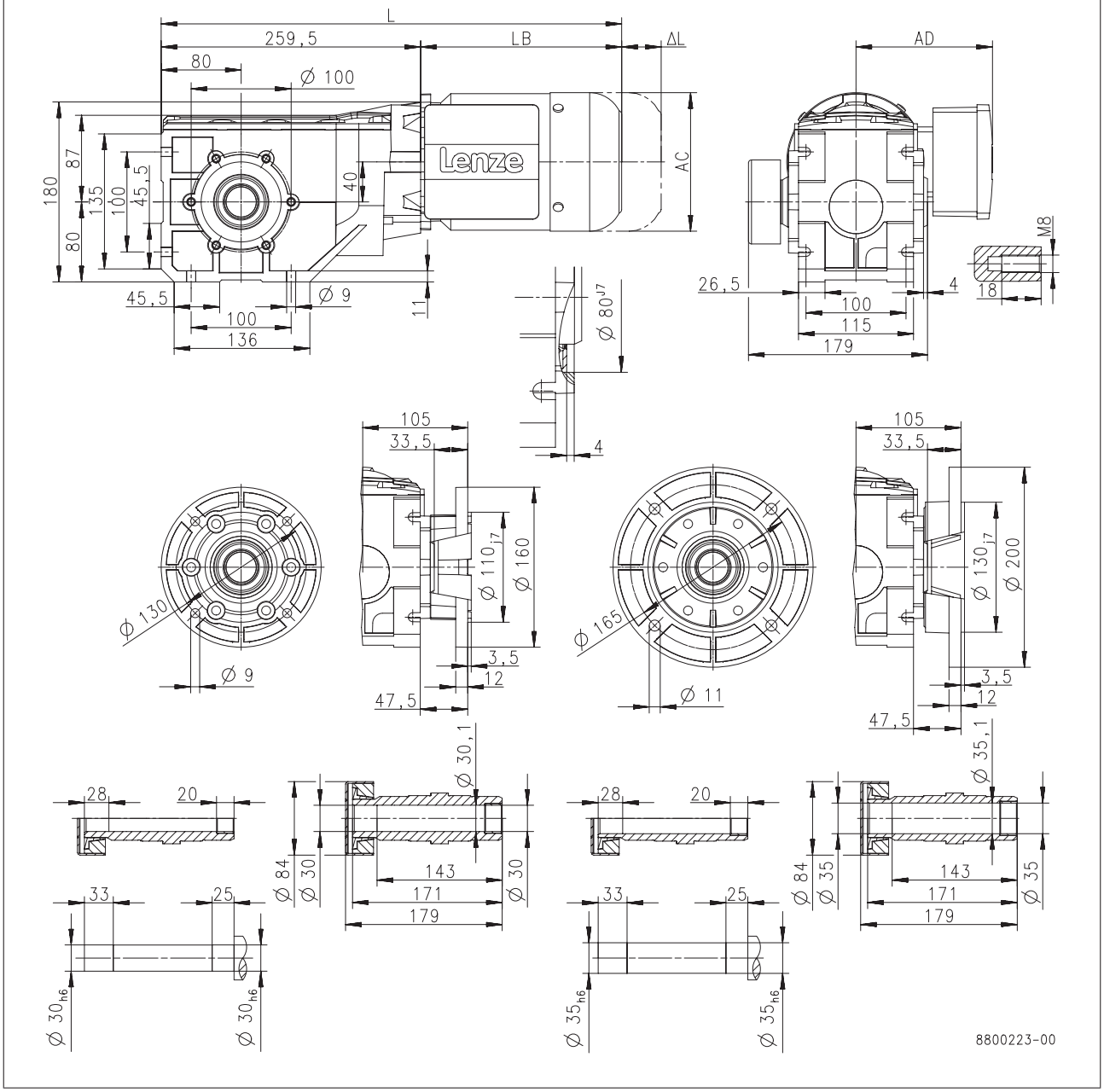

Product			MD□MA□□					MH□MA□□				
			063-12	063-32	063-42	071-32	071-42	080-32	090-12	090-32	100-12	100-32
Dimensions												
Total length	**L**	**[mm]**	443			463		486	545		581	597
Motor length	**LB**	**[mm]**	183			203		226	285		321	337
Length of motor options	**Δ L**	**[mm]**	170			165		183	181		170	
Motor diameter	**AC**	**[mm]**	123			139		156	176		194	
Distance motor/connection	**AD**	**[mm]**	100			109		150	152	157	166	



Dimensions, 4-pole motors

g500-B450

Dimensions with hollow shaft

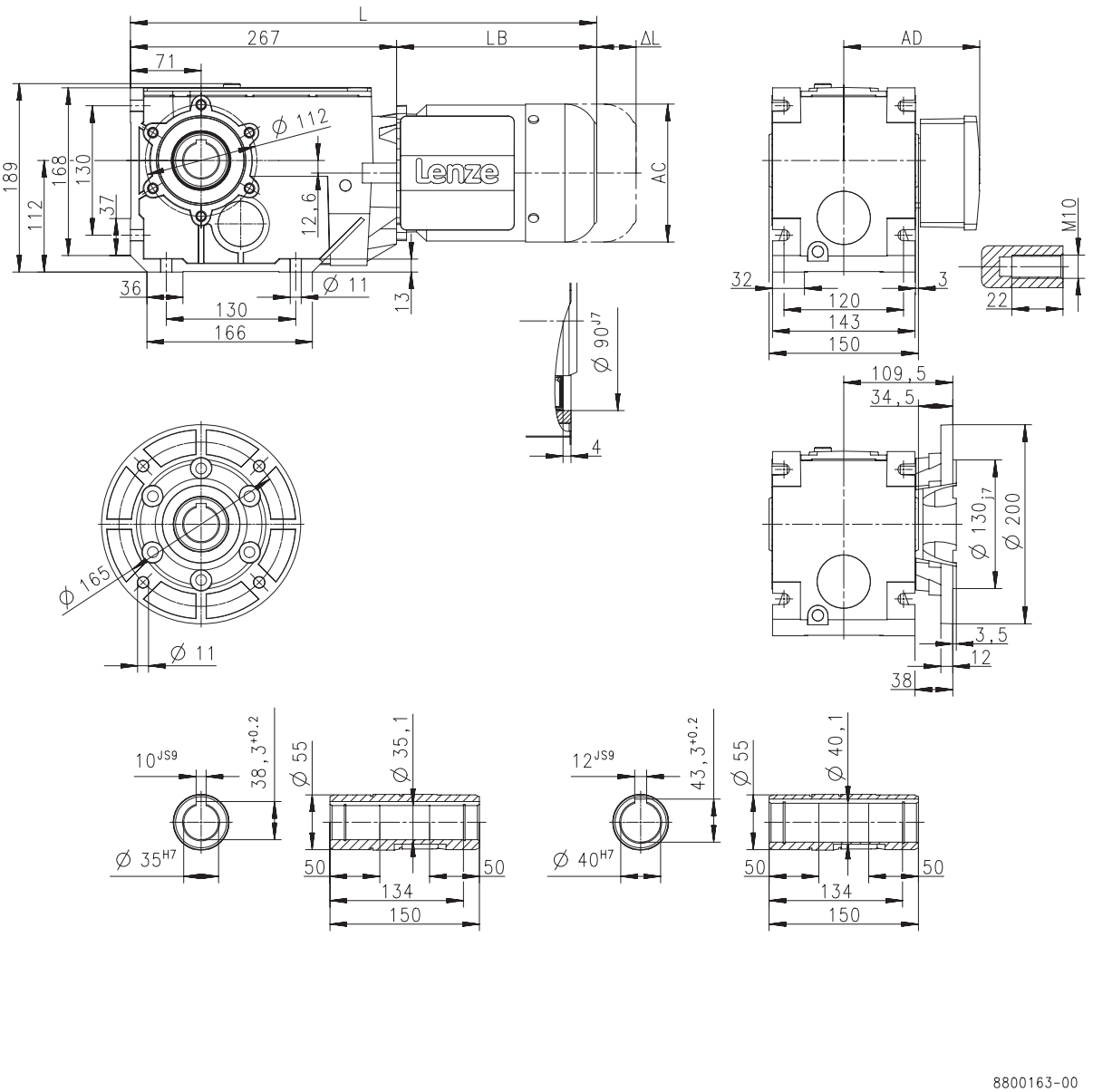

Product			MD□MA□□					MH□MA□□					
			063-12	063-32	063-42	071-32	071-42	080-32	090-12	090-32	100-12	100-32	112-22
Dimensions													
Total length	**L**	**[mm]**	450			470		493	552		588	604	647
Motor length	**LB**	**[mm]**	183			203		226	285		321	337	380
Length of motor options	**Δ L**	**[mm]**	170			165		183	181		170		183
Motor diameter	**AC**	**[mm]**	123			139		156	176		194		218
Distance motor/connection	**AD**	**[mm]**	100			109		150	152	157	166		176



Dimensions, 4-pole motors

g500-B450

Dimensions with solid shaft

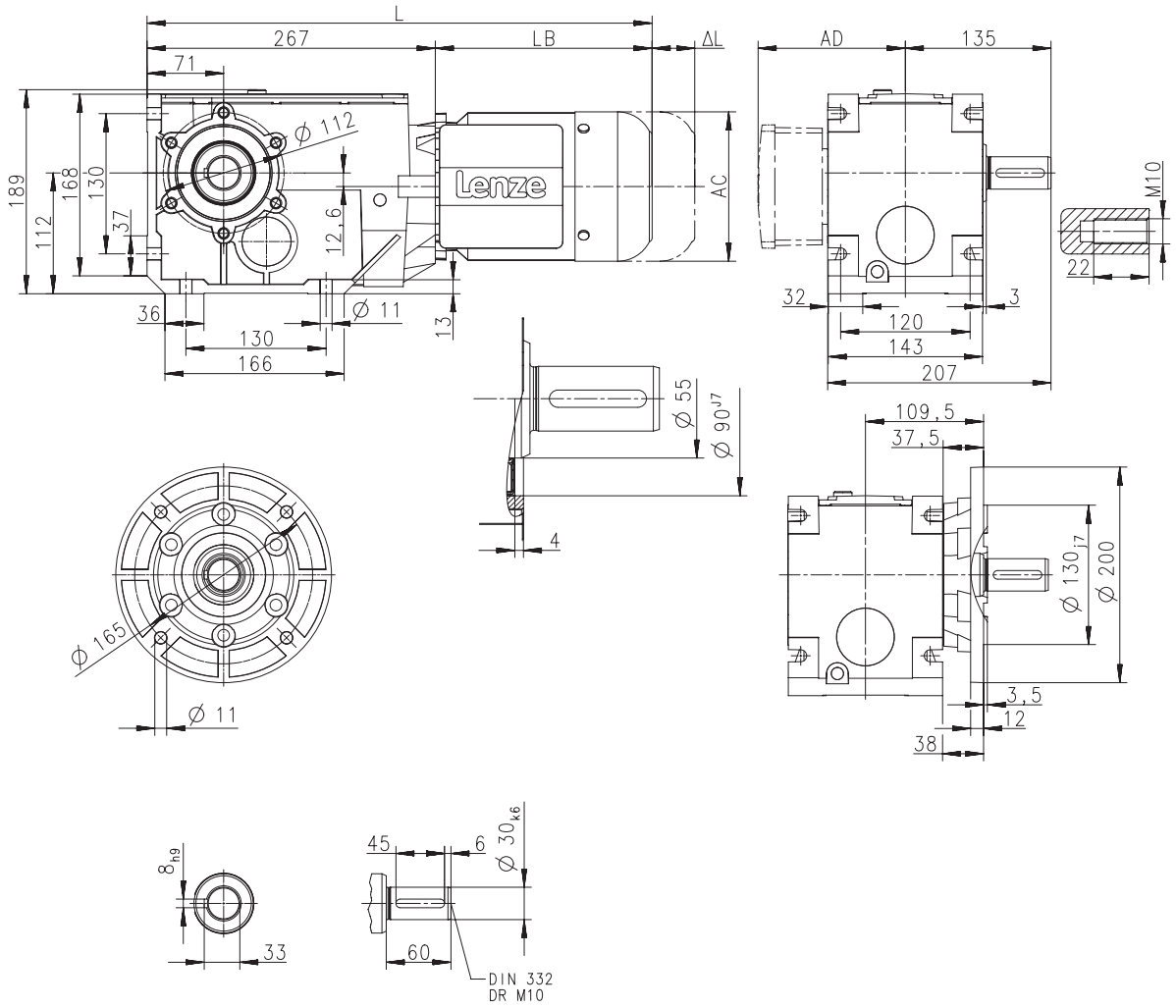

Product			MD□MA□□					MH□MA□□					
			063-12	063-32	063-42	071-32	071-42	080-32	090-12	090-32	100-12	100-32	112-22
Dimensions													
Total length	**L**	**[mm]**	450			470		493	552		588	604	647
Motor length	**LB**	**[mm]**	183			203		226	285		321	337	380
Length of motor options	**Δ L**	**[mm]**	170			165		183	181		170		183
Motor diameter	**AC**	**[mm]**	123			139		156	176		194		218
Distance motor/connection	**AD**	**[mm]**	100			109		150	152	157	166		176



Dimensions, 4-pole motors

g500-B450

Dimensions with shrink disc

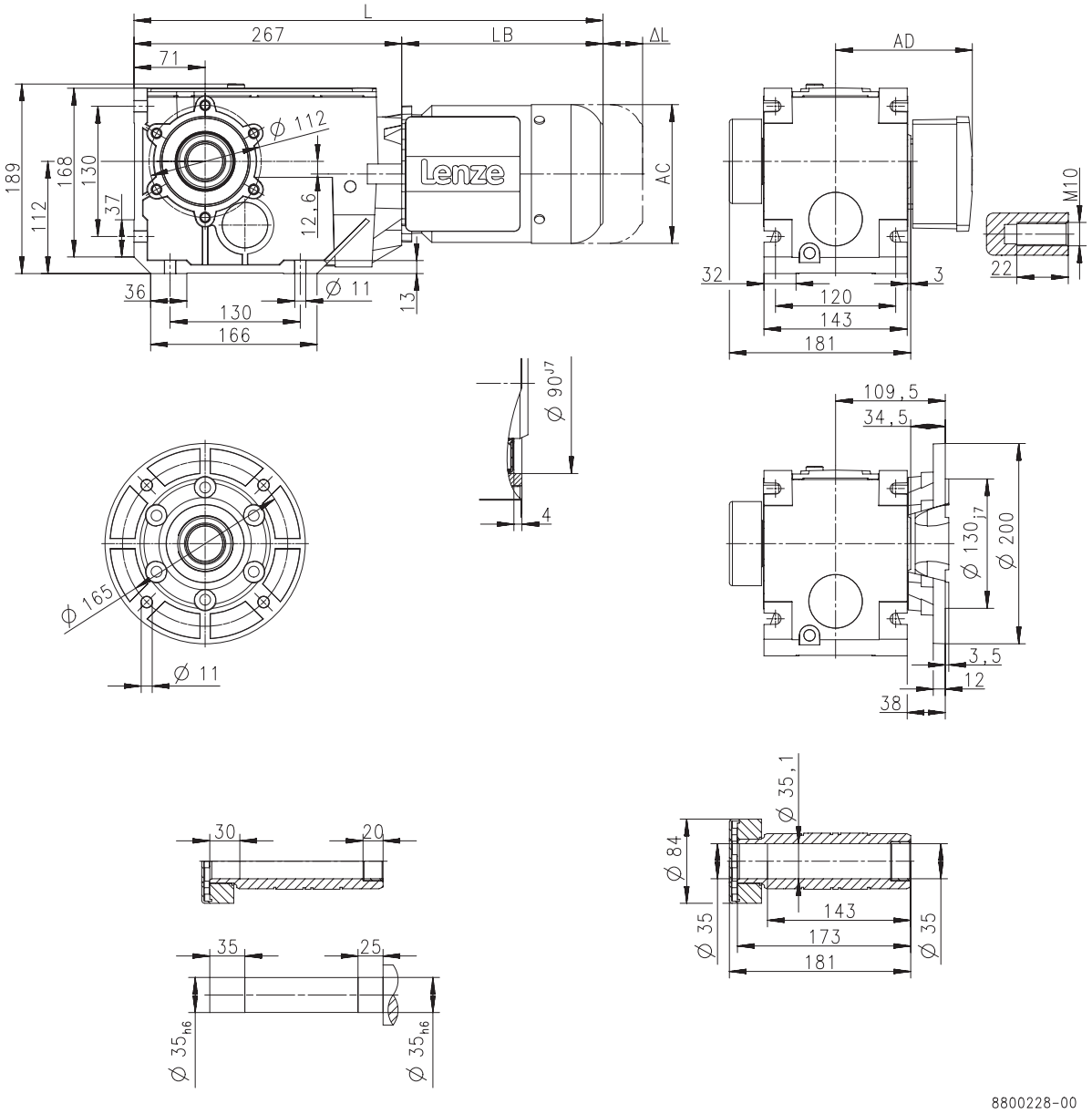

Product			MD□MA□□					MH□MA□□					
			063-12	063-32	063-42	071-32	071-42	080-32	090-12	090-32	100-12	100-32	112-22
Dimensions													
Total length	**L**	**[mm]**	450			470		493	552		588	604	647
Motor length	**LB**	**[mm]**	183			203		226	285		321	337	380
Length of motor options	**Δ L**	**[mm]**	170			165		183	181		170		183
Motor diameter	**AC**	**[mm]**	123			139		156	176		194		218
Distance motor/connection	**AD**	**[mm]**	100			109		150	152	157	166		176



Dimensions, 2-pole motors

g500-B110

Dimensions with hollow shaft

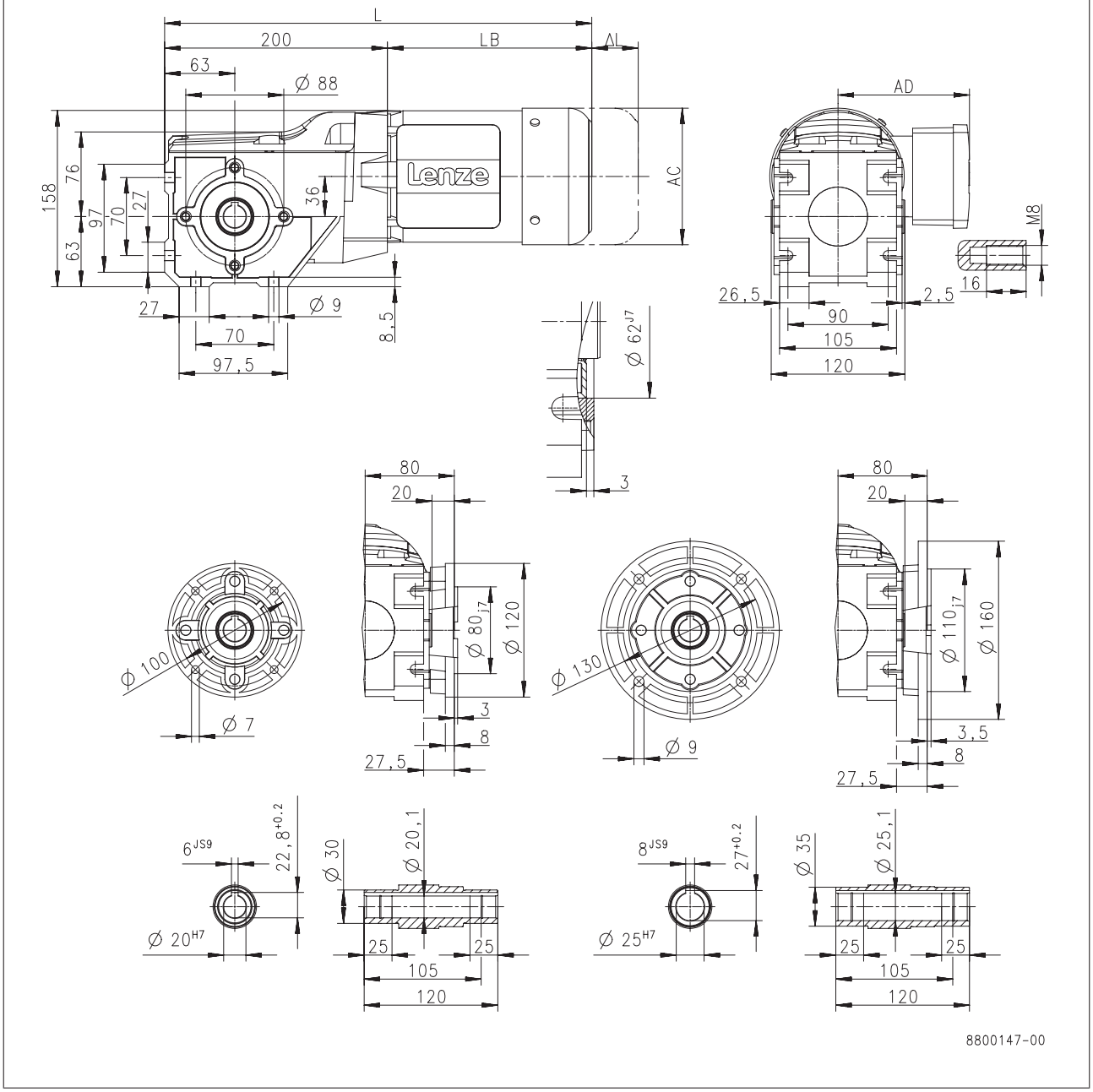

Product			MD□MA□□			
			063-11	063-31	071-11	071-31
Dimensions						
Total length	**L**	**[mm]**	383		403	
Motor length	**LB**	**[mm]**	183		203	
Length of motor options	**Δ L**	**[mm]**	170		165	
Motor diameter	**AC**	**[mm]**	123		139	
Distance motor/connection	**AD**	**[mm]**	100		109	



Dimensions, 2-pole motors

g500-B110

Dimensions with solid shaft

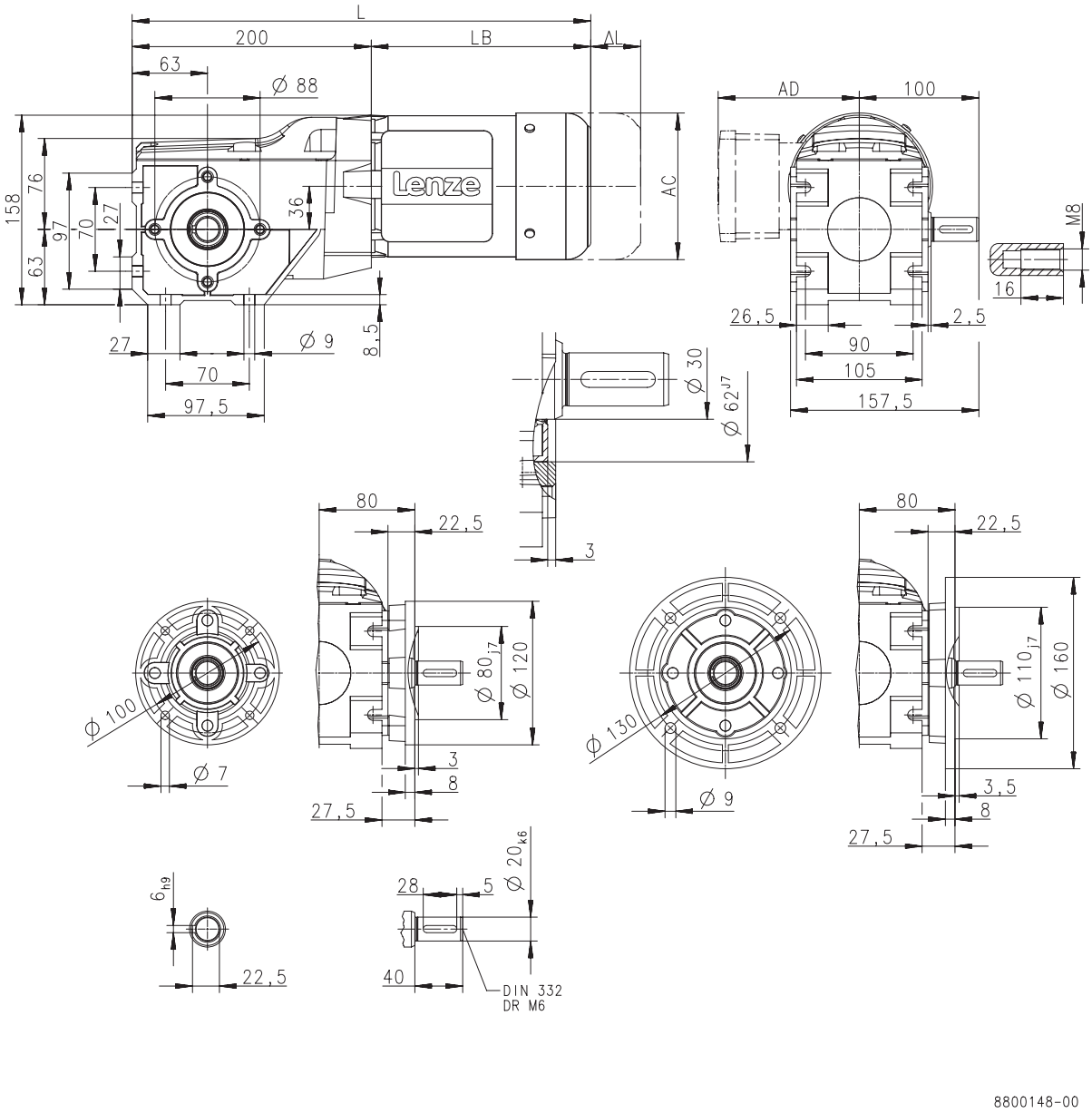

Product			MD□MA□□			
			063-11	063-31	071-11	071-31
Dimensions						
Total length	**L**	**[mm]**	383		403	
Motor length	**LB**	**[mm]**	183		203	
Length of motor options	**Δ L**	**[mm]**	170		165	
Motor diameter	**AC**	**[mm]**	123		139	
Distance motor/connection	**AD**	**[mm]**	100		109	



Dimensions, 2-pole motors

g500-B110

Dimensions with shrink disc

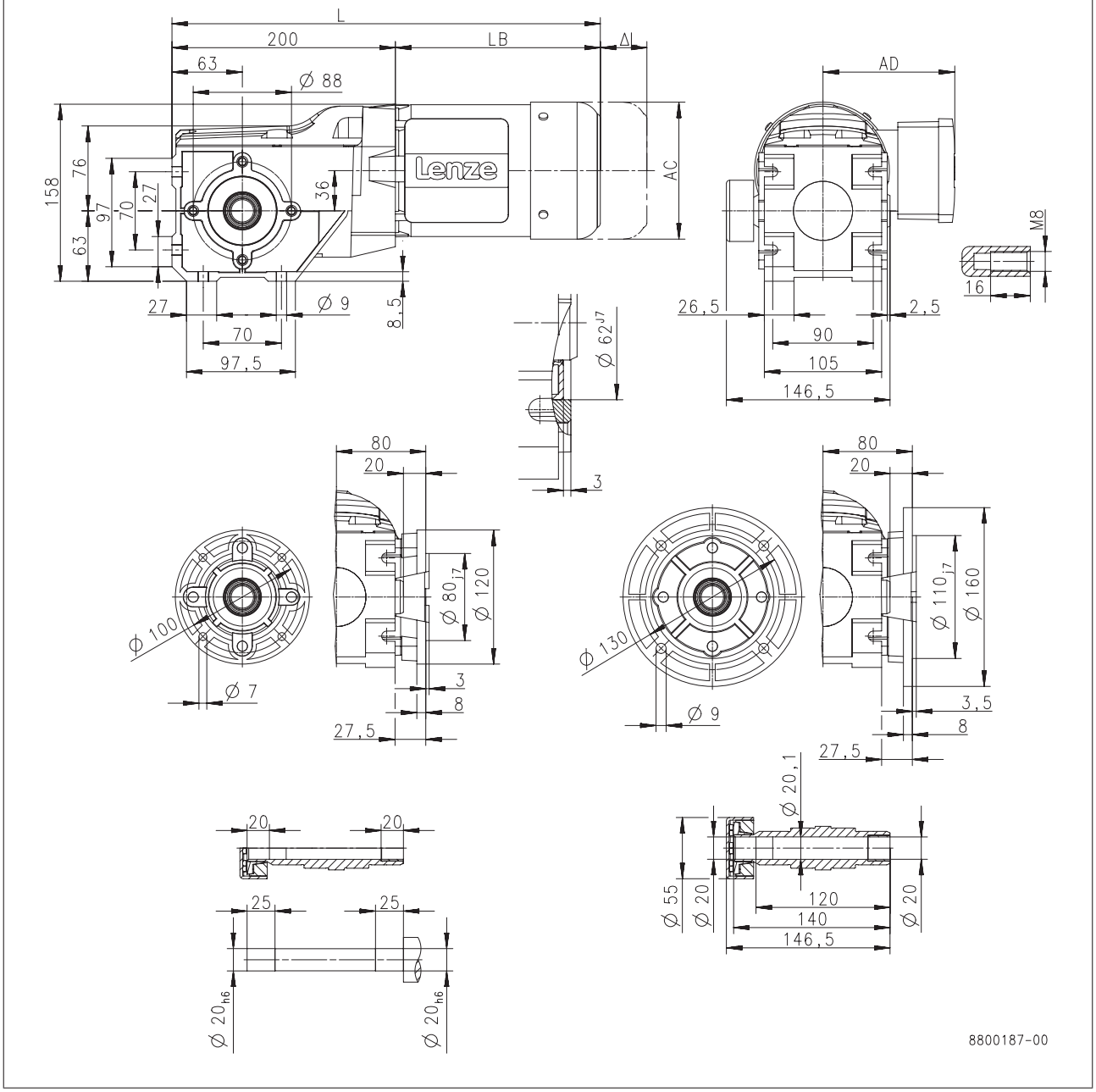

Product			MD□MA□□			
			063-11	063-31	071-11	071-31
Dimensions						
Total length	**L**	**[mm]**	383		403	
Motor length	**LB**	**[mm]**	183		203	
Length of motor options	**Δ L**	**[mm]**	170		165	
Motor diameter	**AC**	**[mm]**	123		139	
Distance motor/connection	**AD**	**[mm]**	100		109	



Dimensions, 2-pole motors

g500-B240

Dimensions with hollow shaft

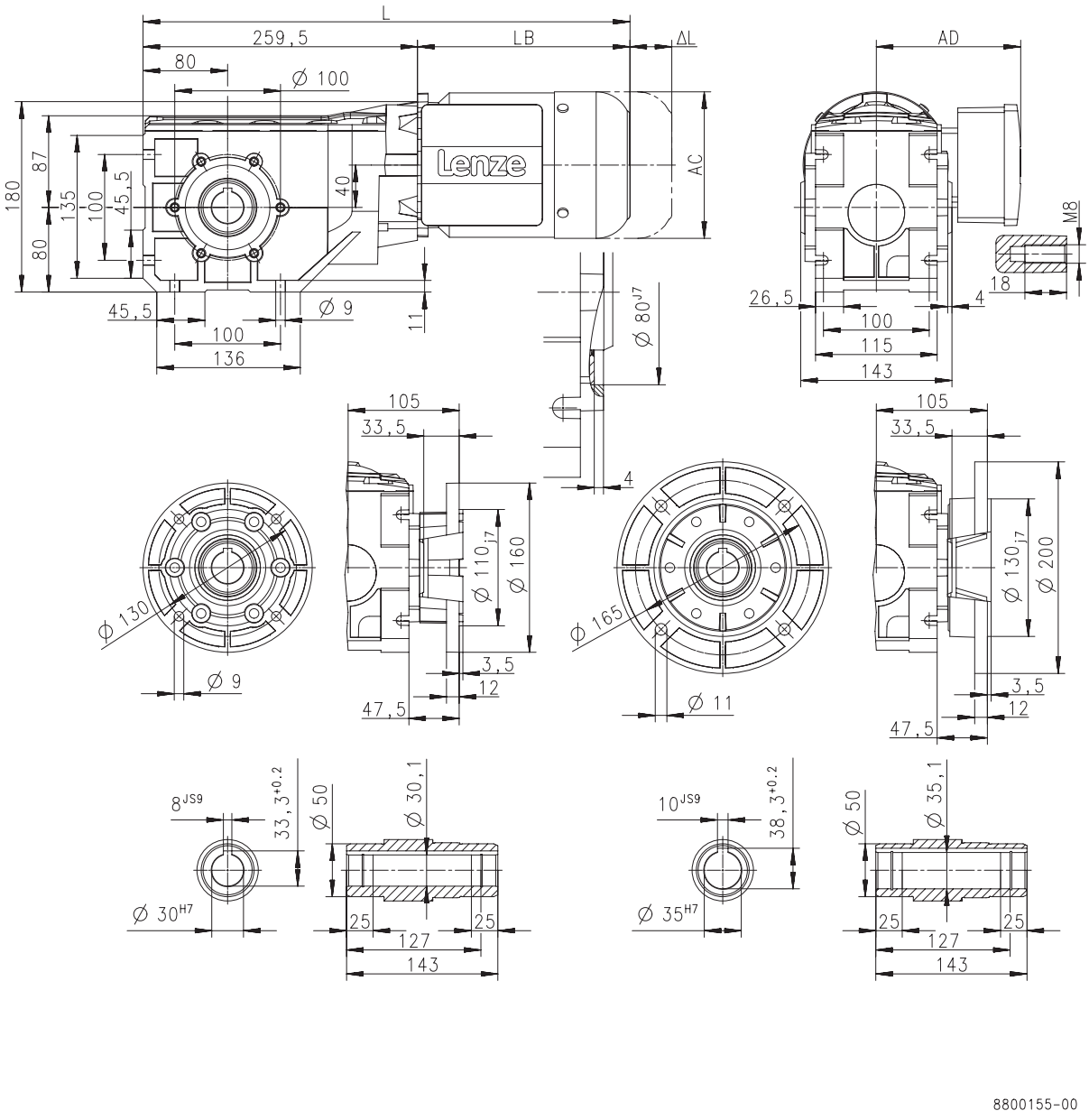

Product			MD□MA□□			
			063-11	063-31	071-11	071-31
Dimensions						
Total length	**L**	**[mm]**	443		463	
Motor length	**LB**	**[mm]**	183		203	
Length of motor options	**Δ L**	**[mm]**	170		165	
Motor diameter	**AC**	**[mm]**	123		139	
Distance motor/connection	**AD**	**[mm]**	100		109	



Dimensions, 2-pole motors

g500-B240

Dimensions with solid shaft

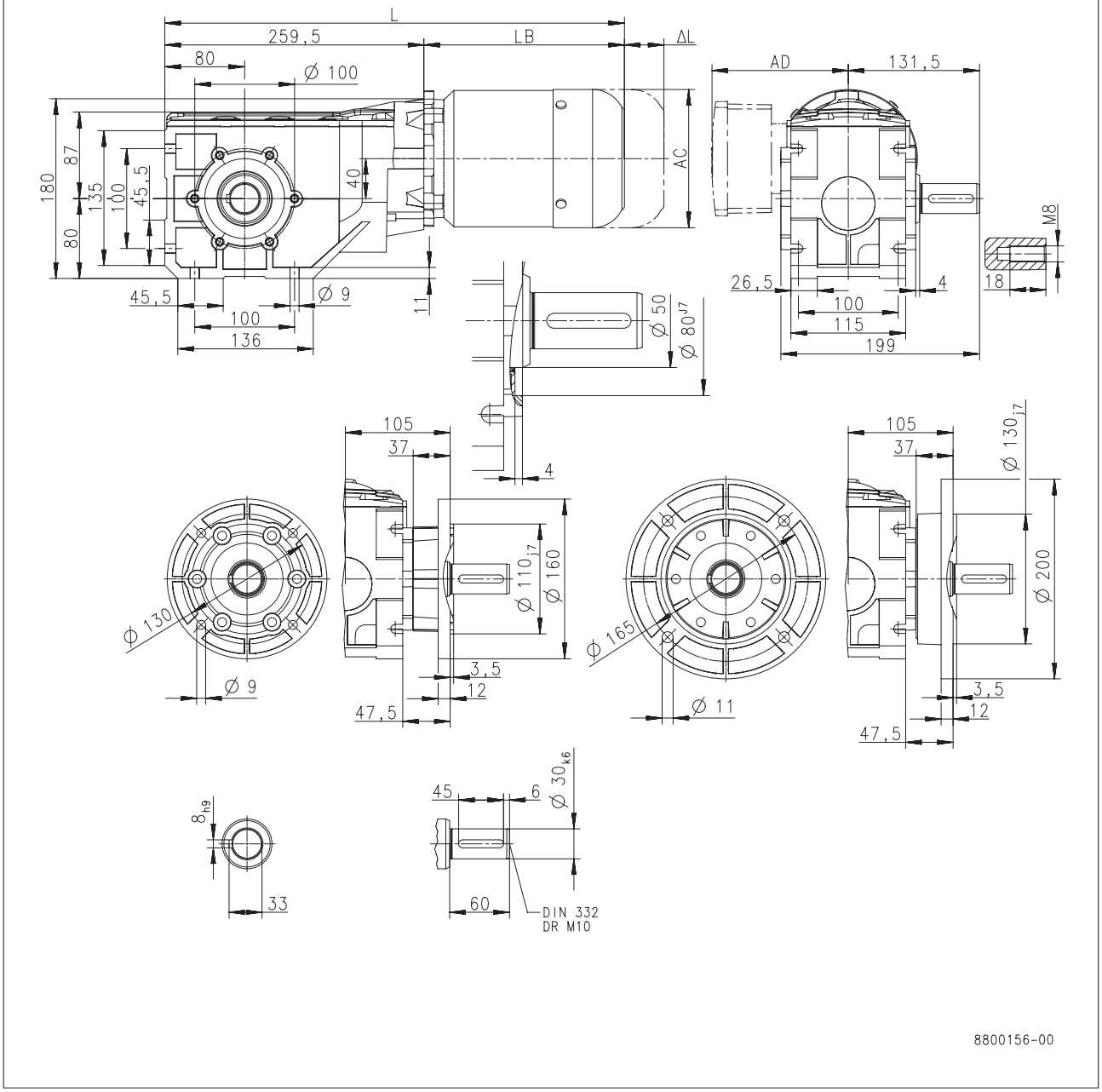

Product			MD□MA□□			
			063-11	063-31	071-11	071-31
Dimensions						
Total length	**L**	**[mm]**	443		463	
Motor length	**LB**	**[mm]**	183		203	
Length of motor options	**Δ L**	**[mm]**	170		165	
Motor diameter	**AC**	**[mm]**	123		139	
Distance motor/connection	**AD**	**[mm]**	100		109	



Dimensions, 2-pole motors

g500-B240

Dimensions with shrink disc

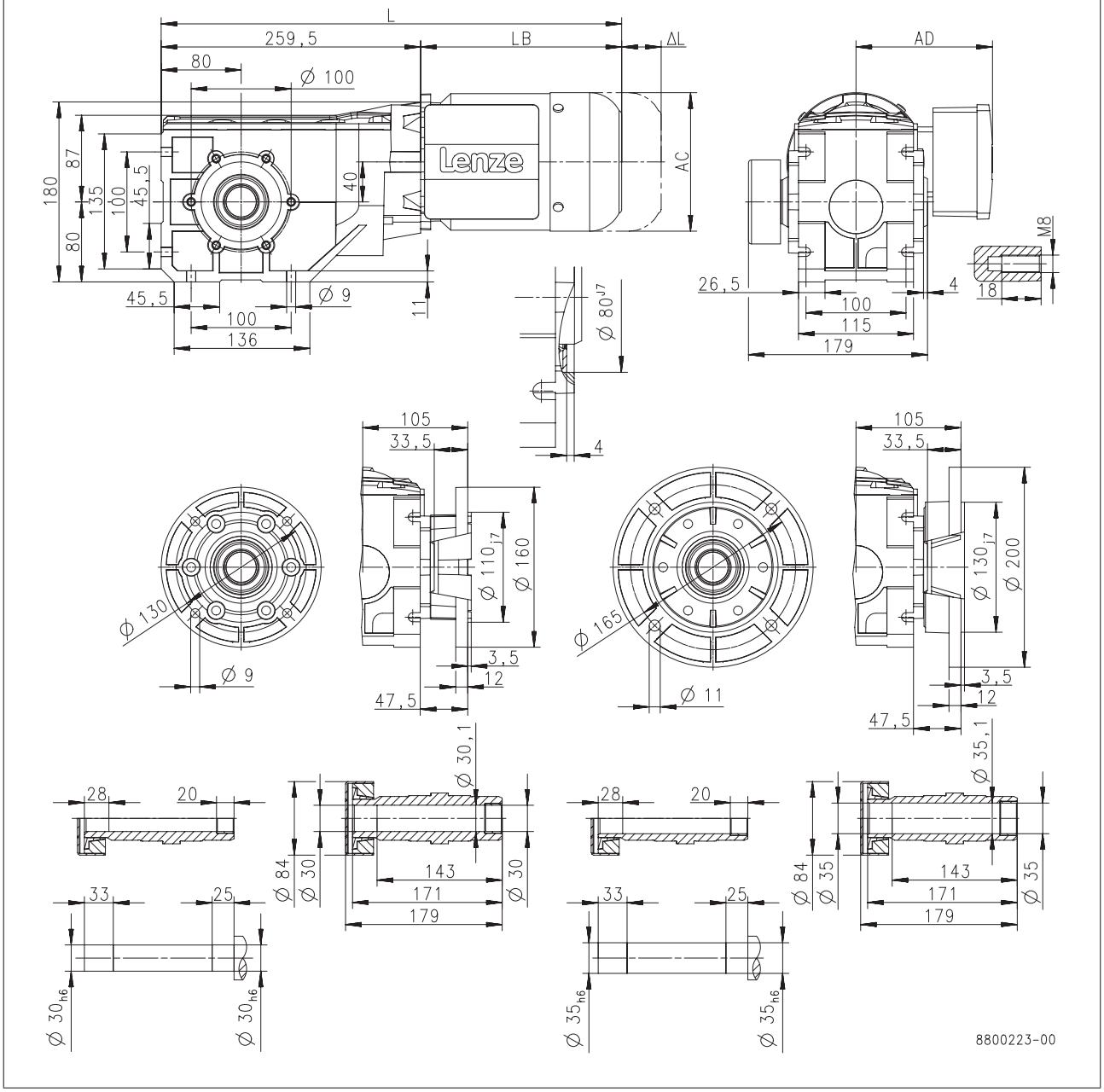

Product			MD□MA□□			
			063-11	063-31	071-11	071-31
Dimensions						
Total length	**L**	**[mm]**	443		463	
Motor length	**LB**	**[mm]**	183		203	
Length of motor options	**Δ L**	**[mm]**	170		165	
Motor diameter	**AC**	**[mm]**	123		139	
Distance motor/connection	**AD**	**[mm]**	100		109	



Dimensions, 2-pole motors

g500-B450

Dimensions with hollow shaft

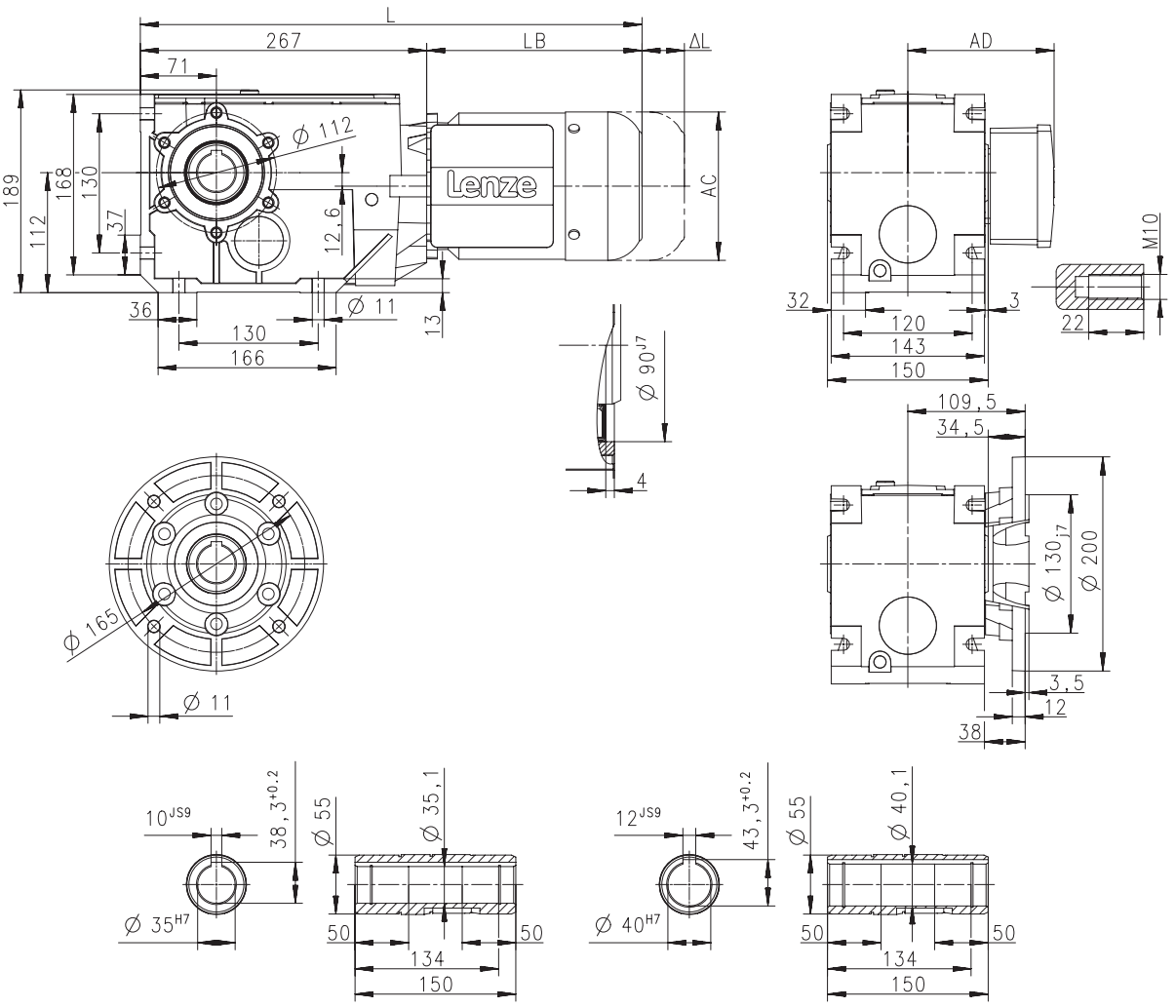

Product			MD□MA□□			
			063-11	063-31	071-11	071-31
Dimensions						
Total length	**L**	**[mm]**	450		470	
Motor length	**LB**	**[mm]**	183		203	
Length of motor options	**Δ L**	**[mm]**	170		165	
Motor diameter	**AC**	**[mm]**	123		139	
Distance motor/connection	**AD**	**[mm]**	100		109	



Dimensions, 2-pole motors

g500-B450

Dimensions with solid shaft

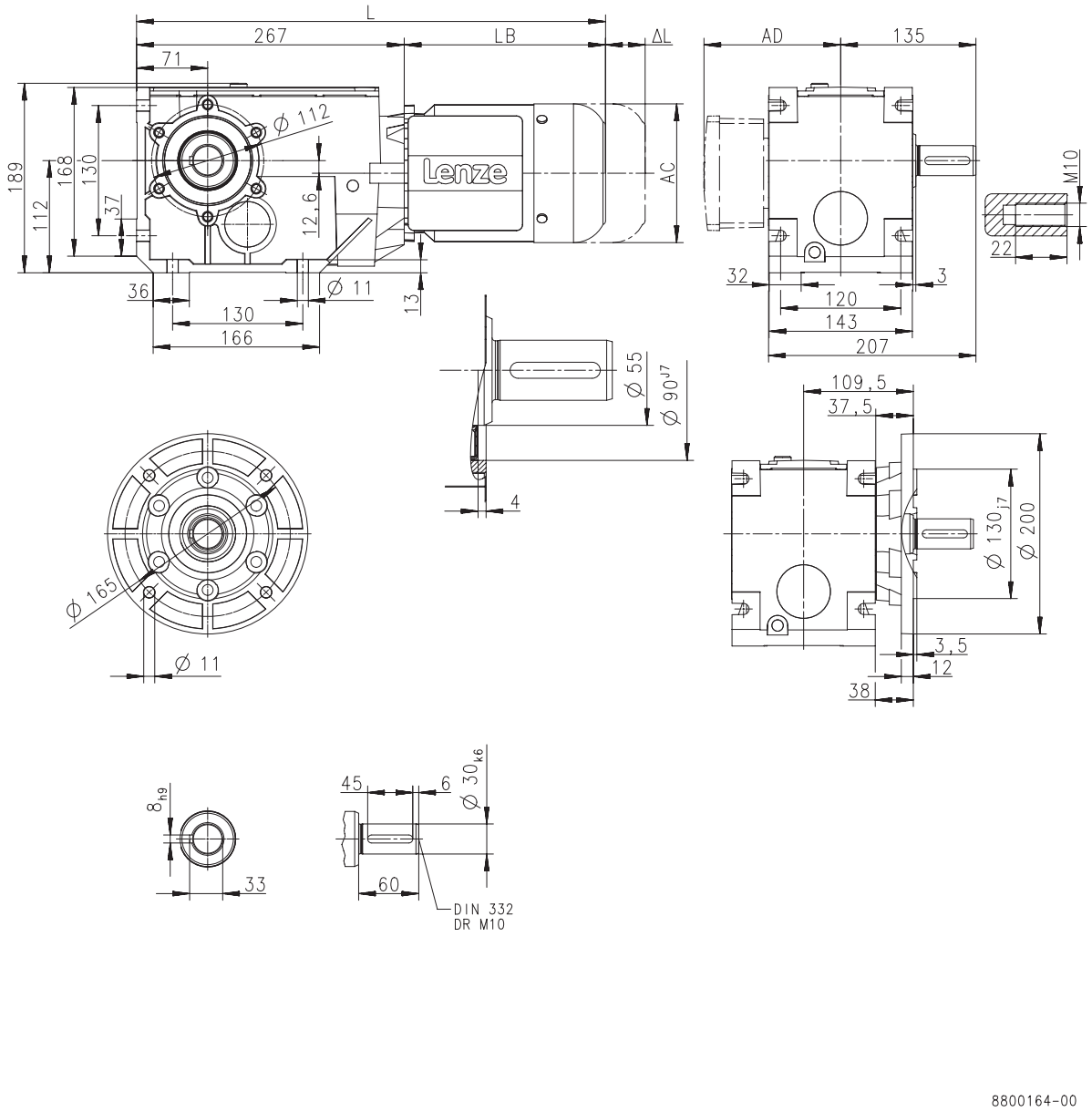

Product			MD□MA□□			
			063-11	063-31	071-11	071-31
Dimensions						
Total length	**L**	**[mm]**	450		470	
Motor length	**LB**	**[mm]**	183		203	
Length of motor options	**Δ L**	**[mm]**	170		165	
Motor diameter	**AC**	**[mm]**	123		139	
Distance motor/connection	**AD**	**[mm]**	100		109	



Dimensions, 2-pole motors

g500-B450

Dimensions with shrink disc

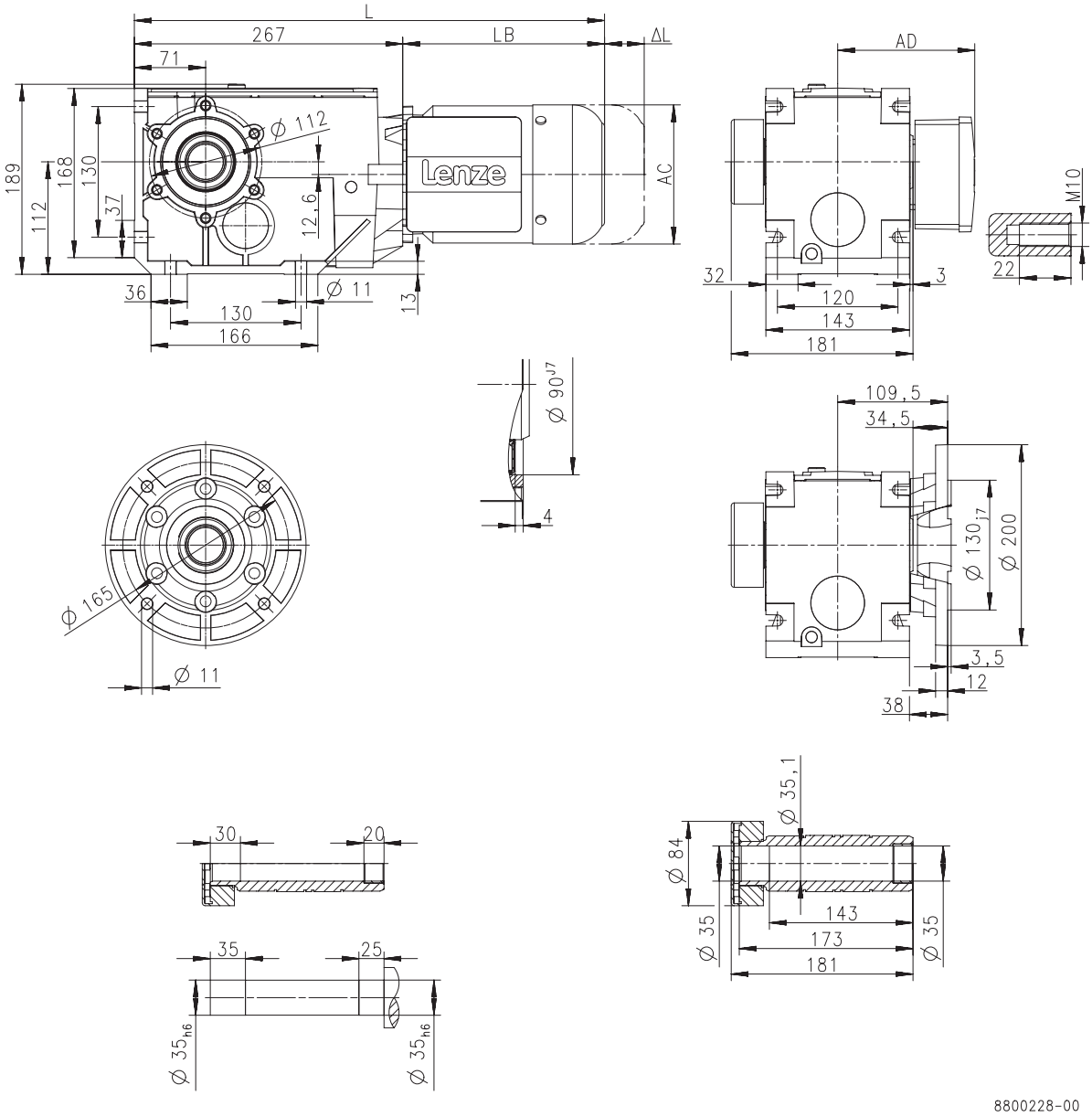

Product			MD□MA□□			
			063-11	063-31	071-11	071-31
Dimensions						
Total length	**L**	**[mm]**	450		470	
Motor length	**LB**	**[mm]**	183		203	
Length of motor options	**Δ L**	**[mm]**	170		165	
Motor diameter	**AC**	**[mm]**	123		139	
Distance motor/connection	**AD**	**[mm]**	100		109	



Dimensions, 6-pole motors

g500-B110

Dimensions with hollow shaft

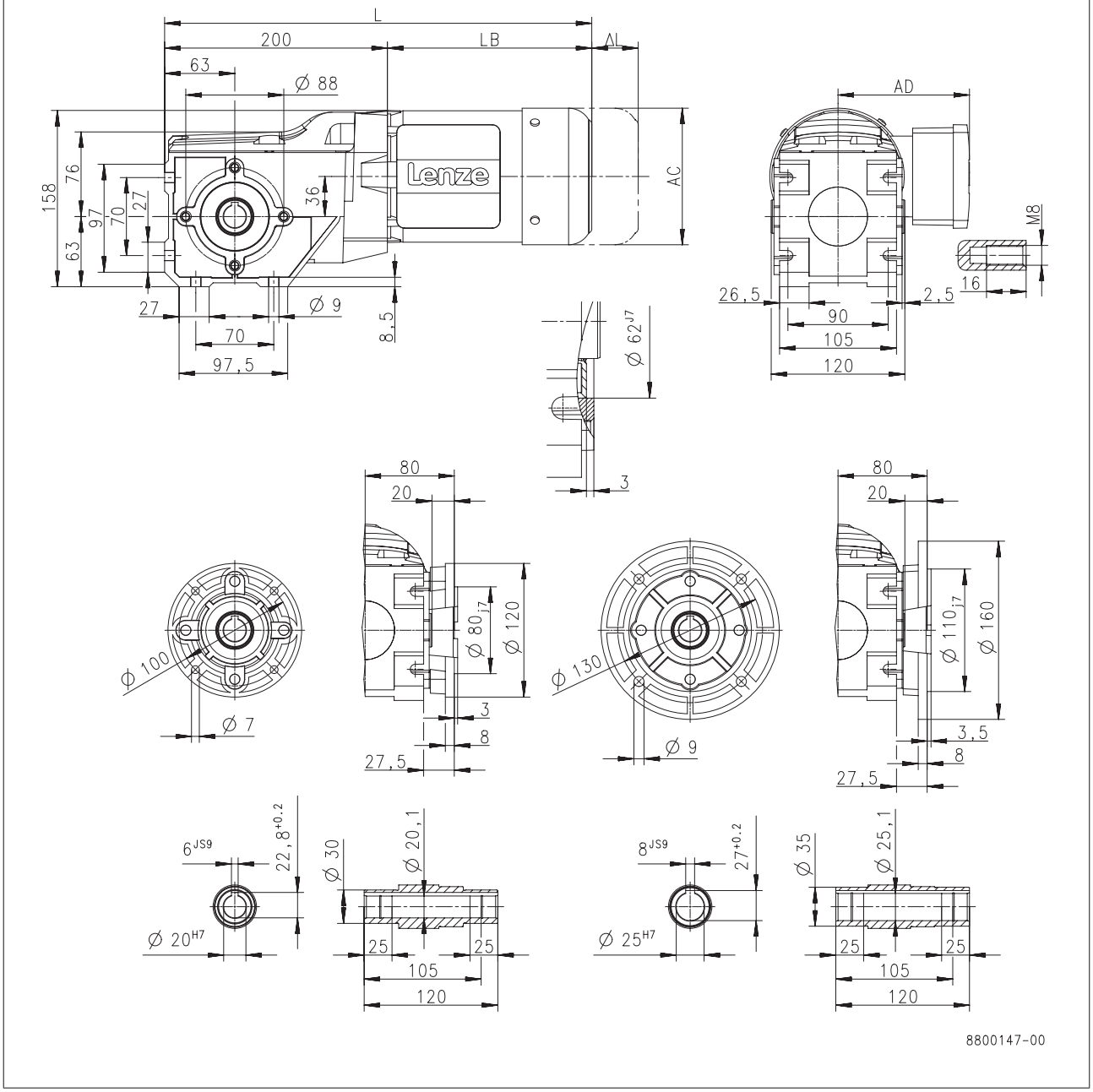

Product			MD□MA□□			
			071-13	071-33	080-13	080-33
Dimensions						
Total length	**L**	**[mm]**	403		426	
Motor length	**LB**	**[mm]**	203		226	
Length of motor options	**Δ L**	**[mm]**	165		183	
Motor diameter	**AC**	**[mm]**	139		156	
Distance motor/connection	**AD**	**[mm]**	109		150	



Dimensions, 6-pole motors

g500-B110

Dimensions with solid shaft

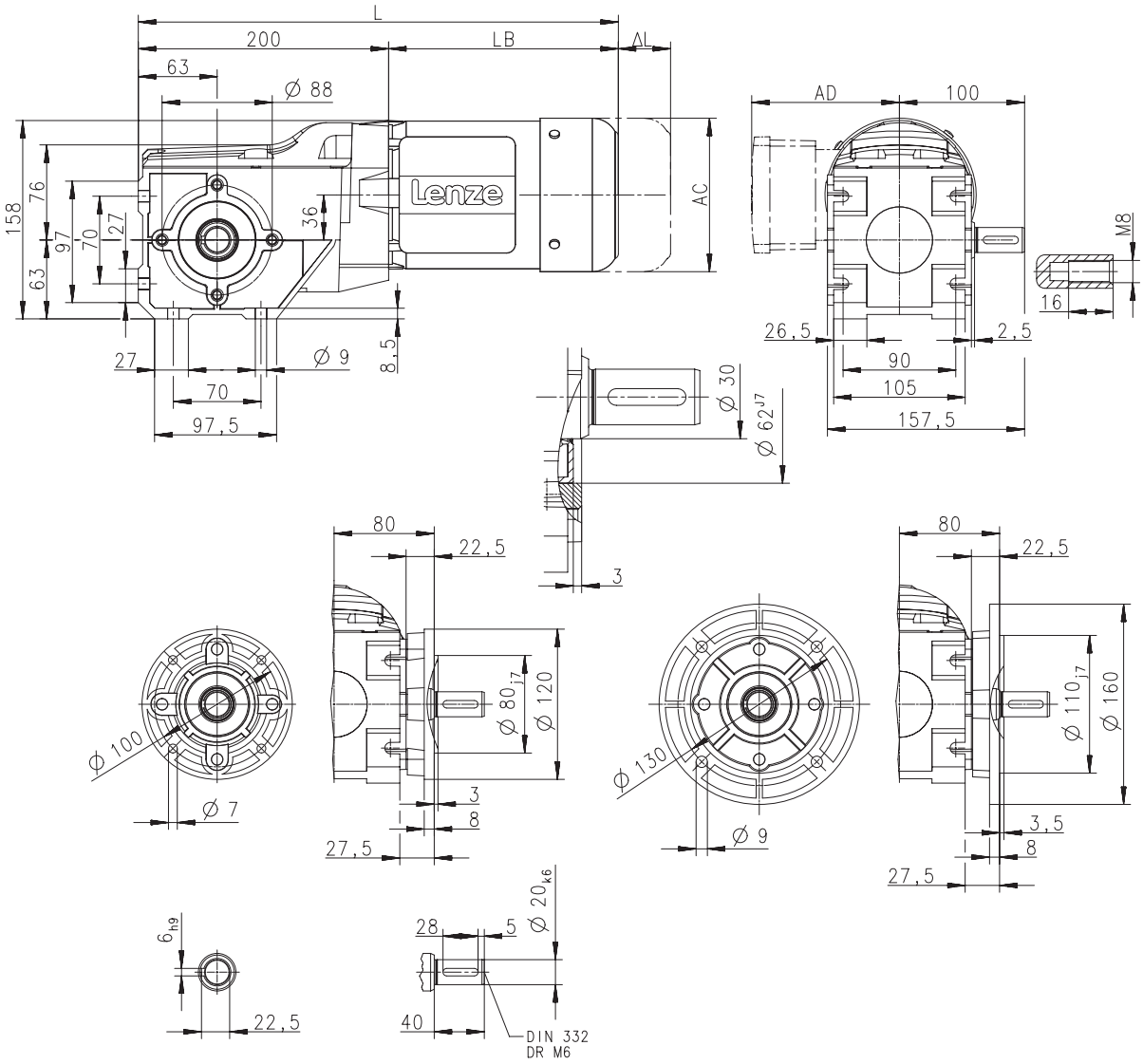

Product			MD□MA□□			
			071-13	071-33	080-13	080-33
Dimensions						
Total length	**L**	**[mm]**	403		426	
Motor length	**LB**	**[mm]**	203		226	
Length of motor options	**Δ L**	**[mm]**	165		183	
Motor diameter	**AC**	**[mm]**	139		156	
Distance motor/connection	**AD**	**[mm]**	109		150	



Dimensions, 6-pole motors

g500-B110

Dimensions with shrink disc

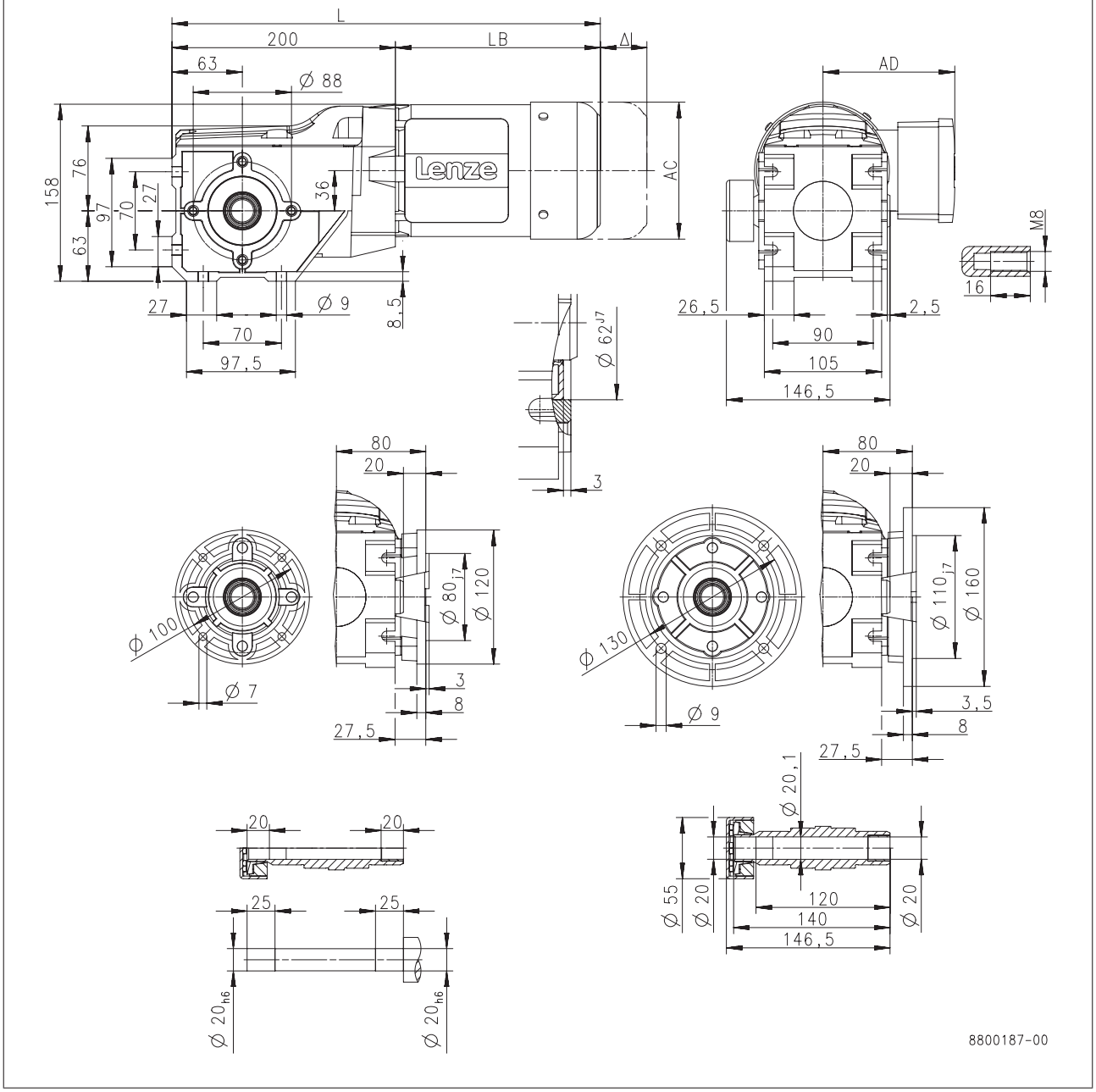

Product			MD□MA□□			
			071-13	071-33	080-13	080-33
Dimensions						
Total length	**L**	**[mm]**	403		426	
Motor length	**LB**	**[mm]**	203		226	
Length of motor options	**Δ L**	**[mm]**	165		183	
Motor diameter	**AC**	**[mm]**	139		156	
Distance motor/connection	**AD**	**[mm]**	109		150	

6.7



Dimensions, 6-pole motors

g500-B240

Dimensions with hollow shaft

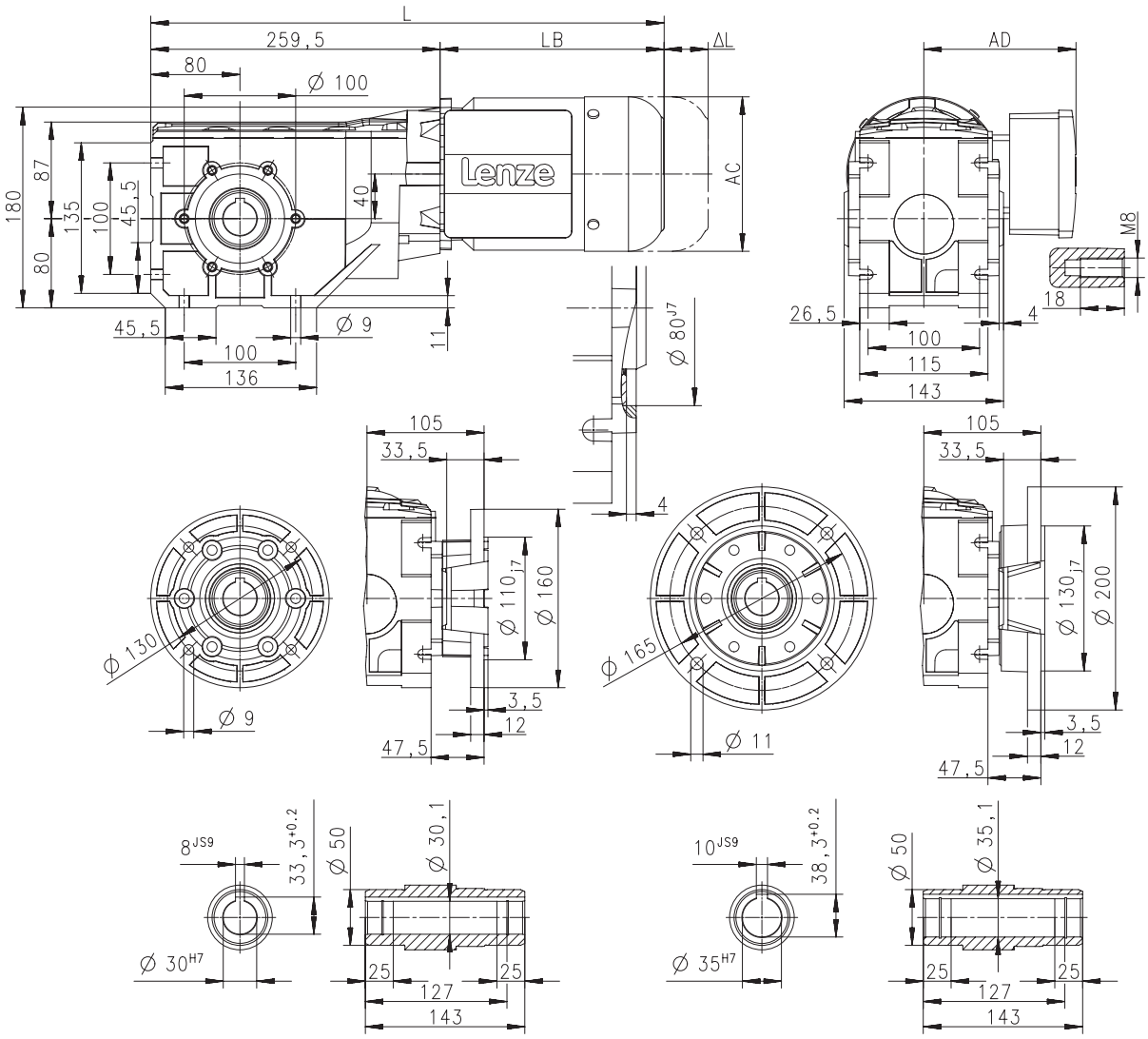

Product			MD□MA□□			
			071-13	071-33	080-13	080-33
Dimensions						
Total length	**L**	**[mm]**	463		486	
Motor length	**LB**	**[mm]**	203		226	
Length of motor options	**Δ L**	**[mm]**	165		183	
Motor diameter	**AC**	**[mm]**	139		156	
Distance motor/connection	**AD**	**[mm]**	109		150	



Dimensions, 6-pole motors

g500-B240

Dimensions with solid shaft

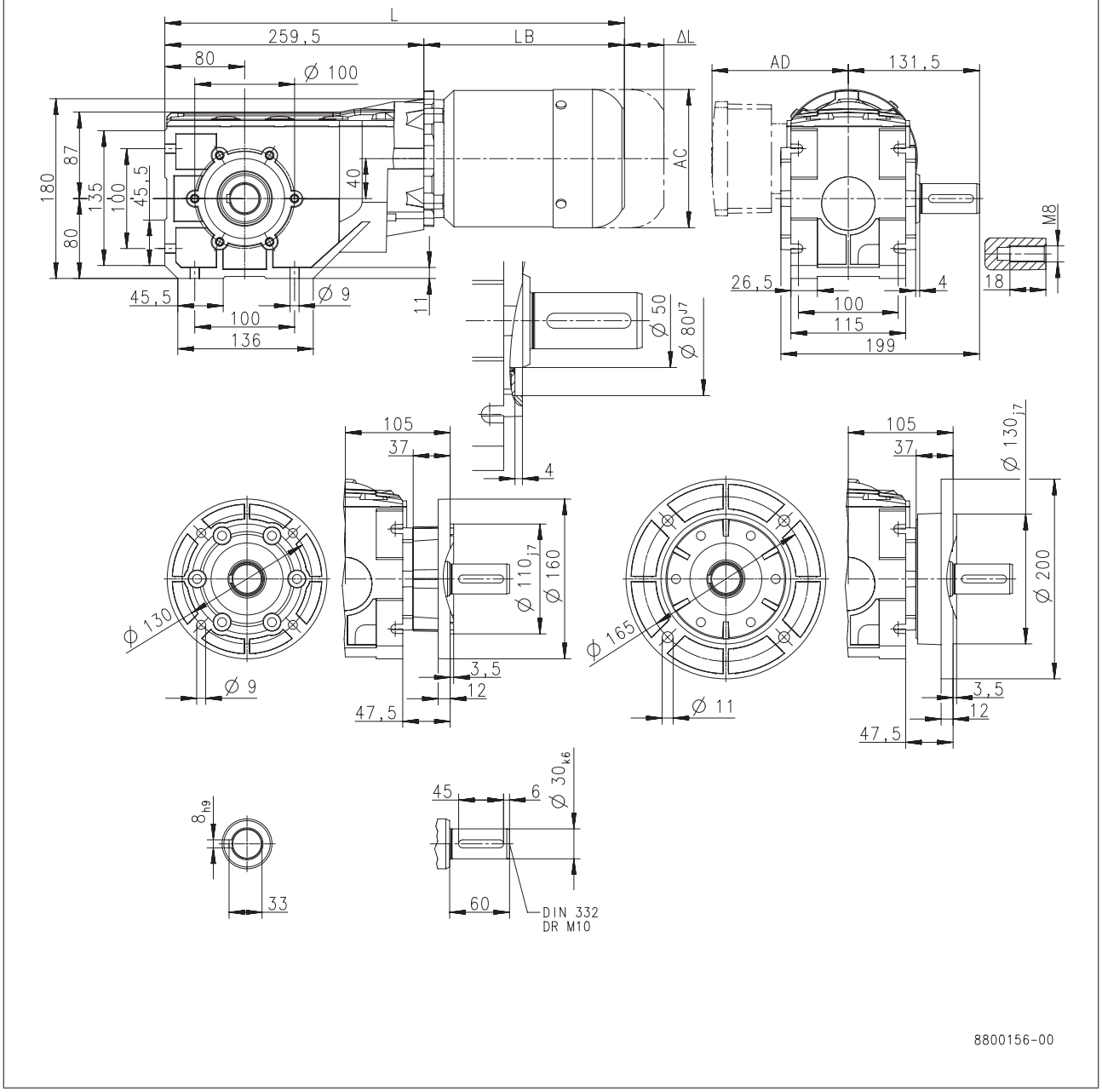

Product			MD□MA□□			
			071-13	071-33	080-13	080-33
Dimensions						
Total length	**L**	**[mm]**	463		486	
Motor length	**LB**	**[mm]**	203		226	
Length of motor options	**Δ L**	**[mm]**	165		183	
Motor diameter	**AC**	**[mm]**	139		156	
Distance motor/connection	**AD**	**[mm]**	109		150	



Dimensions, 6-pole motors

g500-B240

Dimensions with shrink disc

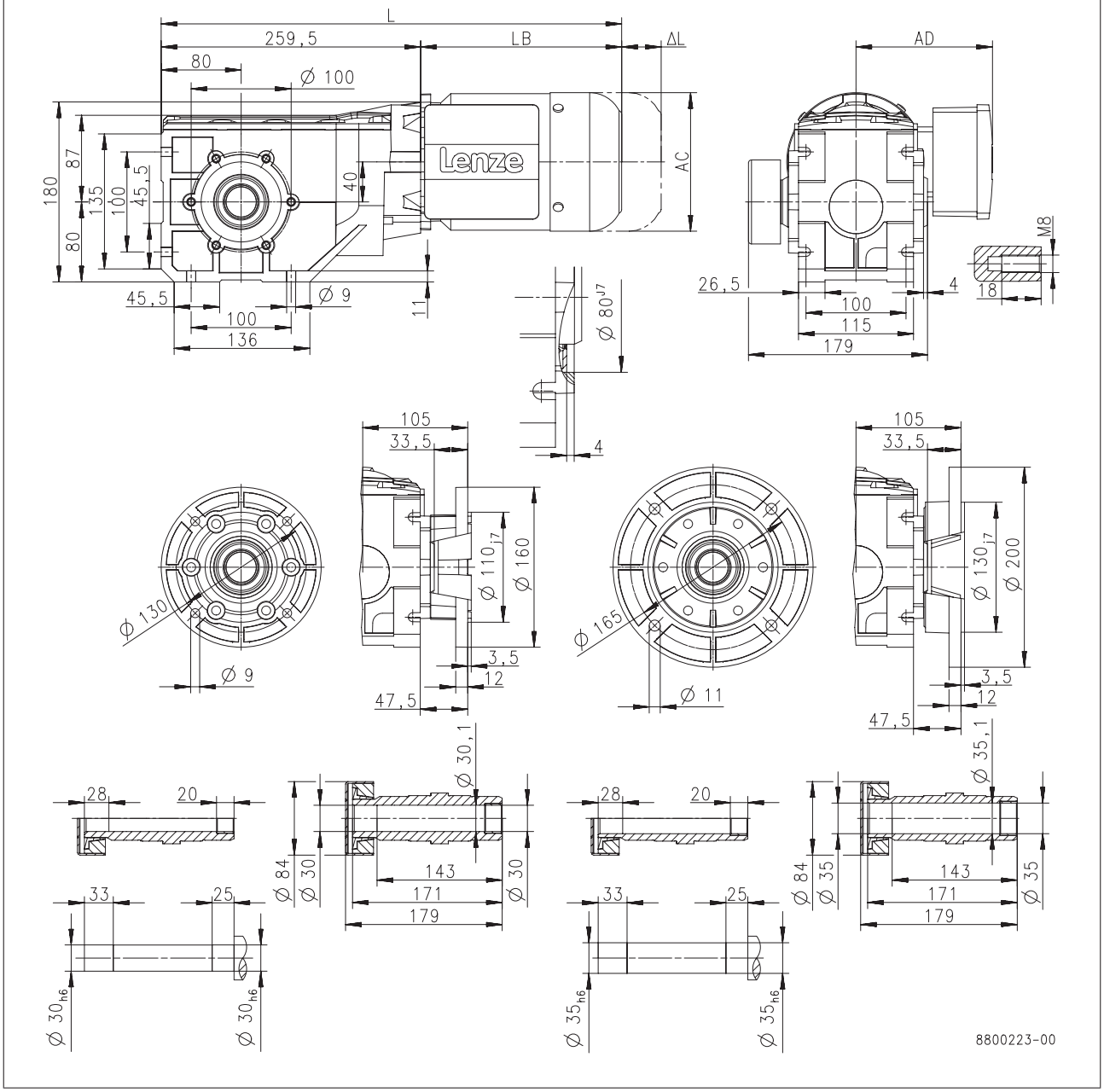

Product			MD□MA□□			
			071-13	071-33	080-13	080-33
Dimensions						
Total length	**L**	**[mm]**	463		486	
Motor length	**LB**	**[mm]**	203		226	
Length of motor options	**Δ L**	**[mm]**	165		183	
Motor diameter	**AC**	**[mm]**	139		156	
Distance motor/connection	**AD**	**[mm]**	109		150	



Dimensions, 6-pole motors

g500-B450

Dimensions with hollow shaft

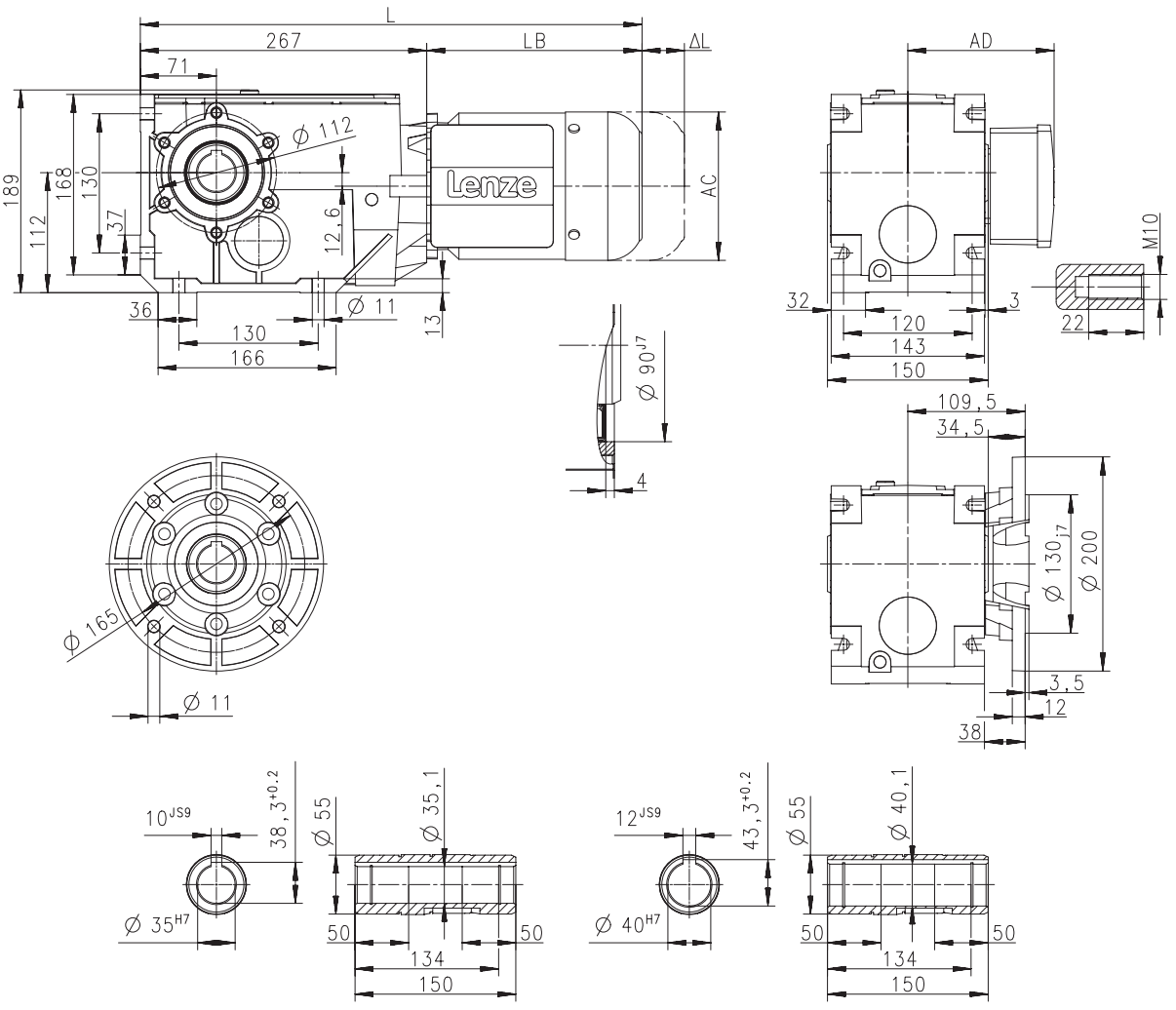

Product			MD□MA□□			
			071-13	071-33	080-13	080-33
Dimensions						
Total length	**L**	**[mm]**	470		493	
Motor length	**LB**	**[mm]**	203		226	
Length of motor options	**Δ L**	**[mm]**	165		183	
Motor diameter	**AC**	**[mm]**	139		156	
Distance motor/connection	**AD**	**[mm]**	109		150	



Dimensions, 6-pole motors

g500-B450

Dimensions with solid shaft

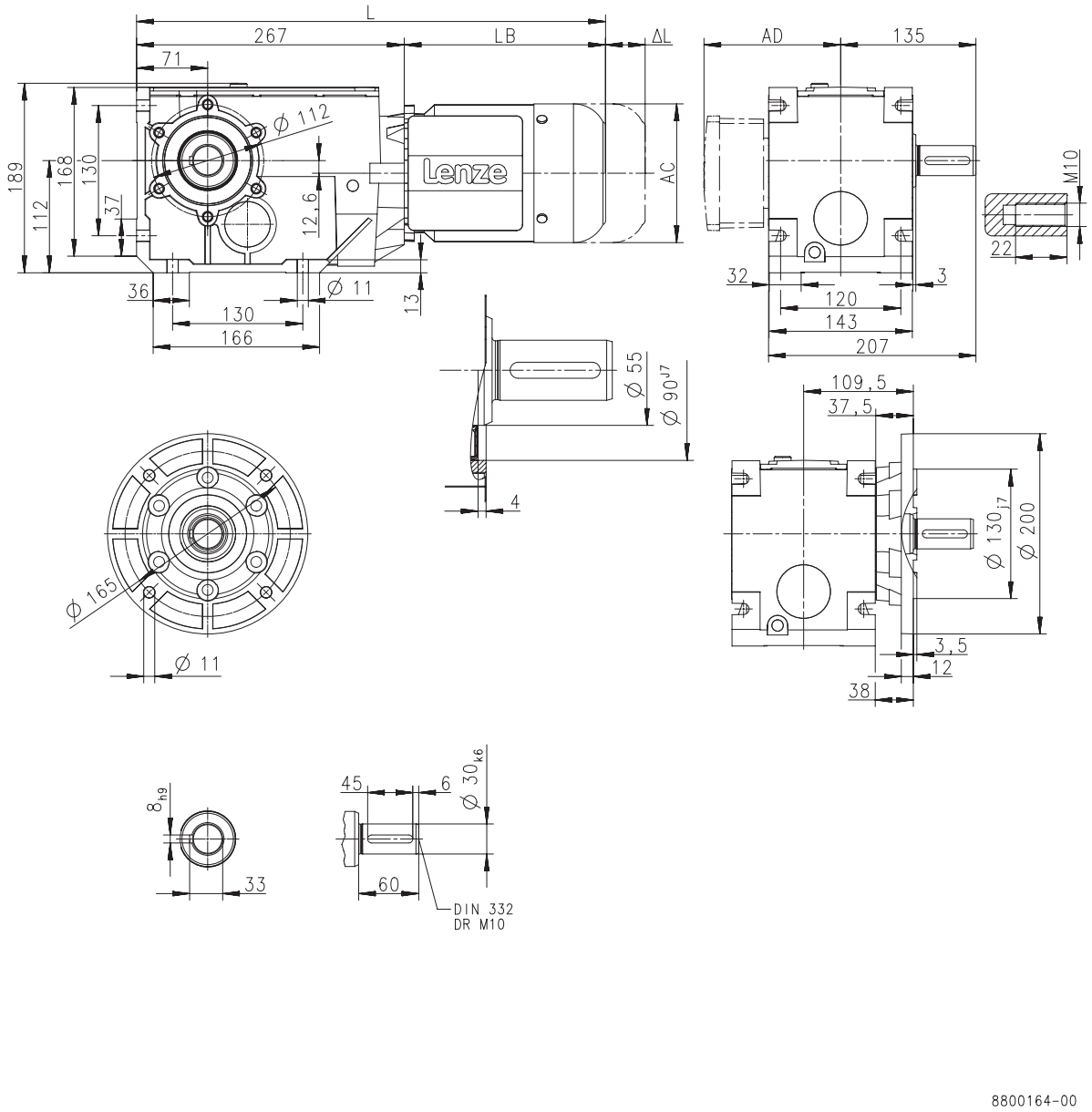

Product			MD□MA□□			
			071-13	071-33	080-13	080-33
Dimensions						
Total length	**L**	**[mm]**	470		493	
Motor length	**LB**	**[mm]**	203		226	
Length of motor options	**Δ L**	**[mm]**	165		183	
Motor diameter	**AC**	**[mm]**	139		156	
Distance motor/connection	**AD**	**[mm]**	109		150	



Dimensions, 6-pole motors

g500-B450

Dimensions with shrink disc

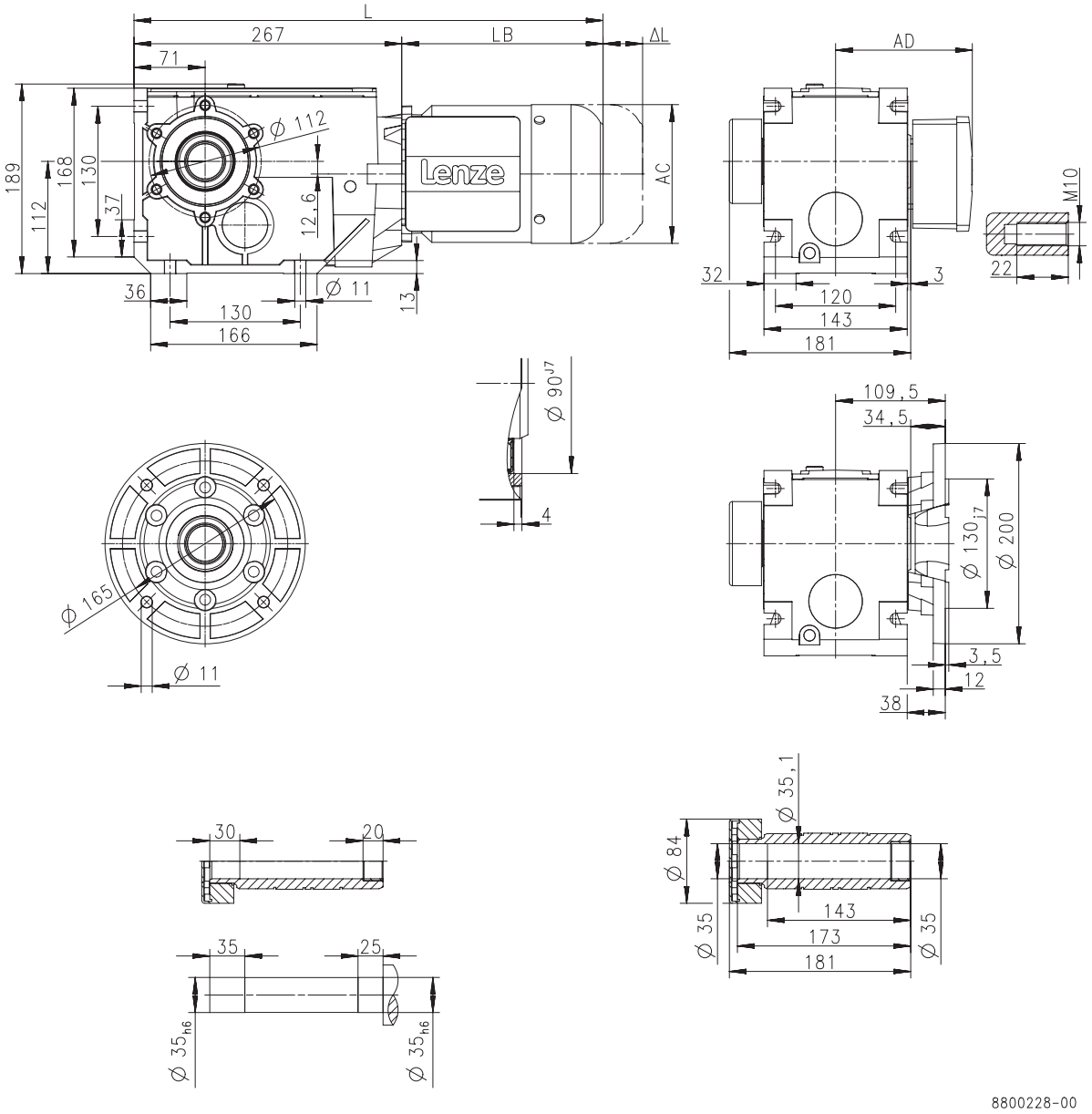

Product			MD□MA□□			
			071-13	071-33	080-13	080-33
Dimensions						
Total length	**L**	**[mm]**	470		493	
Motor length	**LB**	**[mm]**	203		226	
Length of motor options	**Δ L**	**[mm]**	165		183	
Motor diameter	**AC**	**[mm]**	139		156	
Distance motor/connection	**AD**	**[mm]**	109		150	



Weights, 4-pole motors

2-stage gearboxes

				MD□MA□□							MH□MA□□				
				063-02	063-12	063-22	063-32	063-42	071-32	071-42	080-32	090-12	090-32	100-12	100-32
g500	-B45	m	[kg]	6.7	7.0	6.7	7.0	7.3	8.7	9.3					
	-B110	m	[kg]		8.6		8.6	8.9	10	11	15	20	22		
	-B240	m	[kg]		12		12	13	14	15	19	24	26	32	35

3-stage gearboxes

				MD□MA□□			MH□MA□□					
				063-12 063-32 063-42	071-32	071-42	080-32	090-12	090-32	100-12	100-32	112-22
g500	-B240	m	[kg]	13	14	15						
	-B450	m	[kg]	16	17	18	22	27	29	35	38	49

Weights, 2-pole motors

2-stage gearboxes

				MD□MA□□			
				063-11	063-31	071-11	071-31
g500	-B110	m	[kg]	8.4	8.3	10	11
	-B240	m	[kg]		12	14	15

3-stage gearboxes

				MD□MA□□		
				063-11 063-31	071-11	071-31
g500	-B240	m	[kg]	12	14	15
	-B450	m	[kg]	15	18	

Weights, 6-pole motors

2-stage gearboxes

				MD□MA□□	
				071-13 071-33	080-13 080-33
g500	-B110	m	[kg]	11	15
	-B240	m	[kg]	15	19

3-stage gearboxes

				MD□MA□□		
				071-13 071-33	080-13	080-33
g500	-B240	m	[kg]	15	19	
	-B450	m	[kg]	18	22	



Surface and corrosion protection

For optimum protection of geared motors against ambient conditions, the surface and corrosion protection system (OKS) offers tailor-made solutions.

Various surface coatings combined with other protective measures ensure that the geared motors operate reliably even at high air humidity, in outdoor installations or in the presence of atmospheric impurities. Any colour from the RAL Classic collection can be chosen for the top coat. The geared motors are also available unpainted (no surface and corrosion protection).

Surface and corrosion protection	Applications	Measures
OKS-G (primed)	• Dependent on subsequent top coat applied	• 2K PUR priming coat (grey) • Zinc-coated screws • Rust-free breather elements Optional measures • Stainless steel nameplate
OKS-S (small)	• Standard applications • Internal installation in heated buildings • Air humidity up to 90%	• Surface coating as per corrosivity category C1 (in line with EN 12944-2) • Zinc-coated screws • Rust-free breather elements Optional measures • Stainless steel nameplate
OKS-M (medium)	• Internal installation in non-heated buildings • Covered, protected external installation • Air humidity up to 95%	• Surface coating as per corrosivity category C2 (in line with EN 12944-2) • Zinc-coated screws • Rust-free breather elements Optional measures • Stainless steel shaft • Stainless steel nameplate • Rust-free shrink disc (on request)
OKS-L (large)	• External installation • Air humidity above 95% • Chemical industry plants • Food industry	• Surface coating as per corrosivity category C3 (in line with EN 12944-2) • Blower cover and B end shield additionally primed • Cable glands with gaskets • Corrosion-resistant brake with cover ring, stainless friction plate, and chrome-plated armature plate (on request) • All screws/screw plugs zinc-coated • Stainless breather elements • Threaded holes that are not used are closed by means of plastic plugs Optional measures • Sealed recesses on motor (on request) • Stainless steel shaft • Stainless steel nameplate • Rust-free shrink disc (on request) • Additional priming coat on cast iron fan • Oil expansion tank and torque plates painted separately and supplied loose



Surface and corrosion protection

Structure of surface coating

Surface and corrosion protection	Corrosivity category	Surface coating	Colour
	DIN EN ISO 12944-2	Structure	
Without OKS(uncoated)		Dipping primed gearbox	
OKS-G (primed)		Dipping primed gearbox 2K PUR priming coat	
OKS-S (small)	C1	Dipping primed gearbox 2K-PUR top coat	Standard: RAL 7012 Optional: RAL Classic
OKS-M (medium)	C2	Dipping primed gearbox 2K PUR priming coat 2K-PUR top coat	
OKS-L (large)	C3		



g500-B bevel gearboxes

45 to 450 Nm

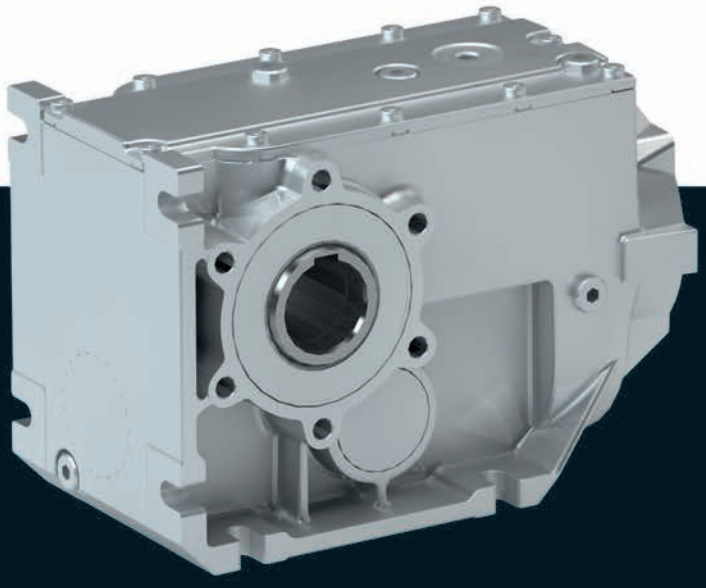

g500-B bevel gearbox

Contents

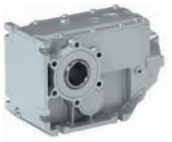

General information	List of abbreviations	6.7 - 5
	Product information	6.7 - 6
	Equipment	6.7 - 7
	The gearbox kit	6.7 - 8
	Functions and features	6.7 - 10
	Lubricants	6.7 - 11
	Ventilation	6.7 - 12
Technical data	Permissible radial and axial forces at output	6.7 - 15
	Moments of inertia	6.7 - 17
	Additional weights for gearboxes	6.7 - 19
Accessories	Torque plate	6.7 - 21
	Shaft cover	6.7 - 26

Contents

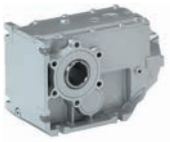

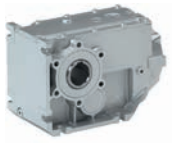

List of abbreviations

$F_{ax,max}$	[N]	Max. axial force
$F_{rad,max}$	[N]	Max. radial force
i		Ratio
J	[kgcm²]	Moment of inertia
m	[kg]	Mass

g500-B bevel gearbox

General information

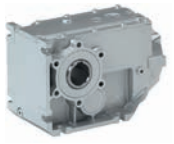

Product information

The efficient bevel gearboxes feature high reliable radial forces, closely stepped gear reductions and a low backlash. They are available in 2-pole and 3-pole design with a torque up to 450 Nm and a ratio of up to i= 360.

Versions

- High-efficient right-angle gearbox in a compact design for space-saving installation
- Standardised shaft and flange dimensions for an easy machine integration
- Low backlash and high torsional stiffness provide for exact results in positioning applications

The product name

Gearbox type	Product range		Design	Rated torque [Nm]	Product
Bevel gearbox	g500	-	B	45	g500-B45
				110	g500-B110
				240	g500-B240
				450	g500-B450

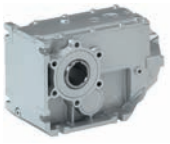

Equipment

Overview

The equipment includes all the options available as standard and all the built-on accessories of the product.

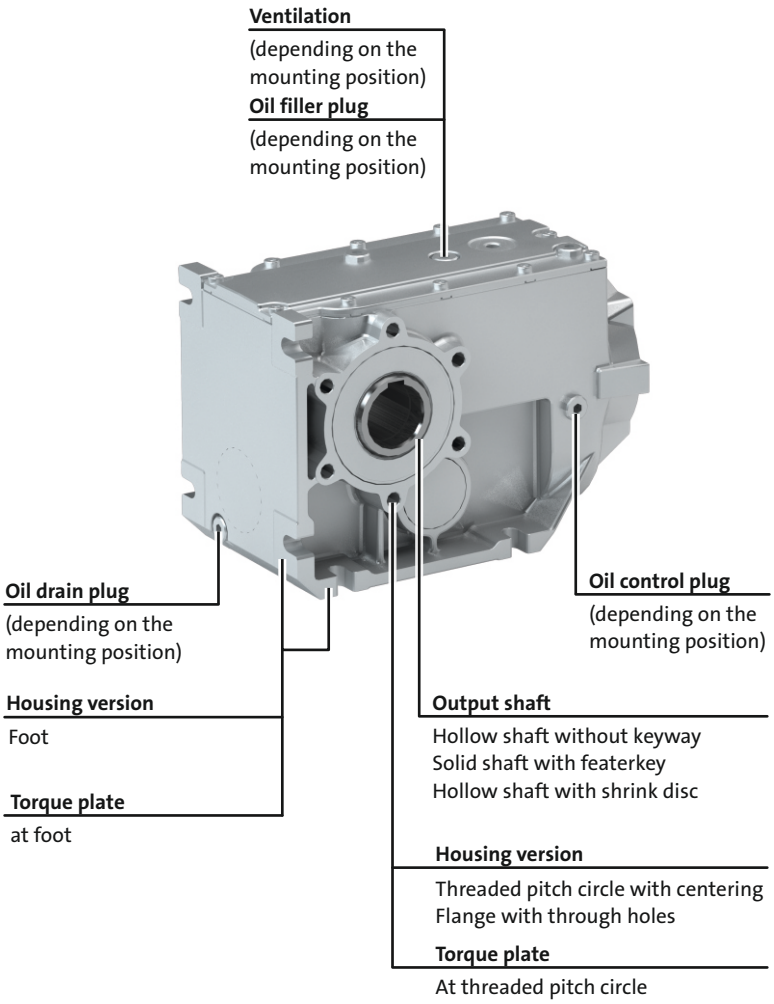

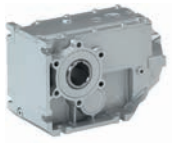

The gearbox kit

Gearbox details

Product	g500-B45	g500-B110	g500-B240	g500-B450
Driven shaft				
Solid shaft without keyway [mm]				
Solid shaft with featherkey [mm]	20x40		30x60	
Hollow shaft with keyway [mm]	18/20	20/25	30/35	35/40
Hollow shaft with shrink disc [mm]	20		30/35	35
Design	Standard stainless steel			
Gasket	Standard FPM (Viton)			
Bearing	Standard			
Fitting grease	Not enclosed Enclosed			
Housing				
Housing version	With foot With foot and centering			
Output flange				
flange diameter [mm]	110/120	120/160	160/200	200
Lubricant				
Type	CLP 460 [1)] CLP HC 320 CLP HC 220 CLP HC 220 USDA H1			
Oil-level inspection	Without inspection			Without inspection With inspection
Breather element	Without			Standard mounting position: Mounted Combined mounting position: loosely enclosed
Backlash				
Backlash	Standard			
Accessories				
Torque plate	Rubber buffers At threaded pitch circle	At threaded pitch circle	At threaded pitch circle At foot	At foot
Shaft cover	Hollow shaft Shrink disc: Rotating cover Shrink disc: Fixed cover			

6.7

[1)] Not suitable for geared servo motors.

► Further information and installation feasibilities can be found in the Gearboxes chapter.



The gearbox kit

Gearbox details

Solid shaft



Foot mounting
without centring



Foot mounting
With centering



Flange with through holes

Hollow shaft



Foot mounting
without centring



Foot mounting
With centering



Flange with through holes

Hollow shaft with shrink disc



Foot mounting
without centring



Foot mounting
With centering

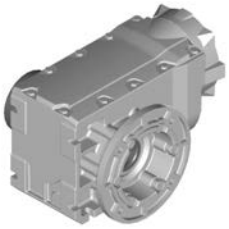

Flange with through holes

Accessories



2nd output shaft end



Torque plate
at foot



Torque plate
at threaded pitch circle

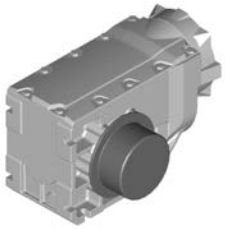

Cover
Hollow shaft/shrink disc

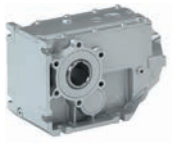

Functions and features

Product	g500-B45	g500-B110	g500-B240	g500-B450
Housing				
Design	Cuboid			
Material	Aluminium			
Solid shaft				
Design	with keyway to DIN 6885			
Tolerance	Shaft diameter ≤ 50 mm: k6 Shaft diameter > 50 mm: m6			
Material	Tempered steel C45 Nirosta X46Cr13			
Hollow shaft				
Design	With keyway Without keyway (for shrink disc)			
Tolerance	Bore H7			
Material	Tempered steel C45 Nirosta X46Cr13			
Toothed parts				
Design	Ground tooth flanks Optimised tooth flank geometry			
Material	Case-hardened steel			
Shaft-hub joint				
	1st and 2nd step: Force-fit 3rd step: positive-fit			
Shaft sealing rings				
Design	With dust lip			
Material	NB / FP			
Bearing				
Design	Ball bearing / tapered-roller bearing depending on size and design			
Lubricants				
	Standard: mineral oil Optional: synthetic oil [1]			
Quantities	Corresponding to mounting position (see nameplate)			
Mechanical efficiency				
2-stage gearboxes [$\eta_{c=1}$]	0.96			
3-stage gearboxes [$\eta_{c=1}$]			0.95	

[1] Standard for geared servo motors.

Direction of rotation

2-stage gearboxes B45 ... B240 3-stage gearbox B450	3-stage gearbox B240
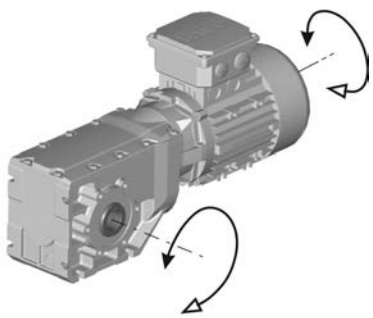	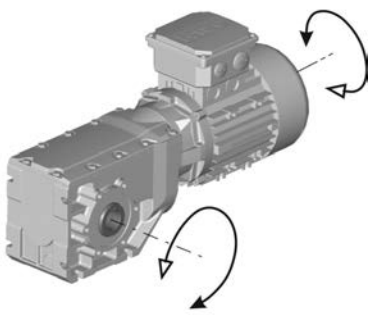

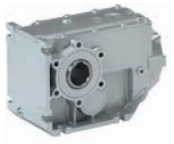

Lubricants

Lenze gearboxes and geared motors are ready for operation on delivery and are filled with lubricants specific to both the drive and the design. The mounting position and design specified in the order are key factors in choosing the volume of lubricant.

The lubricants listed in the lubricant table are approved for use in Lenze drives.

Lubricant table

Mode	CLP 460	CLP HC 320	CLP HC 220 USDA H1
Ambient temperature [°C]	0 ... +40	-25 ... +50	-20 ... +40
Specification	Mineral based oil with additives	Synthetic-based oil (synthetic hydrocarbon / poly-alpha-olefin oil)	
Changing interval	16000 operating hours not later than after three years (oil temperature 70 to 80 °C)	25000 operating hours not later than after three years (oil temperature 70 to 80 °C)	16000 operating hours not later than after three years (oil temperature 70 to 80 °C)
Fuchs	Fuchs Renolin CLP 460	Fuchs Renolin Unisyn CLP 320	bremer & leguil Cassida Fluid GL 220
Klüber	Klüberoil GEM1-460 N	Klübersynth GEM4-320 N	Klüberoil 4 UH1-220 N
Shell	Shell Omala S2 G 460	Shell Omala S4 GX HD 320	

► Please contact your Lenze sales office if you are operating at ambient temperatures in areas up to< -20 °C bzw. > or up to +40°C.

Shaft sealing rings

By default, the gearboxes come with NBR shaft sealing rings at the output end. At high speed and unfavourable ambient conditions as high temperature, reduced circulation of air etc., Lenze recommends the use of Viton shaft sealing rings.

Please consider this in your order.



Ventilation

Non-ventilated gearboxes

No ventilation is required for gearboxes g500-B45 to B240.

Ventilated gearboxes

The g500-B450 gearbox is supplied with a breather element as standard.

Gearboxes in combined mounting position

To reduce the number of different versions, the gearboxes can also be ordered with combined mounting positions.
Depending on the gearbox in question, the following combinations are available:
- g500-B45 in combined mounting position ABCDEF
- g500-B110 ... B450 in combined mounting position AEF

The breather elements are supplied loose.



Ventilation

g500-B240

► **A ... F** mounting position

A	B
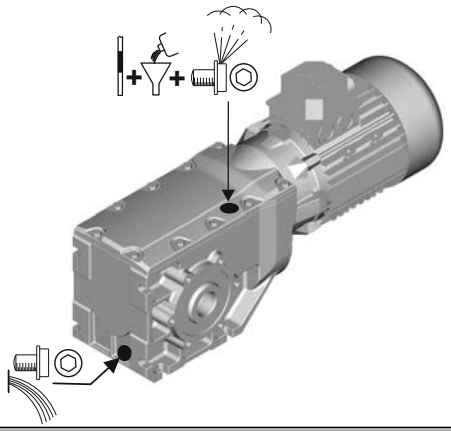	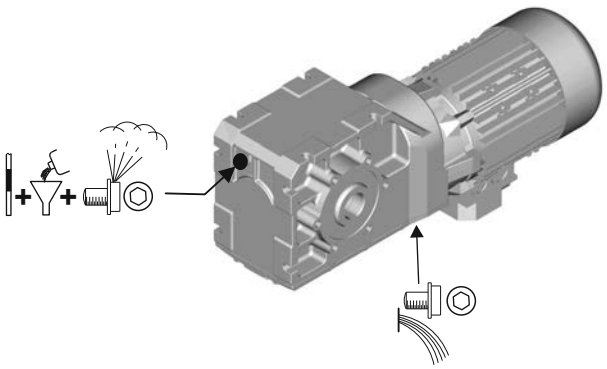
C	**D**
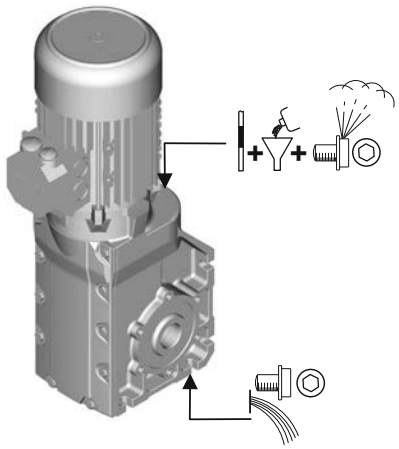	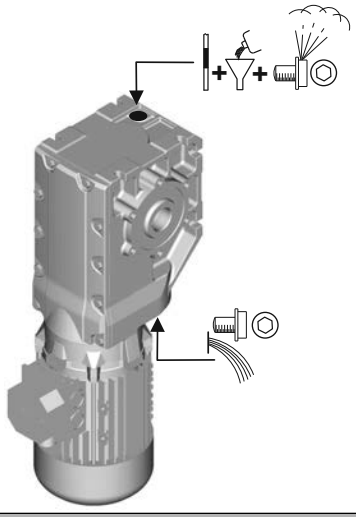
E	**F**
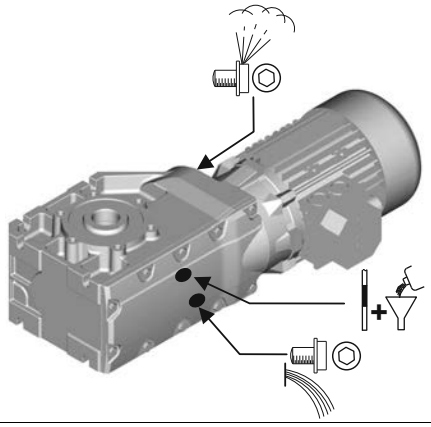	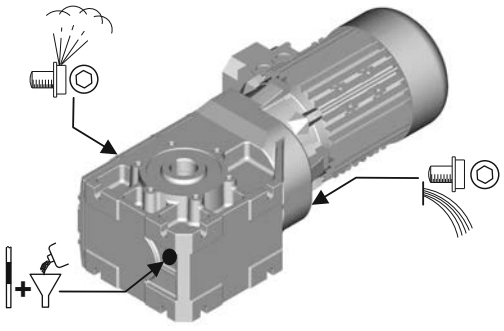

	Filler		Drain
	Breather element		Check



Ventilation

g500-B450

► **A ... F** mounting position

A	B
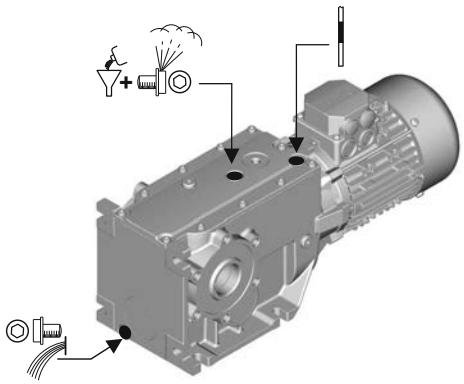	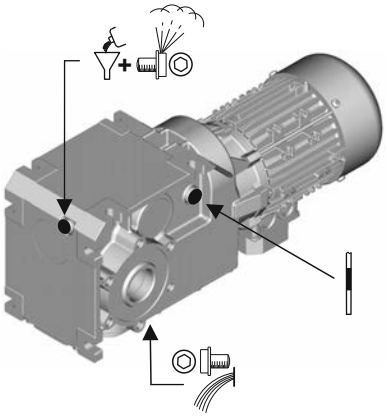
C	**D**
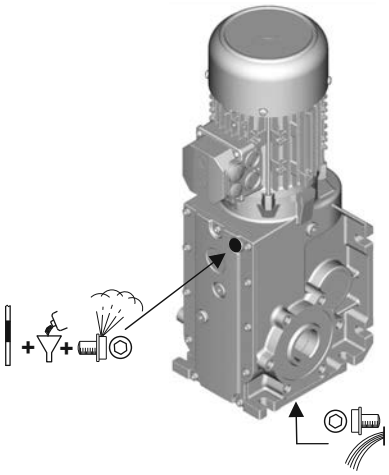	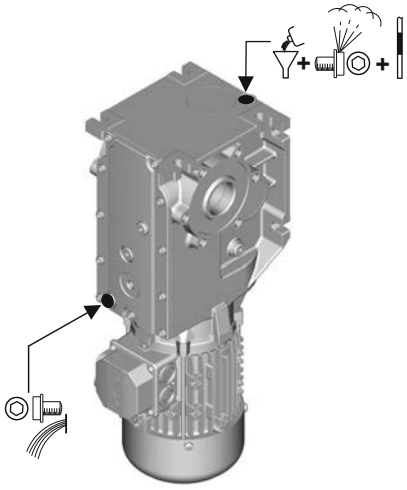
E	**F**
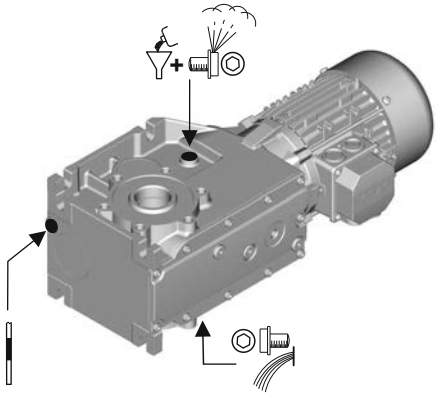	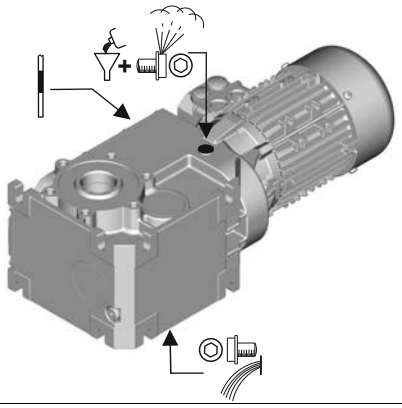

	Filler		Drain
	Breather element		Check

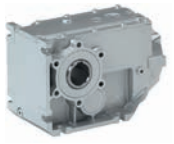

Permissible radial and axial forces at output

Permissible radial force

$F_{rad,perm} = f_w \times F_{rad,max}$

Permissible axial force

If there is no radial force, the maximum permissible axial force is 50 % of the table value $F_{rad,max}$

► If F_{rad} **and** $F_{ax} \neq 0$, please contact Lenze.

Application of forces

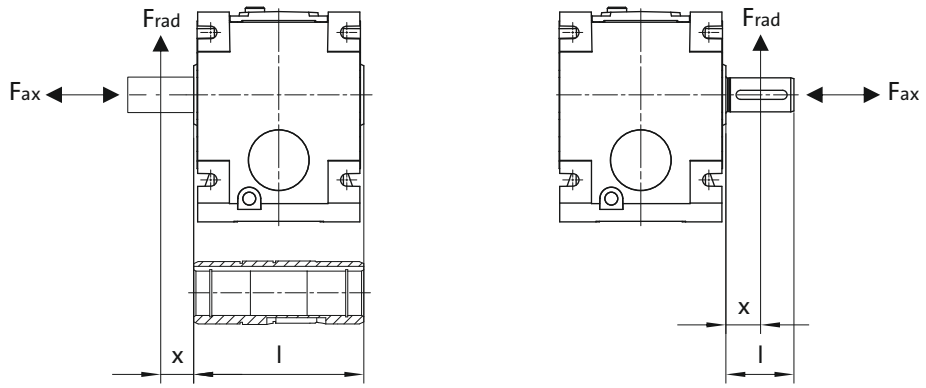

Additional load factor f_w at output shaft

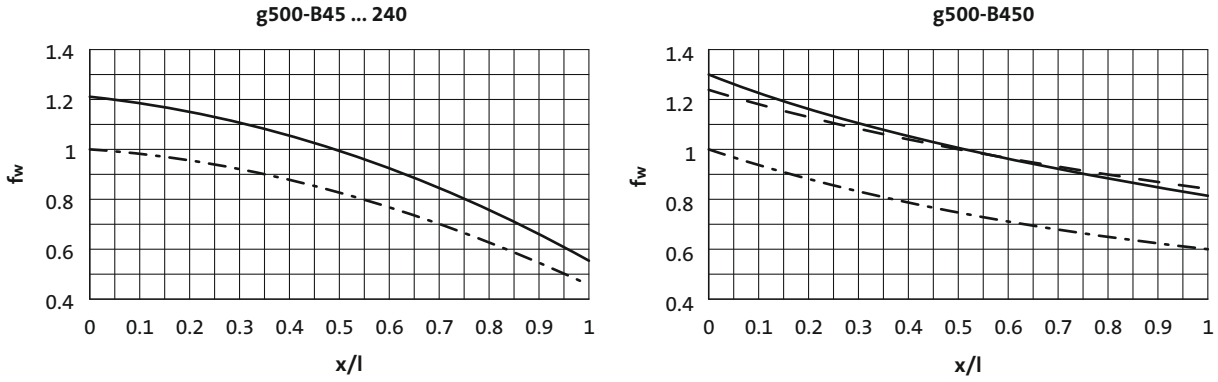

——— Solid shaft
— — — Solid shaft with flange
— · — Hollow shaft

6.7

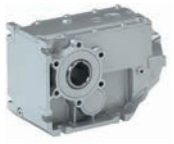

Permissible radial and axial forces at output

The values given in the table refer to the center shaft end force application point and are minimum values calculated according to the most unfavourable conditions (force application angle, mounting position, direction of rotation). The values were calculated for the motor/gearbox combination with a load capacity of c= 1.3 and an input speed of 1400 rpm.

- ► If the torque is transmitted via the flange face, max 50 % of the radial force $F_{rad,max}$ are permissible.
- ► Neither radial nor axial forces are permissible for the hollow shaft with shrink disc.

In case of different operating conditions, considerably higher forces can be transmitted. Please contact Lenze.

Product	n_2 [r/min]									
	1000	630	400	250	160	100	63	40	25	≤16

	Max. radial force, Hollow shaft									
	$F_{rad,max}$	$F_{rad,max}$	$F_{rad,max}$	$F_{rad,max}$	$F_{rad,max}$	$F_{rad,max}$	$F_{rad,max}$	$F_{rad,max}$	$F_{rad,max}$	$F_{rad,max}$
	[N]	[N]	[N]	[N]	[N]	[N]	[N]	[N]	[N]	[N]
g500-B45	900	1200	2200	2500	2800	3000	3000	3000	3000	3000
g500-B110	1000	2200	2550	3000	3300	3600	3600	3600	3600	3600
g500-B240	1500	2250	3800	4500	5100	6200	7400	7800	7800	7800
g500-B450	3000	3800	5000	5200	5200	5500	7000	9000	9000	9000

	Max. radial force, Solid shaft without flange									
	$F_{rad,max}$	$F_{rad,max}$	$F_{rad,max}$	$F_{rad,max}$	$F_{rad,max}$	$F_{rad,max}$	$F_{rad,max}$	$F_{rad,max}$	$F_{rad,max}$	$F_{rad,max}$
	[N]	[N]	[N]	[N]	[N]	[N]	[N]	[N]	[N]	[N]
g500-B45	900	1200	1800	2100	2400	2800	3000	3000	3000	3000
g500-B110	1000	1800	2100	2500	2700	3000	3000	3000	3000	3000
g500-B240	1500	2350	3000	3600	4500	5000	6000	6500	6500	6500
g500-B450	1800	2800	3600	4200	5100	6000	7200	7800	7800	7800

	Max. radial force, Solid shaft with flange									
	$F_{rad,max}$	$F_{rad,max}$	$F_{rad,max}$	$F_{rad,max}$	$F_{rad,max}$	$F_{rad,max}$	$F_{rad,max}$	$F_{rad,max}$	$F_{rad,max}$	$F_{rad,max}$
	[N]	[N]	[N]	[N]	[N]	[N]	[N]	[N]	[N]	[N]
g500-B45	900	1200	1800	2100	2400	2800	3000	3000	3000	3000
g500-B110	1000	1800	2100	2500	2700	3000	3000	3000	3000	3000
g500-B240	2400	3600	5200	6000	6500	6500	6500	6500	6500	6500
g500-B450	3000	4000	5500	6200	7000	7500	7800	7800	7800	7800

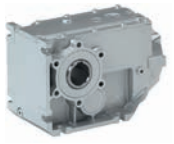

Moments of inertia

- The moments of inertia relate to the drive shaft of the gearbox.
- The total moment of inertia is calculated by adding the values of the gearbox, motor and accessories.

2-stage gearboxes

Product	Ratio	Moment of inertia
	i	J
		[kgcm²]
g500-B45	5.411	0.31
	6.222	0.28
	7.111	0.20
	8.178	0.18
	9.101	0.13
	10.466	0.12
	11.640	0.086
	13.386	0.079
	15.111	0.059
	17.378	0.055
	19.365	0.038
	22.270	0.054
	25.051	0.025
	28.808	0.023
	32.593	0.016
	37.481	0.015
	42.222	0.010
	48.556	0.009
	53.889	0.006
	61.972	0.006
g500-B110	5.185	0.79
	5.963	0.70
	7.111	0.48
	8.178	0.43
	9.101	0.32
	10.466	0.29
	11.449	0.26
	12.698	0.19
	14.603	0.18
	15.556	0.14
	17.889	0.13
	19.556	0.095
	22.489	0.088
	25.185	0.063
	28.963	0.060
	31.919	0.041
	36.707	0.039
	37.400	0.072
	40.000	0.028
	46.000	0.027
	48.167	0.050
	52.698	0.017
	60.603	0.016
	61.045	0.033
	76.500	0.023
	100.786	0.014

Product	Ratio	Moment of inertia
	i	J
		[kgcm²]
g500-B240	3.565	2.97
	4.889	1.74
	6.257	1.15
	6.883	1.67
	7.817	1.51
	9.440	1.05
	10.720	0.97
	12.081	0.73
	13.719	0.68
	15.008	0.59
	16.857	0.45
	19.143	0.42
	20.650	0.34
	23.450	0.32
	26.878	0.21
	30.522	0.20
	33.433	0.15
	37.967	0.15
	43.267	0.096
	49.133	0.092
	52.510	0.070
	59.630	0.067
	67.113	0.045
	76.213	0.043

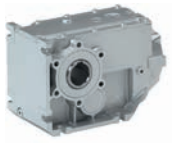

Moments of inertia

3-stage gearboxes

Product	Ratio	Moment of inertia
	i	J
		[kgcm²]
g500-B240	68.459	0.093
	77.741	0.091
	87.563	0.062
	99.437	0.061
	113.673	0.044
	129.087	0.043
	145.674	0.030
	165.426	0.030
	188.442	0.021
	213.994	0.020
	245.178	0.014
	278.422	0.014
	317.617	0.003
	360.683	0.003

Product	Ratio	Moment of inertia
	i	J
		[kgcm²]
g500-B450	5.002	4.36
	6.860	2.48
	9.315	3.21
	10.328	3.06
	12.775	1.87
	14.165	1.79
	16.349	1.23
	17.885	1.05
	19.831	1.01
	22.813	0.70
	25.294	0.68
	27.945	0.51
	30.985	0.49
	36.373	0.31
	40.330	0.30
	45.245	0.22
	50.167	0.21
	56.154	0.47
	62.262	0.47
	68.788	0.36
	76.271	0.36
	89.534	0.22
	99.274	0.22
	111.372	0.16
	123.487	0.16
	144.128	0.10
	159.807	0.099
	174.919	0.073
	193.948	0.072
	223.563	0.046
	247.882	0.046

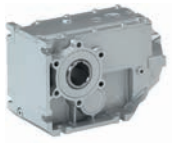

Additional weights for gearboxes

Product			g500-B45	g500-B110	g500-B240	g500-B450
Mass						
Solid shaft	m	[kg]	0.4	0.5	1.4	1.3
Shrink disc	m	[kg]	0.2	0.2	0.7	0.6
Flange	m	[kg]	0.3	0.4	0.7	0.9

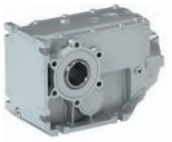

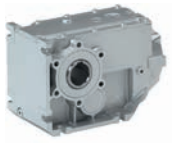

Torque plate

Torque support is usually effected by means of the foot or flange. Another simple possibility is provided by the attachable torque plates. Here, torque support is implemented solely via one point, which, among other things, is suitable for shaft-mounted gearboxes. Supplied rubber buffers provide for mounting with minimum stress and absorb light shocks.
The torque plates are available in two designs, for mounting on the available threaded pitch circle, or for the gearbox foot.

In addition, torque support for the g500-B45 gearbox can be effected via the holding fixture of the housing, which is integrated on both sides, by means of a rubber buffer.
The rubber buffers can be ordered optionally.



Torque plate

Torque plate on threaded pitch circle

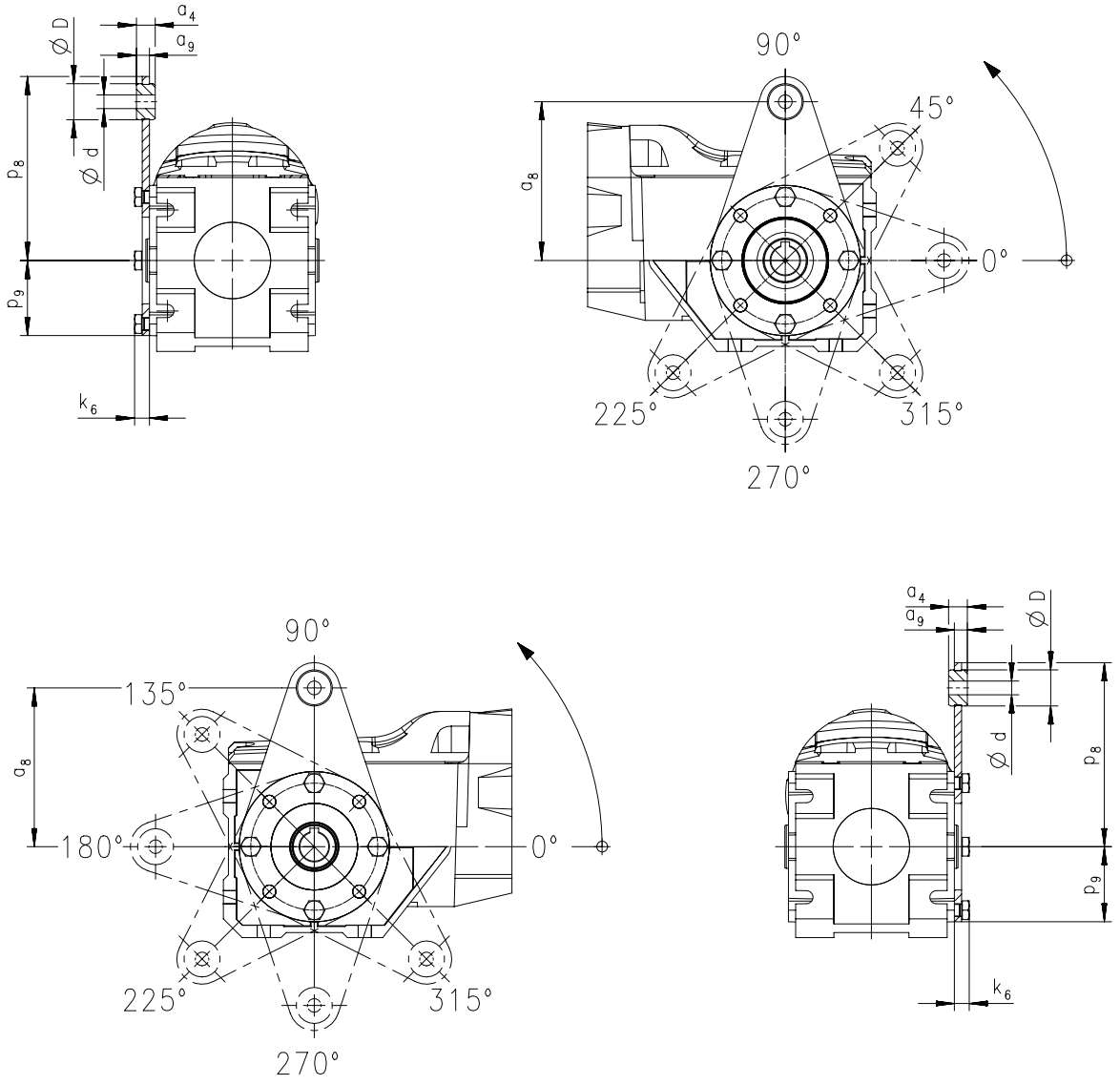

Product	Dimensions								Mass
	a_4	a_8	a_9	d	D	p_8	p_9	k_6	m
	[mm]	[mm]	[mm]	[mm]	[mm]	[mm]	[mm]	[mm]	[kg]
g500-B45	12.0	100	8.0	8.0	20.0	115	42.0	9.0	0.30
g500-B110	13.0	110	9.0	10.0	25.0	128	54.0	11.0	0.50



Torque plate

Torque plate on threaded pitch circle

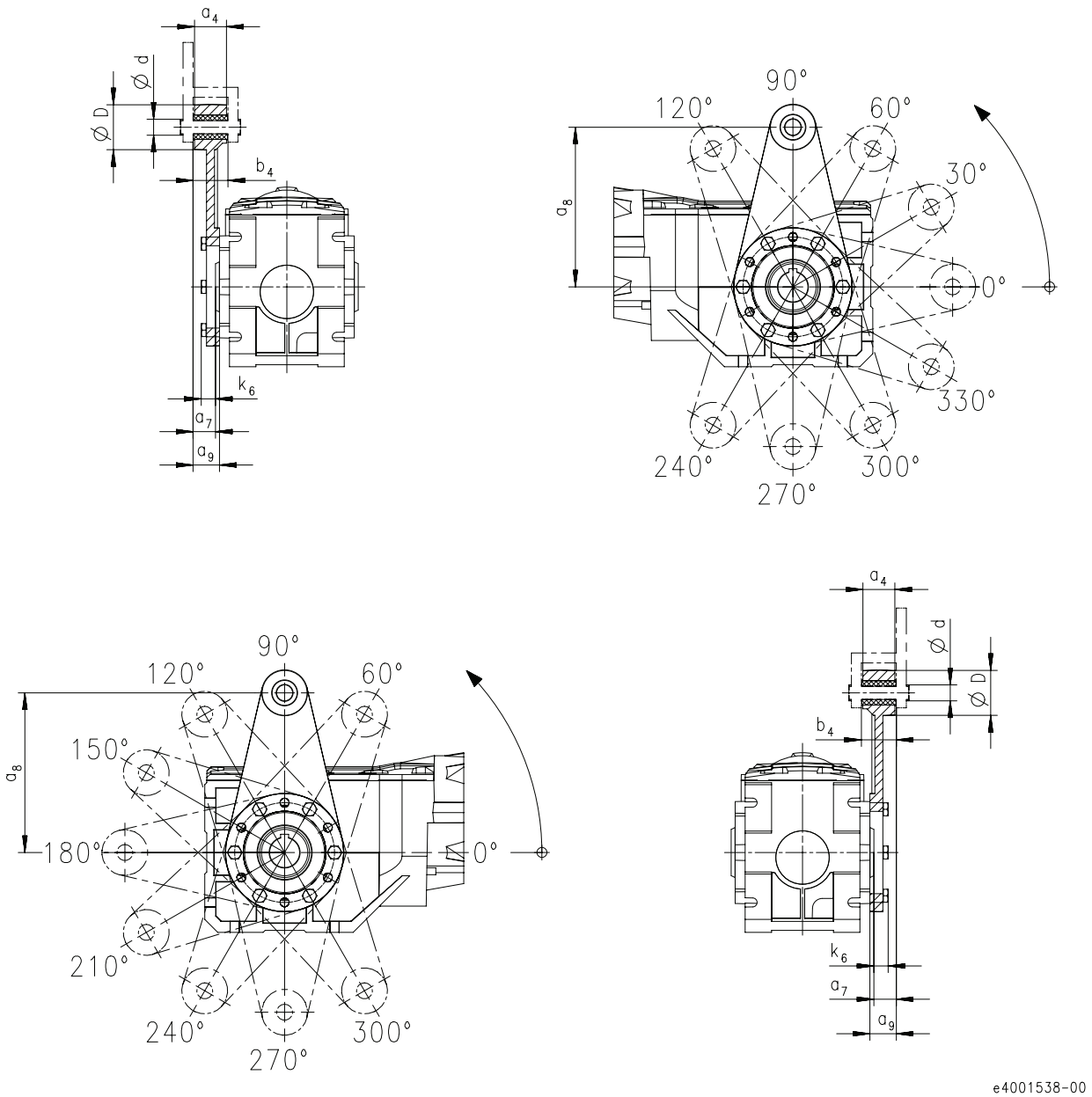

Product	Dimensions								Mass
	a_4	a_7	a_8	a_9	b_4	d	D	k_6	m
	[mm]	[mm]	[mm]	[mm]	[mm]	[mm]	[mm]	[mm]	[kg]
- g500-B240	34.0	23.5	160	27.5	38.5	16.0	45.0	15.0	1.30



Torque plate

Torque plate at housing foot

g500-B240

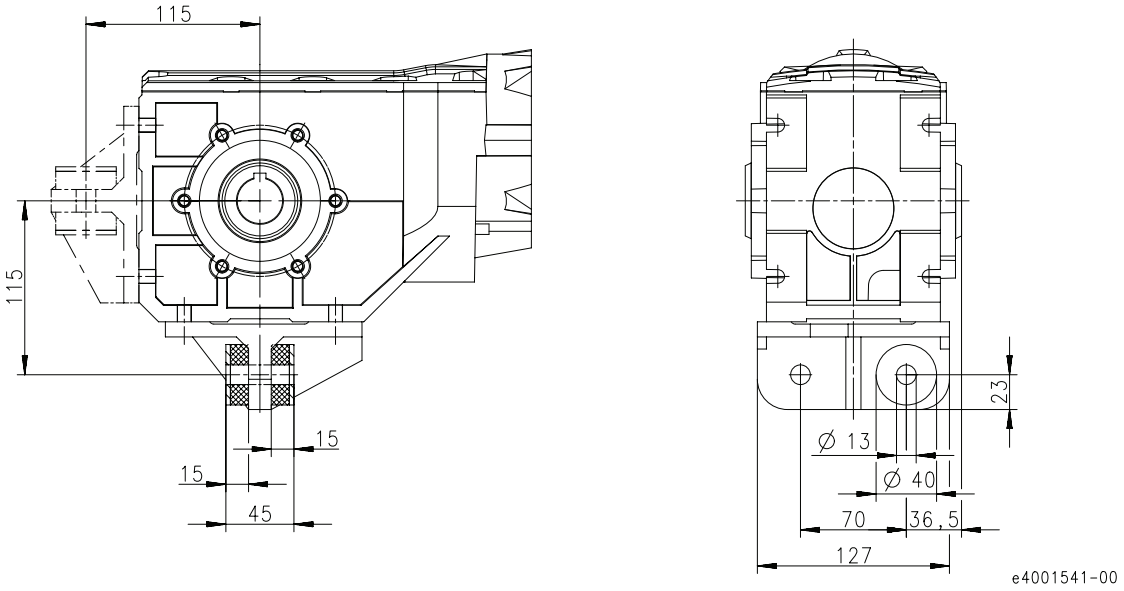

g500-B450

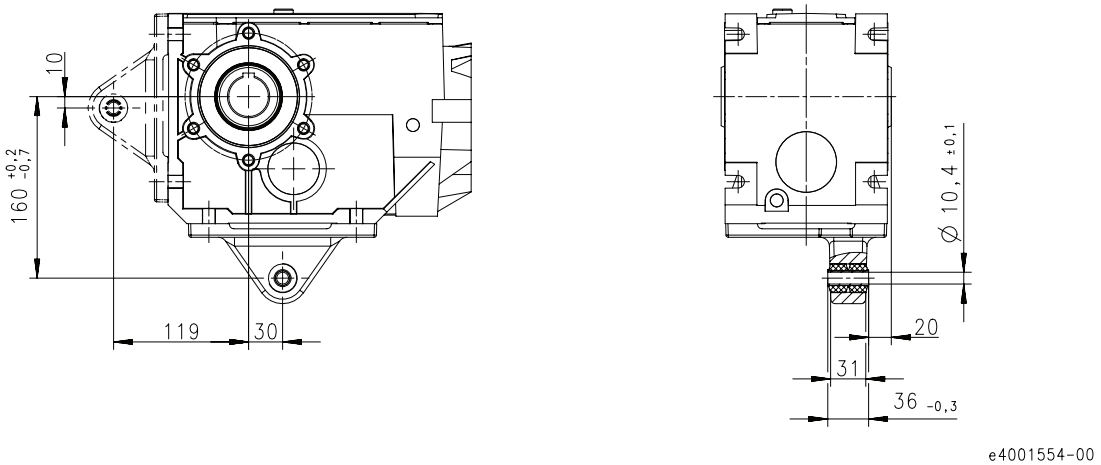

Product	Mass
	m
	[kg]
g500-B240	2.40
g500-B450	1.10



Torque plate

Rubber buffer for torque plate

g500-B45

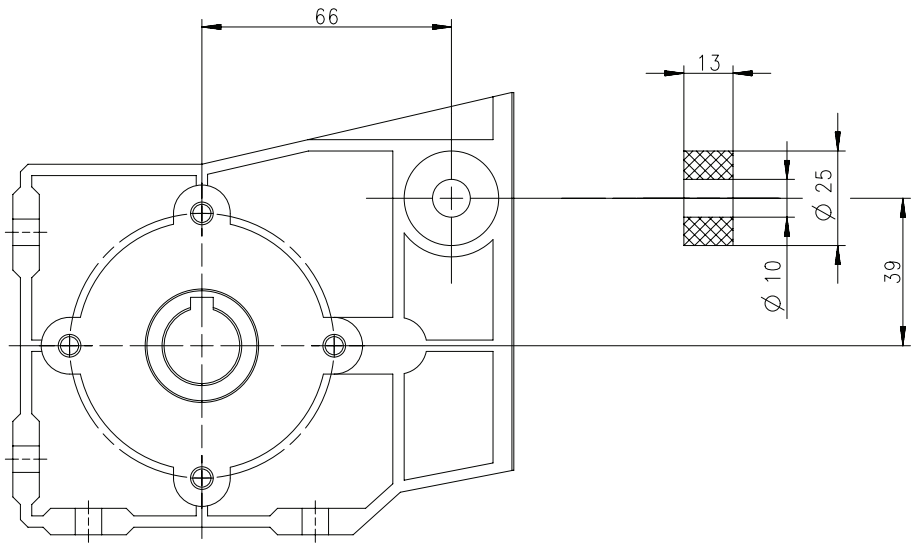



Shaft cover

Hoseproof hollow shaft cover

The cover protects the hollow shaft from objects falling in. It is sealed by a flat gasket between cover and housing. Thus, the hollow shaft is protected from dust and water jets.

The cover is loosely enclosed and can be mounted on both sides of the hollow shaft bore.

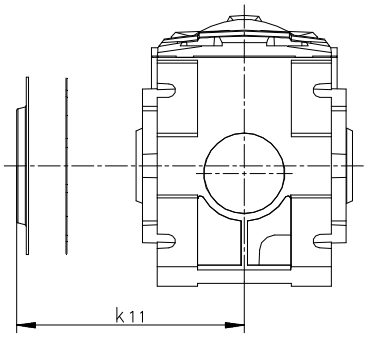

6.7

Product	Dimensions	Mass
	k_{11}	m
	[mm]	[kg]
g500-B45	55.0	0.050
g500-B110	65.0	0.050
g500-B240	75.0	0.10
g500-B450	79.5	0.15



Shaft cover

Shrink disc cover

The cover is provided for the shrink disc to be protected from contact.

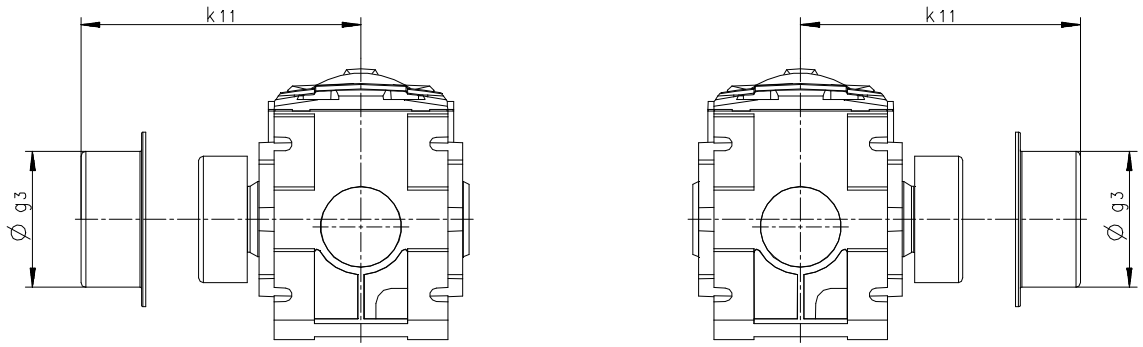

Product	Dimensions		Mass
	g_3	k_{11}	m
	[mm]	[mm]	[kg]
g500-B45	65.0	87.5	0.050
g500-B110	79.0	97.5	0.050
g500-B240	90.0	111	0.050
g500-B450	90.0	108	0.050



MD/MH three-phase AC motors

0.06 to 0.55 kW
0.75 to 45 kW (IE2)

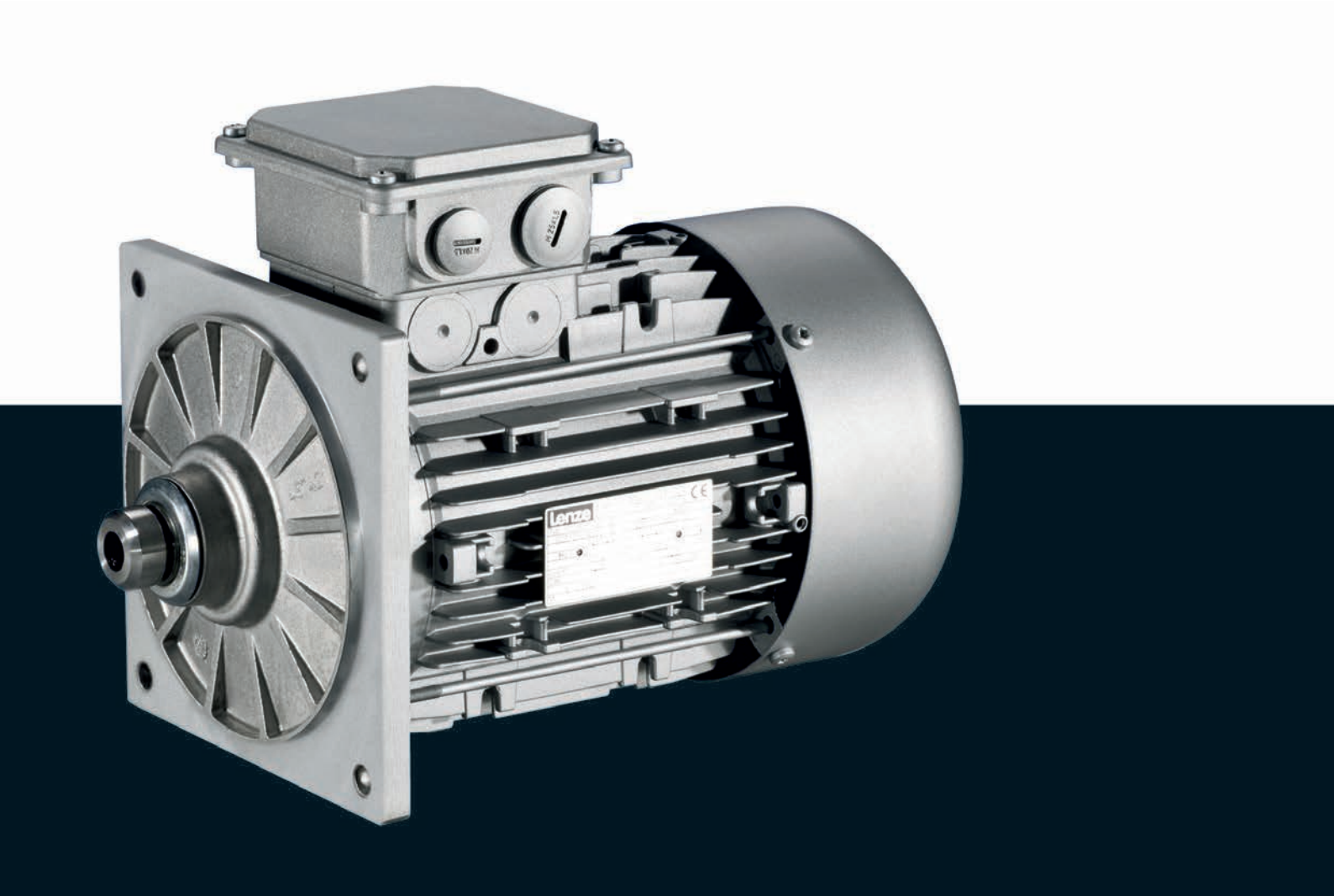

MD/MH three-phase AC motors

Contents



General information	List of abbreviations	6.11 - 4
	Product key	6.11 - 5
	Product information	6.11 - 6
	Functions and features	6.11 - 7
	Motor – inverter assignment	6.11 - 12
	Dimensioning	6.11 - 14
Technical data	Standards and operating conditions	6.11 - 15
	Rated data for 50 Hz	6.11 - 16
	Rated data for 60 Hz	6.11 - 19
	Rated data for 87 Hz	6.11 - 22
	Dimensions, self-ventilated (2-pole)	6.11 - 23
	Dimensions, self-ventilated (4-pole)	6.11 - 24
	Dimensions, self-ventilated (6-pole)	6.11 - 26
	Dimensions, forced ventilated (2-pole)	6.11 - 27
	Dimensions, forced ventilated (4-pole)	6.11 - 28
	Dimensions, forced ventilated (6-pole)	6.11 - 30
	Dimensions, 8400 motec inverter	6.11 - 31
Accessories	Spring-applied brakes	6.11 - 33
	Resolver	6.11 - 47
	Incremental encoder and SinCos absolute value encoder	6.11 - 48
	Blowers	6.11 - 49
	Temperature monitoring	6.11 - 51
	Terminal box	6.11 - 53
	Plug connectors	6.11 - 60
	ICN connector	6.11 - 60
	M12 connector	6.11 - 71
	HAN connector	6.11 - 72
	Handwheel	6.11 - 78
	Centrifugal mass	6.11 - 80
	2nd shaft end	6.11 - 81
	Protection cover	6.11 - 83

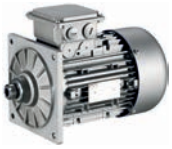

List of abbreviations

$\eta_{100\,\%}$	[%]	Efficiency
$\eta_{75\,\%}$	[%]	Efficiency
$\eta_{50\,\%}$	[%]	Efficiency
cos φ		Power factor
I_N	[A]	Rated current
I_{max}	[A]	Max. current consumption
J	[kgcm²]	Moment of inertia
m	[kg]	Mass
M_a	[Nm]	Starting torque
M_b	[Nm]	Stalling torque
M_{max}	[Nm]	Max. torque
M_N	[Nm]	Rated torque
n_N	[r/min]	Rated speed
P_N	[kW]	Rated power
P_{max}	[kW]	Max. power input

U_{max}	[V]	Max. mains voltage
U_{min}	[V]	Min. mains voltage
$U_{N,\Delta}$	[V]	Rated voltage
$U_{N,Y}$	[V]	Rated voltage

CE	Communauté Européenne
CSA	Canadian Standards Association
DIN	Deutsches Institut für Normung e.V.
EMC	Electromagnetic compatibility
EN	European standard
IEC	International Electrotechnical Commission
IM	International Mounting Code
IP	International Protection Code
NEMA	National Electrical Manufacturers Association
UL	Underwriters Laboratory Listed Product
UR	Underwriters Laboratory Recognized Product
VDE	Verband deutscher Elektrotechniker (Association of German Electrical Engineers)
CCC	China Compulsory Certificate
GOST	Certificate for Russian Federation
cURus	Combined certification marks of UL for the USA and Canada
UkrSEPRO	Certificate for Ukraine



Product key

Drive unit

					C							

Motor type | **Built-on accessories** | **Motor frame size** | **Number of pole pairs** | **Approval**

M			M	A			-					

(example: 071-1)

Motor type

Standard efficiency	D	S	Self-ventilated (without fan)
High efficiency (IE2)	H	E	With integral fan
optimised frequency inverter	F	F	With blower

Number of pole pairs

1	2-pole
2	4-pole
3	6-pole

Approval

C	CE
U	cURus
3	CCC

Built-on accessories

Without brake		Spring-applied brake	
X X	**Without built-on accessories**	B R	**With brake**
R S	**Resolver** RS1	B S	**Resolver** RS1
I G	**HTL incremental encoder** IG128-24V-H IG512-24V-H IG1024-24V-H IG2048-24V-H **TTL incremental encoder** IG512-5V-T IG1024-5V-T IG2048-5V-T	B I	**HTL incremental encoder** IG128-24V-H IG512-24V-H IG1024-24V-H IG2048-24V-H **TTL incremental encoder** IG512-5V-T IG1024-5V-T IG2048-5V-T
A G	**SinCos absolute encoder single-turn,** Hiperface®, AS1024-8V-H **SinCos absolute encoder multi-turn,** Hiperface®, AM1024-8V-H	B A	**SinCos absolute encoder single-turn,** Hiperface®, AS1024-8V-H **SinCos absolute encoder multi-turn,** Hiperface®, AM1024-8V-H
Z E	**2nd shaft end**	B Z	**2nd shaft end**
H A	**Handwheel**	B H	**Handwheel**
L L	**Cast iron fan**	B L	**Cast iron fan**
L Z	**Cast iron fan** **+ 2nd shaft end**		
L H	**Cast iron fan** **+ handwheel**		

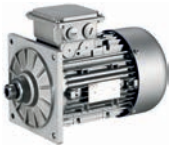

Product information

Special motors have been designed for direct attachment to Lenze gearboxes.

These motors are attached to the gearbox without the use of a clutch. Torque transmission between the toothing and the motor shaft is friction-locked via a tapered connection here.
This motor design means that the geared motors only require a small installation space.

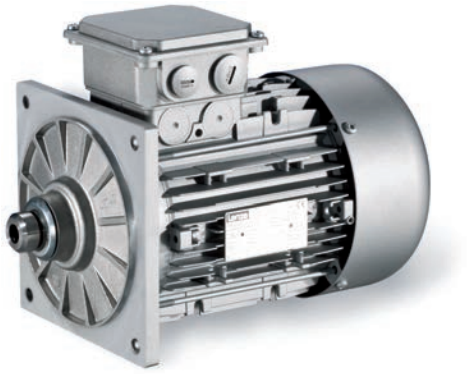

MD/MH L-force three-phase AC motors are available in a power range from 0.06 to 45 kW. From 0.75 kW, they comply with efficiency class IE2 (high efficiency) as per IEC 60034-30.
Since almost all IE2 motors are designed with the same dimensions as the standard efficiency motors, it is easy to switch between the two.
The energy efficiency of the L-force MH three-phase AC motors has been approved by Underwriters Laboratories (UL) as an independent third-party.

Basic versions
- The thermal sensors integrated as standard allow for permanent temperature monitoring and are coordinated to the motor winding's temperature class F (155°C).
- The motors of the basic version are adapted to ambient conditions by enclosure IP55.
- In tough operating conditions, the surface and corrosion protection system is provided to reliably protect the motor from corrosive media.

Options
- Various brake sizes – each available with several braking torques – can be combined with the three-phase AC motors.
- The LongLife version of the brake can easily reach 10 x 10^6 switching cycles.
- A resolver and various incremental and absolute value encoders can be fitted for speed and position detection.
- For fast commissioning, the motors are also available with connectors for the power connection, brake, blower and feedback.
- Instead of an integral fan, the motor can optionally be equipped with a blower. No torque reduction is then necessary, even at speeds below 20 Hz.
- For drive tasks in decentralised applications, the motor can be ordered with the motec inverter connected to the terminal box.
- The motors are available with cURus, GOST-R, CCC and UkrSepro approval.
- Smooth start/braking is possible by increasing the motor's centrifugal mass with a cast iron fan.
- The motor can be equipped with a handwheel for manual setup or emergency operations.
- To protect the fan from objects falling in, the fan cover can be equipped with a protection cover.
- A 2nd shaft end is available for further modifications.



Functions and features

Size		
Motor	063	071
Spring-applied brake		
Design	Standard or LongLife design Reduced or standard braking torque With rectifier With manual release lever Low noise	
Feedback		
Design	Resolver Incremental encoder Absolute value encoder (multi-turn)	
Thermal sensor		
Thermal contact	TKO	
Thermal detector	KTY83-110 KTY84-130	
PTC thermistor	PTC	
Motor connection		
Power connection	Terminal box ICN connector HAN10E connector HAN modular connector	
Brake connection	Terminal box ICN connector HAN modular connector HAN10E connector	
Blower connection	Terminal box ICN connector	
Feedback connection	Terminal box ICN connector	
Temperature sensor connection	Terminal box TKO or PTC at connector in the power connection KTY at connector in the feedback connection	
Shaft bearings		
Position of the locating bearing	Standard motors (B3, B5, B14): side B Motors for gearbox direct mounting: side A	
Bearing type	Deep-groove ball bearing with high-temperature resistant grease, 2 sealing discs or cover plates	
Colour		
	Not coated Primed Paint in various corrosion-protection designs in accordance with RAL colours	
Further options		
	Protection cover	Protection cover Increased centrifugal mass Handwheel 2nd shaft end

[1] With 2-pole motors not available.

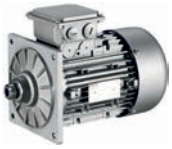

Functions and features

Size			
Motor	080	090	100
Spring-applied brake			
Design	Standard or LongLife design Reduced, standard or increased braking torque With rectifier With manual release lever Low noise		
Feedback			
Design	Resolver Incremental encoder Absolute value encoder (multi-turn)		
Thermal sensor			
Thermal contact	TKO		
Thermal detector	KTY83-110 KTY84-130		
PTC thermistor	PTC		
Motor connection			
Power connection	Terminal box ICN connector HAN10E connector HAN modular connector		
Brake connection	Terminal box ICN connector HAN modular connector HAN10E connector		
Blower connection	Terminal box ICN connector		
Feedback connection	Terminal box ICN connector		
Temperature sensor connection	Terminal box TKO or PTC at connector in the power connection KTY at connector in the feedback connection		
Shaft bearings			
Position of the locating bearing	Standard motors (B3, B5, B14): side B Motors for gearbox direct mounting: side A		
Bearing type	Deep-groove ball bearing with high-temperature resistant grease, 2 sealing discs or cover plates		
Colour			
	Not coated Primed Paint in various corrosion-protection designs in accordance with RAL colours		
Further options			
	Protection cover Increased centrifugal mass Handwheel 2nd shaft end		



Functions and features

Size			
Motor	112	132	160
Spring-applied brake			
Design	Standard design Reduced, standard or increased braking torque With rectifier With manual release lever Low noise		
Feedback			
Design	Resolver Incremental encoder Absolute value encoder (multi-turn)		
Thermal sensor			
Thermal contact	TKO		
Thermal detector	KTY83-110 KTY84-130		
PTC thermistor	PTC		
Motor connection			
Power connection	Terminal box ICN connector HAN10E connector HAN modular connector	Terminal box ICN connector HAN modular connector	Terminal box HAN modular connector
Brake connection	Terminal box ICN connector HAN modular connector HAN10E connector	Terminal box ICN connector HAN modular connector	Terminal box HAN modular connector
Blower connection	Terminal box ICN connector		
Feedback connection	Terminal box ICN connector		
Temperature sensor connection	Terminal box TKO or PTC at connector in the power connection KTY at connector in the feedback connection		
Shaft bearings			
Position of the locating bearing	Standard motors (B3, B5, B14): side B Motors for gearbox direct mounting: side A		
Bearing type	Deep-groove ball bearing with high-temperature resistant grease, 2 sealing discs or cover plates		
Colour			
	Not coated Primed Paint in various corrosion-protection designs in accordance with RAL colours		
Further options			
	Protection cover Increased centrifugal mass Handwheel 2nd shaft end		Protection cover

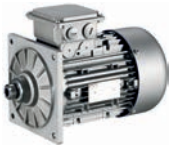

Functions and features

Size			
Motor	180	200	225
Spring-applied brake			
Design	Standard design Reduced, standard or increased braking torque With rectifier With manual release lever Low noise		
Feedback			
Design	Resolver Incremental encoder Absolute value encoder (multi-turn)		
Thermal sensor			
Thermal contact	TKO		
Thermal detector	KTY83-110 KTY84-130		
PTC thermistor	PTC		
Motor connection			
Power connection	Terminal box		
Brake connection	Terminal box		
Blower connection	Terminal box ICN connector		
Feedback connection	Terminal box ICN connector		
Temperature sensor connection	Terminal box		
Shaft bearings			
Position of the locating bearing	Standard motors (B3, B5, B14): side B Motors for gearbox direct mounting: side A		Drive end
Bearing type	Deep-groove ball bearing with high-temperature resistant grease, 2 sealing discs or cover plates		
Colour			
	Not coated Primed Paint in various corrosion-protection designs in accordance with RAL colours		
Further options			



Functions and features

Surface and corrosion protection

For optimum protection of three-phase AC motors against ambient conditions, the surface and corrosion protection system (OKS) offers tailor-made solutions.

Various surface coatings ensure that the motors operate reliably even at high air humidity, in outdoor installation or in the presence of atmospheric impurities. Any colour from the RAL Classic collection can be chosen for the top coat. The three-phase AC motors are also available unpainted (no surface and corrosion protection).

Surface and corrosion protection system	Applications	Measures
OKS-G (primed)	• Dependent on subsequent top coat applied	• 2K PUR priming coat (grey)
OKS-S (small)	• Standard applications • Internal installation in heated buildings • Air humidity up to 90%	• Surface coating as per corrosivity category C1 (in line with EN 12944-2)
OKS-M (medium)	• Internal installation in non-heated buildings • Covered, protected external installation • Air humidity up to 95%	• Surface coating as per corrosivity category C2 (in line with EN 12944-2)
OKS-L (high)	• External installation • Air humidity above 95% • Chemical industry plants • Food industry	• Surface coating as per corrosivity category C3 (in line with EN 12944-2) • Blower cover and B end shield additionally primed • Screws zinc-coated • Cable glands with gaskets • Corrosion-resistant brake with cover ring, stainless friction plate, and chrome-plated armature plate (on request) Optional measures: • Motor recesses sealed off (on request)

Structure of surface coating

Surface and corrosion protection system	Corrosivity category	Surface coating	Colour
	DIN EN ISO 12944-2	Structure	
Without OKS (uncoated)			
OKS-G (primed)		2K PUR priming coat	
OKS-S (small)	C1	2K-PUR top coat	Standard: RAL 7012 Optional: RAL Classic
OKS-M (medium)	C2	2K PUR priming coat 2K-PUR top coat	
OKS-L (high)	C3		

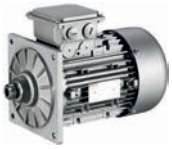

Motor – inverter assignment

Rated frequency 50/60 Hz

- ► Decentralised inverter 8400 motec (E84DVB)
- ► Inverter Drives 8400 (E84AV)

Rated power	Product key		
	Motor	Inverter	
P_N			
[kW]			
0.12	MD□□□□□063-12		E84AV□□□2512□□0
0.18	MD□□□□□063-32		
0.25	MD□□□□□063-42 MD□□□□□071-12		
0.37	MD□□□□□071-32	E84DVB□3714S□□□2□	E84AV□□□3714□□0
0.55	MD□□□□□071-42 MD□□□□□080-12	E84DVB□5514S□□□2□	E84AV□□□5514□□0
0.75	MH□□□□□080-32	E84DVB□7514S□□□2□	E84AV□□□7514□□0
1.10	MH□□□□□090-12	E84DVB□1124S□□□2□	E84AV□□□1124□□0
1.50	MH□□□□□090-32	E84DVB□1524S□□□2□	E84AV□□□1524□□0
2.20	MH□□□□□100-12	E84DVB□2224S□□□2□	E84AV□□□2224□□0
3.00	MH□□□□□100-32	E84DVB□3024S□□□2□	E84AV□□□3024□□0
4.00	MH□□□□□112-22	E84DVB□4024S□□□2□	E84AV□□□4024□□0
5.50	MH□□□□□132-12	E84DVB□5524S□□□2□	E84AV□□□5524□□0
7.50	MH□□□□□132-22	E84DVB□7524S□□□2□	E84AV□□□7524□□0
11.0	MH□□□□□160-22		E84AV□□□1134□□0
15.0	MH□□□□□160-32		E84AV□□□1534□□0
18.5	MH□□□□□180-12		E84AV□□□1834□□0
22.0	MH□□□□□180-32		E84AV□□□2234□□0
30.0	MH□□□□□200-32		E84AV□□□3034□□0
37.0	MH□□□□□225-12		E84AV□□□3734□□0
45.0	MH□□□□□225-22		E84AV□□□4534□□0



Motor – inverter assignment

Rated frequency 87 Hz

- Decentralised inverter 8400 motec (E84DVB)
- Inverter Drives 8400 (E84AV)

Rated power	Product key		
	Motor	Inverter	
P_N			
[kW]			
0.21	MD□□□□□063-12	E84DVB□5514S□□□2□	E84AV□□□5514□□0
0.33	MD□□□□□063-32		
0.45	MD□□□□□063-42 MD□□□□□071-12		
0.66	MD□□□□□071-32	E84DVB□7514S□□□2□	E84AV□□□7514□□0
1.00	MD□□□□□071-42 MD□□□□□080-12	E84DVB□1124S□□□2□	E84AV□□□1124□□0
1.35	MH□□□□□080-32	E84DVB□1524S□□□2□	E84AV□□□1524□□0
2.00	MH□□□□□090-12	E84DVB□2224S□□□2□	E84AV□□□2224□□0
2.70	MH□□□□□090-32	E84DVB□3024S□□□2□	E84AV□□□3024□□0
3.90	MH□□□□□100-12	E84DVB□4024S□□□2□	E84AV□□□4024□□0
5.40	MH□□□□□100-32	E84DVB□5524S□□□2□	E84AV□□□5524□□0
7.10	MH□□□□□112-22	E84DVB□7524S□□□2□	E84AV□□□7524□□0
9.70	MH□□□□□132-12		E84AV□□□1134□□0
13.2	MH□□□□□132-22		E84AV□□□1534□□0
19.4	MH□□□□□160-22		E84AV□□□2234□□0
26.4	MH□□□□□160-32		E84AV□□□3034□□0
32.5	MH□□□□□180-12		E84AV□□□3734□□0

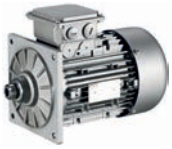

Dimensioning

Torque derating at low motor frequencies

Motor size-dependent torque reduction, taking into account the thermal response during operation on the inverter.

Torque characteristics

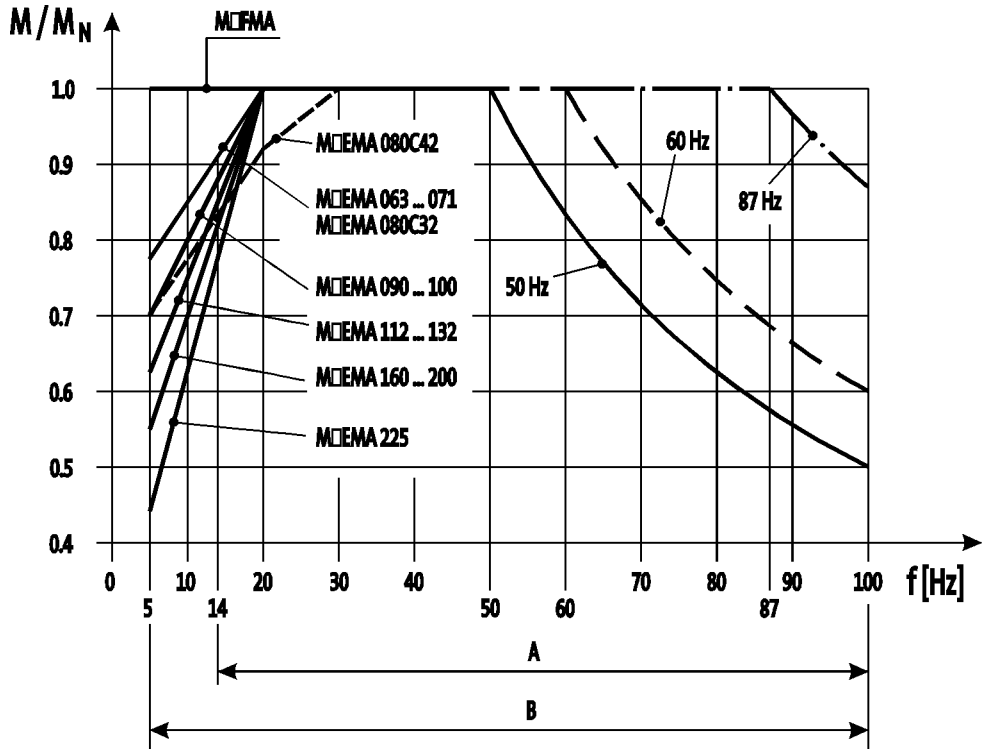

A = Operation with integral fan and brake
B = Operation with integral fan and brake control "Holding current reduction"

► The motor specifications stated in this catalogue for inverter operation apply to operation with a Lenze inverter. If you are uncertain, get in touch with the manufacturer of the inverter to ask whether the device is capable of driving the motor with the stated specifications (e.g. setting range, base frequency).

You can use the Drive Solution Designer for precise drive dimensioning.

The Drive Solution Designer helps you to carry out a fast and high-quality drive dimensioning.
The software includes well-founded and proven knowledge on drive applications and electro-mechanical drive components.

Please contact your Lenze sales office.



Standards and operating conditions

Enclosure			
EN 60529			IP55 [1] IP65 [1] IP66 [1]
Energy efficiency class			
IEC 60034-30			IE2
IEC 60034-2-1			Methodology for measuring efficiency
Conformity			
CE			Low-Voltage Directive
			2006/95/EC
EAC			TP TC 004/2011 (TR C
Approval			
			UkrSEPRO
CCC			GB Standard 12350-2009
CSA			CSA 22.2 No. 100 CSA C390-10
cURus [2]			UL 1004-1 UL 1004-8 Power Conversion Equipment (File-No. E210321)
Temperature class			
IEC/EN 60034-1; utilisation			B
IEC/EN 60034-1; insulation system (enamel-insulated wire)			F
Min. ambient operating temperature			
	$T_{opr,min}$	[°C]	-20
Max. ambient temperature for operation			
	$T_{opr,max}$	[°C]	40
With power reduction	$T_{opr,max}$	[°C]	60
Site altitude			
Amsl	H_{max}	[m]	4000
Max. speed			
	n_{max}	[r/min]	4500

[1] Designs with different degrees of protection:
IP55 with brake (IP54 with manual release lever).
IP54 with resolver RS1.
IP54 with HTL incremental encoder IG128-24V-H.
[2] Motor frame size 225, in preparation.

► In the European Union, the ErP Directive stipulates minimum efficiency levels for three-phase AC motors. Geared three-phase AC motors that do not conform with this Directive do not meet CE requirements and must not be marketed in the European Economic Area. For further information about the ErP Directive and the Lenze products to which it relates, please refer to the brochure entitled "International efficiency directives for three-phase AC motors".

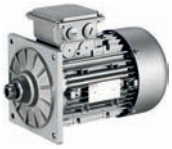

Rated data for 50 Hz

2-pole motors

	P_N	n_N	$U_{N,\Delta}$	$I_{N,\Delta}$	$U_{N,Y}$	$I_{N,Y}$	I_a/I_N
			± 10 %		± 10 %		
	[kW]	[r/min]	[V]	[A]	[V]	[A]	
MD□□□□□063-11	0.18	2740	230	0.80	400	0.46	4.30
MD□□□□□063-31	0.25	2710	230	1.10	400	0.60	3.70
MD□□□□□071-11	0.37	2720	230	1.50	400	0.90	4.40
MD□□□□□071-31	0.55	2630	230	2.40	400	1.40	3.80

	M_N	M_a	M_b	cos φ	$\eta_{75\,\%}$	$\eta_{100\,\%}$	J [1]	m [1]
	[Nm]	[Nm]	[Nm]		[%]	[%]	[kgcm²]	[kg]
MD□□□□□063-11	0.63	1.50	1.50	0.88	66.5	66.0	1.70	3.90
MD□□□□□063-31	0.90	1.90	2.00	0.89	67.0	66.0	1.70	3.80
MD□□□□□071-11	1.29	3.10	2.90	0.92	71.0	69.0	5.10	6.00
MD□□□□□071-31	2.00	3.80	4.20	0.93	70.0	63.0	5.10	6.50

4-pole motors

	P_N	n_N	$U_{N,\Delta}$ [2]	$I_{N,\Delta}$	$U_{N,Y}$	$I_{N,Y}$	I_a/I_N
			± 10 %		± 10 %		
	[kW]	[r/min]	[V]	[A]	[V]	[A]	
MD□□□□□063-02	0.060	1425	230	0.42	400	0.24	3.50
MD□□□□□063-22	0.090	1375	230	0.48	400	0.28	2.90
MD□□□□□063-12	0.12	1425	230	0.85	400	0.49	3.10
MD□□□□□063-32	0.18	1365	230	1.00	400	0.58	2.70
MD□□□□□063-42	0.25	1370	230	1.40	400	0.82	2.90
MD□□□□□071-32	0.37	1410	230	1.60	400	0.95	3.30
MD□□□□□071-42	0.55	1405	230	2.40	400	1.40	3.50

	M_N	M_a	M_b	cos φ	$\eta_{75\,\%}$	$\eta_{100\,\%}$	J [1]	m [1]
	[Nm]	[Nm]	[Nm]		[%]	[%]	[kgcm²]	[kg]
MD□□□□□063-02	0.40	1.30	1.36	0.57	59.0	63.0	3.30	3.90
MD□□□□□063-22	0.63	1.30	1.39	0.71	63.0	65.0	3.30	3.90
MD□□□□□063-12	0.80	2.50	2.64	0.56	58.0	63.0	3.30	4.10
MD□□□□□063-32	1.26	2.50	2.61	0.70	63.0	64.0	3.30	4.10
MD□□□□□063-42	1.74	3.80	4.10	0.67	65.0	66.0	3.70	4.40
MD□□□□□071-32	2.51	4.76	5.81	0.77	73.0	73.0	10.7	5.80
MD□□□□□071-42	3.74	7.85	9.12	0.77	74.0	74.0	12.8	6.40

[1] Without accessories

[2] Operation at 87 Hz is possible with 4-pole motors whose rated data at 50 Hz displays the voltage values Δ 230 V.
With motor frame sizes 132-12 to 225-22, the required voltage must also be specified in your order.



Rated data for 50 Hz

4-pole motors

	P_N	n_N	$U_{N,\Delta}$ [2]	$I_{N,\Delta}$	$U_{N,Y}$	$I_{N,Y}$	I_a/I_N
			± 10 %		± 10 %		
	[kW]	[r/min]	[V]	[A]	[V]	[A]	
MH□□□□□080-32	0.75	1410	230	3.10	400	1.80	5.00
MH□□□□□090-12	1.10	1430	230	4.60	400	2.70	5.40
MH□□□□□090-32	1.50	1435	230	5.80	400	3.30	6.30
MH□□□□□100-12	2.20	1445	230	8.60	400	5.00	6.00
MH□□□□□100-32	3.00	1445	230	12.1	400	7.00	6.50
MH□□□□□112-22	4.00	1455	230	14.5	400	8.40	6.00
MH□□□□□132-12	5.50	1470	230 400 [3]	20.6 11.9	400	11.9	6.10
MH□□□□□132-22	7.50	1460	230 400 [3]	27.0 15.6	400	15.6	8.50
MH□□□□□160-22	11.0	1470	230 400 [3]	37.7 21.8	400	21.8	8.00
MH□□□□□160-32	15.0	1470	230 400 [3]	50.3 29.1	400	29.1	8.20
MH□□□□□180-12	18.5	1475	230 400 [3]	58.8 34.0	400	34.0	8.40
MH□□□□□180-32	22.0	1470	230 400 [3]	68.9 39.8	400	39.8	7.80
MH□□□□□180-42	30.0	1465	230 400 [3]	93.8 53.9	400	53.9	7.00
MH□□□□□225-12	37.0	1483	230 400 [3]	113 65.0	400	65.0	7.50
MH□□□□□225-22	45.0	1480	230 400 [3]	137 79.0	400	79.0	7.60

	M_N	M_a	M_b	cos φ	$\eta_{50\,\%}$	$\eta_{75\,\%}$	$\eta_{100\,\%}$	J [1]	m [1]
	[Nm]	[Nm]	[Nm]		[%]	[%]	[%]	[kgcm²]	[kg]
MH□□□□□080-32	5.08	12.0	12.1	0.84	74.9	79.6	79.6	28.0	11.0
MH□□□□□090-12	7.35	20.3	24.2	0.76	77.4	81.6	82.0	32.0	16.0
MH□□□□□090-32	10.0	33.0	34.0	0.76	82.2	83.4	82.8	36.0	18.0
MH□□□□□100-12	14.5	48.0	55.0	0.80	85.4	86.7	86.3	61.0	24.0
MH□□□□□100-32	19.8	67.0	76.0	0.73	83.8	85.6	85.5	66.0	26.5
MH□□□□□112-22	26.3	81.0	100	0.80	86.3	88.2	88.3	135	38.0
MH□□□□□132-12	35.7	90.0	108	0.77	88.2	89.3	89.2	290	59.0
MH□□□□□132-22	49.1	110	175	0.79	87.6	88.9	88.7	336	66.0
MH□□□□□160-22	71.5	164	243	0.82	89.4	90.0	89.8	570	109
MH□□□□□160-32	97.4	224	292	0.82	90.2	90.8	90.6	760	124
MH□□□□□180-12	120	359	371	0.86	90.8	91.4	91.2	1390	175
MH□□□□□180-32	143	400	372	0.87	91.4	92.0	91.6	1440	180
MH□□□□□180-42	196	469	528	0.87	91.9	92.5	92.3	1850	200
MH□□□□□225-12	238	620	620	0.87	94.0	94.6	94.3	4610	395
MH□□□□□225-22	290	698	669	0.88	93.7	94.5	94.3	5300	415

[1] Without accessories
[2] Operation at 87 Hz is possible with 4-pole motors whose rated data at 50 Hz displays the voltage values Δ 230 V.
With motor frame sizes 132-12 to 225-22, the required voltage must also be specified in your order.
[3] Star/delta start-up possible at 400 V.

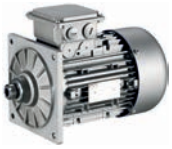

Rated data for 50 Hz

6-pole motors

	P_N	n_N	$U_{N,\Delta}$	$I_{N,\Delta}$	$U_{N,Y}$	$I_{N,Y}$	I_a/I_N
			± 10 %		± 10 %		
	[kW]	[r/min]	[V]	[A]	[V]	[A]	
MD□□□□□071-13	0.18	930	230	1.10	400	0.60	3.90
MD□□□□□071-33	0.25	930	230	1.80	400	1.10	2.80
MD□□□□□080-13	0.37	950	230	2.20	400	1.30	4.00
MD□□□□□080-33	0.55	930	230	2.90	400	1.70	3.50

	M_N	M_a	M_b	cos φ	$\eta_{75\,\%}$	$\eta_{100\,\%}$	J [1]	m [1]
	[Nm]	[Nm]	[Nm]		[%]	[%]	[kgcm²]	[kg]
MD□□□□□071-13	1.80	5.00	5.00	0.66	67.0	69.0	12.5	6.50
MD□□□□□071-33	2.50	6.60	6.60	0.66	67.0	68.0	12.5	6.50
MD□□□□□080-13	3.70	10.1	10.7	0.63	68.0	69.0	26.0	11.0
MD□□□□□080-33	5.60	12.2	12.8	0.70	68.0	68.0	26.0	11.0

[1] Without accessories



Rated data for 60 Hz

- The motors are designed for an operation at 265/460 V but are also able to be operated at 230 V, 60 Hz. The same technical data apply, the starting torque is a bit lower.
- The motors have a service factor of 1.15 at 60 Hz. The service factor indicates the permissible overload during operation within the mains voltage fluctuations.

2-pole motors

	P_N	n_N	$U_{N,\Delta}$	$I_{N,\Delta}$	$U_{N,Y}$	$I_{N,Y}$	I_a/I_N
			± 10 %		± 10 %		
	[kW]	[r/min]	[V]	[A]	[V]	[A]	
MD□□□□□063-11	0.18	3370	265	0.72	460	0.41	5.50
MD□□□□□063-31	0.25	3390	265	0.88	460	0.51	4.80
MD□□□□□071-11	0.37	3360	265	1.30	460	0.76	5.50
MD□□□□□071-31	0.55	3240	265	2.10	460	1.20	4.80

	M_N	M_a	M_b	cos φ	$\eta_{75\,\%}$	$\eta_{100\,\%}$	J [1]	m [1]
	[Nm]	[Nm]	[Nm]		[%]	[%]	[kgcm²]	[kg]
MD□□□□□063-11	0.51	1.38	1.38	0.84	68.3	67.8	1.70	3.90
MD□□□□□063-31	0.72	1.74	1.84	0.86	71.1	70.0	1.70	3.80
MD□□□□□071-11	1.05	2.85	2.66	0.91	74.4	72.3	5.10	6.00
MD□□□□□071-31	1.62	3.49	3.86	0.90	73.6	66.3	5.10	6.50

4-pole motors

	P_N	n_N	$U_{N,\Delta}$ [2]	$I_{N,\Delta}$	$U_{N,Y}$	$I_{N,Y}$	I_a/I_N
			± 10 %		± 10 %		
	[kW]	[r/min]	[V]	[A]	[V]	[A]	
MD□□□□□063-02	0.060	1735	265	0.37	460	0.21	4.40
MD□□□□□063-22	0.090	1695	265	0.43	460	0.25	4.20
MD□□□□□063-12	0.12	1735	265	0.69	460	0.40	4.00
MD□□□□□063-32	0.18	1695	265	0.80	460	0.46	3.60
MD□□□□□063-42	0.25	1680	265	1.30	460	0.75	3.80
MD□□□□□071-32	0.37	1720	265	1.50	460	0.84	3.90
MD□□□□□071-42	0.55	1720	265	2.10	460	1.20	4.10

	M_N	M_a	M_b	cos φ	$\eta_{75\,\%}$	$\eta_{100\,\%}$	J [1]	m [1]
	[Nm]	[Nm]	[Nm]		[%]	[%]	[kgcm²]	[kg]
MD□□□□□063-02	0.33	1.10	1.36	0.54	60.0	63.0	3.30	3.90
MD□□□□□063-22	0.51	1.10	1.40	0.67	64.9	67.0	3.30	3.90
MD□□□□□063-12	0.66	2.25	2.64	0.55	58.0	63.0	3.30	4.10
MD□□□□□063-32	1.00	2.21	2.56	0.68	65.0	66.0	3.30	4.10
MD□□□□□063-42	1.40	3.71	4.20	0.60	64.0	66.0	3.70	4.40
MD□□□□□071-32	2.05	4.40	5.80	0.74	74.0	75.0	10.7	5.80
MD□□□□□071-42	3.05	7.00	9.00	0.73	76.0	77.0	12.8	6.40

[1] Without accessories
[2] Operation at 87 Hz is possible with 4-pole motors whose rated data at 60 Hz displays the voltage values Δ 265 V.
With motor frame sizes 132-12 to 225-22, the required voltage must also be specified in your order.



Rated data for 60 Hz

4-pole motors

- The motors are designed for an operation at 265/460 V but are also able to be operated at 230 V, 60 Hz. The same technical data apply, the starting torque is a bit lower.
- The motors have a service factor of 1.15 at 60 Hz. The service factor indicates the permissible overload during operation within the mains voltage fluctuations.

	P_N	n_N	$U_{N,\Delta}$ [2]	$I_{N,\Delta}$	$U_{N,Y}$	$I_{N,Y}$	I_a/I_N
			± 10 %		± 10 %		
	[kW]	[r/min]	[V]	[A]	[V]	[A]	
MH□□□□□080-32	0.75	1720	265	2.80	460	1.60	5.80
MH□□□□□090-12	1.10	1740	265	4.00	460	2.30	6.50
MH□□□□□090-32	1.50	1745	265	5.10	460	3.00	7.20
MH□□□□□100-12	2.20	1750	265	7.70	460	4.40	6.90
MH□□□□□100-32	3.00	1755	265	10.6	460	6.10	7.70
MH□□□□□112-22	4.00	1760	265	12.8	460	7.40	7.00
MH□□□□□132-12	5.50	1775	265 460 [3]	18.0 10.4	460	10.4	7.10
MH□□□□□132-22	7.50	1765	265 460 [3]	24.2 14.0	460	14.0	9.70
MH□□□□□160-22	11.0	1775	265 460 [3]	32.5 18.7	460	18.7	9.40
MH□□□□□160-32	15.0	1775	265 460 [3]	44.1 24.5	460	24.5	9.80
MH□□□□□180-12	18.5	1775	265 460 [3]	51.1 29.4	460	29.4	9.70
MH□□□□□180-32	22.0	1775	265 460 [3]	59.7 34.4	460	34.4	9.00
MH□□□□□180-42	30.0	1770	265 460 [3]	80.7 46.5	460	46.5	8.10
MH□□□□□225-12	37.0	1787	265 460 [3]	92.5 53.4	460	53.4	8.70
MH□□□□□225-22	45.0	1784	265 460 [3]	111 64.2	460	64.2	8.80

	M_N	M_a	M_b	cos φ	$\eta_{50\,\%}$	$\eta_{75\,\%}$	$\eta_{100\,\%}$	J [1]	m [1]
	[Nm]	[Nm]	[Nm]		[%]	[%]	[%]	[kgcm²]	[kg]
MH□□□□□080-32	4.16	9.37	9.89	0.82	77.9	81.5	82.5	28.0	11.0
MH□□□□□090-12	6.04	17.0	20.0	0.71	79.3	83.0	84.0	32.0	16.0
MH□□□□□090-32	8.21	27.0	28.0	0.75	79.3	83.0	84.0	36.0	18.0
MH□□□□□100-12	12.0	40.0	47.0	0.78	82.6	86.5	87.5	61.0	24.0
MH□□□□□100-32	16.3	55.0	64.0	0.71	84.2	86.6	87.5	66.0	26.5
MH□□□□□112-22	21.7	69.0	84.0	0.79	84.2	86.6	87.5	135	38.0
MH□□□□□132-12	29.6	74.0	92.0	0.77	86.1	88.6	89.5	290	59.0
MH□□□□□132-22	40.6	92.0	147	0.79	86.1	88.6	89.5	336	66.0
MH□□□□□160-22	59.2	148	231	0.81	89.3	90.9	91.0	570	109
MH□□□□□160-32	80.7	210	274	0.81	89.3	90.9	91.0	760	124
MH□□□□□180-12	99.5	338	348	0.86	90.6	92.3	92.4	1390	175
MH□□□□□180-32	118	379	355	0.87	90.6	92.3	92.4	1440	180
MH□□□□□180-42	162	440	505	0.87	92.0	92.9	93.0	1850	200
MH□□□□□225-12	198	590	590	0.87	92.0	92.9	93.0	4610	395
MH□□□□□225-22	241	660	635	0.88	92.6	93.5	93.6	5300	415

[1] Without accessories
[2] Operation at 87 Hz is possible with 4-pole motors whose rated data at 60 Hz displays the voltage values Δ 265 V.
With motor frame sizes 132-12 to 225-22, the required voltage must also be specified in your order.
[3] Star/delta start-up possible at 460 V.



Rated data for 60 Hz

6-pole motors

- The motors are designed for an operation at 265/460 V but are also able to be operated at 230 V, 60 Hz. The same technical data apply, the starting torque is a bit lower.
- The motors have a service factor of 1.15 at 60 Hz. The service factor indicates the permissible overload during operation within the mains voltage fluctuations.

	P_N	n_N	$U_{N,\Delta}$	$I_{N,\Delta}$	$U_{N,Y}$	$I_{N,Y}$	I_a/I_N
			± 10 %		± 10 %		
	[kW]	[r/min]	[V]	[A]	[V]	[A]	
MD□□□□□071-13	0.18	1140	265	0.95	460	0.55	4.60
MD□□□□□071-33	0.25	1140	265	1.70	460	1.00	3.40
MD□□□□□080-13	0.37	1160	265	2.00	460	1.20	4.60
MD□□□□□080-33	0.55	1140	265	2.60	460	1.50	4.10

	M_N	M_a	M_b	cos φ	$\eta_{75\,\%}$	$\eta_{100\,\%}$	J [1]	m [1]
	[Nm]	[Nm]	[Nm]		[%]	[%]	[kgcm²]	[kg]
MD□□□□□071-13	1.47	4.59	4.59	0.62	68.4	70.5	12.5	6.50
MD□□□□□071-33	2.04	6.06	6.06	0.61	69.1	70.1	12.5	6.50
MD□□□□□080-13	3.03	9.28	9.83	0.59	69.5	70.5	26.0	11.0
MD□□□□□080-33	4.56	11.2	11.8	0.66	70.7	70.7	26.0	11.0

[1] Without accessories



Rated data for 87 Hz

4-pole motors

	P_N	n_N	M_N	M_{max}	$U_{N,\Delta}$	$I_{N,\Delta}$	cos φ	$\eta_{50\,\%}$	$\eta_{75\,\%}$	$\eta_{100\,\%}$	J [1]	m [1]
					± 10 %							
	[kW]	[r/min]	[Nm]	[Nm]	[V]	[A]		[%]	[%]	[%]	[kgcm²]	[kg]
MD□□□□□063-02	0.11	2535	0.40	1.60	400	0.42	0.55		62.0	67.0	3.30	3.90
MD□□□□□063-22	0.16	2485	0.63	2.50	400	0.48	0.67		66.0	70.0	3.30	3.90
MD□□□□□063-12	0.21	2535	0.80	3.20	400	0.85	0.52		61.0	66.0	3.30	4.10
MD□□□□□063-32	0.33	2475	1.26	5.00	400	1.00	0.65		68.0	71.0	3.30	4.10
MD□□□□□063-42	0.45	2480	1.74	7.00	400	1.40	0.63		66.0	73.0	3.70	4.40
MD□□□□□071-32	0.66	2520	2.51	10.0	400	1.60	0.72		76.0	78.0	10.7	5.80
MD□□□□□071-42	1.00	2515	3.74	15.0	400	2.40	0.74		79.0	80.0	12.8	6.40
MH□□□□□080-32	1.35	2520	5.12	20.0	400	3.10	0.84	77.3	81.6	83.5	28.0	11.0
MH□□□□□090-12	2.00	2540	7.52	30.0	400	4.60	0.78	80.4	84.9	86.5	32.0	16.0
MH□□□□□090-32	2.70	2545	10.1	40.0	400	5.80	0.76	82.3	85.5	86.0	36.0	18.0
MH□□□□□100-12	3.90	2555	14.6	60.0	400	8.60	0.83	85.7	89.6	90.0	61.0	24.0
MH□□□□□100-32	5.40	2555	20.2	80.0	400	12.1	0.76	84.7	87.9	88.5	66.0	26.5
MH□□□□□112-22	7.10	2565	26.4	106	400	14.5	0.83	87.4	90.2	90.9	135	38.0
MH□□□□□132-12	9.70	2580	35.9	144	400	20.6	0.82	88.2	91.4	91.8	290	59.0
MH□□□□□132-22	13.2	2570	49.1	196	400	27.0	0.82	88.2	90.1	90.7	336	66.0
MH□□□□□160-22	19.4	2580	71.8	287	400	37.7	0.81	90.6	91.0	91.6	570	109
MH□□□□□160-32	26.4	2580	97.7	391	400	50.3	0.81	91.4	91.0	91.6	760	124
MH□□□□□180-12	32.5	2585	120	480	400	58.8	0.86	92.0	92.2	92.8	1390	175
MH□□□□□180-32	38.7	2580	143	573	400	68.9	0.87	92.1	92.9	93.4	1440	180
MH□□□□□180-42	52.7	2575	196	782	400	92.6	0.87	92.6	92.7	93.2	1850	200
MH□□□□□225-12	64.0	2593	236	920	400	113	0.87	93.0	94.4	94.8	4610	395
MH□□□□□225-22	78.0	2590	288	1150	400	137	0.85	93.5	94.3	94.7	5300	415

[1] Without accessories

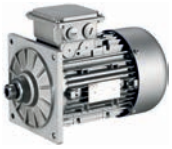

Dimensions, self-ventilated (2-pole)

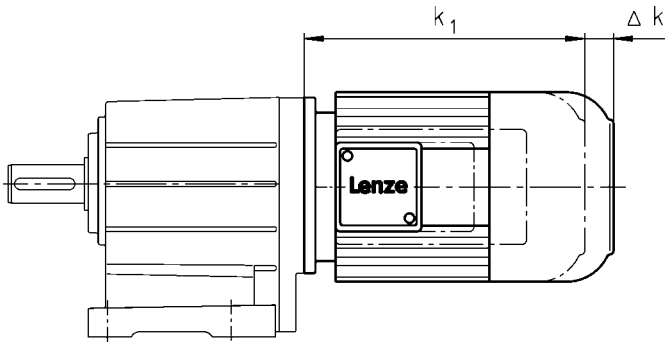

	Motor type			
	MDEMAXX	MDEMABR	MDEMABL	MDEMALL

Motor frame size				
	Δ k	Δ k	Δ k	Δ k
	[mm]	[mm]	[mm]	[mm]
063-11 063-31	0	40		
071-11 071-31		52	52	0



Dimensions, self-ventilated (4-pole)

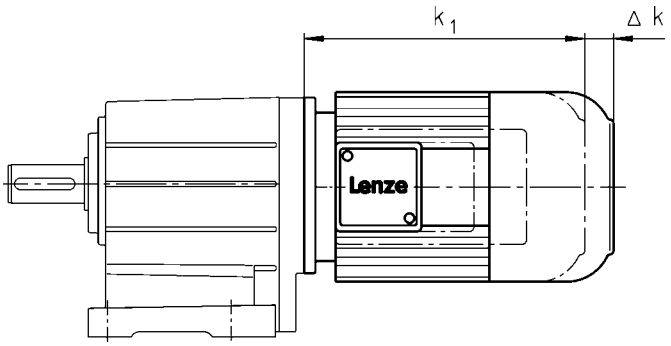

	Motor type					
	MDEMAXX	MDEMABR	MDEMABS MDEMABI MDEMABA	MDEMABL	MDEMARS MDEMAIG MDEMAAG	MDEMALL
Motor frame size						
	Δ k	Δ k	Δ k	Δ k	Δ k	Δ k
	[mm]	[mm]	[mm]	[mm]	[mm]	[mm]
063-02 063-22	0	71	135		71	
063-12 063-32 063-42		40	103		56	
071-32 071-42		52	96	52	52	0



Dimensions, self-ventilated (4-pole)

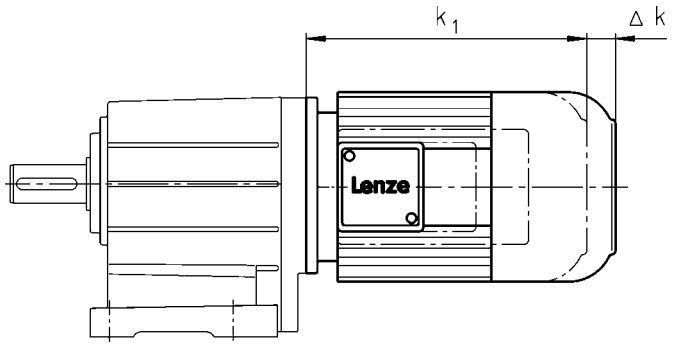

	Motor type			
	MHEMAXX	MHEMABR	MHEMABS MHEMABI MHEMABA	MHEMALL MHEMARS MHEMAIG MHEMAAG
Motor frame size				
	Δ k	Δ k	Δ k	Δ k
	[mm]	[mm]	[mm]	[mm]
080-32	0	73	111	111
090-12 090-32		68	105	87
100-12 100-32		76	101	81
112-22		90	120	80
132-12 132-22		110	125	103
160-22 160-32		105	191	83
180-12 180-32		113	192	79
180-42				
225-12 225-22			193	80



Dimensions, self-ventilated (6-pole)

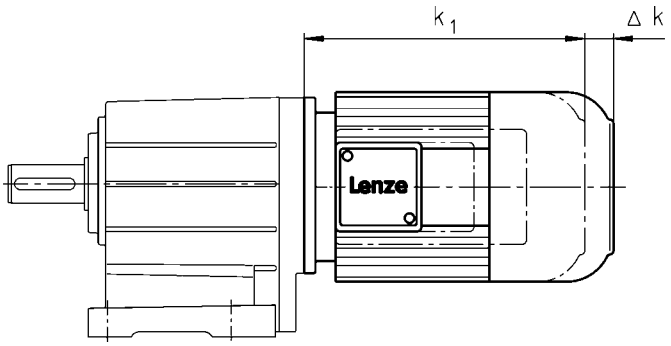

	Motor type					
	MDEMAXX	MDEMABR	MDEMABS MDEMABI MDEMABA	MDEMABL	MDEMARS MDEMAIG MDEMAAG	MDEMALL
Motor frame size						
	Δ k	Δ k	Δ k	Δ k	Δ k	Δ k
	[mm]	[mm]	[mm]	[mm]	[mm]	[mm]
071-13 071-33	0	52	96	52	52	0
080-13 080-33		73	111	73	111	4



Dimensions, forced ventilated (2-pole)

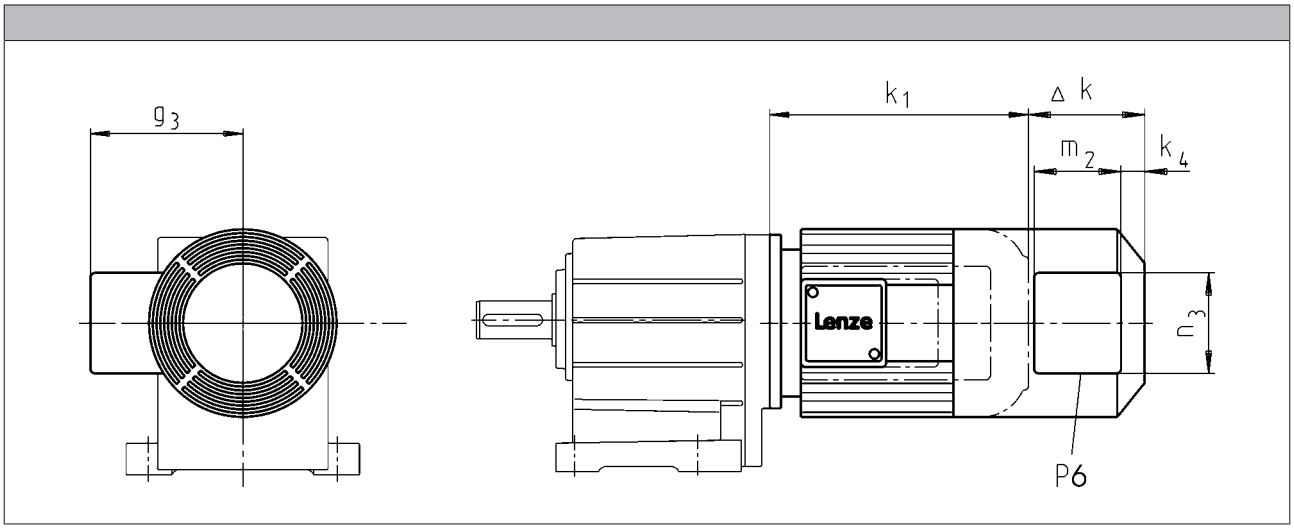

Motor type							
	MDFMAXX	MDFMABR					

Motor frame size							
	Δk	Δk	k_4	g_3	m_2	n_3	P_6
	[mm]	[mm]	[mm]	[mm]	[mm]	[mm]	[mm]
063-11 063-31	128	170	12	115	95	105	1x M16x1.5
071-11 071-31		165		122			

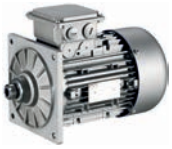

Dimensions, forced ventilated (4-pole)

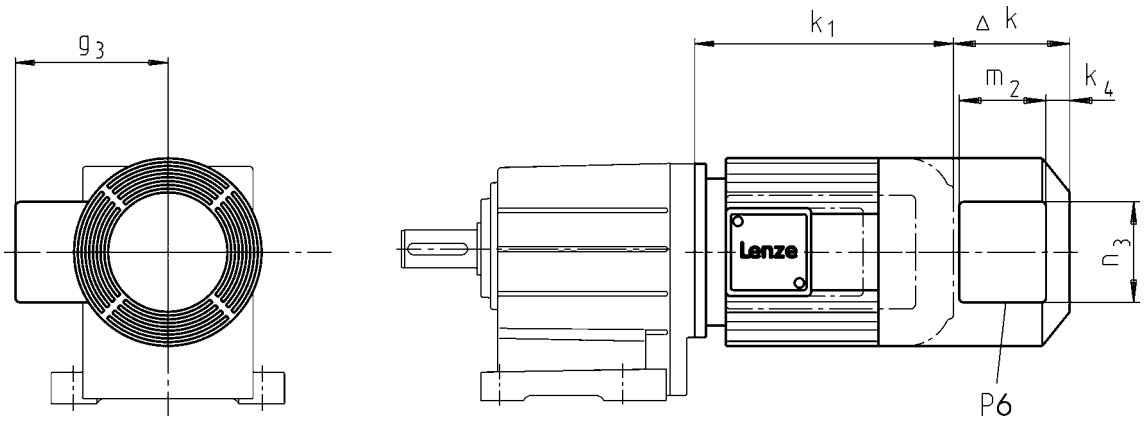

Motor type									
	MDFMAXX	MDFMABR	MDFMABS MDFMABI MDFMABA	MDFMARS MDFMAIG MDFMAAG					

Motor frame size									
	Δ k	Δ k	Δ k	Δ k	k_4	g_3	m_2	n_3	P_6
	[mm]	[mm]	[mm]	[mm]	[mm]	[mm]	[mm]	[mm]	[mm]
063-12 063-32 063-42	128	170	170	128	12	115	95	105	1x M16x1.5
071-32 071-42		165	165			122			



Dimensions, forced ventilated (4-pole)

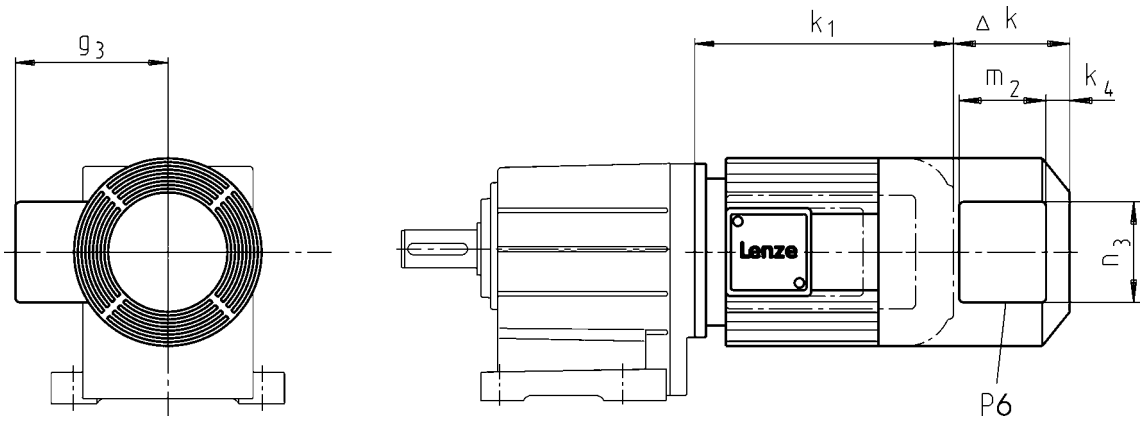

Motor type									
	MHFMAXX	MHFMABR	MHFMABS MHFMABI MHFMABA	MHFMARS MHFMAIG MHFMAAG					

Motor frame size									
	Δ k	Δ k	Δ k	Δ k	k_4	g_3	m_2	n_3	P_6
	[mm]	[mm]	[mm]	[mm]	[mm]	[mm]	[mm]	[mm]	[mm]
080-32	128	183	183	128	13	132	96	106	1x M16x1.5
090-12 090-32		181	181		22	141	95	105	
100-12 100-32	109	170	170	109		150			
112-22	102	183	183	183		162			
132-12 132-22	115	202	202	202	32	182			
160-22 160-32	149	179	237	224	31	209	96	106	
180-12 180-32		215	275	215					
180-42	155		260						
225-12 225-22	213	213	213	213					

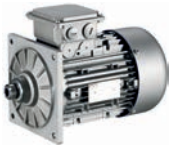

Dimensions, forced ventilated (6-pole)

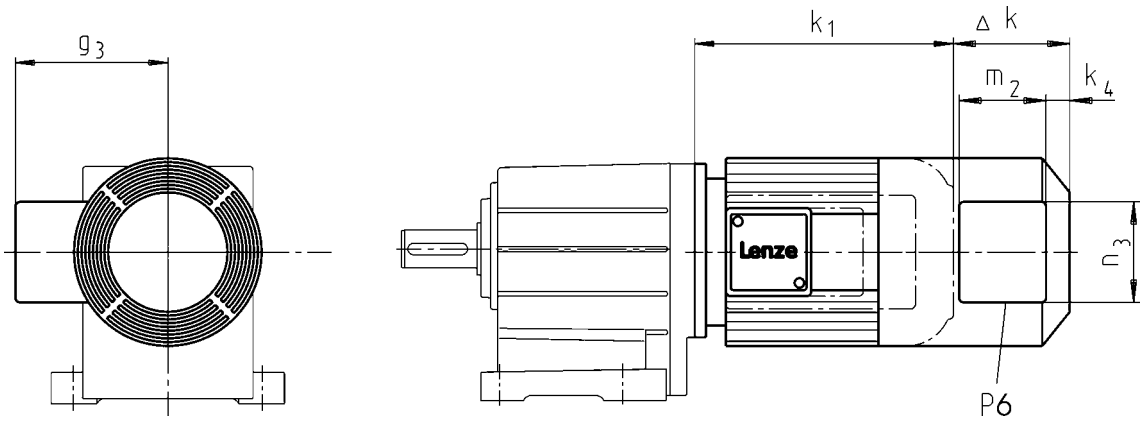

Motor type									
	MDFMAXX	MDFMABR	MDFMABS MDFMABI MDFMABA	MDFMARS MDFMAIG MDFMAAG					

Motor frame size									
	Δ k	Δ k	Δ k	Δ k	k_4	g_3	m_2	n_3	P_6
	[mm]	[mm]	[mm]	[mm]	[mm]	[mm]	[mm]	[mm]	[mm]
071-13 071-33	128	165	165	128	12	122	95	105	1x M16x1.5
080-13 080-33		183	183		13	132	96	106	



Dimensions, 8400 motec inverter

Rated frequency 50/60 Hz

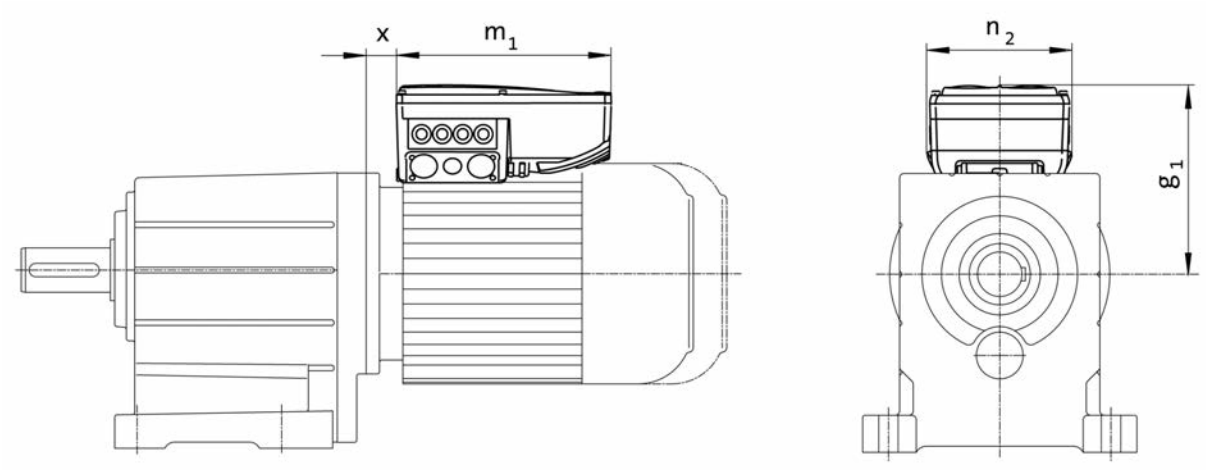

Product key					
Motor	Inverter				
		$g_{1,\ 50Hz}$	$m_{1,\ 50Hz}$	$n_{2,\ 50Hz}$	x_{50Hz}
		[mm]	[mm]	[mm]	[mm]
MD□□□□□071-32	E84DVB□3714S□□□2□	163	241	161	21.0
MD□□□□□071-42	E84DVB□5514S□□□2□				
MH□□□□□080-32	E84DVB□7514S□□□2□	172			25.5
MH□□□□□090-12	E84DVB□1124S□□□2□	177			28.8
MH□□□□□090-32	E84DVB□1524S□□□2□				
MH□□□□□100-12	E84DVB□2224S□□□2□	217	260	176	29.6
MH□□□□□100-32	E84DVB□3024S□□□2□				
MH□□□□□112-22	E84DVB□4024S□□□2□	282	325	195	19.0
MH□□□□□132-12	E84DVB□5524S□□□2□	301			34.5
MH□□□□□132-22	E84DVB□7524S□□□2□				

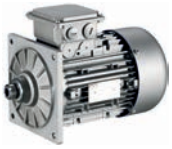

Dimensions, 8400 motec inverter

Rated frequency 87 Hz

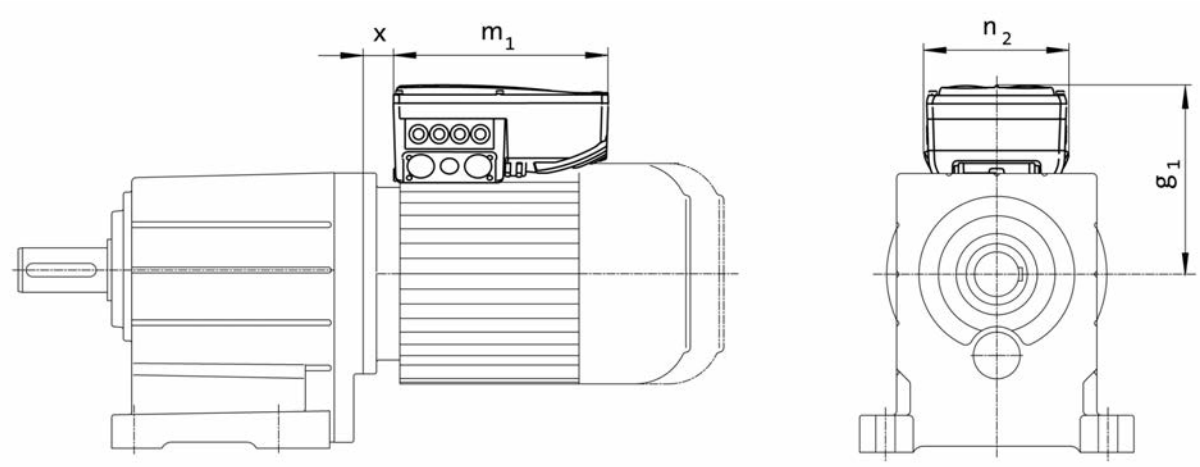

Product key					
Motor	Inverter				
		$g_{1,\ 87Hz}$	$m_{1,\ 87Hz}$	$n_{2,\ 87Hz}$	x_{87Hz}
		[mm]	[mm]	[mm]	[mm]
MD□□□□□063-32	E84DVB□3714S□□□2□	154	241	161	18.8
MD□□□□□063-42	E84DVB□5514S□□□2□				
MD□□□□□071-32	E84DVB□7514S□□□2□	163			21.0
MD□□□□□071-42	E84DVB□1124S□□□2□				
MH□□□□□080-32	E84DVB□1524S□□□2□	172			25.5
MH□□□□□090-12	E84DVB□2224S□□□2□	206	260	176	27.8
MH□□□□□090-32	E84DVB□3024S□□□2□				
MH□□□□□100-12	E84DVB□4024S□□□2□	272	325	195	17.1
MH□□□□□100-32	E84DVB□5524S□□□2□				
MH□□□□□112-22	E84DVB□7524S□□□2□	282			19.0



Spring-applied brakes

Three-phase AC motors can be fitted with a spring-applied brake. This is activated after the supply voltage is switched off (closed-circuit principle). For optimum adjustment of the brake motor to the application, a range of braking torques and control modes is available for every motor frame size. For applications with very high operating frequencies the brake is also available in a LongLife version, with reinforced mechanical brake components.

Features

Versions
- **Standard**
  - 1 x 10^6 repeating switching cycles
  - 1 x 10^6 reversing switching cycles
- **LongLife**
  - 10 x 10^6 repeating switching cycles
  - 15 x 10^6 reversing switching cycles

Control
- DC supply
- AC supply via rectifier in the terminal box

Enclosure
- Without manual release IP55
- With manual release IP54

Friction lining
- Non-asbestos, low wearing

Options
- Manual release
- UL/CSA approval
- Noise-reduced

Assignment of 2-pole motors and brakes

Design	Standard		LongLife	
Motor frame size	Size	Rated torque	Size	Rated torque
	Brake		Brake	
		M_k		M_k
		[Nm]		[Nm]
063-11	06	2.50	06	2.50
063-31	06	4.00	06	4.00
071-11	06	2.50	06	4.00
071-31	06	4.00	08	3.50
	08	3.50		

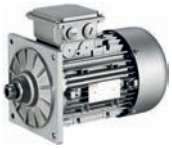

Spring-applied brakes

Assignment of 4-pole motors and brakes

Design	Standard	LongLife

Motor frame size	Size	Rated torque	Size	Rated torque
	Brake		Brake	
		M_k		M_k
		[Nm]		[Nm]
063-02 063-12 063-22 063-32 063-42	06 06	2.50 4.00	06	4.00
071-12 071-32	06 06 08	2.50 4.00 3.50	06 08	4.00 3.50
071-42	06 06 08 08	2.50 4.00 3.50 8.00	06 08 08	4.00 3.50 8.00
080-32	08 08 10	3.50 8.00 7.00	08 10	8.00 7.00
090-12 090-32	08 08 10 10 10	3.50 8.00 7.00 16.0 23.0	08 10 10	8.00 7.00 16.0
100-12	10 10 12 12	7.00 16.0 14.0 32.0	10 12 12	16.0 14.0 32.0
100-32	10 10 12 12 12	7.00 16.0 14.0 32.0 46.0		



Spring-applied brakes

Assignment of 4-pole motors and brakes

Design	Standard		LongLife	
Motor frame size	**Size**	**Rated torque**	**Size**	**Rated torque**
	Brake		Brake	
		M_k		M_k
		[Nm]		[Nm]
112-22	12 12 14 14	14.0 32.0 35.0 60.0		
132-12	14 14 16 16	35.0 60.0 60.0 80.0		
132-22	14 14 16 16 16	35.0 60.0 60.0 80.0 100		
160-22	16 16 18 18	60.0 80.0 80.0 150		
160-32	18 18 18	80.0 150 200		
180-12	18 18 20 20	80.0 150 145 260		
180-32	18 18 20 20 20	80.0 150 145 260 315		
200-32	18 18 20 20 20 20	80.0 150 145 260 315 400		
225-12	25 25 25	265 400 490		
225-22	25 25 25 25	265 400 490 600		

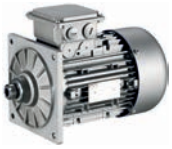

Spring-applied brakes

Assignment of 6-pole motors and brakes

Design	Standard		LongLife	
Motor frame size	**Size**	**Rated torque**	**Size**	**Rated torque**
	Brake		Brake	
		M_k		M_k
		[Nm]		[Nm]
071-13 071-33	06 06 08	2.50 4.00 3.50	06 08	4.00 3.50
080-13 080-33	08 08 10	3.50 8.00 7.00	08 08 10	3.50 8.00 7.00

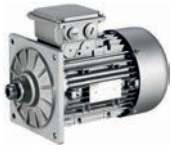

Spring-applied brakes

Direct connection without rectifier

If the brake is activated directly without a rectifier, a freewheeling diode or a spark suppressor is required to protect against induction peaks.

- Supply voltages
  DC 24 V
  DC 180 V
  DC 205 V

Connection via mains voltage with brake rectifier

If the brake is not directly supplied with DC voltage, a rectifier is required. This is included in the scope of supply and is located in the terminal box of the motor. The rectifier converts the AC voltage of the connection into DC voltage. The following rectifiers are available:

Half-wave rectifier, 6-pole

- Ratio of supply voltage to brake coil voltage = 2.22
- Approved by UL/CSA
- Supply voltages
  AC 230 V
  AC 400 V
  AC 460 V



Bridge rectifier, 6-pole

- Ratio of supply voltage to brake coil voltage = 1.11
- Supply voltage
  AC 230 V



Bridge/half-wave rectifier, 6-pole

- Ratio of supply voltage to brake coil voltage
  up to overexcitation time = 1.11
  beyond overexcitation time = 2.22



Supply voltages:

- AC 230 V
- AC 400 V

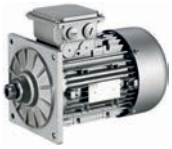

Spring-applied brakes

Connection via mains voltage with brake rectifier

Bridge/half-wave rectifier, 6-pole
- Ratio of supply voltage to brake coil voltage
  up to overexcitation time = 1.11
  beyond overexcitation time = 2.22



Supply voltages:
- AC 230 V
- AC 400 V

During the switching operation the bridge/half-wave rectifier functions as a bridge rectifier for the overexcitation time $t_{ü}$ and then as a half-wave rectifier. This combination optimises the performance of the brake – depending on the assignment of brake coil voltage and supply voltage:

- **Short-time overexcitation of the brake coil**
  Activating the brake coil for the overexcitation time $t_{ü}$ with twice the rated voltage allows the disengagement time to be reduced. The brake opens more quickly and wear on the friction lining is reduced.
  These features make this activation version particularly suitable for lifting applications. It is therefore only available in combination with a brake with increased braking torque.
- **Holding current reduction (cold brake)**
  By reducing the holding current, the bridge/half-wave rectifier is able to reduce the power input to the open brake. As the brake heats up less, this type of activation is known as "cold brake".



Spring-applied brakes

Permissible friction energy

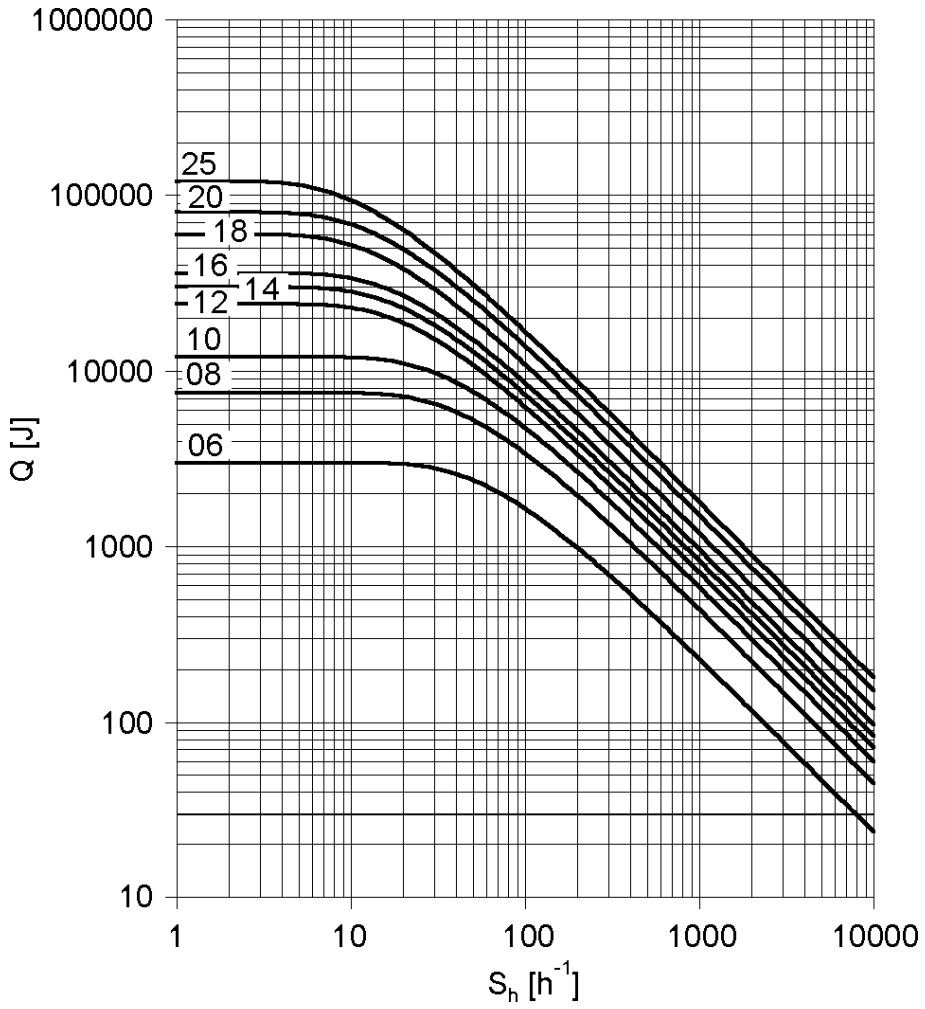

Q =Switching energy per switching cycle
S_h =Operating frequency
Brake size = 06 to 25

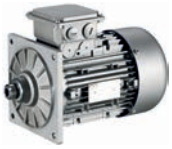

Spring-applied brakes

Rated data with reduced braking torque

► Please enquire for braking torques and maximum switching work values not listed here.

Size			06	08	10	12	14	16	18	20	25
Power input											
	P_{in}	[kW]	0.020	0.025	0.030	0.040	0.050	0.055	0.085	0.10	0.11
Braking torque											
100	M_B	[Nm]	2.50	3.50	7.00	14.0	35.0	60.0	80.0	145	265
1000	M_B	[Nm]	2.30	3.10	6.10	12.0	30.0	50.0	65.0	115	203
1200	M_B	[Nm]	2.30	3.10	6.00	12.0	29.0	48.0	63.0	112	199
1500	M_B	[Nm]	2.20	3.00	5.80	11.0	28.0	47.0	61.0	109 [1)]	193 [1)]
1800	M_B	[Nm]	2.10	2.90	5.70	11.0	28.0	46.0	60.0 [1)]		
3000	M_B	[Nm]	2.00	2.80	5.30	10.0	26.0 [1)]	43.0 [1)]			
3600	M_B	[Nm]	2.00	2.70	5.20	10.0 [1)]					
Maximum switching energy											
100	Q_E	[KJ]	3.00	7.50	12.0	24.0	30.0	36.0	60.0	80.0	120
1000	Q_E	[KJ]	3.00	7.50	12.0	24.0	30.0	36.0	60.0	80.0	120
1200	Q_E	[KJ]	3.00	7.50	12.0	24.0	30.0	36.0	60.0	80.0	120
1500	Q_E	[KJ]	3.00	7.50	12.0	24.0	30.0	36.0	60.0	24.0 [1)]	36.0 [1)]
1800	Q_E	[KJ]	3.00	7.50	12.0	24.0	30.0	36.0	36.0 [1)]		
3000	Q_E	[KJ]	3.00	7.50	12.0	24.0	18.0 [1)]	11.0 [1)]			
3600	Q_E	[KJ]	3.00	7.50	12.0	7.00 [1)]					
Transition operating frequency											
	$S_{hü}$	[1/h]	79.0	50.0	40.0	30.0	28.0	27.0	20.0	19.0	15.0
Moment of inertia											
	J	[kgcm²]	0.015	0.061	0.20	0.45	0.63	1.50	2.90	7.30	20.0
Mass											
	m	[kg]	0.90	1.50	2.60	4.20	5.80	8.70	12.6	19.5	31.0

[1)] In the region of the load limit the value for friction energy Q_{BW} can be reduced to 40 %.

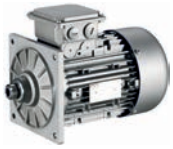

Spring-applied brakes

Rated data with reduced braking torque

► Activation via half-wave or bridge rectifier

Size										
			06	08	10	12	14	16	18	20	25
Friction energy											
	Q_{BW}	[MJ]	113	210	264	706	761	966	1542	2322	3522
Delay time											
Engaging	t_{11}	[ms]	11.0	14.0	20.0	21.0	37.0	53.0	32.0	47.0	264
Rise time											
Braking torque	t_{12}	[ms]	13.0	10.0	17.0	19.0	22.0	30.0	20.0	100	120
Engagement time											
	t_1	[ms]	24.0		37.0	40.0	59.0	83.0	52.0	147	384
Disengagement time											
	t_2	[ms]	35.0	37.0	57.0	65.0	148	169	230	207	269

► Activation via bridge/half-wave rectifier

Design										
			Holding current reduction (cold brake)								
Size										
			06	08	10	12	14	16	18	20	25
Friction energy											
	Q_{BW}	[MJ]	113	210	264	706	761	966	1542	2322	3522
Overexcitation time											
	$t_{ü}$	[ms]	300				1300				
Min. rest time											
	t	[ms]	900				3900				
Delay time											
Engaging	t_{11}	[ms]	12.0	22.0	35.0	49.0	61.0	114	83.0	126	304
Rise time											
Braking torque	t_{12}	[ms]	14.0	16.0	30.0	45.0	37.0	65.0	52.0	269	138
Engagement time											
	t_1	[ms]	26.0	38.0	66.0	93.0	97.0	180	134	395	443
Disengagement time											
	t_2	[ms]	35.0	37.0	57.0	65.0	148	169	230	207	269

► The brake response and application times are guide values. The engagement time is 10 times longer with AC-side switching. With the maximum air gap the disengagement time t_2 – depending on the brake and control – is up to 4 times longer than the disengagement time with the rated air gap.

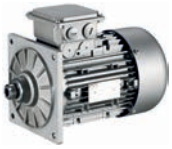

Spring-applied brakes

Rated data with standard braking torque

► Please enquire for braking torques and maximum switching work values not listed here.

Size			06	08	10	12	14	16	18	20	25
Power input											
	P_{in}	[kW]	0.020	0.025	0.030	0.040	0.050	0.055	0.085	0.10	0.11
Braking torque											
100	M_B	[Nm]	4.00	8.00	16.0	32.0	60.0	80.0	150	260	400
1000	M_B	[Nm]	3.70	7.20	14.0	27.0	51.0	66.0	121	206	307
1200	M_B	[Nm]	3.60	7.00	14.0	27.0	50.0	65.0	118	201	300
1500	M_B	[Nm]	3.50	6.80	13.0	26.0	48.0	63.0	115	195 [1)]	291 [1)]
1800	M_B	[Nm]	3.40	6.70	13.0	26.0	47.0	61.0	112 [1)]		
3000	M_B	[Nm]	3.20	6.30	12.0	24.0	44.0 [1)]	57.0 [1)]			
3600	M_B	[Nm]	3.20	6.10	12.0	23.0 [1)]					
Maximum switching energy											
100	Q_E	[KJ]	3.00	7.50	12.0	24.0	30.0	36.0	60.0	80.0	120
1000	Q_E	[KJ]	3.00	7.50	12.0	24.0	30.0	36.0	60.0	80.0	120
1200	Q_E	[KJ]	3.00	7.50	12.0	24.0	30.0	36.0	60.0	80.0	120
1500	Q_E	[KJ]	3.00	7.50	12.0	24.0	30.0	36.0	60.0	24.0 [1)]	36.0 [1)]
1800	Q_E	[KJ]	3.00	7.50	12.0	24.0	30.0	36.0	36.0 [1)]		
3000	Q_E	[KJ]	3.00	7.50	12.0	24.0	18.0 [1)]	11.0 [1)]			
3600	Q_E	[KJ]	3.00	7.50	12.0	7.00 [1)]					
Transition operating frequency											
	$S_{hü}$	[1/h]	79.0	50.0	40.0	30.0	28.0	27.0	20.0	19.0	15.0
Moment of inertia											
	J	[kgcm²]	0.015	0.061	0.20	0.45	0.63	1.50	2.90	7.30	20.0
Mass											
	m	[kg]	0.90	1.50	2.60	4.20	5.80	8.70	12.6	19.5	31.0

[1)] In the region of the load limit the value for friction energy Q_{BW} can be reduced to 40 %.

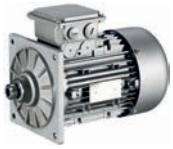

Spring-applied brakes

Rated data with standard braking torque

► Activation via half-wave or bridge rectifier

Size			06	08	10	12	14	16	18	20	25
Friction energy											
	Q_{BW}	[MJ]	85.0	158	264	530	571	966	1542	2322	3522
Delay time											
Engaging	t_{11}	[ms]	15.0		28.0		17.0	27.0	33.0	65.0	110
Rise time											
Braking torque	t_{12}	[ms]	13.0	16.0	19.0	25.0		30.0	45.0	100	120
Engagement time											
	t_1	[ms]	28.0	31.0	47.0	53.0	42.0	57.0	78.0	165	230
Disengagement time											
	t_2	[ms]	45.0	57.0	76.0	115	210	220	270	340	390

► Activation via bridge/half-wave rectifier

Design			Holding current reduction (cold brake)								
Size			06	08	10	12	14	16	18	20	25
Friction energy											
	Q_{BW}	[MJ]	85.0	158	264	530	571	966	1542	2322	3522
Overexcitation time											
	$t_{ü}$	[ms]	300				1300				
Min. rest time											
	t	[ms]	900				3900				
Delay time											
Engaging	t_{11}	[ms]	16.0	25.0	31.0	48.0	33.0	58.0	80.0	102	154
Rise time											
Braking torque	t_{12}	[ms]	14.0	27.0	21.0	43.0	49.0	64.0	109	157	168
Engagement time											
	t_1	[ms]	30.0	52.0		90.0	82.0	122	189	259	322
Disengagement time											
	t_2	[ms]	45.0	57.0	76.0	115	210	220	270	340	390

► The brake response and application times are guide values. The engagement time is 10 times longer with AC-side switching. With the maximum air gap the disengagement time t_2 – depending on the brake and control – is up to 4 times longer than the disengagement time with the rated air gap.

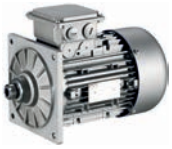

Spring-applied brakes

Rated data with increased braking torque

► Please enquire for braking torques and maximum switching work values not listed here.

Size			10	12	14	16	16	18	20	20	25	25
Power input												
	P_{in}	[kW]	0.030	0.040	0.050	0.055	0.055	0.085	0.10	0.10	0.11	0.11
Braking torque												
100	M_B	[Nm]	23.0	46.0	75.0	100	125	200	315	400	490	600
1000	M_B	[Nm]	20.0	39.0	64.0	83.0	103	162	249	317	376	461
1200	M_B	[Nm]	20.0	39.0	62.0	81.0	101	158	244	309	367	449
1500	M_B	[Nm]	19.0	38.0	60.0	78.0	98.0	153	237 [1]	300 [1]	356 [1]	436 [1]
1800	M_B	[Nm]	19.0	37.0	59.0	77.0	96.0	150 [1]				
3000	M_B	[Nm]	17.0	34.0	55.0 [1]	71.0 [1]	89.0 [1]					
3600	M_B	[Nm]	17.0	33.0 [1]								
Maximum switching energy												
100	Q_E	[KJ]	12.0	24.0	30.0	36.0	36.0	60.0	80.0	80.0	120	120
1000	Q_E	[KJ]	12.0	24.0	30.0	36.0	36.0	60.0	80.0	80.0	120	120
1200	Q_E	[KJ]	12.0	24.0	30.0	36.0	36.0	60.0	80.0	80.0	120	120
1500	Q_E	[KJ]	12.0	24.0	30.0	36.0	36.0	60.0	24.0 [1]	24.0 [1]	36.0 [1]	36.0 [1]
1800	Q_E	[KJ]	12.0	24.0	30.0	36.0	36.0	36.0 [1]				
3000	Q_E	[KJ]	12.0	24.0	18.0 [1]	11.0 [1]	11.0 [1]					
3600	Q_E	[KJ]	12.0	7.00 [1]								
Transition operating frequency												
	$S_{hü}$	[1/h]	40.0	30.0	28.0	27.0	27.0	20.0	19.0	19.0	15.0	15.0
Moment of inertia												
	J	[kgcm²]	0.20	0.45	0.63	1.50	1.50	2.90	7.30	7.30	20.0	20.0
Mass												
	m	[kg]	2.60	4.20	5.80	8.70	8.70	12.6	19.5	19.5	31.0	31.0

[1] In the region of the load limit the value for friction energy Q_{BW} can be reduced to 40 %.

► Activation via half-wave or bridge rectifier

Size			10	12	14	16		18	20		25	
Friction energy												
	Q_{BW}	[MJ]	198	353	253	563	241	578	1596	580	2465	1409
Delay time												
Engaging	t_{11}	[ms]	10.0	16.0	11.0	22.0	17.0	24.0	46.0	17.0	77.0	38.0
Rise time												
Braking torque	t_{12}	[ms]	19.0	25.0		30.0		45.0	100		120	
Engagement time												
	t_1	[ms]	29.0	41.0	36.0	52.0	47.0	69.0	146	117	197	158
Disengagement time												
	t_2	[ms]	109	193	308	297	435	356	378	470	451	532

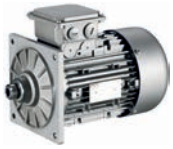

Spring-applied brakes

Rated data with increased braking torque

► Activation via bridge/half-wave rectifier

Design			Holding current reduction (cold brake)									
Size			10	12	14	16		18	20		25	
Friction energy	Q_{BW}	[MJ]	198	353	253	563	241	578	1596	580	2465	1409
Overexcitation time	$t_{ü}$	[ms]	300			1300						
Min. rest time	t	[ms]	900			3900						
Delay time												
Engaging	t_{11}	[ms]	24.0	27.0	17.0	41.0	21.0	60.0	69.0	17.0	123	85.0
Rise time												
Braking torque	t_{12}	[ms]	44.0	43.0	37.0	55.0	37.0	113	148	100	190	270
Engagement time	t_1	[ms]	68.0	70.0	54.0	97.0	57.0	173	217	334	313	355
Disengagement time	t_2	[ms]	109	193	308	297	435	356	378	470	451	532

Design			Over-excitation									
Size			10	12	14	16		18	20		25	
Friction energy	Q_{BW}	[MJ]	264	706	761	966		1542	2322		3522	
Overexcitation time	$t_{ü}$	[ms]	300			1300						
Min. rest time	t	[ms]	900			3900						
Delay time												
Engaging	t_{11}	[ms]	29.0	54.0	31.0	70.0	46.0	86.0	103	55.0	171	135
Rise time												
Braking torque	t_{12}	[ms]	53.0	87.0	68.0	93.0	83.0	160	222	319	266	430
Engagement time	t_1	[ms]	82.0	141	99.0	163	129	246	325	374	437	565
Disengagement time	t_2	[ms]	53.0	81.0	117	141	168	151	160	167	184	204

► The brake response and application times are guide values. The engagement time is 10 times longer with AC-side switching. With the maximum air gap the disengagement time t_2 – depending on the brake and control – is up to 4 times longer than the disengagement time with the rated air gap.

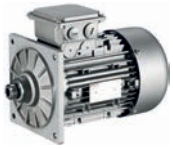

Spring-applied brakes

Manual release lever

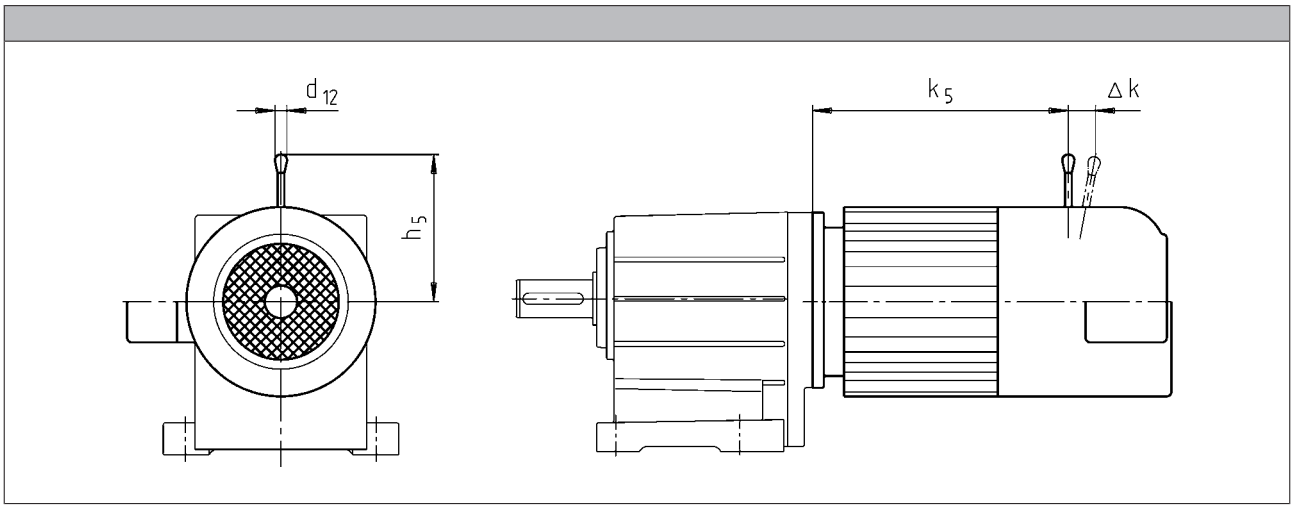

Motor frame size			Size				
			Brake				
				k_5	Δ k	h_5	d_{12}
				[mm]	[mm]	[mm]	[mm]
	063-02 063-22		06	185	29	107	13.0
063-11 063-31	063-12 063-32 063-42		06	173	29	107	13.0
071-11 071-31	071-32 071-42	071-13 071-33	06 08	186 187	29 27	107 116	13.0 13.0
	080-32	080-13 080-33	06 08	207 218	29 27	107 116	13.0 13.0
	090-12 090-32		08 10	245 256	27 28	116 132	13.0 13.0
	100-12		10 12	279 281	28 37	132 161	13.0 13.0
	100-32		10 12	294 296	28 37	132 161	13.0 13.0
	112-22		12 14	292 296	37 41	161 195	13.0 24.0
	132-12 132-22		14 16	373 373	41 55	195 240	24.0 24.0
	160-22		16 18	420 423	59 55	279 240	24.0 24.0
	160-32		16 18	464 467	55 59	240 279	24.0 24.0
	180-12 180-32		18 20	539 546	59 74	279 319	24.0 24.0
	180-42		18 20	596 603	59 74	279 319	24.0 24.0
	225-12 225-22		25 25	785 785	103 103	445 445	24.0 24.0

The following combinations with manual release lever and motor connection in the same position are not possible:
- HAN connector with connection in position 1
- Inverter motec
- Terminal box of motor sizes 071, 080, 090 for brake and retracting (M□□MA BR/BS/BA/BI)

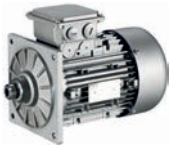

Resolver

Stator-fed resolver with two stator windings offset by 90° and one rotor winding with transformer winding.

► The three-phase AC motors with resolver cannot be used for speed-dependent safety functions in connection with the SM 301 safety module.

Product key				
				RS1
Accuracy				
			[']	-10 ... 10
Absolute positioning				
				1 revolution
Max. input voltage				
DC	$U_{in,max}$		[V]	10.0
Max. input frequency				
	$f_{in,max}$		[kHz]	4.00
Ratio				
Stator / rotor		± 5 %		0.30
Rotor impedance				
	Z_{ro}		[Ω]	51 + j90
Stator impedance				
	Z_{so}		[Ω]	102 + j150
Impedance				
	Z_{rs}		[Ω]	44 + j76
Min. insulation resistance				
At DC 500 V	R		[MΩ]	10.0
Number of pole pairs				
				1

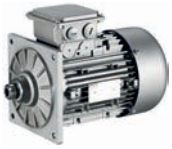

Incremental encoder and SinCos absolute value encoder

► The three-phase AC motors with incremental encoders or SinCos absolute value encoders cannot be used for speed-dependent safety functions in connection with the SM 301 safety module.

Encoder type			HTL incremental				TTL incremental			SinCos absolute value
Product key			IG128-24V-H	IG512-24V-H	IG1024-24V-H	IG2048-24V-H	IG512-5V-T	IG1024-5V-T	IG2048-5V-T	AM1024-8V-H
Encoder type										Multi-turn
Pulses			128	512	1024	2048	512	1024	2048	1024
Output signals			HTL				TTL			1 Vss
Interfaces			A, B track	A, B, N track and inverted						Hiperface
Absolute revolutions			0							4096
Accuracy		[']	-22.5 ... 22.5	-2 ... 2						-0.8 ... 0.8
Min. input voltage										
DC	$U_{in,min}$	[V]	8.00				4.75			7.00
Max. input voltage										
DC	$U_{in,max}$	[V]	26.0	30.0			5.25			12.0
Max. current consumption										
	I_{max}	[A]	0.040	0.15						0.080
Limit frequency										
	f_{max}	[kHz]	30.0	160			300			200
Inverter assignment			E84AVSC E84AVHC	E84AVHC			E84AVTC E94A ECS EVS93			

Inverters
- Inverter Drives 8400 StateLine (E84AVSC)
- Inverter Drives 8400 HighLine (E84AVHC)
- Inverter Drives 8400 TopLine (E84AVTC)

Servo-Inverters
- Servo Drives 9400 (E94A)
- 9300 servo inverters (EVS93)
- Servo Drives ECS



Blowers

► The use of a blower enables operation below 20 Hz without torque derating.

Rated data for 50 Hz

Size	Number of phases	Connection method					
Motor							
			U_{min}	U_{max}	P_{max}	I_{max}	m
			[V]	[V]	[kW]	[A]	[kg]
063	1		230	277	0.027	0.11	2.00
	3	Δ	200	303	0.028	0.12	
		Y	346	525		0.070	
071	1		230	277	0.027	0.10	2.10
	3	Δ	200	303	0.031	0.11	
		Y	346	525		0.060	
080	1		230	277	0.029	0.11	2.30
	3	Δ	200	303	0.031		
		Y	346	525		0.060	
090	1		220	277	0.065	0.29	2.70
	3	Δ	200	303	0.091	0.38	
		Y	346	525		0.22	
100	1		220	277	0.066	0.28	3.00
	3	Δ	200	303	0.091	0.37	
		Y	346	525		0.22	
112	1		220	277	0.071	0.28	3.10
	3	Δ	200	303	0.097	0.35	
		Y	346	525		0.20	
132	1		230	277	0.098	0.40	4.20
	3	Δ	200	303	0.12	0.58	
		Y	346	525		0.33	
160	1		230	277	0.25	0.97	6.20
	3	Δ	200	303		0.87	
		Y	346	525		0.50	
180	1		230	277		0.97	8.00
	3	Δ	200	303		0.87	
		Y	346	525		0.50	

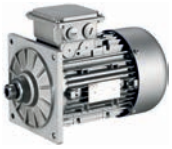

Blowers

Rated data for 50 Hz

Size	Number of phases	Connection method					
Motor							
			U_{min}	U_{max}	P_{max}	I_{max}	m
			[V]	[V]	[kW]	[A]	[kg]
200	1		230	277	0.25	0.97	8.00
	3	Δ	200	303		0.87	
		Y	346	525		0.50	
225		Δ	200	400	0.28	1.10	15.0
		Y	346	525	0.17	0.35	

Rated data for 60 Hz

Size	Number of phases	Connection method					
Motor							
			U_{min}	U_{max}	P_{max}	I_{max}	m
			[V]	[V]	[kW]	[A]	[kg]
063	1		230	277	0.032	0.12	2.00
	3	Δ	220	332	0.028	0.10	
		Y	380	575		0.060	
071	1		230	277	0.033	0.12	2.10
	3	Δ	220	332	0.029	0.10	
		Y	380	575		0.060	
080	1		230	277	0.037	0.14	2.30
	3	Δ	220	332	0.034	0.10	
		Y	380	575		0.060	
090	1		220	277	0.065	0.25	2.70
	3	Δ		332	0.077	0.33	
		Y	380	575		0.19	
100	1		220	277	0.075	0.30	3.00
	3	Δ		332	0.087	0.31	
		Y	380	575		0.18	
112	1		220	277	0.094	0.37	3.10
	3	Δ		332	0.10	0.31	
		Y	380	575		0.18	
132	1		230	277	0.15	0.57	4.20
	3	Δ	220	332		0.44	
		Y	380	575		0.25	
160		Δ	220	332	0.36	0.93	6.20
		Y	380	575		0.56	
180		Δ	220	332		0.93	8.00
		Y	380	575		0.56	
200		Δ	220	332		0.93	
		Y	380	575		0.56	
225		Δ	220	400	0.28	0.76	15.0
		Y	380	575	0.26	0.43	



Temperature monitoring

► The thermal sensors are integrated in the windings. The use of an additional motor protection switch is recommended.

TKO thermal contacts

Function	Operating temperature	Min. reset temperature	Max. reset temperature	Max. input current	Max. input voltage
					AC
	T	T_{min}	T_{max}	$I_{in,max}$	$U_{in,max}$
	-5 ... 5				
	[°C]	[°C]	[°C]	[A]	[V]
NC contact	150	90.0	135	2.50	250

PTC thermistor

Function	Operating temperature	Rated resistance			Standard
		155 °C	-20 °C	140 °C	
	T	R_N	R_N	R_N	
	-5 ... 5				
	[°C]	[Ω]	[Ω]	[Ω]	
Sudden change in resistance	150	550	30.0	250	DIN 44080 DIN VDE 0660 Part 303

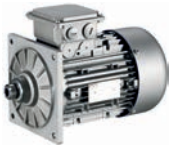

Temperature monitoring

KTY temperature sensor

	Function	Rated resistance			Max. input current	
		25 °C	150 °C	170 °C	25 °C	170 °C
		R_N	R_N	R_N	$I_{in,max}$	$I_{in,max}$
		[Ω]	[Ω]	[Ω]	[A]	[A]
KTY83-110	Continuous resistance change	1000	2225	2471	0.010	0.002
KTY84-130	Continuous resistance change	603	1334	1482	0.010	0.002

Variation of resistance

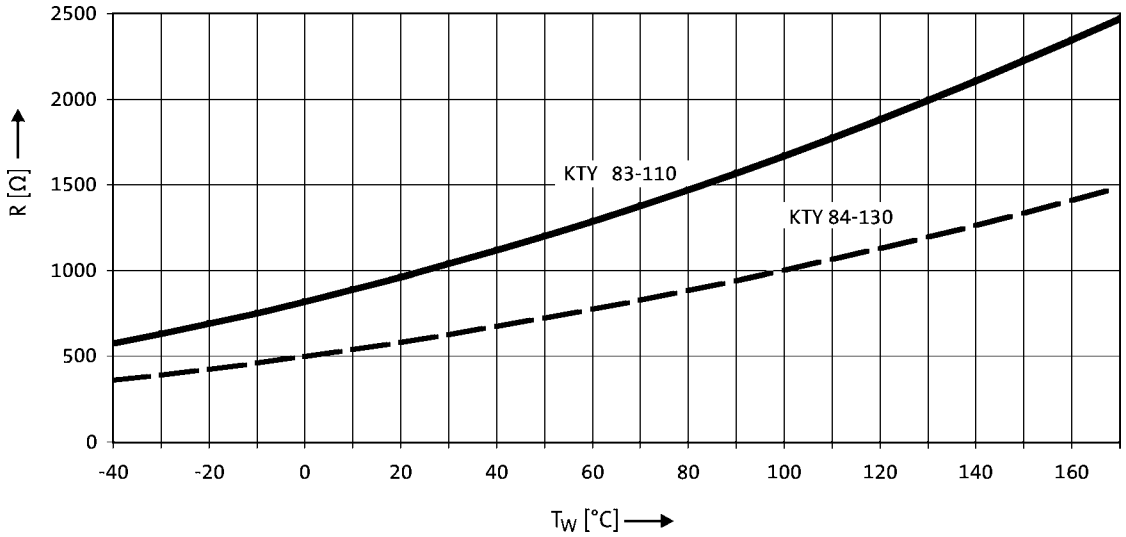

► If the detector is supplied with a measured current of 1 mA, the above relationship between the temperature and the resistance applies.



Terminal box

The three-phase AC motors are designed for operation at a constant mains frequency and with an inverter.
For 50 Hz operation, the motors are operated in Δconfiguration at 230 V or in star configuration at 400 V.
For inverter operation, the base frequency has been specified as 87 Hz at a rated voltage of 400 V in Δconfiguration.

In the standard version, the motors are connected in the terminal box. As an option, the motors are also available with the connectors described on the following pages as long as the permissible ratings are not exceeded.

Motor terminal box - built-on accessories assignment: 4-pole / 6-pole motors

Motor type	M□□MAXX	M□□MARS M□□MAIG M□□MAAG	M□□MAZE M□□MAHA	M□□MALL	M□□MALZ M□□MALH
Motor frame size					
	Terminal box				
063-02 063-22	KK1	KK2			
063-12 063-32 063-42	KK1	KK2			
071-32 071-42 071-13 071-33	KK1	KK2	KK2	KK1	KK1
080-13 080-32 080-33 080-42	KK1	KK2	KK2	KK1	KK1
090-12 090-32	KK1	KK2	KK2	KK1	KK1
100-12 100-32	KK1	KK2	KK2	KK2	KK2
112-22 112-32	KK1	KK2	KK2	KK1	KK1
132-12 132-22 132-32	KK1	KK3	KK3	KK1	KK1
160-22 160-32	KK3	KK3			
180-12 180-32 180-42 180-42	KK3	KK3			
225-12 225-22	KK3	KK3			

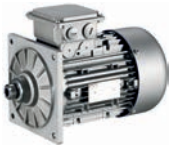

Terminal box

Motor terminal box - built-on accessories assignment: 4-pole / 6-pole motors

Motor type	M□□MABR	M□□MABS M□□MABI M□□MABA	M□□MABZ M□□MABH	M□□MABL
Motor frame size				
	Terminal box			
063-02 063-22	KK2	KK3		
063-12 063-32 063-42	KK2	KK3		
071-32 071-42 071-13 071-33	KK2	KK3	KK2	KK2
080-13 080-32 080-33 080-42	KK2	KK3	KK2	KK2
090-12 090-32	KK2	KK3	KK2	KK2
100-12 100-32	KK2	KK3	KK2	KK2
112-22 112-32	KK2	KK3	KK2	KK2
132-12 132-22 132-32	KK3	KK3	KK3	KK3
160-22 160-32	KK3	KK3		
180-12 180-32 180-42	KK3	KK3		
225-12 225-22	KK3	KK3		

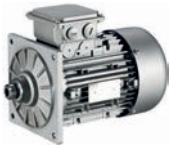

Terminal box

Motor terminal box - built-on accessories assignment: 2-pole motors

Motor type	M□□MAXX	M□□MAZE	M□□MALL	M□□MALZ
Motor frame size				
	Terminal box			
063-11 063-31	KK1			
071-11 071-31	KK1	KK2	KK1	KK2
080-11 080-31	KK1	KK2	KK1	KK2
090-31 090-11	KK1	KK2	KK1	KK2
100-31 100-41	KK1	KK2	KK1	KK2
112-31 112-41	KK1	KK2	KK1	KK2
132-21	KK1	KK3	KK1	KK3

Motor type	MD□MABR	MD□MABZ	MD□MABL
Motor frame size			
	Terminal box		
063-11 063-31	KK2		
071-11 071-31	KK2	KK2	
080-11 080-31	KK2	KK2	KK2
090-31 090-11	KK2	KK2	KK2
100-31 100-41	KK2	KK2	KK2
112-31 112-41	KK2	KK2	KK2
132-21	KK3	KK3	KK3

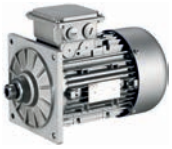

Terminal box

Dimensions of KK1

- For motors with motor terminal box KK1, the connector position can be selected in accordance with the terminal box position.
- If preferred positions are not specified in the order, the cable entry will be positioned as circled on the diagram below.

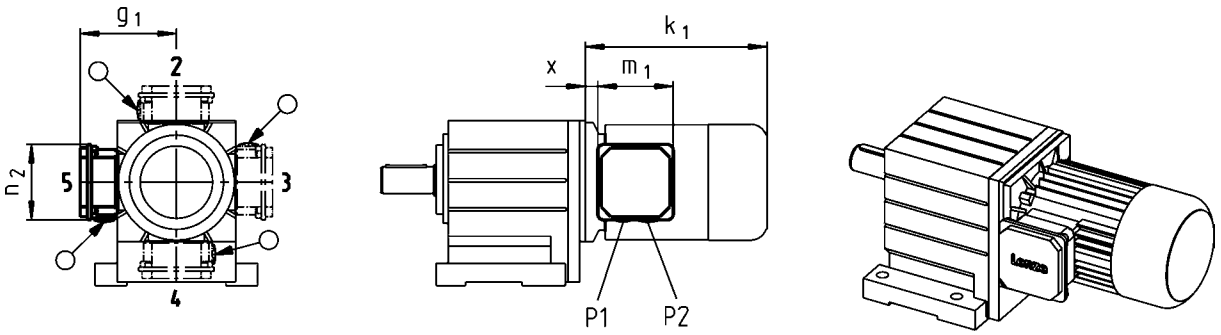

Size						
Motor						
	x	g_1	m_1	n_2	P_1	P_2
	[mm]	[mm]	[mm]	[mm]	[mm]	[mm]
063	21 12 [1)]	100 117 [1)]	75.0 93.0 [1)]	75.0 93.0 [1)]	M16x1.5 M20x1.5 [1)]	M20x1.5 M20x1.5
071	24 15 [1)]	109 126 [1)]				
080	14	150	115	115	M20x1.5	M25x1.5
090	19	157				
100	20	166				
112	22	176				
132	33	195	122	122	M32x1.5	M32x1.5

[1)] UL/CSA approval: cURus

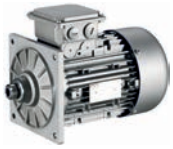

Terminal box

Cable entry position when using KK1

Terminal box in position 2

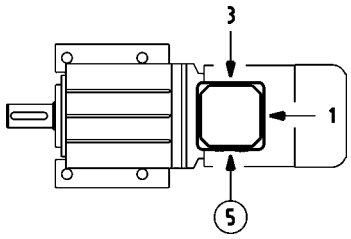

Terminal box in position 3

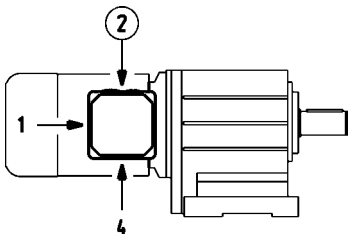

Terminal box in position 4

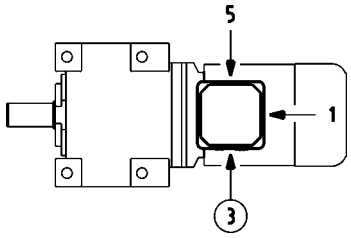

Terminal box in position 5

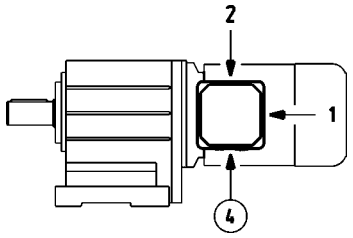

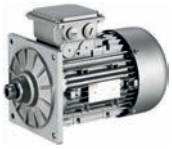

Terminal box

Dimensions of KK2

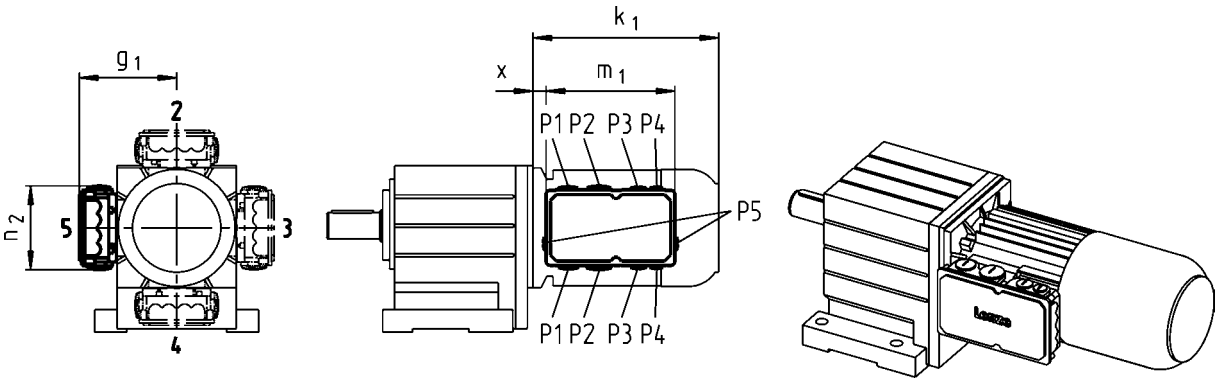

Size						
Motor						
	x	g_1	m_1	n_2	P_1	P_2
	[mm]	[mm]	[mm]	[mm]	[mm]	[mm]
063	13	107	136	103	M16x1.5	M20x1.5
071	15	118				
080	17	132	152	121	M20x1.5	M25x1.5
090	22	137				
100	23	147				
112	25	158				



Terminal box

Dimensions of KK3

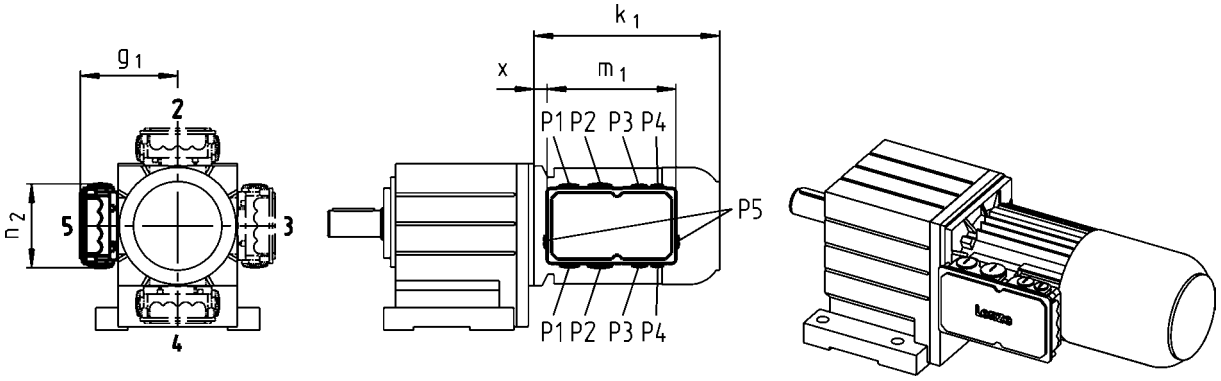

Size									
Motor									
	x	g_1	m_1	n_2	P_1	P_2	P_3	P_4	P_5
	[mm]	[mm]	[mm]	[mm]	[mm]	[mm]	[mm]	[mm]	[mm]
063	2	124	195	125	M25x1.5	M32x1.5	M20x1.5	M20x1.5	
071	5	133							
080	15	142							
090	20	147							
100	21	158							
112	23	168							
132	38	187							
160	35	210	226	127	M50x1.5	M16x1.5		M16x1.5	
180	73	230							
225	95	346	354	205		M63x1.5 [1)]	M50x1.5 [1)]		M16x1.5

[1)] Cable entry only possible at one position.
Terminal box position 2: cable entry at position 5.
Terminal box position 3: cable entry at position 2.
Terminal box position 4: cable entry at position 3.
Terminal box position 5: cable entry at position 4.

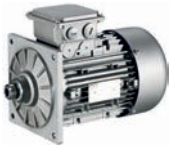

Plug connectors

ICN, HAN and M12 connectors (only for IG128-24V-H incremental encoder) are available for the three-phase AC motors.

ICN connector

A connector is used for power, brake and temperature monitoring. The connections to the feedback system and the blower each employ a separate connector.

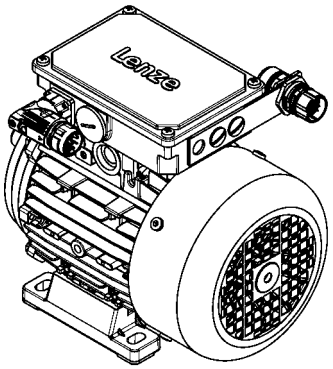

Connection for power, brake and temperature monitoring

The connectors can be rotated through 270° and are fitted with a bayonet catch for SpeedTec connectors. As this connector is also compatible with conventional union nuts, existing mating connectors can continue to be used without difficulty. The motor connection is determined in the terminal box and must be checked before commissioning.

► ICN 6-pole

Pin assignment			
Contact	Designation	Meaning	
1	BD1 / BA1	Brake +/AC	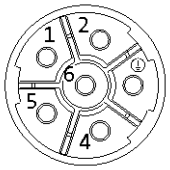
2	BD2 / BA2	Brake /AC	
PE	PE	PE conductor	
4	U	Phase U power	
5	V	Phase V power	
6	W	Phase W power	

► ICN 8-pole

Pin assignment			
Contact	Designation	Meaning	
1	U	Phase U power	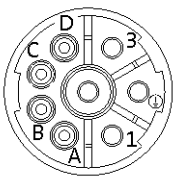
PE	PE	PE conductor	
3	V	Phase V power	
4	W	Phase W power	
A	TB1 / TP1 / R1	Thermal sensor: TKO/PTC/ +KTY	
B	TB2 / TP2 / R2	Thermal sensor: TKO/PTC/-KTY	
C	BD1 / BA1	Brake +/AC	
D	BD2 / BA2	Brake /AC	

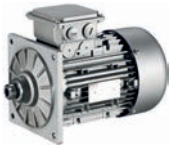

ICN connector

Feedback connection

All encoder systems (apart from IG128-24V-H) are also available with an ICN connector fixed to the motor terminal box for exceptionally fast commissioning. The connectors are fitted with a bayonet fixing, which is also compatible with conventional union nuts. Existing mating connectors can therefore continue to be used without difficulty.

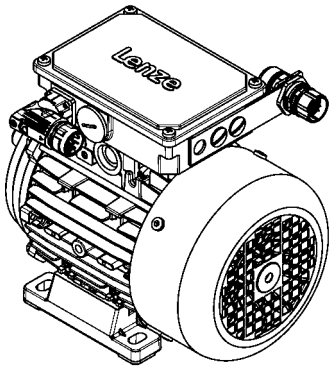

► Resolver

Pin assignment			
Contact	Designation	Meaning	
1	+Ref	Transformer windings	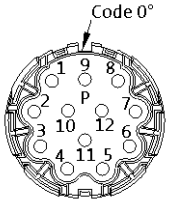
2	-Ref		
3	+VCC ETS	Supply: Electronic nameplate	
4	+COS	Cosine stator windings	
5	-COS		
6	+SIN	Sine stator windings	
7	-SIN		
8		Not assigned	
9			
10			
11	+KTY	KTY temperature sensor	
12	-KTY		

► Hiperface incremental encoder and SinCos absolute value encoder

Pin assignment			
Contact	Designation	Meaning	
1	B	Track B/+SIN	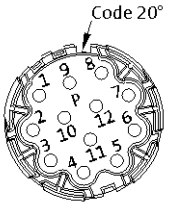
2	A^-	Track A inverse/-COS	
3	A	Track A/+COS	
4	$+U_B$	Supply +	
5	GND	Mass	
6	Z^-	Zero track inverse/-RS485	
7	Z	Zero track/+RS485	
8		Not assigned	
9	B^-	Track B inverse/-SIN	
10		Not assigned	
11	+KTY	KTY temperature sensor	
12	-KTY		

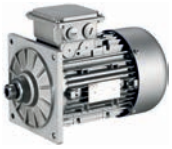

ICN connector

Motor terminal box with ICN connectors - built-on accessories assignment: 2-pole motors

Motor type	M□□MAXX	M□□MAZE	M□□MALL	M□□MALZ
Motor frame size				
	Terminal box with ICN connector			
063-11 063-31	KK1			
071-11 071-31	KK1	KK2	KK1	KK2
080-11 080-31	KK1	KK2	KK1	KK2
090-31 090-11	KK1	KK2	KK1	KK2
100-31 100-41	KK1	KK2	KK1	KK2
112-31 112-41	KK1	KK2	KK1	KK2
132-21	KK1	KK3	KK1	KK3

Motor type	M□□MABR	M□□MABZ	M□□MABL
Motor frame size			
	Terminal box with ICN connector		
063-11 063-31	KK2		
071-11 071-31	KK2	KK2	
080-11 080-31	KK2	KK2	KK2
090-31 090-11	KK2	KK2	KK2
100-31 100-41	KK2	KK2	KK2
112-31 112-41	KK2	KK2	KK2
132-21	KK3	KK3	KK3

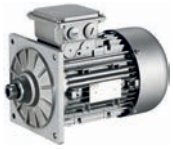

ICN connector

Motor terminal box with ICN connectors - built-on accessories assignment: 4-pole / 6-pole motors

Motor type	M□□MAXX	M□□MARS M□□MAIG M□□MAAG	M□□MAZE M□□MAHA	M□□MALL	M□□MALZ M□□MALH
Motor frame size	Terminal box with ICN connector				
063-02 063-22	KK1	KK2			
063-12 063-32 063-42	KK1	KK2			
071-32 071-42 071-13 071-33	KK1	KK2	KK2	KK1	KK1
080-13 080-32 080-33 080-42	KK1	KK2	KK2	KK1	KK1
090-12 090-32	KK1	KK2	KK2	KK1	KK1
100-12 100-32	KK1	KK2	KK2	KK2	KK2
112-22 112-32	KK1	KK2	KK2	KK1	KK1
132-12 132-22 132-32	KK1	KK3	KK3	KK1	KK1

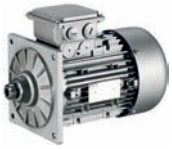

ICN connector

Motor terminal box with ICN connectors - built-on accessories assignment: 4-pole / 6-pole motors

Motor type	M□□MABR	M□□MABS M□□MABI M□□MABA	M□□MABZ M□□MABH	M□□MABL
Motor frame size	Terminal box with ICN connector			
063-02 063-22	KK2	KK2		
063-12 063-32 063-42	KK2	KK2		
071-32 071-42 071-13 071-33	KK2	KK2	KK2	KK2
080-13 080-32 080-33 080-42	KK2	KK2	KK2	KK2
090-12 090-32	KK2	KK2	KK2	KK2
100-12 100-32	KK2	KK2	KK2	KK2
112-22 112-32	KK2	KK2	KK2	KK2
132-12 132-22 132-32	KK3	KK3	KK3	KK3



ICN connector

Dimensions of KK1

- For motors with connectors, the connector position can be selected in accordance with the terminal box position.
- If preferred positions are not specified in the order, the connector will be positioned as circled on the diagram below.

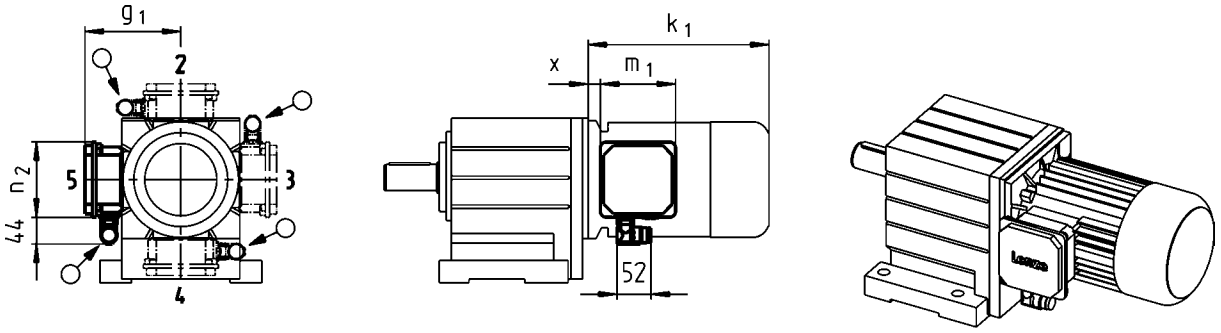

Size				
Motor				
	x	g_1	m_1	n_2
	[mm]	[mm]	[mm]	[mm]
063	12	117	93.0	93.0
071	15	126		
080	14	150	115	115
090	19	157		
100	20	166		
112	22	176		
132	33	195	122	122

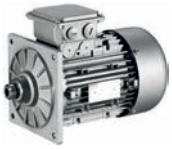

ICN connector

Connector position when using KK1

Terminal box in position 2

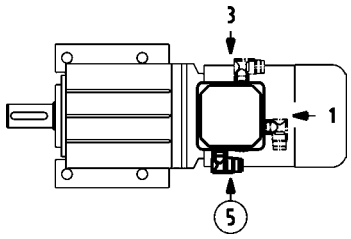

Terminal box in position 3

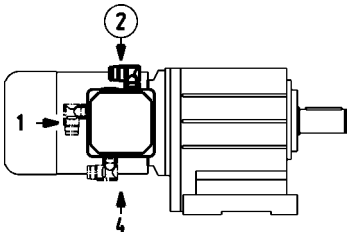

Terminal box in position 4

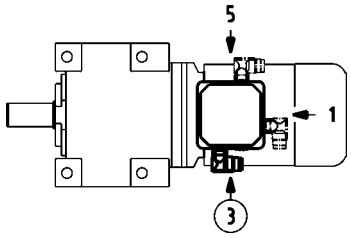

Terminal box in position 5

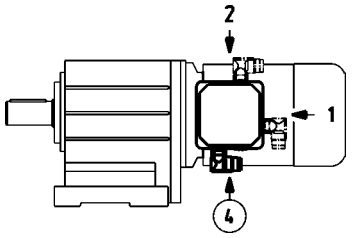



ICN connector

Dimensions of KK2/KK3

- For motors with connectors, the connector position can be selected in accordance with the terminal box position.
- If preferred positions are not specified in the order, the connector will be positioned as circled on the diagram below.

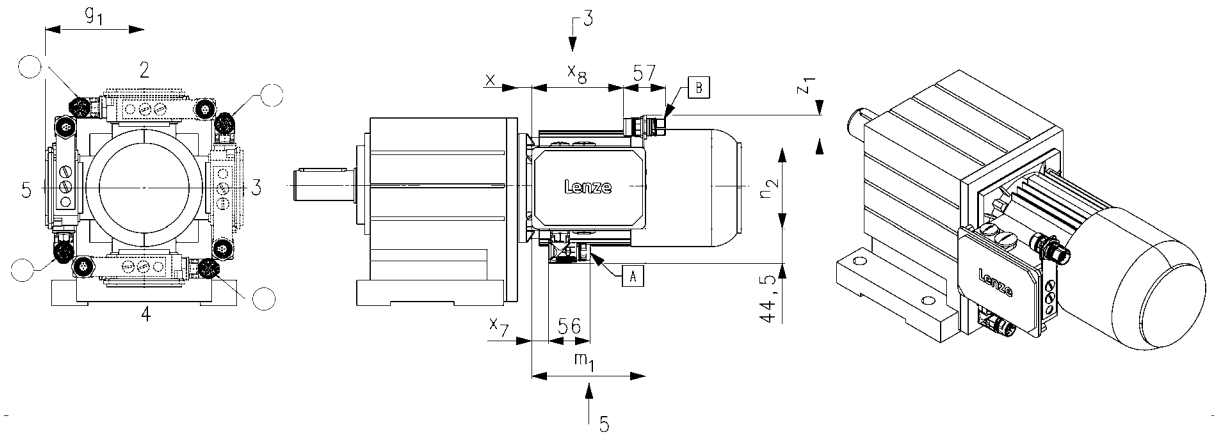

Size							
Motor							
	x	g_1	m_1	n_2	x_7	x_8	$z_{1, max}$
	[mm]	[mm]	[mm]	[mm]	[mm]	[mm]	[mm]
063	13	107	136	103	16	109	43
071	15	118					
080	17	132	152	121	23	125	41
090	22	137					
100	23	147					
112	25	158					
132	38	187	195	125	27	166	71

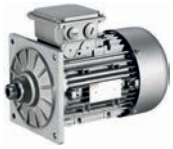

ICN connector

Connector position when using KK2/KK3

Terminal box in position 2

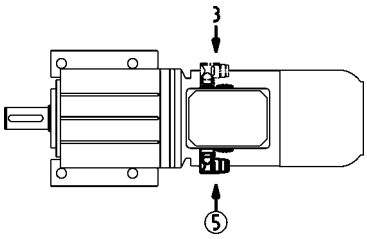

Terminal box in position 3

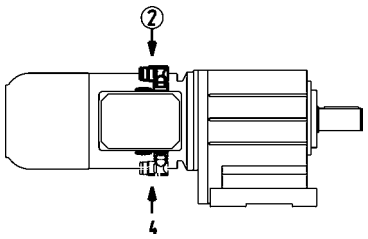

Terminal box in position 4

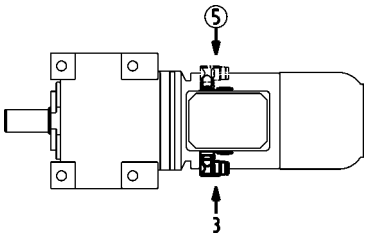

Terminal box in position 5

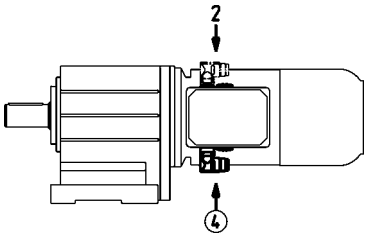

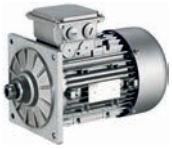

ICN connector

Blower connection

The blower is also optionally available with an ICN connector fixed to the terminal box of the blower for exceptionally fast commissioning. The connectors are fitted with a bayonet fixing, which is also compatible with conventional union nuts. Existing counter plugs can therefore continue to be used without difficulty.

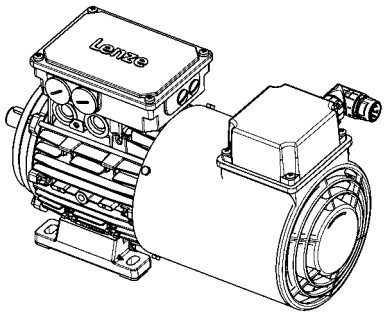

► Blower 1-ph

Pin assignment			
Contact	Designation	Meaning	
PE	PE	PE conductor	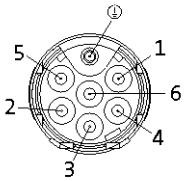
1	U1	Fan	
2	U2		
3		Not assigned	
4			
5			
6			

► Blower 3-ph

Pin assignment			
Contact	Designation	Meaning	
PE	PE	PE conductor	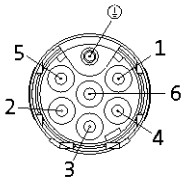
1	U	Phase U power	
2		Not assigned	
3	V	Phase V power	
4		Not assigned	
5			
6	W	Phase W power	

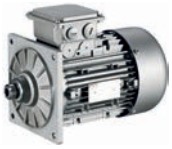

ICN connector

Dimensions of blower

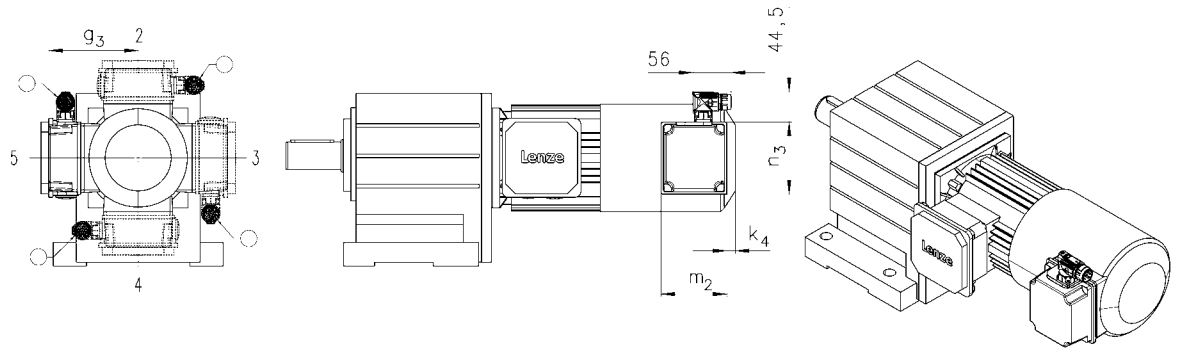

Size				
Motor				
	k_4	g_3	m_2	n_3
	[mm]	[mm]	[mm]	[mm]
063	12	115	95	105
071		122		
080	13	132	96	106
090	22	141	95	105
100		150		
112		162		
132	32	182		
160	31	209	96	106
180				
225				

► In addition, the cover of the blower terminal box (including connectors) can be rotated progressively through 90° if necessary.

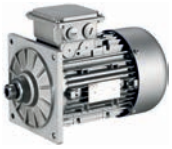

M12 connector

IG128-24V-H incremental encoder connection

As a standard this incremental encoder is equipped with a connection cable of about 0.5 m length and with a common industry standard M12 connector at its end.

Pin assignment			
Contact	Designation	Meaning	
1	$+U_B$	Supply +	
2	B	Track B	
3	GND	Mass	
4	A	Track A	

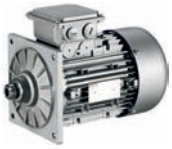

HAN connector

10E

In the case of the rectangular HAN-10E connectors, all six ends of the three winding phases are taken out to the power contacts. The motor circuit is therefore determined in the mating connector.

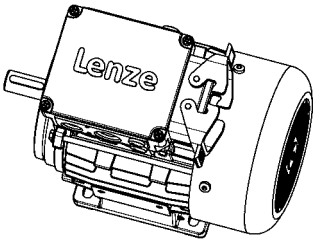

Pin assignment	
Contact	Meaning
1	Terminal board: U1
2	Terminal board: V1
3	Terminal board: W1
4	Brake +/AC
5	Brake -/AC
6	Terminal board: W2
7	Terminal board: U2
8	Terminal board: V2
9	Thermal sensor: +KTY/PTC/TKO
10	Thermal sensor: KTY/PTC/TKO

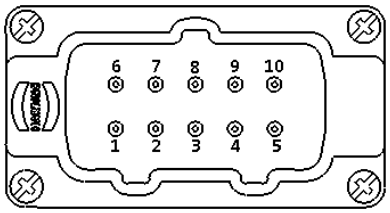

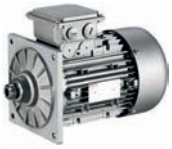

HAN connector

Modular

The connector is available with two different power modules (16 A or 40 A), depending on the rated motor current. The motor connection is determined in the terminal box and must be checked before commissioning.

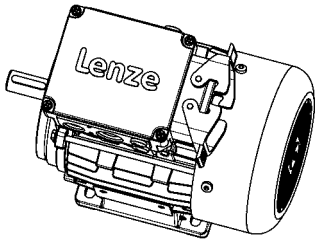

► HAN modular 16 A

Pin assignment			
Module	Contact	Meaning	
A	1	Terminal board: U1	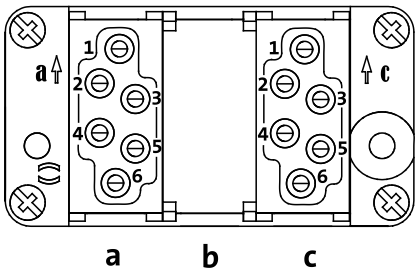
	2	Terminal board: V1	
	3	Terminal board: W1	
B		Dummy module	
C	1	Thermal sensor: +KTY/PTC/TKO	
	2	Brake +/AC	
	3	Brake -/AC	
	4	Rectifier: Switching contact	
	5		
	6	Thermal sensor: KTY/PTC/TKO	

► HAN modular 40 A

Pin assignment			
Module	Contact	Meaning	
A	1	Terminal board: U1	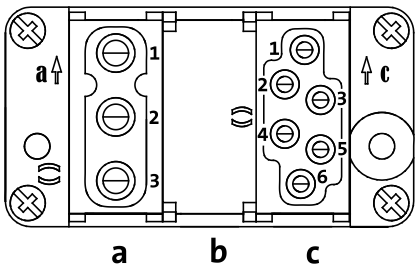
	2	Terminal board: V1	
	3	Terminal board: W1	
B		Dummy module	
C	1	Thermal sensor: +KTY/PTC/TKO	
	2	Brake +/AC	
	3	Brake -/AC	
	4	Rectifier: Switching contact	
	5		
	6	Thermal sensor: KTY/PTC/TKO	

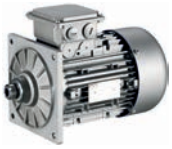

HAN connector

Motor terminal box with HAN connectors - built-on accessories assignment: 2-pole motors

Motor type	M□□MAXX M□□MABR	M□□MAZE M□□MABZ	M□□MALL M□□MABL	M□□MALZ
Motor frame size				
	Terminal box with HAN connector			
063-11 063-31	HAN-10E HAN modular			
071-11 071-31	HAN-10E HAN modular	HAN-10E HAN modular	HAN-10E HAN modular	HAN-10E HAN modular
080-11 080-31	HAN-10E HAN modular	HAN-10E HAN modular	HAN-10E HAN modular	HAN-10E HAN modular
090-31 090-11	HAN-10E HAN modular	HAN-10E HAN modular	HAN-10E HAN modular	HAN-10E HAN modular
100-31 100-41	HAN-10E HAN modular	HAN-10E HAN modular	HAN-10E HAN modular	HAN-10E HAN modular
112-31 112-41	HAN-10E HAN modular	HAN-10E HAN modular	HAN-10E HAN modular	HAN-10E HAN modular
132-21	HAN modular	HAN modular	HAN modular	HAN modular



HAN connector

Motor terminal box with HAN connectors - built-on accessories assignment: 4-pole / 6-pole motors

Motor type	M□□MAXX M□□MABR	M□□MAZE M□□MAHA M□□MABZ M□□MABH	M□□MALL M□□MABL	M□□MALZ M□□MALH
Motor frame size				
	Terminal box with HAN connector			
063-02 063-22	HAN-10E HAN modular			
063-12 063-32 063-42	HAN-10E HAN modular			
071-32 071-42 071-13 071-33	HAN-10E HAN modular	HAN-10E HAN modular	HAN-10E HAN modular	HAN-10E HAN modular
080-13 080-32 080-33 080-42	HAN-10E HAN modular	HAN-10E HAN modular	HAN-10E HAN modular	HAN-10E HAN modular
090-12 090-32	HAN-10E HAN modular	HAN-10E HAN modular	HAN-10E HAN modular	HAN-10E HAN modular
100-12 100-32	HAN-10E HAN modular	HAN-10E HAN modular	HAN-10E HAN modular	HAN-10E HAN modular
112-22 112-32	HAN-10E HAN modular	HAN-10E HAN modular	HAN-10E HAN modular	HAN-10E HAN modular
132-12 132-22 132-32	HAN modular	HAN modular	HAN modular	HAN modular
160-22 160-32	HAN modular			

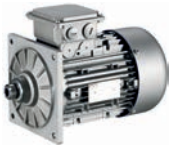

HAN connector

Dimensions

- For motors with connectors, the connector position can be selected in accordance with the terminal box position.
- Unless the connector position is specified, it will be supplied in position 1.

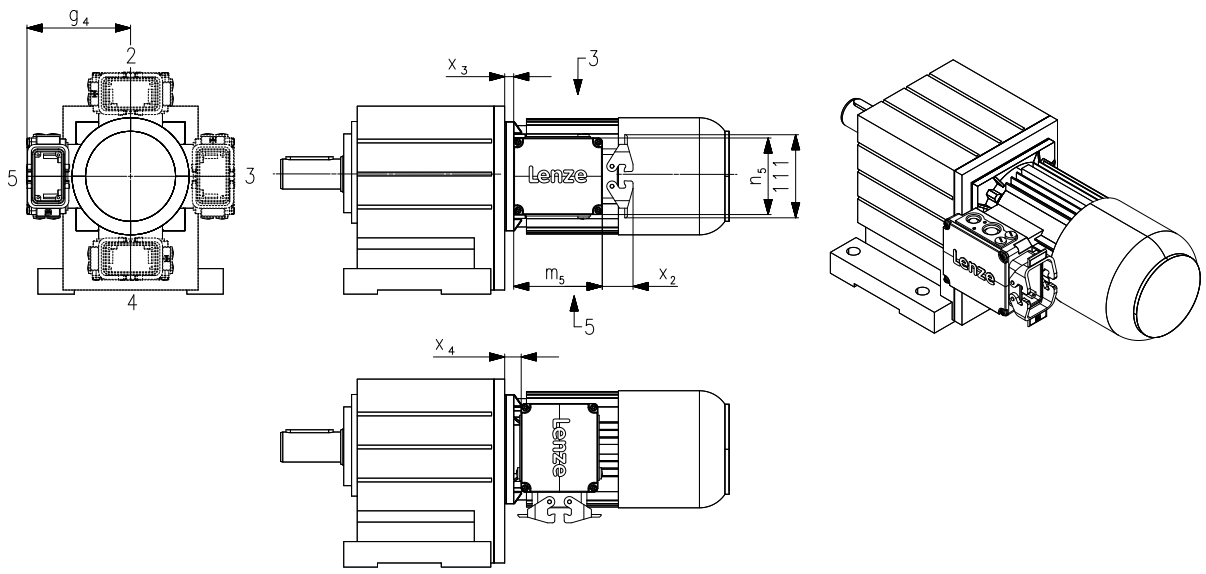

Size			
Motor			
	g_4	x_3	x_4
	[mm]	[mm]	[mm]
063	120	5.00	6.00
071	129	7.00	8.00
080	138	11.0	19.0
090	143	15.0	23.0
100	154	16.0	24.0
112	164	13.5	21.5
132	233	34.5	4.50
160	248	39.0	9.00

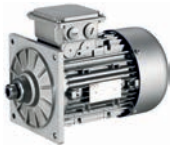

HAN connector

Position of connector

Connector in position 2	Connector in position 3
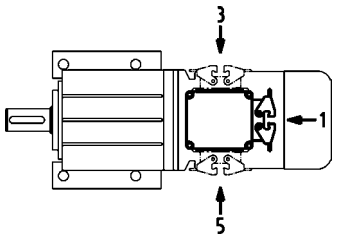	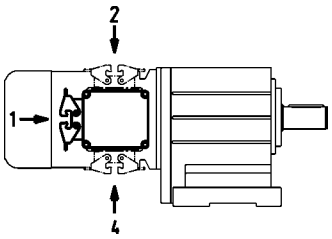

Connector in position 4	Connector in position 5
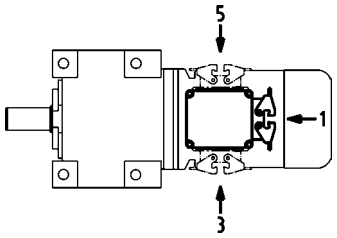	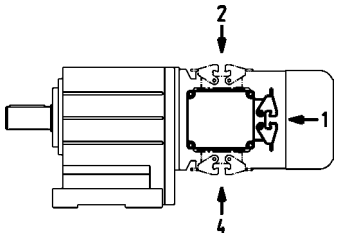

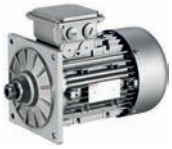

Handwheel

Design	Handwheel made from alloy, smooth wheel surface
Function	Manual operation: • Emergency operation • Setting-up operation for machines/systems
Note	The increased moment of inertia must be taken into account during project planning! For frequent switching operations, in particular if the direction of rotation changes: Please contact Lenze.

Size	Moment of inertia	Mass
Motor	Additional	Additional
	J	m
	[kgcm²]	[kg]
071	16.0	0.60
080	16.0	0.60
090	16.0	0.60
100	16.0	0.60
112	16.0	0.60
132	139	1.80



Handwheel

Dimensions, self-ventilated (4/6-pole)

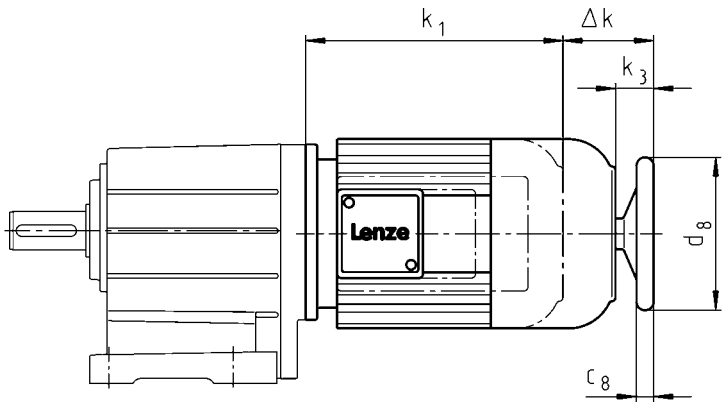

Motor type	
Built-on accessories	M□□MAHA M□□MABH M□□MALH

Motor frame size				
	Δ k	k_3	c_8	d_8
	[mm]	[mm]	[mm]	[mm]
071-32 071-42 071-13 071-33	70	34.0	18.0	160
080-32 080-42 080-13 080-33	91	34.0	18.0	160
090-12 090-32	80	32.0	18.0	160
100-12 100-32	94	42.0	18.0	160
112-22 112-32	107	39.0	18.0	160
132-12 132-22 132-32	126	50.0	26.0	250

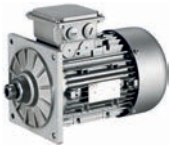

Centrifugal mass

Note	The increased moment of inertia must be taken into account during project planning! For frequent switching operations, in particular if the direction of rotation changes: Please contact Lenze.
Function	Increased motor centrifugal mass for smooth starting/braking
Design	Integral fan made from cast iron

	Moment of inertia	**Mass**
Motor frame size	Additional	Additional
	J	m
	[kgcm²]	[kg]
071	18.0	1.20
080	29.0	1.40
090-□1	83.0	2.80
090-□2	55.0	2.00
100	77.0	2.50
112	153	3.80
132	356	6.00



2nd shaft end

Dimensions, self-ventilated (2-pole)

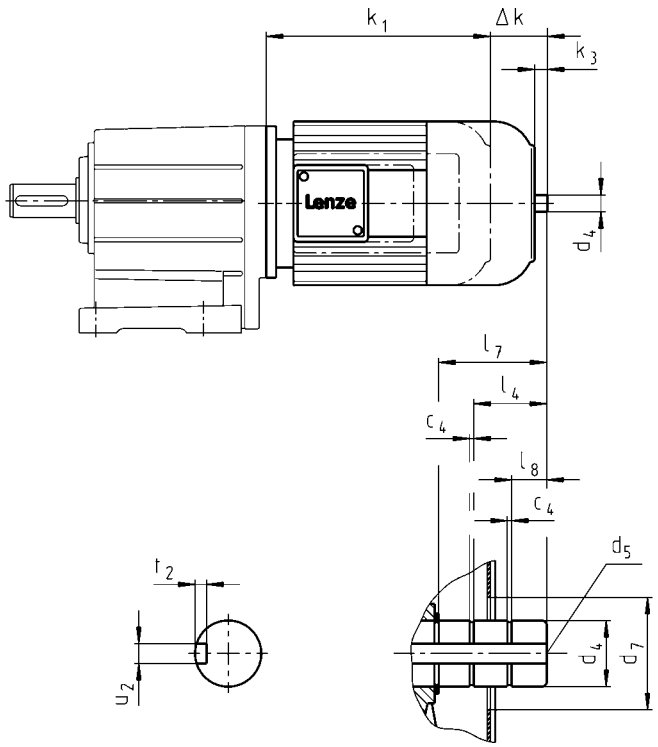

Motor type	
Built-on accessories	M□□MAZE M□□MABZ M□□MALZ

Motor frame size												
	Δ k	k_3	c_4	d_4	d_4	d_5	d_7 [1]	l_4	l_7	l_8	u_2	t_2
				h6	j6							
	[mm]	[mm]	[mm]	[mm]	[mm]	[mm]	[mm]	[mm]	[mm]	[mm]	[mm]	[mm]
071-11 071-31	47	11.0	1.10	14.0		M5	34.0		19.0	3.00	5.00	3.00
080-11 080-31	68	9.00	1.30	19.0		M6	34.0		19.0	4.50	6.00	3.20
090-11 090-31	57	9.00	1.30		20.0	M6	34.0		19.5	5.50	6.00	3.50
100-31 100-41	71	18.5	1.30		25.0	M10	34.0	17.0	32.5	10.5	8.00	4.00
112-31 112-41	84	16.0	1.30		25.0	M10	34.0	17.0	28.5	7.00	8.00	4.00
132-21	101	24.5	1.60		30.0	M10	48.0	24.5	42.0	8.50	8.00	4.00

[1] During operation, appropriate measures must be taken to make fan cover opening safe.



2nd shaft end

Dimensions, self-ventilated (4/6-pole)

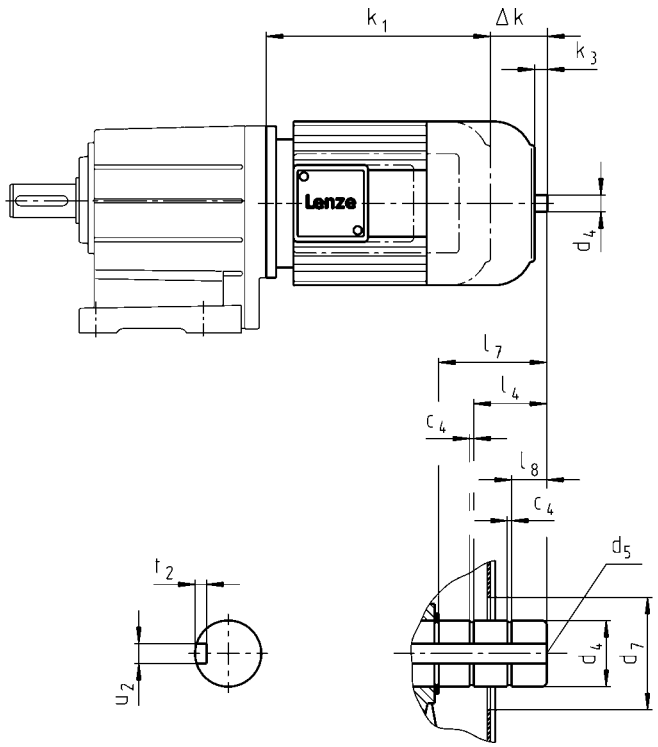

Motor type	
Built-on accessories	M□□MAZE M□□MABZ M□□MALZ

Motor frame size												
	Δk	k_3	c_4	d_4	d_4	d_5	d_7 [1]	l_4	l_7	l_8	u_2	t_2
				h6	j6							
	[mm]	[mm]	[mm]	[mm]	[mm]	[mm]	[mm]	[mm]	[mm]	[mm]	[mm]	[mm]
071-32 071-42 071-13 071-33	47	11.0	1.10	14.0		M5	34.0		19.0	3.00	5.00	3.00
080-32 080-42 080-13 080-33	68	9.00	1.10	14.0		M5	34.0		19.0	4.50	5.00	3.00
090-12 090-32	57	9.00	1.10	14.0		M5	34.0		19.0	5.00	5.00	3.00
100-12 100-32	71	18.5	1.30		20.0	M6	34.0	17.0	32.5	10.5	6.00	3.50
112-22 112-32	84	16.0	1.30		20.0	M6	34.0	17.0	28.5	7.00	6.00	3.50
132-12 132-22 132-32	101	24.5	1.60		30.0	M10	46.0	24.5	42.0	8.50	8.00	4.00

[1] During operation, appropriate measures must be taken to make fan cover opening safe.



Protection cover

Dimensions, self-ventilated (2-pole)

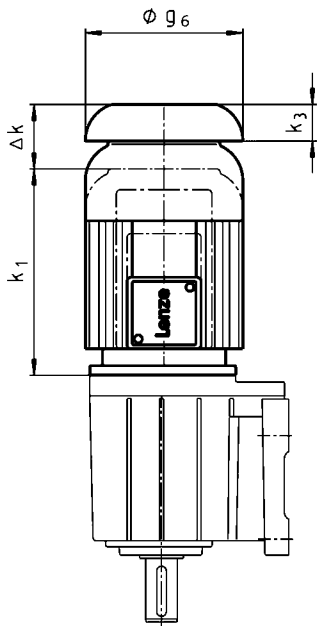

	Motor type					
	M□□MAXX	M□□MABR	M□□MABL	M□□MALL		

Motor frame size						
	Δ k	Δ k	Δ k	Δ k	k_3	g_6
	[mm]	[mm]	[mm]	[mm]	[mm]	[mm]
063-11 063-31	26	66			11.0	123
071-11 071-31	26	78	78	26	12.0	138
080-11 080-31	26	99	99	30	16.0	156
090-11 090-31	26	94	94	26	15.0	176
100-31 100-41	31	107	107	107	17.0	194
112-31 112-41	31	121	121	31	18.0	218
132-21	31	141	141	31	20.0	257



Protection cover

Dimensions, self-ventilated (4/6-pole)

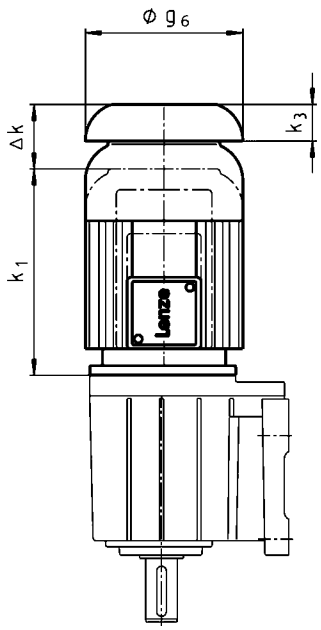

	Motor type							
	M□□MAXX	M□□MABR	M□□MABS M□□MABI M□□MABA	M□□MABL	M□□MARS M□□MAIG M□□MAAG	M□□MALL		

Motor frame size								
	Δ k	Δ k	Δ k	Δ k	Δ k	Δ k	k_3	g_6
	[mm]	[mm]	[mm]	[mm]	[mm]	[mm]	[mm]	[mm]
063-02 063-22		97	160		97		11.0	123
063-12 063-32 063-42	26	66	129		82		11.0	123
071-32 071-42 071-13 071-33	26	78	122	78	78	26	12.0	138
080-32 080-42 080-13 080-33	26	99	137	99	127	30	16.0	156
090-12 090-32	26	94	131	94	113	26	15.0	176
100-12 100-32	31	107	132	107	112	107	17.0	194
112-22 112-32	31	121	151	121	111	31	18.0	218
132-12 132-22 132-32	31	141	156	141	134	31	20.0	257
160-22 160-32	37	142	228		120		25.0	310



Protection cover

Dimensions, forced ventilated (2-pole)

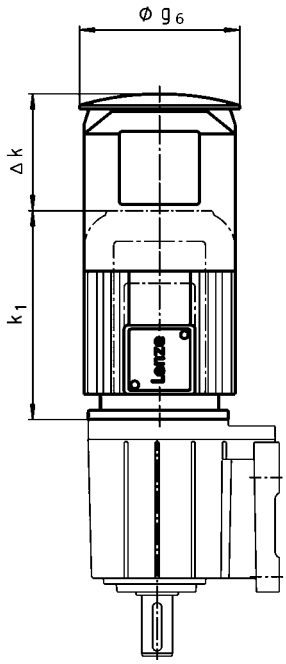

	Motor type		
	M□□MAXX	M□□MABR	

Motor frame size			
	Δ k	Δ k	g_6
	[mm]	[mm]	[mm]
063-11 063-31	169	209	133
071-11 071-31	165	202	150
080-11 080-31	168	224	170
090-11 090-31	157		
100-31 100-41	137	198	210
112-31 112-41	135	216	249
132-21	140	226	300

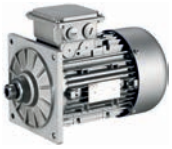

Protection cover

Dimensions, forced ventilated (4/6-pole)

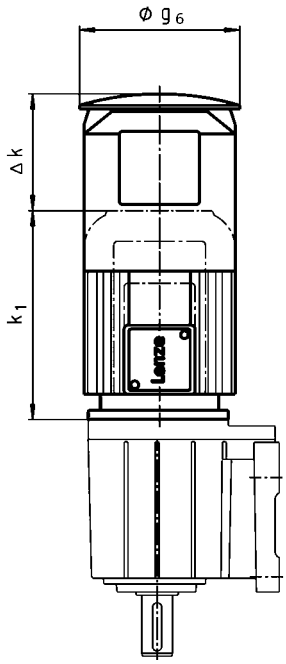

	Motor type			
	M□□MAXX	M□□MABR M□□MABS M□□MABI M□□MABA	M□□MARS M□□MAIG M□□MAAG	

Motor frame size				
	Δ k	Δ k	Δ k	g_6
	[mm]	[mm]	[mm]	[mm]
063-12 063-32 063-42	169	209	209	133
071-32 071-42 071-13 071-33	165	202	202	150
080-32 080-42 080-13 080-33	168	224	224	170
090-12 090-32	157	210	210	188
100-12 100-32	137	198	198	210
112-22 112-32	135	216	216	249
132-12 132-22 132-32	140	226	226	300
160-22 160-32	155	267	267	338

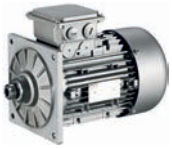

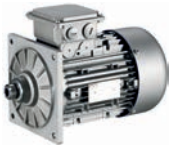

13449897

Lenze SE
Hans-Lenze-Straße 1
D-31855 Aerzen
Phone: +49 (0)5154 82-0
Telefax: +49 (0)5154 82 28 00

www.Lenze.com