L-force catalogue

Automation systems
Drive solutions

Controls
Inverters
Motors
Gearboxes
Engineering Tools

Motors: MF three-phase AC motors

Gearboxes: g500-H helical gearbox, g500-S shaft-mounted helical gearbox, g500-B bevel gearbox

Lenze
As easy as that.

Contents of the L-force catalogue

About Lenze		Lenze makes many things easy for you.	
		A matter of principle: the right products for every application.	
		L-force product portfolio	
Automation systems		Controller-based Automation	1.1
		Drive-based automation	1.2
Drive solutions		HighLine tasks	2.1
		StateLine tasks	2.2
		BaseLine tasks	2.3
Controls	Cabinet Controller	Controller 3200 C	3.1
		Controller c300	3.2
	Panel Controller	Controller p500	3.3
		Controller p300	3.4
	'	I/O system 1000	3.5
		Monitor Panel	3.6
Inverters	Decentralised	Inverter Drives 8400 protec	4.1
		Inverter Drives 8400 motec	4.2
	Cabinet	Servo Drives 9400 HighLine	4.4
		Inverter Drives 8400 TopLine	4.5
		Servo Inverters i700	4.6
		Inverter Drives 8400 HighLine	4.7
		Inverter Drives 8400 StateLine	4.8
		Inverter Drives 8400 BaseLine	4.10
Motors	Servo motors	MCS synchronous servo motors	5.1
		MD□KS synchronous servo motors	5.2
		MQA asynchronous servo motors	5.3
		MCA asynchronous servo motors	5.4
	Three-phase AC motors	MF three-phase AC motors	5.5
		MH three-phase AC motors	5.6
		MD three-phase AC motors	5.7
		m300 Lenze Smart Motor	5.8
		MD/MH basic three-phase AC motors	5.9
Gearboxes	Axial gearbox	g700-P planetary gearbox	6.1
		MPR/MPG planetary gearboxes	6.2
		g500-H helical gearbox	6.3
		GST helical gearboxes	6.4
		g500-S shaft-mounted helical gearbox	6.5
		GFL shaft-mounted helical gearboxes	6.6
	Right-angle gearbox	g500-B bevel gearbox	6.7
		GKR bevel gearboxes	6.8
		GKS helical-bevel gearboxes	6.9
		GSS helical-worm gearboxes	6.10
	Motor data	Assignment see above	6.11
Engineering Tools		Navigator	7.1
		Drive Solution Designer	7.2
		Drive Solution Catalogue	7.3
		Engineer	7.4
		PLC Designer	7.5
		VisiWinNET®	7.6
		EASY Starter	7.7

Selected portfolio

Additional portfolio

Lenze makes many things easy for you.

With our motivated and committed approach, we work together with you to create the best possible solution and set your ideas in motion - whether you are looking to optimise an existing machine or develop a new one. We always strive to make things easy and seek perfection therein. This is anchored in our thinking, in our services and in every detail of our products. It's as easy as that!

1

Developing ideas

Are you looking to build the best machine possible and already have some initial ideas? Then get these down on paper together with us, starting with small innovative details and stretching all the way to completely new machines. Working together, we will develop an intelligent and sustainable concept that is perfectly aligned with your specific requirements.

2

Drafting concepts

We see welcome challenges in your machine tasks, supporting you with our comprehensive expertise and providing valuable impetus for your innovations. We take a holistic view of the individual motion and control functions here and draw up consistent, end-to-end drive and automation solutions for you - keeping everything as easy as possible and as extensive as necessary.

3

Implementing solutions

Our easy formula for satisfied customers is to establish an active partnership with fast decision-making processes and an individually tailored offer. We have been using this simple principle to meet the ever more specialised customer requirements in the field of mechanical engineering for many years.

4

Manufacturing machines

Functional diversity in perfect harmony: as one of the few full-range providers in the market, we can provide you with precisely those products that you actually need for any machine task – no more and no less. Our L-force product portfolio, a consistent platform for implementing drive and automation tasks, is invaluable in this regard.

5

Ensuring productivity

Productivity, reliability and new performance peaks on a daily basis – these are our key success factors for your machine. After delivery, we offer you cleverly devised service concepts to ensure continued safe operation. The primary focus here is on technical support, based on the excellent application expertise of our highly-skilled and knowledgeable after-sales team.

A matter of principle: the right products for every application.

Lenze's extensive L-force product portfolio follows a very simple principle. The functions of our finely scaled products are assigned to the three lines Base-Line, State-Line or High-Line.

But what does this mean for you? It allows you to quickly recognise which products represent the best solution for your own specific requirements.

Powerful products with a major impact:
- Easy handling
- High quality and durability
- Reliable technologies in tune with the latest developments

Lenze products undergo the most stringent testing in our own laboratory. This allows us to ensure that you will receive consistently high quality and a long service life. In addition to this, five logistics centres ensure that the Lenze products you select are available for quick delivery anywhere across the globe. It's as easy as that!

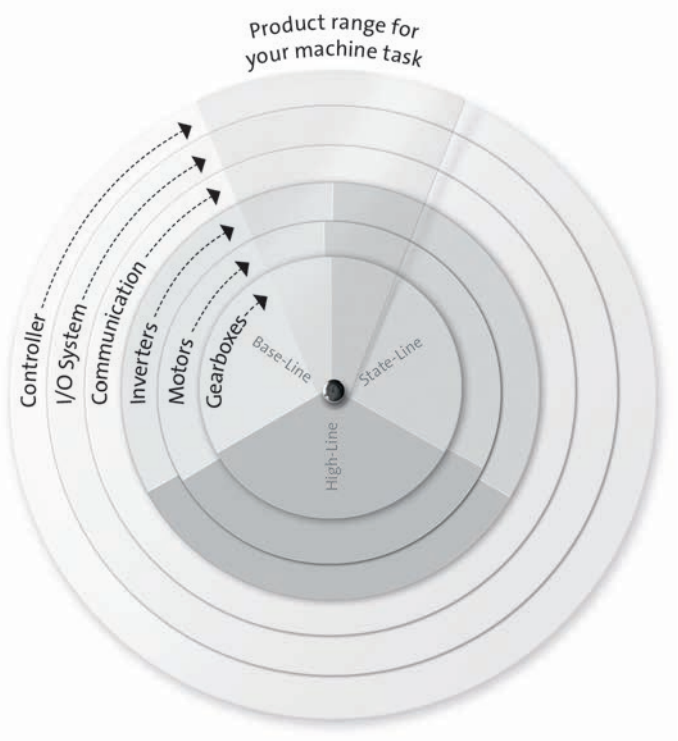

L-force product portfolio

Controls

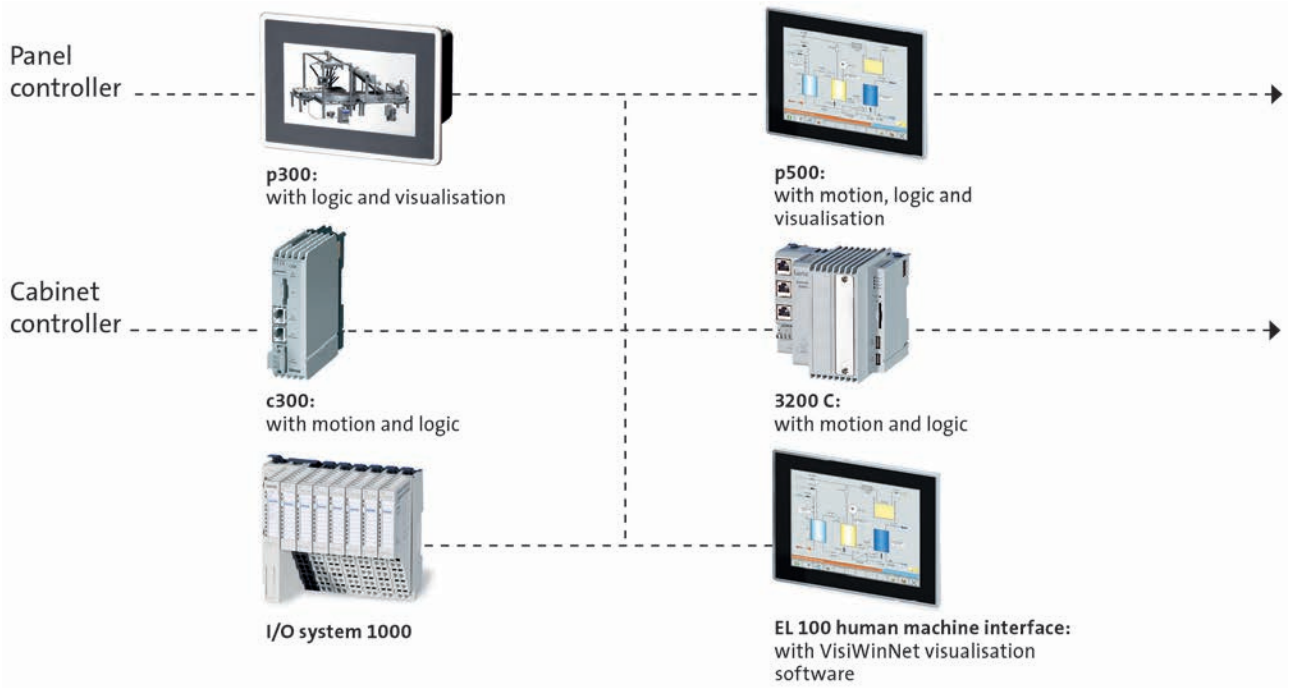

Engineering Tools

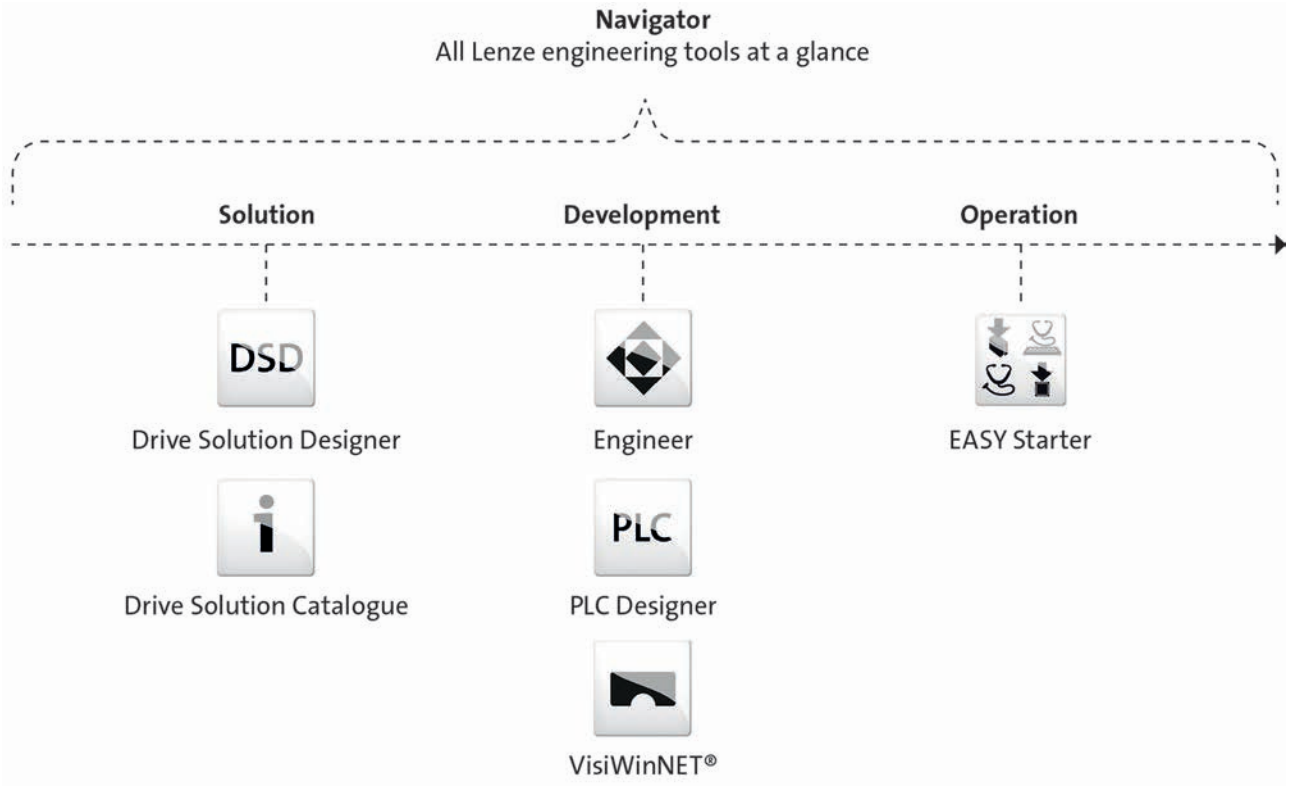

L-force product portfolio

Inverters

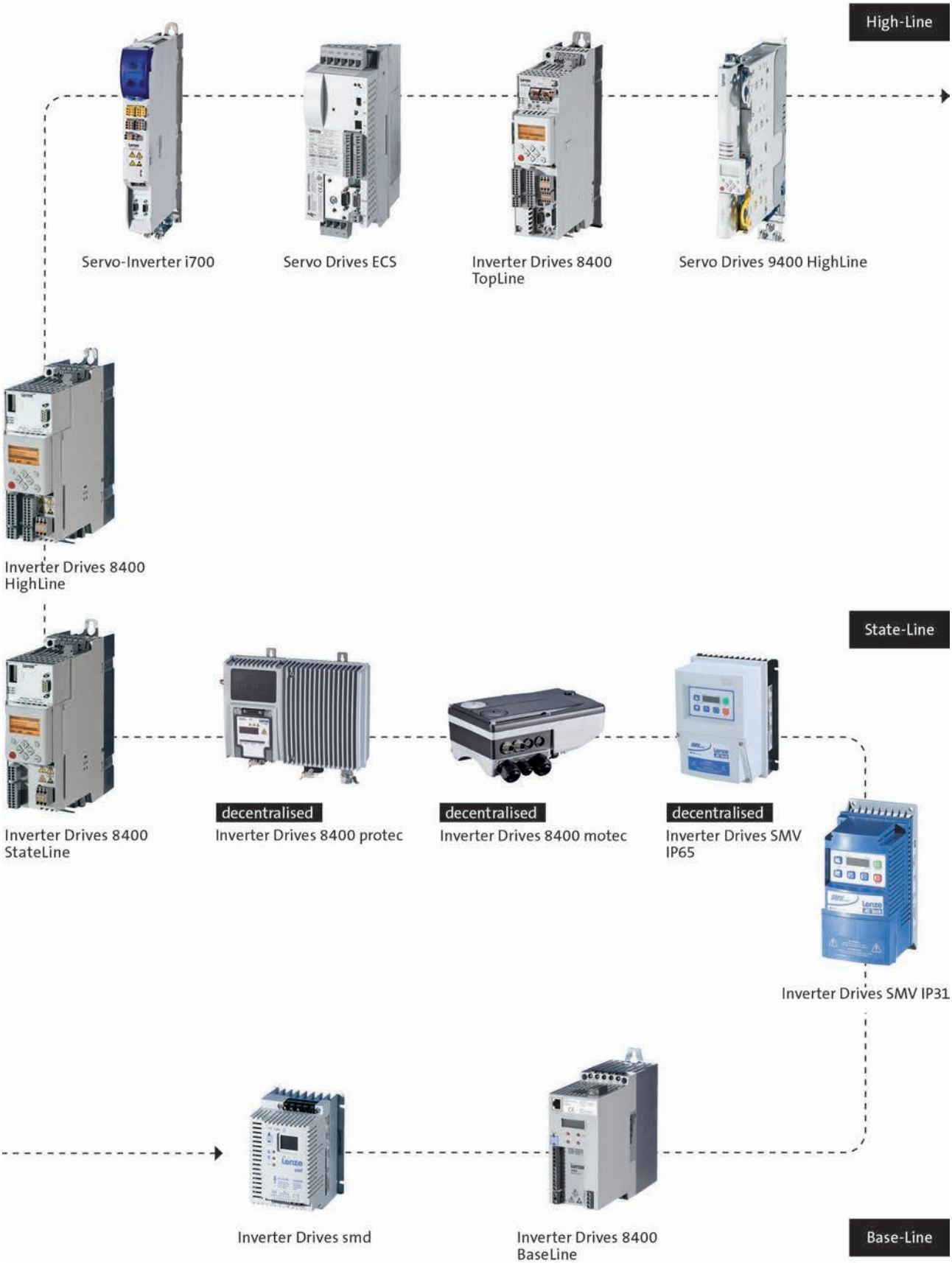

L-force product portfolio

Motors

High-Line

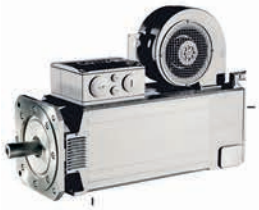

MQA asynchronous servo motors



SDSGS synchronous servo motors



MDXKS synchronous servo motors



Synchronous servo motors MCS



Asynchronous servo motors MCA



Asynchronous servo motors SDSGA

State-Line



MF three-phase AC motors



MH three-phase AC motors



MD three-phase AC motors



Basic MD/MH three-phase AC motors

Base-Line

L-force product portfolio

Gearboxes

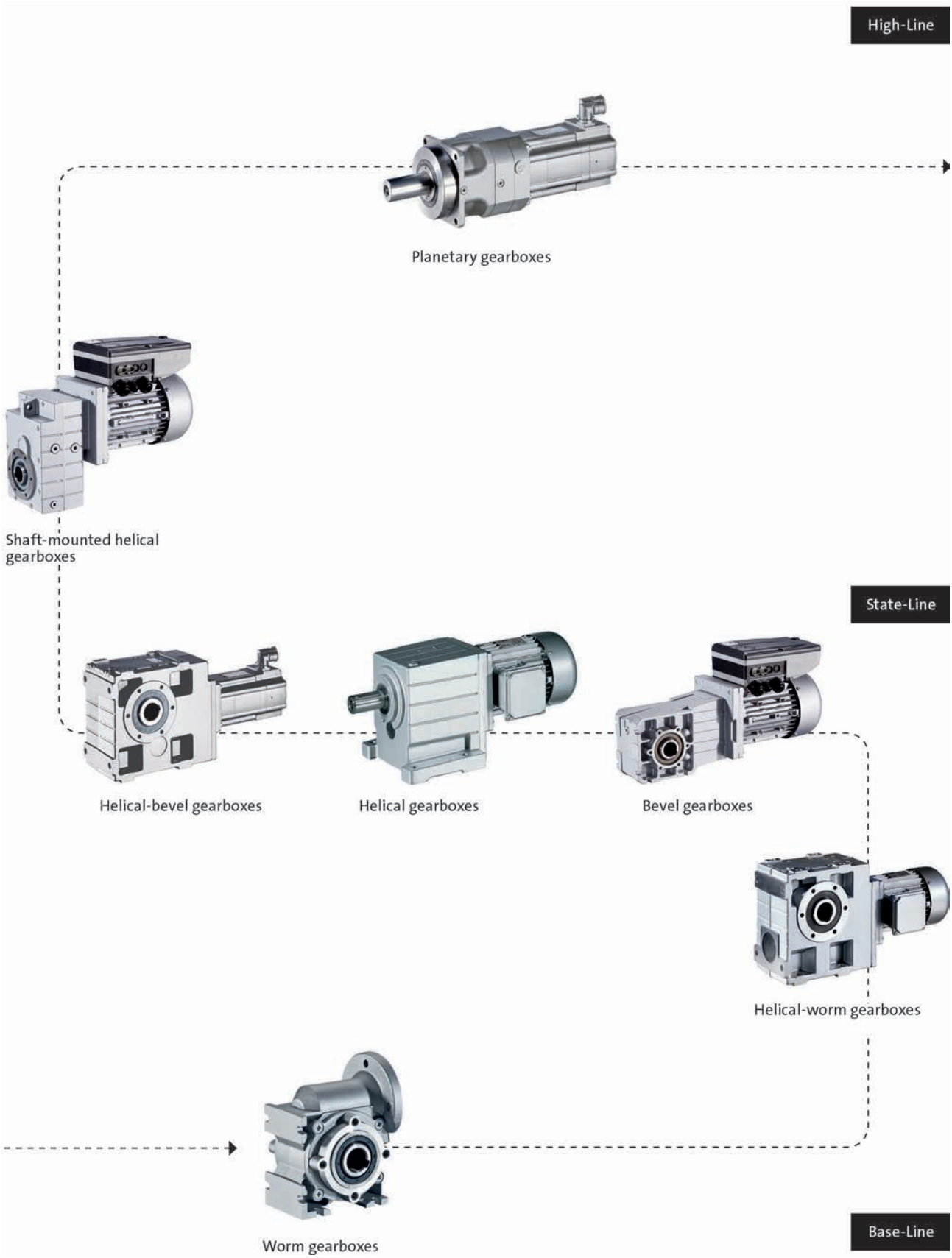

g500-H helical geared motors

0.55 to 7.5 kW (efficiency class better than IE2)

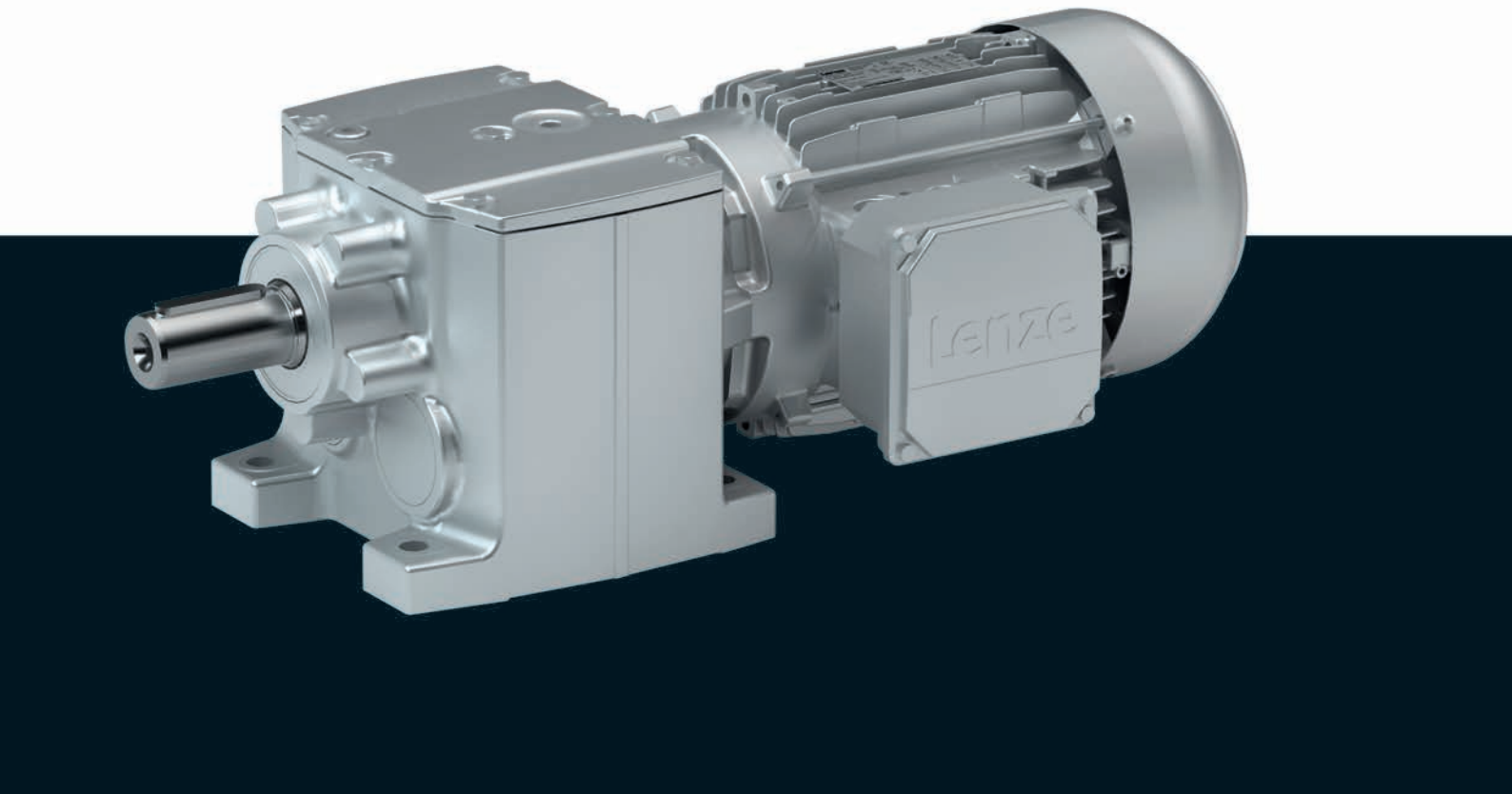

g500-H helical geared motors

Contents



General information	List of abbreviations	6.3 - 5
	Product information	6.3 - 6
	Equipment	6.3 - 7
	The gearbox kit	6.3 - 8
	Dimensioning	6.3 - 14
Technical data	Selection tables, notes	6.3 - 19
	Selection tables, 4-pole motors	6.3 - 20
	Dimensions, notes	6.3 - 38
	Dimensions, 4-pole motors	6.3 - 39
	Weights, 4-pole motors	6.3 - 57
	Surface and corrosion protection	6.3 - 58

Contents





List of abbreviations

c		Load capacity
i		Ratio
m	[kg]	Mass
M_2	[Nm]	Output torque
M_{22}	[Nm]	Output torque
$M_{a_,1}$	[Nm]	Starting torque
$M_{a_,2}$	[Nm]	Starting torque
n_2	[r/min]	Output speed
n_{21}	[r/min]	Output speed
n_{22}	[r/min]	Output speed

CCC	China Compulsory Certificate
CE	Communauté Européenne
CSA	Canadian Standards Association
cURus	Combined certification marks of UL for the USA and Canada
DIN	Deutsches Institut für Normung e.V.
EMC	Electromagnetic compatibility
EN	European standard
GOST	Certificate for Russian Federation
IEC	International Electrotechnical Commission
IM	International Mounting Code
IP	International Protection Code
NEMA	National Electrical Manufacturers Association
UL	Underwriters Laboratory Listed Product
UR	Underwriters Laboratory Recognized Product
VDE	Verband deutscher Elektrotechniker (Association of German Electrical Engineers)



Product information

In combination with three-phase AC motors, our helical gearboxes form a compact and powerful drive unit. Numerous options at the input and output end provide for the drive to be exactly adapted to your application.

The robust helical gearboxes feature high permissible radial forces, closely stepped ratios and a low backlash. They are available in 2-pole and 3-pole design with a torque up to 450 Nm and a ratio of up to i= 370.

Versions

- Fine-scaling of size / torque provides for an optimum machine adaptation
- Standardised shaft and flange dimensions for an easy machine integration
- High efficiency
- With three-phase AC motors better than IE2 in the power range 0.55 ... 7.5 kW

Inverters for motor-proximity installation

The Drive Package with decentralised Inverter Drives 8400 motec covers a power range up to 7.5 kW.

The product name

Gearbox type	Product range		Design	Rated torque [Nm]	Product
Helical gearbox	g500	-	H	45	g500-H45
				100	g500-H100
				140	g500-H140
				210	g500-H210
				320	g500-H320
				450	g500-H450



Equipment

Overview

The equipment includes all the options available as standard and all the built-on accessories of the product.



The gearbox kit

Geared motor

Product	g500-H45	g500-H100	g500-H140	g500-H210	g500-H320	g500-H450
Motor type						
Efficiency class better than IE2	MF□MA AC motors					
4-pole motor						
0.55 - 0.75 kW	063					
1.1 - 1.5 kW		071				
2.2 - 3.0 kW		080				
4.0 kW			090			
5.5 - 7.5 kW					100	
Technical data						
Rated power	See selection table					
Mains voltage						
Mains frequency						
Output torque	See selection table					
Output speed	See selection table					
Ratio	See selection table					
Load capacity	See selection table					
Mounting position						
Standard	A/B/C/D/E/F					
Combined	ABCDEF	AEF				
Colour						
	Not coated Primed Paint in various corrosion-protection designs in accordance with RAL colours					
Surface and corrosion protection						
	Without OKS(uncoated) OKS-G (primed) OKS-S (small) OKS-M (medium) OKS-L (large)					



The gearbox kit

Mounting positions

► Mounting position (A to F) and position of system blocks (1 to 6)

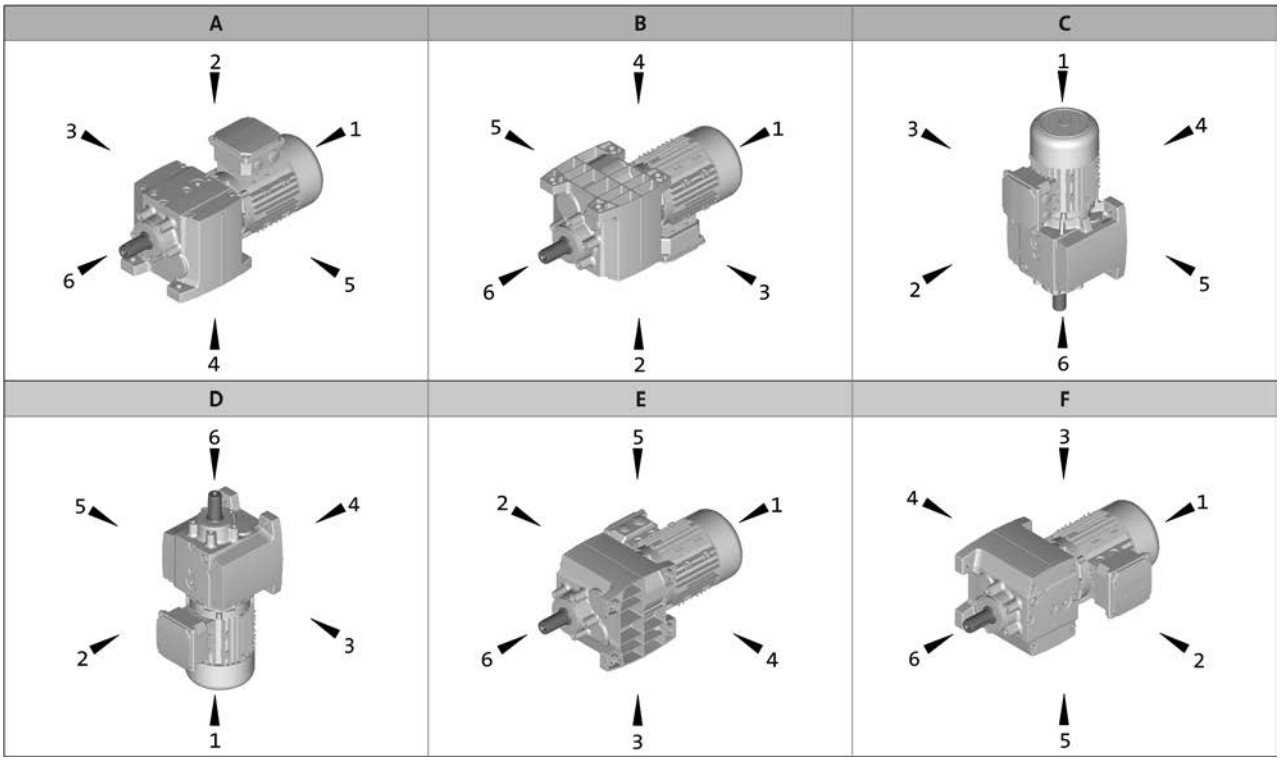

Terminal box / motec: 2, 3, 4, 5



The gearbox kit

Motor details

Product	MF□MA□□					
	063-32 063-42	071-32	071-42	080-32 080-42	090-32	100-12 100-32
Connection type	Terminal box ICN connector HAN-10E connector HAN-Modular connector					
Spring-applied brake						
Rated torque [Nm]	4		4 8	8 16		16 32
Brake voltage [V]	DC 24/180/205 AC 230/400/460					
Brake design	Standard LongLife					
	Standard Overexcited Cold Brake					
Options	Manual release lever Low noise With cover ring					
Feedback	With absolute value encoder With incremental encoder With resolver					
Cooling	Without blower/integral fan Blower Integral fan with increased mass					
Temperature monitoring	TKO thermal contact KTY83-110 thermal detector KTY84-130 thermal detector PTC thermistor					
Approval	cURus CCC					
Enclosure	IP55					
Further options	Protection cover 2nd shaft end Handwheel					

► Further information and installation feasibilities can be found in the Motors chapter.

The gearbox kit

Motor details

Connection type


Terminal box


ICN connector


HAN connector

Cooling: integral fan


Without built-on accessories

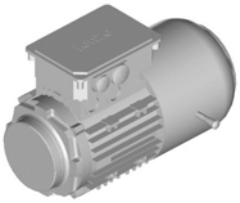
With spring-applied brake
With or without manual release lever

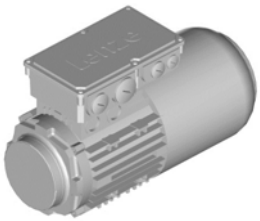
With feedback
With feedback and spring-applied brake

Cooling: blower

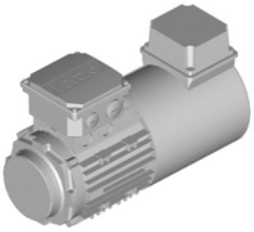
Without built-on accessories

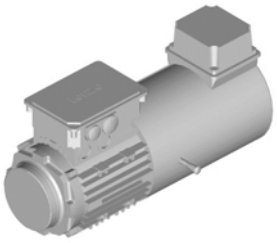
With spring-applied brake
With or without manual release lever

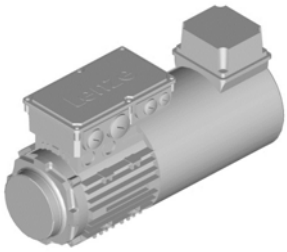
With feedback
With feedback and spring-applied brake

Further options


With 2nd shaft end
Only integral fan

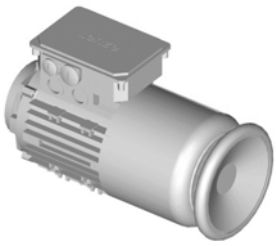
With handwheel
Only integral fan

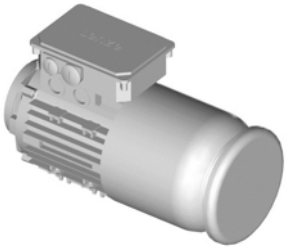
With protection cover



The gearbox kit

Gearbox details

Product	g500-H45	g500-H100	g500-H140	g500-H210	g500-H320	g500-H450
Driven shaft						
Solid shaft without keyway [mm]		20x40	25x50		30x60	35x70
Solid shaft with featherkey [mm]	14x28 20x40	20x40	25x50		30x60	30x60 35x70
Design	Standard stainless steel					
Gasket	Standard FPM (Viton)					
Bearing	Standard	Standard Reinforced				
Fitting grease	Not enclosed Enclosed					
Housing						
Housing version	With foot Without foot with centering	With foot With foot and centering Without foot with centering				
Output flange						
flange diameter [mm]	120/140/160			120/140/160/200	160/200	160/200/250
Lubricant						
Type	CLP 460 [1)] CLP HC 320 CLP HC 220 CLP HC 220 USDA H1					
Oil-level inspection	Without inspection With inspection					
Breather element	Without				Standard mounting position: Mounted Combined mounting position: loosely enclosed	
Backlash						
Backlash	Standard					

[1)] Not suitable for geared servo motors.

► Further information and installation feasibilities can be found in the Gearboxes chapter.

The gearbox kit

Gearbox details

Solid shaft		
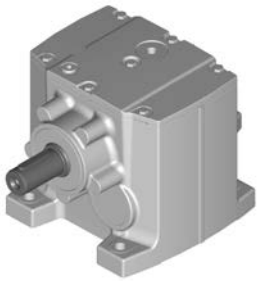 Foot mounting	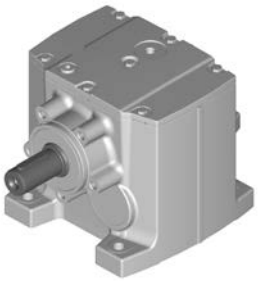 Foot mounting With centering	 Foot mounting Flange with through holes

Solid shaft	
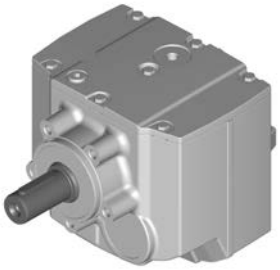 With centering	 Flange with through holes



Dimensioning

General information about the data provided in this catalogue

The powers, torques and speeds specified in this catalogue are rounded values and are valid under the following conditions:

- Operating time/day = 8 h (100% OT)
- Duty class I for up to 10 switching operations/h
- Mounting positions and designs in this catalogue
- Standard lubricant
- T_{amb} = 20 °C for gearboxes,
  T_{amb} = 40 °C for motors (in accordance with EN 60034)
- Site altitude < = 1000 m amsl
- The selection tables provide the permissible mechanical powers and torques. For notes on the thermal power limit, see chapter drive dimensioning.
- The rated power specified for motors and geared motors applies to operating mode S1 (in accordance with EN 60034).

Under different operating conditions, the values obtained may vary from those listed here.
In the case of extreme operating conditions, please consult your Lenze sales office.



Dimensioning

Thermal power limit

The thermal power limit, defined by the heat balance, limits the permissible gearbox continuous power. It may be less than the mechanical power ratings listed in the selection tables.

The thermal power limit is affected by:
- the churning losses in the lubricant. These are determined by the mounting position and the circumferential speed of the gears;
- the load and the speed
- the ambient conditions: temperature, air circulation, input or dissipation via shafts and the foundation

If the following input speeds n_1 are exceeded, please contact Lenze:

Motor frame size	Mounting position A, B, E, F	Mounting position C, D
063 ... 100	4000 r/min	3000 r/min
112 ... 132	3000 r/min	1500 r/min

► For a short period of time up to 5 min, 30 % higher speeds are permissible

Possible ways of extending the application area

- synthetic lubricant (option)
- shaft sealing rings made from FP material/Viton (option)
- reduction in lubricant quantity
- cooling of the geared motor by means of air convection on the machine/system



Dimensioning

Load capacity and application factor

Load capacity c of gearbox
Rated value for the load capacity of Lenze geared motors.
- c is the ratio of the permissible rated torque of the gearbox to the rated torque supplied by the drive component (e.g. the built-in Lenze motor).
- The value of c must always be greater than the value of the application factor k calculated for the application.

Application factor k (according to DIN 3990)
Takes into account the influence of temporally variable loads which are actually present during the anticipated operating time of gearboxes and geared motors.
k is determined by:
- the type of load
- the load intensity
- temporal influences

Duty class	Load type
I	Smooth operation, small or light jolts
II	Uneven operation, average jolts
III	Uneven operation, severe jolts and/or alternating load

Application factor k

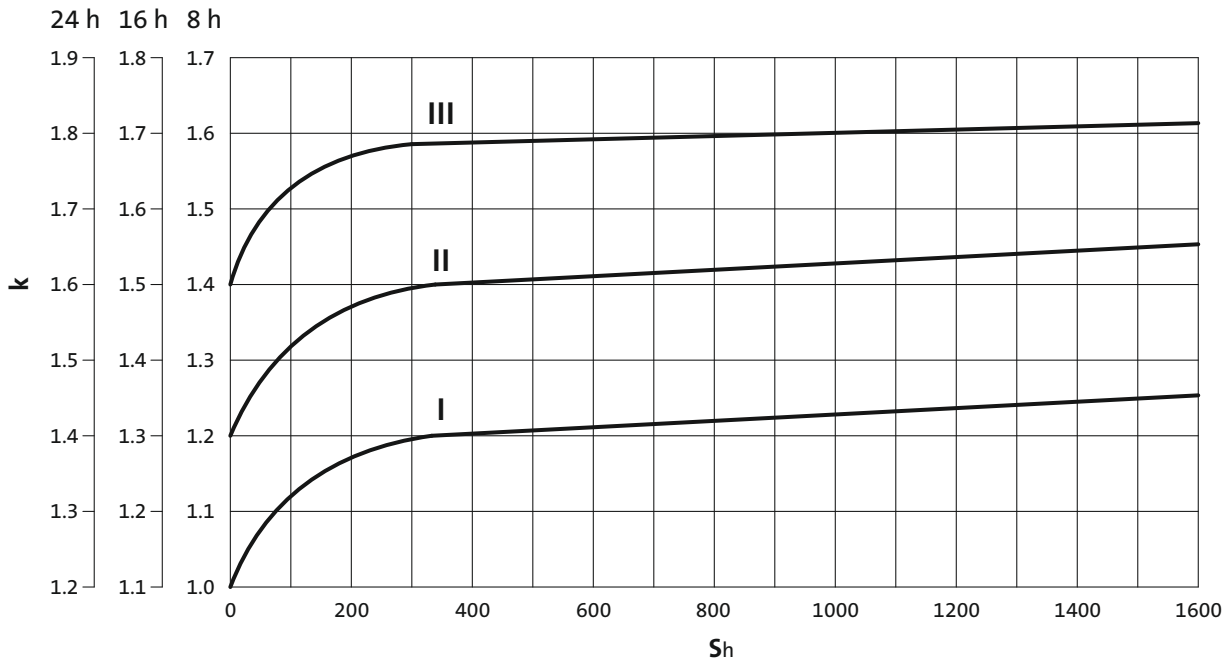

► S_h= switchings/h

Dimensioning

Torque derating at low motor frequencies

Motor size-dependent torque reduction, taking into account the thermal response during operation on the inverter.

Torque characteristics

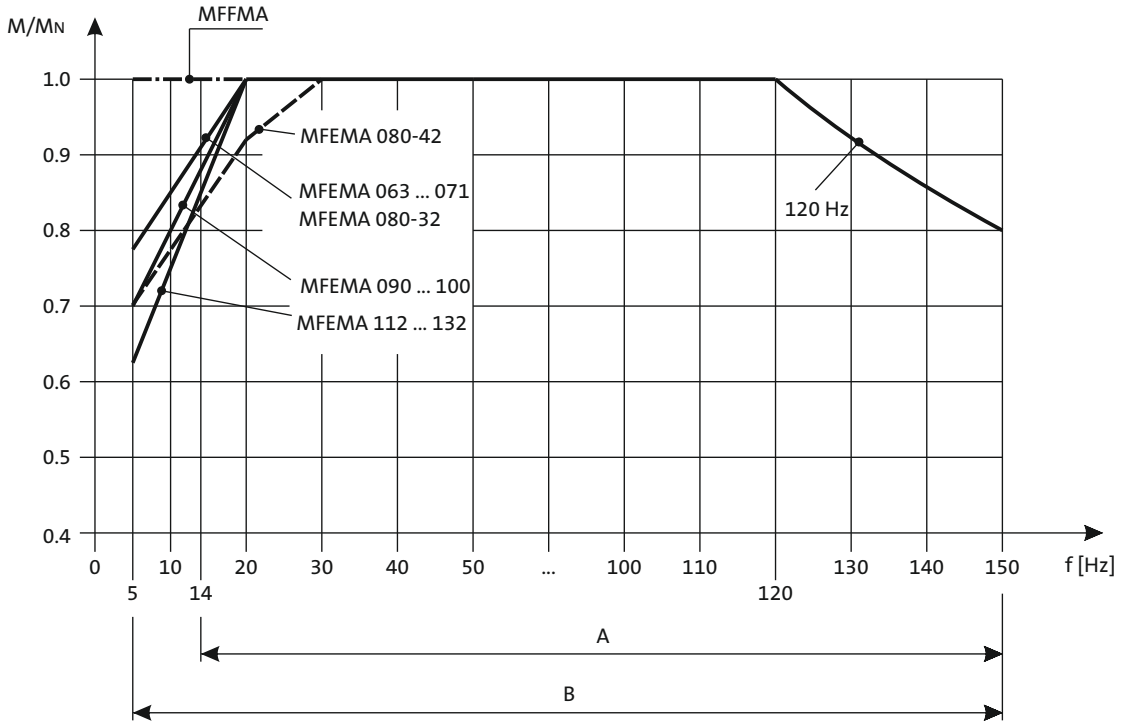

A = Operation with integral fan and brake
B = Operation with integral fan and brake control "Holding current reduction"

You can use the Drive Solution Designer for precise drive dimensioning.

The Drive Solution Designer helps you to carry out a fast and high-quality drive dimensioning.
The software includes well-founded and proven knowledge on drive applications and electro-mechanical drive components.

Please contact your Lenze sales office.



Dimensioning

Weights

The values given in the tables consider the following gearbox/motor combination:
- Gearbox with solid shaft without foot and flange including lubricant amount for mounting position A
- Motor without built-on accessories (with integral fan)

For versions deviating from this, additional weights have to be considered.

The respective values can be found for:
- Geared motors without built-on accessories
  > Chapter: Geared motors/Technical data
- Gearbox options
  > Chapter: Gearboxes/Technical data and accessories
- Motor options: Spring-applied brake, feedback, 2. Shaft end, handwheel and increased centrifugal mass
  > Chapter: Motors/Accessories

Moments of inertia

The given moments of inertia of the gearbox refer to the drive shaft. The influence of the ratio (i^2) has been considered in the data.

When the total moment of inertia of the geared motor is calculated, the values of the gearbox, motor and accessories have to be added.

The respective values can be found for:
- Gearboxes
  > Chapter: Gearbox/Technical data
- Motors without built-on accessories
  > Chapter: Motors/Technical data/Rated data
- Motor options: Spring-applied brake, feedback, 2. Shaft end, handwheel and increased centrifugal mass
  > Chapter: Motors/Accessories



Selection tables, notes

Notes on the selection tables with 4-pole motors

The selection tables show the available combinations of gearbox type, number of stages, ratio and motor. They are used only to provide basic orientation.
The following legend indicates the structure of the selection tables.

Rated power Prated of the drive motor depending on the rated frequency

120 Hz: P_N = 0.55 kW

2-stufige Getriebe ← **Number of the gear stage of the gearbox**

Torque diagram

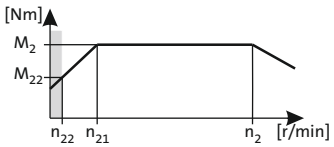

Inverter operation							i	Product		
5 Hz -		- 20 Hz		- 120 Hz (1:24)						
n_{22} [r/min]	M_{22} [Nm]	n_{21} [r/min]	M_2 [Nm]	n_2 [r/min]	M_2 [Nm]	c		g500	MF□MA□□	
33	4.9	137	6.0	788	6.0	2.5	4.368	-H45	063-32	39
25	6.6	102	9.0	584	9.0	4.5	5.887	-H100	063-32	42

Product Gearbox | **Product Motor** | **Ratio i** | **Page number for dimensions**

Inverter operation
The speed and torque data are valid for self-ventilated and forced ventilated drives. Forced ventilated drives can always output the torque **M2** in the entire setting ranges. In the case of self-ventilated drives, a reduction to **M22** is required in the lower speed range.

The following applies to self-ventilated geared motors:
n22 is the minimum speed where the torque **M22** is permissible, from **n21** to **n2**, the maximum torque is **M2**
The following applies to forced ventilated geared motors:
From the minimum speed **n22** to **n2**, the maximum torque is **M2**

Load capacity c of the gearbox
c is the ratio between the permissible rated torque of the gearbox and the rated torque of the three-phase AC motor (converted to the driven shaft).
c must be always higher than the service factor **k** determined for the application **k**.

$$c = \frac{M_{2,zul}}{M_{1N} \cdot i \cdot \eta_{Getr}} > k$$

6.3

Motor voltages

The power values and torques indicated in the selection tables relate to the following motor voltages:
- 50 Hz : Δ 230 V / Y 400 V
- 60 Hz : 230 V or 460 V
- 87 Hz : Δ 400 V

Operation at 87 Hz

In 87 Hz operation, the three-phase AC motor (which is designed for a voltage of Δ 230 V / Y 400 V at 50 Hz) is operated on an inverter with 400 V rated voltage in a delta connection. It is important to note here that the inverter must be configured for 87Hz output.
This offers the following advantages over 50 Hz operation:
- the setting range of the motor is increased by a factor of 1.73.
- the motor can then provide around 1.73 times greater output, which in turn allows a smaller and more affordable motor to be selected for the application.
- the efficiency of the motor is also improved.



Selection tables, 4-pole motors

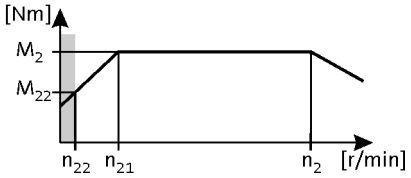

120 Hz: P_N = 0.55 kW

2-stage gearboxes

Umrichterbetrieb							i	Produkt		
5 Hz -		- 20 Hz		- 120 Hz (1:24)						
n_{22} [r/min]	M_{22} [Nm]	n_{21} [r/min]	M_2 [Nm]	n_2 [r/min]	M_2 [Nm]	c		g500	MF□MA□□	
33	4.9	137	6.0	788	6.0	2.5	4.368	-H45	063-32	39
25	6.6	102	9.0	584	9.0	4.5	5.887	-H100	063-32	42
23	7.2	93	10	534	10	4.5	6.440	-H100	063-32	42
18	9.2	73	12	419	12	4.2	8.214	-H100	063-32	42
16	10	67	13	385	13	1.9	8.935	-H45	063-32	39
16	10	66	13	379	13	4.5	9.068	-H100	063-32	42
15	11	60	15	343	15	1.8	10.033	-H45	063-32	39
14	11	60	15	342	15	3.7	10.063	-H100	063-32	42
13	13	53	17	303	17	4.5	11.360	-H100	063-32	42
13	13	53	17	301	17	1.6	11.429	-H45	063-32	39
12	14	47	19	272	19	4.1	12.653	-H100	063-32	42
11	14	47	19	268	19	1.5	12.833	-H45	063-32	39
10	16	41	21	237	21	3.5	14.490	-H100	063-32	42
9.8	17	40	22	232	22	1.4	14.836	-H45	063-32	39
9.4	17	39	23	222	23	3.3	15.500	-H100	063-32	42
8.7	19	36	25	207	25	1.4	16.660	-H45	063-32	39
8.2	20	34	26	194	26	2.9	17.750	-H100	063-32	42
7.6	21	32	28	181	28	1.3	19.013	-H45	063-32	39
7.4	22	31	29	177	29	2.6	19.486	-H100	063-32	42
6.8	24	28	32	161	32	1.2	21.350	-H45	063-32	39
6.5	25	27	33	154	33	2.3	22.314	-H100	063-32	42
5.9	28	24	36	140	36	1.1	24.595	-H45	063-32	39
5.8	28	24	37	139	37	2.9	24.829	-H140	063-32	45
5.8	28	24	37	137	37	2.0	25.095	-H100	063-32	42
5.3	31	22	41	126	41	3.0	27.415	-H140	063-32	45
5.0	32	21	43	120	43	2.0	28.738	-H100	063-32	42
4.6	36	19	47	108	47	1.8	31.805	-H100	063-32	42
4.5	36	19	47	108	47	2.6	31.976	-H140	063-32	45
4.1	39	17	52	98	52	3.2	35.095	-H210	063-32	48
4.1	40	17	52	97	52	2.3	35.308	-H140	063-32	45
4.0	41	17	54	94	54	1.6	36.422	-H100	063-32	42
3.8	43	16	57	90	57	3.2	38.238	-H320	063-32	51
3.7	44	15	58	88	58	3.1	39.286	-H210	063-32	48
3.6	45	15	59	86	59	1.2	39.857	-H100	063-32	42
3.6	45	15	60	85	60	2.2	40.526	-H140	063-32	45



Selection tables, 4-pole motors

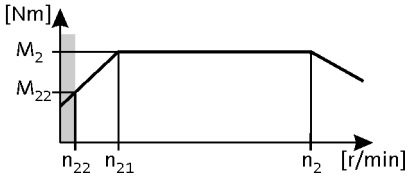

120 Hz: P_N = 0.55 kW

2-stage gearboxes

Umrichterbetrieb							i	Produkt		
5 Hz -		- 20 Hz		- 120 Hz (1:24)						
n_{22} [r/min]	M_{22} [Nm]	n_{21} [r/min]	M_2 [Nm]	n_2 [r/min]	M_2 [Nm]	c		g500	MF□MA□□	
3.4	48	14	63	81	63	2.8	42.593	-H210	063-32	48
3.2	50	13	66	77	66	2.0	44.748	-H140	063-32	45
3.2	51	13	68	75	68	1.3	45.643	-H100	063-32	42
3.1	52	13	69	74	69	3.0	46.407	-H320	063-32	51
3.0	54	13	71	72	71	2.8	47.679	-H210	063-32	48
2.9	57	12	75	68	75	1.3	50.786	-H140	063-32	45
2.8	59	11	78	65	78	3.0	52.715	-H320	063-32	51
2.7	61	11	81	63	81	1.5	54.438	-H210	063-32	48
2.6	61	11	81	63	81	2.8	54.750	-H450	063-32	54
2.6	63	11	83	61	83	1.3	56.077	-H140	063-32	45
2.4	68	9.8	90	57	90	1.5	60.938	-H210	063-32	48
2.3	69	9.7	92	56	92	2.8	61.875	-H450	063-32	54

3-stage gearboxes

Umrichterbetrieb							i	Produkt		
5 Hz -		- 20 Hz		- 120 Hz (1:24)						
n_{22} [r/min]	M_{22} [Nm]	n_{21} [r/min]	M_2 [Nm]	n_2 [r/min]	M_2 [Nm]	c		g500	MF□MA□□	
2.6	61	11	81	62	81	2.2	55.529	-H210	063-32	48
2.4	67	9.9	88	57	88	3.1	60.502	-H320	063-32	51
2.3	69	9.7	91	55	91	2.0	62.160	-H210	063-32	48
2.1	76	8.7	100	50	100	2.8	68.726	-H320	063-32	51
2.0	78	8.4	104	48	104	1.8	71.026	-H210	063-32	48
1.9	86	7.8	113	45	113	2.4	77.387	-H320	063-32	51
1.8	88	7.5	116	43	116	1.6	79.507	-H210	063-32	48
1.6	97	6.8	128	39	128	2.4	87.906	-H320	063-32	51
1.6	102	6.5	135	37	135	1.5	92.205	-H210	063-32	48
1.5	107	6.2	141	36	141	3.1	96.522	-H450	063-32	54
1.4	111	6.0	147	34	147	2.1	100.462	-H320	063-32	51
1.4	114	5.8	151	33	151	1.3	103.214	-H210	063-32	48
1.3	121	5.5	159	32	159	2.7	109.083	-H450	063-32	54
1.3	126	5.3	167	30	167	1.8	114.118	-H320	063-32	51
1.2	131	5.1	172	29	172	1.2	118.162	-H210	063-32	48
1.2	134	4.9	177	28	177	2.4	121.342	-H450	063-32	54
1.1	142	4.7	188	27	188	1.6	128.743	-H320	063-32	51
1.1	146	4.5	193	26	193	1.0	132.270	-H210	063-32	48
1.1	151	4.4	200	25	200	2.2	137.133	-H450	063-32	54
1.0	162	4.1	213	24	213	1.4	146.244	-H320	063-32	51
0.9	173	3.8	228	22	228	1.9	156.274	-H450	063-32	54
0.9	184	3.6	243	21	243	1.3	166.541	-H320	063-32	51
0.8	195	3.4	258	20	258	1.7	176.611	-H450	063-32	54



Selection tables, 4-pole motors

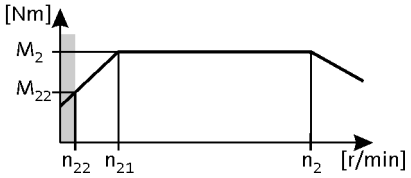

120 Hz: P_N = 0.55 kW

3-stage gearboxes

Umrichterbetrieb							i	Produkt		
5 Hz -		- 20 Hz		- 120 Hz (1:24)						
n_{22} [r/min]	M_{22} [Nm]	n_{21} [r/min]	M_2 [Nm]	n_2 [r/min]	M_2 [Nm]	c		g500	MF□MA□□	
0.8	209	3.2	276	18	276	1.1	189.179	-H320	063-32	51
0.7	219	3.0	289	17	289	1.5	198.059	-H450	063-32	54
0.6	247	2.7	327	15	327	1.3	223.833	-H450	063-32	54
0.6	274	2.4	362	14	362	1.2	248.200	-H450	063-32	54
0.5	310	2.1	409	12	409	1.1	280.500	-H450	063-32	54



Selection tables, 4-pole motors

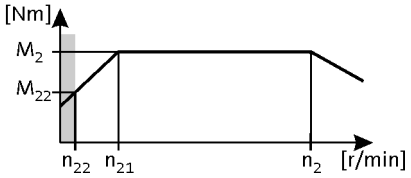

120 Hz: P_N = 0.75 kW

2-stage gearboxes

Umrichterbetrieb							i	Produkt		
5 Hz -		- 20 Hz		- 120 Hz (1:24)						
n_{22} [r/min]	M_{22} [Nm]	n_{21} [r/min]	M_2 [Nm]	n_2 [r/min]	M_2 [Nm]	c		g500	MF□MA□□	
33	6.7	137	9.0	778	9.0	1.8	4.368	-H45	063-42	39
25	9.0	102	12	578	12	3.3	5.887	-H100	063-42	42
23	9.8	93	13	528	13	3.3	6.440	-H100	063-42	42
18	12	75	16	425	16	3.0	8.000	-H140	063-42	45
18	13	73	17	414	17	3.0	8.214	-H100	063-42	42
16	14	67	18	381	18	1.4	8.935	-H45	063-42	39
16	14	66	19	375	19	3.3	9.068	-H100	063-42	42
15	15	61	20	347	20	2.7	9.800	-H140	063-42	45
15	15	60	21	339	21	1.3	10.033	-H45	063-42	39
14	15	60	21	338	21	2.7	10.063	-H100	063-42	42
13	17	53	23	299	23	3.3	11.360	-H100	063-42	42
13	18	53	23	298	23	1.1	11.429	-H45	063-42	39
12	19	47	26	269	26	2.9	12.653	-H100	063-42	42
11	20	47	26	265	26	1.1	12.833	-H45	063-42	39
10	22	41	30	235	30	2.6	14.490	-H100	063-42	42
9.4	24	39	32	219	32	2.4	15.500	-H100	063-42	42
9.0	25	37	33	211	33	3.0	16.122	-H140	063-42	45
8.7	26	36	34	204	34	1.0	16.660	-H45	063-42	39
8.2	27	34	36	192	36	2.1	17.750	-H100	063-42	42
8.1	27	34	36	191	36	2.9	17.802	-H140	063-42	45
7.4	30	31	40	175	40	1.9	19.486	-H100	063-42	42
7.3	30	30	40	172	40	2.6	19.750	-H140	063-42	45
6.7	33	28	45	156	45	2.7	21.802	-H210	063-42	48
6.6	33	28	45	156	45	2.4	21.808	-H140	063-42	45
6.5	34	27	46	152	46	1.7	22.314	-H100	063-42	42
6.1	36	25	49	143	49	2.7	23.754	-H320	063-42	51
5.9	37	25	50	139	50	2.7	24.405	-H210	063-42	48
5.8	38	24	51	137	51	2.1	24.829	-H140	063-42	45
5.8	38	24	51	136	51	1.5	25.095	-H100	063-42	42
5.4	41	22	55	126	55	3.1	26.983	-H320	063-42	51
5.3	42	22	55	125	55	2.6	27.119	-H210	063-42	48
5.3	42	22	56	124	56	2.2	27.415	-H140	063-42	45
5.0	44	21	59	118	59	1.5	28.738	-H100	063-42	42
4.9	45	20	60	115	60	2.6	29.548	-H320	063-42	51
4.8	46	20	62	112	62	2.6	30.357	-H210	063-42	48



Selection tables, 4-pole motors

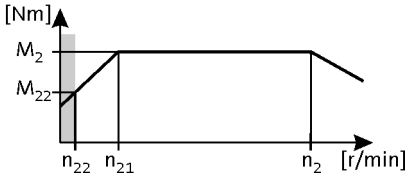

120 Hz: P_N = 0.75 kW

2-stage gearboxes

Umrichterbetrieb							i	Produkt		
5 Hz -		- 20 Hz		- 120 Hz (1:24)						
n_{22} [r/min]	M_{22} [Nm]	n_{21} [r/min]	M_2 [Nm]	n_2 [r/min]	M_2 [Nm]	c		g500	MF□MA□□	
4.6	49	19	65	107	65	1.3	31.805	-H100	063-42	42
4.5	49	19	65	106	65	1.9	31.976	-H140	063-42	45
4.3	51	18	69	101	69	2.6	33.564	-H320	063-42	51
4.1	54	17	72	97	72	2.3	35.095	-H210	063-42	48
4.1	54	17	72	96	72	1.7	35.308	-H140	063-42	45
4.1	55	17	73	95	73	2.6	35.689	-H450	063-42	54
4.0	56	17	74	93	74	1.2	36.422	-H100	063-42	42
3.8	59	16	78	89	78	2.3	38.238	-H320	063-42	51
3.7	60	15	80	87	80	2.3	39.286	-H210	063-42	48
3.6	62	15	82	84	82	2.9	40.333	-H450	063-42	54
3.6	62	15	83	84	83	1.6	40.526	-H140	063-42	45
3.4	65	14	87	80	87	2.0	42.593	-H210	063-42	48
3.3	66	14	89	79	89	2.5	43.313	-H450	063-42	54
3.3	66	14	89	78	89	2.6	43.436	-H320	063-42	51
3.2	68	13	91	76	91	1.5	44.748	-H140	063-42	45
3.1	71	13	95	73	95	2.2	46.407	-H320	063-42	51
3.0	73	13	97	71	97	2.0	47.679	-H210	063-42	48
3.0	75	12	100	70	100	2.5	48.950	-H450	063-42	54
2.8	81	11	108	65	108	2.2	52.715	-H320	063-42	51
2.7	83	11	111	63	111	1.1	54.438	-H210	063-42	48
2.6	84	11	112	62	112	2.1	54.750	-H450	063-42	54
2.4	93	9.8	125	56	125	1.1	60.938	-H210	063-42	48
2.3	95	9.7	126	55	126	2.1	61.875	-H450	063-42	54

3-stage gearboxes

Umrichterbetrieb							i	Produkt		
5 Hz -		- 20 Hz		- 120 Hz (1:24)						
n_{22} [r/min]	M_{22} [Nm]	n_{21} [r/min]	M_2 [Nm]	n_2 [r/min]	M_2 [Nm]	c		g500	MF□MA□□	
2.6	84	11	112	61	112	1.6	55.529	-H210	063-42	48
2.4	91	9.9	122	56	122	2.3	60.502	-H320	063-42	51
2.3	93	9.7	124	55	124	3.1	61.774	-H450	063-42	54
2.3	94	9.7	125	55	125	1.5	62.160	-H210	063-42	48
2.1	104	8.7	138	50	138	2.0	68.726	-H320	063-42	51
2.1	105	8.6	141	49	141	2.8	69.813	-H450	063-42	54
2.0	107	8.4	143	48	143	1.3	71.026	-H210	063-42	48
1.9	117	7.8	156	44	156	1.8	77.387	-H320	063-42	51
1.8	119	7.6	159	43	159	2.5	78.794	-H450	063-42	54
1.8	120	7.5	160	43	160	1.1	79.507	-H210	063-42	48
1.6	132	6.8	177	39	177	1.7	87.906	-H320	063-42	51
1.6	134	6.7	179	38	179	2.4	89.048	-H450	063-42	54



Selection tables, 4-pole motors

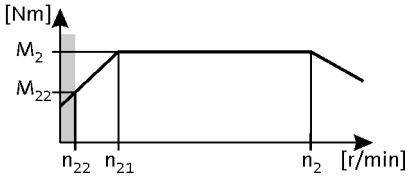

120 Hz: P_N = 0.75 kW

3-stage gearboxes

Umrichterbetrieb							i	Produkt		
5 Hz -		- 20 Hz		- 120 Hz (1:24)						
n_{22} [r/min]	M_{22} [Nm]	n_{21} [r/min]	M_2 [Nm]	n_2 [r/min]	M_2 [Nm]	c		g500	MF□MA□□	
1.6	139	6.5	186	37	186	1.1	92.205	-H210	063-42	48
1.5	145	6.2	194	35	194	2.2	96.522	-H450	063-42	54
1.4	151	6.0	202	34	202	1.5	100.462	-H320	063-42	51
1.3	164	5.5	220	31	220	2.0	109.083	-H450	063-42	54
1.3	172	5.3	230	30	230	1.3	114.118	-H320	063-42	51
1.2	183	4.9	244	28	244	1.8	121.342	-H450	063-42	54
1.1	194	4.7	259	26	259	1.2	128.743	-H320	063-42	51
1.1	207	4.4	276	25	276	1.6	137.133	-H450	063-42	54
1.0	220	4.1	294	23	294	1.0	146.244	-H320	063-42	51
0.9	235	3.8	315	22	315	1.4	156.274	-H450	063-42	54
0.8	266	3.4	356	19	356	1.2	176.611	-H450	063-42	54
0.7	298	3.0	399	17	399	1.1	198.059	-H450	063-42	54



Selection tables, 4-pole motors

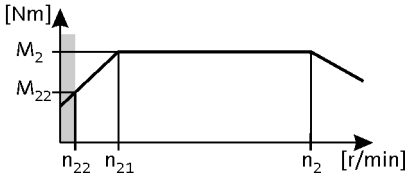

120 Hz: P_N = 1.1 kW

2-stage gearboxes

Umrichterbetrieb							i	Produkt		
5 Hz -		- 20 Hz		- 120 Hz (1:24)						
n_{22} [r/min]	M_{22} [Nm]	n_{21} [r/min]	M_2 [Nm]	n_2 [r/min]	M_2 [Nm]	c		g500	MF□MA□□	
25	13	102	17	593	17	3.6	5.887	-H100	071-32	42
23	14	93	19	542	19	3.3	6.440	-H100	071-32	42
18	18	73	24	425	24	2.9	8.214	-H100	071-32	42
16	20	66	26	385	26	2.7	9.068	-H100	071-32	42
15	22	61	29	356	29	3.2	9.800	-H140	071-32	45
14	23	60	29	347	29	2.5	10.063	-H100	071-32	42
13	26	53	33	307	33	2.3	11.360	-H100	071-32	42
13	26	52	34	302	34	2.9	11.554	-H140	071-32	45
12	28	48	37	276	37	2.7	12.640	-H140	071-32	45
12	28	47	37	276	37	2.0	12.653	-H100	071-32	42
10	31	43	41	250	41	2.5	13.957	-H140	071-32	45
10	33	41	42	241	42	1.8	14.490	-H100	071-32	42
9.4	35	39	45	225	45	1.7	15.500	-H100	071-32	42
9.0	36	37	47	217	47	2.2	16.122	-H140	071-32	45
8.7	38	36	49	208	49	3.2	16.750	-H210	071-32	48
8.2	40	34	52	197	52	1.5	17.750	-H100	071-32	42
8.1	40	34	52	196	52	2.0	17.802	-H140	071-32	45
7.7	42	32	55	186	55	2.9	18.750	-H210	071-32	48
7.4	44	31	57	179	57	1.3	19.486	-H100	071-32	42
7.3	44	30	58	177	58	1.8	19.750	-H140	071-32	45
6.7	49	28	64	160	64	2.5	21.802	-H210	071-32	48
6.6	49	28	64	160	64	1.7	21.808	-H140	071-32	45
6.5	50	27	65	156	65	1.2	22.314	-H100	071-32	42
6.1	53	25	69	147	69	3.2	23.754	-H320	071-32	51
5.9	55	25	71	143	71	2.2	24.405	-H210	071-32	48
5.8	56	24	73	141	73	1.5	24.829	-H140	071-32	45
5.8	56	24	73	139	73	1.0	25.095	-H100	071-32	42
5.3	61	22	79	129	79	2.3	27.119	-H210	071-32	48
5.3	62	22	80	127	80	1.5	27.415	-H140	071-32	45
5.0	64	21	84	121	84	1.0	28.738	-H100	071-32	42
4.9	66	20	86	118	86	3.1	29.548	-H320	071-32	51
4.8	68	20	89	115	89	2.0	30.357	-H210	071-32	48
4.5	72	19	93	109	93	1.3	31.976	-H140	071-32	45
4.3	75	18	98	104	98	2.8	33.564	-H320	071-32	51
4.1	79	17	102	99	102	1.8	35.095	-H210	071-32	48



Selection tables, 4-pole motors

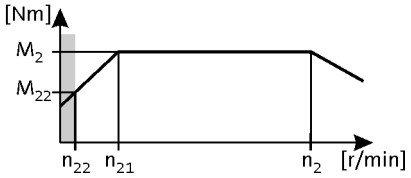

120 Hz: P_N = 1.1 kW

2-stage gearboxes

Umrichterbetrieb							i	Produkt		
5 Hz -		- 20 Hz		- 120 Hz (1:24)						
n_{22} [r/min]	M_{22} [Nm]	n_{21} [r/min]	M_2 [Nm]	n_2 [r/min]	M_2 [Nm]	c		g500	MF□MA□□	
4.1	79	17	103	99	103	1.2	35.308	-H140	071-32	45
4.1	80	17	104	98	104	3.1	35.689	-H450	071-32	54
3.8	86	16	112	91	112	1.9	38.238	-H320	071-32	51
3.7	88	15	115	89	115	1.6	39.286	-H210	071-32	48
3.4	96	14	124	82	124	1.4	42.593	-H210	071-32	48
3.3	97	14	126	81	126	2.4	43.313	-H450	071-32	54
3.3	97	14	127	80	127	2.1	43.436	-H320	071-32	51
3.1	104	13	136	75	136	1.5	46.407	-H320	071-32	51
3.0	107	13	139	73	139	1.4	47.679	-H210	071-32	48
3.0	110	12	143	71	143	2.4	48.950	-H450	071-32	54
2.8	118	11	154	66	154	1.5	52.715	-H320	071-32	51
2.6	123	11	160	64	160	1.6	54.750	-H450	071-32	54
2.3	139	9.7	181	56	181	1.6	61.875	-H450	071-32	54

3-stage gearboxes

Umrichterbetrieb							i	Produkt		
5 Hz -		- 20 Hz		- 120 Hz (1:24)						
n_{22} [r/min]	M_{22} [Nm]	n_{21} [r/min]	M_2 [Nm]	n_2 [r/min]	M_2 [Nm]	c		g500	MF□MA□□	
2.6	123	11	160	63	160	1.1	55.529	-H210	071-32	48
2.6	125	11	162	62	162	2.4	56.469	-H450	071-32	54
2.4	134	9.9	174	58	174	1.6	60.502	-H320	071-32	51
2.3	136	9.7	178	57	178	2.2	61.774	-H450	071-32	54
2.3	137	9.7	179	56	179	1.0	62.160	-H210	071-32	48
2.1	152	8.7	198	51	198	1.4	68.726	-H320	071-32	51
2.1	154	8.6	201	50	201	1.9	69.813	-H450	071-32	54
1.9	171	7.8	223	45	223	1.2	77.387	-H320	071-32	51
1.8	174	7.6	227	44	227	1.7	78.794	-H450	071-32	54
1.6	194	6.8	253	40	253	1.2	87.906	-H320	071-32	51
1.6	197	6.7	256	39	256	1.7	89.048	-H450	071-32	54
1.5	213	6.2	278	36	278	1.5	96.522	-H450	071-32	54
1.4	222	6.0	289	35	289	1.1	100.462	-H320	071-32	51
1.3	241	5.5	314	32	314	1.4	109.083	-H450	071-32	54
1.2	268	4.9	349	29	349	1.2	121.342	-H450	071-32	54
1.1	303	4.4	394	25	394	1.1	137.133	-H450	071-32	54



Selection tables, 4-pole motors

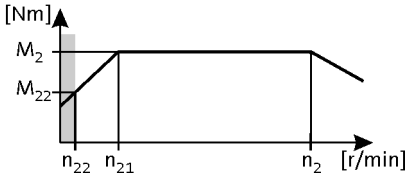

120 Hz: P_N = 1.5 kW

2-stage gearboxes

Umrichterbetrieb							i	Produkt		
5 Hz -		- 20 Hz		- 120 Hz (1:24)						
n_{22} [r/min]	M_{22} [Nm]	n_{21} [r/min]	M_2 [Nm]	n_2 [r/min]	M_2 [Nm]	c		g500	MF□MA□□	
25	18	105	23	602	23	2.9	5.733	-H140	071-42	45
25	18	102	24	586	24	2.6	5.887	-H100	071-42	42
23	19	96	25	550	25	2.8	6.272	-H140	071-42	45
23	20	93	26	536	26	2.4	6.440	-H100	071-42	42
18	25	75	32	431	32	2.6	8.000	-H140	071-42	45
18	25	73	33	420	33	2.1	8.214	-H100	071-42	42
16	28	66	37	381	37	2.0	9.068	-H100	071-42	42
15	30	61	39	352	39	3.1	9.799	-H210	071-42	48
15	30	61	39	352	39	2.3	9.800	-H140	071-42	45
14	31	60	41	343	41	1.9	10.063	-H100	071-42	42
14	33	56	43	323	43	3.1	10.677	-H320	071-42	51
14	33	56	43	322	43	3.1	10.720	-H210	071-42	48
13	35	53	46	304	46	1.7	11.360	-H100	071-42	42
13	35	52	47	299	47	2.1	11.554	-H140	071-42	45
12	36	51	47	295	47	3.1	11.680	-H320	071-42	51
12	37	50	48	288	48	2.9	12.000	-H210	071-42	48
12	37	50	49	285	49	3.1	12.128	-H320	071-42	51
12	39	48	51	273	51	2.0	12.640	-H140	071-42	45
12	39	47	51	273	51	1.5	12.653	-H100	071-42	42
11	41	45	53	260	53	3.1	13.268	-H320	071-42	51
11	42	44	55	252	55	2.8	13.673	-H210	071-42	48
10	43	43	56	248	56	3.1	13.905	-H450	071-42	54
10	43	43	56	247	56	1.8	13.957	-H140	071-42	45
10	44	41	58	238	58	1.3	14.490	-H100	071-42	42
9.7	46	40	60	232	60	2.9	14.898	-H320	071-42	51
9.5	47	39	62	225	62	2.5	15.306	-H210	071-42	48
9.4	47	39	62	223	62	1.2	15.500	-H100	071-42	42
9.2	48	38	63	220	63	3.1	15.714	-H450	071-42	54
9.0	49	37	65	214	65	1.6	16.122	-H140	071-42	45
8.7	51	36	67	206	67	2.4	16.750	-H210	071-42	48
8.6	52	36	68	204	68	2.9	16.923	-H320	071-42	51
8.2	54	34	72	194	72	1.1	17.750	-H100	071-42	42
8.1	54	34	72	194	72	1.5	17.802	-H140	071-42	45
7.9	56	33	74	189	74	2.6	18.250	-H320	071-42	51
7.7	57	32	76	184	76	2.1	18.750	-H210	071-42	48



Selection tables, 4-pole motors

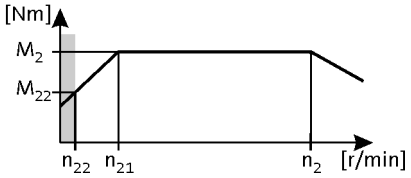

120 Hz: P_N = 1.5 kW

2-stage gearboxes

Umrichterbetrieb							i	Produkt		
5 Hz -		- 20 Hz		- 120 Hz (1:24)						
n_{22} [r/min]	M_{22} [Nm]	n_{21} [r/min]	M_2 [Nm]	n_2 [r/min]	M_2 [Nm]	c		g500	MF□MA□□	
7.3	60	30	80	175	80	1.3	19.750	-H140	071-42	45
7.0	63	29	84	166	84	2.6	20.731	-H320	071-42	51
6.7	67	28	88	158	88	1.8	21.802	-H210	071-42	48
6.6	67	28	88	158	88	1.2	21.808	-H140	071-42	45
6.5	68	27	89	156	89	2.6	22.170	-H450	071-42	54
6.1	73	25	96	145	96	2.3	23.754	-H320	071-42	51
5.9	75	25	98	141	98	1.6	24.405	-H210	071-42	48
5.8	76	24	100	139	100	1.1	24.829	-H140	071-42	45
5.8	77	24	101	138	101	2.6	25.056	-H450	071-42	54
5.4	83	22	109	128	109	2.5	26.983	-H320	071-42	51
5.3	83	22	109	127	109	1.7	27.119	-H210	071-42	48
5.3	84	22	110	126	110	1.1	27.415	-H140	071-42	45
5.3	84	22	111	125	111	2.4	27.578	-H450	071-42	54
4.9	90	20	119	117	119	2.2	29.548	-H320	071-42	51
4.8	93	20	122	114	122	1.5	30.357	-H210	071-42	48
4.7	95	19	126	111	126	2.4	31.167	-H450	071-42	54
4.3	103	18	135	103	135	2.0	33.564	-H320	071-42	51
4.1	107	17	141	98	141	1.3	35.095	-H210	071-42	48
4.1	109	17	144	97	144	2.2	35.689	-H450	071-42	54
3.8	117	16	154	90	154	1.4	38.238	-H320	071-42	51
3.7	120	15	158	88	158	1.1	39.286	-H210	071-42	48
3.6	123	15	162	86	162	2.5	40.333	-H450	071-42	54
3.4	130	14	172	81	172	1.0	42.593	-H210	071-42	48
3.3	132	14	174	80	174	1.8	43.313	-H450	071-42	54
3.3	133	14	175	79	175	1.6	43.436	-H320	071-42	51
3.1	142	13	187	74	187	1.1	46.407	-H320	071-42	51
3.0	146	13	192	72	192	1.0	47.679	-H210	071-42	48
3.0	150	12	197	71	197	1.8	48.950	-H450	071-42	54
2.8	161	11	212	65	212	1.1	52.715	-H320	071-42	51
2.6	167	11	221	63	221	1.2	54.750	-H450	071-42	54
2.3	189	9.7	249	56	249	1.2	61.875	-H450	071-42	54

3-stage gearboxes

Umrichterbetrieb							i	Produkt		
5 Hz -		- 20 Hz		- 120 Hz (1:24)						
n_{22} [r/min]	M_{22} [Nm]	n_{21} [r/min]	M_2 [Nm]	n_2 [r/min]	M_2 [Nm]	c		g500	MF□MA□□	
2.6	170	11	224	61	224	1.7	56.469	-H450	071-42	54
2.4	182	9.9	240	57	240	1.2	60.502	-H320	071-42	51
2.3	186	9.7	245	56	245	1.6	61.774	-H450	071-42	54
2.1	207	8.7	273	50	273	1.0	68.726	-H320	071-42	51



Selection tables, 4-pole motors

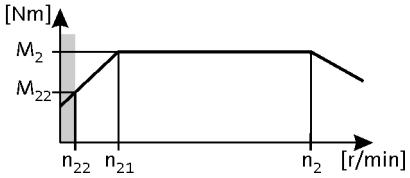

120 Hz: P_N = 1.5 kW

3-stage gearboxes

Umrichterbetrieb							i	Produkt		
5 Hz -		- 20 Hz		- 120 Hz (1:24)						
n_{22} [r/min]	M_{22} [Nm]	n_{21} [r/min]	M_2 [Nm]	n_2 [r/min]	M_2 [Nm]	c		g500	MF□MA□□	
2.1	210	8.6	277	49	277	1.4	69.813	-H450	071-42	54
1.8	237	7.6	313	44	313	1.2	78.794	-H450	071-42	54
1.6	268	6.7	353	39	353	1.2	89.048	-H450	071-42	54
1.5	291	6.2	383	36	383	1.1	96.522	-H450	071-42	54



Selection tables, 4-pole motors

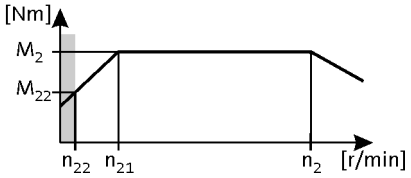

120 Hz: P_N = 2.2 kW

2-stage gearboxes

Umrichterbetrieb							i	Produkt		
5 Hz -		- 20 Hz		- 120 Hz (1:24)						
n_{22} [r/min]	M_{22} [Nm]	n_{21} [r/min]	M_2 [Nm]	n_2 [r/min]	M_2 [Nm]	c		g500	MF□MA□□	
25	25	105	33	611	33	2.3	5.733	-H140	080-32	45
25	26	102	34	595	34	1.8	5.887	-H100	080-32	42
23	27	96	37	558	37	2.2	6.272	-H140	080-32	45
23	28	93	38	544	38	1.7	6.440	-H100	080-32	42
18	35	75	47	438	47	1.9	8.000	-H140	080-32	45
18	36	73	48	426	48	1.5	8.214	-H100	080-32	42
16	40	66	53	386	53	1.4	9.068	-H100	080-32	42
15	43	61	57	357	57	2.4	9.799	-H210	080-32	48
15	43	61	57	357	57	1.7	9.800	-H140	080-32	45
14	44	60	59	348	59	1.3	10.063	-H100	080-32	42
14	47	56	62	328	62	3.2	10.677	-H320	080-32	51
14	47	56	62	327	62	2.3	10.720	-H210	080-32	48
13	50	53	66	308	66	1.1	11.360	-H100	080-32	42
13	50	52	67	303	67	1.4	11.554	-H140	080-32	45
12	51	51	68	300	68	3.0	11.680	-H320	080-32	51
12	52	50	70	292	70	2.0	12.000	-H210	080-32	48
12	53	50	71	289	71	2.7	12.128	-H320	080-32	51
12	55	48	74	277	74	1.4	12.640	-H140	080-32	45
12	55	47	74	277	74	1.0	12.653	-H100	080-32	42
11	58	45	77	264	77	2.6	13.268	-H320	080-32	51
11	60	44	80	256	80	1.9	13.673	-H210	080-32	48
10	61	43	81	251	81	1.3	13.957	-H140	080-32	45
9.7	65	40	87	235	87	2.6	14.898	-H320	080-32	51
9.5	67	39	89	229	89	1.7	15.306	-H210	080-32	48
9.0	70	37	94	217	94	1.1	16.122	-H140	080-32	45
8.7	73	36	98	209	98	1.6	16.750	-H210	080-32	48
8.6	74	36	99	207	99	2.2	16.923	-H320	080-32	51
8.1	78	34	104	197	104	1.0	17.802	-H140	080-32	45
7.9	80	33	106	192	106	2.2	18.250	-H320	080-32	51
7.7	82	32	109	187	109	1.5	18.750	-H210	080-32	48
7.5	84	31	112	182	112	3.0	19.250	-H450	080-32	54
7.0	91	29	121	169	121	1.9	20.731	-H320	080-32	51
6.7	95	28	127	161	127	1.3	21.802	-H210	080-32	48
6.5	97	27	129	158	129	2.6	22.170	-H450	080-32	54
6.1	104	25	138	147	138	1.7	23.754	-H320	080-32	51



Selection tables, 4-pole motors

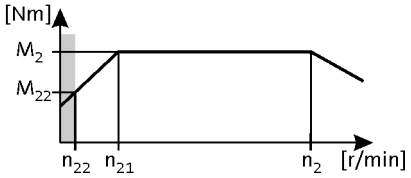

120 Hz: P_N = 2.2 kW

2-stage gearboxes

Umrichterbetrieb							i	Produkt		
5 Hz -		- 20 Hz		- 120 Hz (1:24)						
n_{22} [r/min]	M_{22} [Nm]	n_{21} [r/min]	M_2 [Nm]	n_2 [r/min]	M_2 [Nm]	c		g500	MF□MA□□	
5.9	107	25	142	143	142	1.1	24.405	-H210	080-32	48
5.8	109	24	146	140	146	2.3	25.056	-H450	080-32	54
5.4	118	22	157	130	157	1.7	26.983	-H320	080-32	51
5.3	118	22	158	129	158	1.1	27.119	-H210	080-32	48
5.3	120	22	161	127	161	2.4	27.578	-H450	080-32	54
4.9	129	20	172	119	172	1.6	29.548	-H320	080-32	51
4.8	133	20	177	115	177	1.0	30.357	-H210	080-32	48
4.7	136	19	182	112	182	2.1	31.167	-H450	080-32	54
4.3	147	18	195	104	195	1.4	33.564	-H320	080-32	51
4.1	156	17	208	98	208	1.9	35.689	-H450	080-32	54
3.6	176	15	235	87	235	1.8	40.333	-H450	080-32	54
3.3	189	14	252	81	252	1.2	43.313	-H450	080-32	54
3.0	214	12	285	72	285	1.2	48.950	-H450	080-32	54

3-stage gearboxes

Umrichterbetrieb							i	Produkt		
5 Hz -		- 20 Hz		- 120 Hz (1:24)						
n_{22} [r/min]	M_{22} [Nm]	n_{21} [r/min]	M_2 [Nm]	n_2 [r/min]	M_2 [Nm]	c		g500	MF□MA□□	
2.6	243	11	324	62	324	1.2	56.469	-H450	080-32	54
2.3	266	9.7	354	57	354	1.1	61.774	-H450	080-32	54



Selection tables, 4-pole motors

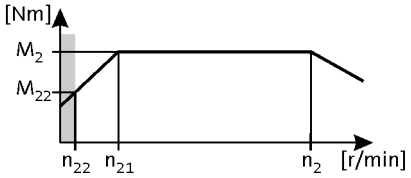

120 Hz: P_N = 3.0 kW

2-stage gearboxes

Umrichterbetrieb							i	Produkt		
5 Hz -		- 30 Hz		- 120 Hz (1:24)						
n_{22} [r/min]	M_{22} [Nm]	n_{21} [r/min]	M_2 [Nm]	n_2 [r/min]	M_2 [Nm]	c		g500	MF□MA□□	
25	34	157	46	607	46	1.7	5.733	-H140	080-42	45
25	35	153	47	591	47	1.3	5.887	-H100	080-42	42
24	36	149	48	576	48	3.1	6.045	-H450	080-42	54
23	38	144	50	555	50	1.6	6.272	-H140	080-42	45
23	39	140	51	540	51	1.2	6.440	-H100	080-42	42
22	40	136	53	526	53	3.1	6.613	-H450	080-42	54
18	48	113	64	435	64	1.4	8.000	-H140	080-42	45
18	49	110	66	424	66	1.1	8.214	-H100	080-42	42
16	54	99	72	384	72	1.0	9.068	-H100	080-42	42
15	59	92	78	355	78	1.8	9.799	-H210	080-42	48
15	59	92	78	355	78	1.2	9.800	-H140	080-42	45
15	60	90	80	349	80	3.1	9.965	-H450	080-42	54
14	64	84	85	326	85	2.4	10.677	-H320	080-42	51
14	64	84	86	325	86	1.7	10.720	-H210	080-42	48
13	68	80	90	309	90	3.1	11.262	-H450	080-42	54
13	69	78	92	301	92	1.1	11.554	-H140	080-42	45
12	70	77	93	298	93	2.2	11.680	-H320	080-42	51
12	72	75	96	290	96	1.5	12.000	-H210	080-42	48
12	73	74	97	287	97	2.0	12.128	-H320	080-42	51
12	74	73	98	283	98	3.1	12.320	-H450	080-42	54
11	80	68	106	262	106	1.9	13.268	-H320	080-42	51
11	82	66	109	255	109	1.4	13.673	-H210	080-42	48
10	83	65	111	250	111	2.9	13.905	-H450	080-42	54
9.7	89	60	119	234	119	1.9	14.898	-H320	080-42	51
9.5	92	59	122	227	122	1.2	15.306	-H210	080-42	48
9.2	94	57	126	222	126	2.7	15.714	-H450	080-42	54
8.7	100	54	134	208	134	1.2	16.750	-H210	080-42	48
8.6	101	53	135	206	135	1.6	16.923	-H320	080-42	51
8.5	102	53	136	204	136	2.5	17.033	-H450	080-42	54
7.9	109	49	146	191	146	1.6	18.250	-H320	080-42	51
7.7	112	48	150	186	150	1.1	18.750	-H210	080-42	48
7.5	115	47	154	181	154	2.2	19.250	-H450	080-42	54
7.0	124	43	166	168	166	1.4	20.731	-H320	080-42	51
6.5	133	41	177	157	177	1.9	22.170	-H450	080-42	54
6.1	142	38	190	147	190	1.3	23.754	-H320	080-42	51



Selection tables, 4-pole motors

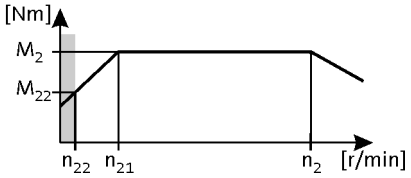

120 Hz: P_N = 3.0 kW

2-stage gearboxes

Umrichterbetrieb							i	Produkt		
5 Hz -		- 30 Hz		- 120 Hz (1:24)						
n_{22} [r/min]	M_{22} [Nm]	n_{21} [r/min]	M_2 [Nm]	n_2 [r/min]	M_2 [Nm]	c		g500	MF□MA□□	
5.8	150	36	200	139	200	1.7	25.056	-H450	080-42	54
5.4	162	33	216	129	216	1.3	26.983	-H320	080-42	51
5.3	165	33	220	126	220	1.8	27.578	-H450	080-42	54
4.9	177	31	236	118	236	1.2	29.548	-H320	080-42	51
4.7	187	29	249	112	249	1.6	31.167	-H450	080-42	54
4.3	201	27	268	104	268	1.0	33.564	-H320	080-42	51
4.1	214	25	285	98	285	1.4	35.689	-H450	080-42	54
3.6	242	22	322	86	322	1.3	40.333	-H450	080-42	54



Selection tables, 4-pole motors

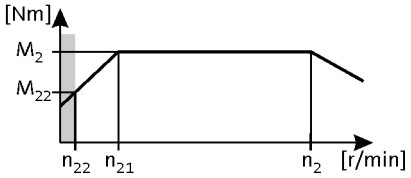

120 Hz: P_N = 4.0 kW

2-stage gearboxes

Umrichterbetrieb							i	Produkt		
5 Hz -		- 20 Hz		- 120 Hz (1:24)						
n_{22} [r/min]	M_{22} [Nm]	n_{21} [r/min]	M_2 [Nm]	n_2 [r/min]	M_2 [Nm]	c		g500	MF□MA□□	
25	43	105	61	607	61	1.3	5.733	-H140	090-32	45
24	45	99	64	576	64	2.9	6.045	-H450	090-32	54
23	47	96	67	555	67	1.2	6.272	-H140	090-32	45
22	49	91	70	526	70	2.9	6.613	-H450	090-32	54
18	60	75	85	435	85	1.0	8.000	-H140	090-32	45
15	74	60	106	349	106	2.7	9.965	-H450	090-32	54
14	80	56	114	326	114	1.8	10.677	-H320	090-32	51
13	84	53	120	309	120	2.5	11.262	-H450	090-32	54
12	87	51	124	298	124	1.7	11.680	-H320	090-32	51
12	90	50	129	287	129	1.5	12.128	-H320	090-32	51
12	92	49	131	283	131	2.4	12.320	-H450	090-32	54
11	99	45	141	262	141	1.4	13.268	-H320	090-32	51
11	102	44	146	255	146	1.0	13.673	-H210	090-32	48
10	104	43	148	250	148	2.2	13.905	-H450	090-32	54
9.7	111	40	159	234	159	1.4	14.898	-H320	090-32	51
9.2	117	38	167	222	167	2.0	15.714	-H450	090-32	54
8.6	126	36	180	206	180	1.2	16.923	-H320	090-32	51
8.5	127	35	181	204	181	1.9	17.033	-H450	090-32	54
7.9	136	33	194	191	194	1.2	18.250	-H320	090-32	51
7.5	144	31	205	181	205	1.7	19.250	-H450	090-32	54
7.0	155	29	221	168	221	1.0	20.731	-H320	090-32	51
6.5	165	27	236	157	236	1.4	22.170	-H450	090-32	54
5.8	187	24	267	139	267	1.3	25.056	-H450	090-32	54
5.3	206	22	294	126	294	1.3	27.578	-H450	090-32	54
4.7	232	19	332	112	332	1.2	31.167	-H450	090-32	54
4.1	266	17	380	98	380	1.0	35.689	-H450	090-32	54
3.6	301	15	430	86	430	1.0	40.333	-H450	090-32	54



Selection tables, 4-pole motors

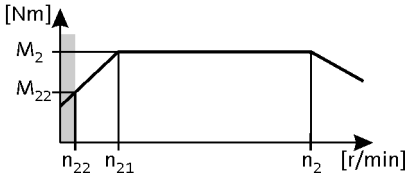

120 Hz: P_N = 5.5 kW

2-stage gearboxes

Umrichterbetrieb							i	Produkt		
5 Hz -		- 20 Hz		- 120 Hz (1:24)						
n_{22} [r/min]	M_{22} [Nm]	n_{21} [r/min]	M_2 [Nm]	n_2 [r/min]	M_2 [Nm]	c		g500	MF□MA□□	
24	61	99	87	583	87	2.8	6.045	-H450	100-12	54
22	67	91	96	533	96	2.6	6.613	-H450	100-12	54
15	101	60	144	354	144	2.0	9.965	-H450	100-12	54
10	141	43	201	254	201	1.6	13.905	-H450	100-12	54
9.7	151	40	215	237	215	1.0	14.898	-H320	100-12	51
9.2	159	38	227	224	227	1.5	15.714	-H450	100-12	54
8.5	172	35	246	207	246	1.4	17.033	-H450	100-12	54
7.5	195	31	278	183	278	1.2	19.250	-H450	100-12	54
6.5	224	27	320	159	320	1.1	22.170	-H450	100-12	54



Selection tables, 4-pole motors

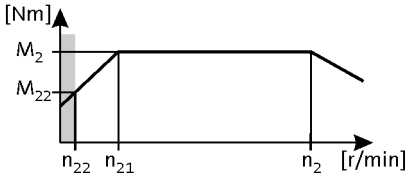

120 Hz: P_N = 7.5 kW

2-stage gearboxes

Umrichterbetrieb							i	Produkt		
5 Hz -		- 20 Hz		- 120 Hz (1:24)						
n_{22} [r/min]	M_{22} [Nm]	n_{21} [r/min]	M_2 [Nm]	n_2 [r/min]	M_2 [Nm]	c		g500	MF□MA□□	
24	84	99	120	581	120	2.0	6.045	-H450	100-32	54
22	92	91	131	532	131	1.9	6.613	-H450	100-32	54



Dimensions, notes

Notes on the dimensions

The following legend shows the layout of the dimension sheets.

Product gearbox

g500-H100

Driven shaft design

Abmessungen mit Vollwelle

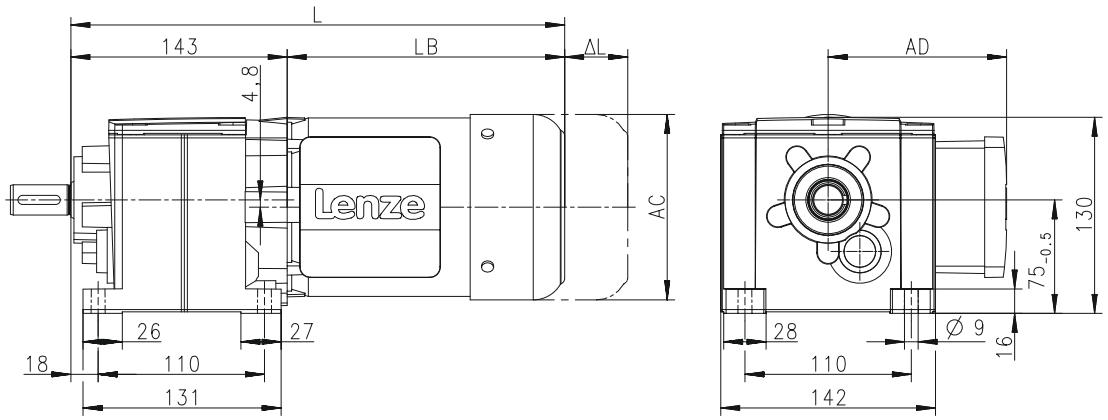

Product Motor

Produkt			MD□MA□□							
			063-12	063-32	063-42	071-32	071-42	080-32	080-42	090-32
Abmessungen										
Gesamtlänge	**L**	**[mm]**		326		346		369		402
Länge Motor	**LB**	**[mm]**		183		203		226		259
Länge Motoranbauten	**Δ L**	**[mm]**		170		165		183		181
Motordurchmesser	**AC**	**[mm]**		123		139		156		176
Abstand Motor/Anschluss	**AD**	**[mm]**		100		109		150		157

Distance of motor centre to the end of terminal box

Total length of the drive without built-on accessories

Motor diameter

Motor length without built-on accessories

Additional length of the built-on accessories (longest version)

6.3



Dimensions, 4-pole motors

g500-H45

Dimensions with solid shaft

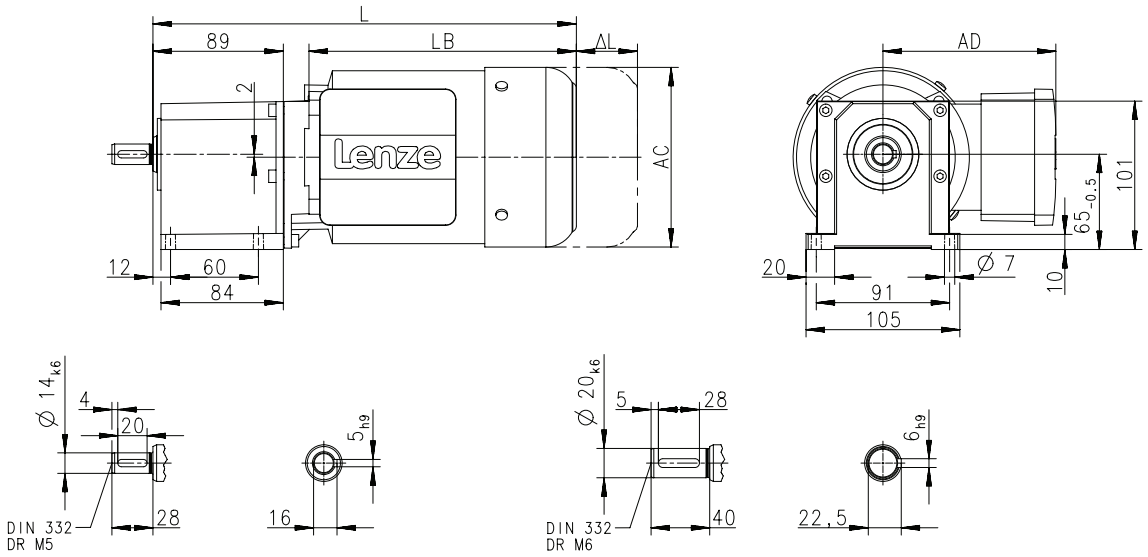

8800067-00

Produkt			MF□MA□□	
			063-32	063-42
Abmessungen				
Gesamtlänge	**L**	**[mm]**	288	
Länge Motor	**LB**	**[mm]**	183	
Länge Motoranbauten	**Δ L**	**[mm]**	170	
Motordurchmesser	**AC**	**[mm]**	123	
Abstand Motor/Anschluss	**AD**	**[mm]**	100	



Dimensions, 4-pole motors

g500-H45

Dimensions with solid shaft and centering

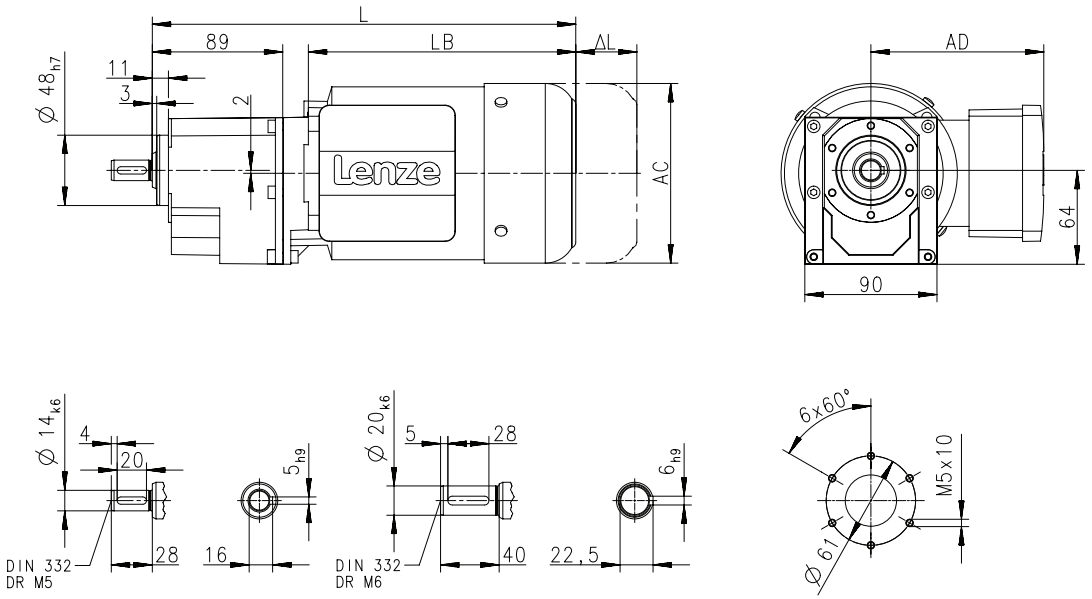

Produkt			MF□MA□□	
			063-32	063-42
Abmessungen				
Gesamtlänge	**L**	**[mm]**	288	
Länge Motor	**LB**	**[mm]**	183	
Länge Motoranbauten	**Δ L**	**[mm]**	170	
Motordurchmesser	**AC**	**[mm]**	123	
Abstand Motor/Anschluss	**AD**	**[mm]**	100	



Dimensions, 4-pole motors

g500-H45

Dimensions with solid shaft and Flange

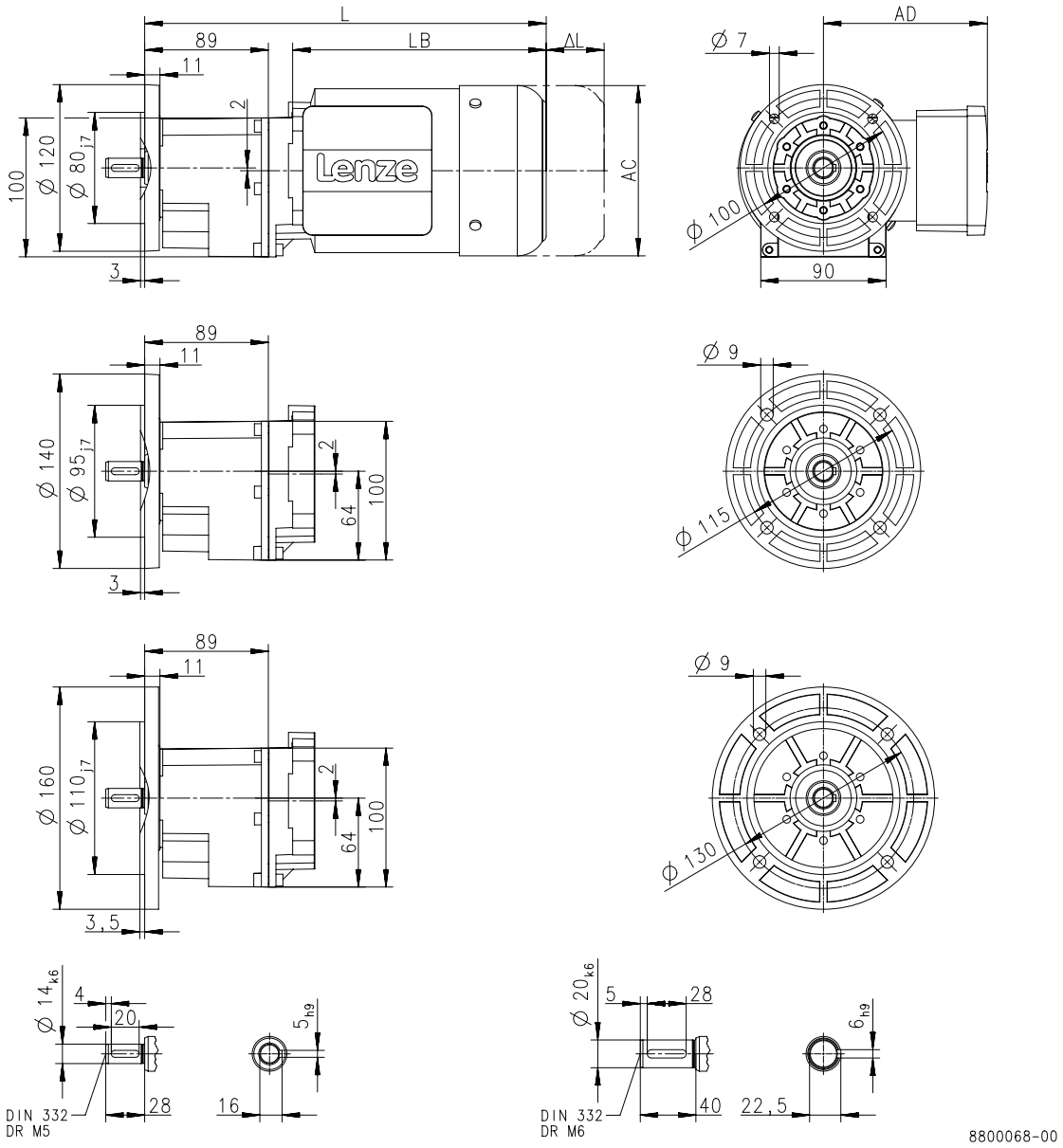

Produkt			MF□MA□□	
			063-32	063-42
Abmessungen				
Gesamtlänge	**L**	**[mm]**	288	
Länge Motor	**LB**	**[mm]**	183	
Länge Motoranbauten	**Δ L**	**[mm]**	170	
Motordurchmesser	**AC**	**[mm]**	123	
Abstand Motor/Anschluss	**AD**	**[mm]**	100	



Dimensions, 4-pole motors

g500-H100

Dimensions with solid shaft

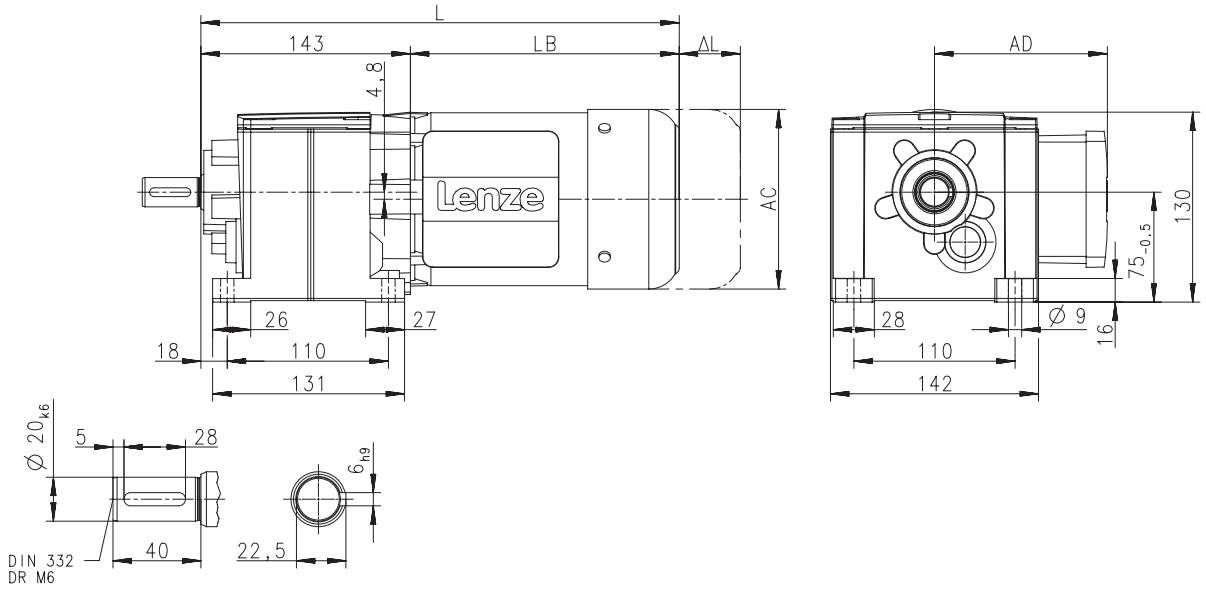

Produkt			MF□MA□□					
			063-32	063-42	071-32	071-42	080-32	080-42
Abmessungen								
Gesamtlänge	**L**	**[mm]**	326		346		369	
Länge Motor	**LB**	**[mm]**	183		203		226	
Länge Motoranbauten	**Δ L**	**[mm]**	170		165		183	
Motordurchmesser	**AC**	**[mm]**	123		139		156	
Abstand Motor/Anschluss	**AD**	**[mm]**	100		109		150	



Dimensions, 4-pole motors

g500-H100

Dimensions with solid shaft and centering

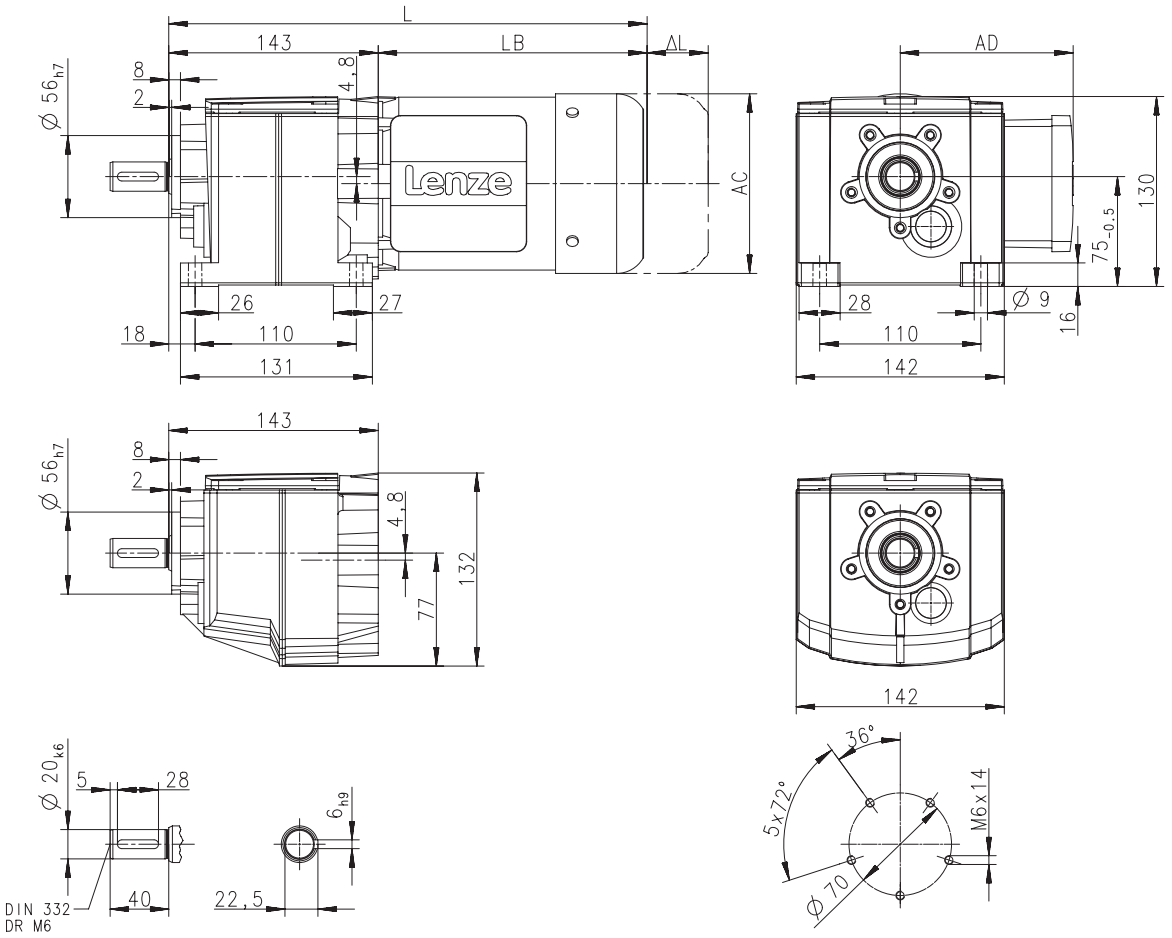

Produkt			MF□MA□□					
			063-32	063-42	071-32	071-42	080-32	080-42
Abmessungen								
Gesamtlänge	**L**	**[mm]**	326		346		369	
Länge Motor	**LB**	**[mm]**	183		203		226	
Länge Motoranbauten	**Δ L**	**[mm]**	170		165		183	
Motordurchmesser	**AC**	**[mm]**	123		139		156	
Abstand Motor/Anschluss	**AD**	**[mm]**	100		109		150	



Dimensions, 4-pole motors

g500-H100

Dimensions with solid shaft and Flange

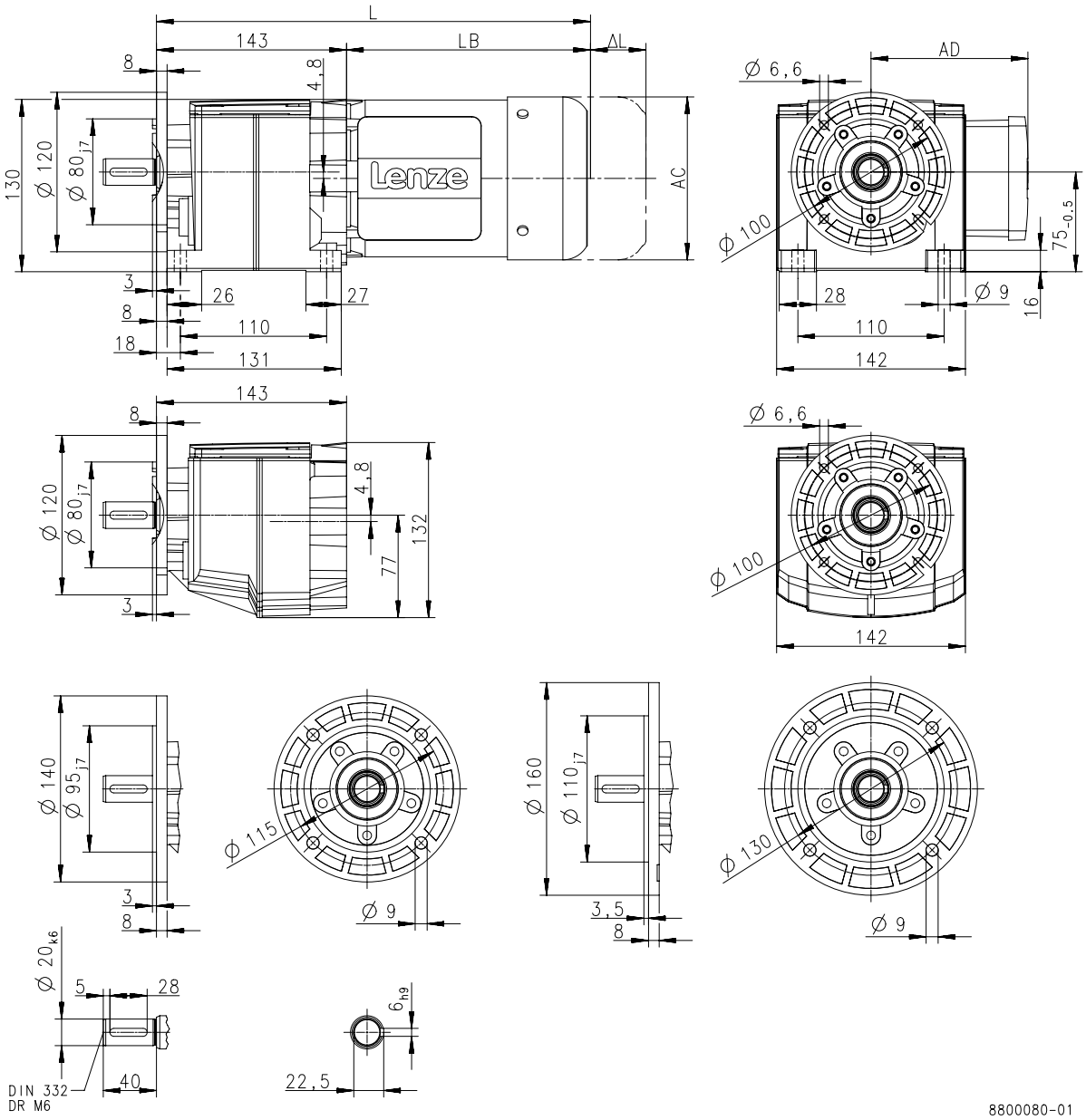

Produkt			MF□MA□□					
			063-32	063-42	071-32	071-42	080-32	080-42
Abmessungen								
Gesamtlänge	**L**	**[mm]**	326		346		369	
Länge Motor	**LB**	**[mm]**	183		203		226	
Länge Motoranbauten	**Δ L**	**[mm]**	170		165		183	
Motordurchmesser	**AC**	**[mm]**	123		139		156	
Abstand Motor/Anschluss	**AD**	**[mm]**	100		109		150	



Dimensions, 4-pole motors

g500-H140

Dimensions with solid shaft

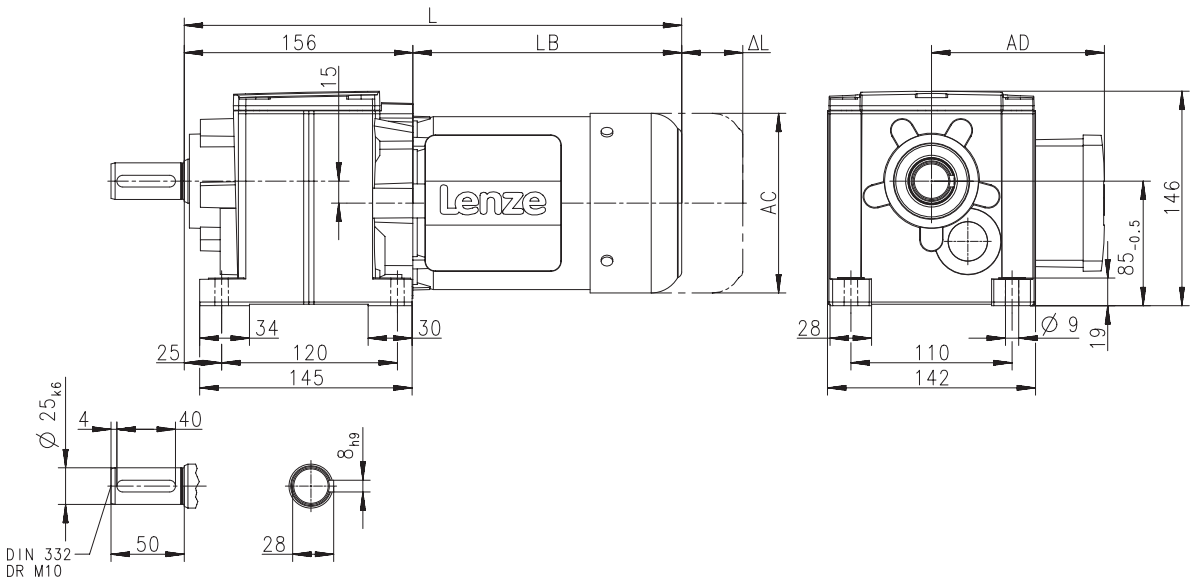

8800091-00

Produkt			MF□MA□□						
			063-32	063-42	071-32	071-42	080-32	080-42	090-32
Abmessungen									
Gesamtlänge	**L**	**[mm]**	339		359		382		430
Länge Motor	**LB**	**[mm]**	183		203		226		274
Länge Motoranbauten	**Δ L**	**[mm]**	170		165		183		181
Motordurchmesser	**AC**	**[mm]**	123		139		156		176
Abstand Motor/Anschluss	**AD**	**[mm]**	100		109		150		157



Dimensions, 4-pole motors

g500-H140

Dimensions with solid shaft and centering

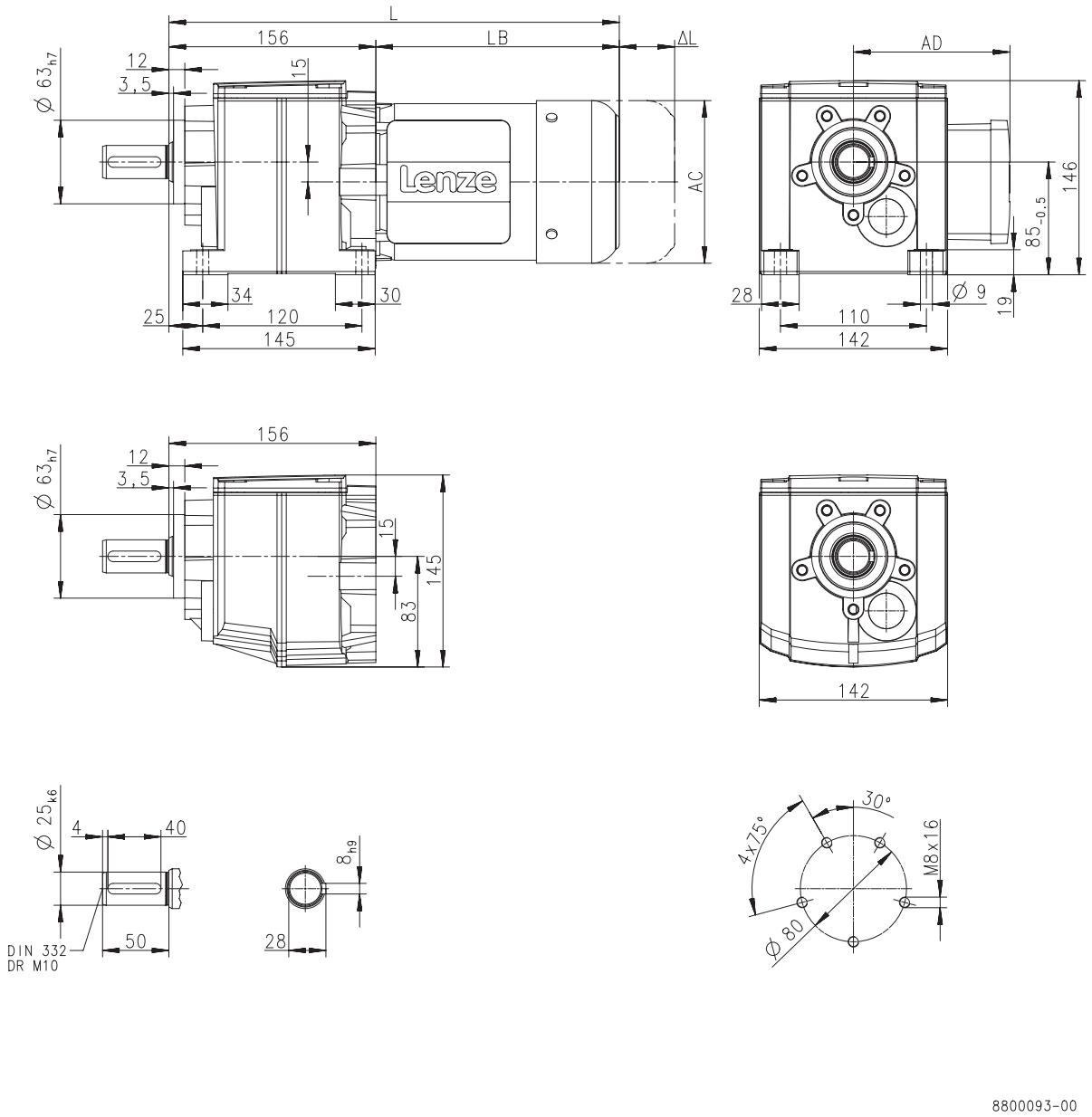

Produkt			MF□MA□□						
			063-32	063-42	071-32	071-42	080-32	080-42	090-32
Abmessungen									
Gesamtlänge	**L**	**[mm]**	339		359		382		430
Länge Motor	**LB**	**[mm]**	183		203		226		274
Länge Motoranbauten	**Δ L**	**[mm]**	170		165		183		181
Motordurchmesser	**AC**	**[mm]**	123		139		156		176
Abstand Motor/Anschluss	**AD**	**[mm]**	100		109		150		157



Dimensions, 4-pole motors

g500-H140

Dimensions with solid shaft and Flange

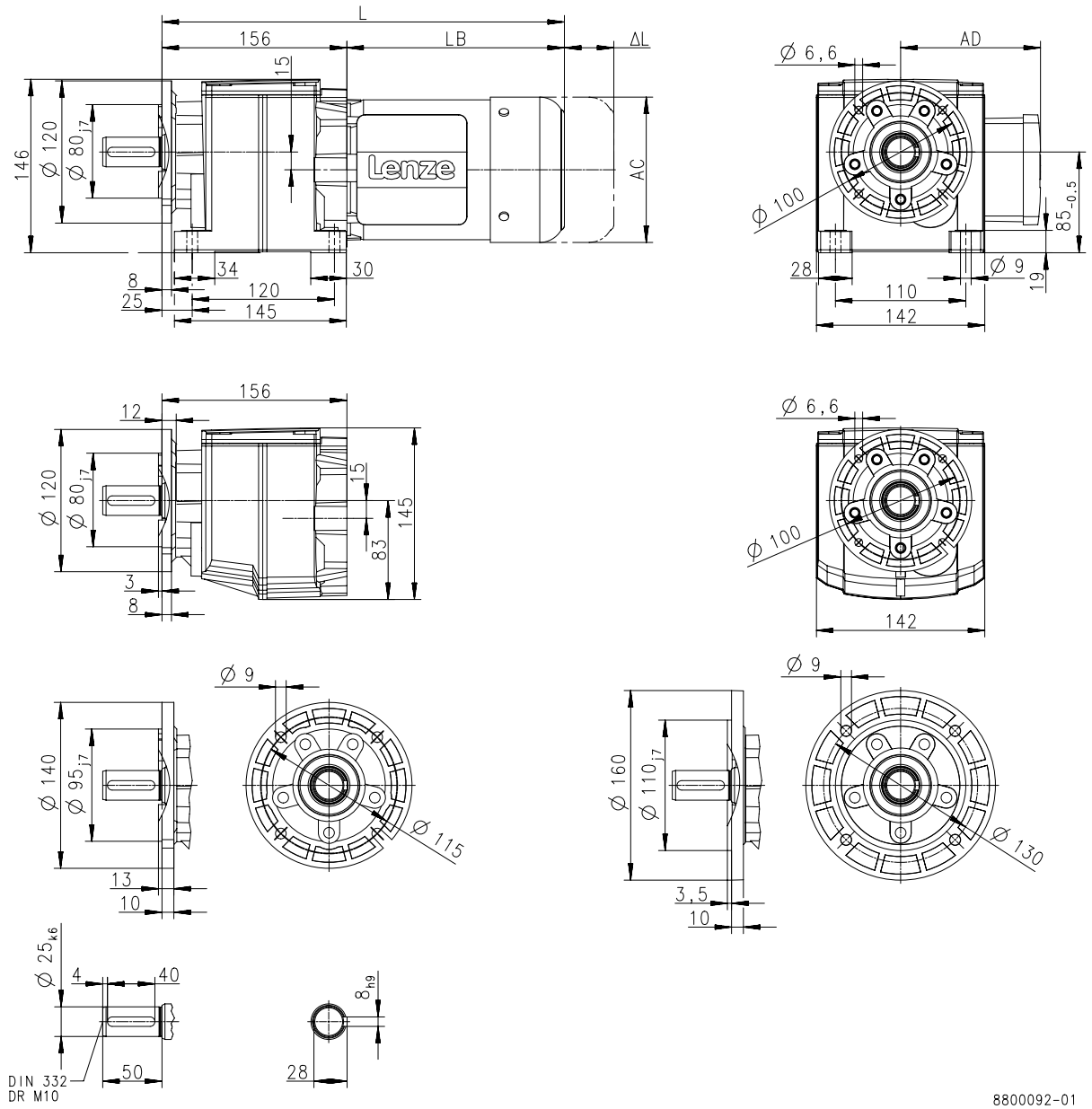

Produkt			MF□MA□□						
			063-32	063-42	071-32	071-42	080-32	080-42	090-32
Abmessungen									
Gesamtlänge	**L**	**[mm]**	339		359		382		430
Länge Motor	**LB**	**[mm]**	183		203		226		274
Länge Motoranbauten	**Δ L**	**[mm]**	170		165		183		181
Motordurchmesser	**AC**	**[mm]**	123		139		156		176
Abstand Motor/Anschluss	**AD**	**[mm]**	100		109		150		157



Dimensions, 4-pole motors

g500-H210

Dimensions with solid shaft

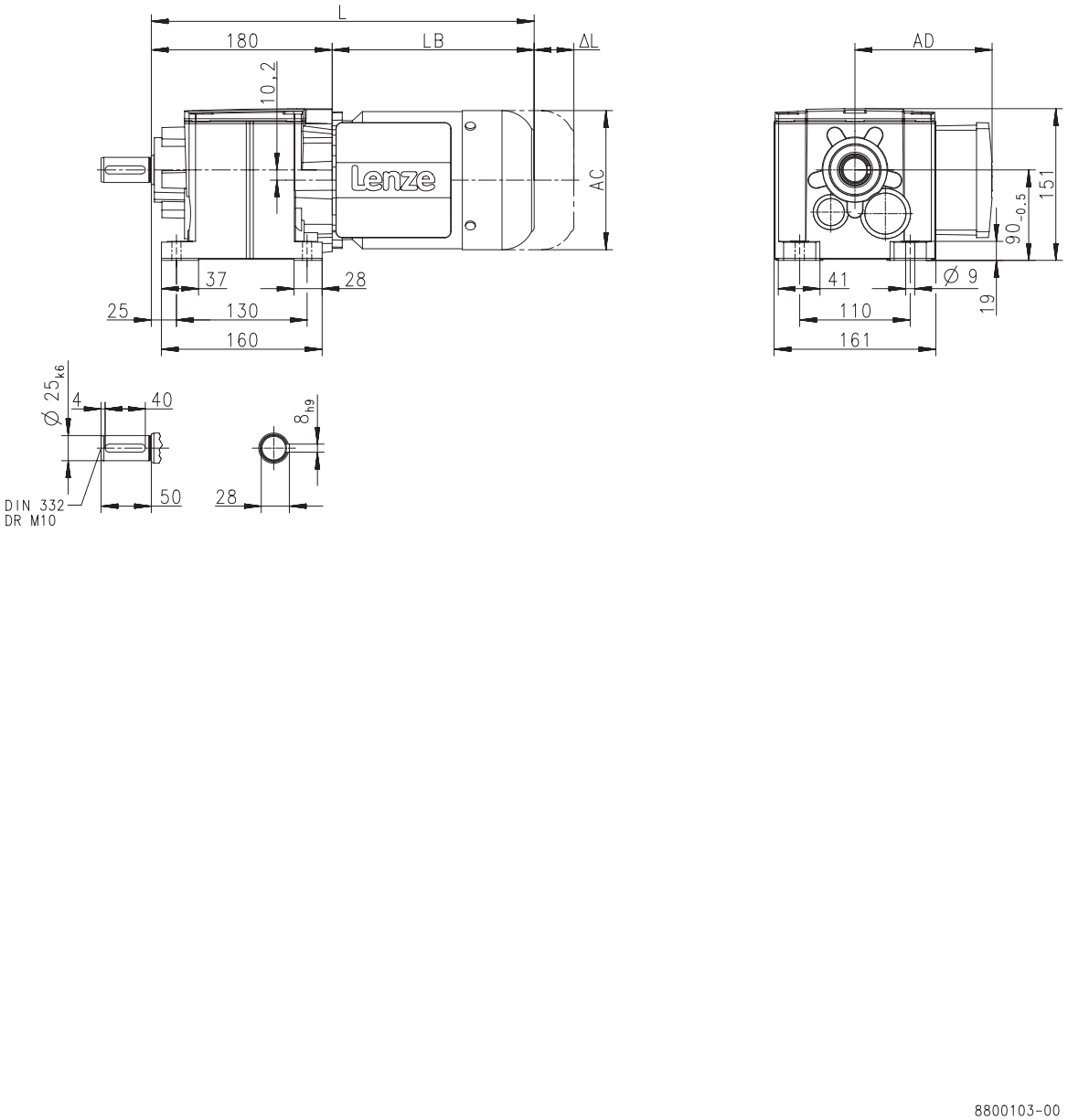

Produkt			MF□MA□□						
			063-32	063-42	071-32	071-42	080-32	080-42	090-32
Abmessungen									
Gesamtlänge	**L**	**[mm]**	363		383		406		454
Länge Motor	**LB**	**[mm]**	183		203		226		274
Länge Motoranbauten	**Δ L**	**[mm]**	170		165		183		181
Motordurchmesser	**AC**	**[mm]**	123		139		156		176
Abstand Motor/Anschluss	**AD**	**[mm]**	100		109		150		157



Dimensions, 4-pole motors

g500-H210

Dimensions with solid shaft and centering

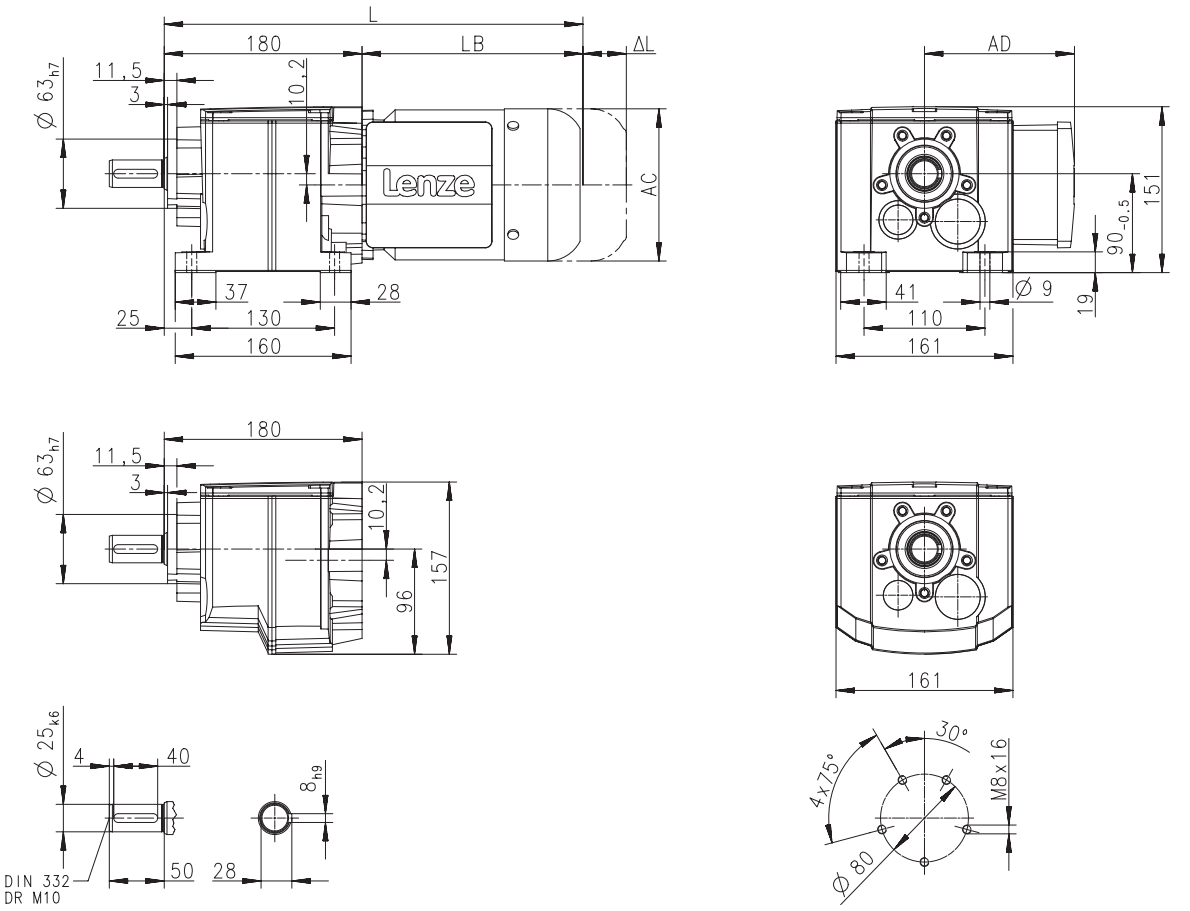

8800105-00

Produkt			MF□MA□□						
			063-32	063-42	071-32	071-42	080-32	080-42	090-32
Abmessungen									
Gesamtlänge	**L**	**[mm]**	363		383		406		454
Länge Motor	**LB**	**[mm]**	183		203		226		274
Länge Motoranbauten	**Δ L**	**[mm]**	170		165		183		181
Motordurchmesser	**AC**	**[mm]**	123		139		156		176
Abstand Motor/Anschluss	**AD**	**[mm]**	100		109		150		157



Dimensions, 4-pole motors

g500-H210

Dimensions with solid shaft and Flange

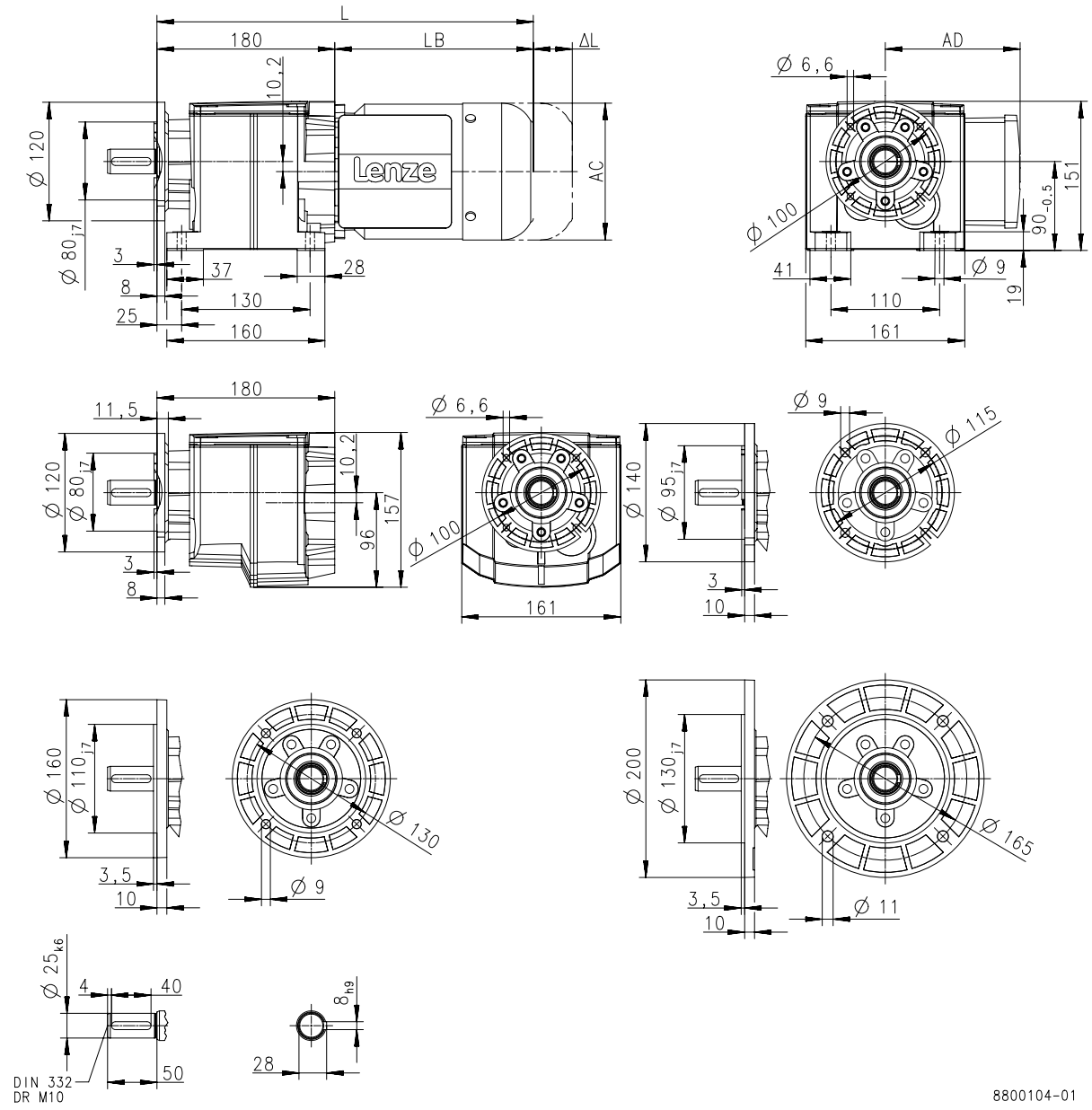

Produkt			MF□MA□□						
			063-32	063-42	071-32	071-42	080-32	080-42	090-32
Abmessungen									
Gesamtlänge	**L**	**[mm]**	363		383		406		454
Länge Motor	**LB**	**[mm]**	183		203		226		274
Länge Motoranbauten	**Δ L**	**[mm]**	170		165		183		181
Motordurchmesser	**AC**	**[mm]**	123		139		156		176
Abstand Motor/Anschluss	**AD**	**[mm]**	100		109		150		157



Dimensions, 4-pole motors

g500-H320

Dimensions with solid shaft

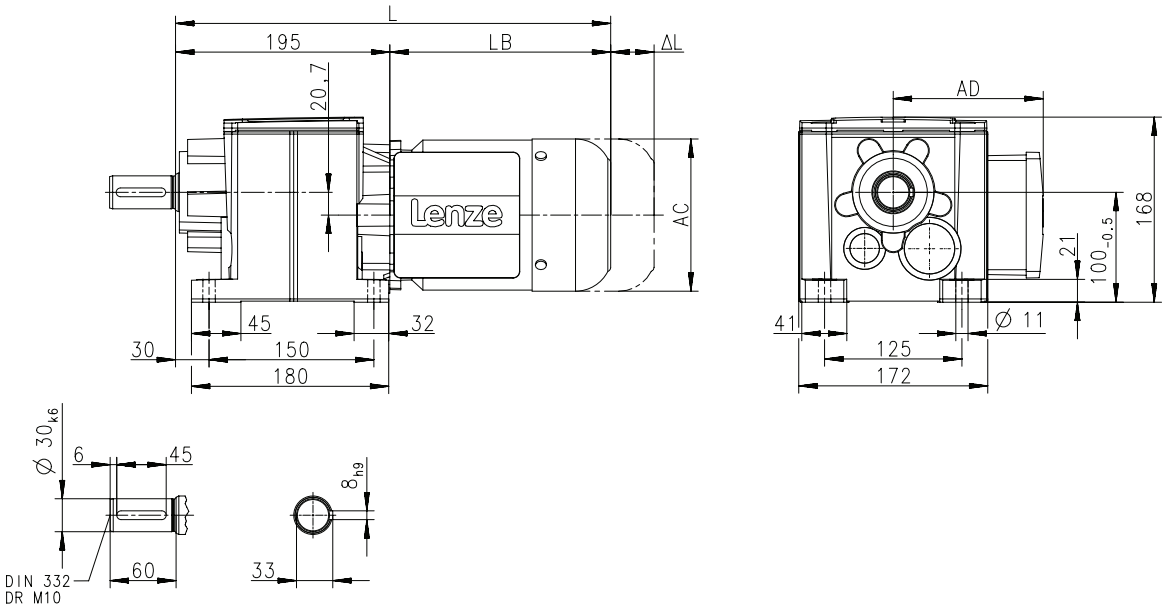

8800115-00

Produkt			MF□MA□□							
			063-32	063-42	071-32	071-42	080-32	080-42	090-32	100-12
Abmessungen										
Gesamtlänge	**L**	**[mm]**	383		403		426		474	521
Länge Motor	**LB**	**[mm]**	183		203		226		274	321
Länge Motoranbauten	**Δ L**	**[mm]**	170		165		183		181	170
Motordurchmesser	**AC**	**[mm]**	123		139		156		176	194
Abstand Motor/Anschluss	**AD**	**[mm]**	100		109		150		157	166



Dimensions, 4-pole motors

g500-H320

Dimensions with solid shaft and centering

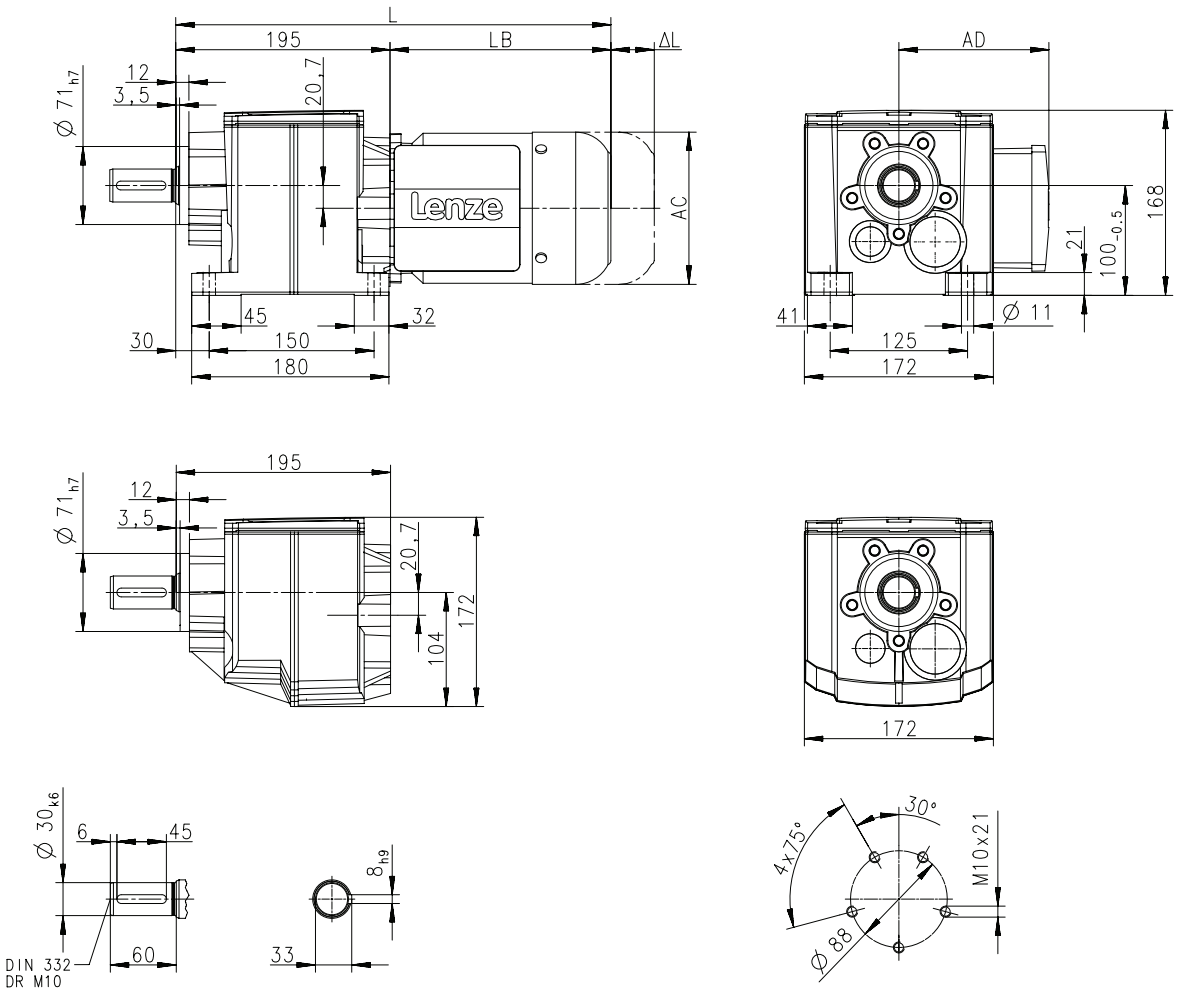

Produkt			MF□MA□□							
			063-32	063-42	071-32	071-42	080-32	080-42	090-32	100-12
Abmessungen										
Gesamtlänge	**L**	**[mm]**	383		403		426		474	521
Länge Motor	**LB**	**[mm]**	183		203		226		274	321
Länge Motoranbauten	**Δ L**	**[mm]**	170		165		183		181	170
Motordurchmesser	**AC**	**[mm]**	123		139		156		176	194
Abstand Motor/Anschluss	**AD**	**[mm]**	100		109		150		157	166



Dimensions, 4-pole motors

g500-H320

Dimensions with solid shaft and Flange

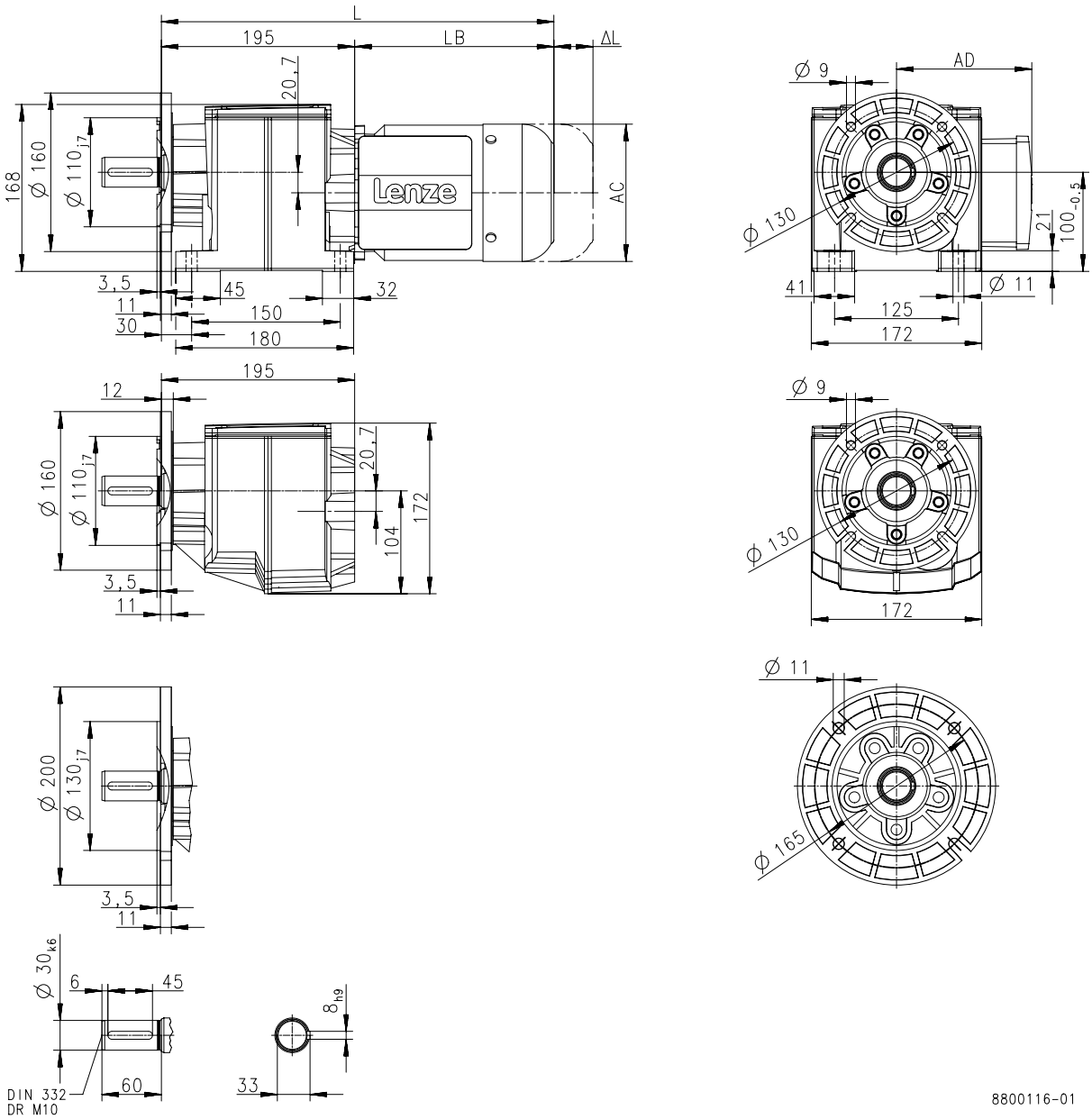

Produkt			MF□MA□□							
			063-32	063-42	071-32	071-42	080-32	080-42	090-32	100-12
Abmessungen										
Gesamtlänge	**L**	**[mm]**	383		403		426		474	521
Länge Motor	**LB**	**[mm]**	183		203		226		274	321
Länge Motoranbauten	**Δ L**	**[mm]**	170		165		183		181	170
Motordurchmesser	**AC**	**[mm]**	123		139		156		176	194
Abstand Motor/Anschluss	**AD**	**[mm]**	100		109		150		157	166



Dimensions, 4-pole motors

g500-H450

Dimensions with solid shaft

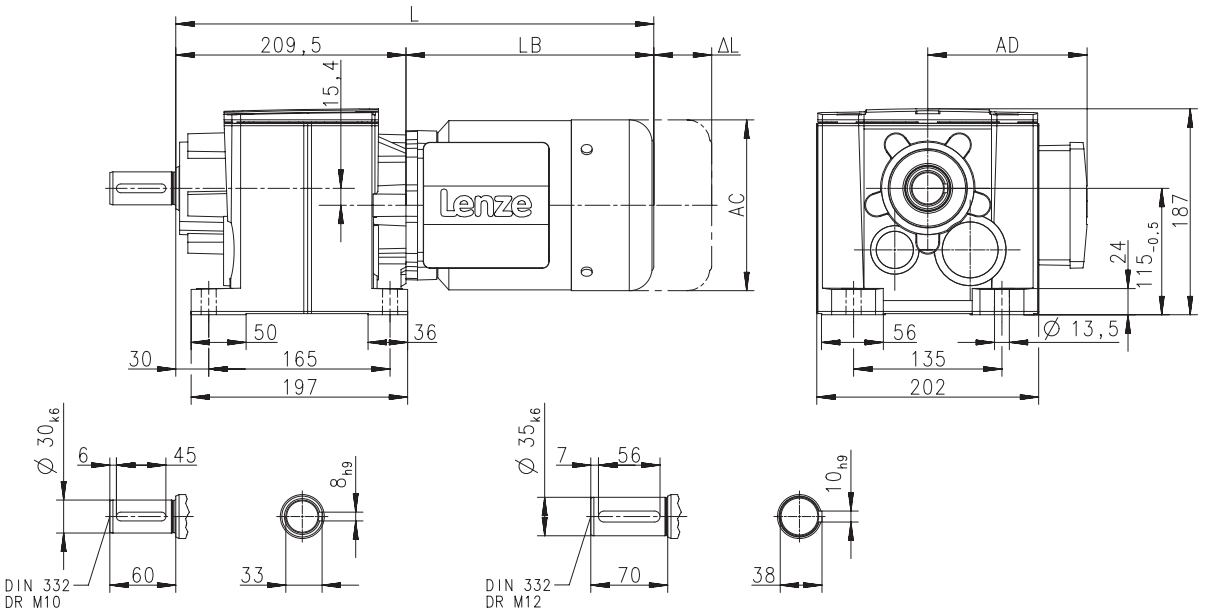

8800127-00

Produkt			MF□MA□□								
			063-32	063-42	071-32	071-42	080-32	080-42	090-32	100-12	100-32
Abmessungen											
Gesamtlänge	**L**	**[mm]**	393		413		436		484	531	
Länge Motor	**LB**	**[mm]**	183		203		226		274	321	
Länge Motoranbauten	**Δ L**	**[mm]**	170		165		183		181	170	
Motordurchmesser	**AC**	**[mm]**	123		139		156		176	194	
Abstand Motor/Anschluss	**AD**	**[mm]**	100		109		150		157	166	



Dimensions, 4-pole motors

g500-H450

Dimensions with solid shaft and centering

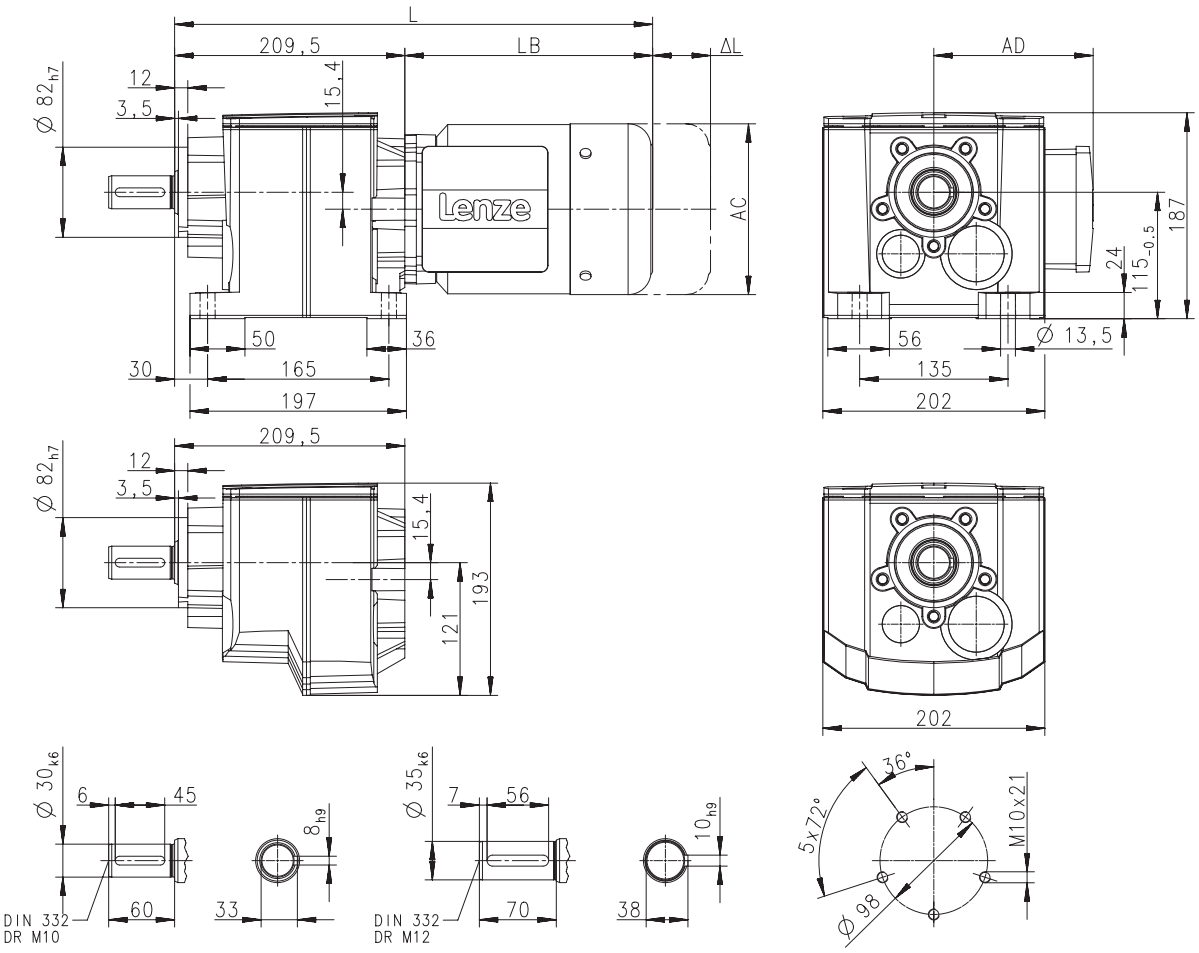

Produkt			MF□MA□□								
			063-32	063-42	071-32	071-42	080-32	080-42	090-32	100-12	100-32
Abmessungen											
Gesamtlänge	**L**	**[mm]**	393		413		436		484	531	
Länge Motor	**LB**	**[mm]**	183		203		226		274	321	
Länge Motoranbauten	**Δ L**	**[mm]**	170		165		183		181	170	
Motordurchmesser	**AC**	**[mm]**	123		139		156		176	194	
Abstand Motor/Anschluss	**AD**	**[mm]**	100		109		150		157	166	



Dimensions, 4-pole motors

g500-H450

Dimensions with solid shaft and Flange

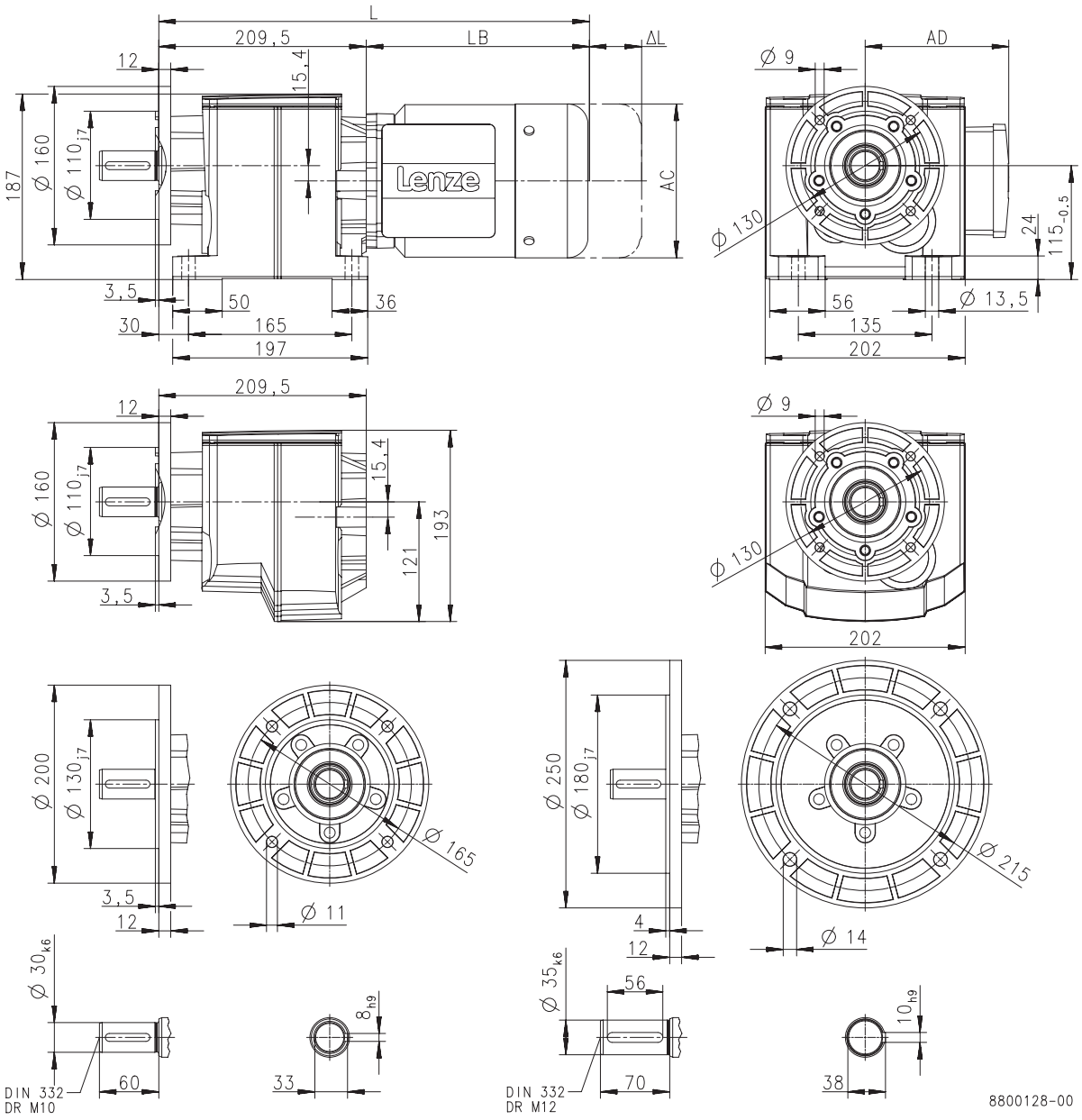

Produkt			MF□MA□□								
			063-32	063-42	071-32	071-42	080-32	080-42	090-32	100-12	100-32
Abmessungen											
Gesamtlänge	**L**	**[mm]**	393		413		436		484	531	
Länge Motor	**LB**	**[mm]**	183		203		226		274	321	
Länge Motoranbauten	**Δ L**	**[mm]**	170		165		183		181	170	
Motordurchmesser	**AC**	**[mm]**	123		139		156		176	194	
Abstand Motor/Anschluss	**AD**	**[mm]**	100		109		150		157	166	



Weights, 4-pole motors

2-stage gearboxes

				MF□MA□□					
				063-32 063-42	071-32 071-42	080-32 080-42	090-32	100-12	100-32
g500	-H45	m	[kg]	5.8					
	-H100	m	[kg]	7.6	9.6	14			
	-H140	m	[kg]	8.7	11	15	22		
	-H210	m	[kg]	10	12	16	23		
	-H320	m	[kg]	12	14	18	25	34	
	-H450	m	[kg]	15	17	22	28	37	

3-stage gearboxes

				MF□MA□□			
				063-32 063-42	071-32	071-42	080-32
g500	-H210	m	[kg]	10	12		
	-H320	m	[kg]	12	14		
	-H450	m	[kg]	15	17		22



Surface and corrosion protection

For optimum protection of geared motors against ambient conditions, the surface and corrosion protection system (OKS) offers tailor-made solutions.

Various surface coatings combined with other protective measures ensure that the geared motors operate reliably even at high air humidity, in outdoor installations or in the presence of atmospheric impurities. Any colour from the RAL Classic collection can be chosen for the top coat. The geared motors are also available unpainted (no surface and corrosion protection).

Surface and corrosion protection	Applications	Measures
OKS-G (primed)	• Dependent on subsequent top coat applied	• 2K PUR priming coat (grey) • Zinc-coated screws • Rust-free breather elements Optional measures • Stainless steel nameplate
OKS-S (small)	• Standard applications • Internal installation in heated buildings • Air humidity up to 90%	• Surface coating as per corrosivity category C1 (in line with EN 12944-2) • Zinc-coated screws • Rust-free breather elements Optional measures • Stainless steel nameplate
OKS-M (medium)	• Internal installation in non-heated buildings • Covered, protected external installation • Air humidity up to 95%	• Surface coating as per corrosivity category C2 (in line with EN 12944-2) • Zinc-coated screws • Rust-free breather elements Optional measures • Stainless steel shaft • Stainless steel nameplate • Rust-free shrink disc (on request)
OKS-L (large)	• External installation • Air humidity above 95% • Chemical industry plants • Food industry	• Surface coating as per corrosivity category C3 (in line with EN 12944-2) • Blower cover and B end shield additionally primed • Cable glands with gaskets • Corrosion-resistant brake with cover ring, stainless friction plate, and chrome-plated armature plate (on request) • All screws/screw plugs zinc-coated • Stainless breather elements • Threaded holes that are not used are closed by means of plastic plugs Optional measures • Sealed recesses on motor (on request) • Stainless steel shaft • Stainless steel nameplate • Rust-free shrink disc (on request) • Additional priming coat on cast iron fan • Oil expansion tank and torque plates painted separately and supplied loose



Surface and corrosion protection

Structure of surface coating

Surface and corrosion protection	Corrosivity category	Surface coating	Colour
	DIN EN ISO 12944-2	Structure	
Without OKS(uncoated)		Dipping primed gearbox	
OKS-G (primed)		Dipping primed gearbox 2K PUR priming coat	
OKS-S (small)	C1	Dipping primed gearbox 2K-PUR top coat	Standard: RAL 7012 Optional: RAL Classic
OKS-M (medium)	C2	Dipping primed gearbox 2K PUR priming coat 2K-PUR top coat	
OKS-L (large)	C3		



g500-H helical gearbox

45 to 450 Nm

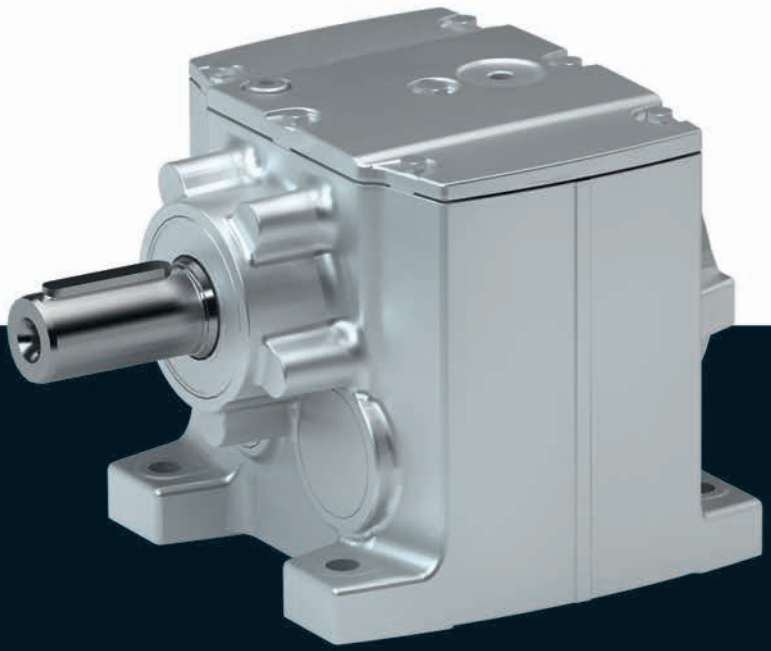

g500-H helical gearbox

Contents

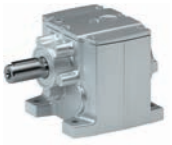

General information	List of abbreviations	6.3 - 5
	Product information	6.3 - 6
	Equipment	6.3 - 7
	The gearbox kit	6.3 - 8
	Functions and features	6.3 - 10
	Lubricants	6.3 - 11
	Ventilation	6.3 - 12
Technical data	Permissible radial and axial forces at output	6.3 - 15
	Moments of inertia	6.3 - 17
	Additional weights for gearboxes	6.3 - 20

Contents

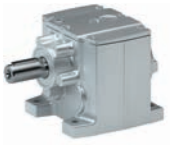

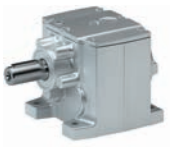

List of abbreviations

$F_{ax,max}$	[N]	Max. axial force
$F_{rad,max}$	[N]	Max. radial force
i		Ratio
J	[kgcm²]	Moment of inertia
m	[kg]	Mass

g500-H helical gearbox

General information

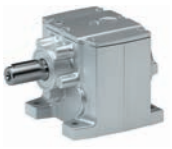

Product information

The robust helical gearboxes feature high permissible radial forces, closely stepped ratios and a low backlash. They are available in 2-pole and 3-pole design with a torque up to 450 Nm and a ratio of up to i= 370.

Versions

- Fine-scaling of size / torque provides for an optimum machine adaptation
- Standardised shaft and flange dimensions for an easy machine integration
- High efficiency

The product name

Gearbox type	Product range		Design	Rated torque [Nm]	Product
Helical gearbox	g500	-	H	45	g500-H45
				100	g500-H100
				140	g500-H140
				210	g500-H210
				320	g500-H320
				450	g500-H450

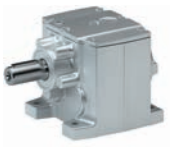

Equipment

Overview

The equipment includes all the options available as standard and all the built-on accessories of the product.

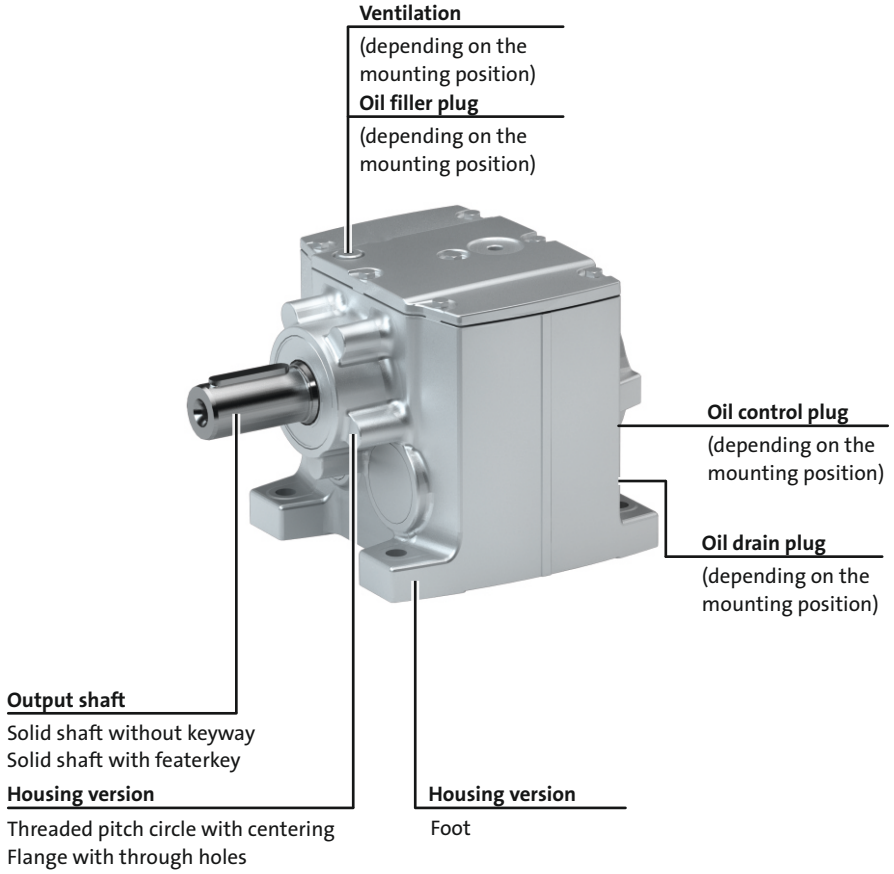

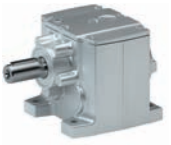

The gearbox kit

Gearbox details

Product	g500-H45	g500-H100	g500-H140	g500-H210	g500-H320	g500-H450
Driven shaft						
Solid shaft without keyway [mm]		20x40	25x50		30x60	35x70
Solid shaft with featherkey [mm]	14x28 20x40	20x40	25x50		30x60	30x60 35x70
Design	Standard stainless steel					
Gasket	Standard FPM (Viton)					
Bearing	Standard	Standard Reinforced				
Fitting grease	Not enclosed Enclosed					
Housing						
Housing version	With foot Without foot with centering	With foot With foot and centering Without foot with centering				
Output flange						
flange diameter [mm]	120/140/160			120/140/160/200	160/200	160/200/250
Lubricant						
Type	CLP 460 [1)] CLP HC 320 CLP HC 220 CLP HC 220 USDA H1					
Oil-level inspection	Without inspection With inspection					
Breather element	Without				Standard mounting position: Mounted Combined mounting position: loosely enclosed	
Backlash						
Backlash	Standard					

[1)] Not suitable for geared servo motors.

► Further information and installation feasibilities can be found in the Gearboxes chapter.

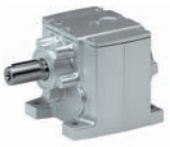

The gearbox kit

Gearbox details

Solid shaft		
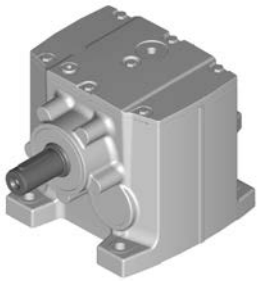 Foot mounting	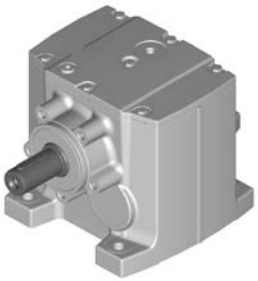 Foot mounting With centering	 Foot mounting Flange with through holes

Solid shaft	
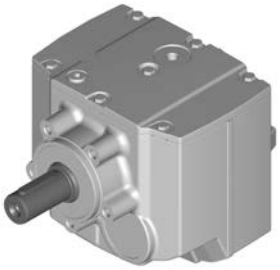 With centering	 Flange with through holes

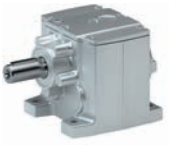

Functions and features

Product	g500-H45	g500-H100	g500-H140	g500-H210	g500-H320	g500-H450
Housing						
Design	Cuboid					
Material	Aluminium					
Solid shaft						
Design	with keyway to DIN 6885	with keyway to DIN 6885 Without keyway				
Tolerance	Shaft diameter ≤ 50 mm: k6 Shaft diameter > 50 mm: m6					
Material	Tempered steel C45 Nirosta X46Cr13					
Toothed parts						
Design	Ground tooth flanks Optimised tooth flank geometry					
Material	Case-hardened steel					
Shaft-hub joint						
	Force-fit					
Shaft sealing rings						
Design	With dust lip					
Material	NB / FP					
Bearing						
Design	Ball bearing / tapered-roller bearing depending on size and design					
Lubricants						
	Standard: mineral oil Optional: synthetic oil [1]					
Quantities	Corresponding to mounting position (see nameplate)					
Mechanical efficiency						
2-stage gearboxes [$\eta_{c=1}$]	0.96					
3-stage gearboxes [$\eta_{c=1}$]				0.95		

[1] Standard for geared servo motors.

Direction of rotation

2-stage gearboxes	3-stage gearboxes
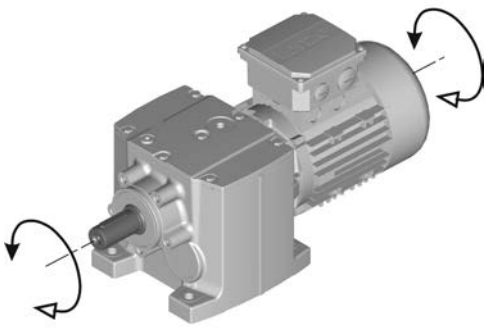	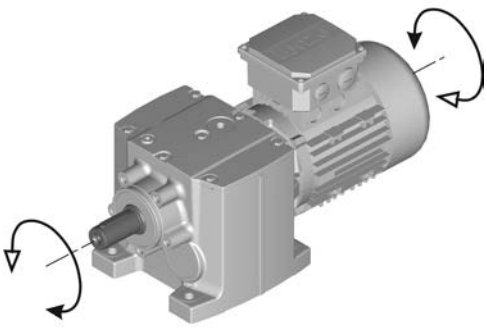



Lubricants

Lenze gearboxes and geared motors are ready for operation on delivery and are filled with lubricants specific to both the drive and the design. The mounting position and design specified in the order are key factors in choosing the volume of lubricant.

The lubricants listed in the lubricant table are approved for use in Lenze drives.

Lubricant table

Mode	CLP 460	CLP HC 320	CLP HC 220 USDA H1
Ambient temperature [°C]	0 ... +40	-25 ... +50	-20 ... +40
Specification	Mineral based oil with additives	Synthetic-based oil (synthetic hydrocarbon / poly-alpha-olefin oil)	
Changing interval	16000 operating hours not later than after three years (oil temperature 70 to 80 °C)	25000 operating hours not later than after three years (oil temperature 70 to 80 °C)	16000 operating hours not later than after three years (oil temperature 70 to 80 °C)
Fuchs	Fuchs Renolin CLP 460	Fuchs Renolin Unisyn CLP 320	bremer & leguil Cassida Fluid GL 220
Klüber	Klüberoil GEM1-460 N	Klübersynth GEM4-320 N	Klüberoil 4 UH1-220 N
Shell	Shell Omala S2 G 460	Shell Omala S4 GX HD 320	

► Please contact your Lenze sales office if you are operating at ambient temperatures in areas up to< -20 °C bzw. > or up to +40°C.

Shaft sealing rings

By default, the gearboxes come with NBR shaft sealing rings at the output end. At high speed and unfavourable ambient conditions as high temperature, reduced circulation of air etc., Lenze recommends the use of Viton shaft sealing rings.

Please consider this in your order.

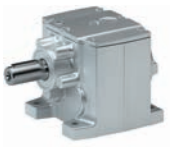

Ventilation

Non-ventilated gearboxes

No ventilation is required for gearboxes g500-H45 to H210.

Ventilated gearboxes

The g500-H320 H450 gearbox is supplied with a breather element as standard.

Gearboxes in combined mounting position

To reduce the number of different versions, the gearboxes can also be ordered with combined mounting positions.
Depending on the gearbox in question, the following combinations are available:
- g500-H45 in combined mounting position ABCDEF
- g500-H100 ... H450 in combined mounting position AEF

The breather elements are supplied loose.

Ventilation

Position of ventilation, sealing elements and oil level check

► **A ... F** mounting position

A	B
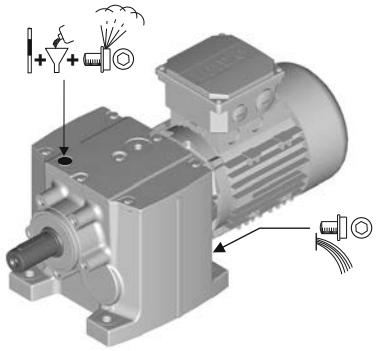	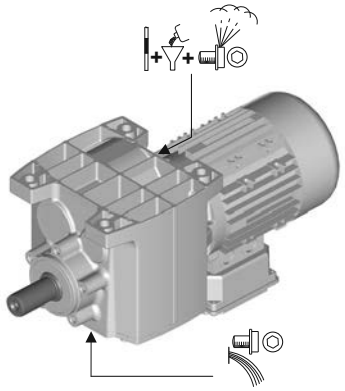
C	**D**
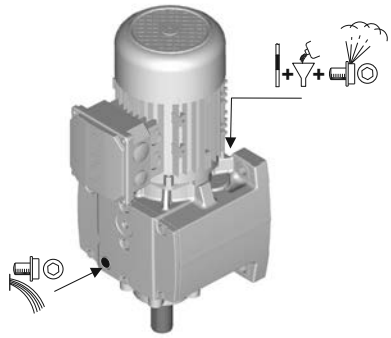	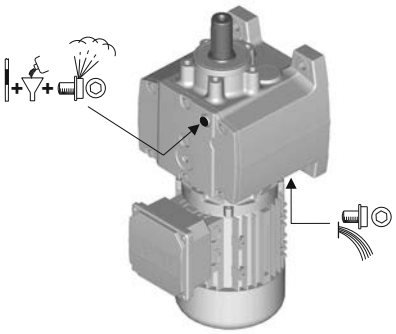
E	**F**
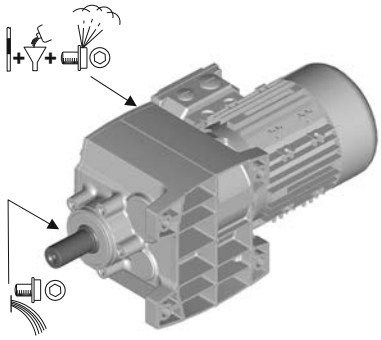	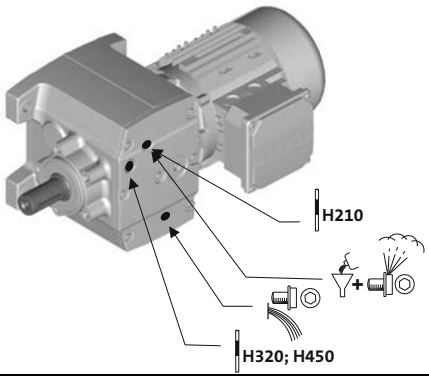

	Filling		Drain
	Ventilation		Check

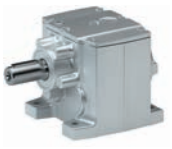

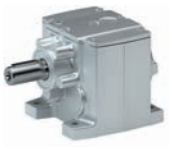

Permissible radial and axial forces at output

Permissible radial force

$F_{rad,perm} = f_w \times F_{rad,max}$

► If F_{rad} **and** $F_{ax} \neq 0$, please contact Lenze.

Permissible axial force

If there is no radial force, the maximum permissible axial force is 50 % of the table value $F_{rad,max}$

Application of forces

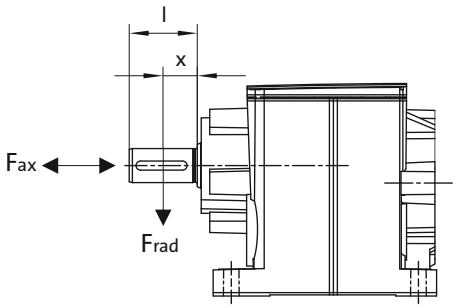

Additional load factor f_w at output shaft

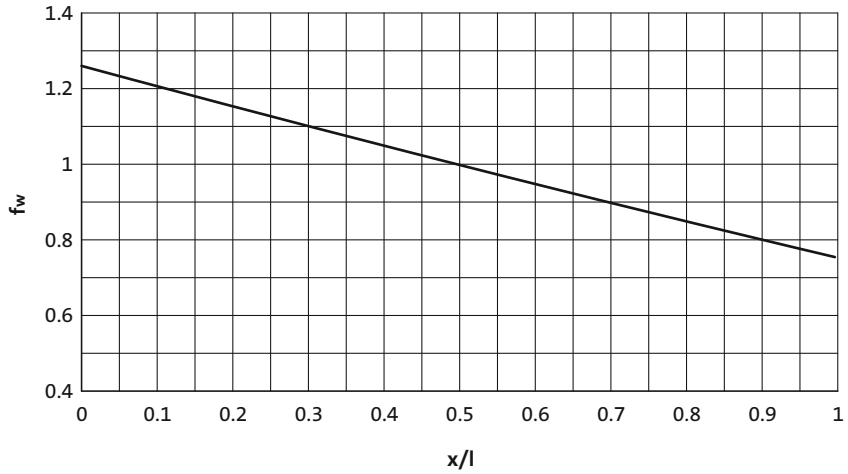

6.3

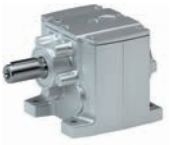

Permissible radial and axial forces at output

The values given in the table refer to the center shaft end force application point and are minimum values calculated according to the most unfavourable conditions (force application angle, mounting position, direction of rotation). The values were calculated for the motor/gearbox combination with a load capacity of c= 1.3 and an input speed of 1400 rpm.

► If the torque is transmitted via the flange face, max 50 % of the radial force $F_{rad,max}$ are permissible.

In case of different operating conditions, considerably higher forces can be transmitted. Please contact Lenze.

Product	n_2 [r/min]									
	1000	630	400	250	160	100	63	40	25	≤16

	Max. radial force, Solid shaft									
	$F_{rad,max}$	$F_{rad,max}$	$F_{rad,max}$	$F_{rad,max}$	$F_{rad,max}$	$F_{rad,max}$	$F_{rad,max}$	$F_{rad,max}$	$F_{rad,max}$	$F_{rad,max}$
	[N]	[N]	[N]	[N]	[N]	[N]	[N]	[N]	[N]	[N]
g500-H45	300	370	630	710	800	920	1100	1400	1500	1500
g500-H100	820	1000	1200	1450	1750	2120	2560	2650	2650	2650
g500-H140	1210	1750	2000	2300	2700	3300	3800	3800	3800	3800
g500-H210	1150	1600	2020	2390	2780	3360	3900	3900	4360	4800
g500-H320	1500	1900	2200	2600	3000	3500	4100	4800	5600	5700
g500-H450	1900	2200	2560	3000	3470	4050	4720	5480	6610	7100

	Max. radial force, Solid shaft (reinforced bearings))									
	$F_{rad,max}$	$F_{rad,max}$	$F_{rad,max}$	$F_{rad,max}$	$F_{rad,max}$	$F_{rad,max}$	$F_{rad,max}$	$F_{rad,max}$	$F_{rad,max}$	$F_{rad,max}$
	[N]	[N]	[N]	[N]	[N]	[N]	[N]	[N]	[N]	[N]
g500-H100	1020	1250	1500	1810	2190	2650	3200	3300	3300	3300
g500-H140	1510	2180	2500	2870	3370	4120	4750	4750	4750	4750
g500-H210	1430	2000	2520	2980	3470	4200	4870	4870	5450	6000
g500-H320	1870	2370	2750	3250	3750	4370	5120	6000	7000	7100
g500-H450	2370	2750	3200	3750	4330	5060	5900	6850	8260	8870

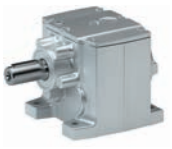

Moments of inertia

- The moments of inertia relate to the drive shaft of the gearbox.
- The total moment of inertia is calculated by adding the values of the gearbox, motor and accessories.

2-stage gearboxes

Product	Ratio	Moment of inertia
	i	J
		[kgcm²]
g500-H45	2.597	0.26
	3.413	0.17
	4.368	0.12
	5.312	0.18
	5.965	0.17
	6.982	0.12
	7.840	0.12
	8.935	0.089
	10.033	0.086
	11.429	0.059
	12.833	0.057
	14.836	0.041
	16.660	0.040
	19.013	0.028
	21.350	0.027
	24.595	0.019
	27.618	0.019
	32.000	0.012
	35.933	0.012
	41.455	0.008
	46.550	0.008
	52.909	0.005
	59.413	0.005
g500-H100	3.354	0.53
	4.600	0.34
	5.167	0.43
	5.887	0.24
	6.440	0.21
	7.086	0.28
	8.214	0.15
	9.068	0.20
	10.063	0.11
	11.360	0.17
	12.653	0.13
	14.490	0.13
	15.500	0.10
	17.750	0.10
	19.486	0.069
	22.314	0.067
	25.095	0.048
	28.738	0.047
	31.805	0.032
	36.422	0.031
	39.857	0.022
	45.643	0.022
	52.510	0.014
	60.133	0.013

Product	Ratio	Moment of inertia
	i	J
		[kgcm²]
g500-H140	3.267	0.90
	4.480	0.54
	5.733	0.36
	6.272	0.31
	7.269	0.51
	8.000	0.21
	9.029	0.34
	9.800	0.15
	11.554	0.24
	12.640	0.21
	13.957	0.20
	16.122	0.15
	17.802	0.14
	19.750	0.11
	21.808	0.11
	24.829	0.077
	27.415	0.074
	31.976	0.053
	35.308	0.051
	40.526	0.035
	44.748	0.034
	50.786	0.024
	56.077	0.024
	66.908	0.015
	73.879	0.014
g500-H210	3.389	1.53
	4.648	0.98
	5.583	1.24
	6.250	1.18
	7.657	0.82
	8.571	0.79
	9.799	0.59
	10.720	0.51
	12.000	0.50
	13.673	0.38
	15.306	0.36
	16.750	0.29
	18.750	0.28
	21.802	0.18
	24.405	0.18
	27.119	0.13
	30.357	0.13
	35.095	0.085
	39.286	0.083
	42.593	0.062
	47.679	0.061
	54.438	0.040
	60.938	0.039

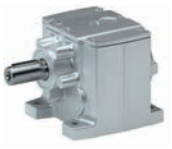

Moments of inertia

2-stage gearboxes

Product	Ratio	Moment of inertia
	i	J
		[kgcm²]
g500-H320	3.389	1.23
	4.648	0.81
	6.083	1.66
	6.910	1.51
	8.343	1.04
	9.477	0.97
	10.677	0.72
	11.680	0.63
	12.128	0.68
	13.268	0.59
	14.898	0.44
	16.923	0.42
	18.250	0.34
	20.731	0.32
	23.754	0.21
	26.983	0.20
	29.548	0.15
	33.564	0.15
	38.238	0.095
	43.436	0.092
	46.407	0.070
	52.715	0.067

Product	Ratio	Moment of inertia
	i	J
		[kgcm²]
g500-H450	3.444	4.94
	4.724	3.21
	5.678	3.64
	6.045	2.23
	6.613	1.98
	7.787	2.52
	8.800	2.40
	9.965	1.81
	11.262	1.74
	12.320	1.56
	13.905	1.21
	15.714	1.17
	17.033	0.95
	19.250	0.93
	22.170	0.53
	25.056	0.51
	27.578	0.39
	31.167	0.38
	35.689	0.24
	40.333	0.24
	43.313	0.18
	48.950	0.17
	54.750	0.12
	61.875	0.11

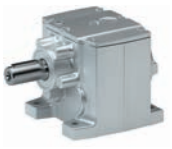

Moments of inertia

3-stage gearboxes

Product	Ratio	Moment of inertia
	i	J
		[kgcm²]
g500-H210	43.390	0.13
	48.571	0.13
	55.529	0.088
	62.160	0.088
	71.026	0.060
	79.507	0.059
	92.205	0.042
	103.214	0.042
	118.162	0.029
	132.270	0.029
	152.853	0.020
	198.873	0.014
	222.619	0.013
	257.631	0.003
	288.393	0.003
	368.080	0.006
g500-H320	47.276	0.13
	53.703	0.13
	60.502	0.093
	68.726	0.091
	77.387	0.062
	87.906	0.061
	100.462	0.044
	114.118	0.043
	128.743	0.030
	146.244	0.030
	166.541	0.021
	216.683	0.014
	246.137	0.014
	280.702	0.003
	318.859	0.003

Product	Ratio	Moment of inertia
	i	J
		[kgcm²]
g500-H450	44.124	0.36
	49.867	0.36
	56.469	0.25
	61.774	0.22
	69.813	0.22
	78.794	0.16
	89.048	0.15
	96.522	0.12
	109.083	0.12
	121.342	0.079
	137.133	0.078
	156.274	0.054
	176.611	0.054
	198.059	0.036
	223.833	0.035
	248.200	0.025
	280.500	0.025
	326.994	0.015
	369.548	0.015

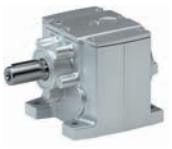

Additional weights for gearboxes

Product			g500-H45	g500-H100	g500-H140	g500-H210	g500-H320	g500-H450
Mass								
Foot	m	[kg]	0.1	0.1	0.2	0.1	0.1	0.2
Flange	m	[kg]	0.3	0.4	0.6	0.6	0.8	0.9

g500-S shaft-mounted helical geared motors

0.55 to 7.5 kW (efficiency class better than IE2)

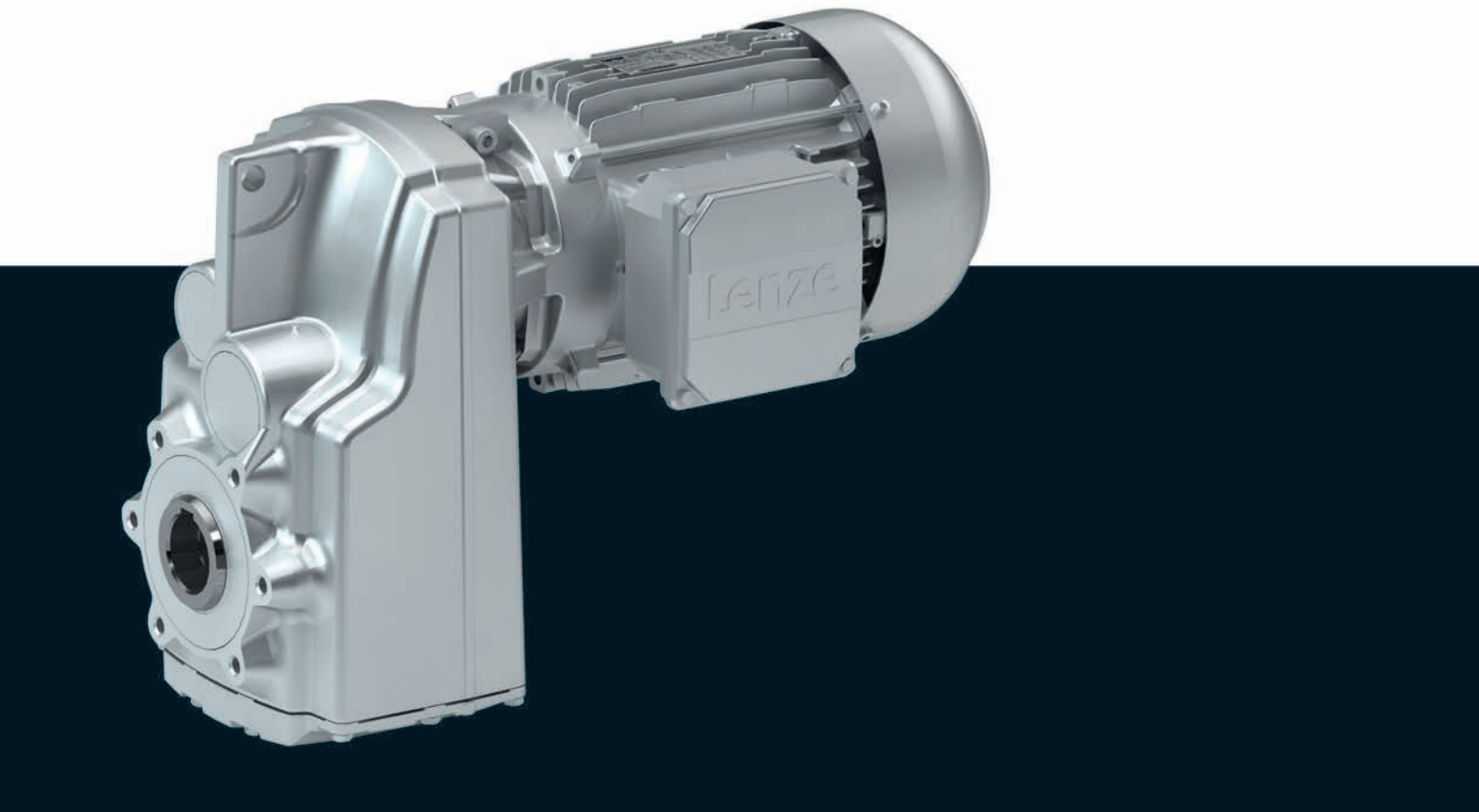

g500-S shaft-mounted helical geared motors

Contents



General information	List of abbreviations	6.5 - 5
	Product information	6.5 - 6
	Equipment	6.5 - 7
	The gearbox kit	6.5 - 8
	Dimensioning	6.5 - 14
Technical data	Selection tables, notes	6.5 - 19
	Selection tables, 4-pole motors	6.5 - 20
	Dimensions, notes	6.5 - 35
	Dimensions, 4-pole motors	6.5 - 36
	Weights, 4-pole motors	6.5 - 52
	Surface and corrosion protection	6.5 - 53

Contents





List of abbreviations

c		Load capacity
i		Ratio
m	[kg]	Mass
M_2	[Nm]	Output torque
M_{22}	[Nm]	Output torque
$M_{a_,1}$	[Nm]	Starting torque
$M_{a_,2}$	[Nm]	Starting torque
n_2	[r/min]	Output speed
n_{21}	[r/min]	Output speed
n_{22}	[r/min]	Output speed

CCC	China Compulsory Certificate
CE	Communauté Européenne
CSA	Canadian Standards Association
cURus	Combined certification marks of UL for the USA and Canada
DIN	Deutsches Institut für Normung e.V.
EMC	Electromagnetic compatibility
EN	European standard
GOST	Certificate for Russian Federation
IEC	International Electrotechnical Commission
IM	International Mounting Code
IP	International Protection Code
NEMA	National Electrical Manufacturers Association
UL	Underwriters Laboratory Listed Product
UR	Underwriters Laboratory Recognized Product
VDE	Verband deutscher Elektrotechniker (Association of German Electrical Engineers)



Product information

In combination with three-phase AC motors, our shaft-mounted helical gearboxes form a compact and powerful drive unit. Numerous options at the input and output end provide for the drive to be exactly adapted to your application.

The slim shaft-mounted helical gearboxes feature high reliable radial forces, closely stepped gear reductions and a low backlash. They are available in 2-pole and 3-pole design with a torque up to 660 Nm and a ratio of up to i= 495.

Versions

- Slimline design saves installation space of the machine
- Solid shaft, hollow shaft and shrink disc for direct integration into the machine
- High accuracy with axial output provide for the highest efficiency
- With three-phase AC motors better than IE2 in the power range 0.55 ... 7.5 kW

Inverters for motor-proximity installation

The Drive Package with decentralised Inverter Drives 8400 motec covers a power range up to 7.5 kW.

The product name

Gearbox type	Product range		Design	Rated torque [Nm]	Product
Shaft-mounted helical gearbox	g500	-	S	130	g500-S130
				220	g500-S220
				400	g500-S400
				660	g500-S660



Equipment

Overview

The equipment includes all the options available as standard and all the built-on accessories of the product.

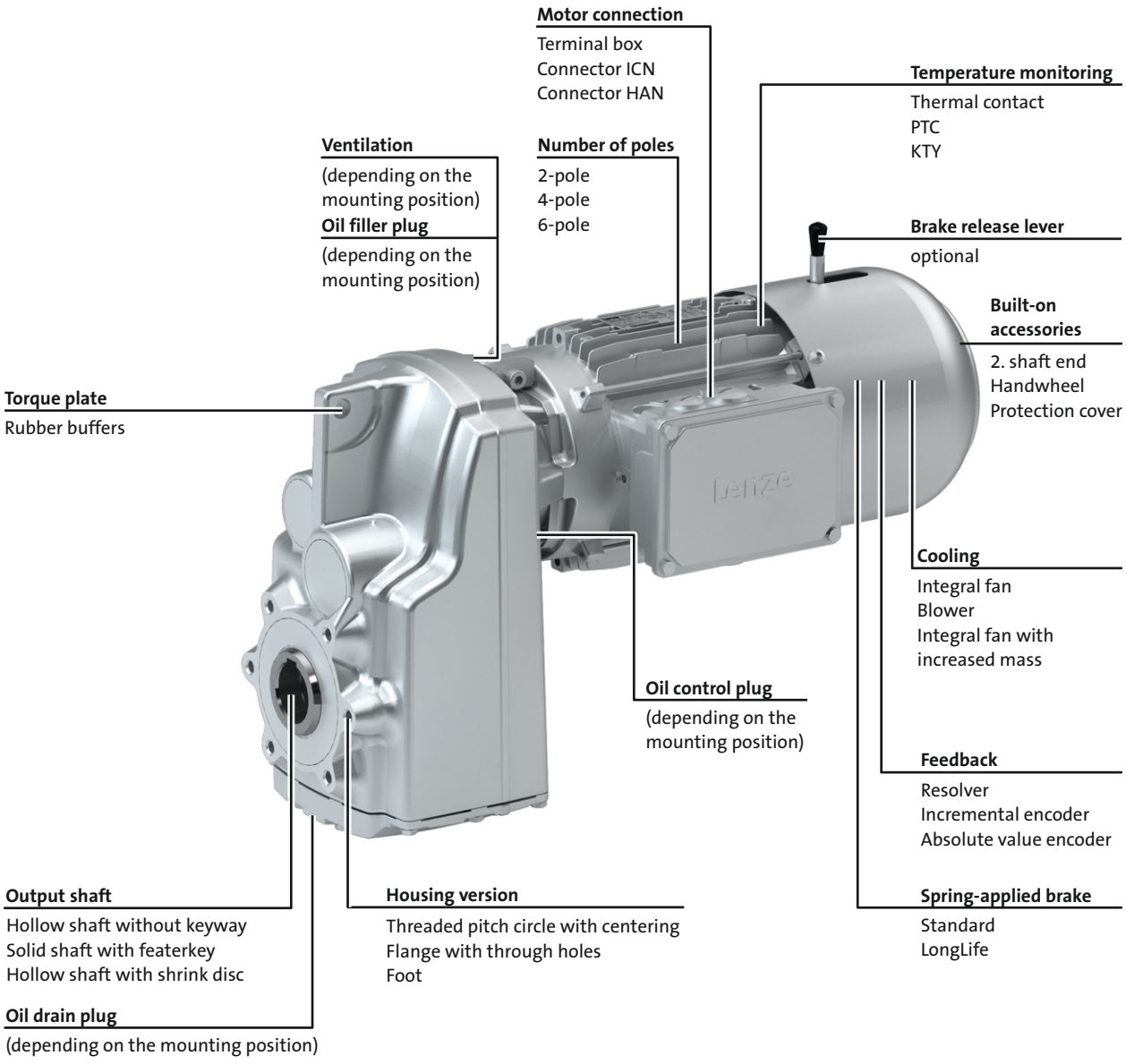



The gearbox kit

Geared motor

Product	g500-S130	g500-S220	g500-S400	g500-S660
Motor type				
Efficiency class better than IE2	MF□MA AC motors			
4-pole motor				
0.55 - 0.75 kW	063			
1.1 - 1.5 kW	071			
2.2 - 3.0 kW	080			
4.0 kW			090	
5.5 - 7.5 kW			100	
Technical data				
Rated power	See selection table			
Mains voltage				
Mains frequency				
Output torque	See selection table			
Output speed	See selection table			
Ratio	See selection table			
Load capacity	See selection table			
Mounting position				
Standard	A/B/C/D/E/F			
Combined	AEF			
Colour				
	Not coated Primed Paint in various corrosion-protection designs in accordance with RAL colours			
Surface and corrosion protection				
	Without OKS(uncoated) OKS-G (primed) OKS-S (small) OKS-M (medium) OKS-L (large)			



The gearbox kit

Mounting positions

► Mounting position (A to F) and position of system blocks (1 to 6)

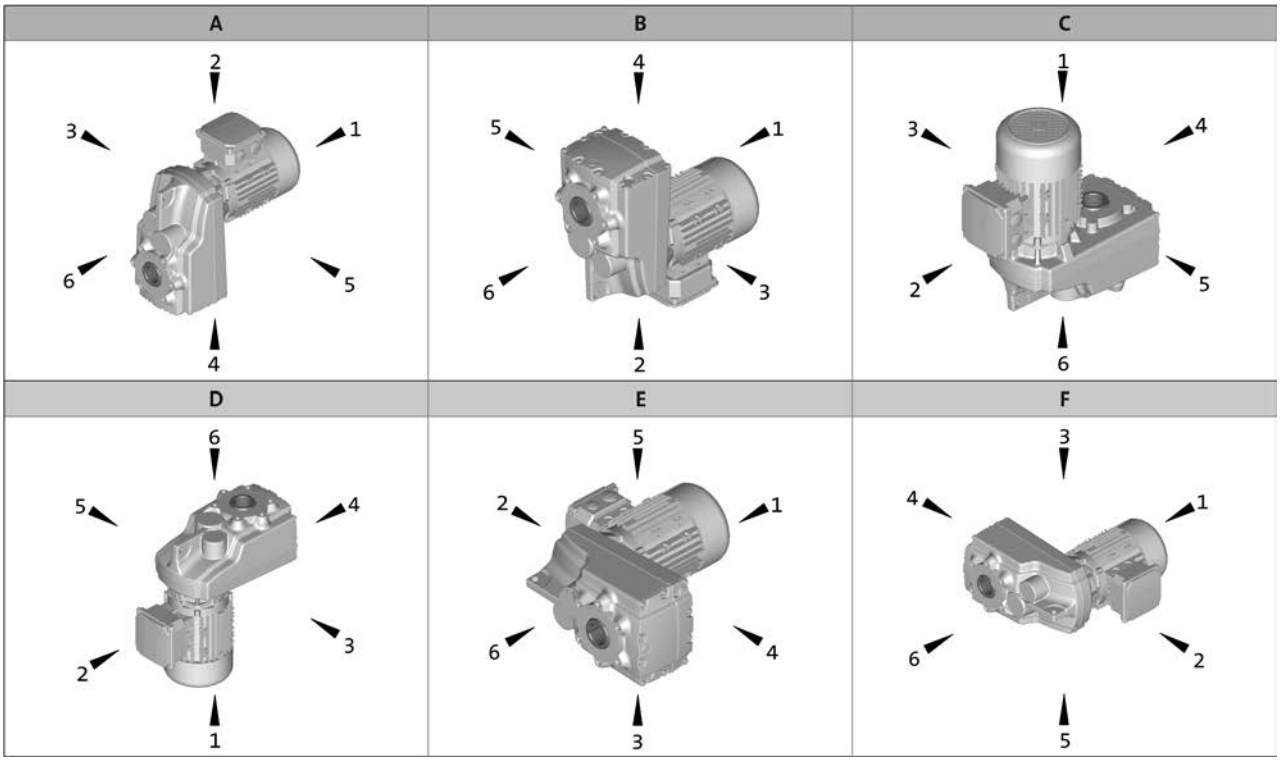

Hollow shaft: 0
Solid shaft: 6
Hollow shaft with shrink disc: 1, 6

Without foot: 0
Foot: 3, 4
Terminal box / motec: 2, 3, 4, 5



The gearbox kit

Motor details

Product	MF□MA□□					
	063-32 063-42	071-32	071-42	080-32 080-42	090-32	100-12 100-32
Connection type	Terminal box ICN connector HAN-10E connector HAN-Modular connector					
Spring-applied brake						
Rated torque [Nm]	4		4 8	8 16		16 32
Brake voltage [V]	DC 24/180/205 AC 230/400/460					
Brake design	Standard LongLife					
	Standard Overexcited Cold Brake					
Options	Manual release lever Low noise With cover ring					
Feedback	With absolute value encoder With incremental encoder With resolver					
Cooling	Without blower/integral fan Blower Integral fan with increased mass					
Temperature monitoring	TKO thermal contact KTY83-110 thermal detector KTY84-130 thermal detector PTC thermistor					
Approval	cURus CCC					
Degree of protection	IP55					
Further options	Protection cover 2nd shaft end Handwheel					

► Further information and installation feasibilities can be found in the Motors chapter.



The gearbox kit

Motor details

Connection type



Terminal box



ICN connector



HAN connector

Cooling: integral fan



Without built-on accessories

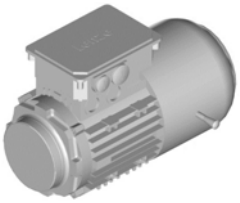

With spring-applied brake
With or without manual release lever

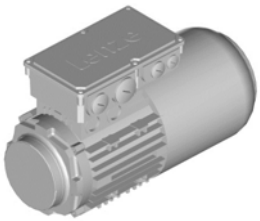

With feedback
With feedback and spring-applied brake

Cooling: blower

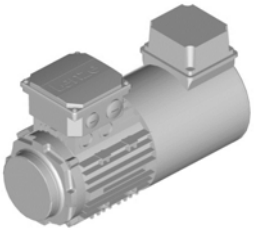

Without built-on accessories

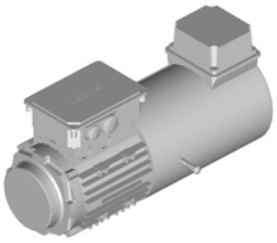

With spring-applied brake
With or without manual release lever

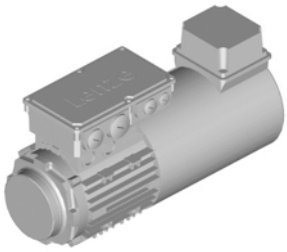

With feedback
With feedback and spring-applied brake

Further options



With 2nd shaft end
Only integral fan

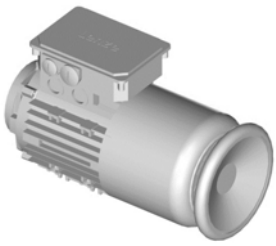

With handwheel
Only integral fan

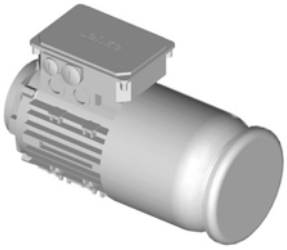

With protection cover

6.5



The gearbox kit

Gearbox details

Product	g500-S130	g500-S220	g500-S400	g500-S660
Driven shaft				
Solid shaft with featherkey [mm]	25x50		30x60	35x70 40x80
Hollow shaft with keyway [mm]	25	25/30	30/35	40/45
Hollow shaft with shrink disc [mm]	25	25/30	35	40
Design	Standard stainless steel			
Gasket	Standard FPM (Viton)			
Bearing	Standard			
Fitting grease	Not enclosed Enclosed			
Housing				
Housing version	With foot without centring With centering			
Output flange				
flange diameter [mm]	160		200	200/250 [1]
Lubricant				
Type	CLP 460 [2] CLP HC 320 CLP HC 220 CLP HC 220 USDA H1			
Oil-level inspection	Without inspection With inspection			
Breather element	Without		Standard mounting position: Mounted Combined mounting position: loosely enclosed	
Backlash				
Backlash	Standard			
Accessories				
Torque plate	Rubber buffers			
Shaft cover	Shrink disc: Rotating cover Shrink disc: Fixed cover			

[1] 200 mm flange diameter only possible on hollow shaft version.
[2] Not suitable for geared servo motors.

6.5

► Further information and installation feasibilities can be found in the Gearboxes chapter.



The gearbox kit

Gearbox details

Solid shaft

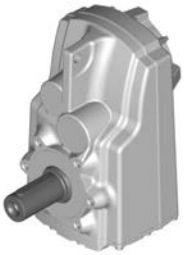
without centring

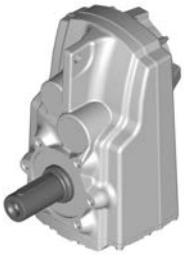
With centering


Flange with through holes

Hollow shaft


without centring


With centering


Flange with through holes

Hollow shaft with shrink disc


without centring


With centering


Flange with through holes

Accessories


Foot mounting


With rubber buffer

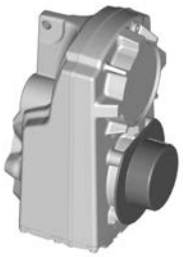
Shrink disc cover

6.5



Dimensioning

General information about the data provided in this catalogue

The powers, torques and speeds specified in this catalogue are rounded values and are valid under the following conditions:

- Operating time/day = 8 h (100% OT)
- Duty class I for up to 10 switching operations/h
- Mounting positions and designs in this catalogue
- Standard lubricant
- T_{amb} = 20 °C for gearboxes,
  T_{amb} = 40 °C for motors (in accordance with EN 60034)
- Site altitude < = 1000 m amsl
- The selection tables provide the permissible mechanical powers and torques. For notes on the thermal power limit, see chapter drive dimensioning.
- The rated power specified for motors and geared motors applies to operating mode S1 (in accordance with EN 60034).

Under different operating conditions, the values obtained may vary from those listed here.
In the case of extreme operating conditions, please consult your Lenze sales office.



Dimensioning

Thermal power limit

The thermal power limit, defined by the heat balance, limits the permissible gearbox continuous power. It may be less than the mechanical power ratings listed in the selection tables.

The thermal power limit is affected by:
- the churning losses in the lubricant. These are determined by the mounting position and the circumferential speed of the gears;
- the load and the speed
- the ambient conditions: temperature, air circulation, input or dissipation via shafts and the foundation

If the following input speeds n_1 are exceeded, please contact Lenze:

Motor frame size	Mounting position A, B, E, F	Mounting position C, D
063 ... 100	4000 r/min	3000 r/min
112 ... 132	3000 r/min	1500 r/min

► For a short period of time up to 5 min, 30 % higher speeds are permissible

Possible ways of extending the application area

- synthetic lubricant (option)
- shaft sealing rings made from FP material/Viton (option)
- reduction in lubricant quantity
- cooling of the geared motor by means of air convection on the machine/system



Dimensioning

Load capacity and application factor

Load capacity c of gearbox
Rated value for the load capacity of Lenze geared motors.
- c is the ratio of the permissible rated torque of the gearbox to the rated torque supplied by the drive component (e.g. the built-in Lenze motor).
- The value of c must always be greater than the value of the application factor k calculated for the application.

Application factor k (according to DIN 3990)
Takes into account the influence of temporally variable loads which are actually present during the anticipated operating time of gearboxes and geared motors.
k is determined by:
- the type of load
- the load intensity
- temporal influences

Duty class	Load type
I	Smooth operation, small or light jolts
II	Uneven operation, average jolts
III	Uneven operation, severe jolts and/or alternating load

Application factor k

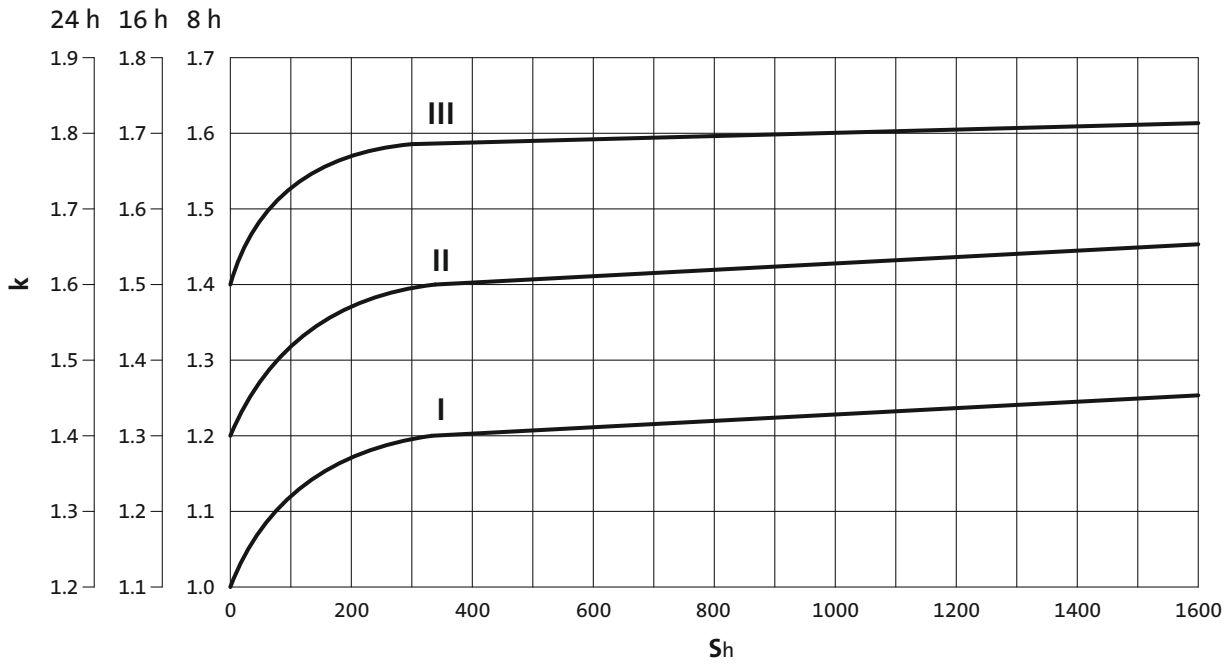

► S_h= switchings/h



Dimensioning

Torque derating at low motor frequencies

Motor size-dependent torque reduction, taking into account the thermal response during operation on the inverter.

Torque characteristics

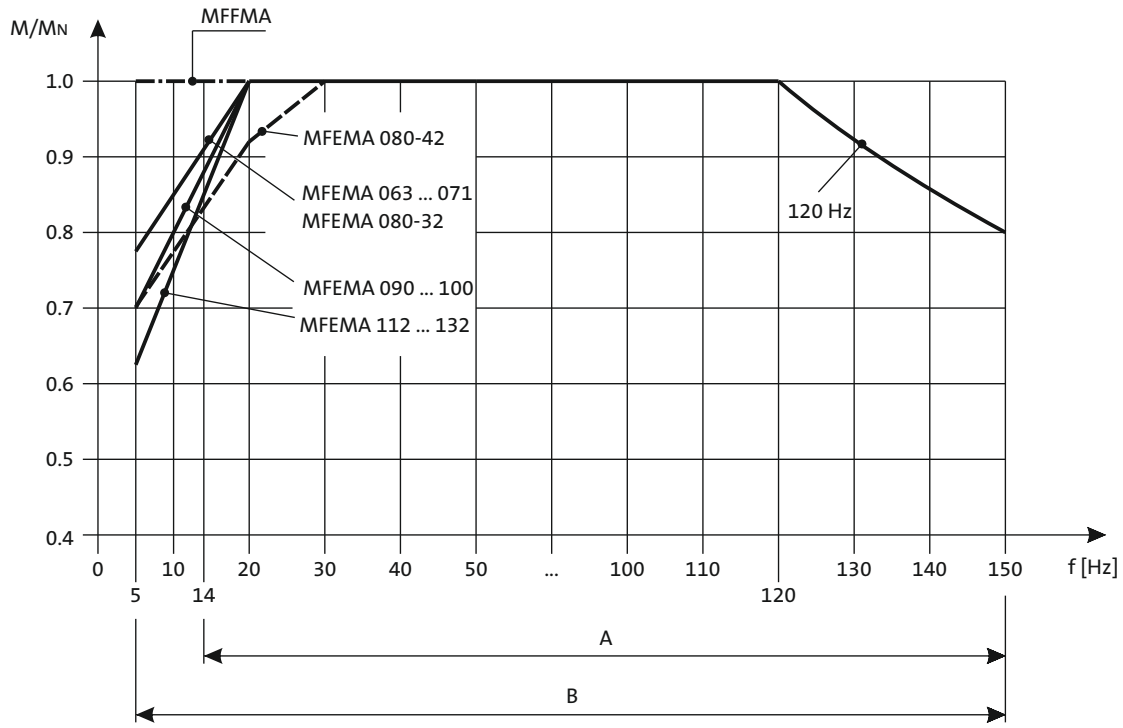

A = Operation with integral fan and brake
B = Operation with integral fan and brake control "Holding current reduction"

You can use the Drive Solution Designer for precise drive dimensioning.

The Drive Solution Designer helps you to carry out a fast and high-quality drive dimensioning.
The software includes well-founded and proven knowledge on drive applications and electro-mechanical drive components.

Please contact your Lenze sales office.



Dimensioning

Weights

The values given in the tables consider the following gearbox/motor combination:
- Gearbox with hollow shaft without foot and flange including lubricant amount for mounting position A
- Motor without built-on accessories (with integral fan)

For versions deviating from this, additional weights have to be considered.

The respective values can be found for:
- Geared motors without built-on accessories
  > Chapter: Geared motors/Technical data
- Gearbox options
  > Chapter: Gearboxes/Technical data and accessories
- Motor options: Spring-applied brake, feedback, 2. Shaft end, handwheel and increased centrifugal mass
  > Chapter: Motors/Accessories

Moments of inertia

The given moments of inertia of the gearbox refer to the drive shaft. The influence of the ratio (i^2) has been considered in the data.

When the total moment of inertia of the geared motor is calculated, the values of the gearbox, motor and accessories have to be added.

The respective values can be found for:
- Gearboxes
  > Chapter: Gearbox/Technical data
- Motors without built-on accessories
  > Chapter: Motors/Technical data/Rated data
- Motor options: Spring-applied brake, feedback, 2. Shaft end, handwheel and increased centrifugal mass
  > Chapter: Motors/Accessories



Selection tables, notes

Notes on the selection tables with 4-pole motors

The selection tables show the available combinations of gearbox type, number of stages, ratio and motor. They are used only to provide basic orientation.
The following legend indicates the structure of the selection tables.

Rated power Prated of the drive motor depending on the rated frequency

120 Hz: P_N = 0.55 kW

2-stufige Getriebe ← **Number of the gear stage of the gearbox**

Torque diagram

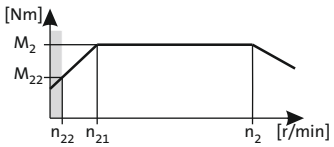

Inverter operation							i	Product		
5 Hz -		- 20 Hz		- 120 Hz (1:24)						
n_{22} [r/min]	M_{22} [Nm]	n_{21} [r/min]	M_2 [Nm]	n_2 [r/min]	M_2 [Nm]	c		g500	MF□MA□□	
23	7.2	93	10	535	10	4.5	6.425	-S130	063-32	36
21	7.9	85	10	489	10	4.5	7.029	-S130	063-32	36

Product Gearbox | **Product Motor** | **Ratio i** | **Page number for dimensions**

Inverter operation
The speed and torque data are valid for self-ventilated and forced ventilated drives. Forced ventilated drives can always output the torque **M2** in the entire setting ranges. In the case of self-ventilated drives, a reduction to **M22** is required in the lower speed range.

The following applies to self-ventilated geared motors:
n22 is the minimum speed where the torque **M22** is permissible, from **n21** to **n2**, the maximum torque is **M2**
The following applies to forced ventilated geared motors:
From the minimum speed **n22** to **n2**, the maximum torque is **M2**

Load capacity c of the gearbox
c is the ratio between the permissible rated torque of the gearbox and the rated torque of the three-phase AC motor (converted to the driven shaft).
c must be always higher than the service factor **k** determined for the application **k**.

$$c = \frac{M_{2,zul}}{M_{1N} \cdot i \cdot \eta_{Getr}} > k$$

Motor voltages

The power values and torques indicated in the selection tables relate to the following motor voltages:
- 50 Hz : Δ 230 V / Y 400 V
- 60 Hz : 230 V or 460 V
- 87 Hz : Δ 400 V

Operation at 87 Hz

In 87 Hz operation, the three-phase AC motor (which is designed for a voltage of Δ 230 V / Y 400 V at 50 Hz) is operated on an inverter with 400 V rated voltage in a delta connection. It is important to note here that the inverter must be configured for 87Hz output.
This offers the following advantages over 50 Hz operation:
- the setting range of the motor is increased by a factor of 1.73.
- the motor can then provide around 1.73 times greater output, which in turn allows a smaller and more affordable motor to be selected for the application.
- the efficiency of the motor is also improved.



Selection tables, 4-pole motors

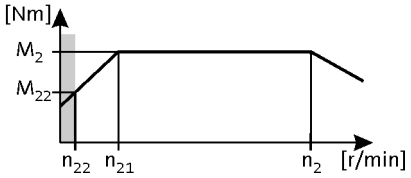

120 Hz: P_N = 0.55 kW

2-stage gearboxes

Inverter operation							i	Product		
5 Hz -		- 20 Hz		- 120 Hz (1:24)						
n_{22} [r/min]	M_{22} [Nm]	n_{21} [r/min]	M_2 [Nm]	n_2 [r/min]	M_2 [Nm]	c		g500	MF□MA□□	
23	7.2	93	10	535	10	4.5	6.425	-S130	063-32	36
21	7.9	85	10	489	10	4.5	7.029	-S130	063-32	36
9.9	16	41	22	236	22	4.5	14.606	-S130	063-32	36
9.1	18	38	24	215	24	4.2	15.979	-S130	063-32	36
8.0	20	33	27	190	27	4.2	18.069	-S130	063-32	36
7.1	23	29	30	169	30	3.7	20.381	-S130	063-32	36
6.3	26	26	34	149	34	3.3	23.048	-S130	063-32	36
5.8	28	24	37	138	37	3.0	24.967	-S130	063-32	36
5.1	32	21	42	122	42	2.7	28.233	-S130	063-32	36
4.6	35	19	46	110	46	2.7	31.387	-S130	063-32	36
4.1	40	17	53	97	53	2.4	35.493	-S130	063-32	36
3.6	45	15	60	85	60	2.1	40.422	-S130	063-32	36
3.2	51	13	68	75	68	1.8	45.711	-S130	063-32	36
3.0	54	13	71	71	71	2.9	48.190	-S220	063-32	40
2.8	57	12	76	67	76	1.6	51.230	-S130	063-32	36
2.8	58	12	76	67	76	2.8	51.620	-S220	063-32	40
2.5	64	11	84	60	84	3.0	56.960	-S400	063-32	44
2.5	65	10	86	59	86	1.5	57.933	-S130	063-32	36
2.5	66	10	87	59	87	2.4	58.486	-S220	063-32	40
2.3	72	9.3	95	54	95	1.3	64.200	-S130	063-32	36
2.3	72	9.3	95	54	95	3.0	64.354	-S400	063-32	44
2.2	74	9.1	98	52	98	1.5	65.975	-S220	063-32	40
2.0	81	8.3	108	47	108	1.2	72.600	-S130	063-32	36
1.9	84	8.0	111	46	111	1.5	74.750	-S220	063-32	40

3-stage gearboxes

Inverter operation							i	Product		
5 Hz -		- 20 Hz		- 120 Hz (1:24)						
n_{22} [r/min]	M_{22} [Nm]	n_{21} [r/min]	M_2 [Nm]	n_2 [r/min]	M_2 [Nm]	c		g500	MF□MA□□	
2.2	74	8.9	98	51	98	1.9	67.298	-S220	063-32	40
1.9	84	7.9	111	45	111	1.9	76.249	-S220	063-32	40
1.7	93	7.2	122	41	122	3.1	83.900	-S400	063-32	44
1.7	95	7.0	126	40	126	1.7	86.079	-S220	063-32	40
1.5	105	6.3	139	36	139	2.8	94.984	-S400	063-32	44
1.5	108	6.2	142	35	142	1.5	97.528	-S220	063-32	40
1.4	119	5.6	157	32	157	2.4	107.314	-S400	063-32	44
1.3	123	5.4	163	31	163	1.3	111.747	-S220	063-32	40
1.2	136	4.9	180	28	180	2.1	123.307	-S400	063-32	44
1.1	140	4.7	185	27	185	1.1	126.610	-S220	063-32	40
1.1	151	4.4	200	25	200	3.2	137.133	-S660	063-32	48



Selection tables, 4-pole motors

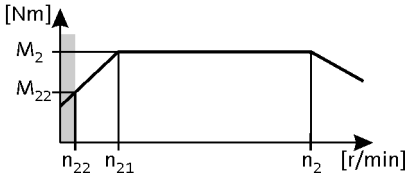

120 Hz: P_N = 0.55 kW

3-stage gearboxes

Inverter operation							i	Product		
5 Hz -		- 20 Hz		- 120 Hz (1:24)						
n_{22} [r/min]	M_{22} [Nm]	n_{21} [r/min]	M_2 [Nm]	n_2 [r/min]	M_2 [Nm]	c		g500	MF□MA□□	
1.0	154	4.3	203	25	203	1.9	139.313	-S400	063-32	44
1.0	158	4.2	209	24	209	1.0	143.205	-S220	063-32	40
0.9	173	3.8	228	22	228	2.8	156.249	-S660	063-32	48
0.9	175	3.8	231	22	231	1.7	158.019	-S400	063-32	44
0.8	195	3.4	258	20	258	2.5	176.611	-S660	063-32	48
0.8	197	3.4	260	19	260	1.5	178.531	-S400	063-32	44
0.7	222	3.0	294	17	294	2.2	201.230	-S660	063-32	48
0.7	226	2.9	298	17	298	1.3	204.412	-S400	063-32	44
0.6	247	2.7	327	15	327	1.9	223.833	-S660	063-32	48
0.6	255	2.6	337	15	337	1.1	230.946	-S400	063-32	44
0.6	282	2.4	372	14	372	1.7	255.034	-S660	063-32	48
0.5	310	2.1	409	12	409	1.3	280.500	-S660	063-32	48
0.5	353	1.9	466	11	466	1.3	319.600	-S660	063-32	48



Selection tables, 4-pole motors

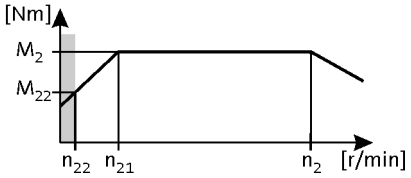

120 Hz: P_N = 0.75 kW

2-stage gearboxes

Inverter operation							i	Product		
5 Hz -		- 20 Hz		- 120 Hz (1:24)						
n_{22} [r/min]	M_{22} [Nm]	n_{21} [r/min]	M_2 [Nm]	n_2 [r/min]	M_2 [Nm]	c		g500	MF□MA□□	
23	9.8	93	13	529	13	3.3	6.425	-S130	063-42	36
21	11	85	14	484	14	3.3	7.029	-S130	063-42	36
9.9	22	41	30	233	30	3.3	14.606	-S130	063-42	36
9.1	24	38	33	213	33	3.0	15.979	-S130	063-42	36
8.0	28	33	37	188	37	3.0	18.069	-S130	063-42	36
7.1	31	29	42	167	42	2.7	20.381	-S130	063-42	36
6.3	35	26	47	148	47	2.4	23.048	-S130	063-42	36
5.8	38	24	51	136	51	2.2	24.967	-S130	063-42	36
5.5	40	23	54	129	54	3.1	26.422	-S220	063-42	40
5.1	43	21	58	120	58	2.0	28.233	-S130	063-42	36
5.0	45	21	60	117	60	3.1	29.156	-S400	063-42	44
4.8	46	20	61	114	61	3.1	29.937	-S220	063-42	40
4.6	48	19	64	108	64	1.9	31.387	-S130	063-42	36
4.4	50	18	67	103	67	2.9	32.867	-S220	063-42	40
4.1	54	17	73	96	73	1.7	35.493	-S130	063-42	36
4.0	55	17	74	94	74	2.9	36.267	-S400	063-42	44
3.9	57	16	76	91	76	2.8	37.238	-S220	063-42	40
3.6	62	15	82	84	82	2.9	40.333	-S660	063-42	48
3.6	62	15	83	84	83	1.5	40.422	-S130	063-42	36
3.5	63	15	84	83	84	2.9	40.974	-S400	063-42	44
3.4	65	14	87	80	87	2.4	42.533	-S220	063-42	40
3.2	70	13	93	74	93	1.3	45.711	-S130	063-42	36
3.2	70	13	94	74	94	2.9	45.956	-S660	063-42	48
3.1	72	13	96	72	96	2.6	46.933	-S400	063-42	44
3.0	74	13	98	71	98	2.1	48.190	-S220	063-42	40
3.0	75	12	100	70	100	2.5	48.950	-S660	063-42	48
2.8	78	12	105	66	105	1.2	51.230	-S130	063-42	36
2.8	79	12	105	66	105	2.0	51.620	-S220	063-42	40
2.7	81	11	108	64	108	2.6	53.026	-S400	063-42	44
2.6	85	11	114	61	114	2.5	55.773	-S660	063-42	48
2.5	87	11	116	60	116	2.2	56.960	-S400	063-42	44
2.5	89	10	118	59	118	1.1	57.933	-S130	063-42	36
2.5	89	10	120	58	120	1.8	58.486	-S220	063-42	40
2.3	98	9.3	132	53	132	2.2	64.354	-S400	063-42	44
2.2	101	9.1	135	52	135	1.1	65.975	-S220	063-42	40



Selection tables, 4-pole motors

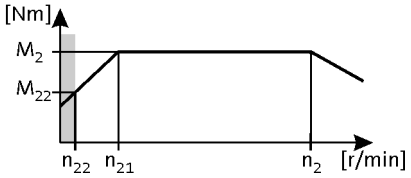

120 Hz: P_N = 0.75 kW

2-stage gearboxes

Inverter operation							i	Product		
5 Hz -		- 20 Hz		- 120 Hz (1:24)						
n_{22} [r/min]	M_{22} [Nm]	n_{21} [r/min]	M_2 [Nm]	n_2 [r/min]	M_2 [Nm]	c		g500	MF□MA□□	
1.9	114	8.0	153	46	153	1.1	74.750	-S220	063-42	40

3-stage gearboxes

Inverter operation							i	Product		
5 Hz -		- 20 Hz		- 120 Hz (1:24)						
n_{22} [r/min]	M_{22} [Nm]	n_{21} [r/min]	M_2 [Nm]	n_2 [r/min]	M_2 [Nm]	c		g500	MF□MA□□	
2.2	101	8.9	135	51	135	1.4	67.298	-S220	063-42	40
2.0	112	8.1	149	46	149	2.6	74.260	-S400	063-42	44
1.9	115	7.9	153	45	153	1.4	76.249	-S220	063-42	40
1.7	126	7.2	169	41	169	2.3	83.900	-S400	063-42	44
1.7	130	7.0	173	40	173	1.2	86.079	-S220	063-42	40
1.5	143	6.3	191	36	191	2.0	94.984	-S400	063-42	44
1.5	147	6.2	196	35	196	1.1	97.528	-S220	063-42	40
1.4	153	5.9	204	34	204	3.1	101.460	-S660	063-42	48
1.4	162	5.6	216	32	216	1.8	107.314	-S400	063-42	44
1.3	164	5.5	220	31	220	2.9	109.083	-S660	063-42	48
1.2	186	4.9	248	28	248	1.6	123.307	-S400	063-42	44
1.2	187	4.8	250	27	250	2.5	124.289	-S660	063-42	48
1.1	207	4.4	276	25	276	2.3	137.133	-S660	063-42	48
1.0	210	4.3	280	24	280	1.4	139.313	-S400	063-42	44
0.9	235	3.8	315	22	315	2.0	156.249	-S660	063-42	48
0.9	238	3.8	318	22	318	1.2	158.019	-S400	063-42	44
0.8	266	3.4	356	19	356	1.8	176.611	-S660	063-42	48
0.8	269	3.4	359	19	359	1.1	178.531	-S400	063-42	44
0.7	303	3.0	405	17	405	1.6	201.230	-S660	063-42	48
0.6	337	2.7	451	15	451	1.4	223.833	-S660	063-42	48
0.6	384	2.4	513	13	513	1.2	255.034	-S660	063-42	48



Selection tables, 4-pole motors

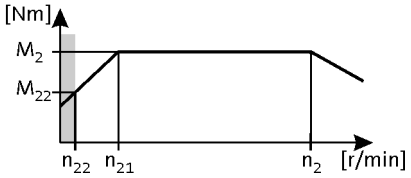

120 Hz: P_N = 1.1 kW

2-stage gearboxes

Inverter operation							i	Product		
5 Hz -		- 20 Hz		- 120 Hz (1:24)						
n_{22} [r/min]	M_{22} [Nm]	n_{21} [r/min]	M_2 [Nm]	n_2 [r/min]	M_2 [Nm]	c		g500	MF□MA□□	
25	13	102	17	596	17	4.2	5.860	-S400	071-32	44
23	14	93	19	543	19	3.5	6.425	-S130	071-32	36
21	16	85	21	497	21	3.4	7.029	-S130	071-32	36
9.9	33	41	43	239	43	2.3	14.606	-S130	071-32	36
9.8	33	41	43	236	43	4.2	14.806	-S400	071-32	44
9.1	36	38	47	218	47	2.1	15.979	-S130	071-32	36
8.0	41	33	53	193	53	2.1	18.069	-S130	071-32	36
7.1	46	30	59	172	59	3.2	20.300	-S220	071-32	40
7.1	46	29	60	171	60	1.9	20.381	-S130	071-32	36
6.3	52	26	67	152	67	2.8	23.000	-S220	071-32	40
6.3	52	26	67	151	67	1.7	23.048	-S130	071-32	36
5.8	56	24	73	140	73	1.5	24.967	-S130	071-32	36
5.5	59	23	77	132	77	2.4	26.422	-S220	071-32	40
5.1	63	21	82	124	82	1.4	28.233	-S130	071-32	36
4.8	67	20	87	117	87	2.2	29.937	-S220	071-32	40
4.6	70	19	92	111	92	1.4	31.387	-S130	071-32	36
4.4	74	18	96	106	96	2.2	32.867	-S220	071-32	40
4.1	80	17	104	98	104	1.2	35.493	-S130	071-32	36
3.9	84	16	109	94	109	1.9	37.238	-S220	071-32	40
3.6	91	15	118	86	118	1.1	40.422	-S130	071-32	36
3.5	92	15	120	85	120	3.2	40.974	-S400	071-32	44
3.4	95	14	124	82	124	1.7	42.533	-S220	071-32	40
3.1	105	13	137	74	137	2.2	46.933	-S400	071-32	44
3.0	108	13	141	72	141	1.5	48.190	-S220	071-32	40
3.0	110	12	143	71	143	2.8	48.950	-S660	071-32	48
2.8	116	12	151	68	151	1.4	51.620	-S220	071-32	40
2.7	119	11	155	66	155	2.1	53.026	-S400	071-32	44
2.6	125	11	163	63	163	2.8	55.773	-S660	071-32	48
2.5	128	11	166	61	166	1.5	56.960	-S400	071-32	44
2.5	131	10	171	60	171	1.2	58.486	-S220	071-32	40
2.3	144	9.3	188	54	188	1.5	64.354	-S400	071-32	44

3-stage gearboxes

Inverter operation							i	Product		
5 Hz -		- 20 Hz		- 120 Hz (1:24)						
n_{22} [r/min]	M_{22} [Nm]	n_{21} [r/min]	M_2 [Nm]	n_2 [r/min]	M_2 [Nm]	c		g500	MF□MA□□	
2.3	141	9.4	184	55	184	3.1	63.817	-S660	071-32	48
2.1	154	8.6	201	50	201	2.8	69.813	-S660	071-32	48
2.0	161	8.3	209	48	209	3.0	72.713	-S660	071-32	48
2.0	164	8.1	214	47	214	1.8	74.260	-S400	071-32	44



Selection tables, 4-pole motors

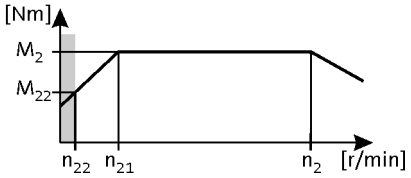

120 Hz: P_N = 1.1 kW

3-stage gearboxes

Inverter operation							i	Product		
5 Hz -		- 20 Hz		- 120 Hz (1:24)						
n_{22} [r/min]	M_{22} [Nm]	n_{21} [r/min]	M_2 [Nm]	n_2 [r/min]	M_2 [Nm]	c		g500	MF□MA□□	
1.8	176	7.5	229	44	229	2.7	79.545	-S660	071-32	48
1.7	185	7.2	241	42	241	1.6	83.900	-S400	071-32	44
1.6	197	6.7	256	39	256	2.5	89.048	-S660	071-32	48
1.5	210	6.3	273	37	273	1.4	94.984	-S400	071-32	44
1.4	224	5.9	292	34	292	2.2	101.460	-S660	071-32	48
1.4	237	5.6	309	33	309	1.2	107.314	-S400	071-32	44
1.3	241	5.5	314	32	314	2.0	109.083	-S660	071-32	48
1.2	272	4.9	355	28	355	1.1	123.307	-S400	071-32	44
1.2	275	4.8	358	28	358	1.8	124.289	-S660	071-32	48
1.1	303	4.4	394	25	394	1.6	137.133	-S660	071-32	48
0.9	345	3.8	449	22	449	1.4	156.249	-S660	071-32	48
0.8	390	3.4	508	20	508	1.2	176.611	-S660	071-32	48
0.7	444	3.0	579	17	579	1.1	201.230	-S660	071-32	48



Selection tables, 4-pole motors

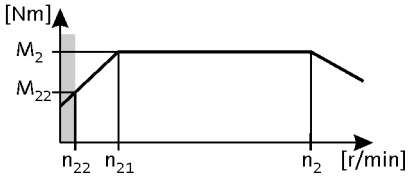

120 Hz: P_N = 1.5 kW

2-stage gearboxes

Inverter operation							i	Product		
5 Hz -		- 20 Hz		- 120 Hz (1:24)						
n_{22} [r/min]	M_{22} [Nm]	n_{21} [r/min]	M_2 [Nm]	n_2 [r/min]	M_2 [Nm]	c		g500	MF□MA□□	
25	18	102	24	589	24	3.1	5.860	-S400	071-42	44
23	20	94	26	538	26	3.1	6.411	-S400	071-42	44
23	20	93	26	537	26	2.6	6.425	-S130	071-42	36
21	22	85	28	491	28	2.5	7.029	-S130	071-42	36
12	36	51	48	291	48	3.1	11.876	-S220	071-42	40
11	40	46	52	266	52	3.1	12.992	-S220	071-42	40
11	40	46	53	263	53	3.1	13.105	-S400	071-42	44
11	41	45	54	256	54	3.1	13.456	-S220	071-42	40
10	44	42	58	241	58	3.1	14.336	-S400	071-42	44
9.9	45	41	59	236	59	1.7	14.606	-S130	071-42	36
9.9	45	41	59	234	59	2.8	14.720	-S220	071-42	40
9.8	45	41	60	233	60	3.1	14.806	-S400	071-42	44
9.2	48	38	63	220	63	3.1	15.714	-S660	071-42	48
9.1	49	38	64	216	64	1.5	15.979	-S130	071-42	36
9.0	50	37	65	213	65	3.1	16.197	-S400	071-42	44
8.8	51	36	67	208	67	2.5	16.571	-S220	071-42	40
8.1	55	34	72	193	72	3.1	17.905	-S660	071-42	48
8.0	55	33	73	191	73	1.5	18.069	-S130	071-42	36
7.9	56	33	74	189	74	3.3	18.286	-S400	071-42	44
7.7	57	32	76	184	76	2.5	18.776	-S220	071-42	40
7.1	62	30	82	170	82	2.3	20.300	-S220	071-42	40
7.1	62	29	82	169	82	1.4	20.381	-S130	071-42	36
7.0	63	29	83	167	83	3.3	20.659	-S400	071-42	44
6.5	69	27	90	154	90	2.9	22.400	-S400	071-42	44
6.3	70	26	93	150	93	2.0	23.000	-S220	071-42	40
6.3	71	26	93	150	93	1.2	23.048	-S130	071-42	36
5.8	76	24	101	138	101	1.1	24.967	-S130	071-42	36
5.8	77	24	101	138	101	2.9	25.056	-S660	071-42	48
5.7	77	24	102	136	102	2.9	25.308	-S400	071-42	44
5.5	81	23	106	131	106	1.8	26.422	-S220	071-42	40
5.1	87	21	115	121	115	2.9	28.548	-S660	071-42	48
5.0	89	21	117	118	117	2.6	29.156	-S400	071-42	44
4.8	92	20	121	115	121	1.6	29.937	-S220	071-42	40
4.7	95	19	126	111	126	2.7	31.167	-S660	071-42	48
4.4	101	18	132	105	132	1.6	32.867	-S220	071-42	40



Selection tables, 4-pole motors

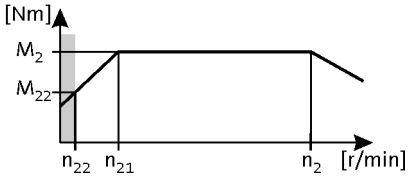

120 Hz: P_N = 1.5 kW

2-stage gearboxes

Inverter operation							i	Product		
5 Hz -		- 20 Hz		- 120 Hz (1:24)						
n_{22} [r/min]	M_{22} [Nm]	n_{21} [r/min]	M_2 [Nm]	n_2 [r/min]	M_2 [Nm]	c		g500	MF□MA□□	
4.4	101	18	133	105	133	2.9	32.940	-S400	071-42	44
4.1	109	17	143	97	143	2.7	35.511	-S660	071-42	48
4.0	111	17	146	95	146	2.5	36.267	-S400	071-42	44
3.9	114	16	150	93	150	1.4	37.238	-S220	071-42	40
3.6	123	15	162	86	162	2.5	40.333	-S660	071-42	48
3.5	125	15	165	84	165	2.3	40.974	-S400	071-42	44
3.4	130	14	171	81	171	1.2	42.533	-S220	071-42	40
3.2	141	13	185	75	185	2.5	45.956	-S660	071-42	48
3.1	144	13	189	74	189	1.6	46.933	-S400	071-42	44
3.0	147	13	194	72	194	1.1	48.190	-S220	071-42	40
3.0	150	12	197	71	197	2.1	48.950	-S660	071-42	48
2.8	158	12	208	67	208	1.0	51.620	-S220	071-42	40
2.7	162	11	214	65	214	1.6	53.026	-S400	071-42	44
2.6	171	11	225	62	225	2.1	55.773	-S660	071-42	48
2.5	174	11	229	61	229	1.1	56.960	-S400	071-42	44
2.3	197	9.3	259	54	259	1.1	64.354	-S400	071-42	44

3-stage gearboxes

Inverter operation							i	Product		
5 Hz -		- 20 Hz		- 120 Hz (1:24)						
n_{22} [r/min]	M_{22} [Nm]	n_{21} [r/min]	M_2 [Nm]	n_2 [r/min]	M_2 [Nm]	c		g500	MF□MA□□	
2.3	192	9.4	253	54	253	2.2	63.817	-S660	071-42	48
2.1	210	8.6	277	49	277	2.1	69.813	-S660	071-42	48
2.0	219	8.3	289	47	289	2.2	72.713	-S660	071-42	48
2.0	224	8.1	295	47	295	1.3	74.260	-S400	071-42	44
1.8	240	7.5	316	43	316	2.0	79.545	-S660	071-42	48
1.7	253	7.2	333	41	333	1.2	83.900	-S400	071-42	44
1.6	268	6.7	353	39	353	1.8	89.048	-S660	071-42	48
1.5	286	6.3	377	36	377	1.0	94.984	-S400	071-42	44
1.4	306	5.9	403	34	403	1.6	101.460	-S660	071-42	48
1.3	329	5.5	433	32	433	1.5	109.083	-S660	071-42	48
1.2	374	4.8	493	28	493	1.3	124.289	-S660	071-42	48
1.1	413	4.4	544	25	544	1.2	137.133	-S660	071-42	48
0.9	471	3.8	620	22	620	1.0	156.249	-S660	071-42	48



Selection tables, 4-pole motors

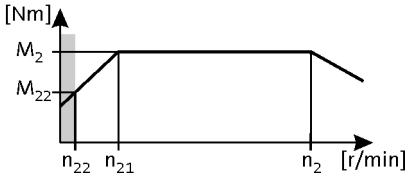

120 Hz: P_N = 2.2 kW

2-stage gearboxes

Inverter operation							i	Product		
5 Hz -		- 20 Hz		- 120 Hz (1:24)						
n_{22} [r/min]	M_{22} [Nm]	n_{21} [r/min]	M_2 [Nm]	n_2 [r/min]	M_2 [Nm]	c		g500	MF□MA□□	
25	26	102	34	597	34	4.0	5.860	-S400	080-32	44
23	28	93	37	545	37	1.8	6.425	-S130	080-32	36
21	31	85	41	498	41	1.7	7.029	-S130	080-32	36
12	52	51	69	295	69	2.4	11.876	-S220	080-32	40
11	57	46	76	269	76	2.2	12.992	-S220	080-32	40
11	59	45	78	260	78	2.1	13.456	-S220	080-32	40
9.9	64	41	85	240	85	1.2	14.606	-S130	080-32	36
9.9	64	41	86	238	86	1.9	14.720	-S220	080-32	40
9.8	65	41	86	236	86	3.5	14.806	-S400	080-32	44
9.1	70	38	93	219	93	1.1	15.979	-S130	080-32	36
9.0	71	37	94	216	94	3.2	16.197	-S400	080-32	44
8.8	72	36	97	211	97	1.7	16.571	-S220	080-32	40
8.0	79	33	105	194	105	1.1	18.069	-S130	080-32	36
7.9	80	33	106	191	106	3.2	18.286	-S400	080-32	44
7.7	82	32	109	186	109	1.7	18.776	-S220	080-32	40
7.1	89	30	118	172	118	1.6	20.300	-S220	080-32	40
7.0	90	29	120	169	120	2.9	20.659	-S400	080-32	44
6.5	98	27	130	156	130	2.6	22.400	-S400	080-32	44
6.3	100	26	134	152	134	1.4	23.000	-S220	080-32	40
5.7	111	24	147	138	147	2.3	25.308	-S400	080-32	44
5.5	115	23	154	133	154	1.2	26.422	-S220	080-32	40
5.0	127	21	170	120	170	2.0	29.156	-S400	080-32	44
4.8	131	20	174	117	174	1.1	29.937	-S220	080-32	40
4.4	144	18	191	107	191	1.1	32.867	-S220	080-32	40
4.4	144	18	192	106	192	2.0	32.940	-S400	080-32	44
4.1	155	17	207	99	207	3.0	35.511	-S660	080-32	48
4.0	158	17	211	97	211	1.8	36.267	-S400	080-32	44
3.6	176	15	235	87	235	2.2	40.333	-S660	080-32	48
3.5	179	15	239	85	239	1.6	40.974	-S400	080-32	44
3.2	201	13	268	76	268	2.2	45.956	-S660	080-32	48
3.0	214	12	285	72	285	1.5	48.950	-S660	080-32	48
2.6	244	11	325	63	325	1.5	55.773	-S660	080-32	48

3-stage gearboxes

Inverter operation							i	Product		
5 Hz -		- 20 Hz		- 120 Hz (1:24)						
n_{22} [r/min]	M_{22} [Nm]	n_{21} [r/min]	M_2 [Nm]	n_2 [r/min]	M_2 [Nm]	c		g500	MF□MA□□	
2.3	274	9.4	366	55	366	1.5	63.817	-S660	080-32	48
2.1	300	8.6	400	50	400	1.4	69.813	-S660	080-32	48
2.0	313	8.3	417	48	417	1.5	72.713	-S660	080-32	48



Selection tables, 4-pole motors

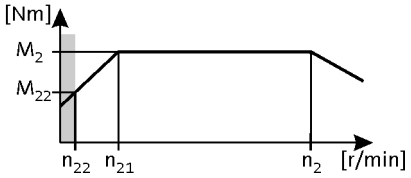

120 Hz: P_N = 2.2 kW

3-stage gearboxes

Inverter operation							i	Product		
5 Hz -		- 20 Hz		- 120 Hz (1:24)						
n_{22} [r/min]	M_{22} [Nm]	n_{21} [r/min]	M_2 [Nm]	n_2 [r/min]	M_2 [Nm]	c		g500	MF□MA□□	
1.8	342	7.5	456	44	456	1.4	79.545	-S660	080-32	48
1.6	383	6.7	511	39	511	1.2	89.048	-S660	080-32	48
1.4	436	5.9	582	35	582	1.1	101.460	-S660	080-32	48
1.3	469	5.5	626	32	626	1.0	109.083	-S660	080-32	48



Selection tables, 4-pole motors

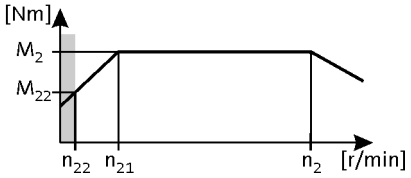

120 Hz: P_N = 3.0 kW

2-stage gearboxes

Inverter operation							i	Product		
5 Hz -		- 30 Hz		- 120 Hz (1:24)						
n_{22} [r/min]	M_{22} [Nm]	n_{21} [r/min]	M_2 [Nm]	n_2 [r/min]	M_2 [Nm]	c		g500	MF□MA□□	
25	35	154	47	594	47	2.9	5.860	-S400	080-42	44
23	38	140	51	543	51	2.9	6.411	-S400	080-42	44
23	39	140	51	542	51	1.3	6.425	-S130	080-42	36
21	41	131	55	506	55	3.1	6.880	-S660	080-42	48
21	42	128	56	495	56	1.2	7.029	-S130	080-42	36
13	68	80	90	309	90	3.1	11.262	-S660	080-42	48
12	71	76	95	293	95	1.8	11.876	-S220	080-42	40
12	74	73	98	283	98	3.1	12.320	-S660	080-42	48
11	77	70	102	271	102	3.1	12.832	-S660	080-42	48
11	78	69	104	268	104	1.6	12.992	-S220	080-42	40
11	79	69	105	266	105	2.9	13.105	-S400	080-42	44
11	81	67	107	259	107	1.6	13.456	-S220	080-42	40
10	84	64	112	248	112	3.1	14.037	-S660	080-42	48
10	86	63	115	243	115	2.6	14.336	-S400	080-42	44
9.9	88	61	118	236	118	1.4	14.720	-S220	080-42	40
9.8	89	61	118	235	118	2.6	14.806	-S400	080-42	44
9.2	94	57	126	222	126	2.9	15.714	-S660	080-42	48
9.0	97	56	129	215	129	2.3	16.197	-S400	080-42	44
8.8	99	54	132	210	132	1.3	16.571	-S220	080-42	40
8.1	107	50	143	194	143	2.9	17.905	-S660	080-42	48
7.9	110	49	146	190	146	2.4	18.286	-S400	080-42	44
7.7	113	48	150	185	150	1.3	18.776	-S220	080-42	40
7.5	115	47	154	181	154	2.9	19.250	-S660	080-42	48
7.1	122	44	162	171	162	1.2	20.300	-S220	080-42	40
7.0	124	44	165	168	165	2.1	20.659	-S400	080-42	44
6.6	131	41	175	159	175	2.9	21.933	-S660	080-42	48
6.5	134	40	179	155	179	1.9	22.400	-S400	080-42	44
6.3	138	39	184	151	184	1.0	23.000	-S220	080-42	40
5.8	150	36	200	139	200	2.5	25.056	-S660	080-42	48
5.7	152	36	202	138	202	1.7	25.308	-S400	080-42	44
5.1	171	32	228	122	228	2.5	28.548	-S660	080-42	48
5.0	175	31	233	119	233	1.5	29.156	-S400	080-42	44
4.7	187	29	249	112	249	2.5	31.167	-S660	080-42	48
4.4	197	27	263	106	263	1.5	32.940	-S400	080-42	44
4.1	213	25	284	98	284	2.2	35.511	-S660	080-42	48



Selection tables, 4-pole motors

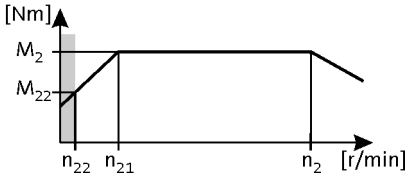

120 Hz: P_N = 3.0 kW

2-stage gearboxes

Inverter operation							i	Product		
5 Hz -		- 30 Hz		- 120 Hz (1:24)						
n_{22} [r/min]	M_{22} [Nm]	n_{21} [r/min]	M_2 [Nm]	n_2 [r/min]	M_2 [Nm]	c		g500	MF□MA□□	
4.0	217	25	290	96	290	1.3	36.267	-S400	080-42	44
3.6	242	22	322	86	322	1.6	40.333	-S660	080-42	48
3.5	245	22	327	85	327	1.2	40.974	-S400	080-42	44
3.2	275	20	367	76	367	1.6	45.956	-S660	080-42	48
3.0	293	18	391	71	391	1.1	48.950	-S660	080-42	48
2.6	334	16	445	62	445	1.1	55.773	-S660	080-42	48

3-stage gearboxes

Inverter operation							i	Product		
5 Hz -		- 30 Hz		- 120 Hz (1:24)						
n_{22} [r/min]	M_{22} [Nm]	n_{21} [r/min]	M_2 [Nm]	n_2 [r/min]	M_2 [Nm]	c		g500	MF□MA□□	
2.3	377	14	502	55	502	1.1	63.817	-S660	080-42	48
2.1	412	13	549	50	549	1.0	69.813	-S660	080-42	48
2.0	429	12	572	48	572	1.1	72.713	-S660	080-42	48
1.8	469	11	626	44	626	1.0	79.545	-S660	080-42	48



Selection tables, 4-pole motors

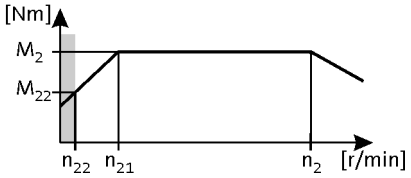

120 Hz: P_N = 4.0 kW

2-stage gearboxes

Inverter operation							i	Product		
5 Hz -		- 20 Hz		- 120 Hz (1:24)						
n_{22} [r/min]	M_{22} [Nm]	n_{21} [r/min]	M_2 [Nm]	n_2 [r/min]	M_2 [Nm]	c		g500	MF□MA□□	
25	44	102	62	594	62	2.7	5.860	-S400	090-32	44
23	48	94	68	543	68	2.7	6.411	-S400	090-32	44
21	51	87	73	506	73	2.9	6.880	-S660	090-32	48
13	84	53	120	309	120	2.9	11.262	-S660	090-32	48
12	92	49	131	283	131	2.9	12.320	-S660	090-32	48
11	96	47	137	271	137	2.9	12.832	-S660	090-32	48
11	98	46	140	266	140	2.2	13.105	-S400	090-32	44
10	105	43	149	248	149	2.9	14.037	-S660	090-32	48
10	107	42	153	243	153	2.0	14.336	-S400	090-32	44
9.8	110	41	158	235	158	1.9	14.806	-S400	090-32	44
9.2	117	38	167	222	167	2.7	15.714	-S660	090-32	48
9.0	121	37	172	215	172	1.8	16.197	-S400	090-32	44
8.1	134	34	191	194	191	2.6	17.905	-S660	090-32	48
7.9	136	33	195	190	195	1.8	18.286	-S400	090-32	44
7.5	144	31	205	181	205	2.8	19.250	-S660	090-32	48
7.0	154	29	220	168	220	1.6	20.659	-S400	090-32	44
6.6	164	27	234	159	234	2.4	21.933	-S660	090-32	48
6.5	167	27	239	155	239	1.4	22.400	-S400	090-32	44
5.8	187	24	267	139	267	1.9	25.056	-S660	090-32	48
5.7	189	24	270	138	270	1.3	25.308	-S400	090-32	44
5.1	213	21	304	122	304	1.9	28.548	-S660	090-32	48
5.0	217	21	310	119	310	1.1	29.156	-S400	090-32	44
4.7	232	19	332	112	332	1.9	31.167	-S660	090-32	48
4.4	246	18	351	106	351	1.1	32.940	-S400	090-32	44
4.1	265	17	378	98	378	1.7	35.511	-S660	090-32	48
3.6	301	15	430	86	430	1.2	40.333	-S660	090-32	48
3.2	343	13	489	76	489	1.2	45.956	-S660	090-32	48



Selection tables, 4-pole motors

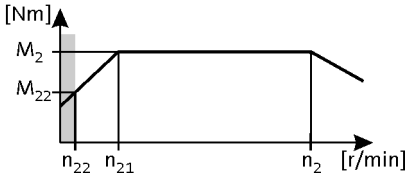

120 Hz: P_N = 5.5 kW

2-stage gearboxes

Inverter operation							i	Product		
5 Hz -		- 20 Hz		- 120 Hz (1:24)						
n_{22} [r/min]	M_{22} [Nm]	n_{21} [r/min]	M_2 [Nm]	n_2 [r/min]	M_2 [Nm]	c		g500	MF□MA□□	
25	59	102	85	602	85	2.3	5.860	-S400	100-12	44
23	65	94	93	550	93	2.1	6.411	-S400	100-12	44
13	114	53	163	313	163	3.1	11.262	-S660	100-12	48
12	125	49	178	286	178	2.8	12.320	-S660	100-12	48
11	130	47	185	275	185	2.7	12.832	-S660	100-12	48
11	133	46	189	269	189	1.6	13.105	-S400	100-12	44
10	142	43	203	251	203	2.5	14.037	-S660	100-12	48
10	145	42	207	246	207	1.5	14.336	-S400	100-12	44
9.2	159	38	227	224	227	2.2	15.714	-S660	100-12	48
8.1	181	34	259	197	259	1.9	17.905	-S660	100-12	48
7.9	185	33	264	193	264	1.3	18.286	-S400	100-12	44
7.5	195	31	278	183	278	2.0	19.250	-S660	100-12	48
7.0	209	29	299	171	299	1.1	20.659	-S400	100-12	44
6.6	222	27	317	161	317	1.8	21.933	-S660	100-12	48
6.5	227	27	324	157	324	1.1	22.400	-S400	100-12	44
5.8	254	24	362	141	362	1.4	25.056	-S660	100-12	48
5.1	289	21	413	124	413	1.4	28.548	-S660	100-12	48
4.7	315	19	451	113	451	1.4	31.167	-S660	100-12	48
4.1	359	17	513	99	513	1.2	35.511	-S660	100-12	48



Selection tables, 4-pole motors

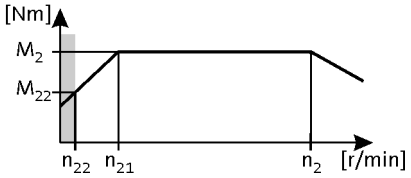

120 Hz: P_N = 7.5 kW

2-stage gearboxes

Inverter operation							i	Product		
5 Hz -		- 20 Hz		- 120 Hz (1:24)						
n_{22} [r/min]	M_{22} [Nm]	n_{21} [r/min]	M_2 [Nm]	n_2 [r/min]	M_2 [Nm]	c		g500	MF□MA□□	
25	81	102	116	600	116	1.7	5.860	-S400	100-32	44
23	89	94	127	548	127	1.6	6.411	-S400	100-32	44
21	95	87	136	511	136	2.6	6.880	-S660	100-32	48
13	156	53	223	312	223	2.2	11.262	-S660	100-32	48
12	171	49	244	285	244	2.0	12.320	-S660	100-32	48
11	178	47	254	274	254	2.0	12.832	-S660	100-32	48
9.2	218	38	311	224	311	1.6	15.714	-S660	100-32	48
7.5	266	31	381	183	381	1.5	19.250	-S660	100-32	48
6.6	304	27	434	160	434	1.3	21.933	-S660	100-32	48
5.8	347	24	495	140	495	1.0	25.056	-S660	100-32	48
5.1	395	21	564	123	564	1.0	28.548	-S660	100-32	48
4.7	431	19	616	113	616	1.0	31.167	-S660	100-32	48



Dimensions, notes

Notes on the dimensions

The following legend shows the layout of the dimension sheets.

Product gearbox

g500-S130

Driven shaft design

Abmessungen mit Hohlwelle

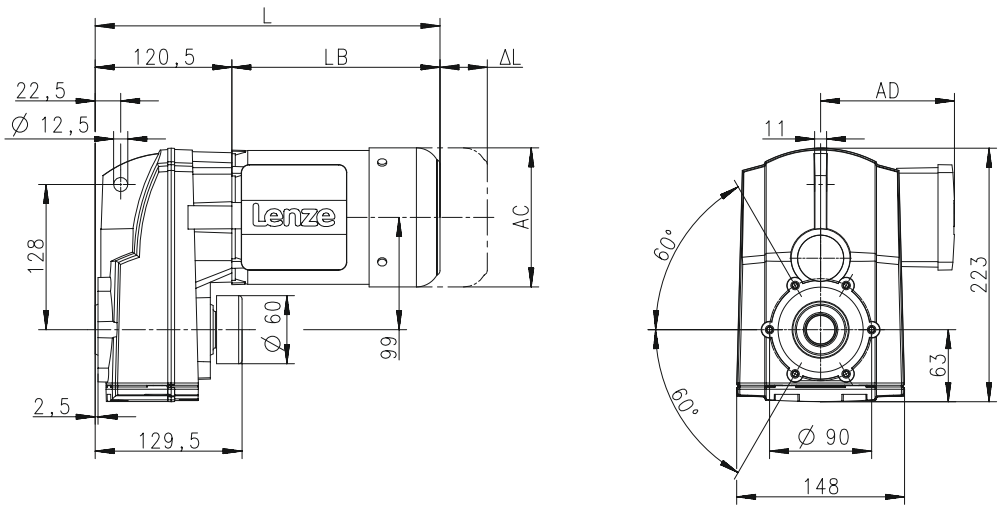

Product Motor

Produkt			MD□MA□□							
			063-12	063-32	063-42	071-32	071-42	080-32	080-42	090-32
Abmessungen										
Gesamtlänge	**L**	**[mm]**		304		324		347		380
Länge Motor	**LB**	**[mm]**		183		203		226		259
Länge Motoranbauten	**Δ L**	**[mm]**		170		165		183		181
Motordurchmesser	**AC**	**[mm]**		123		139		156		176
Abstand Motor/Anschluss	**AD**	**[mm]**		100		109		150		157

Distance of motor centre to the end of terminal box

Total length of the drive without built-on accessories

Motor diameter

Motor length without built-on accessories

Additional length of the built-on accessories (longest version)

6.5



Dimensions, 4-pole motors

g500-S130

Dimensions with hollow shaft

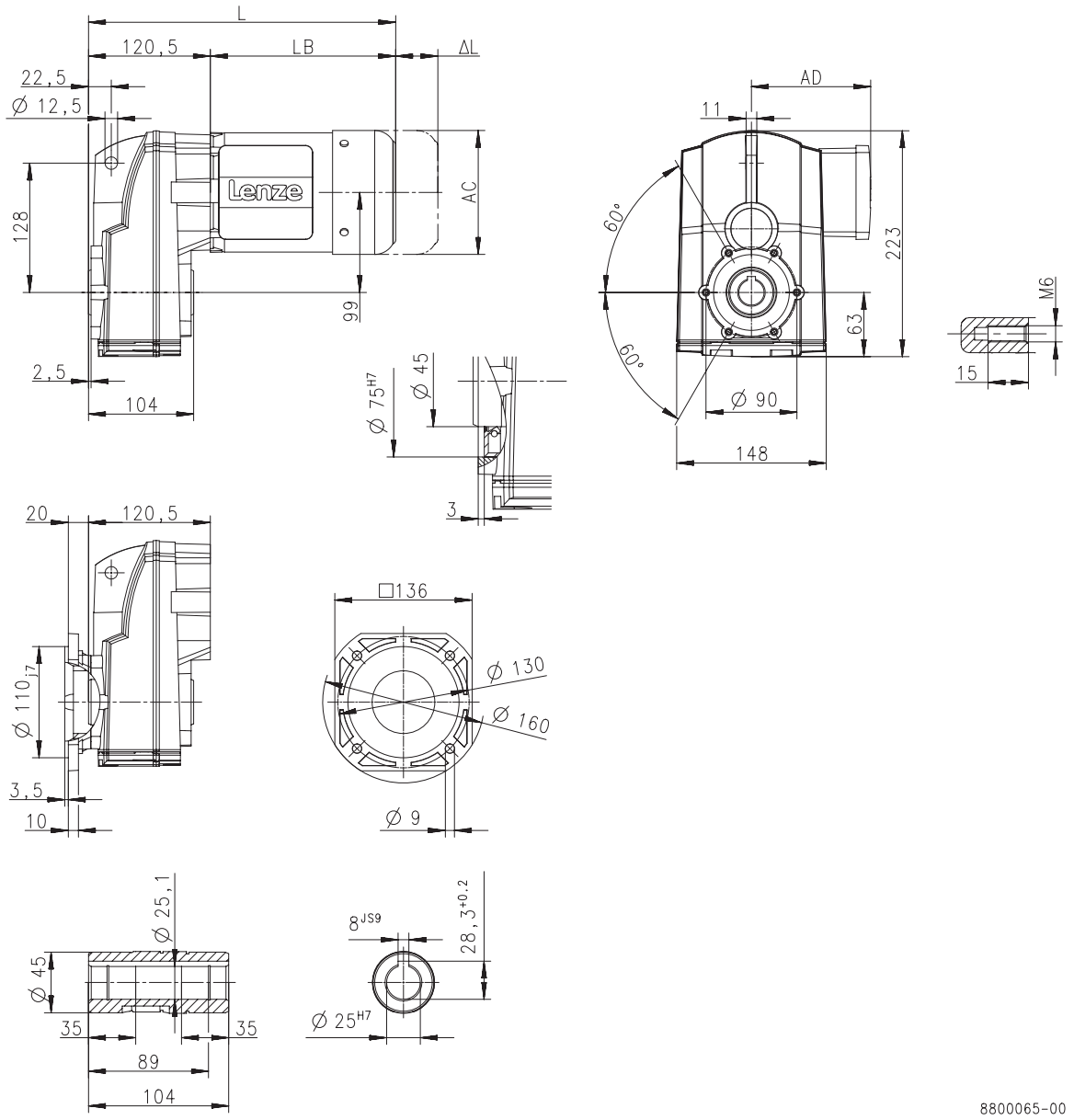

Product			MF□MA□□					
			063-32	063-42	071-32	071-42	080-32	080-42
Dimensions								
Total length	**L**	**[mm]**	304		324		347	
Motor length	**LB**	**[mm]**	183		203		226	
Length of motor options	**Δ L**	**[mm]**	170		165		183	
Motor diameter	**AC**	**[mm]**	123		139		156	
Distance motor/connection	**AD**	**[mm]**	100		109		150	



Dimensions, 4-pole motors

g500-S130

Dimensions with solid shaft

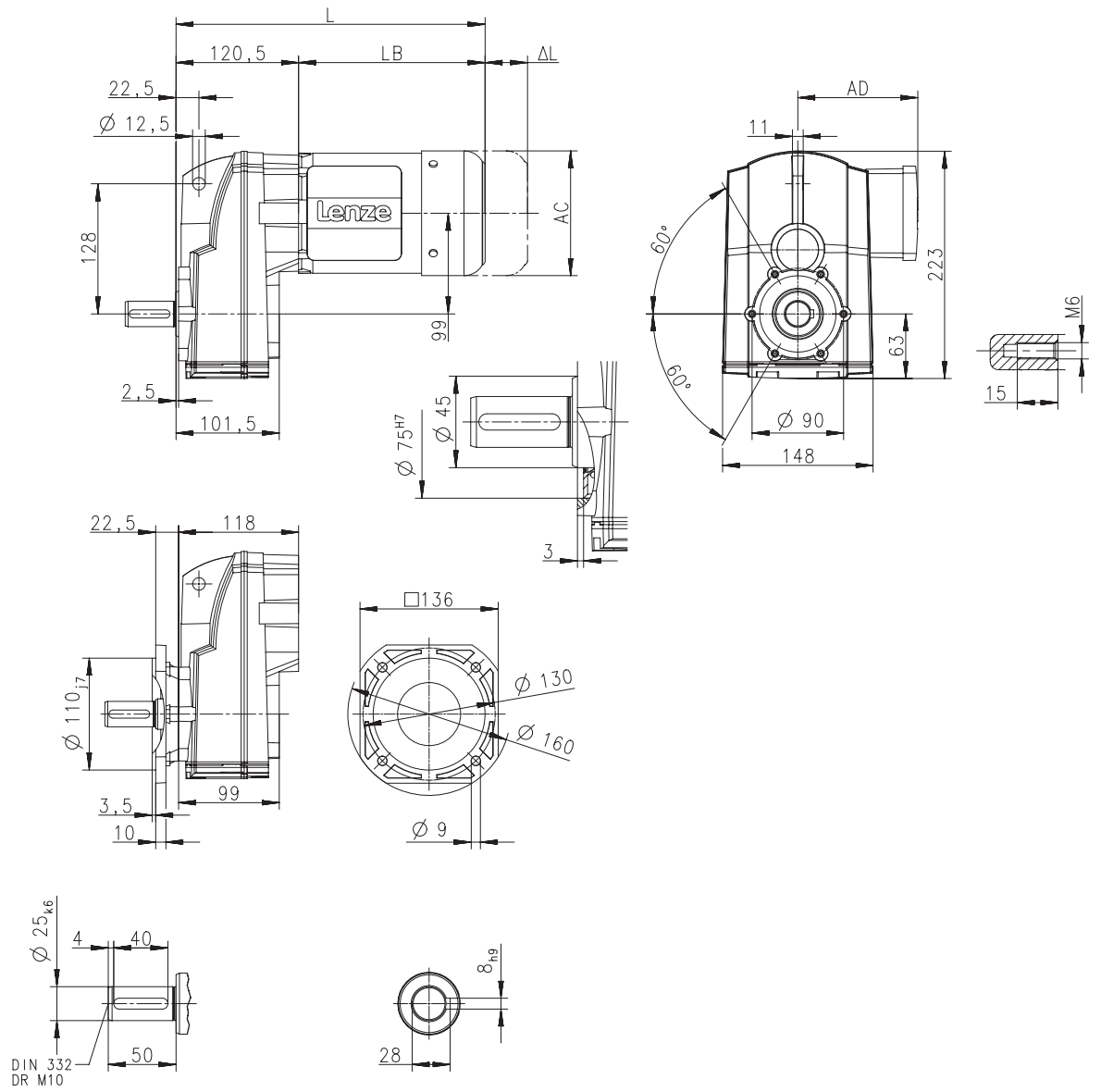

Product			MF□MA□□					
			063-32	063-42	071-32	071-42	080-32	080-42
Dimensions								
Total length	**L**	**[mm]**	304		324		347	
Motor length	**LB**	**[mm]**	183		203		226	
Length of motor options	**Δ L**	**[mm]**	170		165		183	
Motor diameter	**AC**	**[mm]**	123		139		156	
Distance motor/connection	**AD**	**[mm]**	100		109		150	



Dimensions, 4-pole motors

g500-S130

Dimensions with solid shaft and foot

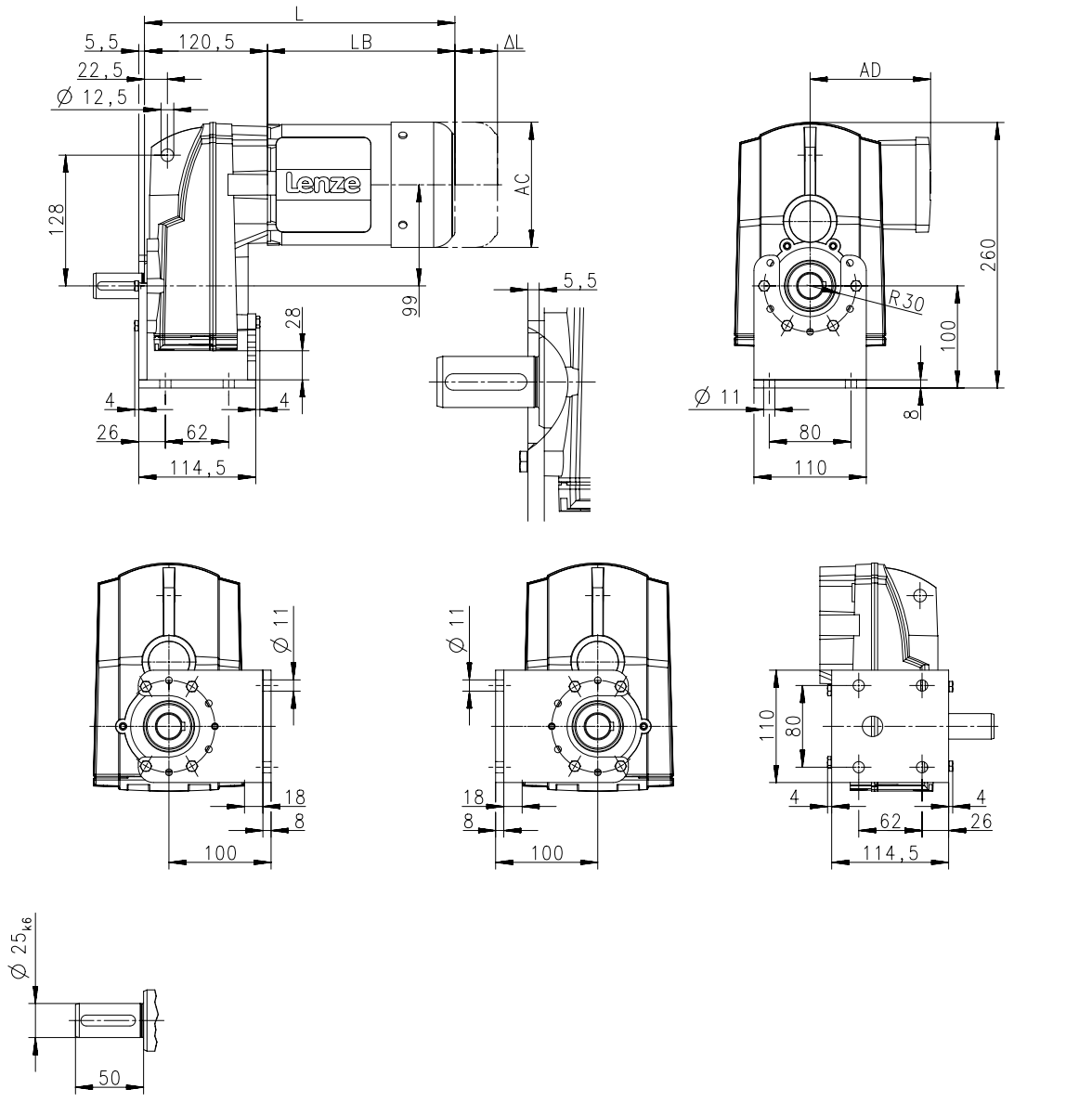

Product			MF□MA□□					
			063-32	063-42	071-32	071-42	080-32	080-42
Dimensions								
Total length	**L**	**[mm]**	304		324		347	
Motor length	**LB**	**[mm]**	183		203		226	
Length of motor options	**Δ L**	**[mm]**	170		165		183	
Motor diameter	**AC**	**[mm]**	123		139		156	
Distance motor/connection	**AD**	**[mm]**	100		109		150	



Dimensions, 4-pole motors

g500-S130

Dimensions with shrink disc

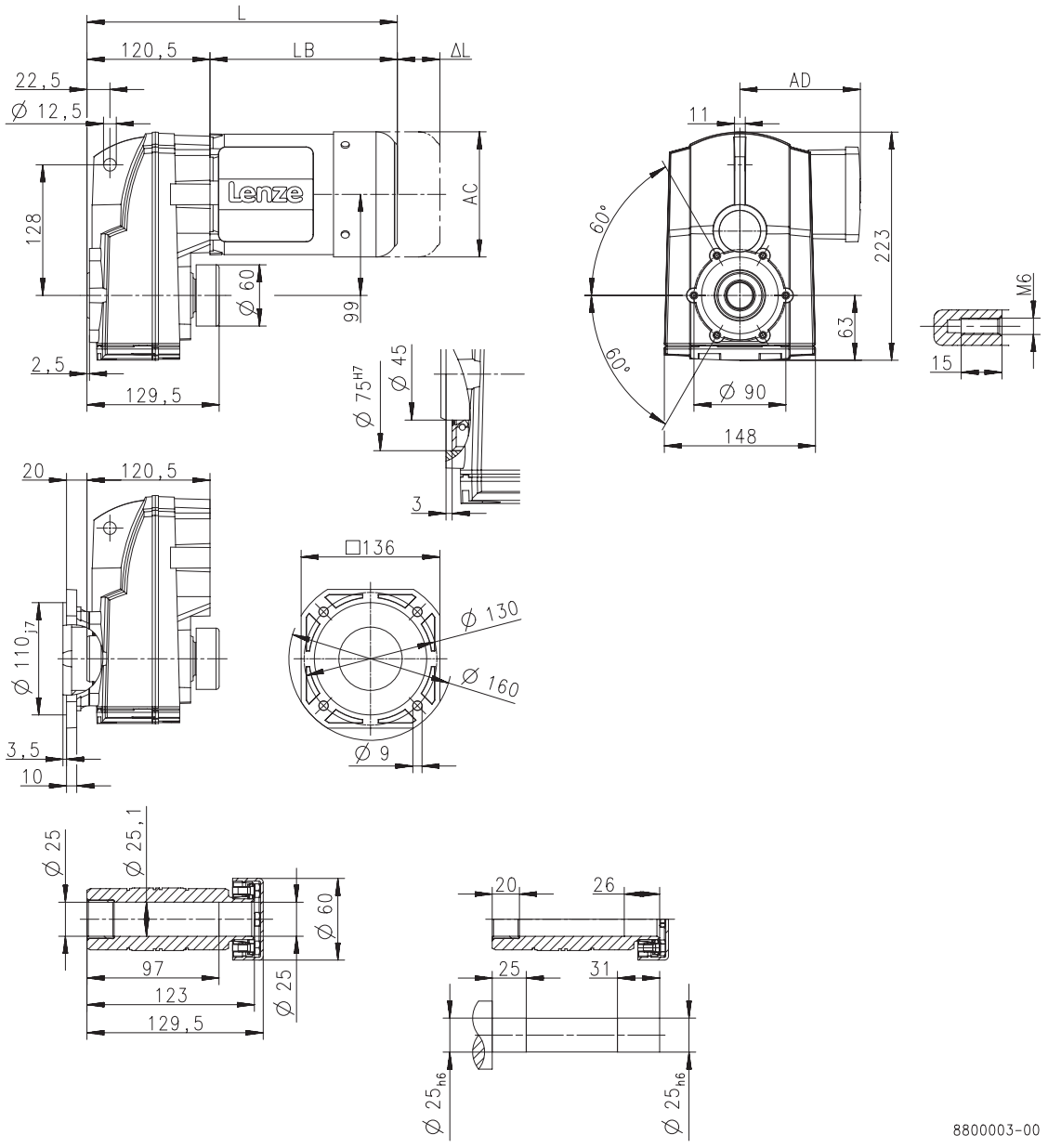

Product			MF□MA□□					
			063-32	063-42	071-32	071-42	080-32	080-42
Dimensions								
Total length	**L**	**[mm]**	304		324		347	
Motor length	**LB**	**[mm]**	183		203		226	
Length of motor options	**Δ L**	**[mm]**	170		165		183	
Motor diameter	**AC**	**[mm]**	123		139		156	
Distance motor/connection	**AD**	**[mm]**	100		109		150	



Dimensions, 4-pole motors

g500-S220

Dimensions with hollow shaft

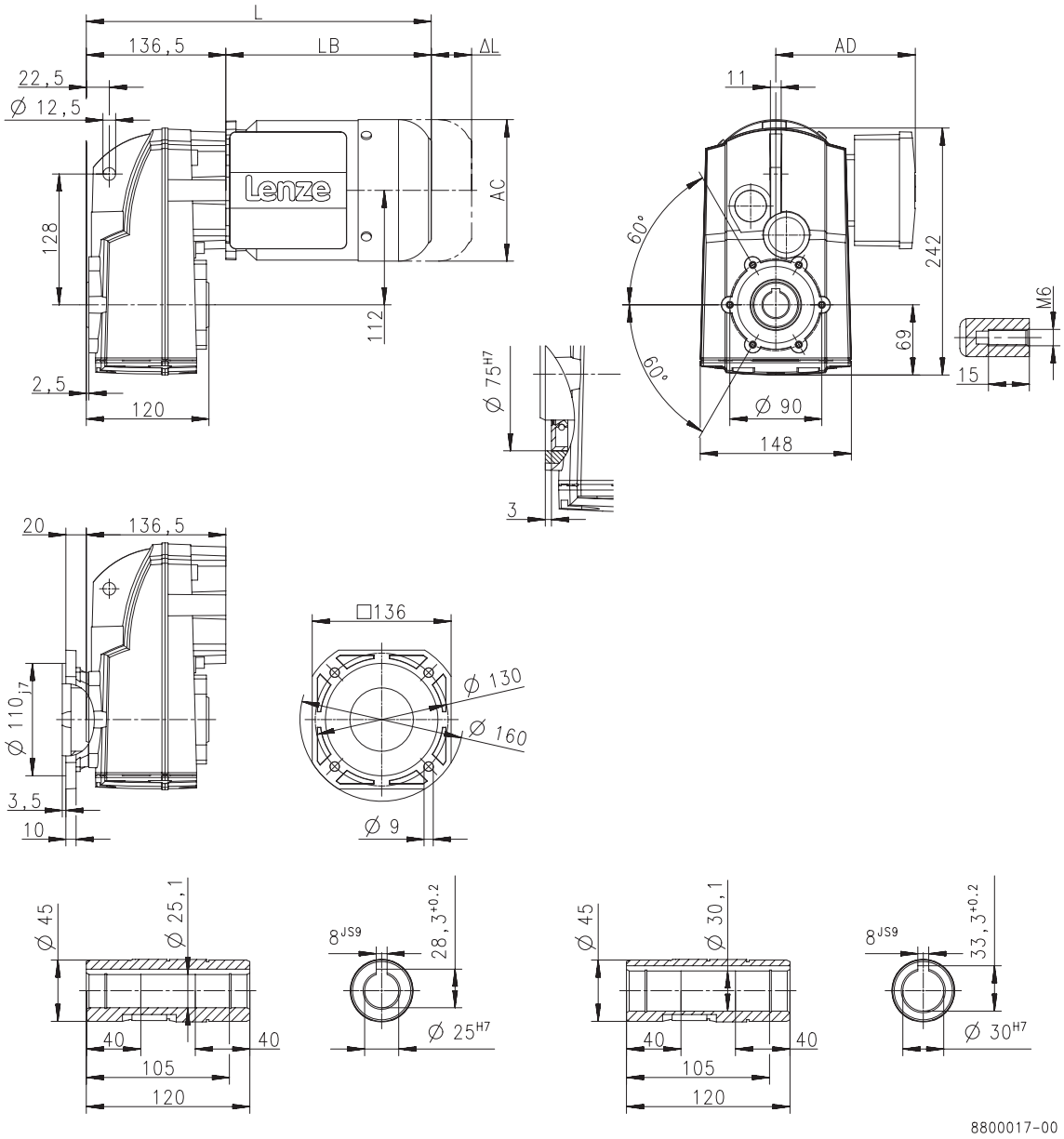

Product			MF□MA□□					
			063-32	063-42	071-32	071-42	080-32	080-42
Dimensions								
Total length	**L**	**[mm]**	320		340		363	
Motor length	**LB**	**[mm]**	183		203		226	
Length of motor options	**Δ L**	**[mm]**	170		165		183	
Motor diameter	**AC**	**[mm]**	123		139		156	
Distance motor/connection	**AD**	**[mm]**	100		109		150	



Dimensions, 4-pole motors

g500-S220

Dimensions with solid shaft

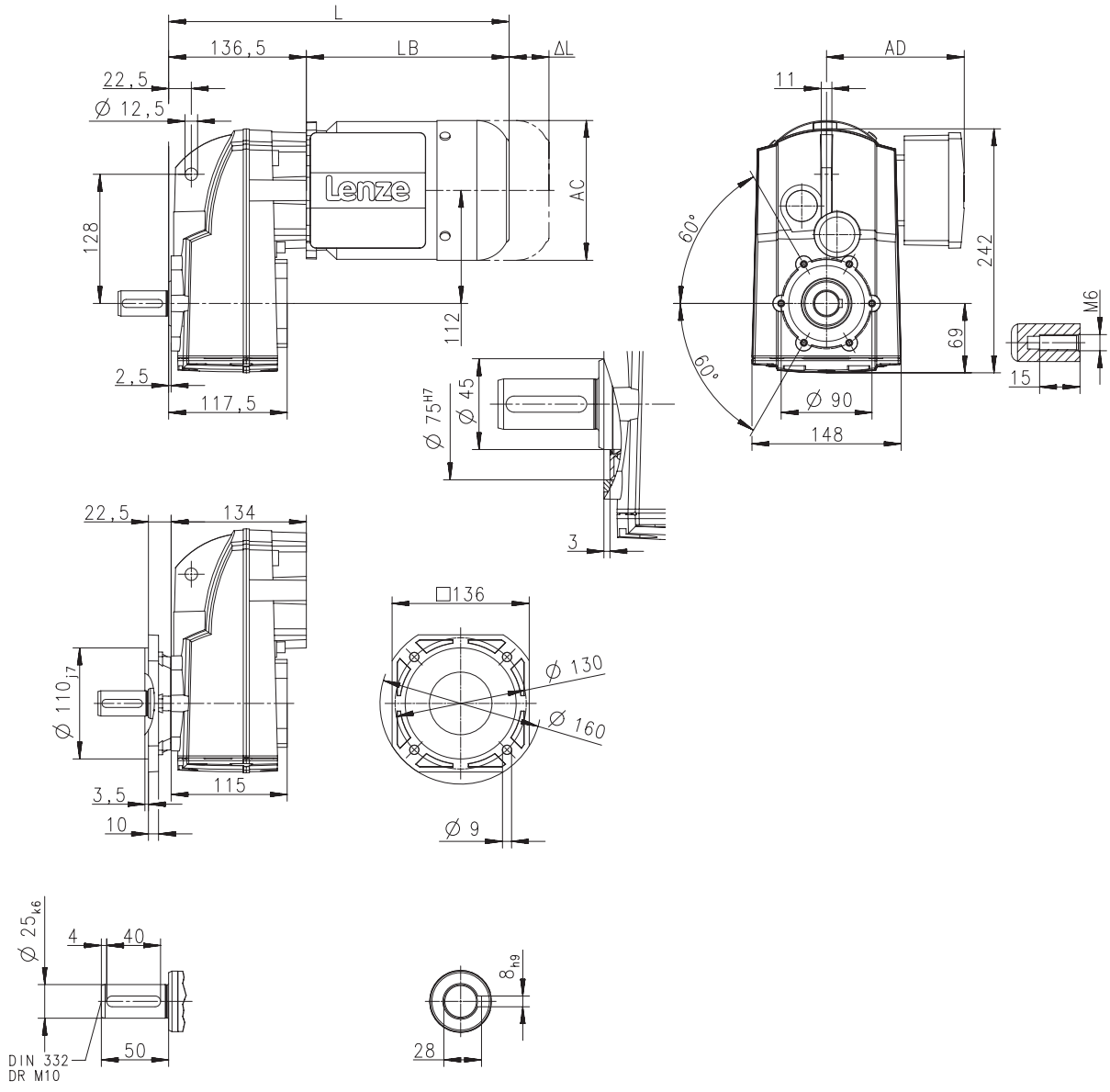

Product			MF□MA□□					
			063-32	063-42	071-32	071-42	080-32	080-42
Dimensions								
Total length	**L**	**[mm]**	320		340		363	
Motor length	**LB**	**[mm]**	183		203		226	
Length of motor options	**Δ L**	**[mm]**	170		165		183	
Motor diameter	**AC**	**[mm]**	123		139		156	
Distance motor/connection	**AD**	**[mm]**	100		109		150	



Dimensions, 4-pole motors

g500-S220

Dimensions with solid shaft and foot

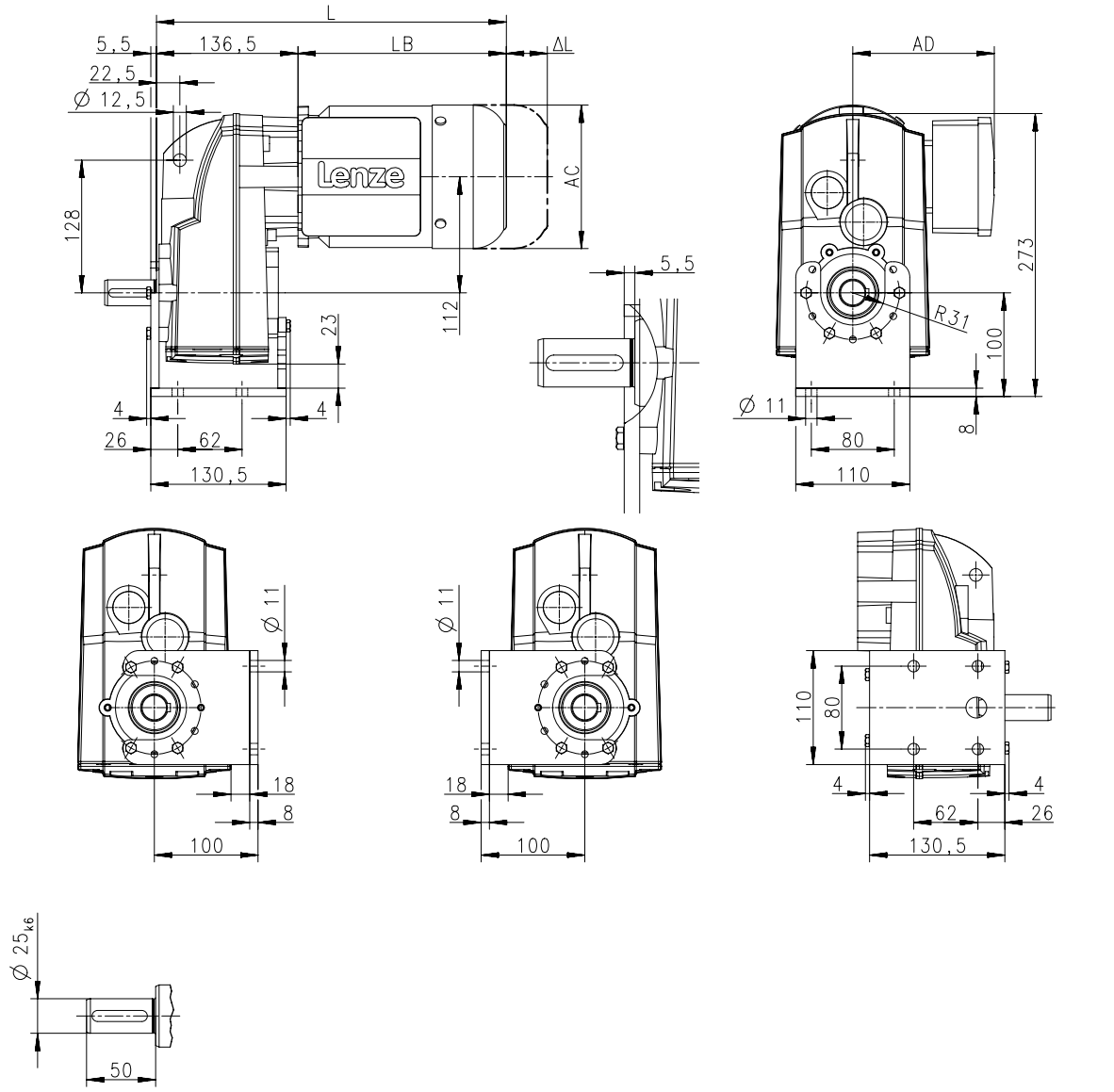

Product			MF□MA□□					
			063-32	063-42	071-32	071-42	080-32	080-42
Dimensions								
Total length	**L**	**[mm]**	320		340		363	
Motor length	**LB**	**[mm]**	183		203		226	
Length of motor options	**Δ L**	**[mm]**	170		165		183	
Motor diameter	**AC**	**[mm]**	123		139		156	
Distance motor/connection	**AD**	**[mm]**	100		109		150	



Dimensions, 4-pole motors

g500-S220

Dimensions with shrink disc

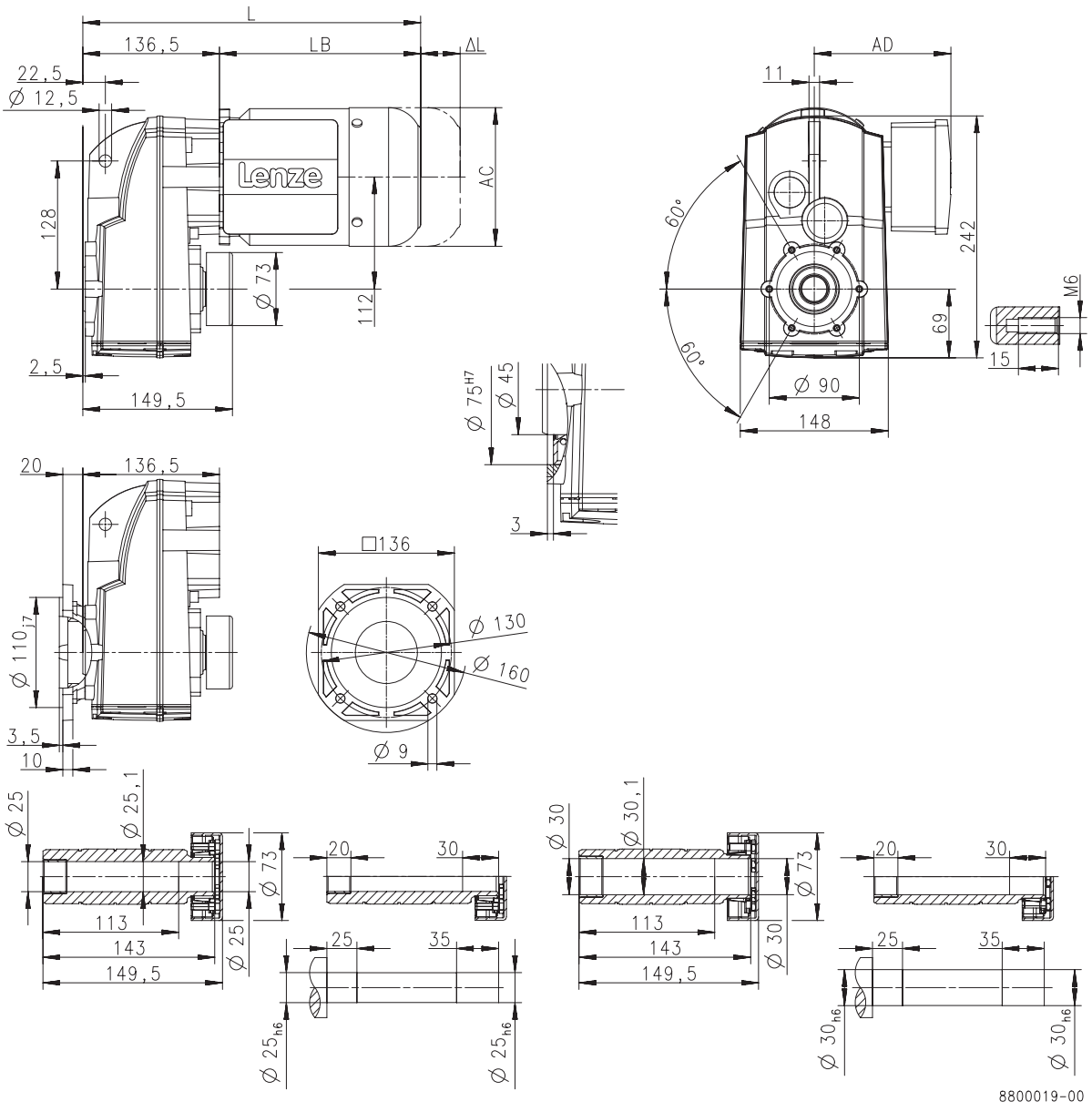

Product			MF□MA□□					
			063-32	063-42	071-32	071-42	080-32	080-42
Dimensions								
Total length	**L**	**[mm]**	320		340		363	
Motor length	**LB**	**[mm]**	183		203		226	
Length of motor options	**Δ L**	**[mm]**	170		165		183	
Motor diameter	**AC**	**[mm]**	123		139		156	
Distance motor/connection	**AD**	**[mm]**	100		109		150	



Dimensions, 4-pole motors

g500-S400

Dimensions with hollow shaft

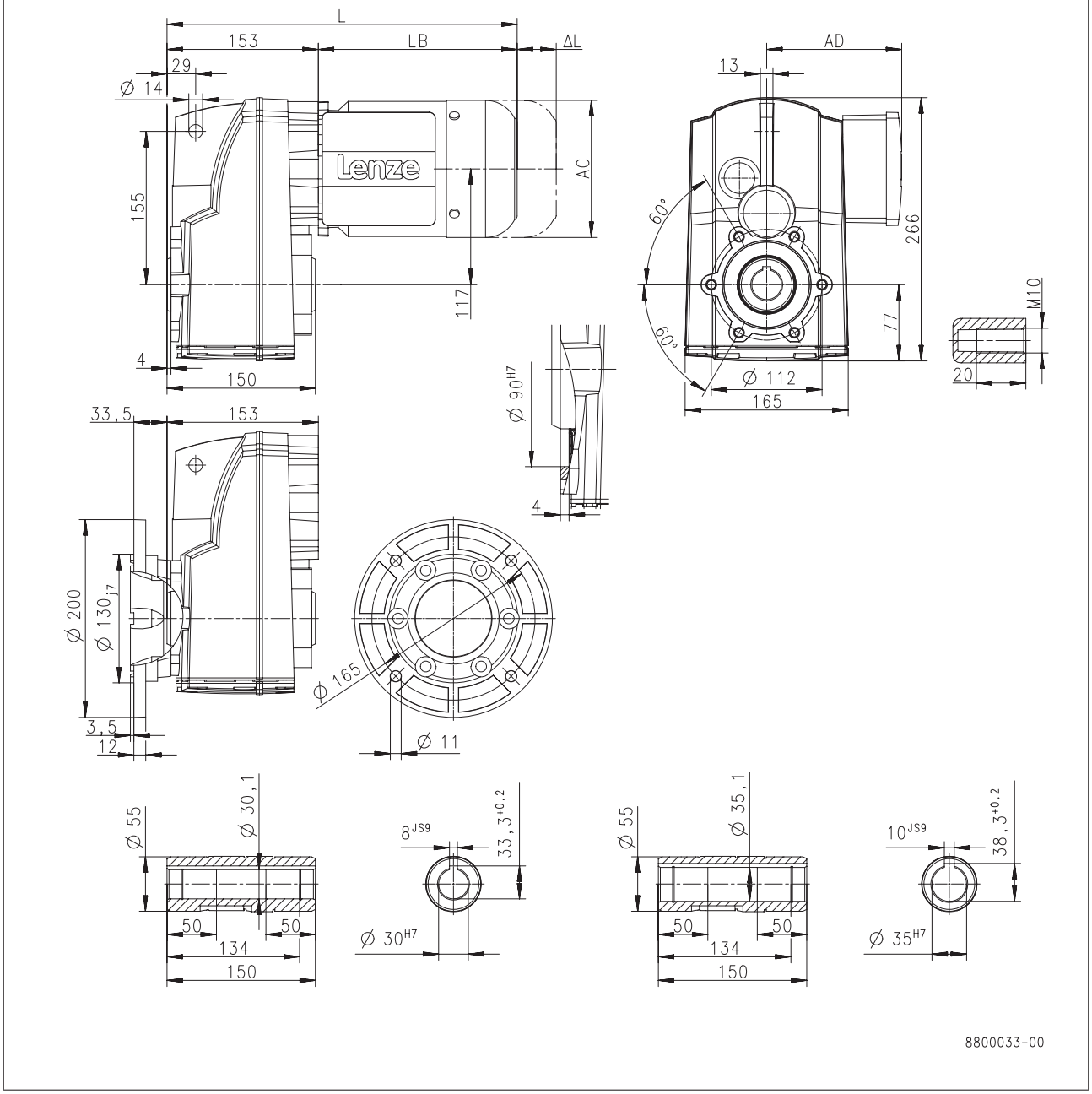

Product			MF□MA□□								
			063-32	063-42	071-32	071-42	080-32	080-42	090-32	100-12	100-32
Dimensions											
Total length	**L**	**[mm]**	336		356		379		427	474	
Motor length	**LB**	**[mm]**	183		203		226		274	321	
Length of motor options	**Δ L**	**[mm]**	170		165		183		181	170	
Motor diameter	**AC**	**[mm]**	123		139		156		176	194	
Distance motor/connection	**AD**	**[mm]**	100		109		150		157	166	



Dimensions, 4-pole motors

g500-S400

Dimensions with solid shaft

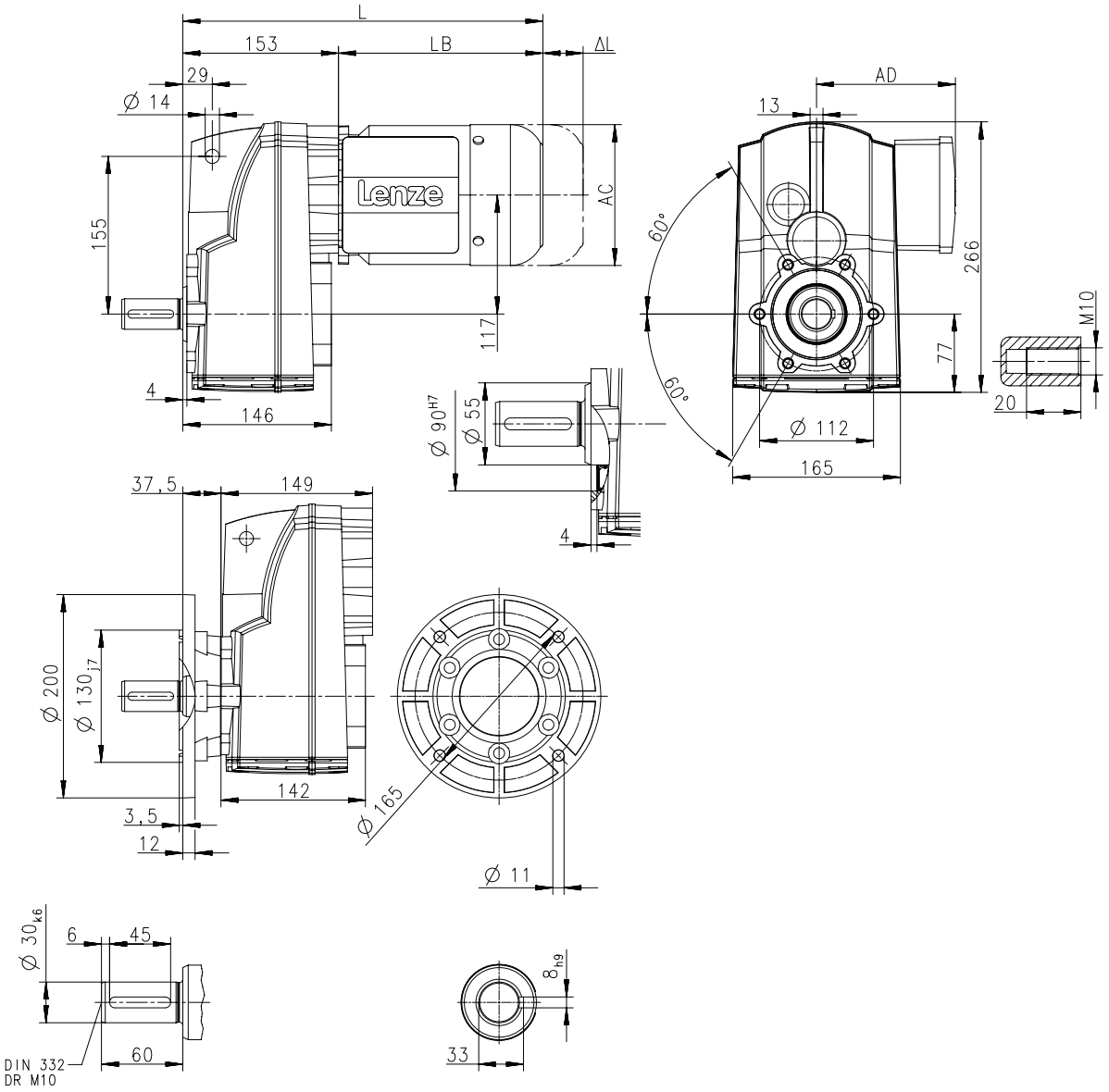

Product			MF□MA□□								
			063-32	063-42	071-32	071-42	080-32	080-42	090-32	100-12	100-32
Dimensions											
Total length	**L**	**[mm]**	336		356		379		427	474	
Motor length	**LB**	**[mm]**	183		203		226		274	321	
Length of motor options	**Δ L**	**[mm]**	170		165		183		181	170	
Motor diameter	**AC**	**[mm]**	123		139		156		176	194	
Distance motor/connection	**AD**	**[mm]**	100		109		150		157	166	



Dimensions, 4-pole motors

g500-S400

Dimensions with solid shaft and foot

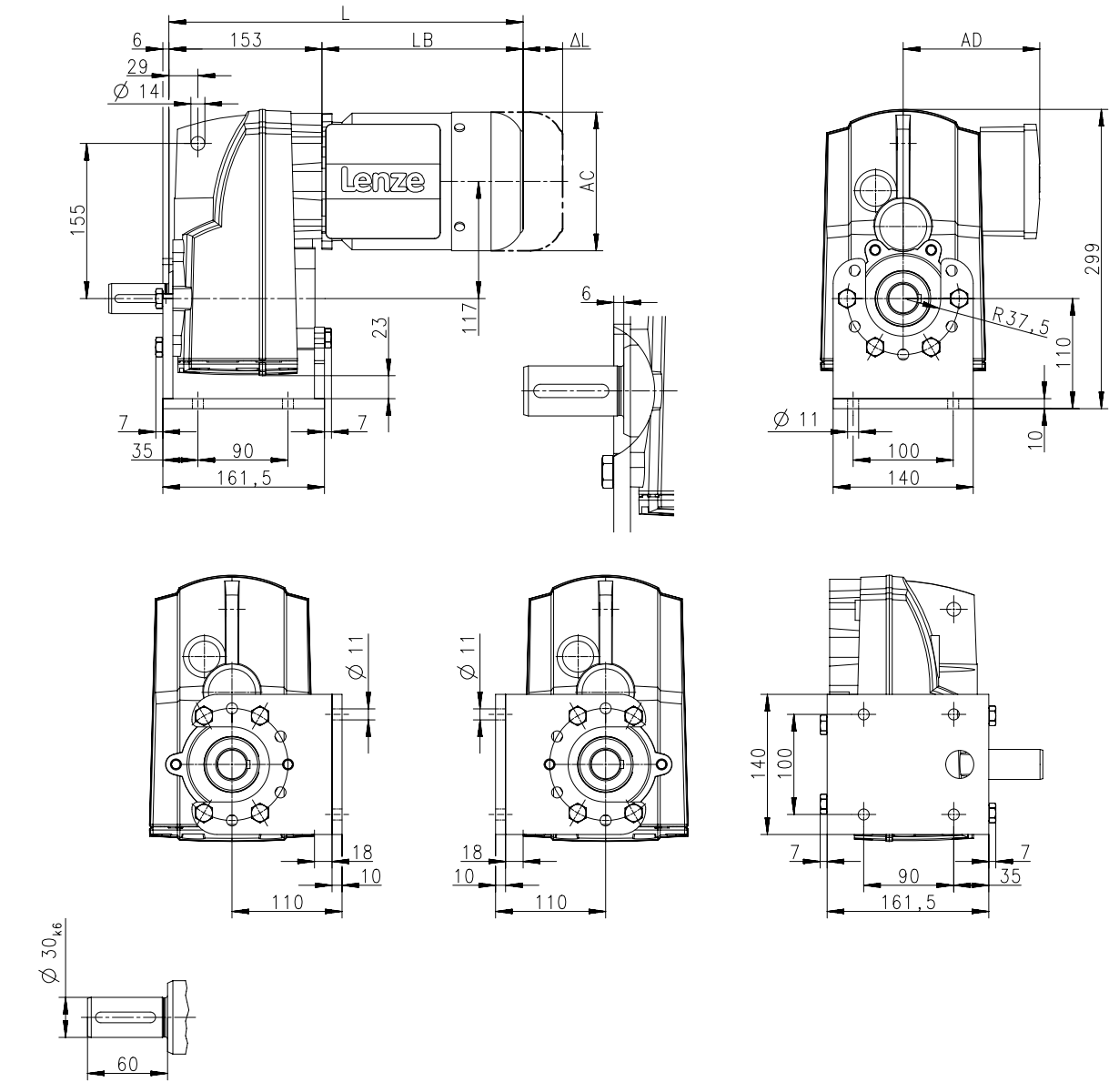

Product			MF□MA□□								
			063-32	063-42	071-32	071-42	080-32	080-42	090-32	100-12	100-32
Dimensions											
Total length	**L**	**[mm]**	336		356		379		427	474	
Motor length	**LB**	**[mm]**	183		203		226		274	321	
Length of motor options	**Δ L**	**[mm]**	170		165		183		181	170	
Motor diameter	**AC**	**[mm]**	123		139		156		176	194	
Distance motor/connection	**AD**	**[mm]**	100		109		150		157	166	



Dimensions, 4-pole motors

g500-S400

Dimensions with shrink disc

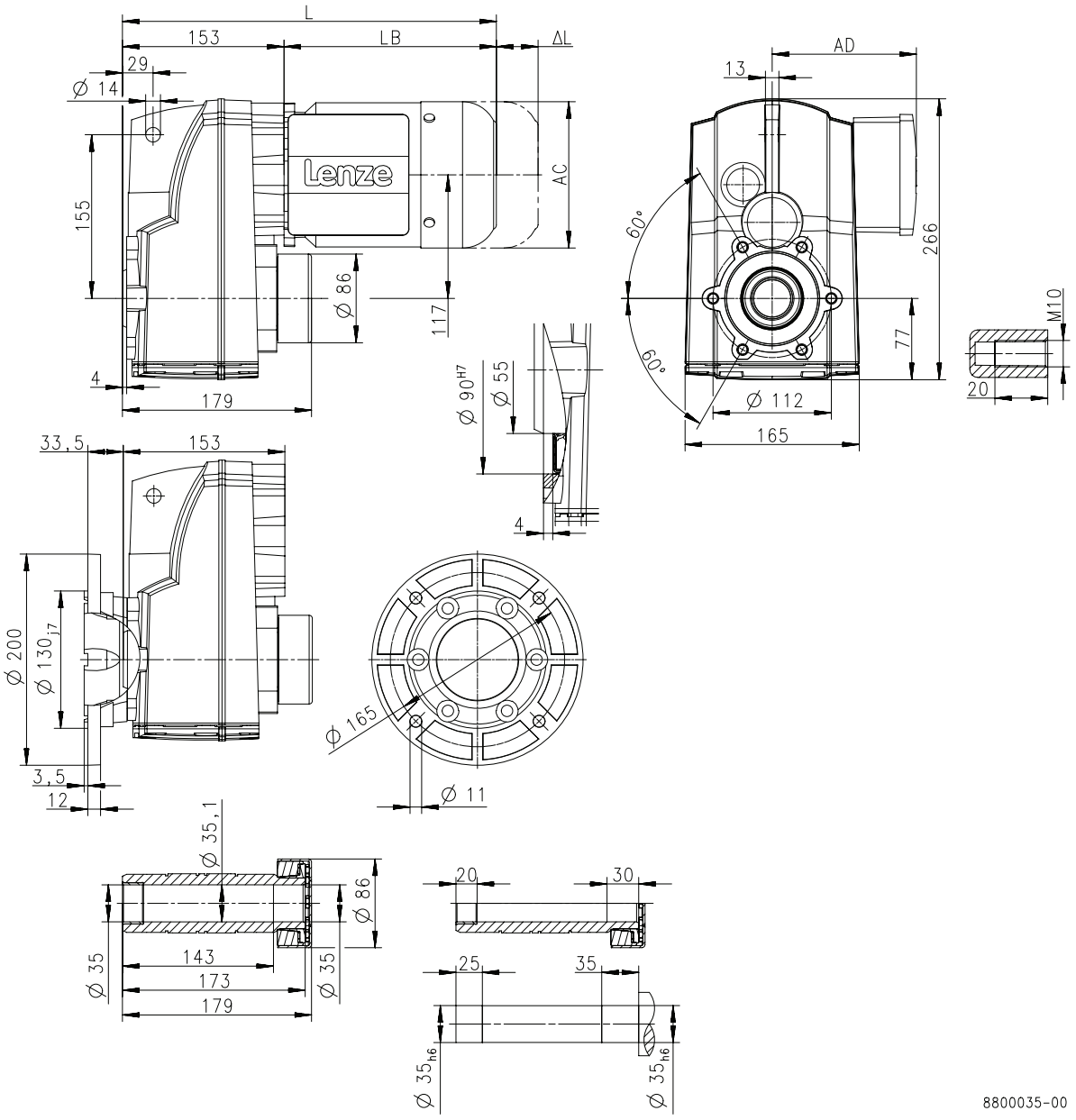

Product			MF□MA□□								
			063-32	063-42	071-32	071-42	080-32	080-42	090-32	100-12	100-32
Dimensions											
Total length	**L**	**[mm]**	336		356		379		427	474	
Motor length	**LB**	**[mm]**	183		203		226		274	321	
Length of motor options	**Δ L**	**[mm]**	170		165		183		181	170	
Motor diameter	**AC**	**[mm]**	123		139		156		176	194	
Distance motor/connection	**AD**	**[mm]**	100		109		150		157	166	



Dimensions, 4-pole motors

g500-S660

Dimensions with hollow shaft

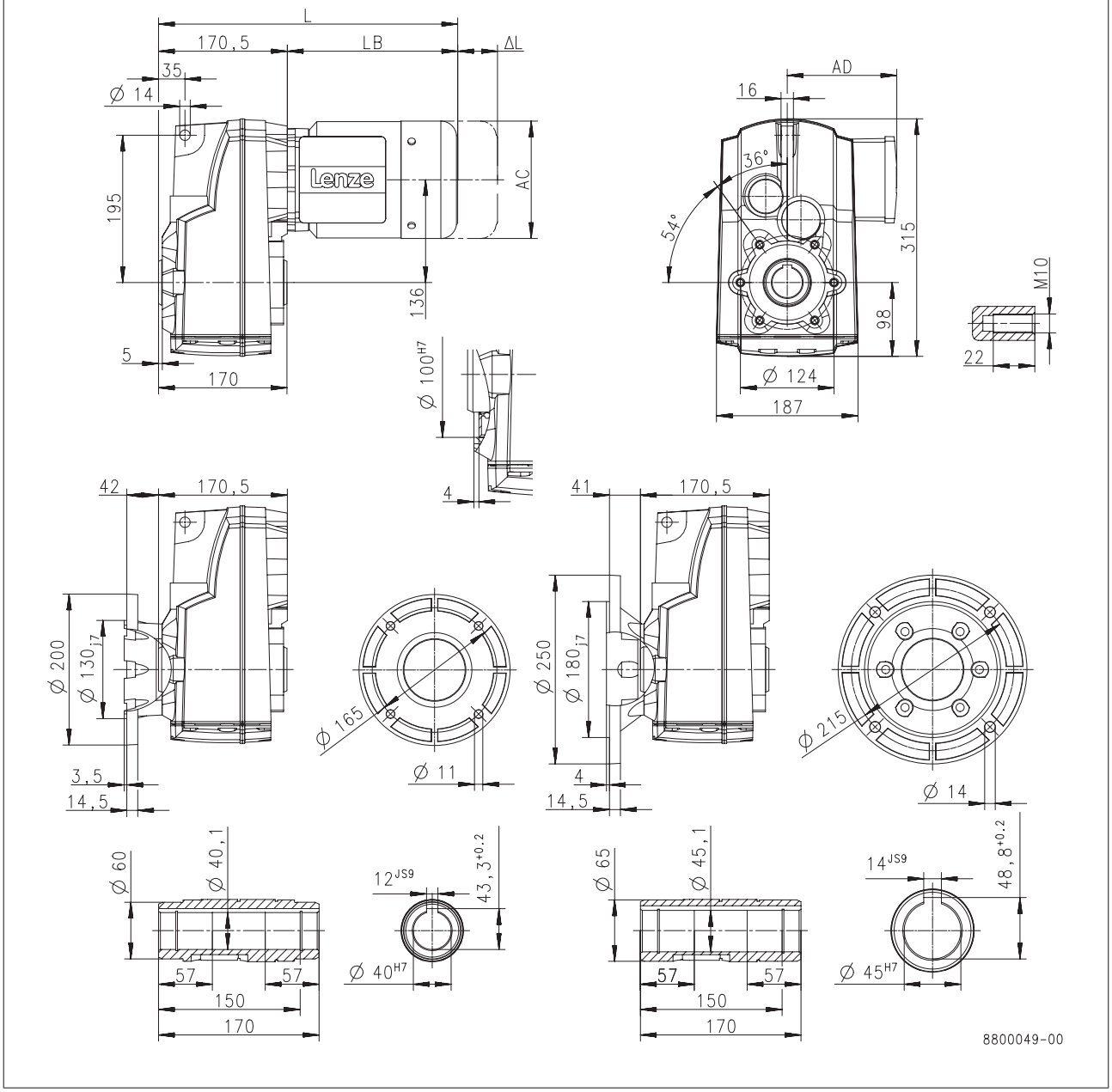

Product			MF□MA□□								
			063-32	063-42	071-32	071-42	080-32	080-42	090-32	100-12	100-32
Dimensions											
Total length	**L**	**[mm]**	354		374		397		445	492	
Motor length	**LB**	**[mm]**	183		203		226		274	321	
Length of motor options	**Δ L**	**[mm]**	170		165		183		181	170	
Motor diameter	**AC**	**[mm]**	123		139		156		176	194	
Distance motor/connection	**AD**	**[mm]**	100		109		150		157	166	



Dimensions, 4-pole motors

g500-S660

Dimensions with solid shaft

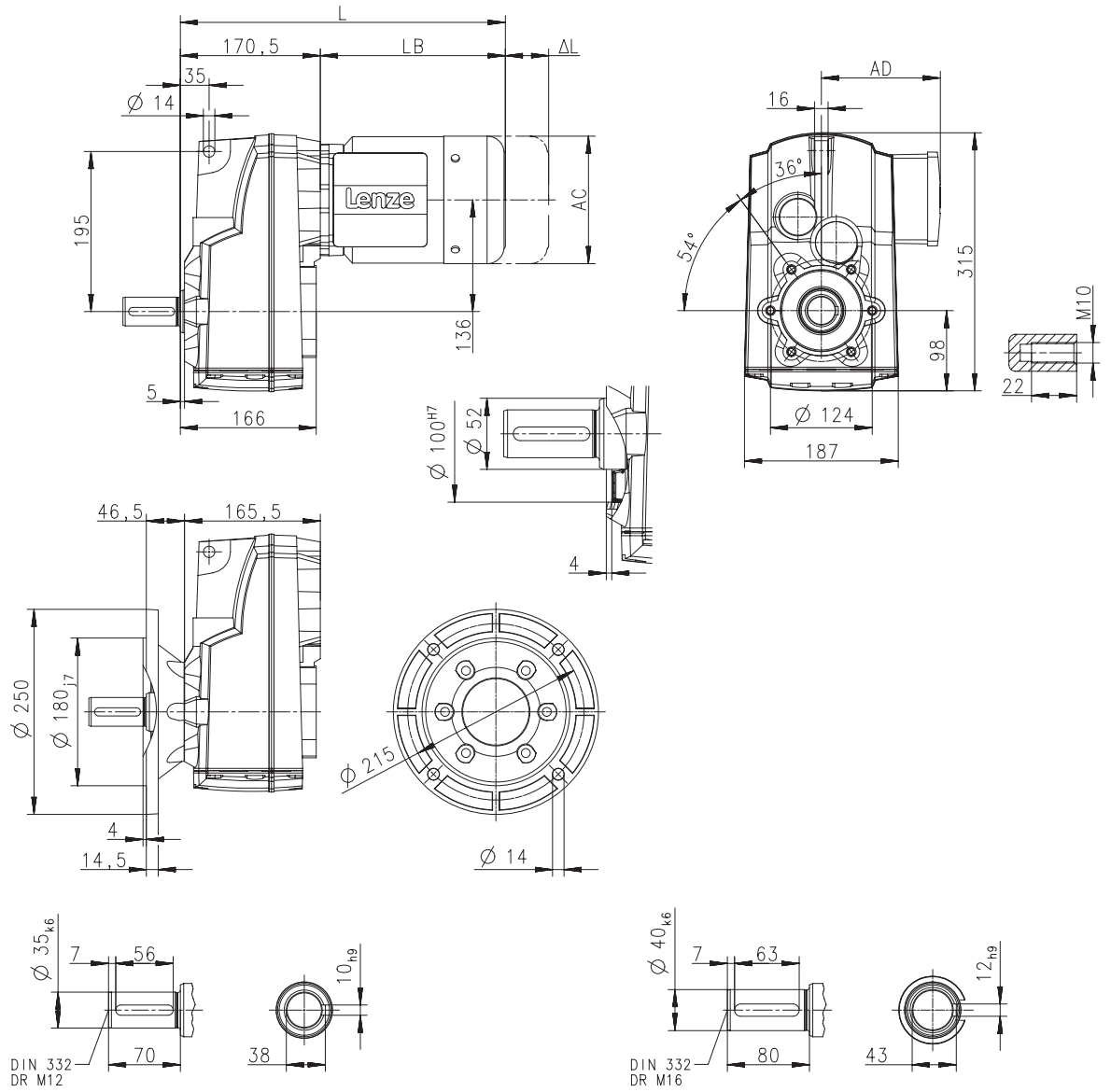

Product			MF□MA□□								
			063-32	063-42	071-32	071-42	080-32	080-42	090-32	100-12	100-32
Dimensions											
Total length	**L**	**[mm]**	354		374		397		445	492	
Motor length	**LB**	**[mm]**	183		203		226		274	321	
Length of motor options	**Δ L**	**[mm]**	170		165		183		181	170	
Motor diameter	**AC**	**[mm]**	123		139		156		176	194	
Distance motor/connection	**AD**	**[mm]**	100		109		150		157	166	



Dimensions, 4-pole motors

g500-S660

Dimensions with solid shaft and foot

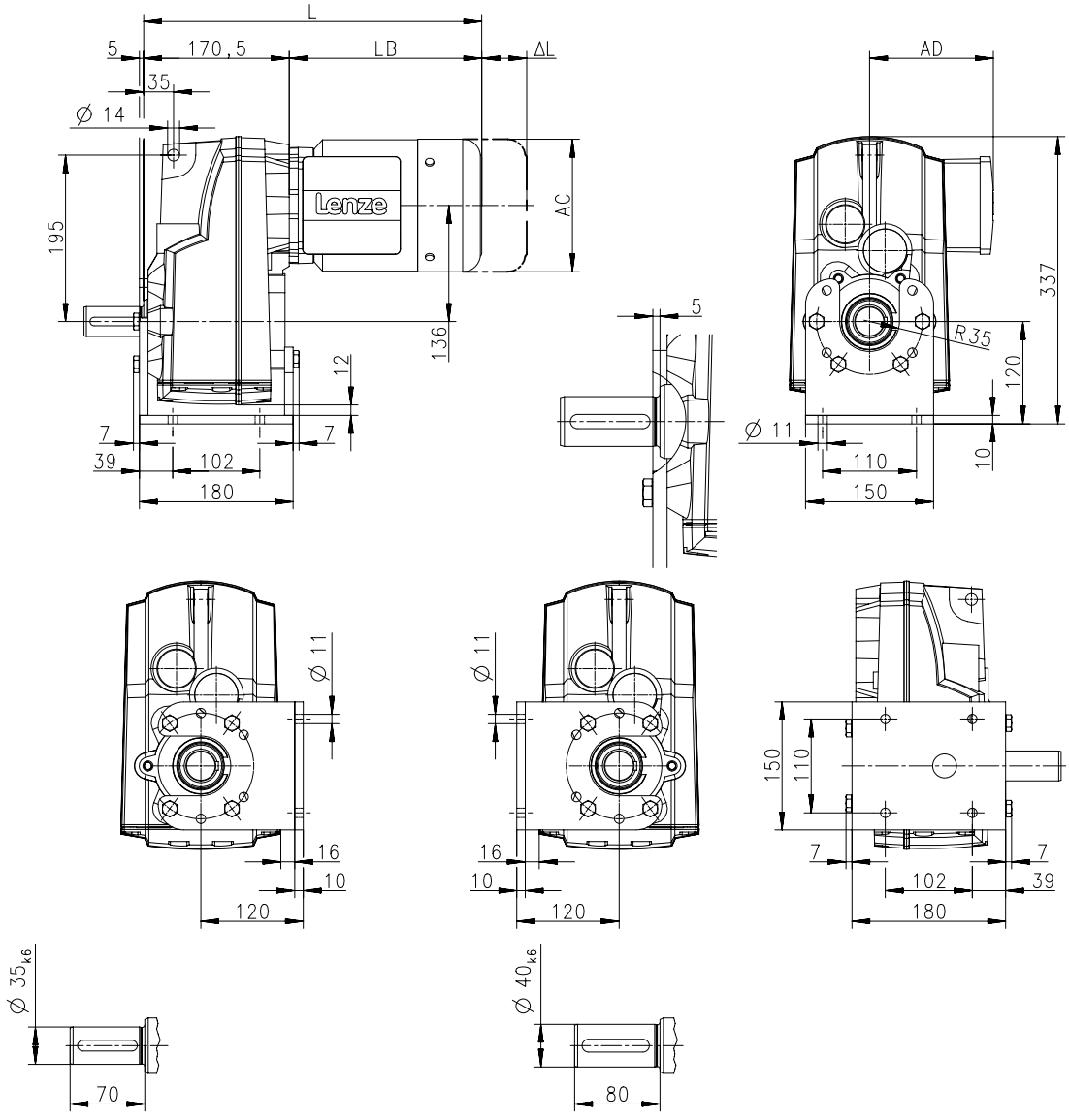

8800052-00

Product			MF□MA□□								
			063-32	063-42	071-32	071-42	080-32	080-42	090-32	100-12	100-32
Dimensions											
Total length	**L**	**[mm]**	354		374		397		445	492	
Motor length	**LB**	**[mm]**	183		203		226		274	321	
Length of motor options	**Δ L**	**[mm]**	170		165		183		181	170	
Motor diameter	**AC**	**[mm]**	123		139		156		176	194	
Distance motor/connection	**AD**	**[mm]**	100		109		150		157	166	



Dimensions, 4-pole motors

g500-S660

Dimensions with shrink disc

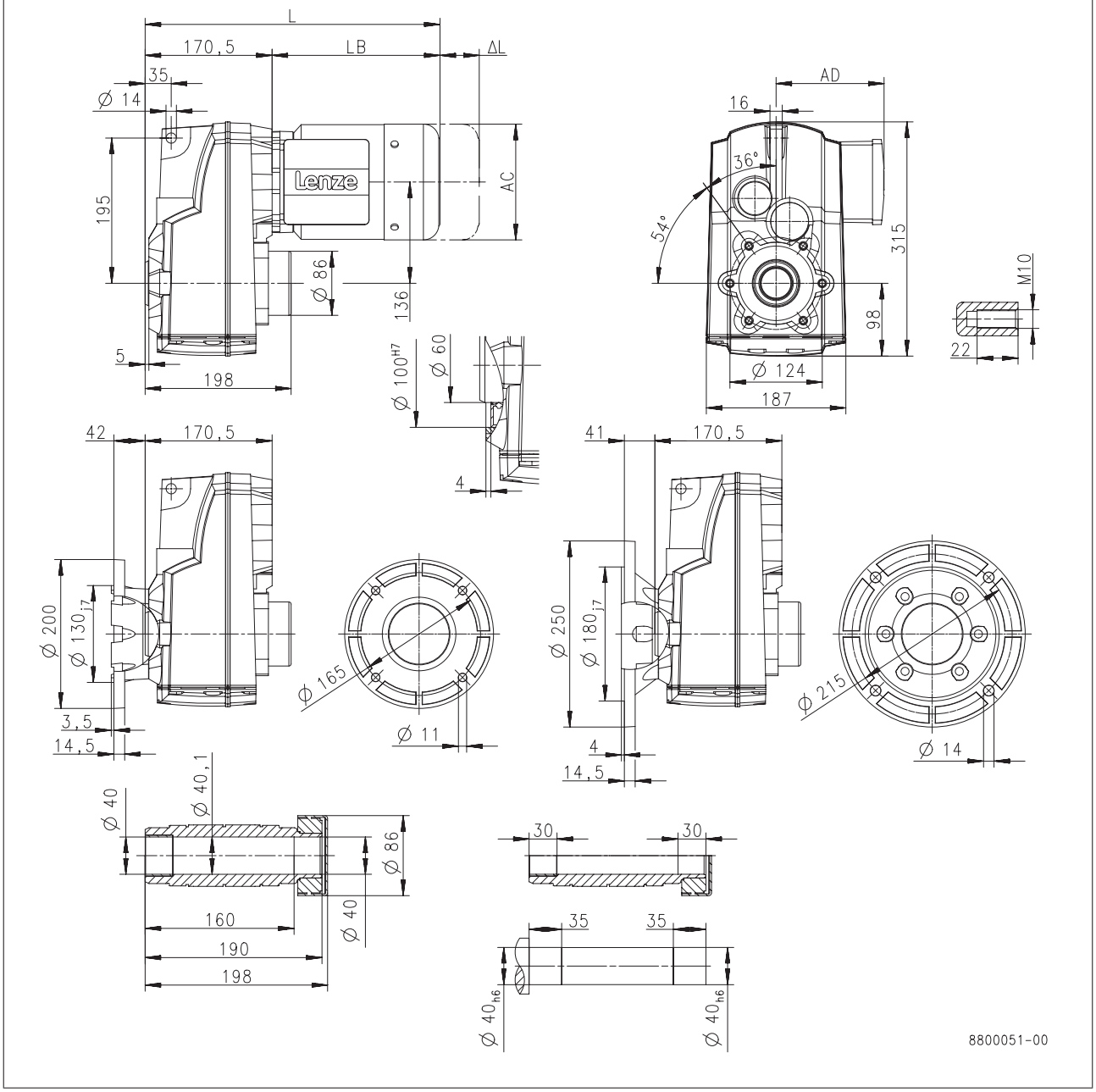

Product			MF□MA□□								
			063-32	063-42	071-32	071-42	080-32	080-42	090-32	100-12	100-32
Dimensions											
Total length	**L**	**[mm]**	354		374		397		445	492	
Motor length	**LB**	**[mm]**	183		203		226		274	321	
Length of motor options	**Δ L**	**[mm]**	170		165		183		181	170	
Motor diameter	**AC**	**[mm]**	123		139		156		176	194	
Distance motor/connection	**AD**	**[mm]**	100		109		150		157	166	



Weights, 4-pole motors

2-stage gearboxes

				MF□MA□□					
				063-32	063-42	071-32 071-42	080-32 080-42	090-32	100-12 100-32
g500	-S130	m	[kg]	9.5		12	16		
	-S220	m	[kg]	11		13	17		
	-S400	m	[kg]	14		16	20	27	36
	-S660	m	[kg]		18	20	25	32	40

3-stage gearboxes

				MF□MA□□		
				063-32 063-42	071-32 071-42	080-32 080-42
g500	-S220	m	[kg]	11		
	-S400	m	[kg]	14	16	
	-S660	m	[kg]	19	21	25



Surface and corrosion protection

For optimum protection of geared motors against ambient conditions, the surface and corrosion protection system (OKS) offers tailor-made solutions.

Various surface coatings combined with other protective measures ensure that the geared motors operate reliably even at high air humidity, in outdoor installations or in the presence of atmospheric impurities. Any colour from the RAL Classic collection can be chosen for the top coat. The geared motors are also available unpainted (no surface and corrosion protection).

Surface and corrosion protection	Applications	Measures
OKS-G (primed)	• Dependent on subsequent top coat applied	• 2K PUR priming coat (grey) • Zinc-coated screws • Rust-free breather elements Optional measures • Stainless steel nameplate
OKS-S (small)	• Standard applications • Internal installation in heated buildings • Air humidity up to 90%	• Surface coating as per corrosivity category C1 (in line with EN 12944-2) • Zinc-coated screws • Rust-free breather elements Optional measures • Stainless steel nameplate
OKS-M (medium)	• Internal installation in non-heated buildings • Covered, protected external installation • Air humidity up to 95%	• Surface coating as per corrosivity category C2 (in line with EN 12944-2) • Zinc-coated screws • Rust-free breather elements Optional measures • Stainless steel shaft • Stainless steel nameplate • Rust-free shrink disc (on request)
OKS-L (large)	• External installation • Air humidity above 95% • Chemical industry plants • Food industry	• Surface coating as per corrosivity category C3 (in line with EN 12944-2) • Blower cover and B end shield additionally primed • Cable glands with gaskets • Corrosion-resistant brake with cover ring, stainless friction plate, and chrome-plated armature plate (on request) • All screws/screw plugs zinc-coated • Stainless breather elements • Threaded holes that are not used are closed by means of plastic plugs Optional measures • Sealed recesses on motor (on request) • Stainless steel shaft • Stainless steel nameplate • Rust-free shrink disc (on request) • Additional priming coat on cast iron fan • Oil expansion tank and torque plates painted separately and supplied loose



Surface and corrosion protection

Structure of surface coating

Surface and corrosion protection	Corrosivity category	Surface coating	Colour
	DIN EN ISO 12944-2	Structure	
Without OKS(uncoated)		Dipping primed gearbox	
OKS-G (primed)		Dipping primed gearbox 2K PUR priming coat	
OKS-S (small)	C1	Dipping primed gearbox 2K-PUR top coat	Standard: RAL 7012 Optional: RAL Classic
OKS-M (medium)	C2	Dipping primed gearbox 2K PUR priming coat 2K-PUR top coat	
OKS-L (large)	C3		





g500-S shaft-mounted helical gearbox

130 to 660 Nm

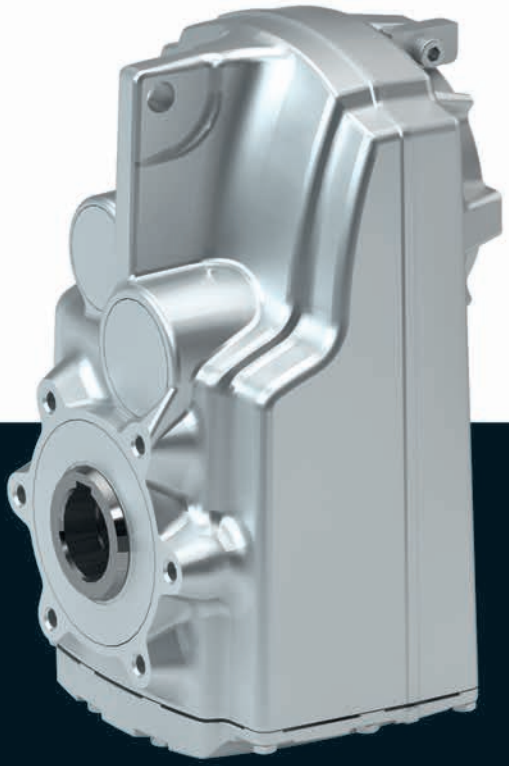

g500-S shaft-mounted helical gearbox

Contents



General information	List of abbreviations	6.5 - 5
	Product information	6.5 - 6
	Equipment	6.5 - 7
	The gearbox kit	6.5 - 8
	Functions and features	6.5 - 10
	Lubricants	6.5 - 11
	Ventilation	6.5 - 12
Technical data	Permissible radial and axial forces at output	6.5 - 15
	Moments of inertia	6.5 - 17
	Additional weights for gearboxes	6.5 - 19
Accessories	Torque plate	6.5 - 21
	Shaft cover	6.5 - 22





List of abbreviations

$F_{ax,max}$	[N]	Max. axial force
$F_{rad,max}$	[N]	Max. radial force
i		Ratio
J	[kgcm²]	Moment of inertia
m	[kg]	Mass

g500-S shaft-mounted helical gearbox

General information



Product information

The slim shaft-mounted helical gearboxes feature high reliable radial forces, closely stepped gear reductions and a low backlash. They are available in 2-pole and 3-pole design with a torque up to 660 Nm and a ratio of up to i= 495.

Versions

- Slimline design saves installation space of the machine
- Solid shaft, hollow shaft and shrink disc for direct integration into the machine
- High accuracy with axial output provide for the highest efficiency

The product name

Gearbox type	Product range		Design	Rated torque [Nm]	Product
Shaft-mounted helical gearbox	g500	-	S	130	g500-S130
				220	g500-S220
				400	g500-S400
				660	g500-S660



Equipment

Overview

The equipment includes all the options available as standard and all the built-on accessories of the product.

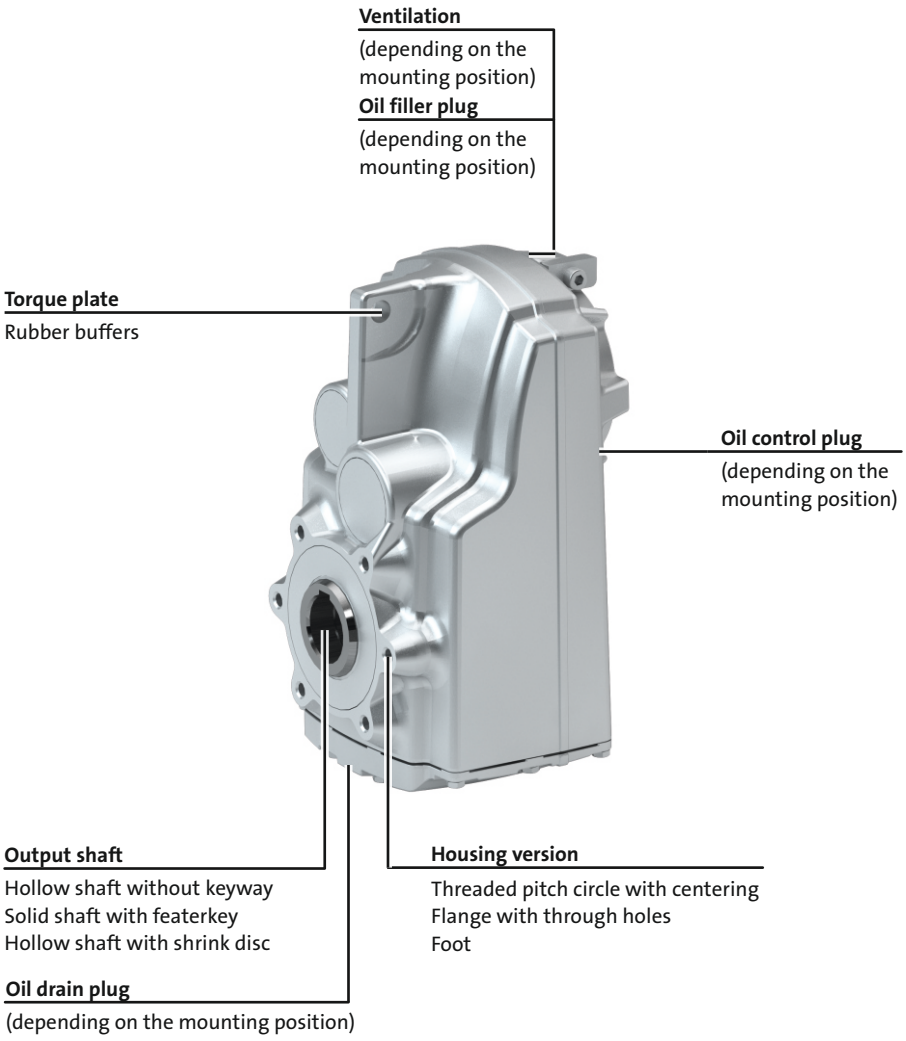



The gearbox kit

Gearbox details

Product	g500-S130	g500-S220	g500-S400	g500-S660
Driven shaft				
Solid shaft with featherkey [mm]	25x50		30x60	35x70 40x80
Hollow shaft with keyway [mm]	25	25/30	30/35	40/45
Hollow shaft with shrink disc [mm]	25	25/30	35	40
Design	Standard stainless steel			
Gasket	Standard FPM (Viton)			
Bearing	Standard			
Fitting grease	Not enclosed Enclosed			
Housing				
Housing version	With foot without centring With centering			
Output flange				
flange diameter [mm]	160		200	200/250 [1]
Lubricant				
Type	CLP 460 [2] CLP HC 320 CLP HC 220 CLP HC 220 USDA H1			
Oil-level inspection	Without inspection With inspection			
Breather element	Without		Standard mounting position: Mounted Combined mounting position: loosely enclosed	
Backlash				
Backlash	Standard			
Accessories				
Torque plate	Rubber buffers			
Shaft cover	Shrink disc: Rotating cover Shrink disc: Fixed cover			

[1] 200 mm flange diameter only possible on hollow shaft version.
[2] Not suitable for geared servo motors.

6.5

► Further information and installation feasibilities can be found in the Gearboxes chapter.



The gearbox kit

Gearbox details

Solid shaft

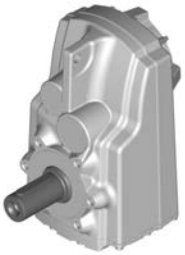

without centring

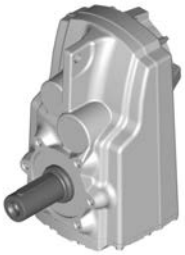

With centering



Flange with through holes

Hollow shaft



without centring



With centering



Flange with through holes

Hollow shaft with shrink disc



without centring



With centering



Flange with through holes

Accessories



Foot mounting



With rubber buffer

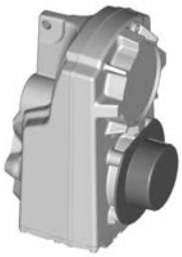

Shrink disc cover

6.5



Functions and features

Product	g500-S130	g500-S220	g500-S400	g500-S660
Housing				
Design	Cuboid			
Material	Aluminium			
Solid shaft				
Design	with keyway to DIN 6885			
Tolerance	Shaft diameter ≤ 50 mm: k6 Shaft diameter > 50 mm: m6			
Material	Tempered steel C45 Nirosta X46Cr13			
Hollow shaft				
Design	With keyway Without keyway (for shrink disc)			
Tolerance	Bore H7			
Material	Tempered steel C45 Nirosta X46Cr13			
Toothed parts				
Design	Ground tooth flanks Optimised tooth flank geometry			
Material	Case-hardened steel			
Shaft-hub joint				
	1st and 2nd step: Force-fit 3rd step: positive-fit			
Shaft sealing rings				
Design	With dust lip			
Material	NB / FP			
Bearing				
Design	Ball bearing / tapered-roller bearing depending on size and design			
Lubricants				
	Standard: mineral oil Optional: synthetic oil [1]			
Quantities	Corresponding to mounting position (see nameplate)			
Mechanical efficiency				
2-stage gearboxes [$\eta_{c=1}$]	0.96			
3-stage gearboxes [$\eta_{c=1}$]		0.95		

[1] Standard for geared servo motors.

Direction of rotation

6.5

2-stage gearboxes	3-stage gearboxes
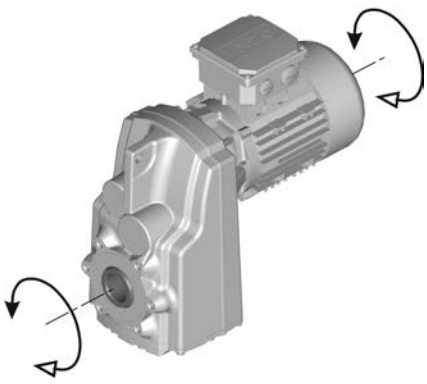	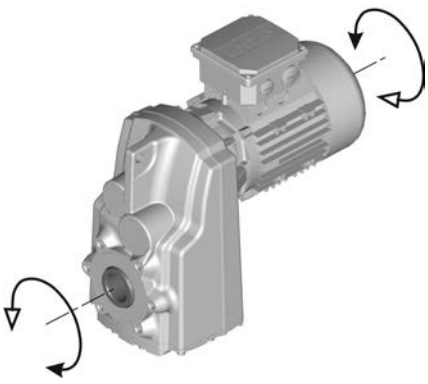



Lubricants

Lenze gearboxes and geared motors are ready for operation on delivery and are filled with lubricants specific to both the drive and the design. The mounting position and design specified in the order are key factors in choosing the volume of lubricant.

The lubricants listed in the lubricant table are approved for use in Lenze drives.

Lubricant table

Mode	CLP 460	CLP HC 320	CLP HC 220 USDA H1
Ambient temperature [°C]	0 ... +40	-25 ... +50	-20 ... +40
Specification	Mineral based oil with additives	Synthetic-based oil (synthetic hydrocarbon / poly-alpha-olefin oil)	
Changing interval	16000 operating hours not later than after three years (oil temperature 70 to 80 °C)	25000 operating hours not later than after three years (oil temperature 70 to 80 °C)	16000 operating hours not later than after three years (oil temperature 70 to 80 °C)
Fuchs	Fuchs Renolin CLP 460	Fuchs Renolin Unisyn CLP 320	bremer & leguil Cassida Fluid GL 220
Klüber	Klüberoil GEM1-460 N	Klübersynth GEM4-320 N	Klüberoil 4 UH1-220 N
Shell	Shell Omala S2 G 460	Shell Omala S4 GX HD 320	

► Please contact your Lenze sales office if you are operating at ambient temperatures in areas up to< -20 °C bzw. > or up to +40°C.

Shaft sealing rings

By default, the gearboxes come with NBR shaft sealing rings at the output end. At high speed and unfavourable ambient conditions as high temperature, reduced circulation of air etc., Lenze recommends the use of Viton shaft sealing rings.

Please consider this in your order.



Ventilation

Non-ventilated gearboxes

No ventilation is required for gearboxes g500-S130 to S220.

Ventilated gearboxes

The g500-S400 S660 gearbox is supplied with a breather element as standard.

Gearboxes in combined mounting position

To reduce the number of different versions, the gearboxes can also be ordered with combined mounting positions.
Depending on the gearbox in question, the following combinations are available:
g500-S130 to S660 in combined mounting position AEF
The breather elements are supplied loose.



Ventilation

Position of ventilation, sealing elements and oil level check

► **A ... F** mounting position

A	B
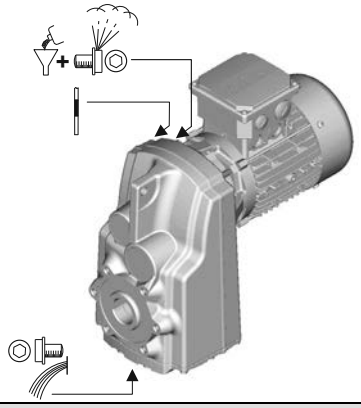	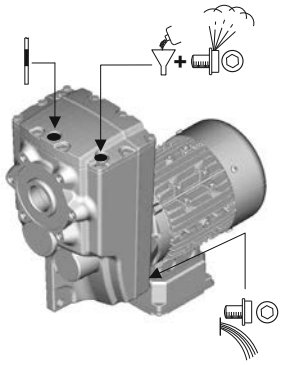
C	**D**
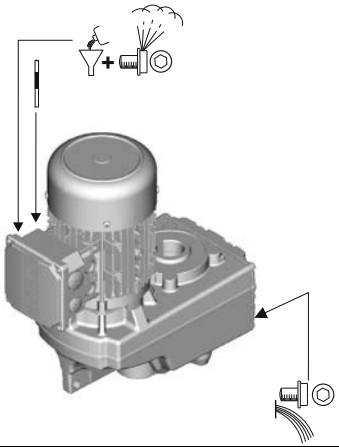	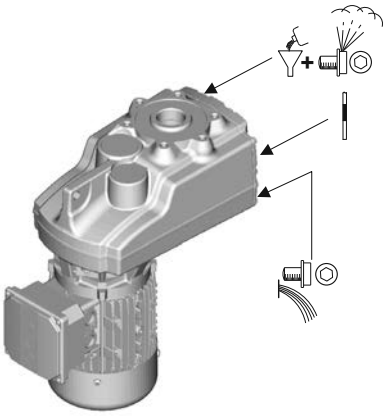
E	**F**
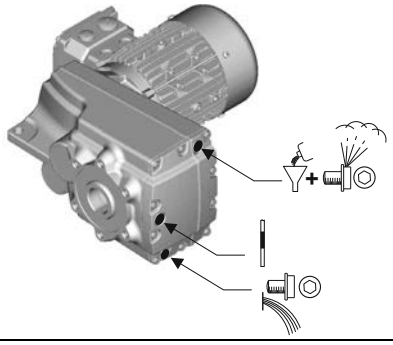	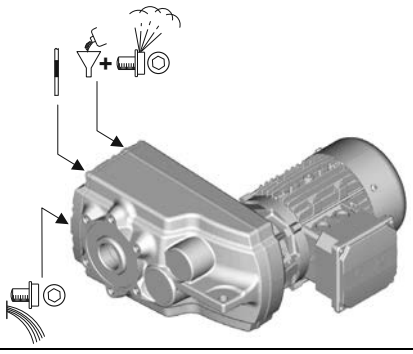

	Filling		Drain
	Ventilation		Check





Permissible radial and axial forces at output

Permissible radial force

$F_{rad,perm} = f_w \times F_{rad,max}$

► If F_{rad} **and** $F_{ax} \neq 0$, please contact Lenze.

Permissible axial force

If there is no radial force, the maximum permissible axial force is 50 % of the table value $F_{rad,max}$

Application of forces

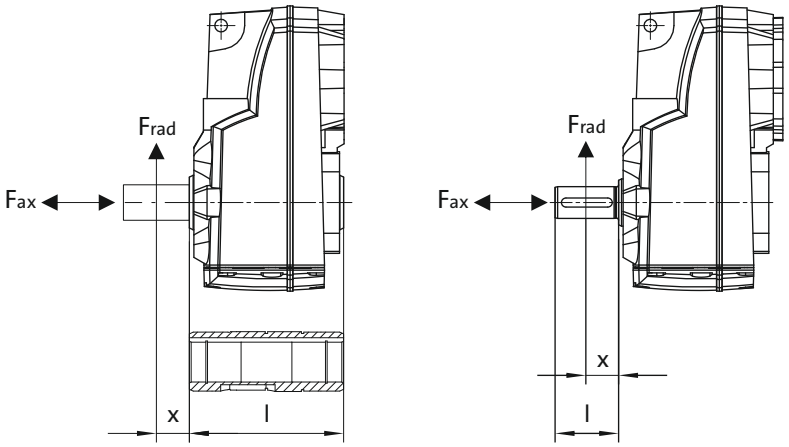

Additional load factor f_w at output shaft

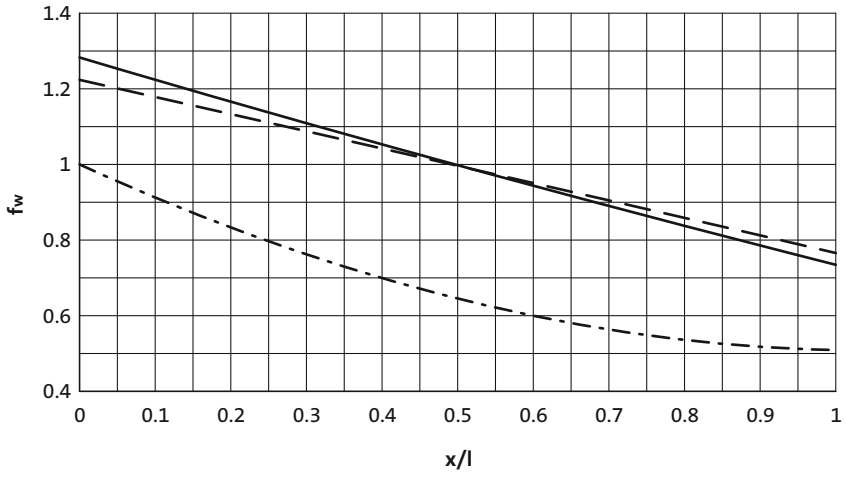

——— Solid shaft
— — — Solid shaft with flange
— · — Hollow shaft



Permissible radial and axial forces at output

The values given in the table refer to the center shaft end force application point and are minimum values calculated according to the most unfavourable conditions (force application angle, mounting position, direction of rotation). The values were calculated for the motor/gearbox combination with a load capacity of c= 1.3 and an input speed of 1400 rpm.

- If the torque is transmitted via the flange face, max 50 % of the radial force $F_{rad,max}$ are permissible.
- Neither radial nor axial forces are permissible for the hollow shaft with shrink disc.

In case of different operating conditions, considerably higher forces can be transmitted. Please contact Lenze.

Product	n_2 [r/min]									
	1000	630	400	250	160	100	63	40	25	≤16
	Max. radial force, Hollow shaft									
	$F_{rad,max}$	$F_{rad,max}$	$F_{rad,max}$	$F_{rad,max}$	$F_{rad,max}$	$F_{rad,max}$	$F_{rad,max}$	$F_{rad,max}$	$F_{rad,max}$	$F_{rad,max}$
	[N]	[N]	[N]	[N]	[N]	[N]	[N]	[N]	[N]	[N]
g500-S130	1000	1150	1350	1500	1650	2200	2750	3450	4200	4500
g500-S220	2100	2700	2800	3200	3800	4600	5500	6300	7000	7000
g500-S400	1800	2400	3000	3400	4100	5000	6000	7100	8000	8000
g500-S660	2400	3300	4300	4700	5000	6600	8500	10800	12000	12000
	Max. radial force, Solid shaft without flange									
	$F_{rad,max}$	$F_{rad,max}$	$F_{rad,max}$	$F_{rad,max}$	$F_{rad,max}$	$F_{rad,max}$	$F_{rad,max}$	$F_{rad,max}$	$F_{rad,max}$	$F_{rad,max}$
	[N]	[N]	[N]	[N]	[N]	[N]	[N]	[N]	[N]	[N]
g500-S130	1000	1150	1350	1500	1650	2200	2750	3450	4200	4500
g500-S220	1650	2100	2300	2700	3200	3600	3600	3600	3600	3600
g500-S400	1400	1900	2400	2700	3200	4000	4800	5800	6200	6200
g500-S660	1850	2500	3200	3600	3900	5100	6500	8400	9000	9000
	Max. radial force, Solid shaft with flange									
	$F_{rad,max}$	$F_{rad,max}$	$F_{rad,max}$	$F_{rad,max}$	$F_{rad,max}$	$F_{rad,max}$	$F_{rad,max}$	$F_{rad,max}$	$F_{rad,max}$	$F_{rad,max}$
	[N]	[N]	[N]	[N]	[N]	[N]	[N]	[N]	[N]	[N]
g500-S130	1000	1150	1350	1500	1650	2200	2750	3450	4200	4500
g500-S220	2300	2800	3200	3700	4400	4600	4600	4600	4600	4600
g500-S400	2900	3700	4300	5100	5900	6800	7000	7000	7000	7000
g500-S660	4000	5000	6100	7000	7800	9600	10000	10000	10000	10000



Moments of inertia

- The moments of inertia relate to the drive shaft of the gearbox.
- The total moment of inertia is calculated by adding the values of the gearbox, motor and accessories.

2-stage gearboxes

Product	Ratio	Moment of inertia
	i	J
		[kgcm²]
g500-S130	3.661	1.56
	5.021	0.89
	6.425	0.57
	7.029	0.49
	8.322	0.69
	9.411	1.03
	11.413	0.42
	12.907	0.60
	14.606	0.29
	15.979	0.25
	18.069	0.34
	20.381	0.17
	23.048	0.23
	24.967	0.13
	28.233	0.17
	31.387	0.087
	35.493	0.11
	40.422	0.059
	45.711	0.074
	51.230	0.039
	57.933	0.048
	64.200	0.027
	72.600	0.032
	84.581	0.016
	95.648	0.019
g500-S220	3.840	2.60
	5.267	1.54
	6.767	1.64
	7.667	1.50
	9.280	1.04
	10.514	0.96
	11.876	0.72
	12.992	0.62
	13.456	0.67
	14.720	0.58
	16.571	0.44
	18.776	0.42
	20.300	0.34
	23.000	0.32
	26.422	0.21
	29.937	0.20
	32.867	0.15
	37.238	0.14
	42.533	0.095
	48.190	0.091
	51.620	0.069
	58.486	0.067
	65.975	0.044
	74.750	0.043

Product	Ratio	Moment of inertia
	i	J
		[kgcm²]
g500-S400	3.339	5.16
	4.579	2.91
	5.860	1.86
	6.411	1.58
	7.467	2.18
	8.436	1.95
	10.240	1.32
	11.569	1.20
	13.105	0.89
	14.336	0.77
	14.806	0.82
	16.197	0.70
	18.286	0.53
	20.659	0.49
	22.400	0.40
	25.308	0.37
	29.156	0.24
	32.940	0.23
	36.267	0.17
	40.974	0.16
	46.933	0.11
	53.026	0.10
	56.960	0.079
	64.354	0.074
g500-S660	3.920	8.80
	5.376	5.26
	6.417	5.48
	6.880	3.48
	7.311	4.90
	8.800	3.50
	10.027	3.19
	11.262	2.41
	12.320	2.12
	12.832	2.22
	14.037	1.96
	15.714	1.51
	17.905	1.42
	19.250	1.15
	21.933	1.09
	25.056	0.65
	28.548	0.61
	31.167	0.47
	35.511	0.44
	40.333	0.29
	45.956	0.28
	48.950	0.21
	55.773	0.20



Moments of inertia

3-stage gearboxes

Product	Ratio	Moment of inertia
	i	J
		[kgcm²]
g500-S220	40.012	0.20
	45.333	0.20
	52.587	0.13
	59.581	0.13
	67.298	0.092
	76.249	0.091
	86.079	0.062
	97.528	0.061
	111.747	0.044
	126.610	0.043
	143.205	0.030
	162.252	0.030
	241.022	0.014
	273.079	0.014
	312.233	0.003
	353.762	0.003
	398.508	0.006
	451.512	0.006
g500-S400	58.027	0.14
	65.559	0.14
	74.260	0.098
	83.900	0.095
	94.984	0.066
	107.314	0.064
	123.307	0.046
	139.313	0.045
	158.019	0.032
	178.531	0.031
	204.412	0.021
	230.946	0.021
	265.956	0.014
	300.479	0.014
	344.533	0.004
	389.256	0.004
	439.733	0.006
	496.814	0.006

Product	Ratio	Moment of inertia
	i	J
		[kgcm²]
g500-S660	49.867	0.39
	56.818	0.38
	63.817	0.27
	69.813	0.23
	72.713	0.26
	79.545	0.23
	89.048	0.17
	101.460	0.16
	109.083	0.13
	124.289	0.12
	137.133	0.083
	156.249	0.082
	176.611	0.056
	201.230	0.056
	223.833	0.037
	255.034	0.037
	280.500	0.026
	319.600	0.025
	369.548	0.016
	421.060	0.015



Additional weights for gearboxes

Product			g500-S130	g500-S220	g500-S400	g500-S660
Mass						
Solid shaft	m	[kg]	0.5	0.5	1.7	2.5
Shrink disc	m	[kg]	0.2	0.4	0.6	0.6
Foot	m	[kg]	1.7	1.8	3.3	4.3
Flange	m	[kg]	0.4	0.4	0.9	1.7





Torque plate

The torque is usually supported via the foot or the flange.
Another simple option is the integrated torque plate at the housing. Here, the torque is supported only via one point and is, among other things, suitable for shaft-mounted gearboxes. Moreover, the suitable rubber buffers provide for a low-tension installation and absorb slight shocks.

The rubber buffers can be ordered optionally.

Rubber buffer for torque plate

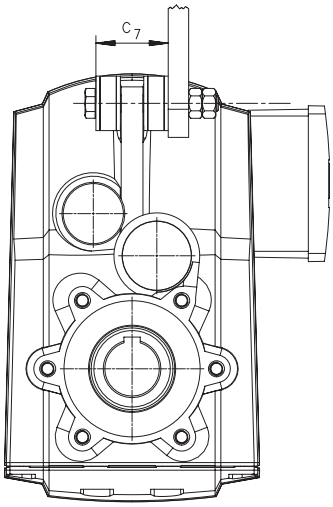

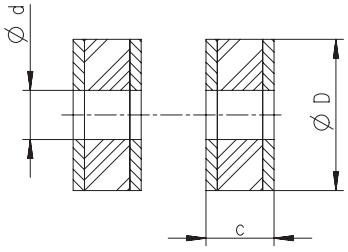

6.5

Product	Dimensions				Mass
	d	D	c	c_7	m
	[mm]	[mm]	[mm]	[mm]	[kg]
g500-S130	11.0	30.0	17.0	45.0	0.050
g500-S220	11.0	30.0	17.0	45.0	0.050
g500-S400	13.0	40.0	18.0	49.0	0.10
g500-S660	13.0	40.0	18.0	52.0	0.10



Shaft cover

Shrink disc cover

The cover is provided for the shrink disc to be protected from contact.

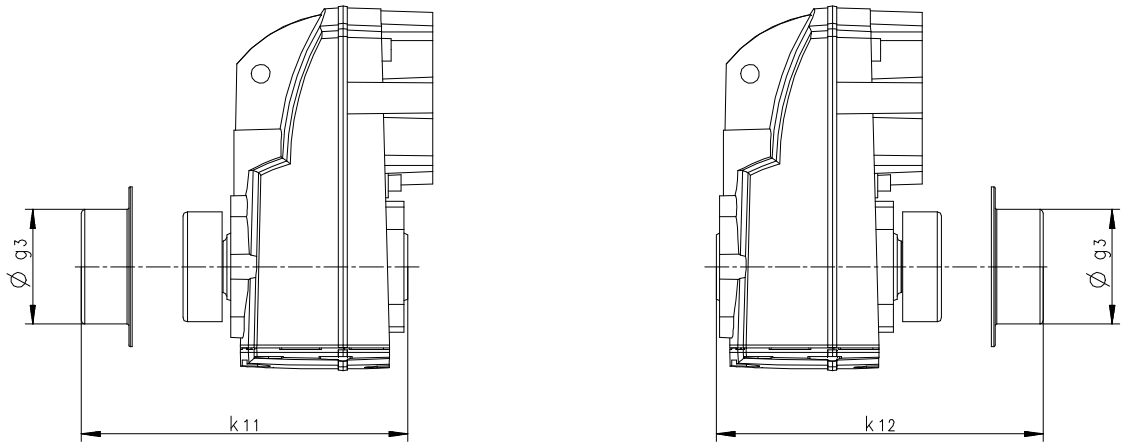

Product	Dimensions			Mass
	g_3	k_{11}	k_{12}	m
	[mm]	[mm]	[mm]	[kg]
g500-S130	63.0	132	132	0.050
g500-S220	76.0	152	152	0.050
g500-S400	90.0	182	182	0.050
g500-S660	90.0	200	202	0.050





g500-B bevel geared motors

0.55 to 4 kW (efficiency class better than IE2)

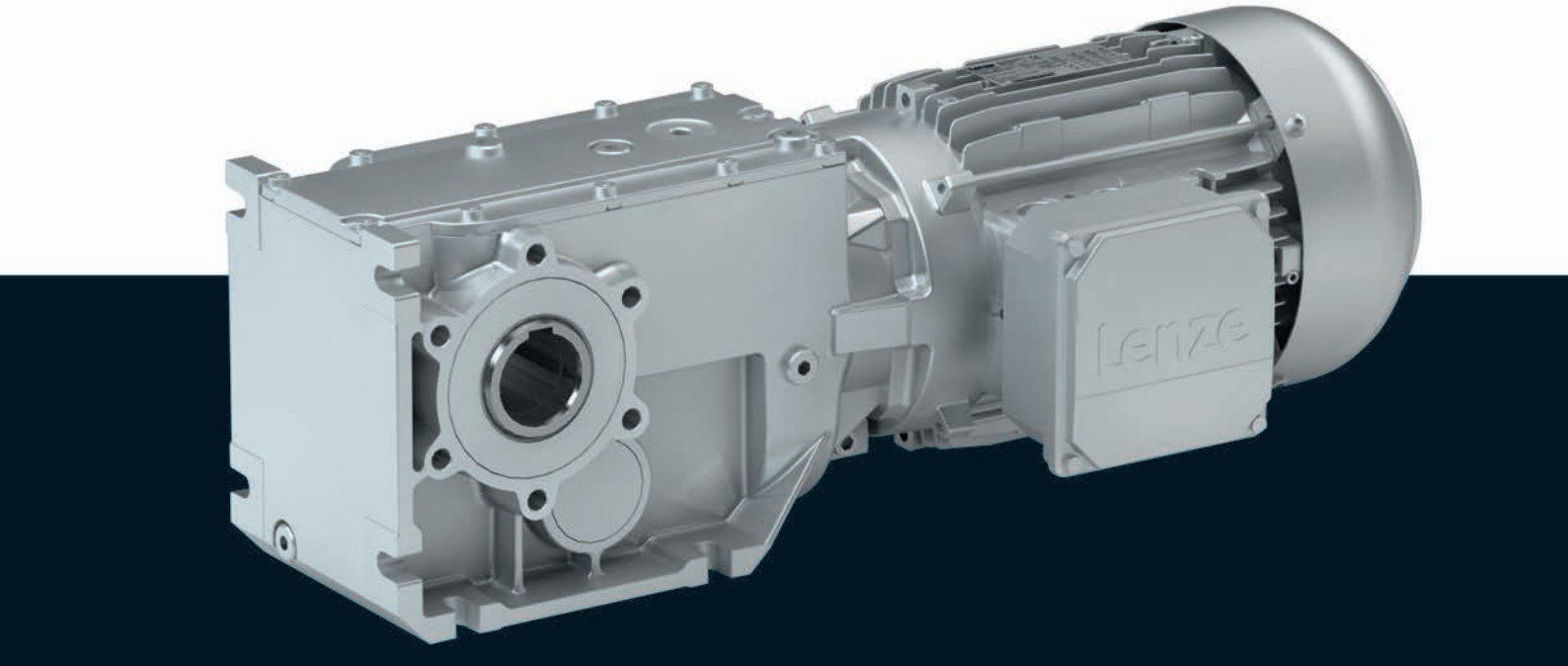

g500-B bevel geared motors

Contents



General information	List of abbreviations	6.7 - 5
	Product information	6.7 - 6
	Equipment	6.7 - 7
	The gearbox kit	6.7 - 8
	Dimensioning	6.7 - 14
Technical data	Selection tables, notes	6.7 - 19
	Selection tables, 4-pole motors	6.7 - 20
	Dimensions, notes	6.7 - 31
	Dimensions, 4-pole motors	6.7 - 32
	Weights, 4-pole motors	6.7 - 44
	Surface and corrosion protection	6.7 - 45

Contents





List of abbreviations

c		Load capacity
i		Ratio
m	[kg]	Mass
M_2	[Nm]	Output torque
M_{22}	[Nm]	Output torque
$M_{a_,1}$	[Nm]	Starting torque
$M_{a_,2}$	[Nm]	Starting torque
n_2	[r/min]	Output speed
n_{21}	[r/min]	Output speed
n_{22}	[r/min]	Output speed

CCC	China Compulsory Certificate
CE	Communauté Européenne
CSA	Canadian Standards Association
cURus	Combined certification marks of UL for the USA and Canada
DIN	Deutsches Institut für Normung e.V.
EMC	Electromagnetic compatibility
EN	European standard
GOST	Certificate for Russian Federation
IEC	International Electrotechnical Commission
IM	International Mounting Code
IP	International Protection Code
NEMA	National Electrical Manufacturers Association
UL	Underwriters Laboratory Listed Product
UR	Underwriters Laboratory Recognized Product
VDE	Verband deutscher Elektrotechniker (Association of German Electrical Engineers)



Product information

In combination with three-phase AC motors, our bevel gearboxes form a compact and powerful drive unit. Numerous options at the input and output end provide for the drive to be exactly adapted to your application.

The efficient bevel gearboxes feature high reliable radial forces, closely stepped gear reductions and a low backlash. They are available in 2-pole and 3-pole design with a torque up to 450 Nm and a ratio of up to i= 360.

Versions

- High-efficient right-angle gearbox in a compact design for space-saving installation
- Standardised shaft and flange dimensions for an easy machine integration
- Low backlash and high torsional stiffness provide for exact results in positioning applications
- With three-phase AC motors better than IE2 in the power range 0.55 ... 4 kW

Inverters for motor-proximity installation

The Drive Package with decentralised Inverter Drives 8400 motec covers a power range up to 4 kW.

The product name

Gearbox type	Product range		Design	Rated torque [Nm]	Product
Bevel gearbox	g500	-	B	45	g500-B45
				110	g500-B110
				240	g500-B240
				450	g500-B450



Equipment

Overview

The equipment includes all the options available as standard and all the built-on accessories of the product.

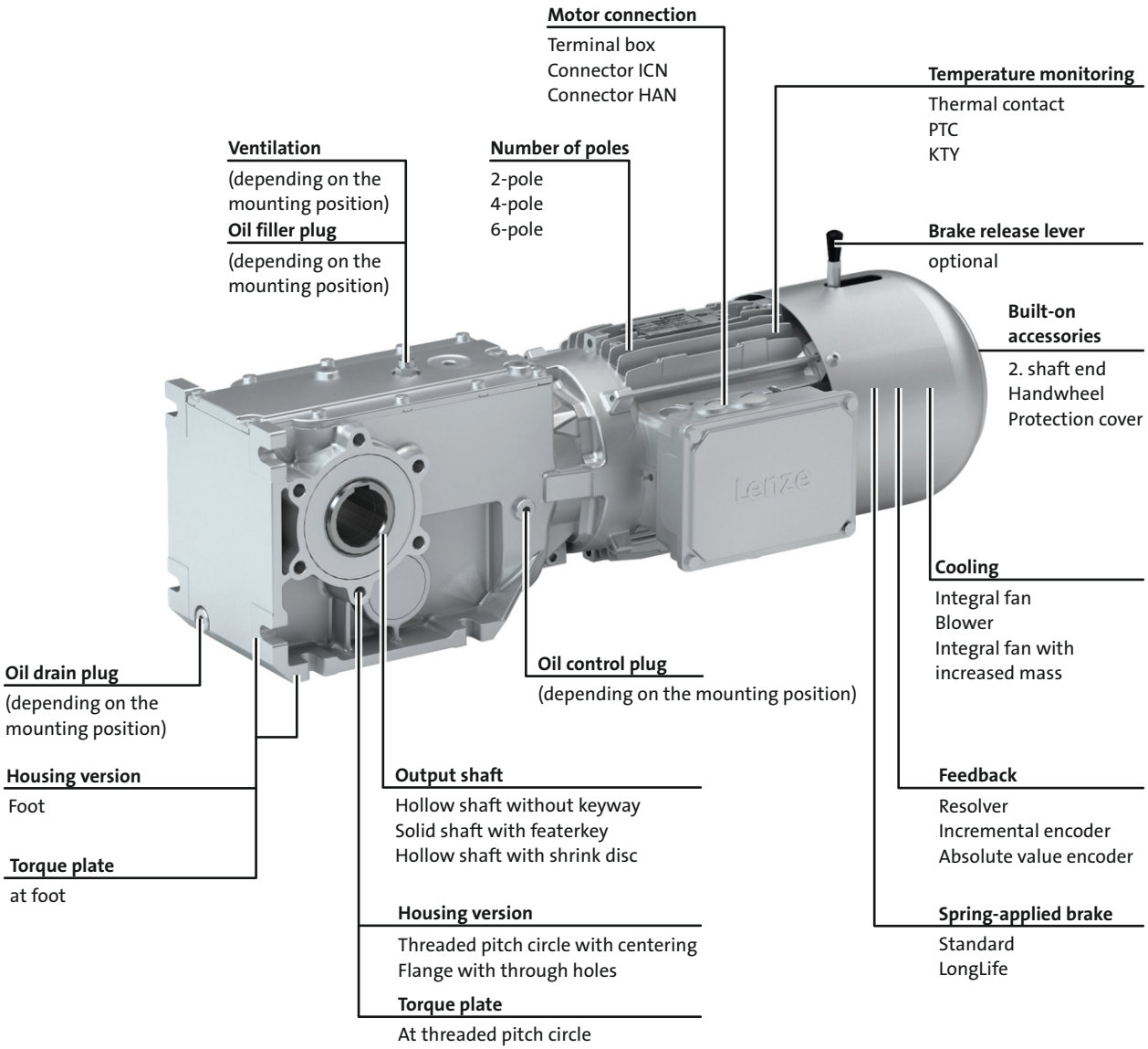



The gearbox kit

Geared motor

Product	g500-B45	g500-B110	g500-B240	g500-B450
Motor type				
Efficiency class better than IE2	MF□MA AC motors			
4-pole motor				
0.55 - 0.75 kW	063			
1.1 - 1.5 kW		071		
2.2 - 3.0 kW		080		
4.0 kW			090	
5.5 - 7.5 kW				100
Technical data				
Rated power	See selection table			
Mains voltage				
Mains frequency				
Output torque	See selection table			
Output speed	See selection table			
Ratio	See selection table			
Load capacity	See selection table			
Mounting position				
Standard	A/B/C/D/E/F			
Combined	ABCDEF	AEF		
Colour				
	Not coated Primed Paint in various corrosion-protection designs in accordance with RAL colours			
Surface and corrosion protection				
	Without OKS(uncoated) OKS-G (primed) OKS-S (small) OKS-M (medium) OKS-L (large)			



The gearbox kit

Mounting positions

► Mounting position (A to F) and position of system blocks (1 to 6)

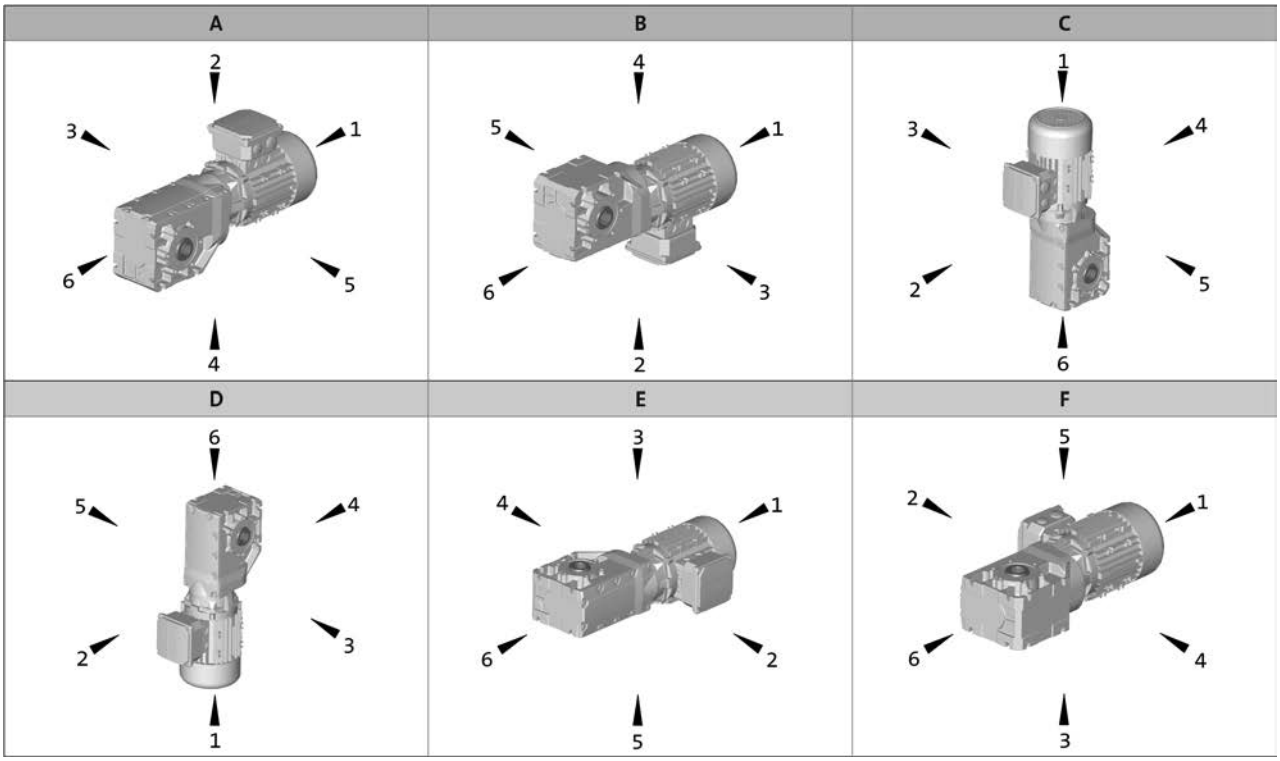

Hollow shaft: 0
Solid shaft: 3, 5, 8 (3+5)
Hollow shaft with shrink disc: 3, 5

Without flange: 0
Flange: 3, 5, 8 (3+5)
Terminal box / motec: 2, 3, 4, 5



The gearbox kit

Motor details

Product	MF□MA□□					
	063-32 063-42	071-32	071-42	080-32 080-42	090-32	100-12 100-32
Connection type	Terminal box ICN connector HAN-10E connector HAN-Modular connector					
Spring-applied brake						
Rated torque [Nm]	4		4 8	8 16		16 32
Brake voltage [V]	DC 24/180/205 AC 230/400/460					
Brake design	Standard LongLife					
	Standard Overexcited Cold Brake					
Options	Manual release lever Low noise With cover ring					
Feedback	With absolute value encoder With incremental encoder With resolver					
Cooling	Without blower/integral fan Blower Integral fan with increased mass					
Temperature monitoring	TKO thermal contact KTY83-110 thermal detector KTY84-130 thermal detector PTC thermistor					
Approval	cURus CCC					
Degree of protection	IP55					
Further options	Protection cover 2nd shaft end Handwheel					

► Further information and installation feasibilities can be found in the Motors chapter.



The gearbox kit

Motor details

Connection type



Terminal box



ICN connector



HAN connector

Cooling: integral fan



Without built-on accessories

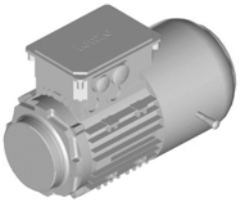

With spring-applied brake
With or without manual release lever

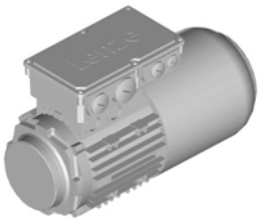

With feedback
With feedback and spring-applied brake

Cooling: blower

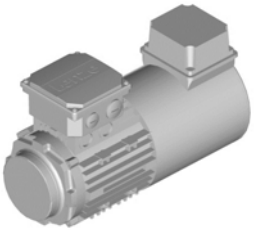

Without built-on accessories

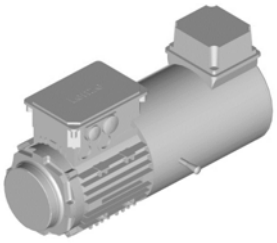

With spring-applied brake
With or without manual release lever

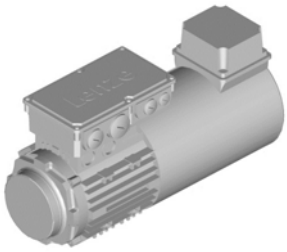

With feedback
With feedback and spring-applied brake

Further options



With 2nd shaft end
Only integral fan

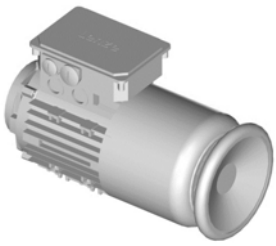

With handwheel
Only integral fan

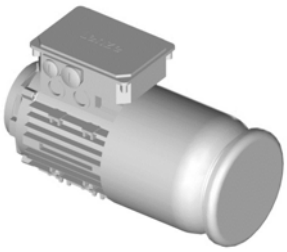

With protection cover



The gearbox kit

Gearbox details

Product	g500-B45	g500-B110	g500-B240	g500-B450
Driven shaft				
Solid shaft without keyway [mm]				
Solid shaft with featherkey [mm]	20x40		30x60	
Hollow shaft with keyway [mm]	18/20	20/25	30/35	35/40
Hollow shaft with shrink disc [mm]	20		30/35	35
Design	Standard stainless steel			
Gasket	Standard FPM (Viton)			
Bearing	Standard			
Fitting grease	Not enclosed Enclosed			
Housing				
Housing version	With foot With foot and centering			
Output flange				
flange diameter [mm]	110/120	120/160	160/200	200
Lubricant				
Type	CLP 460 [1)] CLP HC 320 CLP HC 220 CLP HC 220 USDA H1			
Oil-level inspection	Without inspection			Without inspection With inspection
Breather element	Without			Standard mounting position: Mounted Combined mounting position: loosely enclosed
Backlash				
Backlash	Standard			
Accessories				
Torque plate	Rubber buffers At threaded pitch circle	At threaded pitch circle	At threaded pitch circle At foot	At foot
Shaft cover	Hollow shaft Shrink disc: Rotating cover Shrink disc: Fixed cover			

[1)] Not suitable for geared servo motors.

► Further information and installation feasibilities can be found in the Gearboxes chapter.



The gearbox kit

Gearbox details

Solid shaft



Foot mounting
without centring



Foot mounting
With centering



Flange with through holes

Hollow shaft



Foot mounting
without centring



Foot mounting
With centering



Flange with through holes

Hollow shaft with shrink disc



Foot mounting
without centring



Foot mounting
With centering

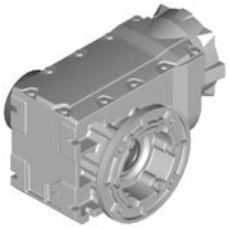

Flange with through holes

Accessories



2nd output shaft end



Torque plate
at foot



Torque plate
at threaded pitch circle

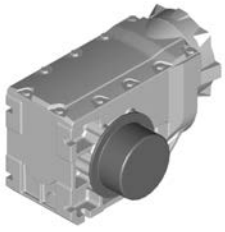

Cover
Hollow shaft/shrink disc



Dimensioning

General information about the data provided in this catalogue

The powers, torques and speeds specified in this catalogue are rounded values and are valid under the following conditions:

- Operating time/day = 8 h (100% OT)
- Duty class I for up to 10 switching operations/h
- Mounting positions and designs in this catalogue
- Standard lubricant
- T_{amb} = 20 °C for gearboxes,
  T_{amb} = 40 °C for motors (in accordance with EN 60034)
- Site altitude < = 1000 m amsl
- The selection tables provide the permissible mechanical powers and torques. For notes on the thermal power limit, see chapter drive dimensioning.
- The rated power specified for motors and geared motors applies to operating mode S1 (in accordance with EN 60034).

Under different operating conditions, the values obtained may vary from those listed here.
In the case of extreme operating conditions, please consult your Lenze sales office.



Dimensioning

Thermal power limit

The thermal power limit, defined by the heat balance, limits the permissible gearbox continuous power. It may be less than the mechanical power ratings listed in the selection tables.

The thermal power limit is affected by:
- the churning losses in the lubricant. These are determined by the mounting position and the circumferential speed of the gears;
- the load and the speed
- the ambient conditions: temperature, air circulation, input or dissipation via shafts and the foundation

If the following input speeds n_1 are exceeded, please contact Lenze:

Motor frame size	Mounting position A, B, E, F	Mounting position C, D
063 ... 100	4000 r/min	3000 r/min
112 ... 132	3000 r/min	1500 r/min

► For a short period of time up to 5 min, 30 % higher speeds are permissible

Possible ways of extending the application area

- synthetic lubricant (option)
- shaft sealing rings made from FP material/Viton (option)
- reduction in lubricant quantity
- cooling of the geared motor by means of air convection on the machine/system



Dimensioning

Load capacity and application factor

Load capacity c of gearbox
Rated value for the load capacity of Lenze geared motors.
- c is the ratio of the permissible rated torque of the gearbox to the rated torque supplied by the drive component (e.g. the built-in Lenze motor).
- The value of c must always be greater than the value of the application factor k calculated for the application.

Application factor k (according to DIN 3990)
Takes into account the influence of temporally variable loads which are actually present during the anticipated operating time of gearboxes and geared motors.
k is determined by:
- the type of load
- the load intensity
- temporal influences

Duty class	Load type
I	Smooth operation, small or light jolts
II	Uneven operation, average jolts
III	Uneven operation, severe jolts and/or alternating load

Application factor k

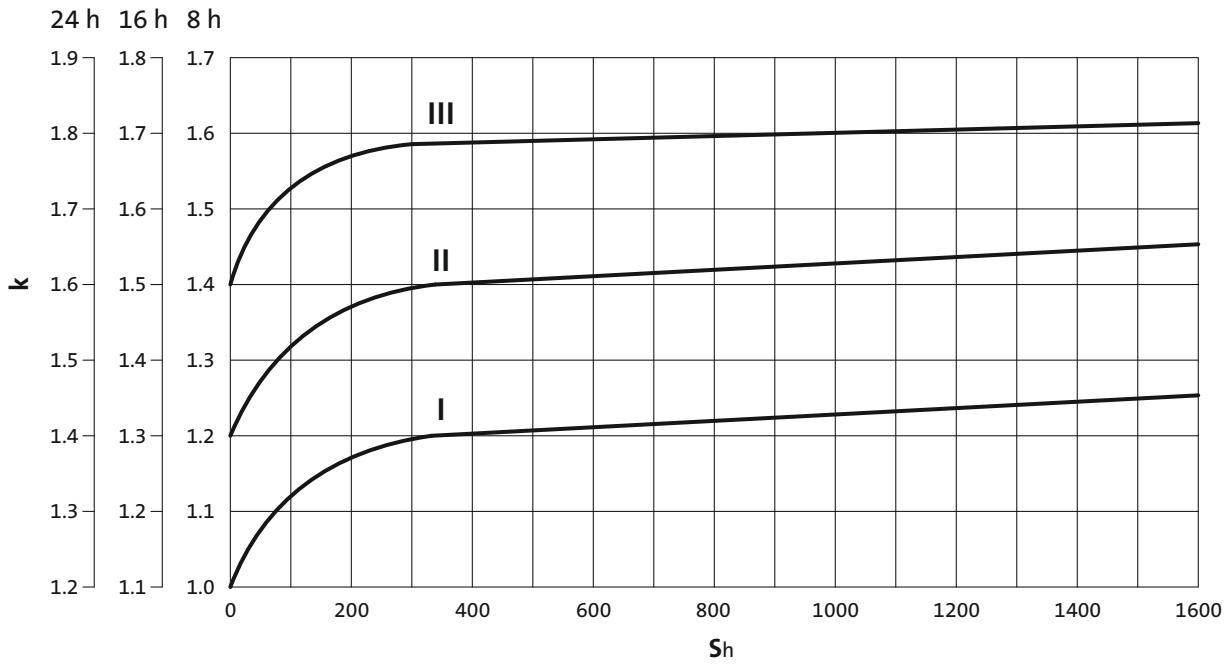

► S_h= switchings/h

Dimensioning

Torque derating at low motor frequencies

Motor size-dependent torque reduction, taking into account the thermal response during operation on the inverter.

Torque characteristics

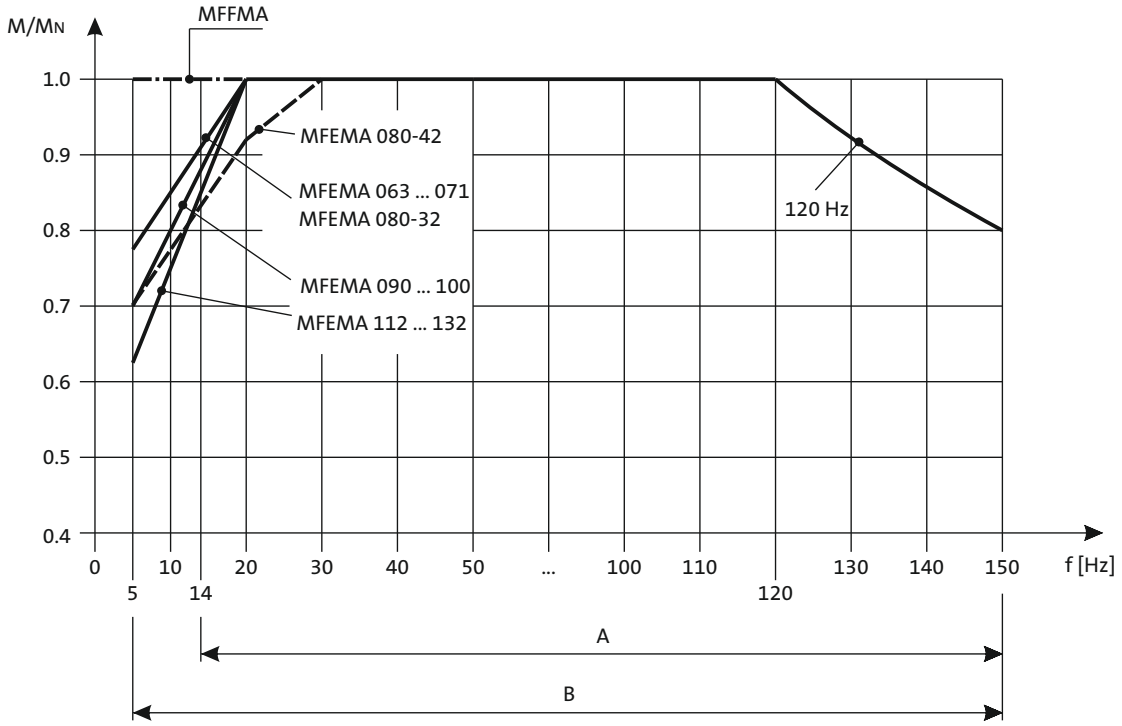

A = Operation with integral fan and brake
B = Operation with integral fan and brake control "Holding current reduction"

You can use the Drive Solution Designer for precise drive dimensioning.

The Drive Solution Designer helps you to carry out a fast and high-quality drive dimensioning.
The software includes well-founded and proven knowledge on drive applications and electro-mechanical drive components.

Please contact your Lenze sales office.



Dimensioning

Weights

The values given in the tables consider the following gearbox/motor combination:
- Gearbox with hollow shaft without flange including lubricant amount for mounting position A
- Motor without built-on accessories (with integral fan)

For versions deviating from this, additional weights have to be considered.

The respective values can be found for:
- Geared motors without built-on accessories
  > Chapter: Geared motors/Technical data
- Gearbox options
  > Chapter: Gearboxes/Technical data and accessories
- Motor options: Spring-applied brake, feedback, 2. Shaft end, handwheel and increased centrifugal mass
  > Chapter: Motors/Accessories

Moments of inertia

The given moments of inertia of the gearbox refer to the drive shaft. The influence of the ratio (i^2) has been considered in the data.

When the total moment of inertia of the geared motor is calculated, the values of the gearbox, motor and accessories have to be added.

The respective values can be found for:
- Gearboxes
  > Chapter: Gearbox/Technical data
- Motors without built-on accessories
  > Chapter: Motors/Technical data/Rated data
- Motor options: Spring-applied brake, feedback, 2. Shaft end, handwheel and increased centrifugal mass
  > Chapter: Motors/Accessories



Selection tables, notes

Notes on the selection tables with 4-pole motors

The selection tables show the available combinations of gearbox type, number of stages, ratio and motor. They are used only to provide basic orientation.
The following legend indicates the structure of the selection tables.

Rated power Prated of the drive motor depending on the rated frequency

120 Hz: P_N = 0.55 kW

2-stufige Getriebe ← **Number of the gear stage of the gearbox**

Torque diagram

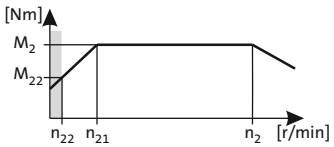

Inverter operation							i	Product		
5 Hz -		- 20 Hz		- 120 Hz (1:24)						
n_{22} [r/min]	M_{22} [Nm]	n_{21} [r/min]	M_2 [Nm]	n_2 [r/min]	M_2 [Nm]	c		g500	MF□MA□□	
28	5.7	116	8.0	663	8.0	3.9	5.185	-B110	063-32	37
27	5.9	111	8.0	636	8.0	3.8	5.411	-B45	063-32	22

Product Gearbox | **Product Motor** | **Ratio i** | **Page number for dimensions**

Inverter operation
The speed and torque data are valid for self-ventilated and forced ventilated drives. Forced ventilated drives can always output the torque **M2** in the entire setting ranges. In the case of self-ventilated drives, a reduction to **M22** is required in the lower speed range.

The following applies to self-ventilated geared motors:
n22 is the minimum speed where the torque **M22** is permissible, from **n21** to **n2**, the maximum torque is **M2**
The following applies to forced ventilated geared motors:
From the minimum speed **n22** to **n2**, the maximum torque is **M2**

Load capacity c of the gearbox
c is the ratio between the permissible rated torque of the gearbox and the rated torque of the three-phase AC motor (converted to the driven shaft).
c must be always higher than the service factor **k** determined for the application **k**.

$$c = \frac{M_{2,zul}}{M_{1N} \cdot i \cdot \eta_{Getr}} > k$$

Motor voltages

The power values and torques indicated in the selection tables relate to the following motor voltages:
- 50 Hz : Δ 230 V / Y 400 V
- 60 Hz : 230 V or 460 V
- 87 Hz : Δ 400 V

Operation at 87 Hz

In 87 Hz operation, the three-phase AC motor (which is designed for a voltage of Δ 230 V / Y 400 V at 50 Hz) is operated on an inverter with 400 V rated voltage in a delta connection. It is important to note here that the inverter must be configured for 87Hz output.
This offers the following advantages over 50 Hz operation:
- the setting range of the motor is increased by a factor of 1.73.
- the motor can then provide around 1.73 times greater output, which in turn allows a smaller and more affordable motor to be selected for the application.
- the efficiency of the motor is also improved.



Selection tables, 4-pole motors

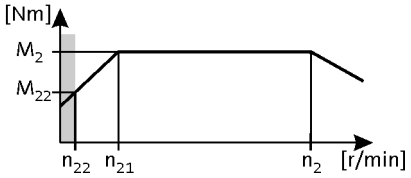

120 Hz: P_N = 0.55 kW

2-stage gearboxes

Inverter operation							i	Product		
5 Hz -		- 20 Hz		- 120 Hz (1:24)						
n_{22} [r/min]	M_{22} [Nm]	n_{21} [r/min]	M_2 [Nm]	n_2 [r/min]	M_2 [Nm]	c		g500	MF□MA□□	
16	10	66	13	378	13	4.5	9.101	-B110	063-32	35
16	10	66	13	378	13	2.6	9.101	-B45	063-32	32
14	12	57	15	329	15	4.5	10.466	-B110	063-32	35
14	12	57	15	329	15	2.3	10.466	-B45	063-32	32
13	13	52	17	301	17	4.1	11.449	-B110	063-32	35
13	13	52	17	296	17	2.0	11.640	-B45	063-32	32
11	14	47	18	271	18	3.7	12.698	-B110	063-32	35
11	15	45	19	257	19	1.8	13.386	-B45	063-32	32
9.9	16	41	21	236	21	3.2	14.603	-B110	063-32	35
9.6	17	40	22	228	22	1.6	15.111	-B45	063-32	32
9.3	17	39	23	221	23	3.1	15.556	-B110	063-32	35
8.3	19	35	25	198	25	1.4	17.378	-B45	063-32	32
8.1	20	34	26	192	26	2.8	17.889	-B110	063-32	35
7.5	21	31	28	178	28	1.2	19.365	-B45	063-32	32
7.4	22	31	28	176	28	2.7	19.556	-B110	063-32	35
6.5	24	27	32	155	32	1.1	22.270	-B45	063-32	32
6.4	25	27	33	153	33	2.4	22.489	-B110	063-32	35
5.8	28	24	36	137	36	1.1	25.051	-B45	063-32	32
5.8	28	24	37	137	37	2.2	25.185	-B110	063-32	35
5.0	32	21	42	119	42	2.0	28.963	-B110	063-32	35
4.5	35	19	46	108	46	1.8	31.919	-B110	063-32	35
4.3	37	18	48	103	48	3.2	33.433	-B240	063-32	38
4.0	40	16	53	94	53	1.6	36.707	-B110	063-32	35
3.9	41	16	54	92	54	1.5	37.400	-B110	063-32	35
3.8	42	16	55	91	55	3.2	37.967	-B240	063-32	38
3.6	44	15	58	86	58	1.2	40.000	-B110	063-32	35
3.4	48	14	63	80	63	3.2	43.267	-B240	063-32	38
3.2	51	13	67	75	67	1.2	46.000	-B110	063-32	35
3.0	53	13	70	71	70	1.4	48.167	-B110	063-32	35
3.0	54	12	71	70	71	2.9	49.133	-B240	063-32	38
2.8	58	11	76	66	76	2.6	52.510	-B240	063-32	38
2.4	66	10	86	58	86	2.4	59.630	-B240	063-32	38
2.4	67	9.8	89	56	89	1.2	61.045	-B110	063-32	35
2.2	74	8.9	97	51	97	1.5	67.113	-B240	063-32	38
1.9	84	7.9	111	45	111	1.5	76.213	-B240	063-32	38



Selection tables, 4-pole motors

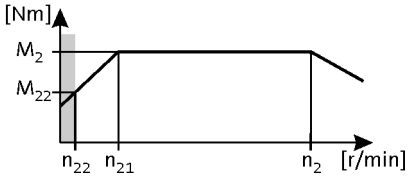

120 Hz: P_N = 0.55 kW

3-stage gearboxes

Inverter operation							i	Product		
5 Hz -		- 20 Hz		- 120 Hz (1:24)						
n_{22} [r/min]	M_{22} [Nm]	n_{21} [r/min]	M_2 [Nm]	n_2 [r/min]	M_2 [Nm]	c		g500	MF□MA□□	
2.1	73	8.8	97	50	97	2.1	68.459	-B240	063-32	38
1.9	83	7.7	110	44	110	1.9	77.741	-B240	063-32	38
1.7	94	6.9	124	39	124	1.7	87.563	-B240	063-32	38
1.6	98	6.7	130	38	130	3.0	89.534	-B450	063-32	41
1.5	109	6.0	144	35	144	2.7	99.274	-B450	063-32	41
1.5	106	6.0	141	35	141	1.5	99.437	-B240	063-32	38
1.3	122	5.4	162	31	162	2.7	111.372	-B450	063-32	41
1.3	122	5.3	161	30	161	1.4	113.673	-B240	063-32	38
1.2	136	4.9	179	28	179	2.4	123.487	-B450	063-32	41
1.1	138	4.6	183	27	183	1.3	129.087	-B240	063-32	38
1.0	158	4.2	209	24	209	2.1	144.128	-B450	063-32	41
1.0	156	4.1	206	24	206	1.1	145.674	-B240	063-32	38
0.9	175	3.8	232	22	232	1.9	159.807	-B450	063-32	41
0.8	192	3.4	254	20	254	1.7	174.919	-B450	063-32	41
0.7	213	3.1	281	18	281	1.5	193.948	-B450	063-32	41
0.6	245	2.7	324	15	324	1.3	223.563	-B450	063-32	41
0.6	272	2.4	359	14	359	1.2	247.882	-B450	063-32	41



Selection tables, 4-pole motors

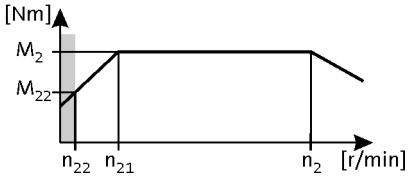

120 Hz: P_N = 0.75 kW

2-stage gearboxes

Inverter operation							i	Product		
5 Hz -		- 20 Hz		- 120 Hz (1:24)						
n_{22} [r/min]	M_{22} [Nm]	n_{21} [r/min]	M_2 [Nm]	n_2 [r/min]	M_2 [Nm]	c		g500	MF□MA□□	
16	14	66	18	374	18	3.3	9.101	-B110	063-42	35
16	14	66	18	374	18	1.9	9.101	-B45	063-42	32
14	16	57	21	325	21	3.2	10.466	-B110	063-42	35
14	16	57	21	325	21	1.6	10.466	-B45	063-42	32
13	17	52	23	297	23	3.0	11.449	-B110	063-42	35
13	17	52	23	292	23	1.5	11.640	-B45	063-42	32
11	19	47	25	268	25	2.7	12.698	-B110	063-42	35
11	20	45	27	254	27	1.3	13.386	-B45	063-42	32
9.9	22	41	29	233	29	2.3	14.603	-B110	063-42	35
9.6	23	40	30	225	30	1.1	15.111	-B45	063-42	32
9.3	23	39	31	219	31	2.3	15.556	-B110	063-42	35
8.1	27	34	36	190	36	2.0	17.889	-B110	063-42	35
7.4	29	31	39	174	39	2.0	19.556	-B110	063-42	35
6.4	34	27	45	151	45	1.8	22.489	-B110	063-42	35
5.8	38	24	50	135	50	1.6	25.185	-B110	063-42	35
5.4	40	22	54	127	54	2.7	26.878	-B240	063-42	38
5.0	43	21	58	117	58	1.4	28.963	-B110	063-42	35
4.8	46	20	61	111	61	2.7	30.522	-B240	063-42	38
4.5	48	19	64	107	64	1.3	31.919	-B110	063-42	35
4.3	50	18	67	102	67	2.3	33.433	-B240	063-42	38
4.0	55	16	73	93	73	1.1	36.707	-B110	063-42	35
3.9	56	16	75	91	75	1.1	37.400	-B110	063-42	35
3.8	57	16	76	90	76	2.3	37.967	-B240	063-42	38
3.4	65	14	87	79	87	2.3	43.267	-B240	063-42	38
3.0	74	12	98	69	98	2.1	49.133	-B240	063-42	38
2.8	79	11	105	65	105	1.9	52.510	-B240	063-42	38
2.4	89	10	119	57	119	1.7	59.630	-B240	063-42	38
2.2	101	8.9	134	51	134	1.1	67.113	-B240	063-42	38
1.9	114	7.9	153	45	153	1.1	76.213	-B240	063-42	38

3-stage gearboxes

Inverter operation							i	Product		
5 Hz -		- 20 Hz		- 120 Hz (1:24)						
n_{22} [r/min]	M_{22} [Nm]	n_{21} [r/min]	M_2 [Nm]	n_2 [r/min]	M_2 [Nm]	c		g500	MF□MA□□	
4.0	54	17	73	94	73	2.7	36.373	-B450	063-42	41
3.6	60	15	81	84	81	3.1	40.330	-B450	063-42	41
3.2	68	13	91	75	91	2.6	45.245	-B450	063-42	41
2.9	75	12	100	68	100	2.6	50.167	-B450	063-42	41
2.3	93	9.6	125	55	125	3.1	62.262	-B450	063-42	41
2.1	100	8.8	134	50	134	1.6	68.459	-B240	063-42	38



Selection tables, 4-pole motors

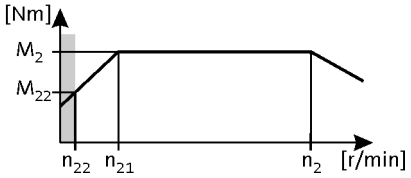

120 Hz: P_N = 0.75 kW

3-stage gearboxes

Inverter operation							i	Product		
5 Hz -		- 20 Hz		- 120 Hz (1:24)						
n_{22} [r/min]	M_{22} [Nm]	n_{21} [r/min]	M_2 [Nm]	n_2 [r/min]	M_2 [Nm]	c		g500	MF□MA□□	
1.7	128	6.9	171	39	171	1.2	87.563	-B240	063-42	38
1.6	134	6.7	179	38	179	2.2	89.534	-B450	063-42	41
1.5	149	6.0	199	34	199	2.0	99.274	-B450	063-42	41
1.5	145	6.0	194	34	194	1.1	99.437	-B240	063-42	38
1.3	167	5.4	223	31	223	1.9	111.372	-B450	063-42	41
1.3	166	5.3	222	30	222	1.0	113.673	-B240	063-42	38
1.2	185	4.9	247	28	247	1.8	123.487	-B450	063-42	41
1.0	216	4.2	288	24	288	1.5	144.128	-B450	063-42	41
0.9	239	3.8	320	21	320	1.4	159.807	-B450	063-42	41
0.8	262	3.4	350	19	350	1.2	174.919	-B450	063-42	41
0.7	290	3.1	388	18	388	1.1	193.948	-B450	063-42	41



Selection tables, 4-pole motors

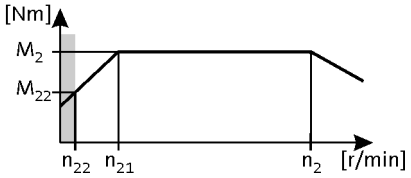

120 Hz: P_N = 1.1 kW

2-stage gearboxes

Inverter operation							i	Product		
5 Hz -		- 20 Hz		- 120 Hz (1:24)						
n_{22} [r/min]	M_{22} [Nm]	n_{21} [r/min]	M_2 [Nm]	n_2 [r/min]	M_2 [Nm]	c		g500	MF□MA□□	
23	14	96	18	558	18	4.2	6.257	-B240	071-32	38
16	20	66	26	384	26	2.4	9.101	-B110	071-32	35
14	23	57	30	334	30	2.2	10.466	-B110	071-32	35
13	25	52	33	305	33	2.1	11.449	-B110	071-32	35
11	28	47	36	275	36	1.9	12.698	-B110	071-32	35
9.9	32	41	42	239	42	1.6	14.603	-B110	071-32	35
9.3	34	39	44	224	44	1.6	15.556	-B110	071-32	35
8.1	39	34	51	195	51	1.4	17.889	-B110	071-32	35
7.4	43	31	56	179	56	1.4	19.556	-B110	071-32	35
7.0	45	29	59	169	59	3.1	20.650	-B240	071-32	38
6.4	49	27	64	155	64	1.2	22.489	-B110	071-32	35
6.2	52	26	67	149	67	2.7	23.450	-B240	071-32	38
5.8	55	24	72	139	72	1.1	25.185	-B110	071-32	35
5.4	59	22	77	130	77	2.4	26.878	-B240	071-32	38
5.0	64	21	83	121	83	1.0	28.963	-B110	071-32	35
4.8	67	20	87	114	87	2.1	30.522	-B240	071-32	38
4.3	73	18	96	104	96	1.9	33.433	-B240	071-32	38
3.8	83	16	109	92	109	1.7	37.967	-B240	071-32	38
3.4	95	14	124	81	124	1.7	43.267	-B240	071-32	38
3.0	108	12	140	71	140	1.5	49.133	-B240	071-32	38
2.8	115	11	150	67	150	1.3	52.510	-B240	071-32	38
2.4	131	10	171	59	171	1.2	59.630	-B240	071-32	38

3-stage gearboxes

Inverter operation							i	Product		
5 Hz -		- 20 Hz		- 120 Hz (1:24)						
n_{22} [r/min]	M_{22} [Nm]	n_{21} [r/min]	M_2 [Nm]	n_2 [r/min]	M_2 [Nm]	c		g500	MF□MA□□	
4.0	80	17	104	96	104	3.2	36.373	-B450	071-32	41
3.6	89	15	115	87	115	3.4	40.330	-B450	071-32	41
3.2	99	13	129	77	129	3.0	45.245	-B450	071-32	41
2.9	110	12	143	70	143	2.7	50.167	-B450	071-32	41
2.6	123	11	161	62	161	2.4	56.154	-B450	071-32	41
2.3	137	9.6	178	56	178	2.2	62.262	-B450	071-32	41
2.1	151	8.7	197	51	197	2.0	68.788	-B450	071-32	41
1.9	167	7.9	218	46	218	1.8	76.271	-B450	071-32	41
1.6	197	6.7	256	39	256	1.5	89.534	-B450	071-32	41
1.5	218	6.0	284	35	284	1.4	99.274	-B450	071-32	41
1.3	245	5.4	318	31	318	1.3	111.372	-B450	071-32	41
1.2	271	4.9	353	28	353	1.2	123.487	-B450	071-32	41
1.0	316	4.2	412	24	412	1.0	144.128	-B450	071-32	41



Selection tables, 4-pole motors

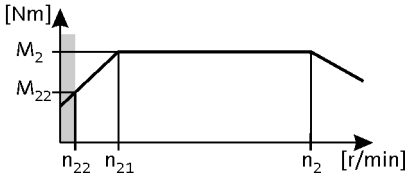

120 Hz: P_N = 1.5 kW

2-stage gearboxes

Inverter operation							i	Product		
5 Hz -		- 20 Hz		- 120 Hz (1:24)						
n_{22} [r/min]	M_{22} [Nm]	n_{21} [r/min]	M_2 [Nm]	n_2 [r/min]	M_2 [Nm]	c		g500	MF□MA□□	
23	19	96	25	551	25	3.1	6.257	-B240	071-42	38
16	27	66	36	379	36	1.8	9.101	-B110	071-42	35
14	31	57	41	330	41	1.6	10.466	-B110	071-42	35
13	34	52	45	301	45	1.5	11.449	-B110	071-42	35
12	36	50	48	286	48	3.1	12.081	-B240	071-42	38
11	38	47	50	272	50	1.4	12.698	-B110	071-42	35
11	41	44	54	252	54	3.0	13.719	-B240	071-42	38
9.9	44	41	58	236	58	1.2	14.603	-B110	071-42	35
9.7	45	40	59	230	59	2.9	15.008	-B240	071-42	38
9.3	47	39	61	222	61	1.1	15.556	-B110	071-42	35
8.6	51	36	66	205	66	2.7	16.857	-B240	071-42	38
8.1	54	34	71	193	71	1.0	17.889	-B110	071-42	35
7.6	57	31	76	180	76	2.4	19.143	-B240	071-42	38
7.0	62	29	81	167	81	2.2	20.650	-B240	071-42	38
6.2	70	26	92	147	92	2.0	23.450	-B240	071-42	38
5.4	81	22	106	128	106	1.7	26.878	-B240	071-42	38
4.8	91	20	120	113	120	1.5	30.522	-B240	071-42	38
4.3	100	18	132	103	132	1.4	33.433	-B240	071-42	38
3.8	114	16	150	91	150	1.2	37.967	-B240	071-42	38
3.4	130	14	171	80	171	1.2	43.267	-B240	071-42	38
3.0	147	12	194	70	194	1.1	49.133	-B240	071-42	38

3-stage gearboxes

Inverter operation							i	Product		
5 Hz -		- 20 Hz		- 120 Hz (1:24)						
n_{22} [r/min]	M_{22} [Nm]	n_{21} [r/min]	M_2 [Nm]	n_2 [r/min]	M_2 [Nm]	c		g500	MF□MA□□	
8.9	49	37	64	211	64	3.1	16.349	-B450	071-42	41
8.1	54	34	71	193	71	3.1	17.885	-B450	071-42	41
7.3	59	30	78	174	78	3.1	19.831	-B450	071-42	41
6.4	68	26	90	151	90	2.9	22.813	-B450	071-42	41
5.7	76	24	100	136	100	2.9	25.294	-B450	071-42	41
5.2	84	22	110	124	110	2.6	27.945	-B450	071-42	41
4.7	93	19	122	111	122	2.6	30.985	-B450	071-42	41
4.0	109	17	143	95	143	2.3	36.373	-B450	071-42	41
3.6	121	15	159	86	159	2.4	40.330	-B450	071-42	41
3.2	135	13	178	76	178	2.2	45.245	-B450	071-42	41
2.9	150	12	198	69	198	2.0	50.167	-B450	071-42	41
2.6	168	11	221	61	221	1.8	56.154	-B450	071-42	41
2.3	186	9.6	246	55	246	1.6	62.262	-B450	071-42	41
2.1	206	8.7	271	50	271	1.4	68.788	-B450	071-42	41



Selection tables, 4-pole motors

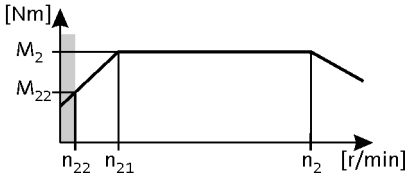

120 Hz: P_N = 1.5 kW

3-stage gearboxes

Inverter operation							i	Product		
5 Hz -		- 20 Hz		- 120 Hz (1:24)						
n_{22} [r/min]	M_{22} [Nm]	n_{21} [r/min]	M_2 [Nm]	n_2 [r/min]	M_2 [Nm]	c		g500	MF□MA□□	
1.9	228	7.9	301	45	301	1.3	76.271	-B450	071-42	41
1.6	268	6.7	353	39	353	1.1	89.534	-B450	071-42	41



Selection tables, 4-pole motors

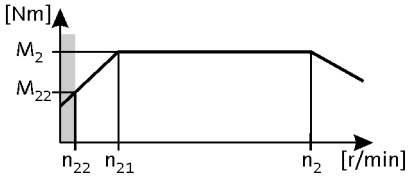

120 Hz: P_N = 2.2 kW

2-stage gearboxes

Inverter operation							i	Product		
5 Hz -		- 20 Hz		- 120 Hz (1:24)						
n_{22} [r/min]	M_{22} [Nm]	n_{21} [r/min]	M_2 [Nm]	n_2 [r/min]	M_2 [Nm]	c		g500	MF□MA□□	
23	27	96	36	559	36	3.3	6.257	-B240	080-32	38
16	39	66	52	385	52	1.2	9.101	-B110	080-32	35
14	45	57	60	334	60	1.1	10.466	-B110	080-32	35
13	49	52	65	306	65	1.0	11.449	-B110	080-32	35
12	52	50	69	290	69	2.3	12.081	-B240	080-32	38
11	59	44	78	255	78	2.1	13.719	-B240	080-32	38
9.7	64	40	86	233	86	2.0	15.008	-B240	080-32	38
8.6	72	36	96	208	96	1.9	16.857	-B240	080-32	38
7.6	82	31	109	183	109	1.7	19.143	-B240	080-32	38
7.0	88	29	118	170	118	1.5	20.650	-B240	080-32	38
6.2	100	26	134	149	134	1.4	23.450	-B240	080-32	38
5.4	115	22	153	130	153	1.2	26.878	-B240	080-32	38
4.8	131	20	174	115	174	1.0	30.522	-B240	080-32	38

3-stage gearboxes

Inverter operation							i	Product		
5 Hz -		- 20 Hz		- 120 Hz (1:24)						
n_{22} [r/min]	M_{22} [Nm]	n_{21} [r/min]	M_2 [Nm]	n_2 [r/min]	M_2 [Nm]	c		g500	MF□MA□□	
7.3	85	30	113	177	113	3.0	19.831	-B450	080-32	41
6.4	98	26	130	153	130	2.6	22.813	-B450	080-32	41
5.7	108	24	144	138	144	2.4	25.294	-B450	080-32	41
5.2	119	22	159	125	159	2.1	27.945	-B450	080-32	41
4.7	132	19	177	113	177	1.9	30.985	-B450	080-32	41
4.0	156	17	207	96	207	1.6	36.373	-B450	080-32	41
3.6	172	15	230	87	230	1.7	40.330	-B450	080-32	41
3.2	193	13	258	77	258	1.5	45.245	-B450	080-32	41
2.9	214	12	286	70	286	1.4	50.167	-B450	080-32	41
2.6	240	11	320	62	320	1.2	56.154	-B450	080-32	41
2.3	266	9.6	355	56	355	1.1	62.262	-B450	080-32	41



Selection tables, 4-pole motors

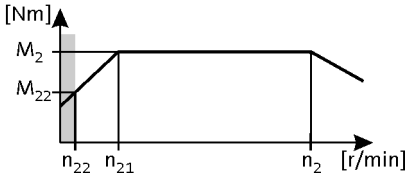

120 Hz: P_N = 3.0 kW

2-stage gearboxes

Inverter operation							i	Product		
5 Hz -		- 30 Hz		- 120 Hz (1:24)						
n_{22} [r/min]	M_{22} [Nm]	n_{21} [r/min]	M_2 [Nm]	n_2 [r/min]	M_2 [Nm]	c		g500	MF□MA□□	
23	37	144	49	556	49	2.4	6.257	-B240	080-42	38
12	71	75	94	288	94	1.7	12.081	-B240	080-42	38
11	81	66	107	254	107	1.5	13.719	-B240	080-42	38
9.7	88	60	117	232	117	1.4	15.008	-B240	080-42	38
8.6	99	53	132	206	132	1.4	16.857	-B240	080-42	38
7.6	112	47	150	182	150	1.2	19.143	-B240	080-42	38
7.0	121	44	162	169	162	1.1	20.650	-B240	080-42	38

3-stage gearboxes

Inverter operation							i	Product		
5 Hz -		- 30 Hz		- 120 Hz (1:24)						
n_{22} [r/min]	M_{22} [Nm]	n_{21} [r/min]	M_2 [Nm]	n_2 [r/min]	M_2 [Nm]	c		g500	MF□MA□□	
8.9	96	55	128	213	128	2.6	16.349	-B450	080-42	41
8.1	105	50	140	195	140	2.4	17.885	-B450	080-42	41
7.3	116	45	155	176	155	2.2	19.831	-B450	080-42	41
6.4	134	40	178	153	178	1.9	22.813	-B450	080-42	41
5.7	148	36	198	138	198	1.7	25.294	-B450	080-42	41
5.2	164	32	219	125	219	1.6	27.945	-B450	080-42	41
4.7	182	29	242	112	242	1.4	30.985	-B450	080-42	41
4.0	213	25	284	96	284	1.2	36.373	-B450	080-42	41
3.6	237	22	315	86	315	1.2	40.330	-B450	080-42	41
3.2	265	20	354	77	354	1.1	45.245	-B450	080-42	41



Selection tables, 4-pole motors

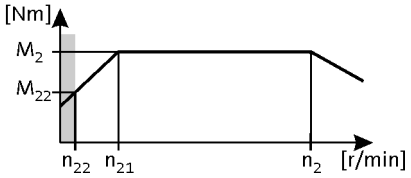

120 Hz: P_N = 4.0 kW

2-stage gearboxes

Inverter operation							i	Product		
5 Hz -		- 20 Hz		- 120 Hz (1:24)						
n_{22} [r/min]	M_{22} [Nm]	n_{21} [r/min]	M_2 [Nm]	n_2 [r/min]	M_2 [Nm]	c		g500	MF□MA□□	
23	46	96	65	556	65	1.8	6.257	-B240	090-32	38
8.6	123	36	176	206	176	1.0	16.857	-B240	090-32	38

3-stage gearboxes

Inverter operation							i	Product		
5 Hz -		- 20 Hz		- 120 Hz (1:24)						
n_{22} [r/min]	M_{22} [Nm]	n_{21} [r/min]	M_2 [Nm]	n_2 [r/min]	M_2 [Nm]	c		g500	MF□MA□□	
8.9	119	37	170	213	170	1.9	16.349	-B450	090-32	41
8.1	131	34	186	195	186	1.8	17.885	-B450	090-32	41
7.3	145	30	207	176	207	1.6	19.831	-B450	090-32	41
6.4	167	26	238	153	238	1.4	22.813	-B450	090-32	41
5.7	185	24	264	138	264	1.3	25.294	-B450	090-32	41
5.2	204	22	291	125	291	1.2	27.945	-B450	090-32	41
4.7	226	19	323	112	323	1.1	30.985	-B450	090-32	41



Selection tables, 4-pole motors

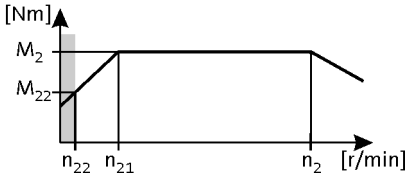

120 Hz: P_N = 5.5 kW

3-stage gearboxes

Inverter operation							i	Product		
5 Hz -		- 20 Hz		- 120 Hz (1:24)						
n_{22} [r/min]	M_{22} [Nm]	n_{21} [r/min]	M_2 [Nm]	n_2 [r/min]	M_2 [Nm]	c		g500	MF□MA□□	
6.4	226	26	323	155	323	1.1	22.813	-B450	100-12	41



Dimensions, notes

Notes on the dimensions

The following legend shows the layout of the dimension sheets.

Product gearbox

g500-B110

Driven shaft design

Abmessungen mit Hohlwelle

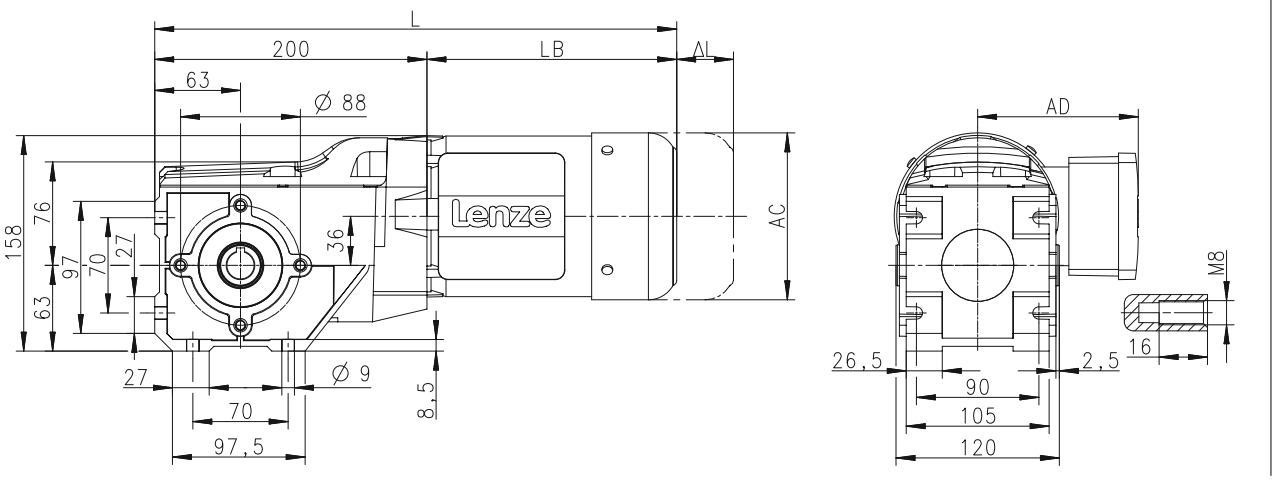

Product Motor

Produkt			MD□MA□□							
			063-12	063-32	063-42	071-32	071-42	080-32	080-42	090-32
Abmessungen										
Gesamtlänge	**L**	**[mm]**		358		378		395		419
Länge Motor	**LB**	**[mm]**		187		207		224.5		248
Länge Motoranbauten	**Δ L**	**[mm]**		170		165		183		181
Motordurchmesser	**AC**	**[mm]**		123		139		156		176
Abstand Motor/Anschluss	**AD**	**[mm]**		100		109		150		157

Distance of motor centre to the end of terminal box

Total length of the drive without built-on accessories

Motor diameter

Motor length without built-on accessories

Additional length of the built-on accessories (longest version)



Dimensions, 4-pole motors

g500-B45

Dimensions with hollow shaft

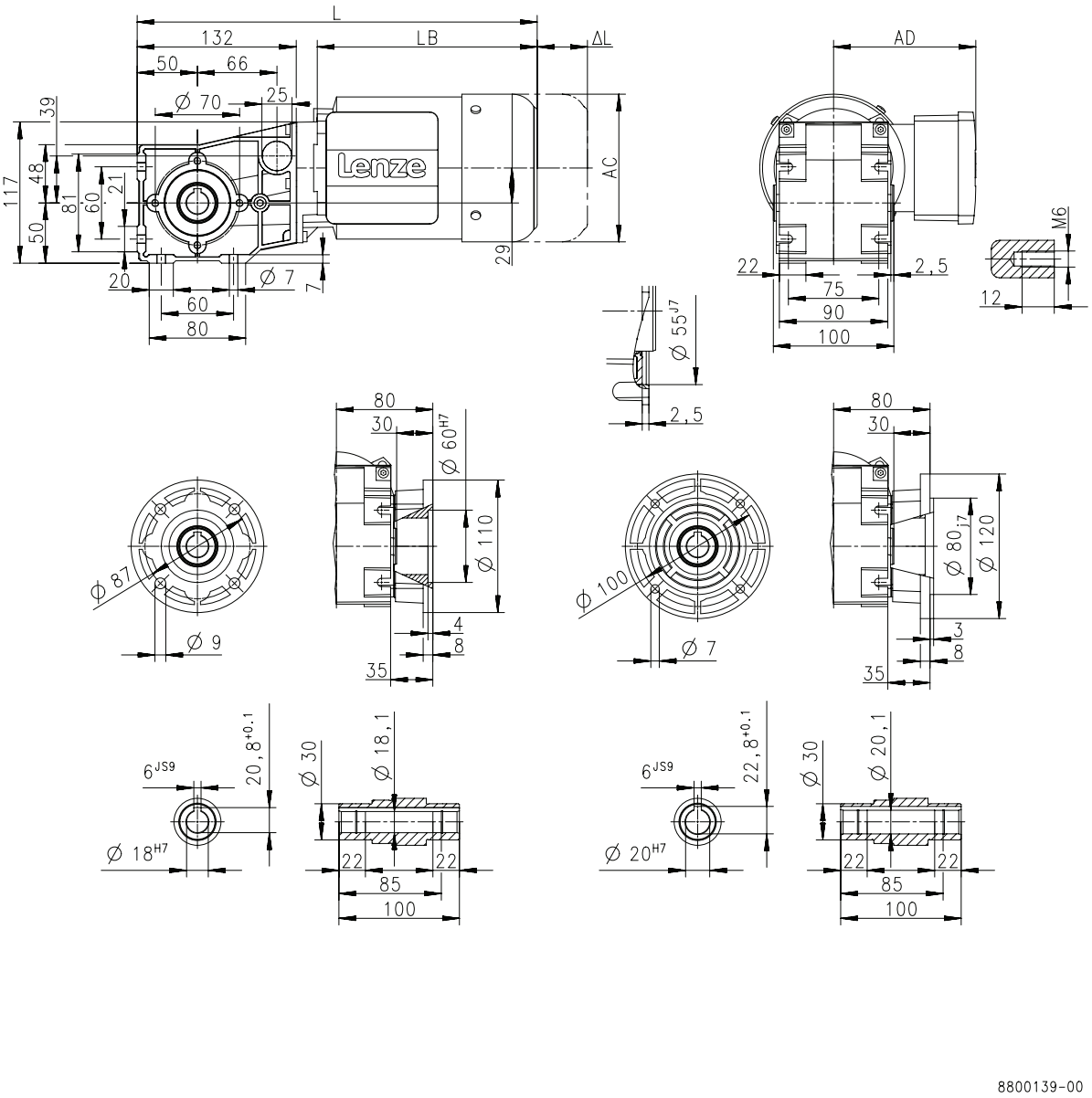

Product			MF□MA□□	
			063-32	063-42
Dimensions				
Total length	**L**	**[mm]**	332	
Motor length	**LB**	**[mm]**	183	
Length of motor options	**Δ L**	**[mm]**	170	
Motor diameter	**AC**	**[mm]**	123	
Distance motor/connection	**AD**	**[mm]**	100	



Dimensions, 4-pole motors

g500-B45

Dimensions with solid shaft

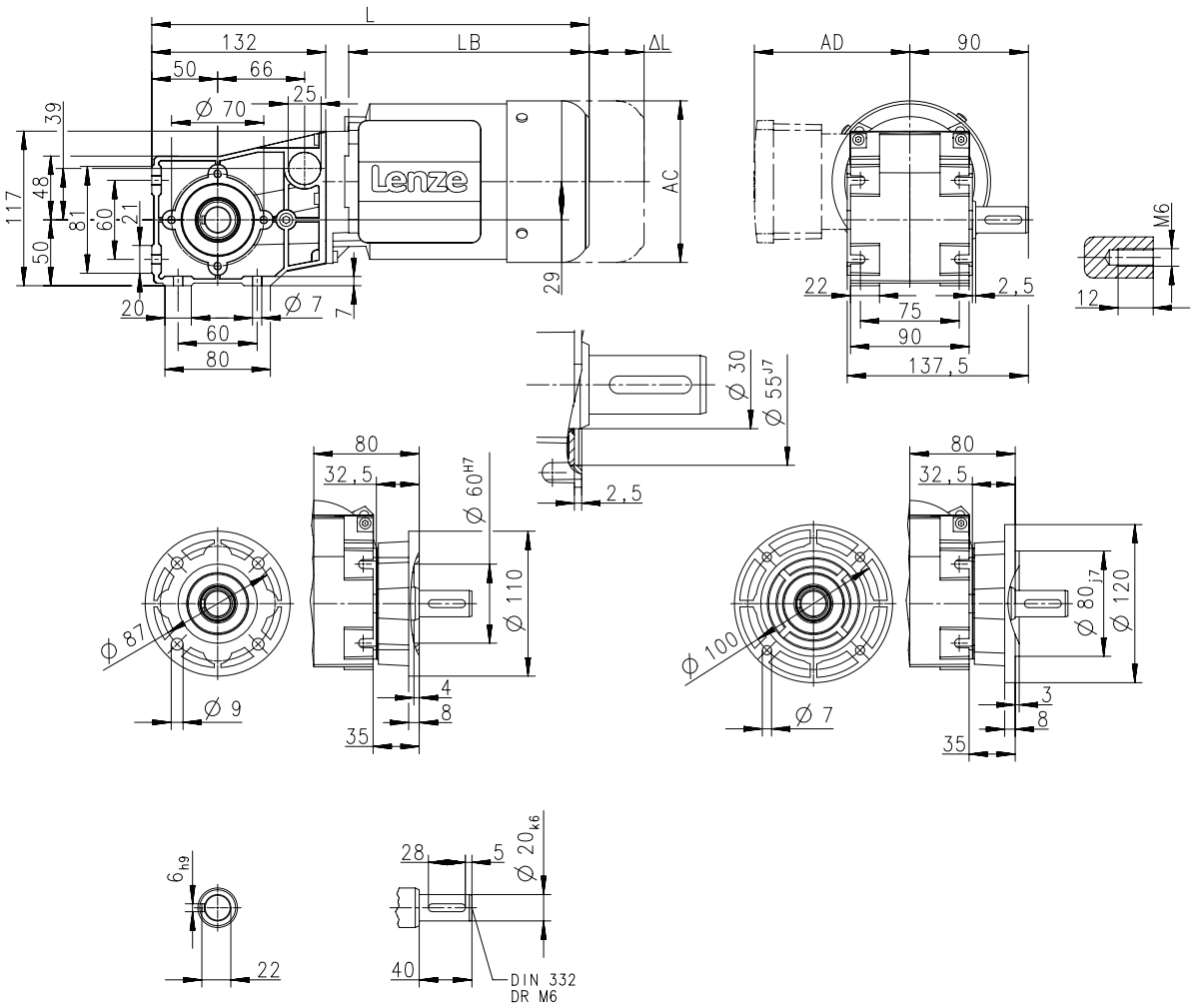

Product			MF□MA□□	
			063-32	063-42
Dimensions				
Total length	**L**	**[mm]**	332	
Motor length	**LB**	**[mm]**	183	
Length of motor options	**Δ L**	**[mm]**	170	
Motor diameter	**AC**	**[mm]**	123	
Distance motor/connection	**AD**	**[mm]**	100	



Dimensions, 4-pole motors

g500-B45

Dimensions with shrink disc

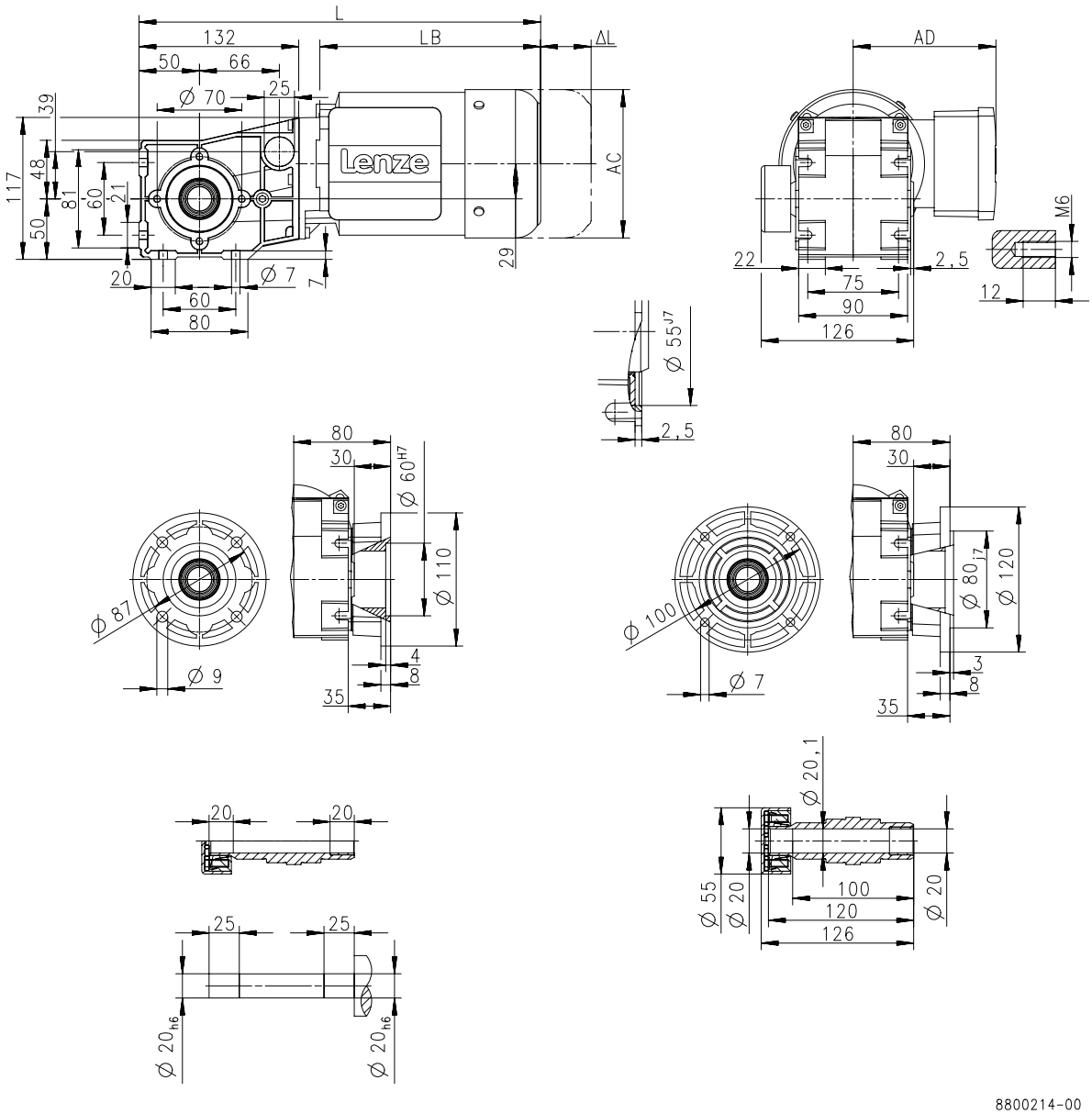

Product			MF□MA□□	
			063-32	063-42
Dimensions				
Total length	**L**	**[mm]**	332	
Motor length	**LB**	**[mm]**	183	
Length of motor options	**Δ L**	**[mm]**	170	
Motor diameter	**AC**	**[mm]**	123	
Distance motor/connection	**AD**	**[mm]**	100	



Dimensions, 4-pole motors

g500-B110

Dimensions with hollow shaft

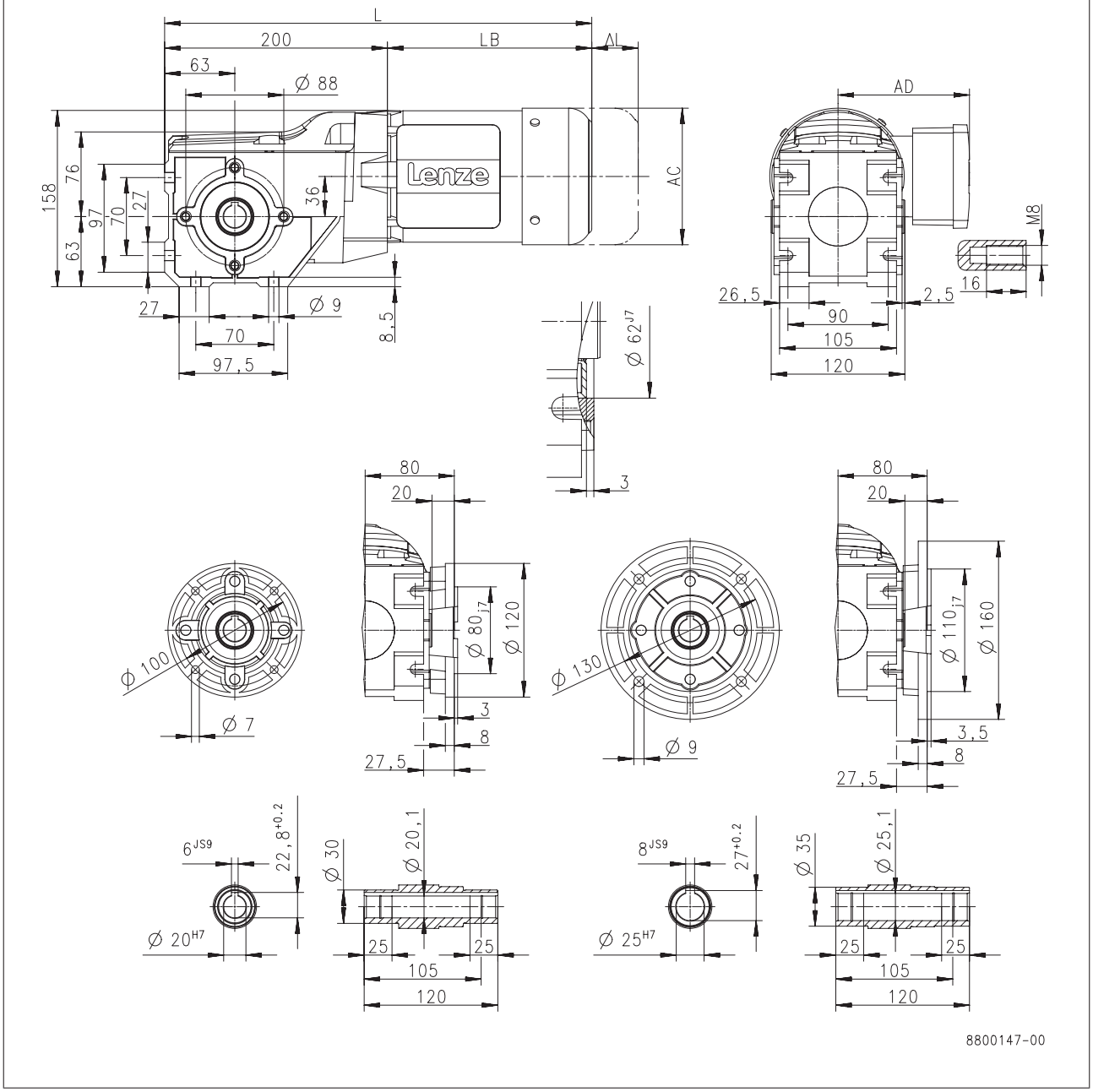

Product			MF□MA□□				
			063-32	063-42	071-32	071-42	080-32
Dimensions							
Total length	**L**	**[mm]**	383		403		426
Motor length	**LB**	**[mm]**	183		203		226
Length of motor options	**Δ L**	**[mm]**	170		165		183
Motor diameter	**AC**	**[mm]**	123		139		156
Distance motor/connection	**AD**	**[mm]**	100		109		150



Dimensions, 4-pole motors

g500-B110

Dimensions with solid shaft

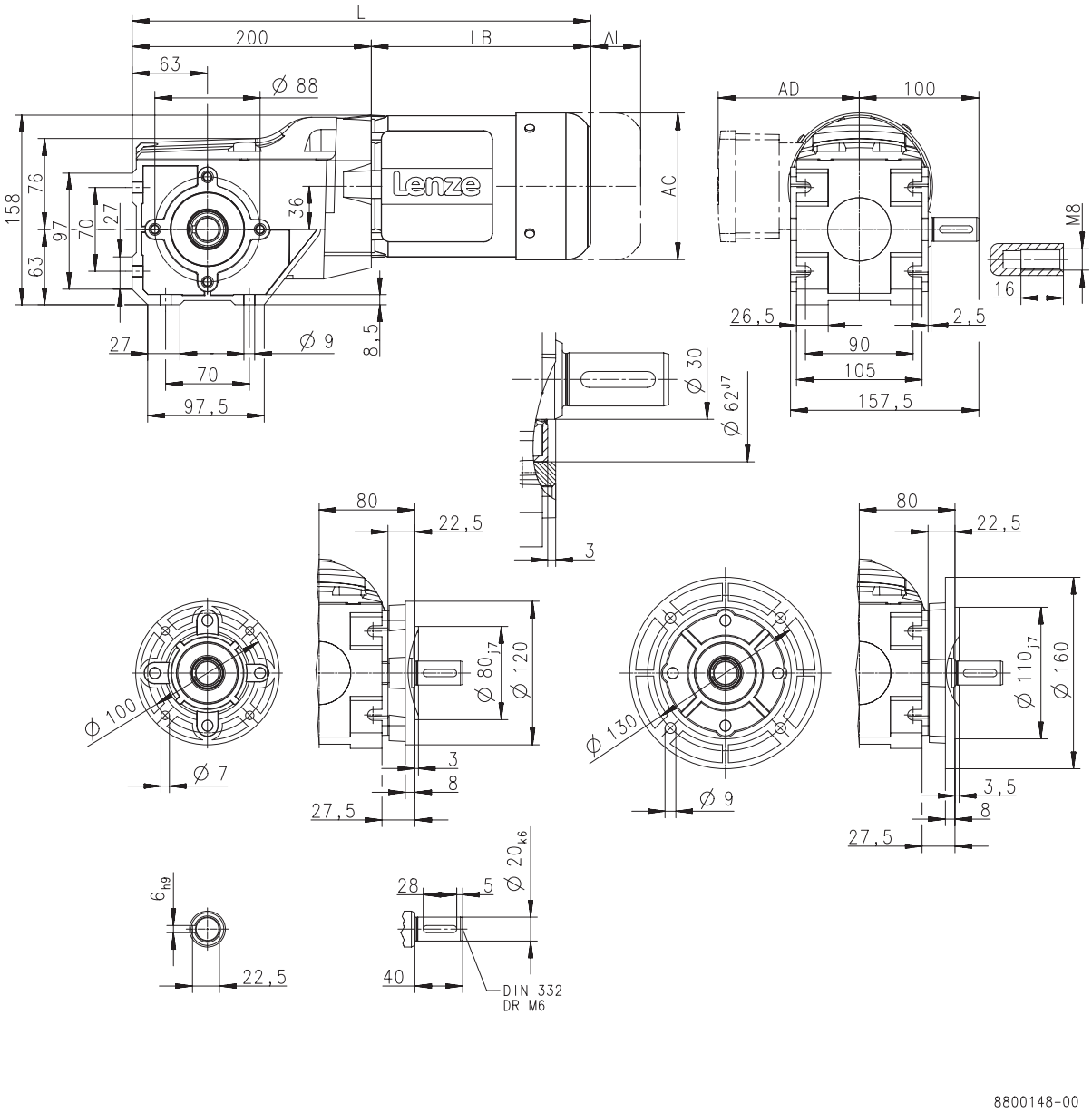

Product			MF□MA□□				
			063-32	063-42	071-32	071-42	080-32
Dimensions							
Total length	**L**	**[mm]**	383		403		426
Motor length	**LB**	**[mm]**	183		203		226
Length of motor options	**Δ L**	**[mm]**	170		165		183
Motor diameter	**AC**	**[mm]**	123		139		156
Distance motor/connection	**AD**	**[mm]**	100		109		150



Dimensions, 4-pole motors

g500-B110

Dimensions with shrink disc

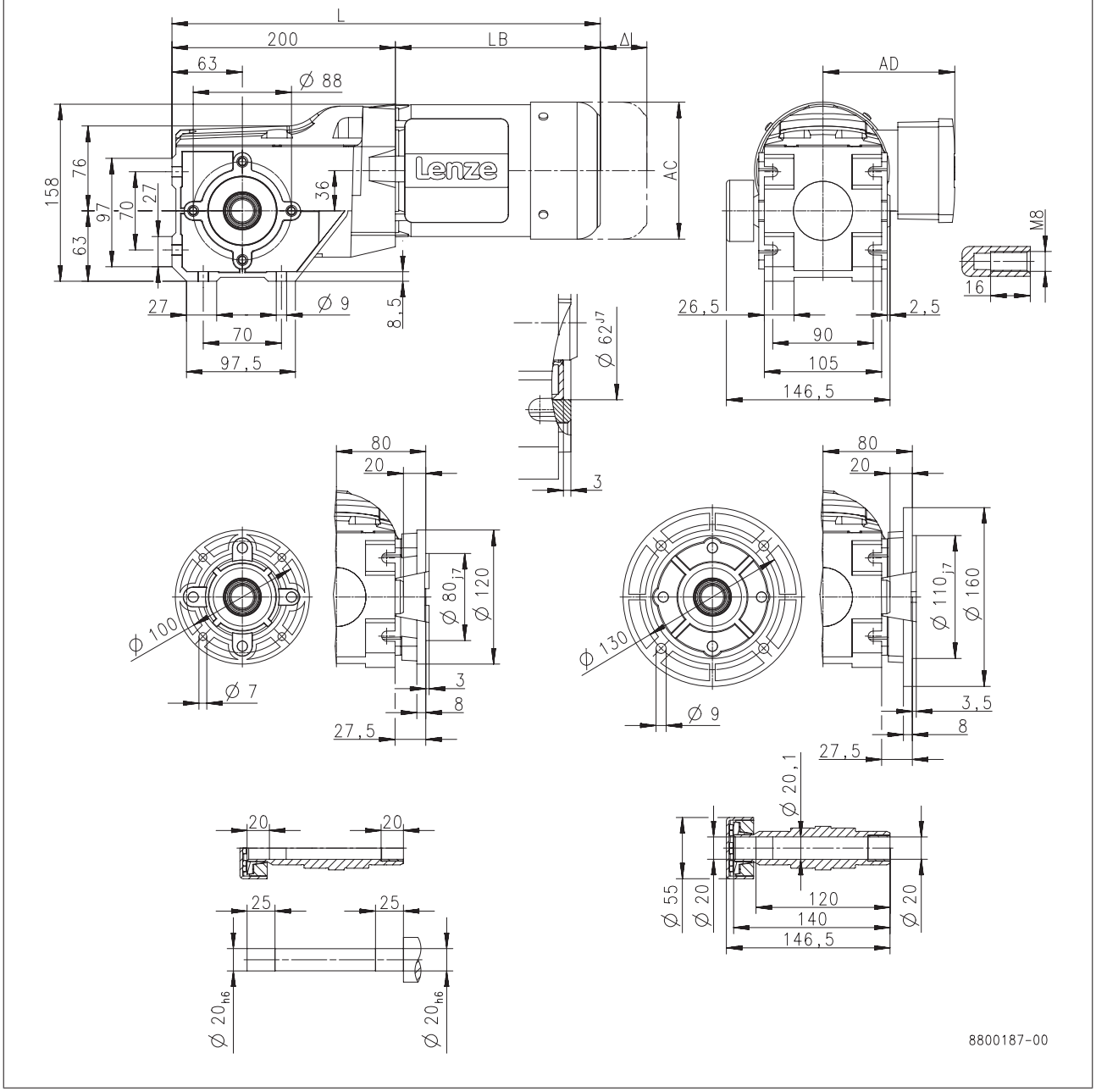

Product			MF□MA□□				
			063-32	063-42	071-32	071-42	080-32
Dimensions							
Total length	**L**	**[mm]**	383		403		426
Motor length	**LB**	**[mm]**	183		203		226
Length of motor options	**Δ L**	**[mm]**	170		165		183
Motor diameter	**AC**	**[mm]**	123		139		156
Distance motor/connection	**AD**	**[mm]**	100		109		150



Dimensions, 4-pole motors

g500-B240

Dimensions with hollow shaft

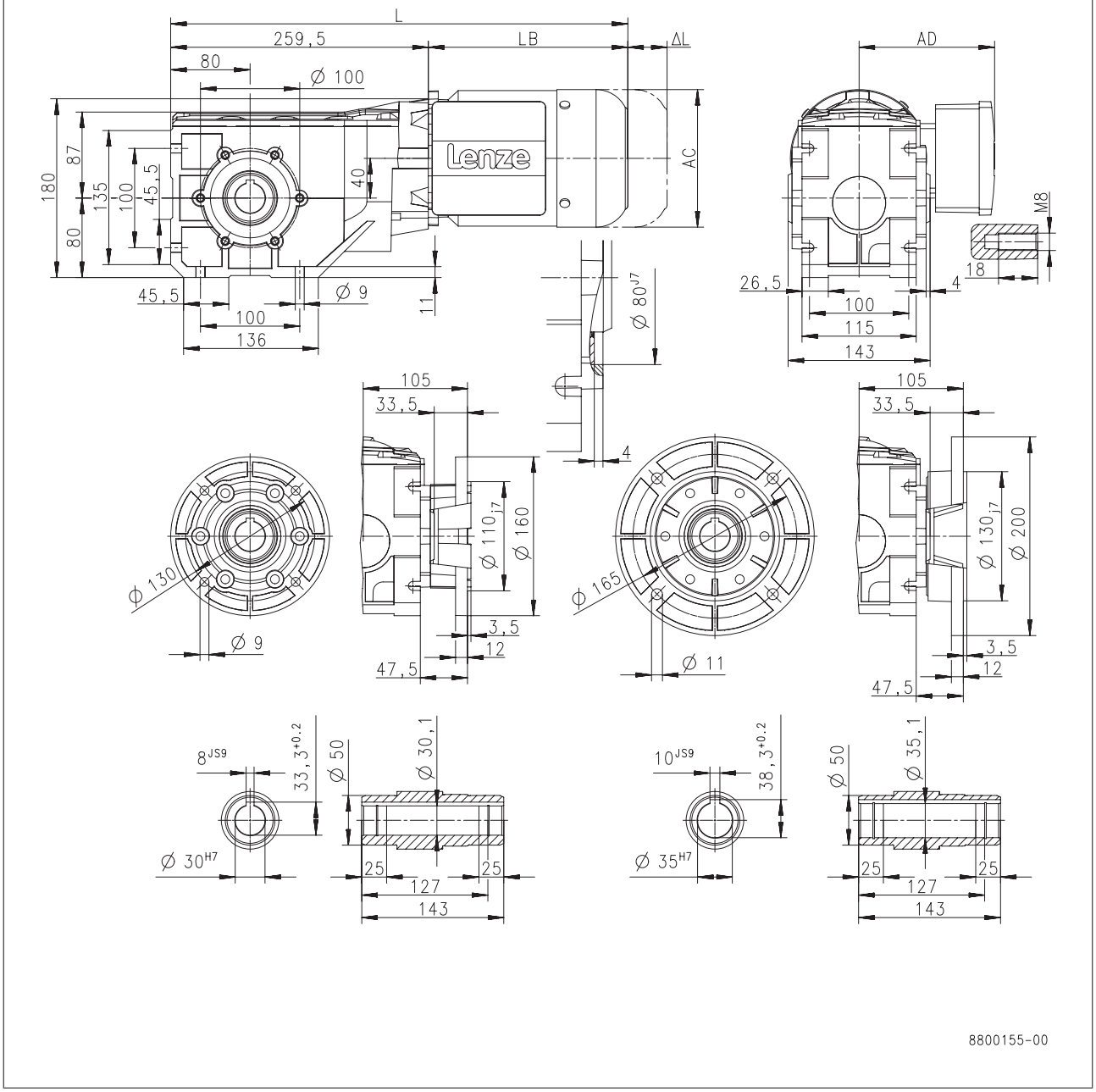

Product			MF□MA□□						
			063-32	063-42	071-32	071-42	080-32	080-42	090-32
Dimensions									
Total length	**L**	**[mm]**	443		463		486		534
Motor length	**LB**	**[mm]**	183		203		226		274
Length of motor options	**Δ L**	**[mm]**	170		165		183		181
Motor diameter	**AC**	**[mm]**	123		139		156		176
Distance motor/connection	**AD**	**[mm]**	100		109		150		157



Dimensions, 4-pole motors

g500-B240

Dimensions with solid shaft

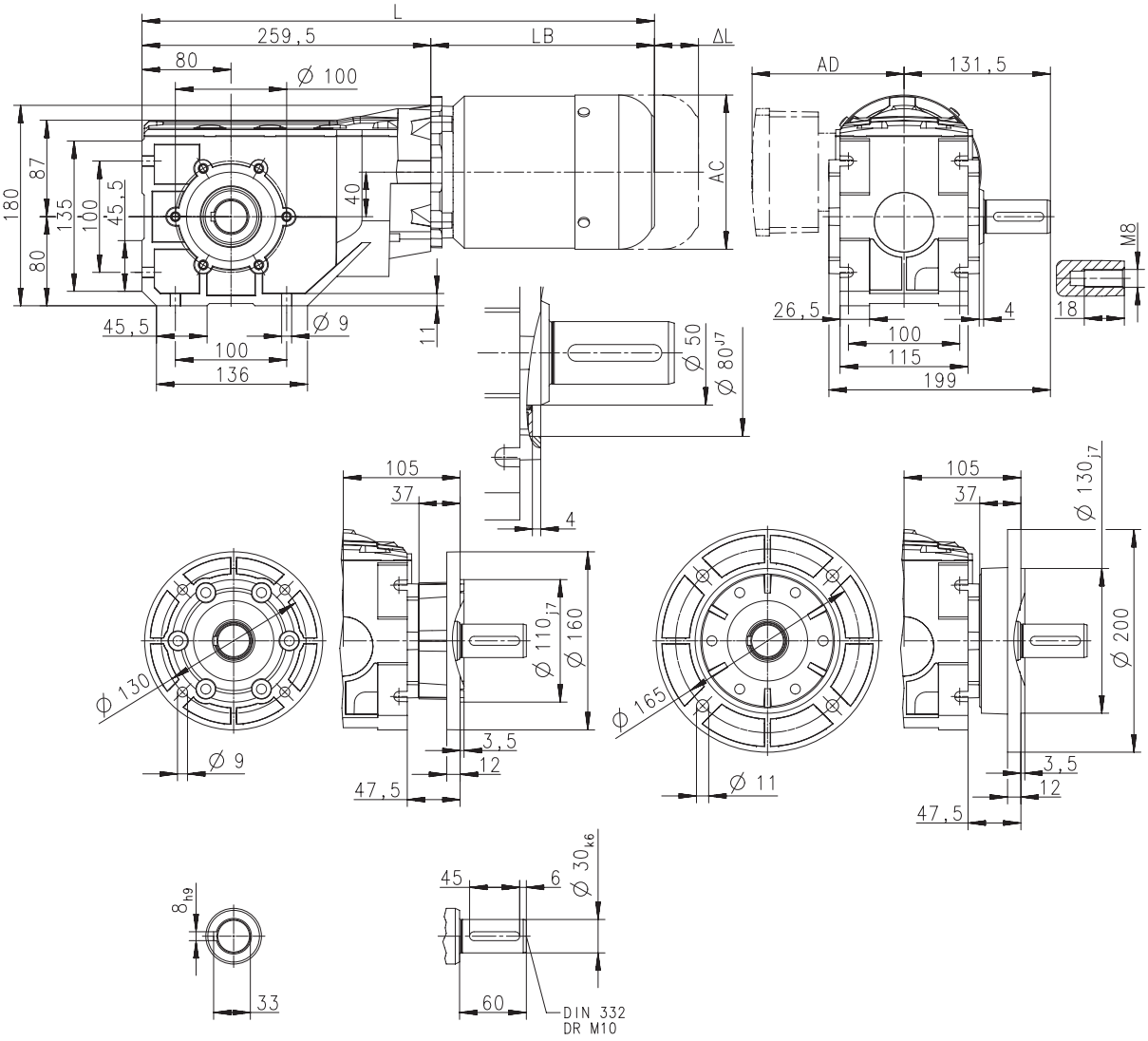

Product			MF□MA□□						
			063-32	063-42	071-32	071-42	080-32	080-42	090-32
Dimensions									
Total length	**L**	**[mm]**	443		463		486		534
Motor length	**LB**	**[mm]**	183		203		226		274
Length of motor options	**Δ L**	**[mm]**	170		165		183		181
Motor diameter	**AC**	**[mm]**	123		139		156		176
Distance motor/connection	**AD**	**[mm]**	100		109		150		157



Dimensions, 4-pole motors

g500-B240

Dimensions with shrink disc

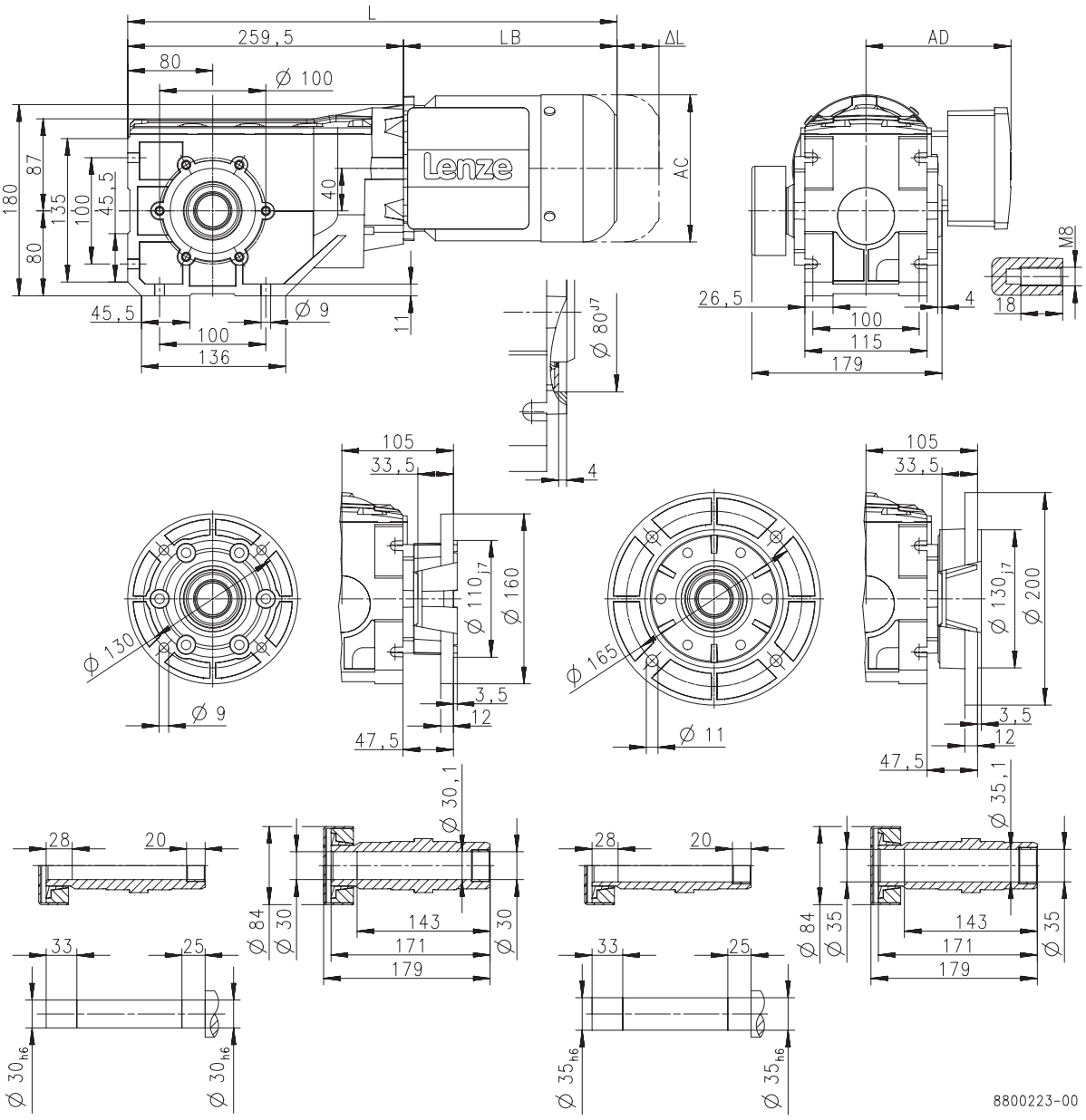

Product			MF□MA□□						
			063-32	063-42	071-32	071-42	080-32	080-42	090-32
Dimensions									
Total length	**L**	**[mm]**	443		463		486		534
Motor length	**LB**	**[mm]**	183		203		226		274
Length of motor options	**Δ L**	**[mm]**	170		165		183		181
Motor diameter	**AC**	**[mm]**	123		139		156		176
Distance motor/connection	**AD**	**[mm]**	100		109		150		157



Dimensions, 4-pole motors

g500-B450

Dimensions with hollow shaft

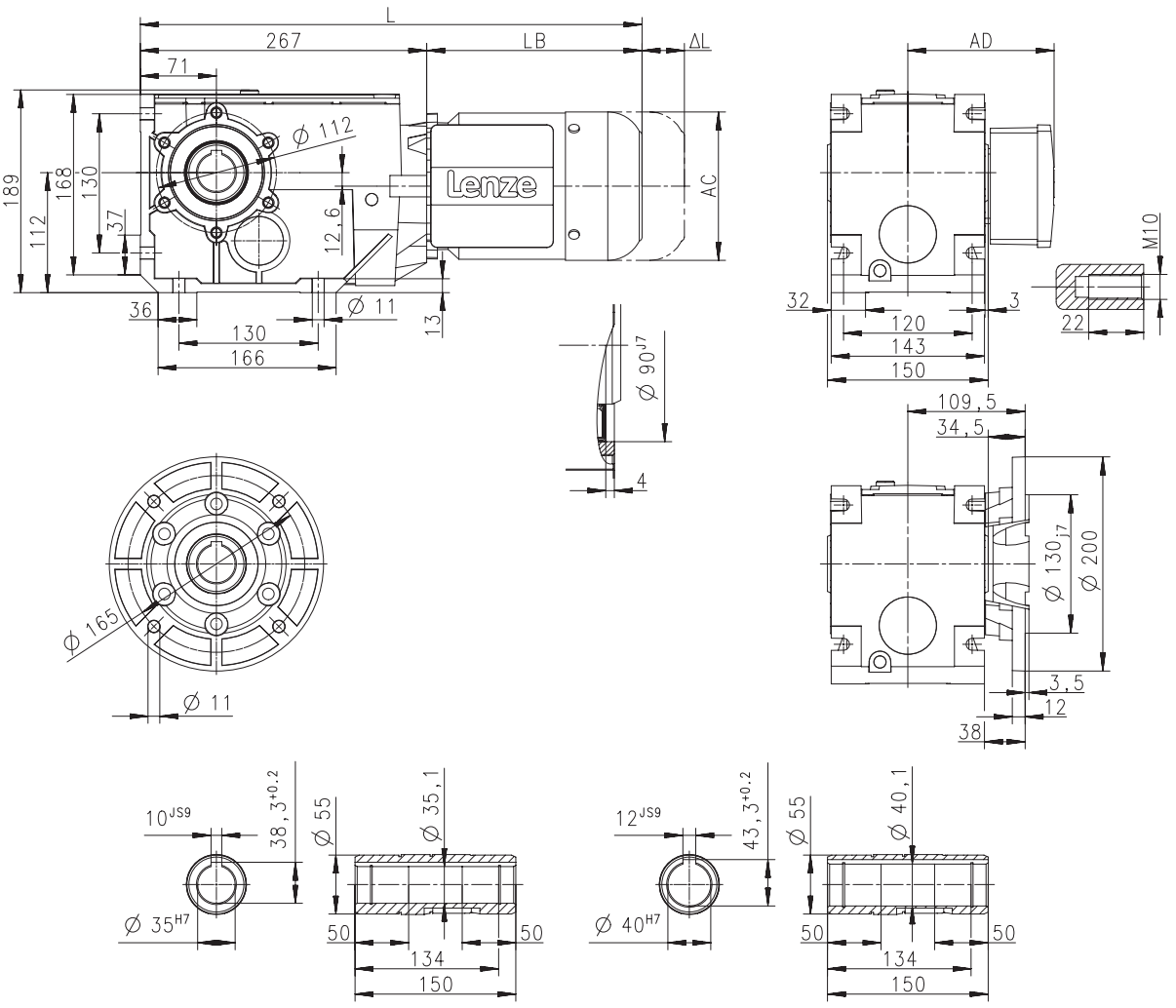

Product			MF□MA□□							
			063-32	063-42	071-32	071-42	080-32	080-42	090-32	100-12
Dimensions										
Total length	**L**	**[mm]**	450		470		493		541	588
Motor length	**LB**	**[mm]**	183		203		226		274	321
Length of motor options	**Δ L**	**[mm]**	170		165		183		181	170
Motor diameter	**AC**	**[mm]**	123		139		156		176	194
Distance motor/connection	**AD**	**[mm]**	100		109		150		157	166



Dimensions, 4-pole motors

g500-B450

Dimensions with solid shaft

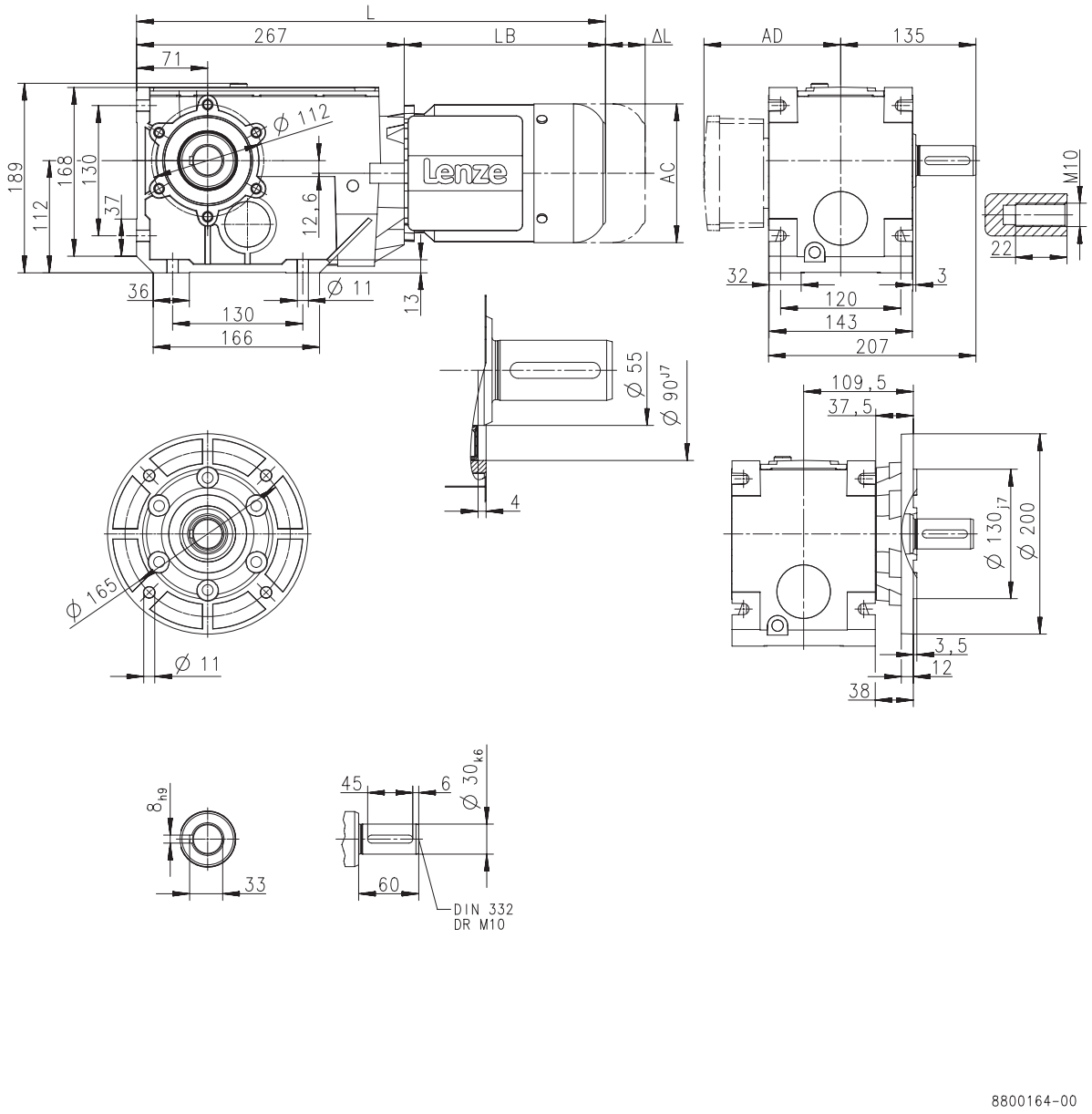

Product			MF□MA□□							
			063-32	063-42	071-32	071-42	080-32	080-42	090-32	100-12
Dimensions										
Total length	**L**	**[mm]**	450		470		493		541	588
Motor length	**LB**	**[mm]**	183		203		226		274	321
Length of motor options	**Δ L**	**[mm]**	170		165		183		181	170
Motor diameter	**AC**	**[mm]**	123		139		156		176	194
Distance motor/connection	**AD**	**[mm]**	100		109		150		157	166



Dimensions, 4-pole motors

g500-B450

Dimensions with shrink disc

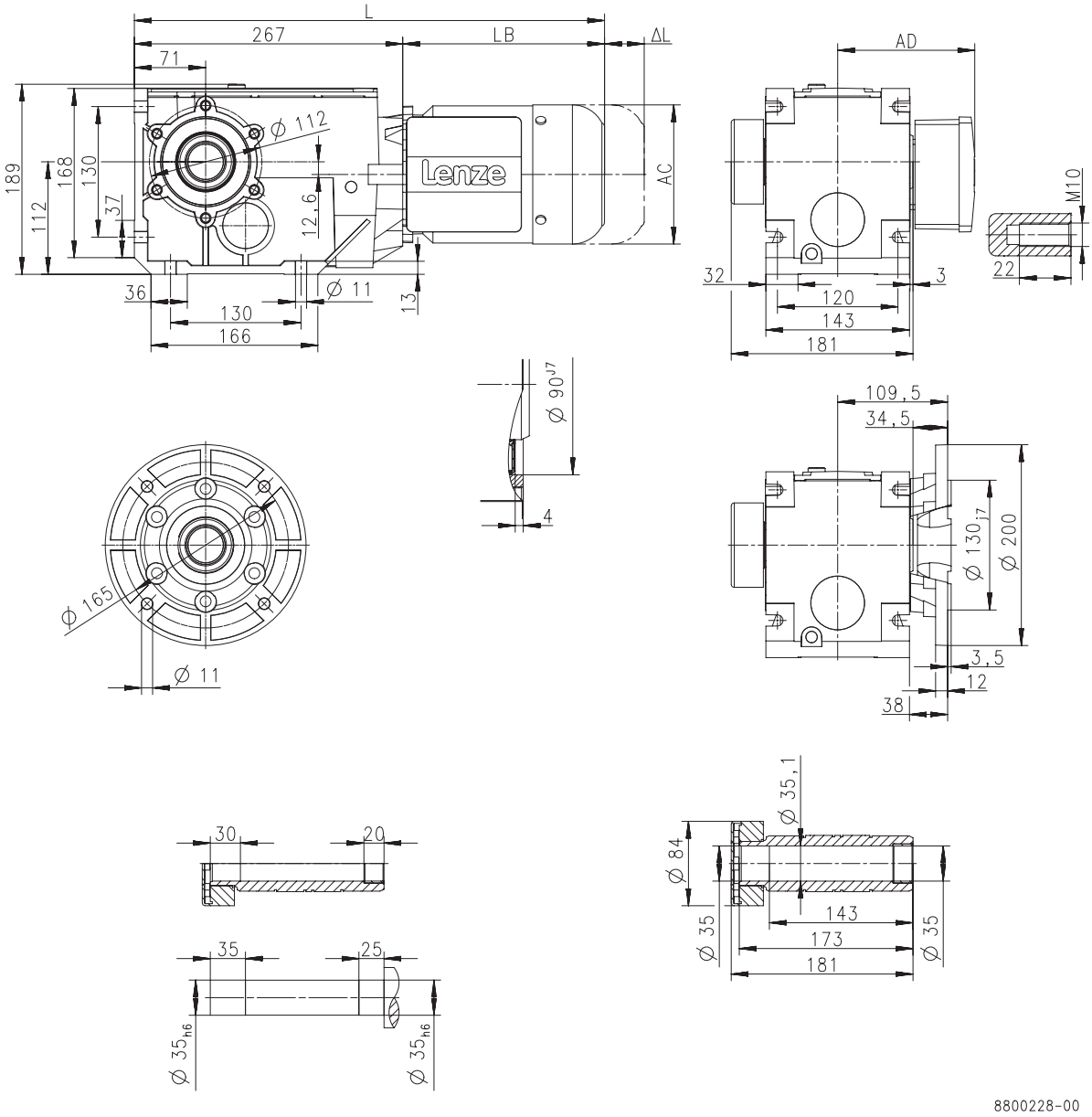

Product			MF□MA□□							
			063-32	063-42	071-32	071-42	080-32	080-42	090-32	100-12
Dimensions										
Total length	**L**	**[mm]**	450		470		493		541	588
Motor length	**LB**	**[mm]**	183		203		226		274	321
Length of motor options	**Δ L**	**[mm]**	170		165		183		181	170
Motor diameter	**AC**	**[mm]**	123		139		156		176	194
Distance motor/connection	**AD**	**[mm]**	100		109		150		157	166



Weights, 4-pole motors

2-stage gearboxes

				MF□MA□□				
				063-32 063-42	071-32 071-42	080-32	080-42	090-32
g500	-B45	m	[kg]	7.3				
	-B110	m	[kg]	8.9	11	15		
	-B240	m	[kg]	13	15	19		26

3-stage gearboxes

				MF□MA□□				
				063-32 063-42	071-32 071-42	080-32 080-42	090-32	100-12
g500	-B240	m	[kg]	13				
	-B450	m	[kg]	16	18	22	29	38



Surface and corrosion protection

For optimum protection of geared motors against ambient conditions, the surface and corrosion protection system (OKS) offers tailor-made solutions.

Various surface coatings combined with other protective measures ensure that the geared motors operate reliably even at high air humidity, in outdoor installations or in the presence of atmospheric impurities. Any colour from the RAL Classic collection can be chosen for the top coat. The geared motors are also available unpainted (no surface and corrosion protection).

Surface and corrosion protection	Applications	Measures
OKS-G (primed)	• Dependent on subsequent top coat applied	• 2K PUR priming coat (grey) • Zinc-coated screws • Rust-free breather elements Optional measures • Stainless steel nameplate
OKS-S (small)	• Standard applications • Internal installation in heated buildings • Air humidity up to 90%	• Surface coating as per corrosivity category C1 (in line with EN 12944-2) • Zinc-coated screws • Rust-free breather elements Optional measures • Stainless steel nameplate
OKS-M (medium)	• Internal installation in non-heated buildings • Covered, protected external installation • Air humidity up to 95%	• Surface coating as per corrosivity category C2 (in line with EN 12944-2) • Zinc-coated screws • Rust-free breather elements Optional measures • Stainless steel shaft • Stainless steel nameplate • Rust-free shrink disc (on request)
OKS-L (large)	• External installation • Air humidity above 95% • Chemical industry plants • Food industry	• Surface coating as per corrosivity category C3 (in line with EN 12944-2) • Blower cover and B end shield additionally primed • Cable glands with gaskets • Corrosion-resistant brake with cover ring, stainless friction plate, and chrome-plated armature plate (on request) • All screws/screw plugs zinc-coated • Stainless breather elements • Threaded holes that are not used are closed by means of plastic plugs Optional measures • Sealed recesses on motor (on request) • Stainless steel shaft • Stainless steel nameplate • Rust-free shrink disc (on request) • Additional priming coat on cast iron fan • Oil expansion tank and torque plates painted separately and supplied loose



Surface and corrosion protection

Structure of surface coating

Surface and corrosion protection	Corrosivity category	Surface coating	Colour
	DIN EN ISO 12944-2	Structure	
Without OKS(uncoated)		Dipping primed gearbox	
OKS-G (primed)		Dipping primed gearbox 2K PUR priming coat	
OKS-S (small)	C1	Dipping primed gearbox 2K-PUR top coat	Standard: RAL 7012 Optional: RAL Classic
OKS-M (medium)	C2	Dipping primed gearbox 2K PUR priming coat 2K-PUR top coat	
OKS-L (large)	C3		





g500-B bevel gearboxes

45 to 450 Nm

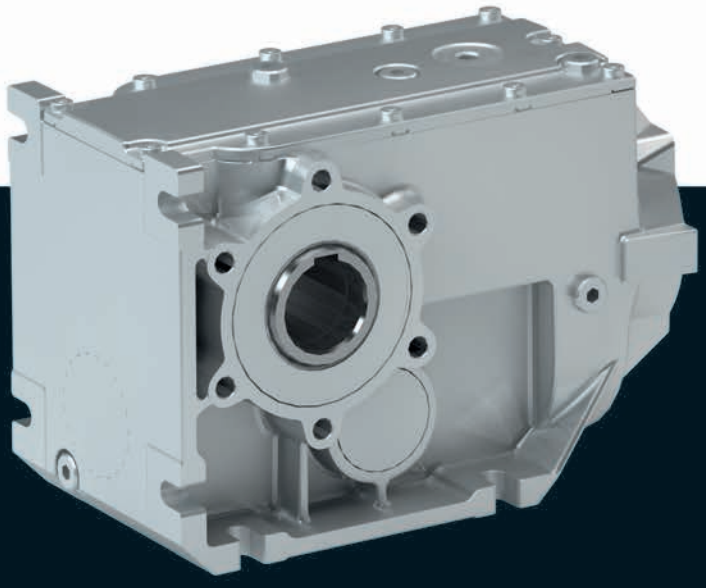

g500-B bevel gearbox

Contents

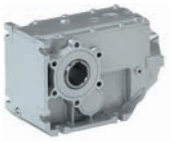

General information	List of abbreviations	6.7 - 5
	Product information	6.7 - 6
	Equipment	6.7 - 7
	The gearbox kit	6.7 - 8
	Functions and features	6.7 - 10
	Lubricants	6.7 - 11
	Ventilation	6.7 - 12
Technical data	Permissible radial and axial forces at output	6.7 - 15
	Moments of inertia	6.7 - 17
	Additional weights for gearboxes	6.7 - 19
Accessories	Torque plate	6.7 - 21
	Shaft cover	6.7 - 26

Contents

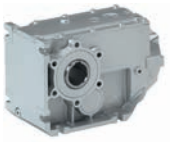

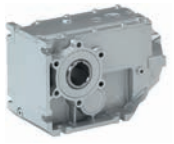

List of abbreviations

$F_{ax,max}$	[N]	Max. axial force
$F_{rad,max}$	[N]	Max. radial force
i		Ratio
J	[kgcm²]	Moment of inertia
m	[kg]	Mass

g500-B bevel gearbox

General information

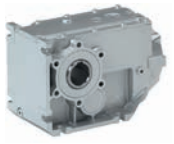

Product information

The efficient bevel gearboxes feature high reliable radial forces, closely stepped gear reductions and a low backlash. They are available in 2-pole and 3-pole design with a torque up to 450 Nm and a ratio of up to i= 360.

Versions

- High-efficient right-angle gearbox in a compact design for space-saving installation
- Standardised shaft and flange dimensions for an easy machine integration
- Low backlash and high torsional stiffness provide for exact results in positioning applications

The product name

Gearbox type	Product range		Design	Rated torque [Nm]	Product
Bevel gearbox	g500	-	B	45	g500-B45
				110	g500-B110
				240	g500-B240
				450	g500-B450

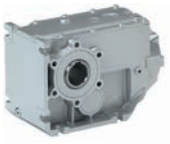

Equipment

Overview

The equipment includes all the options available as standard and all the built-on accessories of the product.

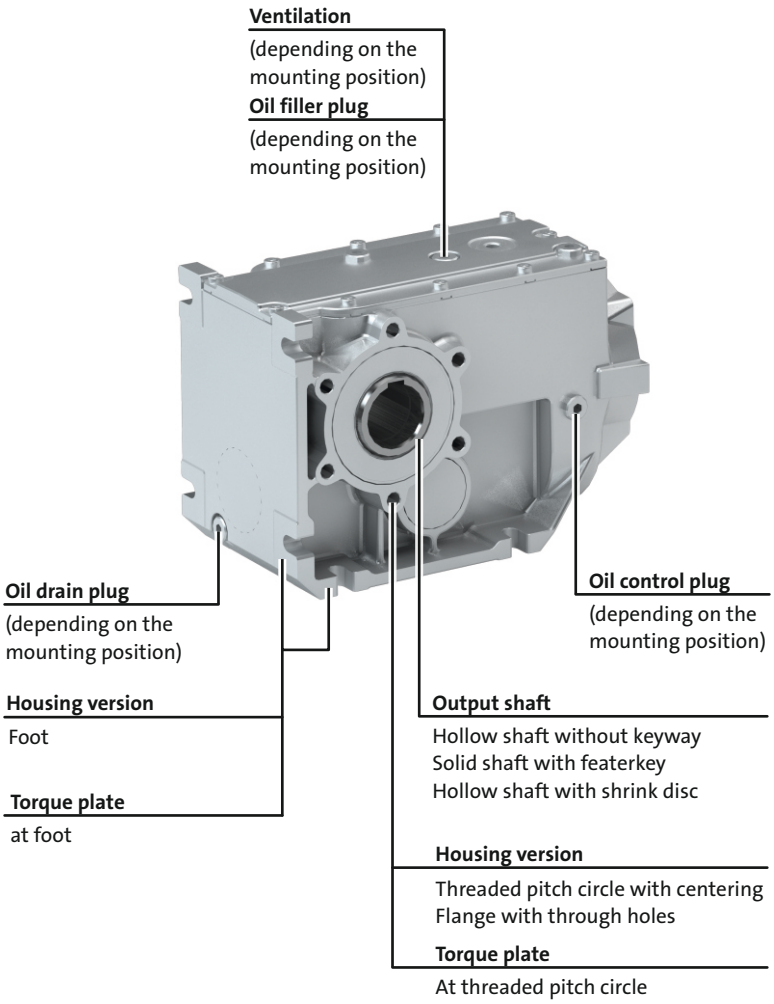

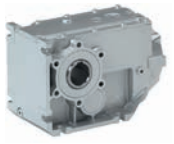

The gearbox kit

Gearbox details

Product	g500-B45	g500-B110	g500-B240	g500-B450
Driven shaft				
Solid shaft without keyway [mm]				
Solid shaft with featherkey [mm]	20x40		30x60	
Hollow shaft with keyway [mm]	18/20	20/25	30/35	35/40
Hollow shaft with shrink disc [mm]	20		30/35	35
Design	Standard stainless steel			
Gasket	Standard FPM (Viton)			
Bearing	Standard			
Fitting grease	Not enclosed Enclosed			
Housing				
Housing version	With foot With foot and centering			
Output flange				
flange diameter [mm]	110/120	120/160	160/200	200
Lubricant				
Type	CLP 460 [1)] CLP HC 320 CLP HC 220 CLP HC 220 USDA H1			
Oil-level inspection	Without inspection			Without inspection With inspection
Breather element	Without			Standard mounting position: Mounted Combined mounting position: loosely enclosed
Backlash				
Backlash	Standard			
Accessories				
Torque plate	Rubber buffers At threaded pitch circle	At threaded pitch circle	At threaded pitch circle At foot	At foot
Shaft cover	Hollow shaft Shrink disc: Rotating cover Shrink disc: Fixed cover			

6.7

[1)] Not suitable for geared servo motors.

► Further information and installation feasibilities can be found in the Gearboxes chapter.



The gearbox kit

Gearbox details

Solid shaft



Foot mounting
without centring



Foot mounting
With centering



Flange with through holes

Hollow shaft



Foot mounting
without centring



Foot mounting
With centering



Flange with through holes

Hollow shaft with shrink disc



Foot mounting
without centring



Foot mounting
With centering

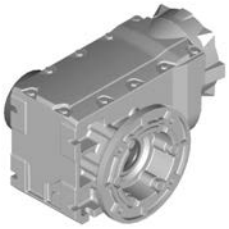

Flange with through holes

Accessories



2nd output shaft end



Torque plate
at foot



Torque plate
at threaded pitch circle

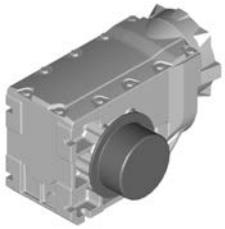

Cover
Hollow shaft/shrink disc

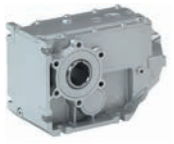

Functions and features

Product	g500-B45	g500-B110	g500-B240	g500-B450
Housing				
Design	Cuboid			
Material	Aluminium			
Solid shaft				
Design	with keyway to DIN 6885			
Tolerance	Shaft diameter ≤ 50 mm: k6 Shaft diameter > 50 mm: m6			
Material	Tempered steel C45 Nirosta X46Cr13			
Hollow shaft				
Design	With keyway Without keyway (for shrink disc)			
Tolerance	Bore H7			
Material	Tempered steel C45 Nirosta X46Cr13			
Toothed parts				
Design	Ground tooth flanks Optimised tooth flank geometry			
Material	Case-hardened steel			
Shaft-hub joint				
	1st and 2nd step: Force-fit 3rd step: positive-fit			
Shaft sealing rings				
Design	With dust lip			
Material	NB / FP			
Bearing				
Design	Ball bearing / tapered-roller bearing depending on size and design			
Lubricants				
	Standard: mineral oil Optional: synthetic oil [1]			
Quantities	Corresponding to mounting position (see nameplate)			
Mechanical efficiency				
2-stage gearboxes [$\eta_{c=1}$]	0.96			
3-stage gearboxes [$\eta_{c=1}$]			0.95	

[1] Standard for geared servo motors.

Direction of rotation

2-stage gearboxes B45 ... B240 3-stage gearbox B450	3-stage gearbox B240
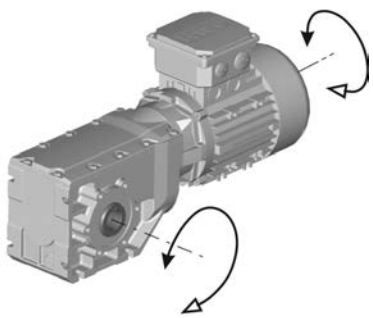	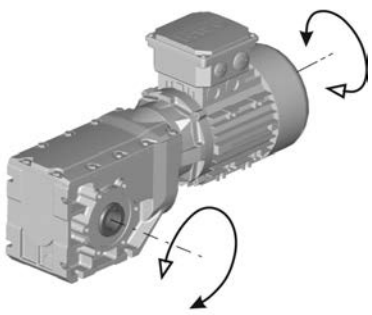

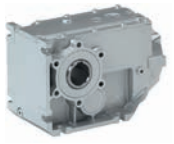

Lubricants

Lenze gearboxes and geared motors are ready for operation on delivery and are filled with lubricants specific to both the drive and the design. The mounting position and design specified in the order are key factors in choosing the volume of lubricant.

The lubricants listed in the lubricant table are approved for use in Lenze drives.

Lubricant table

Mode	CLP 460	CLP HC 320	CLP HC 220 USDA H1
Ambient temperature [°C]	0 ... +40	-25 ... +50	-20 ... +40
Specification	Mineral based oil with additives	Synthetic-based oil (synthetic hydrocarbon / poly-alpha-olefin oil)	
Changing interval	16000 operating hours not later than after three years (oil temperature 70 to 80 °C)	25000 operating hours not later than after three years (oil temperature 70 to 80 °C)	16000 operating hours not later than after three years (oil temperature 70 to 80 °C)
Fuchs	Fuchs Renolin CLP 460	Fuchs Renolin Unisyn CLP 320	bremer & leguil Cassida Fluid GL 220
Klüber	Klüberoil GEM1-460 N	Klübersynth GEM4-320 N	Klüberoil 4 UH1-220 N
Shell	Shell Omala S2 G 460	Shell Omala S4 GX HD 320	

► Please contact your Lenze sales office if you are operating at ambient temperatures in areas up to< -20 °C bzw. > or up to +40°C.

Shaft sealing rings

By default, the gearboxes come with NBR shaft sealing rings at the output end. At high speed and unfavourable ambient conditions as high temperature, reduced circulation of air etc., Lenze recommends the use of Viton shaft sealing rings.

Please consider this in your order.



Ventilation

Non-ventilated gearboxes

No ventilation is required for gearboxes g500-B45 to B240.

Ventilated gearboxes

The g500-B450 gearbox is supplied with a breather element as standard.

Gearboxes in combined mounting position

To reduce the number of different versions, the gearboxes can also be ordered with combined mounting positions.
Depending on the gearbox in question, the following combinations are available:
- g500-B45 in combined mounting position ABCDEF
- g500-B110 ... B450 in combined mounting position AEF

The breather elements are supplied loose.



Ventilation

g500-B240

► **A ... F** mounting position

A	B
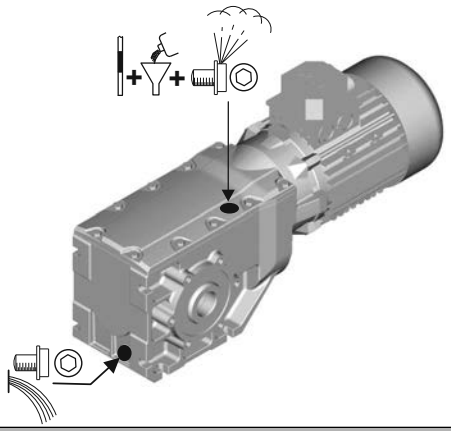	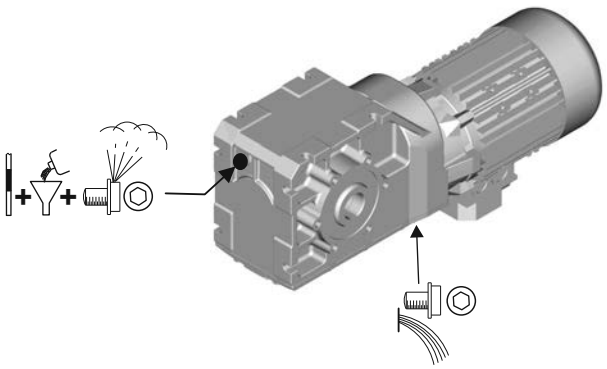
C	**D**
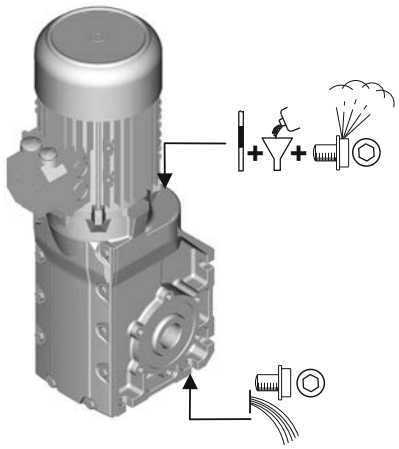	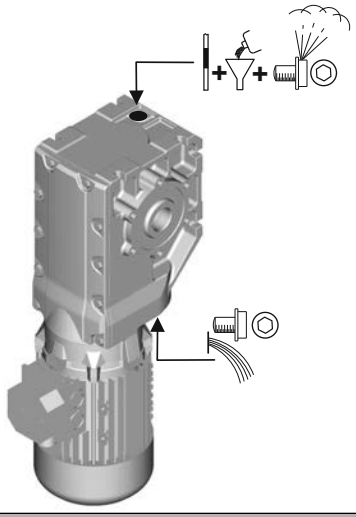
E	**F**
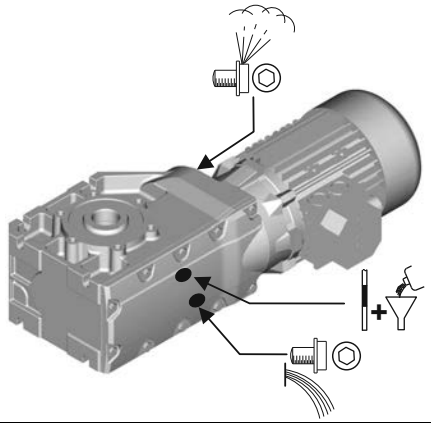	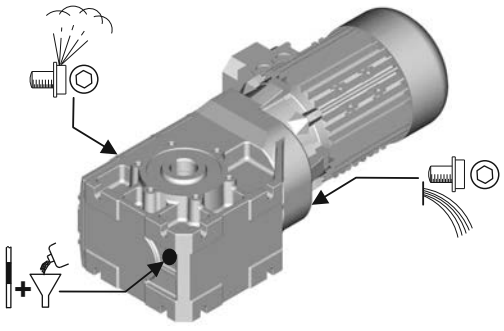

	Filler		Drain
	Breather element		Check



Ventilation

g500-B450

► **A ... F** mounting position

A	B
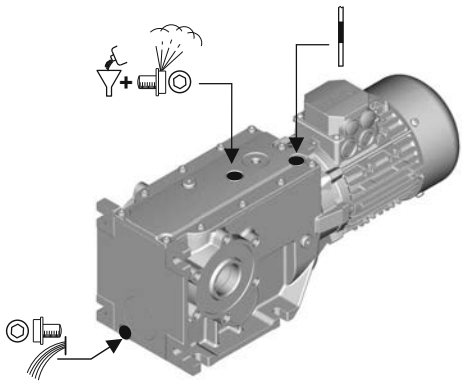	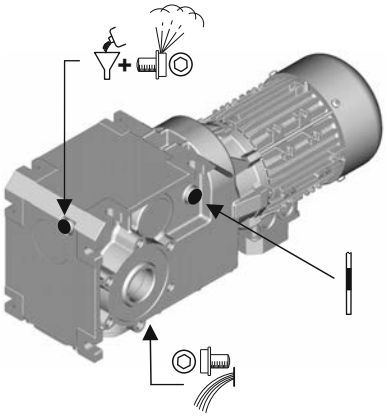
C	**D**
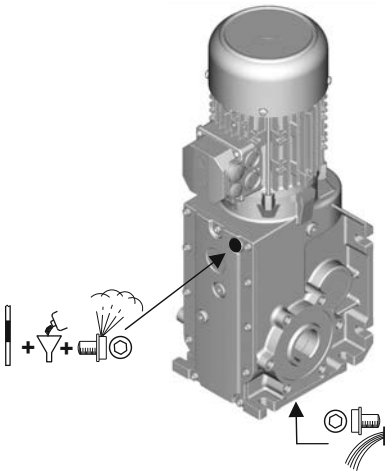	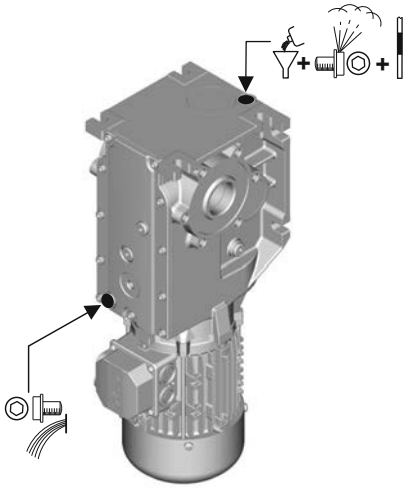
E	**F**
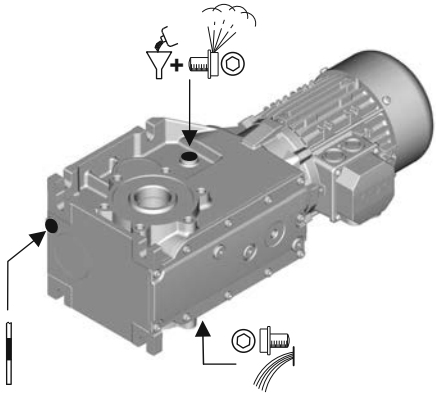	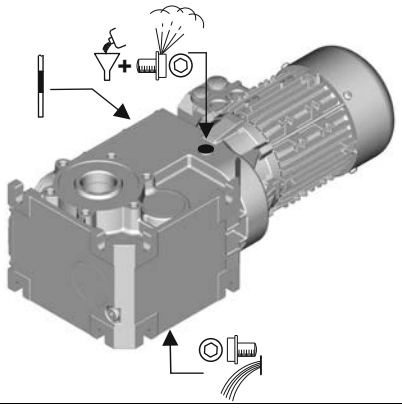

	Filler		Drain
	Breather element		Check

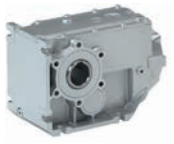

Permissible radial and axial forces at output

Permissible radial force

$F_{rad,perm} = f_w \times F_{rad,max}$

Permissible axial force

If there is no radial force, the maximum permissible axial force is 50 % of the table value $F_{rad,max}$

► If F_{rad} **and** $F_{ax} \neq 0$, please contact Lenze.

Application of forces

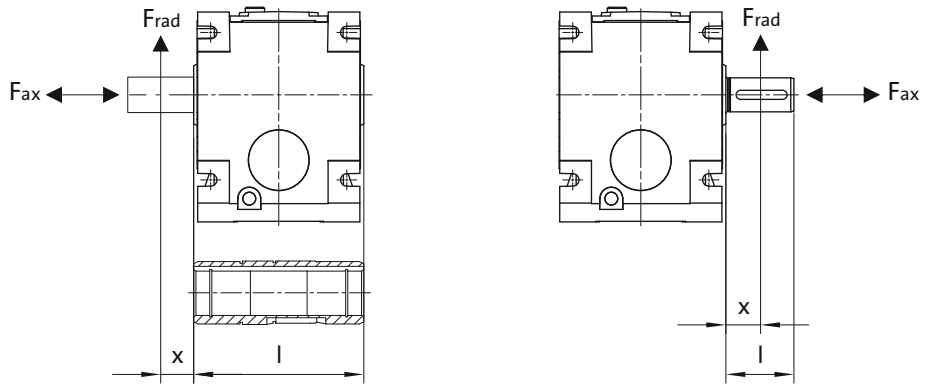

Additional load factor f_w at output shaft

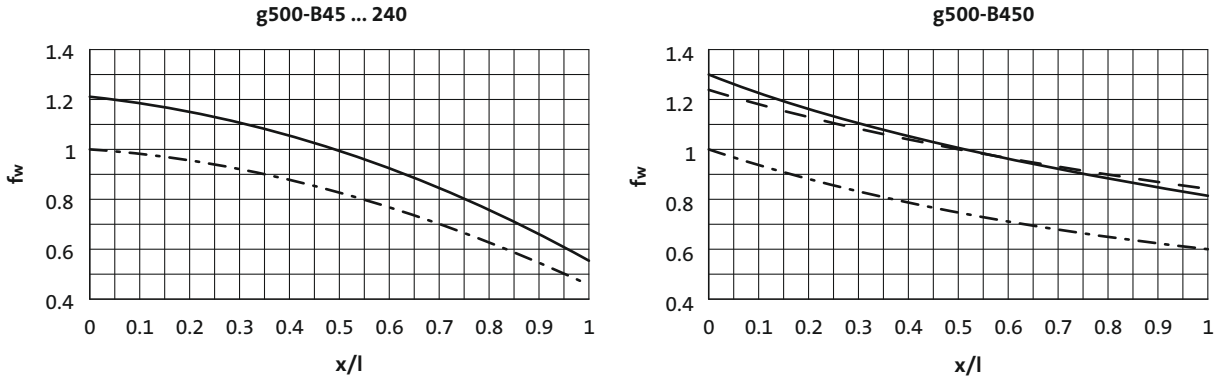

——— Solid shaft
— — — Solid shaft with flange
— · — Hollow shaft

6.7

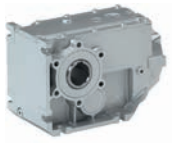

Permissible radial and axial forces at output

The values given in the table refer to the center shaft end force application point and are minimum values calculated according to the most unfavourable conditions (force application angle, mounting position, direction of rotation). The values were calculated for the motor/gearbox combination with a load capacity of c= 1.3 and an input speed of 1400 rpm.

- ► If the torque is transmitted via the flange face, max 50 % of the radial force $F_{rad,max}$ are permissible.
- ► Neither radial nor axial forces are permissible for the hollow shaft with shrink disc.

In case of different operating conditions, considerably higher forces can be transmitted. Please contact Lenze.

Product	n_2 [r/min]									
	1000	630	400	250	160	100	63	40	25	≤16

	Max. radial force, Hollow shaft									
	$F_{rad,max}$	$F_{rad,max}$	$F_{rad,max}$	$F_{rad,max}$	$F_{rad,max}$	$F_{rad,max}$	$F_{rad,max}$	$F_{rad,max}$	$F_{rad,max}$	$F_{rad,max}$
	[N]	[N]	[N]	[N]	[N]	[N]	[N]	[N]	[N]	[N]
g500-B45	900	1200	2200	2500	2800	3000	3000	3000	3000	3000
g500-B110	1000	2200	2550	3000	3300	3600	3600	3600	3600	3600
g500-B240	1500	2250	3800	4500	5100	6200	7400	7800	7800	7800
g500-B450	3000	3800	5000	5200	5200	5500	7000	9000	9000	9000

	Max. radial force, Solid shaft without flange									
	$F_{rad,max}$	$F_{rad,max}$	$F_{rad,max}$	$F_{rad,max}$	$F_{rad,max}$	$F_{rad,max}$	$F_{rad,max}$	$F_{rad,max}$	$F_{rad,max}$	$F_{rad,max}$
	[N]	[N]	[N]	[N]	[N]	[N]	[N]	[N]	[N]	[N]
g500-B45	900	1200	1800	2100	2400	2800	3000	3000	3000	3000
g500-B110	1000	1800	2100	2500	2700	3000	3000	3000	3000	3000
g500-B240	1500	2350	3000	3600	4500	5000	6000	6500	6500	6500
g500-B450	1800	2800	3600	4200	5100	6000	7200	7800	7800	7800

	Max. radial force, Solid shaft with flange									
	$F_{rad,max}$	$F_{rad,max}$	$F_{rad,max}$	$F_{rad,max}$	$F_{rad,max}$	$F_{rad,max}$	$F_{rad,max}$	$F_{rad,max}$	$F_{rad,max}$	$F_{rad,max}$
	[N]	[N]	[N]	[N]	[N]	[N]	[N]	[N]	[N]	[N]
g500-B45	900	1200	1800	2100	2400	2800	3000	3000	3000	3000
g500-B110	1000	1800	2100	2500	2700	3000	3000	3000	3000	3000
g500-B240	2400	3600	5200	6000	6500	6500	6500	6500	6500	6500
g500-B450	3000	4000	5500	6200	7000	7500	7800	7800	7800	7800

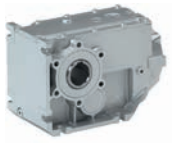

Moments of inertia

- The moments of inertia relate to the drive shaft of the gearbox.
- The total moment of inertia is calculated by adding the values of the gearbox, motor and accessories.

2-stage gearboxes

Product	Ratio	Moment of inertia
	i	J
		[kgcm²]
g500-B45	5.411	0.31
	6.222	0.28
	7.111	0.20
	8.178	0.18
	9.101	0.13
	10.466	0.12
	11.640	0.086
	13.386	0.079
	15.111	0.059
	17.378	0.055
	19.365	0.038
	22.270	0.054
	25.051	0.025
	28.808	0.023
	32.593	0.016
	37.481	0.015
	42.222	0.010
	48.556	0.009
	53.889	0.006
	61.972	0.006
g500-B110	5.185	0.79
	5.963	0.70
	7.111	0.48
	8.178	0.43
	9.101	0.32
	10.466	0.29
	11.449	0.26
	12.698	0.19
	14.603	0.18
	15.556	0.14
	17.889	0.13
	19.556	0.095
	22.489	0.088
	25.185	0.063
	28.963	0.060
	31.919	0.041
	36.707	0.039
	37.400	0.072
	40.000	0.028
	46.000	0.027
	48.167	0.050
	52.698	0.017
	60.603	0.016
	61.045	0.033
	76.500	0.023
	100.786	0.014

Product	Ratio	Moment of inertia
	i	J
		[kgcm²]
g500-B240	3.565	2.97
	4.889	1.74
	6.257	1.15
	6.883	1.67
	7.817	1.51
	9.440	1.05
	10.720	0.97
	12.081	0.73
	13.719	0.68
	15.008	0.59
	16.857	0.45
	19.143	0.42
	20.650	0.34
	23.450	0.32
	26.878	0.21
	30.522	0.20
	33.433	0.15
	37.967	0.15
	43.267	0.096
	49.133	0.092
	52.510	0.070
	59.630	0.067
	67.113	0.045
	76.213	0.043

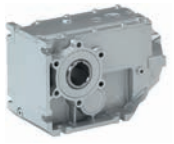

Moments of inertia

3-stage gearboxes

Product	Ratio	Moment of inertia
	i	J
		[kgcm²]
g500-B240	68.459	0.093
	77.741	0.091
	87.563	0.062
	99.437	0.061
	113.673	0.044
	129.087	0.043
	145.674	0.030
	165.426	0.030
	188.442	0.021
	213.994	0.020
	245.178	0.014
	278.422	0.014
	317.617	0.003
	360.683	0.003

Product	Ratio	Moment of inertia
	i	J
		[kgcm²]
g500-B450	5.002	4.36
	6.860	2.48
	9.315	3.21
	10.328	3.06
	12.775	1.87
	14.165	1.79
	16.349	1.23
	17.885	1.05
	19.831	1.01
	22.813	0.70
	25.294	0.68
	27.945	0.51
	30.985	0.49
	36.373	0.31
	40.330	0.30
	45.245	0.22
	50.167	0.21
	56.154	0.47
	62.262	0.47
	68.788	0.36
	76.271	0.36
	89.534	0.22
	99.274	0.22
	111.372	0.16
	123.487	0.16
	144.128	0.10
	159.807	0.099
	174.919	0.073
	193.948	0.072
	223.563	0.046
	247.882	0.046

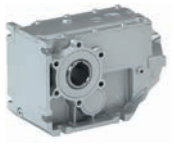

Additional weights for gearboxes

Product			g500-B45	g500-B110	g500-B240	g500-B450
Mass						
Solid shaft	m	[kg]	0.4	0.5	1.4	1.3
Shrink disc	m	[kg]	0.2	0.2	0.7	0.6
Flange	m	[kg]	0.3	0.4	0.7	0.9

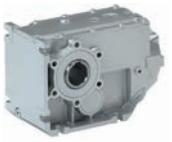

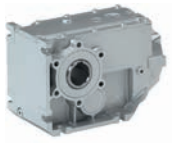

Torque plate

Torque support is usually effected by means of the foot or flange. Another simple possibility is provided by the attachable torque plates. Here, torque support is implemented solely via one point, which, among other things, is suitable for shaft-mounted gearboxes. Supplied rubber buffers provide for mounting with minimum stress and absorb light shocks.
The torque plates are available in two designs, for mounting on the available threaded pitch circle, or for the gearbox foot.

In addition, torque support for the g500-B45 gearbox can be effected via the holding fixture of the housing, which is integrated on both sides, by means of a rubber buffer.
The rubber buffers can be ordered optionally.



Torque plate

Torque plate on threaded pitch circle

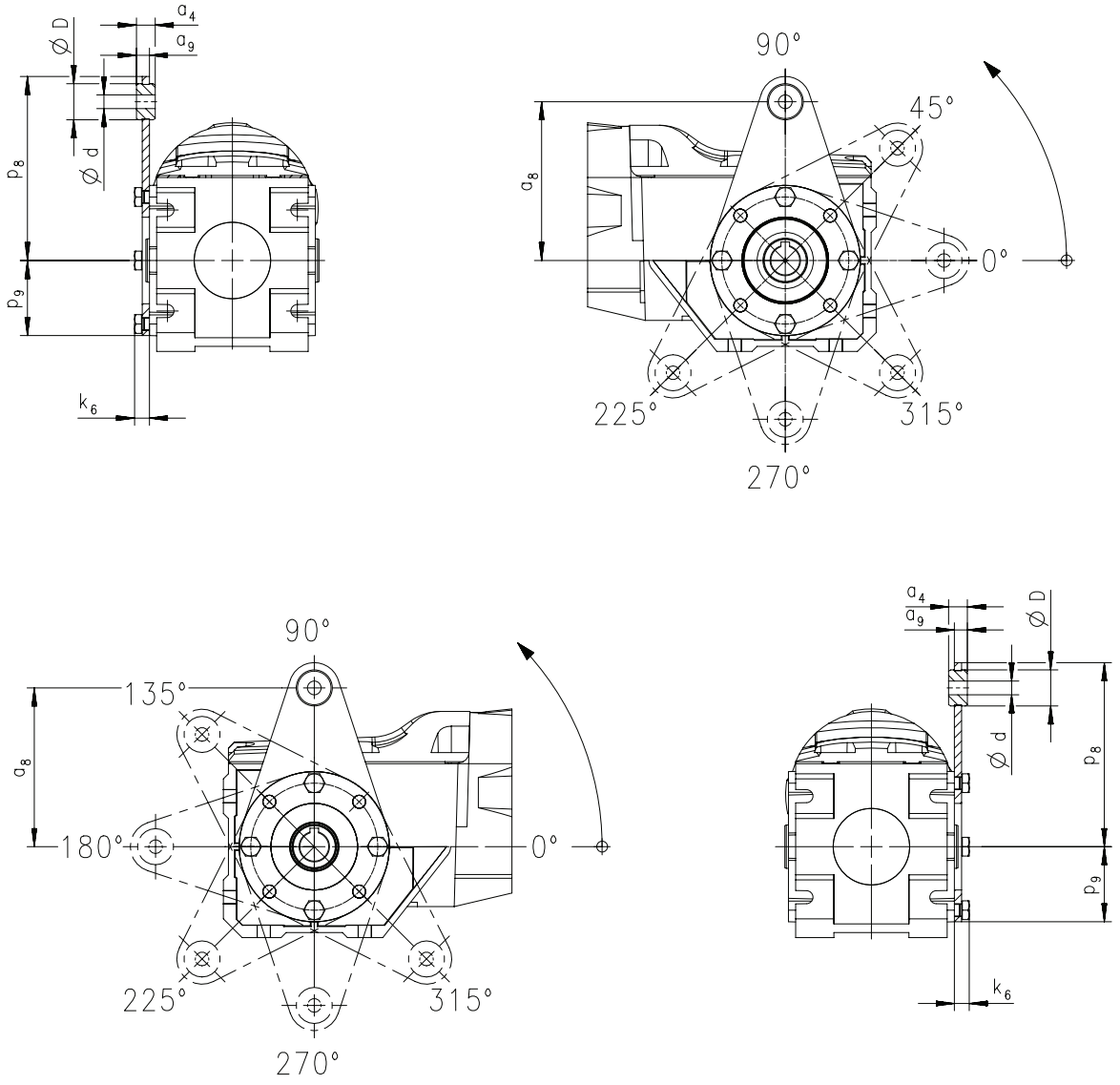

Product	Dimensions								Mass
	a_4	a_8	a_9	d	D	p_8	p_9	k_6	m
	[mm]	[mm]	[mm]	[mm]	[mm]	[mm]	[mm]	[mm]	[kg]
g500-B45	12.0	100	8.0	8.0	20.0	115	42.0	9.0	0.30
g500-B110	13.0	110	9.0	10.0	25.0	128	54.0	11.0	0.50



Torque plate

Torque plate on threaded pitch circle

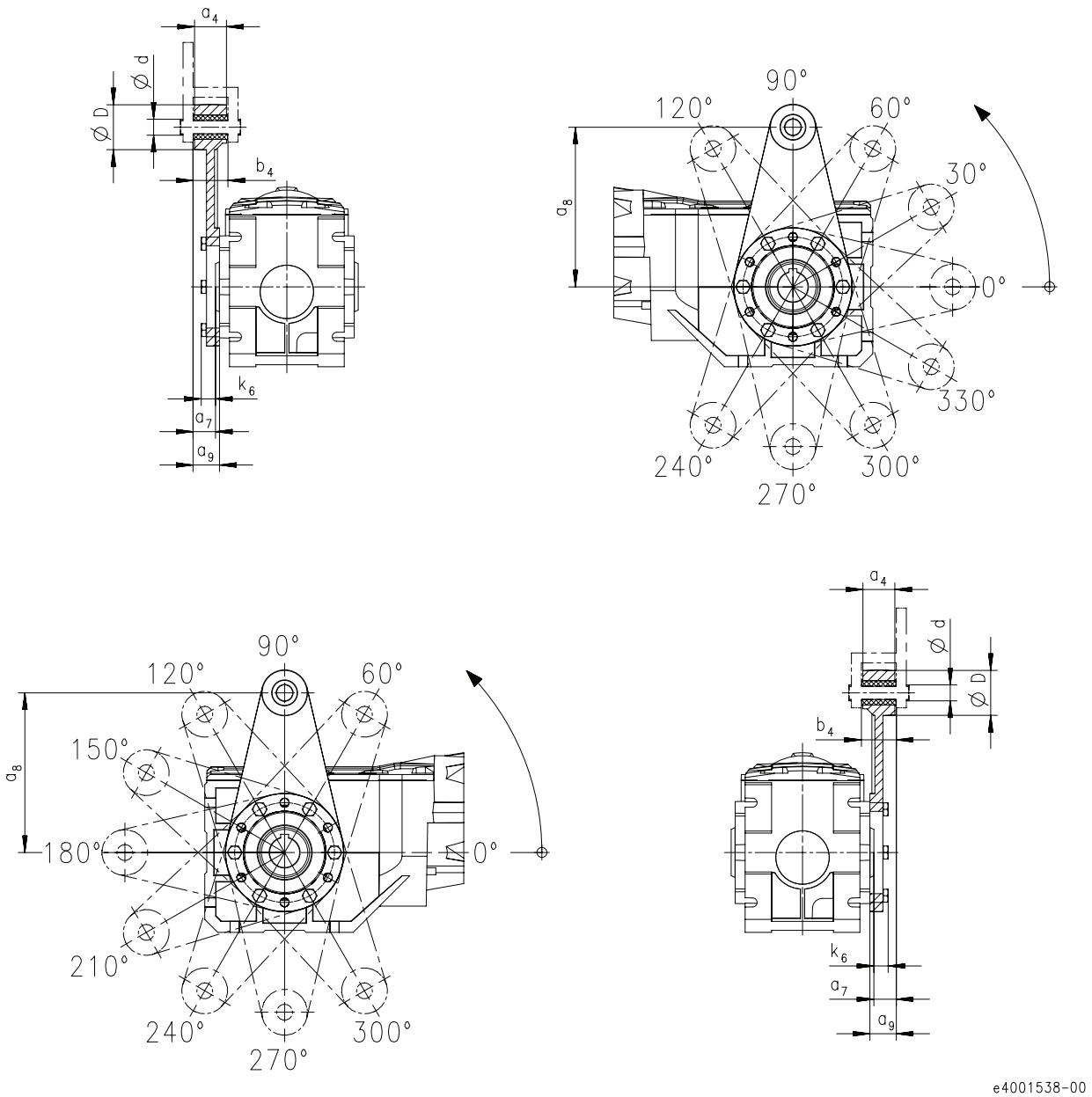

Product	Dimensions								Mass
	a_4	a_7	a_8	a_9	b_4	d	D	k_6	m
	[mm]	[mm]	[mm]	[mm]	[mm]	[mm]	[mm]	[mm]	[kg]
- g500-B240	34.0	23.5	160	27.5	38.5	16.0	45.0	15.0	1.30



Torque plate

Torque plate at housing foot

g500-B240

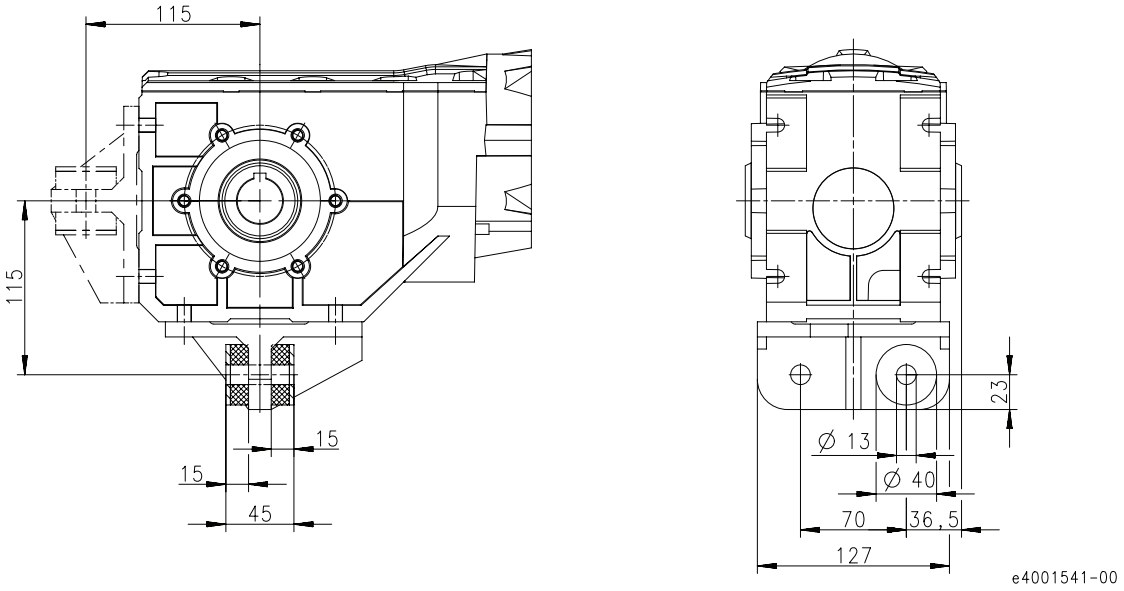

g500-B450

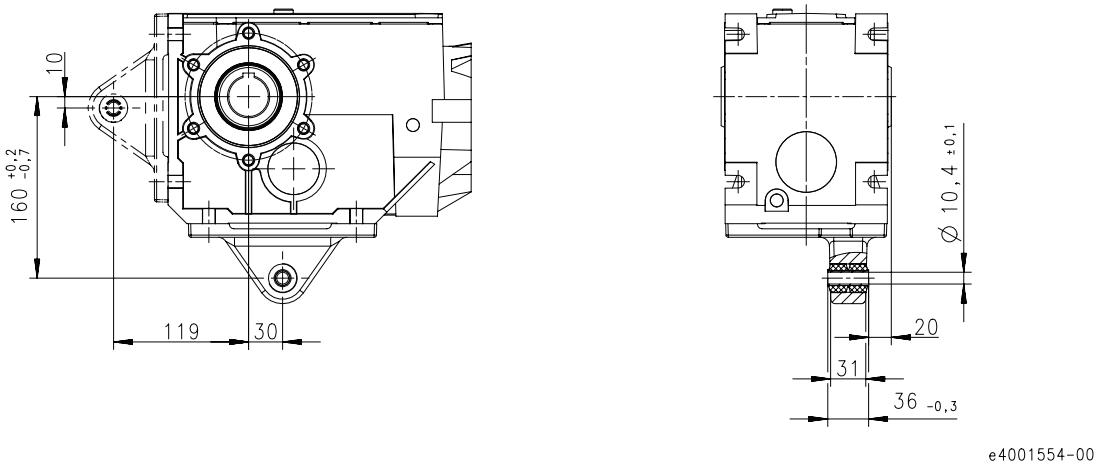

Product	Mass
	m
	[kg]
g500-B240	2.40
g500-B450	1.10



Torque plate

Rubber buffer for torque plate

g500-B45

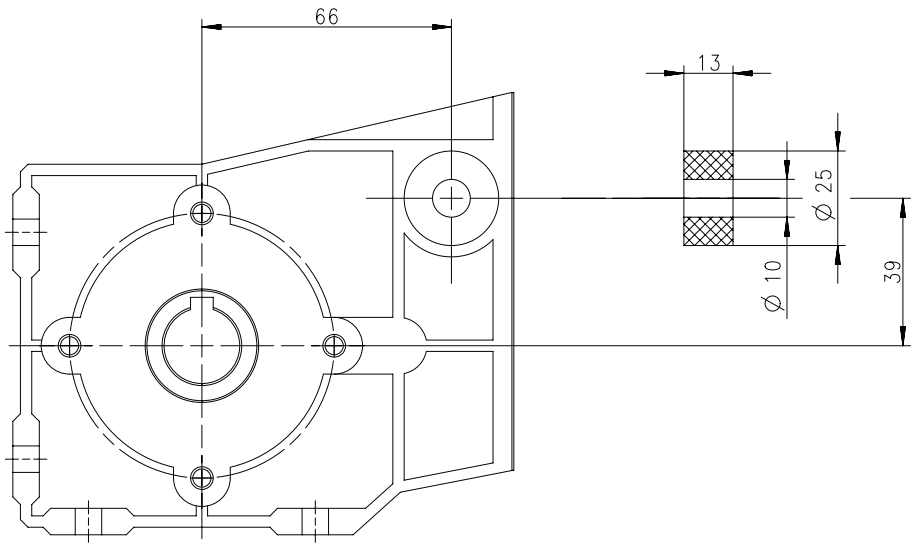



Shaft cover

Hoseproof hollow shaft cover

The cover protects the hollow shaft from objects falling in. It is sealed by a flat gasket between cover and housing. Thus, the hollow shaft is protected from dust and water jets.

The cover is loosely enclosed and can be mounted on both sides of the hollow shaft bore.

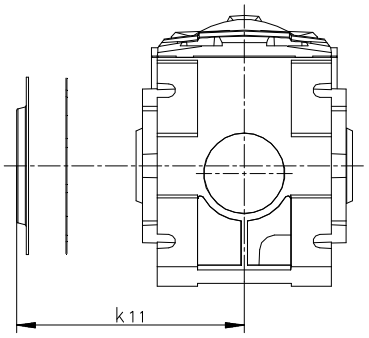

6.7

Product	Dimensions	Mass
	k_{11}	m
	[mm]	[kg]
g500-B45	55.0	0.050
g500-B110	65.0	0.050
g500-B240	75.0	0.10
g500-B450	79.5	0.15



Shaft cover

Shrink disc cover

The cover is provided for the shrink disc to be protected from contact.

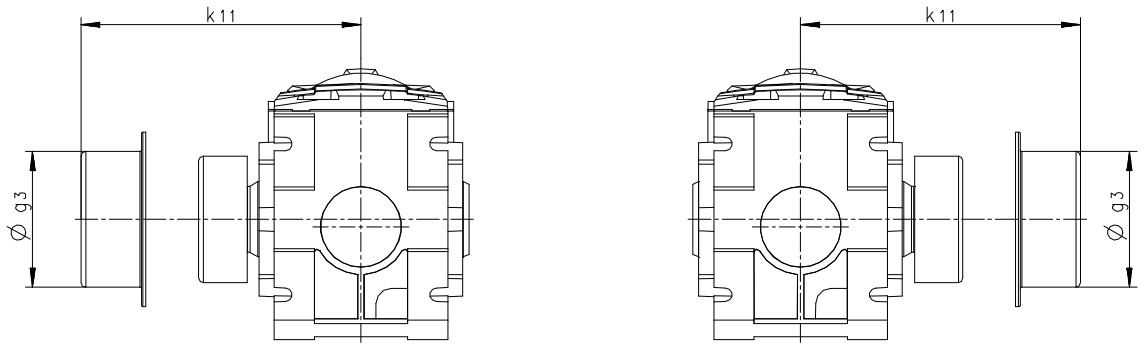

Product	Dimensions		Mass
	g_3	k_{11}	m
	[mm]	[mm]	[kg]
g500-B45	65.0	87.5	0.050
g500-B110	79.0	97.5	0.050
g500-B240	90.0	111	0.050
g500-B450	90.0	108	0.050



MF three-phase AC motors

0.55 to 22 kW

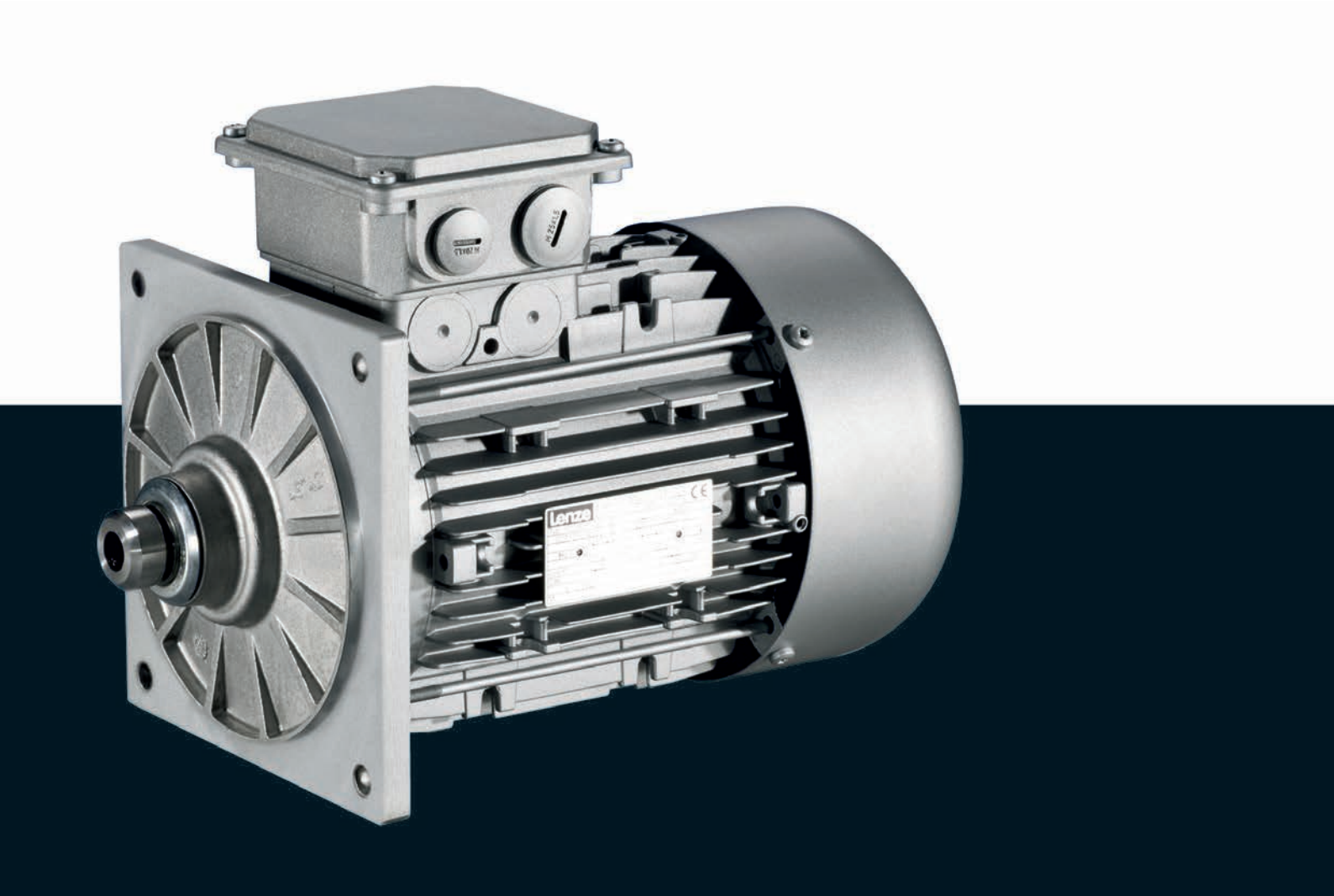

MF three-phase AC motors

Contents

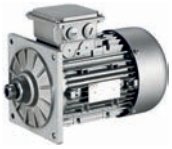

General information	List of abbreviations	6.11 - 4
	Product key	6.11 - 5
	Product information	6.11 - 6
	Functions and features	6.11 - 7
	Motor – inverter assignment	6.11 - 10
	Dimensioning	6.11 - 11
Technical data	Standards and operating conditions	6.11 - 13
	Rated data for 120 Hz	6.11 - 14
	Dimensions, self-ventilated (4-pole)	6.11 - 15
	Dimensions, forced ventilated (4-pole)	6.11 - 16
	Dimensions, 8400 motec inverter	6.11 - 17
Accessories	Spring-applied brakes	6.11 - 19
	Resolver	6.11 - 31
	Incremental encoder and SinCos absolute value encoder	6.11 - 32
	Blowers	6.11 - 33
	Temperature monitoring	6.11 - 35
	Terminal box	6.11 - 37
	Plug connectors	6.11 - 42
	ICN connector	6.11 - 42
	M12 connector	6.11 - 51
	HAN connector	6.11 - 52
	2nd shaft end	6.11 - 57
	Protection cover	6.11 - 58

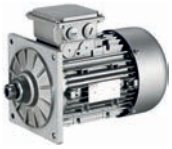

List of abbreviations

$\eta_{100\,\%}$	[%]	Efficiency
$\eta_{75\,\%}$	[%]	Efficiency
$\eta_{50\,\%}$	[%]	Efficiency
cos φ		Power factor
I_N	[A]	Rated current
I_{max}	[A]	Max. current consumption
J	[kgcm²]	Moment of inertia
m	[kg]	Mass
M_a	[Nm]	Starting torque
M_b	[Nm]	Stalling torque
M_{max}	[Nm]	Max. torque
M_N	[Nm]	Rated torque
n_N	[r/min]	Rated speed
P_N	[kW]	Rated power
P_{max}	[kW]	Max. power input

U_{max}	[V]	Max. mains voltage
U_{min}	[V]	Min. mains voltage
$U_{N,\Delta}$	[V]	Rated voltage
$U_{N,Y}$	[V]	Rated voltage

CE	Communauté Européenne
CSA	Canadian Standards Association
DIN	Deutsches Institut für Normung e.V.
EMC	Electromagnetic compatibility
EN	European standard
IEC	International Electrotechnical Commission
IM	International Mounting Code
IP	International Protection Code
NEMA	National Electrical Manufacturers Association
UL	Underwriters Laboratory Listed Product
UR	Underwriters Laboratory Recognized Product
VDE	Verband deutscher Elektrotechniker (Association of German Electrical Engineers)
CCC	China Compulsory Certificate
GOST	Certificate for Russian Federation
cURus	Combined certification marks of UL for the USA and Canada
UkrSEPRO	Certificate for Ukraine



Product key

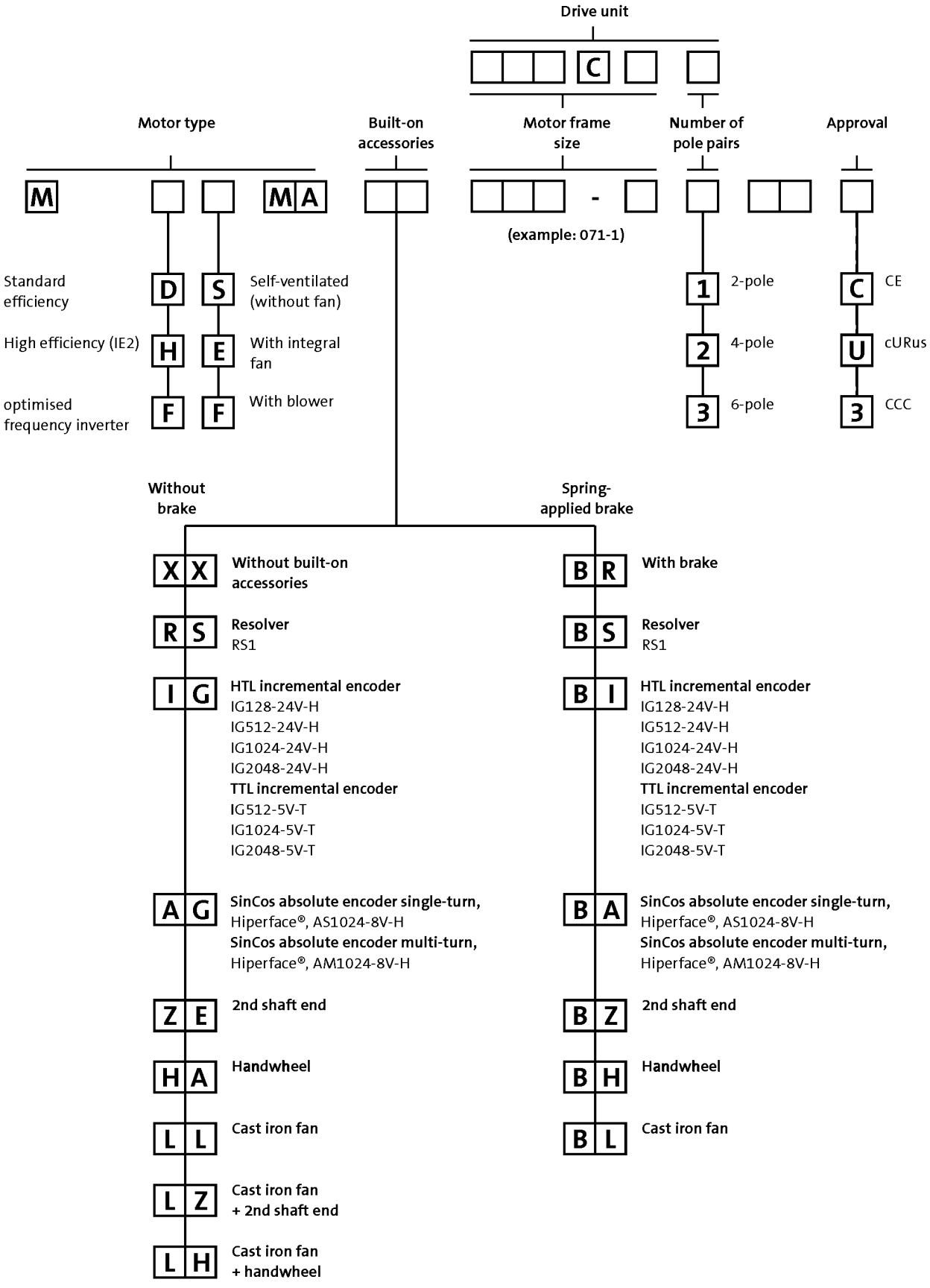
Drive unit
C
Motor type
Built-on accessories
Motor frame size
Number of pole pairs
Approval
M
M A
-
(example: 071-1)
Standard efficiency
D
S
Self-ventilated (without fan)
High efficiency (IE2)
H
E
With integral fan
optimised frequency inverter
F
F
With blower
1
2-pole
2
4-pole
3
6-pole
C
CE
U
cURus
3
CCC
Without brake
Spring-applied brake
X X
Without built-on accessories
R S
Resolver
RS1
I G
HTL incremental encoder
IG128-24V-H
IG512-24V-H
IG1024-24V-H
IG2048-24V-H
TTL incremental encoder
IG512-5V-T
IG1024-5V-T
IG2048-5V-T
A G
SinCos absolute encoder single-turn,
Hiperface®, AS1024-8V-H
SinCos absolute encoder multi-turn,
Hiperface®, AM1024-8V-H
Z E
2nd shaft end
H A
Handwheel
L L
Cast iron fan
L Z
Cast iron fan
+ 2nd shaft end
L H
Cast iron fan
+ handwheel
B R
With brake
B S
Resolver
RS1
B I
HTL incremental encoder
IG128-24V-H
IG512-24V-H
IG1024-24V-H
IG2048-24V-H
TTL incremental encoder
IG512-5V-T
IG1024-5V-T
IG2048-5V-T
B A
SinCos absolute encoder single-turn,
Hiperface®, AS1024-8V-H
SinCos absolute encoder multi-turn,
Hiperface®, AM1024-8V-H
B Z
2nd shaft end
B H
Handwheel
B L
Cast iron fan

MF three-phase AC motors

General information

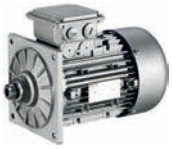

Product information

Special motors have been designed for direct attachment to Lenze gearboxes.

These motors are attached to the gearbox without the use of a clutch. Torque transmission between the toothing and the motor shaft is friction-locked via a tapered connection here.
This motor design means that the geared motors only require a small installation space.

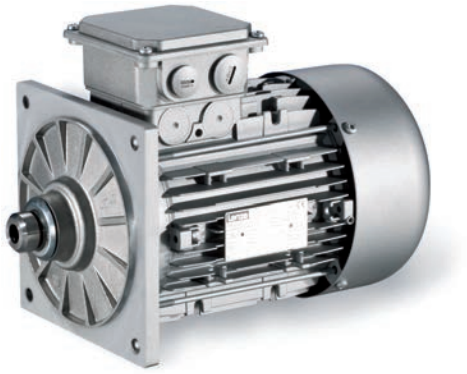

L-force MF three-phase AC motors are available in a power range from 0.55 to 22 kW and have been fully optimised for inverter operation.

The benefits for you:
- Up to sizes smaller than standard three-phase AC motors
- The motors exceed the minimum efficiency levels of efficiency class IE2
- Large speed setting range: 1:24 (without field weakening)
- Dynamic thanks to a low moment of inertia

Basic versions
- The thermal sensors integrated as standard allow for permanent temperature monitoring and are coordinated to the motor winding's temperature class F (155°C).
- The motors of the basic version are adapted to ambient conditions by enclosure IP55.
- In tough operating conditions, the surface and corrosion protection system is provided to reliably protect the motor from corrosive media.

Options
- Various brake sizes – each available with several braking torques – can be combined with the three-phase AC motors.
- The LongLife version of the brake can easily reach 10 x 10^6 switching cycles.
- A resolver and various incremental and absolute value encoders can be fitted for speed and position detection.
- For fast commissioning, the motors are also available with connectors for the power connection, brake, blower and feedback.
- Instead of an integral fan, the motor can optionally be equipped with a blower. No torque reduction is then necessary, even at speeds below 20 Hz.
- For drive tasks in decentralised applications, the motor can be ordered with the motec inverter connected to the terminal box.
- The motors are available with cURus, GOST-R, CCC and UkrSepro approval.
- Smooth start/braking is possible by increasing the motor's centrifugal mass with a cast iron fan.
- The motor can be equipped with a handwheel for manual setup or emergency operations.
- To protect the fan from objects falling in, the fan cover can be equipped with a protection cover.
- A 2nd shaft end is available for further modifications.



Functions and features

Size				
Motor	063	071	080	090
Spring-applied brake				
Design	Standard or LongLife design Reduced or standard braking torque With rectifier With manual release lever Low noise		Standard or LongLife design Reduced, standard or increased braking torque With rectifier With manual release lever Low noise	
Feedback				
Design	Resolver Incremental encoder Absolute value encoder (multi-turn)			
Thermal sensor				
Thermal contact	TKO			
Thermal detector	KTY83-110 KTY84-130			
PTC thermistor	PTC			
Motor connection				
Power connection	Terminal box ICN connector HAN10E connector HAN modular connector			
Brake connection	Terminal box ICN connector HAN modular connector HAN10E connector			
Blower connection	Terminal box ICN connector			
Feedback connection	Terminal box ICN connector			
Temperature sensor connection	Terminal box TKO or PTC at connector in the power connection KTY at connector in the feedback connection			
Shaft bearings				
Position of the locating bearing	Standard motors (B3, B5, B14): side B Motors for gearbox direct mounting: side A			
Bearing type	Deep-groove ball bearing with high-temperature resistant grease, 2 sealing discs or cover plates			
Colour				
	Not coated Primed Paint in various corrosion-protection designs in accordance with RAL colours			
Further options				
	Protection cover	Protection cover 2nd shaft end		

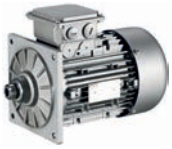

Functions and features

Size			
Motor	100	112	132
Spring-applied brake			
Design	Standard or LongLife design Reduced, standard or increased braking torque With rectifier With manual release lever Low noise	Standard design Reduced, standard or increased braking torque With rectifier With manual release lever Low noise	
Feedback			
Design	Resolver Incremental encoder Absolute value encoder (multi-turn)		
Thermal sensor			
Thermal contact	TKO		
Thermal detector	KTY83-110 KTY84-130		
PTC thermistor	PTC		
Motor connection			
Power connection	Terminal box ICN connector HAN10E connector HAN modular connector	Terminal box	Terminal box HAN modular connector
Brake connection	Terminal box ICN connector HAN modular connector HAN10E connector	Terminal box	Terminal box HAN modular connector
Blower connection	Terminal box ICN connector		
Feedback connection	Terminal box ICN connector		
Temperature sensor connection	Terminal box TKO or PTC at connector in the power connection KTY at connector in the feedback connection	Terminal box KTY at connector in the feedback connection	
Shaft bearings			
Position of the locating bearing	Standard motors (B3, B5, B14): side B Motors for gearbox direct mounting: side A		
Bearing type	Deep-groove ball bearing with high-temperature resistant grease, 2 sealing discs or cover plates		
Colour			
	Not coated Primed Paint in various corrosion-protection designs in accordance with RAL colours		
Further options			
	Protection cover 2nd shaft end		



Functions and features

Surface and corrosion protection

For optimum protection of three-phase AC motors against ambient conditions, the surface and corrosion protection system (OKS) offers tailor-made solutions.

Various surface coatings ensure that the motors operate reliably even at high air humidity, in outdoor installation or in the presence of atmospheric impurities. Any colour from the RAL Classic collection can be chosen for the top coat. The three-phase AC motors are also available unpainted (no surface and corrosion protection).

Surface and corrosion protection system	Applications	Measures
OKS-G (primed)	• Dependent on subsequent top coat applied	• 2K PUR priming coat (grey)
OKS-S (small)	• Standard applications • Internal installation in heated buildings • Air humidity up to 90%	• Surface coating as per corrosivity category C1 (in line with EN 12944-2)
OKS-M (medium)	• Internal installation in non-heated buildings • Covered, protected external installation • Air humidity up to 95%	• Surface coating as per corrosivity category C2 (in line with EN 12944-2)
OKS-L (high)	• External installation • Air humidity above 95% • Chemical industry plants • Food industry	• Surface coating as per corrosivity category C3 (in line with EN 12944-2) • Blower cover and B end shield additionally primed • Screws zinc-coated • Cable glands with gaskets • Corrosion-resistant brake with cover ring, stainless friction plate, and chrome-plated armature plate (on request) Optional measures: • Motor recesses sealed off (on request)

Structure of surface coating

Surface and corrosion protection system	Corrosivity category	Surface coating	Colour
	DIN EN ISO 12944-2	Structure	
Without OKS (uncoated)			
OKS-G (primed)		2K PUR priming coat	
OKS-S (small)	C1	2K-PUR top coat	Standard: RAL 7012 Optional: RAL Classic
OKS-M (medium)	C2	2K PUR priming coat 2K-PUR top coat	
OKS-L (high)	C3		

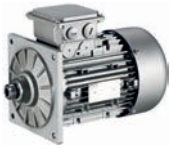

Motor – inverter assignment

Rated frequency 120 Hz

- ► Decentralised inverter 8400 motec (E84DVB)
- ► Inverter Drives 8400 (E84AV)

Rated power	Product key		
	Motor	Inverter	
P_N			
[kW]			
0.55	MF□□□□□063-32	E84DVB□5514S□□□2□	E84AV□□□5514□□0
0.75	MF□□□□□063-42	E84DVB□7514S□□□2□	E84AV□□□7514□□0
1.10	MF□□□□□071-32	E84DVB□1124S□□□2□	E84AV□□□1124□□0
1.50	MF□□□□□071-42	E84DVB□1524S□□□2□	E84AV□□□1524□□0
2.20	MF□□□□□080-32	E84DVB□2224S□□□2□	E84AV□□□2224□□0
3.00	MF□□□□□080-42	E84DVB□3024S□□□2□	E84AV□□□3024□□0
4.00	MF□□□□□090-32	E84DVB□4024S□□□2□	E84AV□□□4024□□0
5.50	MF□□□□□100-12	E84DVB□5524S□□□2□	E84AV□□□5524□□0
7.50	MF□□□□□100-32	E84DVB□7524S□□□2□	E84AV□□□7524□□0
11.0	MF□□□□□112-22		E84AV□□□1134□□0
15.0	MF□□□□□132-12		E84AV□□□1534□□0
18.5	MF□□□□□132-22		E84AV□□□1834□□0
22.0	MF□□□□□132-32		E84AV□□□2234□□0



Dimensioning

Torque derating at low motor frequencies

Motor size-dependent torque reduction, taking into account the thermal response during operation on the inverter.

Torque characteristics

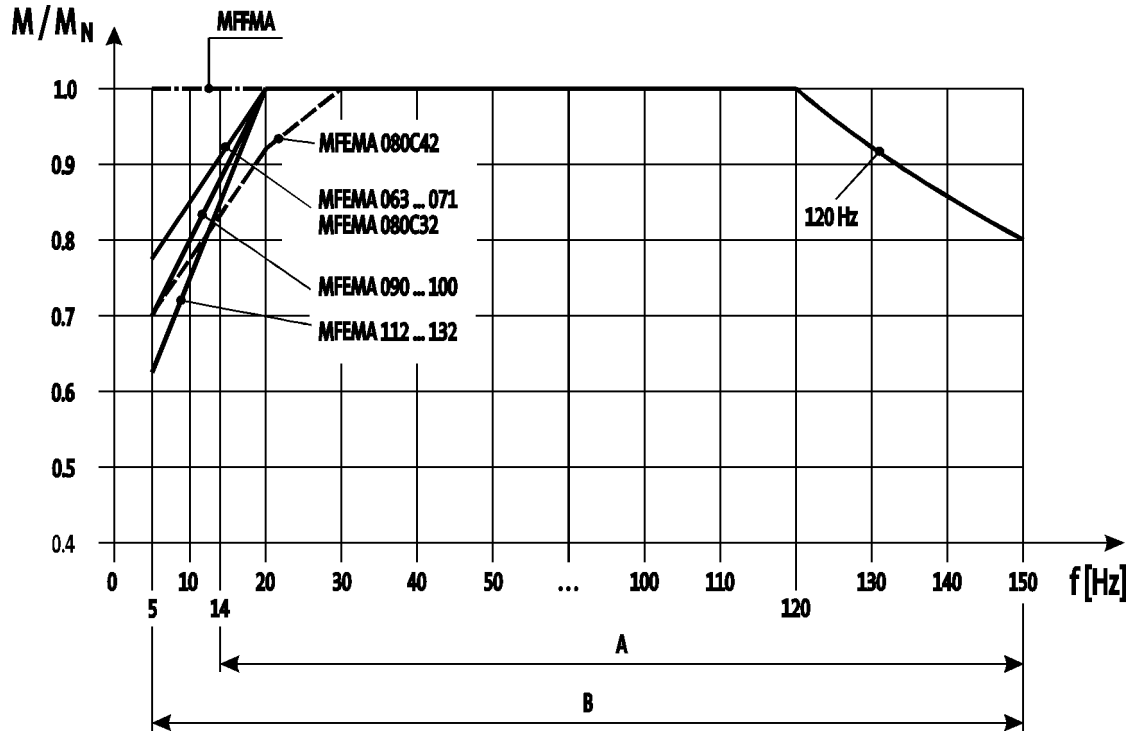

A = Operation with integral fan and brake
B = Operation with integral fan and brake control "Holding current reduction"

► The motor specifications stated in this catalogue for inverter operation apply to operation with a Lenze inverter. If you are uncertain, get in touch with the manufacturer of the inverter to ask whether the device is capable of driving the motor with the stated specifications (e.g. setting range, base frequency).

You can use the Drive Solution Designer for precise drive dimensioning.

The Drive Solution Designer helps you to carry out a fast and high-quality drive dimensioning.
The software includes well-founded and proven knowledge on drive applications and electro-mechanical drive components.

Please contact your Lenze sales office.

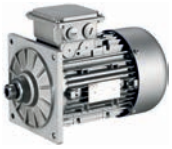



Standards and operating conditions

Enclosure			
EN 60529			IP55 [1)] IP65 [1)] IP66 [1)]
Conformity			
CE			Low-Voltage Directive
			2006/95/EC
EAC			TP TC 004/2011 (TR C
Approval			
			UkrSEPRO
CCC			GB Standard 12350-2009
CSA			CSA 22.2 No. 100
cURus			UL 1004-1 UL 1004-8 Power Conversion Equipment (File-No. E210321)
Temperature class			
IEC/EN 60034-1; utilisation			B
IEC/EN 60034-1; insulation system (enamel-insulated wire)			F
Min. ambient operating temperature			
	$T_{opr,min}$	[°C]	-20
Max. ambient temperature for operation			
	$T_{opr,max}$	[°C]	40
With power reduction	$T_{opr,max}$	[°C]	60
Site altitude			
Amsl	H_{max}	[m]	4000
Max. speed			
	n_{max}	[r/min]	4500

[1)] Designs with different degrees of protection:
IP55 with brake (IP54 with manual release lever).
IP54 with resolver RS1.
IP54 with HTL incremental encoder IG128-24V-H.



Rated data for 120 Hz

4-pole motors

	P_N	n_N	$U_{N,\Delta}$	$I_{N,\Delta}$	$U_{N,Y}$	$I_{N,Y}$
			± 10 %		± 10 %	
	[kW]	[r/min]	[V]	[A]	[V]	[A]
MF□□□□□063-32	0.55	3440	200	3.20	345	1.80
MF□□□□□063-42	0.75	3400	210	4.00	370	2.30
MF□□□□□071-32	1.10	3490	200	5.50	345	3.20
MF□□□□□071-42	1.50	3450	205	6.80	360	3.90
MF□□□□□080-32	2.20	3500	200	9.10	345	5.30
MF□□□□□080-42	3.00	3480	210	11.4	370	6.60
MF□□□□□090-32	4.00	3480			370	8.50
MF□□□□□100-12	5.50	3525			340	12.9
MF□□□□□100-32	7.50	3515			375	15.9
MF□□□□□112-22	11.0	3530			370	23.5
MF□□□□□132-12	15.0	3560			370	31.2
MF□□□□□132-22	18.5	3560			360	39.0
MF□□□□□132-32	22.0	3550			380	44.5

	M_N	M_{max}	cos φ	$\eta_{75\,\%}$	$\eta_{100\,\%}$	J [1)]	m [1)]
	[Nm]	[Nm]		[%]	[%]	[kgcm²]	[kg]
MF□□□□□063-32	1.53	6.00	0.68	75.0	75.0	3.70	4.40
MF□□□□□063-42	2.11	8.00	0.69	79.6	79.6	3.70	4.40
MF□□□□□071-32	3.01	12.0	0.77	81.4	81.4	12.8	6.40
MF□□□□□071-42	4.15	16.0	0.80	82.8	82.8	12.8	6.40
MF□□□□□080-32	6.00	24.0	0.86	84.3	84.3	28.0	11.0
MF□□□□□080-42	8.20	32.0	0.86	85.5	85.5	28.0	11.0
MF□□□□□090-32	10.9	44.0	0.85	87.0	86.6	32.0	18.0
MF□□□□□100-12	14.9	60.0	0.81	87.9	87.7	61.0	26.5
MF□□□□□100-32	20.3	80.0	0.81	88.9	88.7	61.0	26.5
MF□□□□□112-22	29.7	120	0.78	89.8	89.8	107	38.0
MF□□□□□132-12	40.3	160	0.84	88.9	90.6	336	66.0
MF□□□□□132-22	49.6	200	0.84	89.9	91.2	336	66.0
MF□□□□□132-32	59.2	240	0.83	90.5	91.6	336	66.0

[1)] Without accessories



Dimensions, self-ventilated (4-pole)

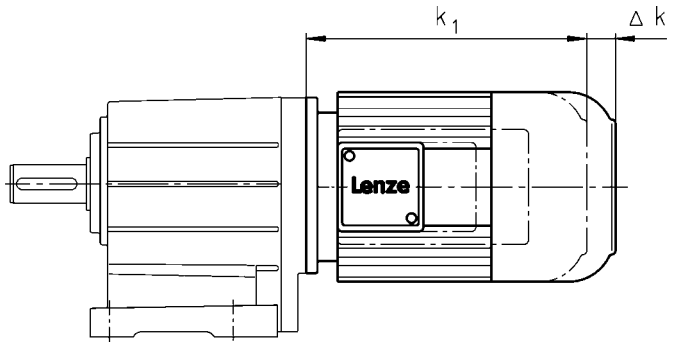

	Motor type			
	MFEMAXX	MFEMABR	MFEMABS MFEMABI MFEMABA	MFEMARS MFEMAIG MFEMAAG
Motor frame size				
	Δ k	Δ k	Δ k	Δ k
	[mm]	[mm]	[mm]	[mm]
063-32 063-42	0	40	103	56
071-32 071-42		52	96	52
080-32 080-42		73	111	111
090-32		68	105	87
100-12 100-32		76	101	81
112-22		90	120	80
132-12 132-22 132-32		110	125	103

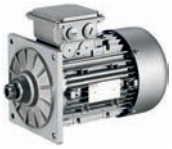

Dimensions, forced ventilated (4-pole)

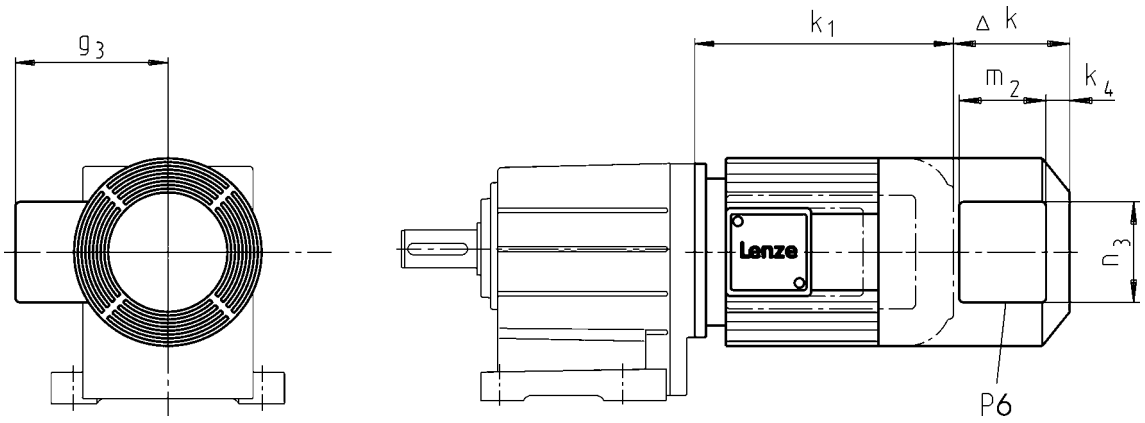

Motor type									
	MFFMAXX	MFFMABR	MFFMABS MFFMABI MFFMABA	MFFMARS MFFMAIG MFFMAAG					

Motor frame size									
	Δ k	Δ k	Δ k	Δ k	k_4	g_3	m_2	n_3	P_6
	[mm]	[mm]	[mm]	[mm]	[mm]	[mm]	[mm]	[mm]	[mm]
063-32 063-42	128	170	170	128	12	115	95	105	1x M16x1.5
071-32 071-42		165	165			122			
080-32 080-42		183	183		13	132	96	106	
090-32		181	181		22	141	95	105	
100-12 100-32	109	170	170	109		150			
112-22	102	183	183	183		162			
132-12 132-22 132-32	115	202	202	202	32	182			



Dimensions, 8400 motec inverter

Rated frequency 120 Hz

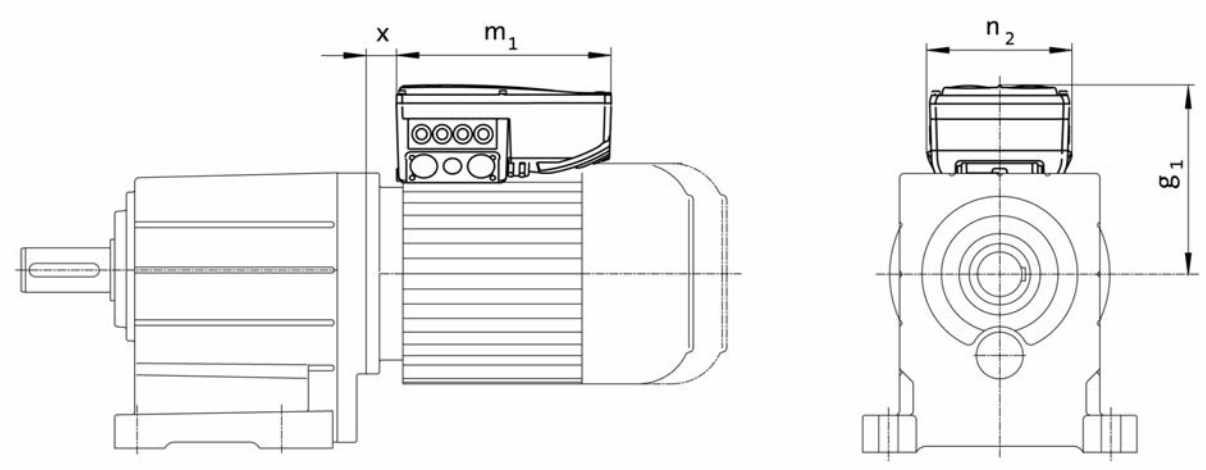

Product key					
Motor	Inverter				
		$g_{1,\ 120Hz}$	$m_{1,\ 120Hz}$	$n_{2,\ 120Hz}$	x_{120Hz}
		[mm]	[mm]	[mm]	[mm]
MF□□□□□063-32	E84DVB□5514S□□□2□	154	241	161	18.8
MF□□□□□063-42	E84DVB□7514S□□□2□				
MF□□□□□071-32	E84DVB□1124S□□□2□	163			21.0
MF□□□□□071-42	E84DVB□1524S□□□2□				
MF□□□□□080-32	E84DVB□2224S□□□2□	201	260	176	24.5
MF□□□□□080-42	E84DVB□3024S□□□2□				
MF□□□□□090-32	E84DVB□4024S□□□2□	261	325	195	16.0
MF□□□□□100-12	E84DVB□5524S□□□2□	272			17.1
MF□□□□□100-32	E84DVB□7524S□□□2□				

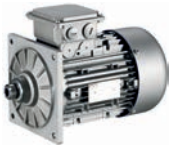



Spring-applied brakes

Three-phase AC motors can be fitted with a spring-applied brake. This is activated after the supply voltage is switched off (closed-circuit principle). For optimum adjustment of the brake motor to the application, a range of braking torques and control modes is available for every motor frame size. For applications with very high operating frequencies the brake is also available in a LongLife version, with reinforced mechanical brake components.

Features

Versions
- **Standard**
  - 1 x 10^6 repeating switching cycles
  - 1 x 10^6 reversing switching cycles
- **LongLife**
  - 10 x 10^6 repeating switching cycles
  - 15 x 10^6 reversing switching cycles

Control
- DC supply
- AC supply via rectifier in the terminal box

Enclosure
- Without manual release IP55
- With manual release IP54

Friction lining
- Non-asbestos, low wearing

Options
- Manual release
- UL/CSA approval
- Noise-reduced

Motor – brake assignment

Design	Standard		LongLife	
Motor frame size	**Size**	**Rated torque**	**Size**	**Rated torque**
	Brake		Brake	
		M_k		M_k
		[Nm]		[Nm]
063-32	06	2.50	06	4.00
063-42	06	4.00		
071-32	06	2.50	06	4.00
	06	4.00	08	3.50
	08	3.50		
071-42	06	2.50	06	4.00
	06	4.00	08	3.50
	08	3.50	08	8.00
	08	8.00		
080-32	08	3.50	08	8.00
	08	8.00	10	7.00
	10	7.00		
080-42	08	3.50	08	8.00
	08	8.00	10	7.00
	10	7.00	10	16.0
	10	16.0		

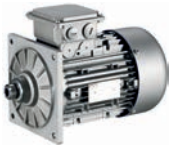

Spring-applied brakes

Motor – brake assignment

Design	Standard	LongLife

Motor frame size	Size	Rated torque	Size	Rated torque
	Brake		Brake	
		M_k		M_k
		[Nm]		[Nm]
090-32	08 08 10 10 10	3.50 8.00 7.00 16.0 23.0	08 10 10	8.00 7.00 16.0
100-12	10 10 12 12	7.00 16.0 14.0 32.0	10 12 12	16.0 14.0 32.0
100-32	10 10 12 12 12	7.00 16.0 14.0 32.0 46.0		
112-22	12 12 14 14	14.0 32.0 35.0 60.0		
132-12	14 14 16 16	35.0 60.0 60.0 80.0		
132-22 132-32	14 14 16 16 16	35.0 60.0 60.0 80.0 100		



Spring-applied brakes

Direct connection without rectifier

If the brake is activated directly without a rectifier, a freewheeling diode or a spark suppressor is required to protect against induction peaks.

- Supply voltages
  DC 24 V
  DC 180 V
  DC 205 V

Connection via mains voltage with brake rectifier

If the brake is not directly supplied with DC voltage, a rectifier is required. This is included in the scope of supply and is located in the terminal box of the motor. The rectifier converts the AC voltage of the connection into DC voltage. The following rectifiers are available:

Half-wave rectifier, 6-pole

- Ratio of supply voltage to brake coil voltage = 2.22
- Approved by UL/CSA
- Supply voltages
  AC 230 V
  AC 400 V
  AC 460 V



Bridge rectifier, 6-pole

- Ratio of supply voltage to brake coil voltage = 1.11
- Supply voltage
  AC 230 V



Bridge/half-wave rectifier, 6-pole

- Ratio of supply voltage to brake coil voltage
  up to overexcitation time = 1.11
  beyond overexcitation time = 2.22



Supply voltages:

- AC 230 V
- AC 400 V

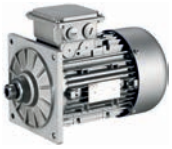

Spring-applied brakes

Connection via mains voltage with brake rectifier

Bridge/half-wave rectifier, 6-pole
- Ratio of supply voltage to brake coil voltage
  up to overexcitation time = 1.11
  beyond overexcitation time = 2.22



Supply voltages:
- AC 230 V
- AC 400 V

During the switching operation the bridge/half-wave rectifier functions as a bridge rectifier for the overexcitation time $t_{ü}$ and then as a half-wave rectifier. This combination optimises the performance of the brake – depending on the assignment of brake coil voltage and supply voltage:

- **Short-time overexcitation of the brake coil**
  Activating the brake coil for the overexcitation time $t_{ü}$ with twice the rated voltage allows the disengagement time to be reduced. The brake opens more quickly and wear on the friction lining is reduced.
  These features make this activation version particularly suitable for lifting applications. It is therefore only available in combination with a brake with increased braking torque.
- **Holding current reduction (cold brake)**
  By reducing the holding current, the bridge/half-wave rectifier is able to reduce the power input to the open brake. As the brake heats up less, this type of activation is known as "cold brake".



Spring-applied brakes

Permissible friction energy

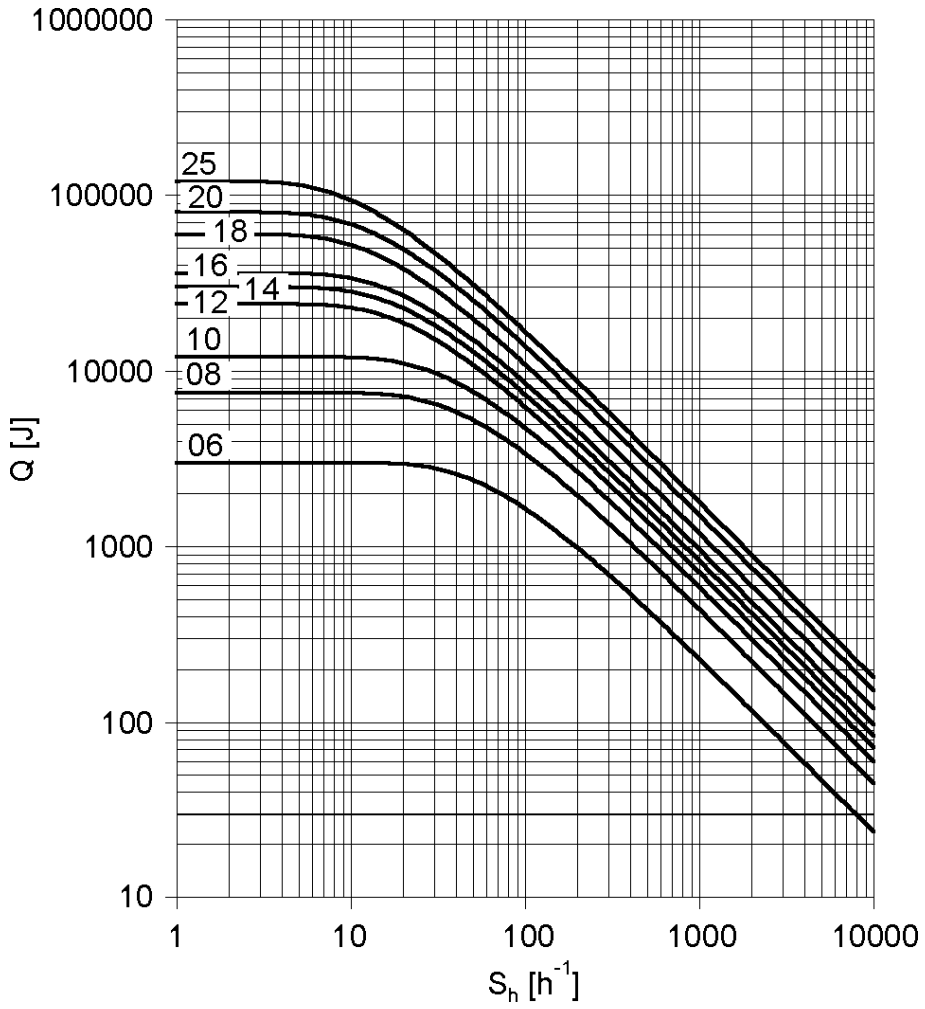

Q =Switching energy per switching cycle
S_h =Operating frequency
Brake size = 06 to 25

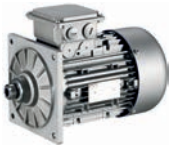

Spring-applied brakes

Rated data with reduced braking torque

► Please enquire for braking torques and maximum switching work values not listed here.

Size			06	08	10	12	14	16	18	20	25
Power input											
	P_{in}	[kW]	0.020	0.025	0.030	0.040	0.050	0.055	0.085	0.10	0.11
Braking torque											
100	M_B	[Nm]	2.50	3.50	7.00	14.0	35.0	60.0	80.0	145	265
1000	M_B	[Nm]	2.30	3.10	6.10	12.0	30.0	50.0	65.0	115	203
1200	M_B	[Nm]	2.30	3.10	6.00	12.0	29.0	48.0	63.0	112	199
1500	M_B	[Nm]	2.20	3.00	5.80	11.0	28.0	47.0	61.0	109 [1)]	193 [1)]
1800	M_B	[Nm]	2.10	2.90	5.70	11.0	28.0	46.0	60.0 [1)]		
3000	M_B	[Nm]	2.00	2.80	5.30	10.0	26.0 [1)]	43.0 [1)]			
3600	M_B	[Nm]	2.00	2.70	5.20	10.0 [1)]					
Maximum switching energy											
100	Q_E	[KJ]	3.00	7.50	12.0	24.0	30.0	36.0	60.0	80.0	120
1000	Q_E	[KJ]	3.00	7.50	12.0	24.0	30.0	36.0	60.0	80.0	120
1200	Q_E	[KJ]	3.00	7.50	12.0	24.0	30.0	36.0	60.0	80.0	120
1500	Q_E	[KJ]	3.00	7.50	12.0	24.0	30.0	36.0	60.0	24.0 [1)]	36.0 [1)]
1800	Q_E	[KJ]	3.00	7.50	12.0	24.0	30.0	36.0	36.0 [1)]		
3000	Q_E	[KJ]	3.00	7.50	12.0	24.0	18.0 [1)]	11.0 [1)]			
3600	Q_E	[KJ]	3.00	7.50	12.0	7.00 [1)]					
Transition operating frequency											
	$S_{hü}$	[1/h]	79.0	50.0	40.0	30.0	28.0	27.0	20.0	19.0	15.0
Moment of inertia											
	J	[kgcm²]	0.015	0.061	0.20	0.45	0.63	1.50	2.90	7.30	20.0
Mass											
	m	[kg]	0.90	1.50	2.60	4.20	5.80	8.70	12.6	19.5	31.0

[1)] In the region of the load limit the value for friction energy Q_{BW} can be reduced to 40 %.



Spring-applied brakes

Rated data with reduced braking torque

► Activation via half-wave or bridge rectifier

Size			06	08	10	12	14	16	18	20	25
Friction energy											
	Q_{BW}	[MJ]	113	210	264	706	761	966	1542	2322	3522
Delay time											
Engaging	t_{11}	[ms]	11.0	14.0	20.0	21.0	37.0	53.0	32.0	47.0	264
Rise time											
Braking torque	t_{12}	[ms]	13.0	10.0	17.0	19.0	22.0	30.0	20.0	100	120
Engagement time											
	t_1	[ms]	24.0		37.0	40.0	59.0	83.0	52.0	147	384
Disengagement time											
	t_2	[ms]	35.0	37.0	57.0	65.0	148	169	230	207	269

► Activation via bridge/half-wave rectifier

Design			Holding current reduction (cold brake)								
Size			06	08	10	12	14	16	18	20	25
Friction energy											
	Q_{BW}	[MJ]	113	210	264	706	761	966	1542	2322	3522
Overexcitation time											
	$t_{ü}$	[ms]	300				1300				
Min. rest time											
	t	[ms]	900				3900				
Delay time											
Engaging	t_{11}	[ms]	12.0	22.0	35.0	49.0	61.0	114	83.0	126	304
Rise time											
Braking torque	t_{12}	[ms]	14.0	16.0	30.0	45.0	37.0	65.0	52.0	269	138
Engagement time											
	t_1	[ms]	26.0	38.0	66.0	93.0	97.0	180	134	395	443
Disengagement time											
	t_2	[ms]	35.0	37.0	57.0	65.0	148	169	230	207	269

► The brake response and application times are guide values. The engagement time is 10 times longer with AC-side switching. With the maximum air gap the disengagement time t_2 – depending on the brake and control – is up to 4 times longer than the disengagement time with the rated air gap.

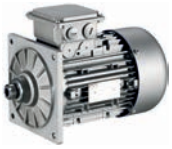

Spring-applied brakes

Rated data with standard braking torque

► Please enquire for braking torques and maximum switching work values not listed here.

Size			06	08	10	12	14	16	18	20	25
Power input											
	P_{in}	[kW]	0.020	0.025	0.030	0.040	0.050	0.055	0.085	0.10	0.11
Braking torque											
100	M_B	[Nm]	4.00	8.00	16.0	32.0	60.0	80.0	150	260	400
1000	M_B	[Nm]	3.70	7.20	14.0	27.0	51.0	66.0	121	206	307
1200	M_B	[Nm]	3.60	7.00	14.0	27.0	50.0	65.0	118	201	300
1500	M_B	[Nm]	3.50	6.80	13.0	26.0	48.0	63.0	115	195 [1)]	291 [1)]
1800	M_B	[Nm]	3.40	6.70	13.0	26.0	47.0	61.0	112 [1)]		
3000	M_B	[Nm]	3.20	6.30	12.0	24.0	44.0 [1)]	57.0 [1)]			
3600	M_B	[Nm]	3.20	6.10	12.0	23.0 [1)]					
Maximum switching energy											
100	Q_E	[KJ]	3.00	7.50	12.0	24.0	30.0	36.0	60.0	80.0	120
1000	Q_E	[KJ]	3.00	7.50	12.0	24.0	30.0	36.0	60.0	80.0	120
1200	Q_E	[KJ]	3.00	7.50	12.0	24.0	30.0	36.0	60.0	80.0	120
1500	Q_E	[KJ]	3.00	7.50	12.0	24.0	30.0	36.0	60.0	24.0 [1)]	36.0 [1)]
1800	Q_E	[KJ]	3.00	7.50	12.0	24.0	30.0	36.0	36.0 [1)]		
3000	Q_E	[KJ]	3.00	7.50	12.0	24.0	18.0 [1)]	11.0 [1)]			
3600	Q_E	[KJ]	3.00	7.50	12.0	7.00 [1)]					
Transition operating frequency											
	$S_{hü}$	[1/h]	79.0	50.0	40.0	30.0	28.0	27.0	20.0	19.0	15.0
Moment of inertia											
	J	[kgcm²]	0.015	0.061	0.20	0.45	0.63	1.50	2.90	7.30	20.0
Mass											
	m	[kg]	0.90	1.50	2.60	4.20	5.80	8.70	12.6	19.5	31.0

[1)] In the region of the load limit the value for friction energy Q_{BW} can be reduced to 40 %.



Spring-applied brakes

Rated data with standard braking torque

► Activation via half-wave or bridge rectifier

Size			06	08	10	12	14	16	18	20	25
Friction energy											
	Q_{BW}	[MJ]	85.0	158	264	530	571	966	1542	2322	3522
Delay time											
Engaging	t_{11}	[ms]	15.0		28.0		17.0	27.0	33.0	65.0	110
Rise time											
Braking torque	t_{12}	[ms]	13.0	16.0	19.0	25.0		30.0	45.0	100	120
Engagement time											
	t_1	[ms]	28.0	31.0	47.0	53.0	42.0	57.0	78.0	165	230
Disengagement time											
	t_2	[ms]	45.0	57.0	76.0	115	210	220	270	340	390

► Activation via bridge/half-wave rectifier

Design			Holding current reduction (cold brake)								
Size			06	08	10	12	14	16	18	20	25
Friction energy											
	Q_{BW}	[MJ]	85.0	158	264	530	571	966	1542	2322	3522
Overexcitation time											
	$t_{ü}$	[ms]	300				1300				
Min. rest time											
	t	[ms]	900				3900				
Delay time											
Engaging	t_{11}	[ms]	16.0	25.0	31.0	48.0	33.0	58.0	80.0	102	154
Rise time											
Braking torque	t_{12}	[ms]	14.0	27.0	21.0	43.0	49.0	64.0	109	157	168
Engagement time											
	t_1	[ms]	30.0	52.0		90.0	82.0	122	189	259	322
Disengagement time											
	t_2	[ms]	45.0	57.0	76.0	115	210	220	270	340	390

► The brake response and application times are guide values. The engagement time is 10 times longer with AC-side switching. With the maximum air gap the disengagement time t_2 – depending on the brake and control – is up to 4 times longer than the disengagement time with the rated air gap.

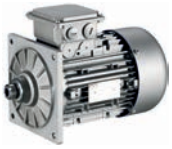

Spring-applied brakes

Rated data with increased braking torque

► Please enquire for braking torques and maximum switching work values not listed here.

Size			10	12	14	16	16	18	20	20	25	25
Power input												
	P_{in}	[kW]	0.030	0.040	0.050	0.055	0.055	0.085	0.10	0.10	0.11	0.11
Braking torque												
100	M_B	[Nm]	23.0	46.0	75.0	100	125	200	315	400	490	600
1000	M_B	[Nm]	20.0	39.0	64.0	83.0	103	162	249	317	376	461
1200	M_B	[Nm]	20.0	39.0	62.0	81.0	101	158	244	309	367	449
1500	M_B	[Nm]	19.0	38.0	60.0	78.0	98.0	153	237 [1]	300 [1]	356 [1]	436 [1]
1800	M_B	[Nm]	19.0	37.0	59.0	77.0	96.0	150 [1]				
3000	M_B	[Nm]	17.0	34.0	55.0 [1]	71.0 [1]	89.0 [1]					
3600	M_B	[Nm]	17.0	33.0 [1]								
Maximum switching energy												
100	Q_E	[KJ]	12.0	24.0	30.0	36.0	36.0	60.0	80.0	80.0	120	120
1000	Q_E	[KJ]	12.0	24.0	30.0	36.0	36.0	60.0	80.0	80.0	120	120
1200	Q_E	[KJ]	12.0	24.0	30.0	36.0	36.0	60.0	80.0	80.0	120	120
1500	Q_E	[KJ]	12.0	24.0	30.0	36.0	36.0	60.0	24.0 [1]	24.0 [1]	36.0 [1]	36.0 [1]
1800	Q_E	[KJ]	12.0	24.0	30.0	36.0	36.0	36.0 [1]				
3000	Q_E	[KJ]	12.0	24.0	18.0 [1]	11.0 [1]	11.0 [1]					
3600	Q_E	[KJ]	12.0	7.00 [1]								
Transition operating frequency												
	$S_{hü}$	[1/h]	40.0	30.0	28.0	27.0	27.0	20.0	19.0	19.0	15.0	15.0
Moment of inertia												
	J	[kgcm²]	0.20	0.45	0.63	1.50	1.50	2.90	7.30	7.30	20.0	20.0
Mass												
	m	[kg]	2.60	4.20	5.80	8.70	8.70	12.6	19.5	19.5	31.0	31.0

[1] In the region of the load limit the value for friction energy Q_{BW} can be reduced to 40 %.

► Activation via half-wave or bridge rectifier

Size			10	12	14	16		18	20		25	
Friction energy												
	Q_{BW}	[MJ]	198	353	253	563	241	578	1596	580	2465	1409
Delay time												
Engaging	t_{11}	[ms]	10.0	16.0	11.0	22.0	17.0	24.0	46.0	17.0	77.0	38.0
Rise time												
Braking torque	t_{12}	[ms]	19.0	25.0		30.0		45.0	100		120	
Engagement time												
	t_1	[ms]	29.0	41.0	36.0	52.0	47.0	69.0	146	117	197	158
Disengagement time												
	t_2	[ms]	109	193	308	297	435	356	378	470	451	532



Spring-applied brakes

Rated data with increased braking torque

► Activation via bridge/half-wave rectifier

Design			Holding current reduction (cold brake)									
Size			10	12	14	16		18	20		25	
Friction energy	Q_{BW}	[MJ]	198	353	253	563	241	578	1596	580	2465	1409
Overexcitation time	$t_{ü}$	[ms]	300			1300						
Min. rest time	t	[ms]	900			3900						
Delay time												
Engaging	t_{11}	[ms]	24.0	27.0	17.0	41.0	21.0	60.0	69.0	17.0	123	85.0
Rise time												
Braking torque	t_{12}	[ms]	44.0	43.0	37.0	55.0	37.0	113	148	100	190	270
Engagement time	t_1	[ms]	68.0	70.0	54.0	97.0	57.0	173	217	334	313	355
Disengagement time	t_2	[ms]	109	193	308	297	435	356	378	470	451	532

Design			Over-excitation									
Size			10	12	14	16		18	20		25	
Friction energy	Q_{BW}	[MJ]	264	706	761	966		1542	2322		3522	
Overexcitation time	$t_{ü}$	[ms]	300			1300						
Min. rest time	t	[ms]	900			3900						
Delay time												
Engaging	t_{11}	[ms]	29.0	54.0	31.0	70.0	46.0	86.0	103	55.0	171	135
Rise time												
Braking torque	t_{12}	[ms]	53.0	87.0	68.0	93.0	83.0	160	222	319	266	430
Engagement time	t_1	[ms]	82.0	141	99.0	163	129	246	325	374	437	565
Disengagement time	t_2	[ms]	53.0	81.0	117	141	168	151	160	167	184	204

► The brake response and application times are guide values. The engagement time is 10 times longer with AC-side switching. With the maximum air gap the disengagement time t_2 – depending on the brake and control – is up to 4 times longer than the disengagement time with the rated air gap.

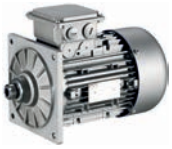

Spring-applied brakes

Manual release lever

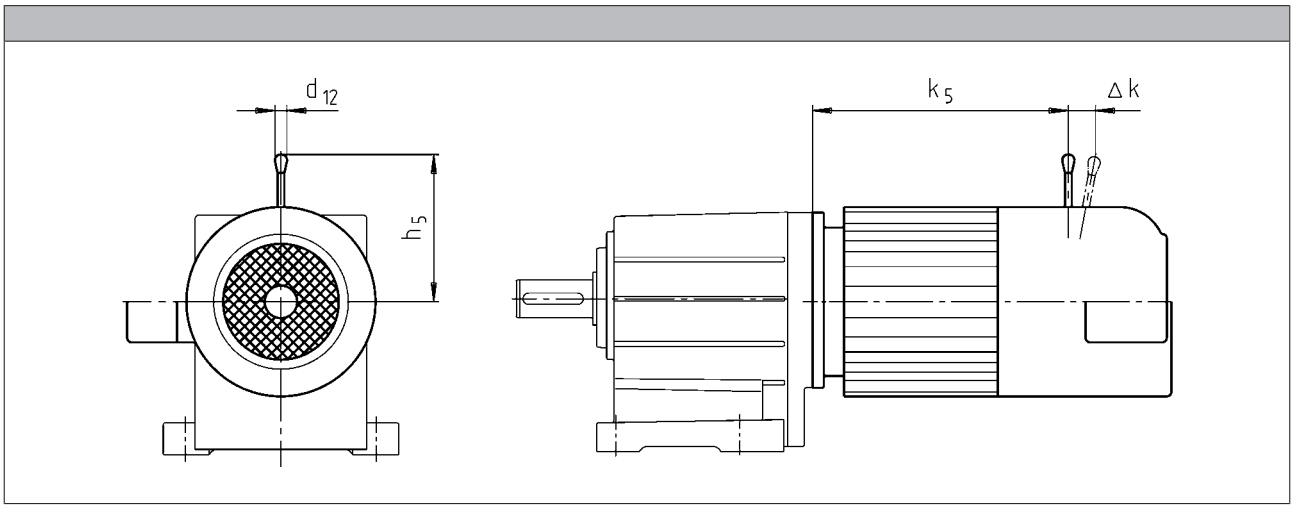

Motor frame size	Size				
	Brake				
		k_5	Δ k	h_5	d_{12}
		[mm]	[mm]	[mm]	[mm]
063-32 063-42	06	173	29	107	13.0
071-32 071-42	06 08	186 187	29 27	107 116	13.0 13.0
080-32 080-42	06 08	207 218	29 27	107 116	13.0 13.0
090-32	08 10	245 256	27 28	116 132	13.0 13.0
100-12 100-32	10 12	294 296	28 37	132 161	13.0 13.0
112-22	12 14	292 296	37 41	161 195	13.0 24.0
132-12 132-22 132-32	14 16	373 373	41 55	195 240	24.0 24.0

The following combinations with manual release lever and motor connection in the same position are not possible:

- HAN connector with connection in position 1
- Inverter motec
- Terminal box of motor sizes 071, 080, 090 for brake and retracting (M□□MA BR/BS/BA/BI)

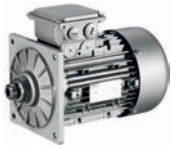

Resolver

Stator-fed resolver with two stator windings offset by 90° and one rotor winding with transformer winding.

► The three-phase AC motors with resolver cannot be used for speed-dependent safety functions in connection with the SM 301 safety module.

Product key				
				RS1
Accuracy				
			[']	-10 ... 10
Absolute positioning				
				1 revolution
Max. input voltage				
DC	$U_{in,max}$		[V]	10.0
Max. input frequency				
	$f_{in,max}$		[kHz]	4.00
Ratio				
Stator / rotor		± 5 %		0.30
Rotor impedance				
	Z_{ro}		[Ω]	51 + j90
Stator impedance				
	Z_{so}		[Ω]	102 + j150
Impedance				
	Z_{rs}		[Ω]	44 + j76
Min. insulation resistance				
At DC 500 V	R		[MΩ]	10.0
Number of pole pairs				
				1

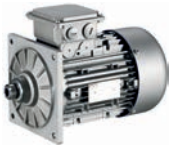

Incremental encoder and SinCos absolute value encoder

► The three-phase AC motors with incremental encoders or SinCos absolute value encoders cannot be used for speed-dependent safety functions in connection with the SM 301 safety module.

Encoder type			HTL incremental				TTL incremental			SinCos absolute value
Product key			IG128-24V-H	IG512-24V-H	IG1024-24V-H	IG2048-24V-H	IG512-5V-T	IG1024-5V-T	IG2048-5V-T	AM1024-8V-H
Encoder type										Multi-turn
Pulses			128	512	1024	2048	512	1024	2048	1024
Output signals			HTL				TTL			1 Vss
Interfaces			A, B track	A, B, N track and inverted						Hiperface
Absolute revolutions			0							4096
Accuracy		[']	-22.5 ... 22.5	-2 ... 2						-0.8 ... 0.8
Min. input voltage										
DC	$U_{in,min}$	[V]	8.00				4.75			7.00
Max. input voltage										
DC	$U_{in,max}$	[V]	26.0	30.0			5.25			12.0
Max. current consumption										
	I_{max}	[A]	0.040	0.15						0.080
Limit frequency										
	f_{max}	[kHz]	30.0	160			300			200
Inverter assignment			E84AVSC E84AVHC	E84AVHC			E84AVTC E94A ECS EVS93			

Inverters
- Inverter Drives 8400 StateLine (E84AVSC)
- Inverter Drives 8400 HighLine (E84AVHC)
- Inverter Drives 8400 TopLine (E84AVTC)

Servo-Inverters
- Servo Drives 9400 (E94A)
- 9300 servo inverters (EVS93)
- Servo Drives ECS



Blowers

► The use of a blower enables operation below 20 Hz without torque derating.

Rated data for 50 Hz

Size	Number of phases	Connection method					
Motor							
			U_{min}	U_{max}	P_{max}	I_{max}	m
			[V]	[V]	[kW]	[A]	[kg]
063	1		230	277	0.027	0.11	2.00
	3	Δ	200	303	0.028	0.12	
		Y	346	525		0.070	
071	1		230	277	0.027	0.10	2.10
	3	Δ	200	303	0.031	0.11	
		Y	346	525		0.060	
080	1		230	277	0.029	0.11	2.30
	3	Δ	200	303	0.031		
		Y	346	525		0.060	
090	1		220	277	0.065	0.29	2.70
	3	Δ	200	303	0.091	0.38	
		Y	346	525		0.22	
100	1		220	277	0.066	0.28	3.00
	3	Δ	200	303	0.091	0.37	
		Y	346	525		0.22	
112	1		220	277	0.071	0.28	3.10
	3	Δ	200	303	0.097	0.35	
		Y	346	525		0.20	
132	1		230	277	0.098	0.40	4.20
	3	Δ	200	303	0.12	0.58	
		Y	346	525		0.33	
160	1		230	277	0.25	0.97	6.20
	3	Δ	200	303		0.87	
		Y	346	525		0.50	
180	1		230	277		0.97	8.00
	3	Δ	200	303		0.87	
		Y	346	525		0.50	

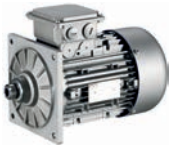

Blowers

Rated data for 50 Hz

Size	Number of phases	Connection method					
Motor							
			U_{min}	U_{max}	P_{max}	I_{max}	m
			[V]	[V]	[kW]	[A]	[kg]
200	1		230	277	0.25	0.97	8.00
	3	Δ	200	303		0.87	
		Y	346	525		0.50	
225		Δ	200	400	0.28	1.10	15.0
		Y	346	525	0.17	0.35	

Rated data for 60 Hz

Size	Number of phases	Connection method					
Motor							
			U_{min}	U_{max}	P_{max}	I_{max}	m
			[V]	[V]	[kW]	[A]	[kg]
063	1		230	277	0.032	0.12	2.00
	3	Δ	220	332	0.028	0.10	
		Y	380	575		0.060	
071	1		230	277	0.033	0.12	2.10
	3	Δ	220	332	0.029	0.10	
		Y	380	575		0.060	
080	1		230	277	0.037	0.14	2.30
	3	Δ	220	332	0.034	0.10	
		Y	380	575		0.060	
090	1		220	277	0.065	0.25	2.70
	3	Δ		332	0.077	0.33	
		Y	380	575		0.19	
100	1		220	277	0.075	0.30	3.00
	3	Δ		332	0.087	0.31	
		Y	380	575		0.18	
112	1		220	277	0.094	0.37	3.10
	3	Δ		332	0.10	0.31	
		Y	380	575		0.18	
132	1		230	277	0.15	0.57	4.20
	3	Δ	220	332		0.44	
		Y	380	575		0.25	
160		Δ	220	332	0.36	0.93	6.20
		Y	380	575		0.56	
180		Δ	220	332		0.93	8.00
		Y	380	575		0.56	
200		Δ	220	332		0.93	
		Y	380	575		0.56	
225		Δ	220	400	0.28	0.76	15.0
		Y	380	575	0.26	0.43	



Temperature monitoring

► The thermal sensors are integrated in the windings. The use of an additional motor protection switch is recommended.

TKO thermal contacts

Function	Operating temperature	Min. reset temperature	Max. reset temperature	Max. input current	Max. input voltage
					AC
	T	T_{min}	T_{max}	$I_{in,max}$	$U_{in,max}$
	-5 ... 5				
	[°C]	[°C]	[°C]	[A]	[V]
NC contact	150	90.0	135	2.50	250

PTC thermistor

Function	Operating temperature	Rated resistance			Standard
		155 °C	-20 °C	140 °C	
	T	R_N	R_N	R_N	
	-5 ... 5				
	[°C]	[Ω]	[Ω]	[Ω]	
Sudden change in resistance	150	550	30.0	250	DIN 44080 DIN VDE 0660 Part 303

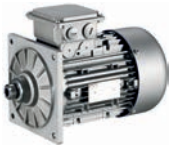

Temperature monitoring

KTY temperature sensor

	Function	Rated resistance			Max. input current	
		25 °C	150 °C	170 °C	25 °C	170 °C
		R_N	R_N	R_N	$I_{in,max}$	$I_{in,max}$
		[Ω]	[Ω]	[Ω]	[A]	[A]
KTY83-110	Continuous resistance change	1000	2225	2471	0.010	0.002
KTY84-130	Continuous resistance change	603	1334	1482	0.010	0.002

Variation of resistance

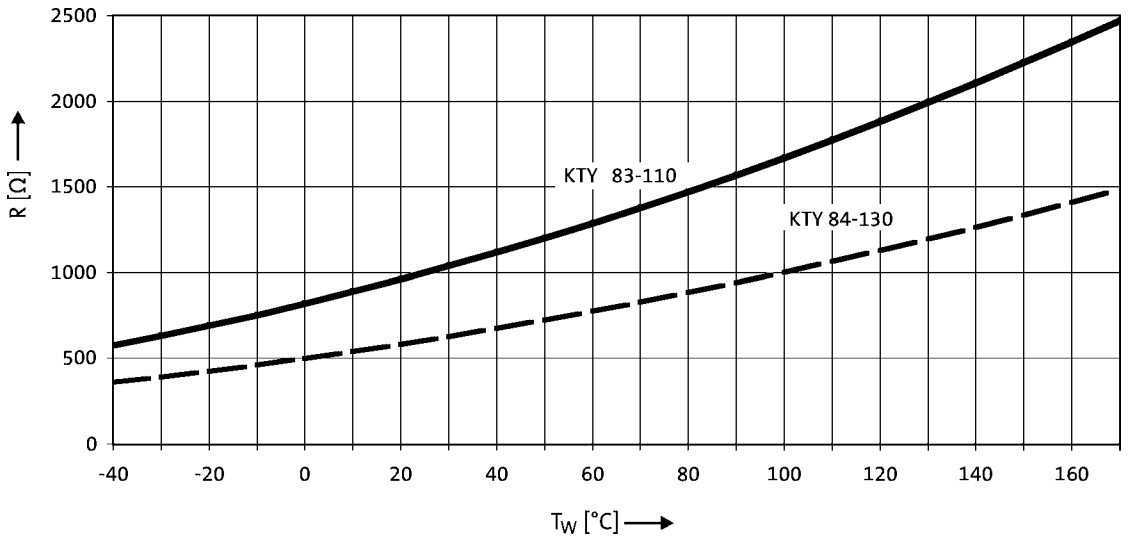

► If the detector is supplied with a measured current of 1 mA, the above relationship between the temperature and the resistance applies.



Terminal box

The MF three-phase AC motors are designed specifically for inverter operation. With a base frequency of 120Hz, the rated voltage has been specified at approximately 200 V in delta connection (up to 2.2 kW) and approximately 350V in star configurations.

In the standard version, the motors are connected in the terminal box. As an option, the motors are also available with the connectors described on the following pages as long as the permissible ratings are not exceeded.

Motor terminal box - built-on accessories assignment: 4-pole / 6-pole motors

Motor type	M□□MAXX	M□□MARS M□□MAIG M□□MAAG	M□□MAZE
Motor frame size			
	Terminal box		
063-32 063-42	KK1	KK2	
071-32 071-42	KK1	KK2	KK2
080-32 080-42	KK1	KK2	KK2
090-32	KK1	KK2	KK2
100-12 100-32	KK1	KK2	KK2
112-22	KK1	KK2	KK2
132-12 132-22 132-32	KK1	KK3	KK3

Motor type	M□□MABR	M□□MABS M□□MABI M□□MABA	M□□MABZ
Motor frame size			
	Terminal box		
063-32 063-42	KK2	KK3	
071-32 071-42	KK2	KK3	KK2
080-32 080-42	KK2	KK3	KK2
090-32	KK2	KK3	KK2
100-12 100-32	KK2	KK3	KK2
112-22	KK2	KK3	KK2
132-12 132-22 132-32	KK3	KK3	KK3

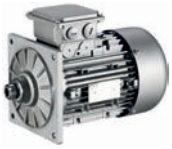

Terminal box

Dimensions of KK1

- For motors with motor terminal box KK1, the connector position can be selected in accordance with the terminal box position.
- If preferred positions are not specified in the order, the cable entry will be positioned as circled on the diagram below.

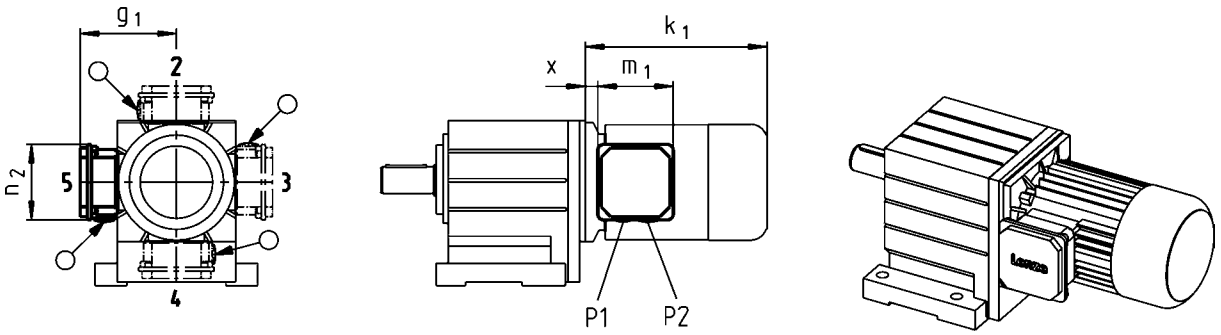

Size						
Motor						
	x	g_1	m_1	n_2	P_1	P_2
	[mm]	[mm]	[mm]	[mm]	[mm]	[mm]
063	21 12 [1)]	100 117 [1)]	75.0 93.0 [1)]	75.0 93.0 [1)]	M16x1.5 M20x1.5 [1)]	M20x1.5 M20x1.5
071	24 15 [1)]	109 126 [1)]				
080	14	150	115	115	M20x1.5	M25x1.5
090	19	157				
100	20	166				
112	22	176				
132	33	195	122	122	M32x1.5	M32x1.5

[1)] UL/CSA approval: cURus

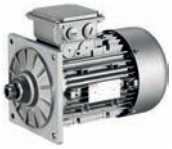

Terminal box

Cable entry position when using KK1

Terminal box in position 2

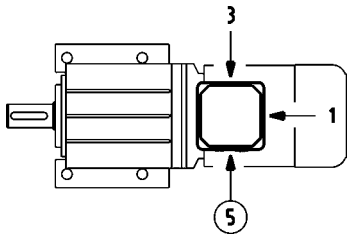

Terminal box in position 3

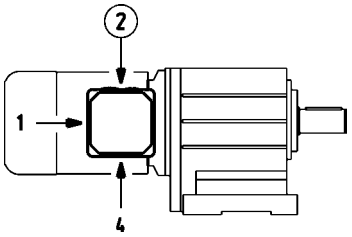

Terminal box in position 4

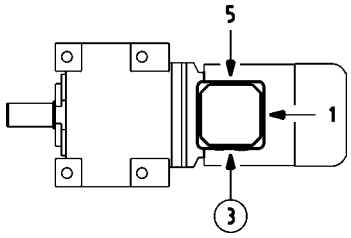

Terminal box in position 5

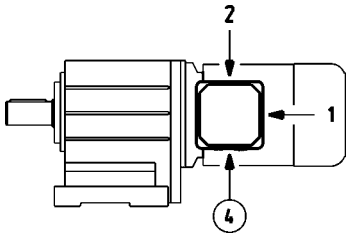

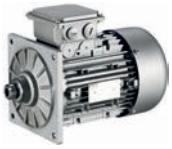

Terminal box

Dimensions of KK2

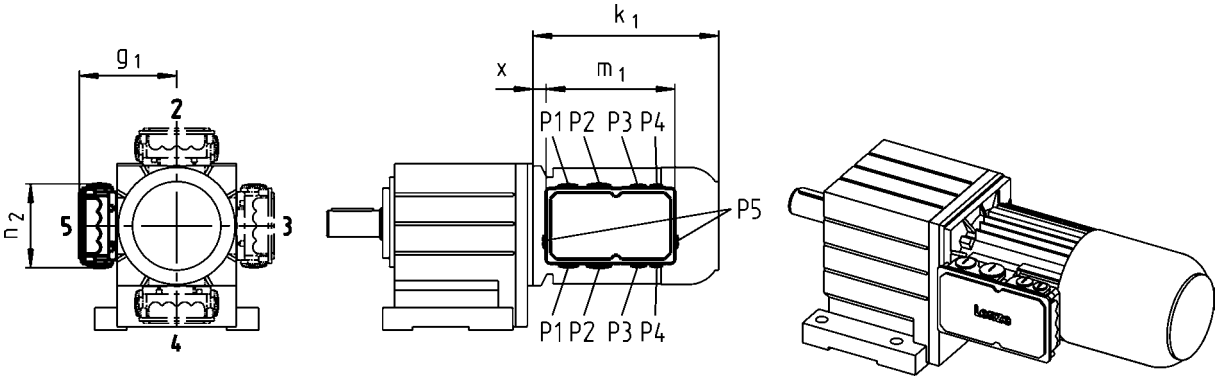

Size						
Motor						
	x	g_1	m_1	n_2	P_1	P_2
	[mm]	[mm]	[mm]	[mm]	[mm]	[mm]
063	13	107	136	103	M16x1.5	M20x1.5
071	15	118				
080	17	132	152	121	M20x1.5	M25x1.5
090	22	137				
100	23	147				
112	25	158				



Terminal box

Dimensions of KK3

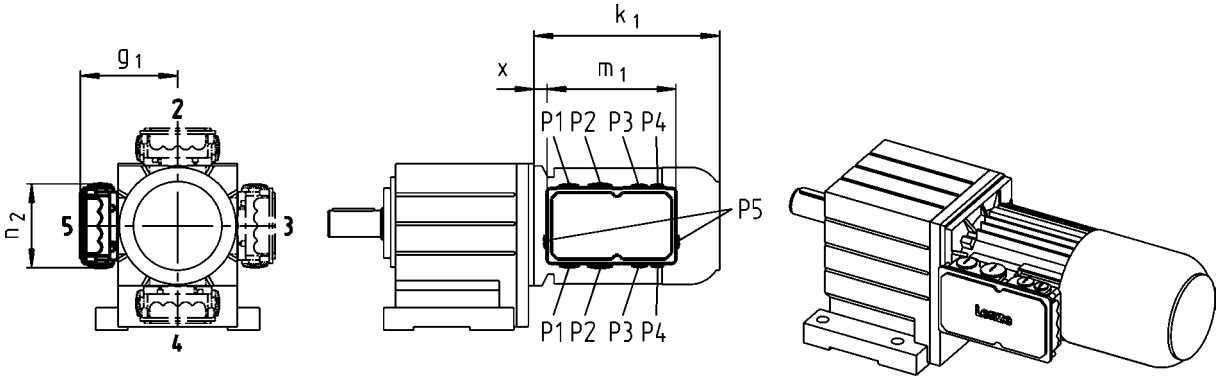

Size									
Motor									
	x	g_1	m_1	n_2	P_1	P_2	P_3	P_4	P_5
	[mm]	[mm]	[mm]	[mm]	[mm]	[mm]	[mm]	[mm]	[mm]
063	2	124	195	125	M25x1.5	M32x1.5	M20x1.5	M20x1.5	
071	5	133							
080	15	142							
090	20	147							
100	21	158							
112	23	168							
132	38	187							
160	35	210	226	127	M50x1.5	M16x1.5		M16x1.5	
180	73	230							
225	95	346	354	205		M63x1.5 [1)]	M50x1.5 [1)]		M16x1.5

[1)] Cable entry only possible at one position.
Terminal box position 2: cable entry at position 5.
Terminal box position 3: cable entry at position 2.
Terminal box position 4: cable entry at position 3.
Terminal box position 5: cable entry at position 4.

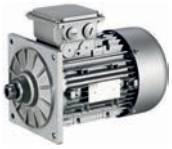

Plug connectors

ICN, HAN and M12 connectors (only for IG128-24V-H incremental encoder) are available for the three-phase AC motors.

ICN connector

A connector is used for power, brake and temperature monitoring. The connections to the feedback system and the blower each employ a separate connector.

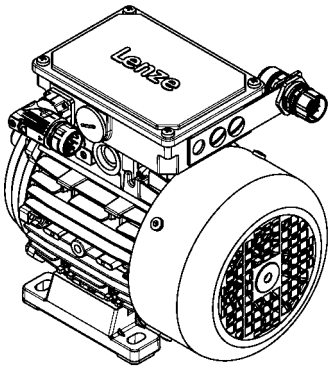

Connection for power, brake and temperature monitoring

The connectors can be rotated through 270° and are fitted with a bayonet catch for SpeedTec connectors. As this connector is also compatible with conventional union nuts, existing mating connectors can continue to be used without difficulty. The motor connection is determined in the terminal box and must be checked before commissioning.

► ICN 6-pole

Pin assignment			
Contact	Designation	Meaning	
1	BD1 / BA1	Brake +/AC	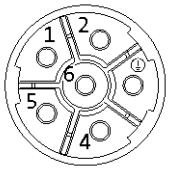
2	BD2 / BA2	Brake /AC	
PE	PE	PE conductor	
4	U	Phase U power	
5	V	Phase V power	
6	W	Phase W power	

► ICN 8-pole

Pin assignment			
Contact	Designation	Meaning	
1	U	Phase U power	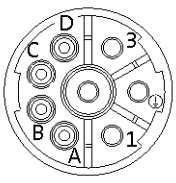
PE	PE	PE conductor	
3	V	Phase V power	
4	W	Phase W power	
A	TB1 / TP1 / R1	Thermal sensor: TKO/PTC/ +KTY	
B	TB2 / TP2 / R2	Thermal sensor: TKO/PTC/-KTY	
C	BD1 / BA1	Brake +/AC	
D	BD2 / BA2	Brake /AC	

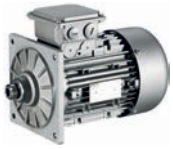

ICN connector

Feedback connection

All encoder systems (apart from IG128-24V-H) are also available with an ICN connector fixed to the motor terminal box for exceptionally fast commissioning. The connectors are fitted with a bayonet fixing, which is also compatible with conventional union nuts. Existing mating connectors can therefore continue to be used without difficulty.

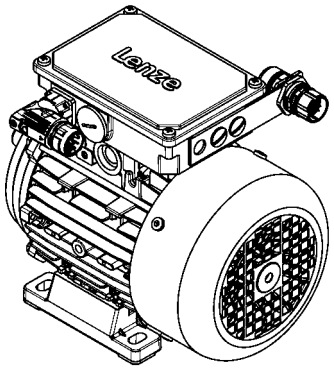

► Resolver

Pin assignment			
Contact	Designation	Meaning	
1	+Ref	Transformer windings	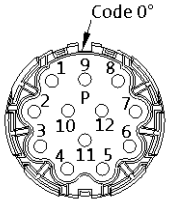
2	-Ref		
3	+VCC ETS	Supply: Electronic nameplate	
4	+COS	Cosine stator windings	
5	-COS		
6	+SIN	Sine stator windings	
7	-SIN		
8		Not assigned	
9			
10			
11	+KTY	KTY temperature sensor	
12	-KTY		

► Hiperface incremental encoder and SinCos absolute value encoder

Pin assignment			
Contact	Designation	Meaning	
1	B	Track B/+SIN	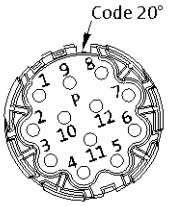
2	A^-	Track A inverse/-COS	
3	A	Track A/+COS	
4	$+U_B$	Supply +	
5	GND	Mass	
6	Z^-	Zero track inverse/-RS485	
7	Z	Zero track/+RS485	
8		Not assigned	
9	B^-	Track B inverse/-SIN	
10		Not assigned	
11	+KTY	KTY temperature sensor	
12	-KTY		

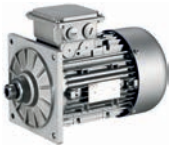

ICN connector

Motor terminal box with ICN connectors - built-on accessories assignment: 4-pole / 6-pole motors

Motor type	M□□MAXX	M□□MARS M□□MAIG M□□MAAG	M□□MAZE
Motor frame size			
	Terminal box		
063-32 063-42	KK1	KK2	
071-32 071-42	KK1	KK2	KK2
080-32 080-42	KK1	KK2	KK2
090-32	KK1	KK2	KK2
100-12 100-32	KK1	KK2	KK2

Motor type	M□□MABR	M□□MABS M□□MABI M□□MABA	M□□MABZ
Motor frame size			
	Terminal box		
063-32 063-42	KK2	KK3	
071-32 071-42	KK2	KK3	KK2
080-32 080-42	KK2	KK3	KK2
090-32	KK2	KK3	KK2
100-12 100-32	KK2	KK3	KK2



ICN connector

Dimensions of KK1

- For motors with connectors, the connector position can be selected in accordance with the terminal box position.
- If preferred positions are not specified in the order, the connector will be positioned as circled on the diagram below.

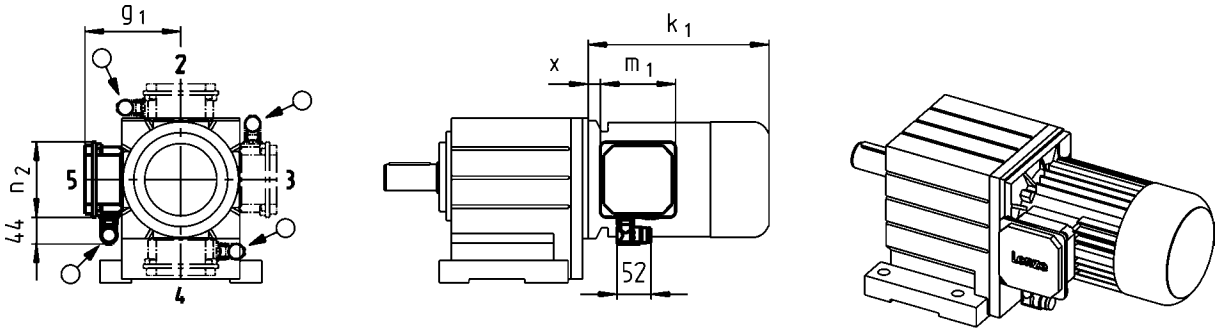

Size				
Motor				
	x	g_1	m_1	n_2
	[mm]	[mm]	[mm]	[mm]
063	12	117	93.0	93.0
071	15	126		
080	14	150	115	115
090	19	157		
100	20	166		
112	22	176		
132	33	195	122	122

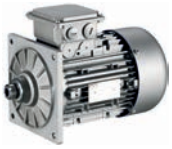

ICN connector

Connector position when using KK1

Terminal box in position 2

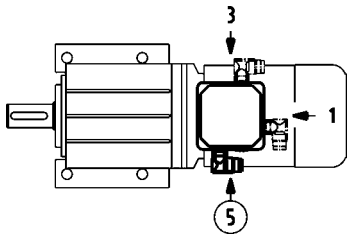

Terminal box in position 3

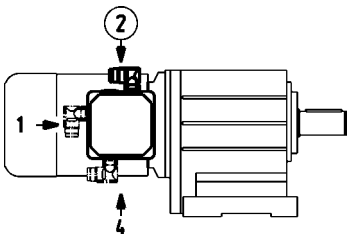

Terminal box in position 4

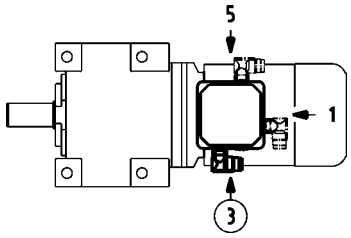

Terminal box in position 5

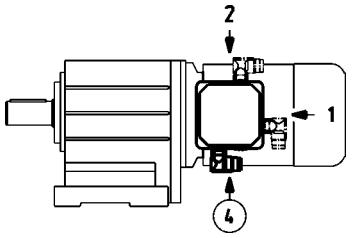



ICN connector

Dimensions of KK2/KK3

- For motors with connectors, the connector position can be selected in accordance with the terminal box position.
- If preferred positions are not specified in the order, the connector will be positioned as circled on the diagram below.

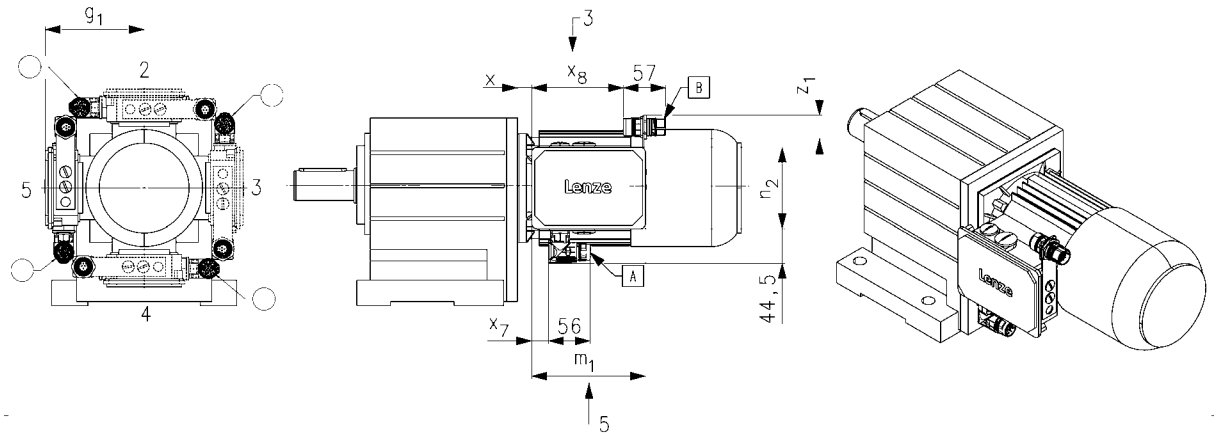

Size							
Motor							
	x	g_1	m_1	n_2	x_7	x_8	$z_{1, max}$
	[mm]	[mm]	[mm]	[mm]	[mm]	[mm]	[mm]
063	13	107	136	103	16	109	43
071	15	118					
080	17	132	152	121	23	125	41
090	22	137					
100	23	147					
112	25	158					
132	38	187	195	125	27	166	71

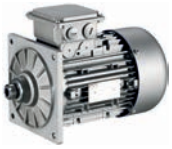

ICN connector

Connector position when using KK2/KK3

Terminal box in position 2

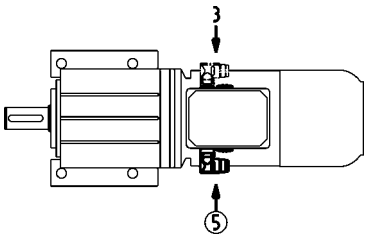

Terminal box in position 3

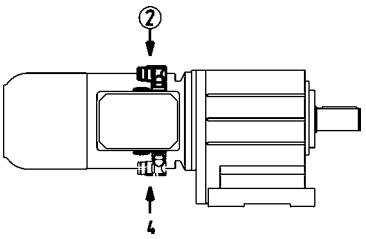

Terminal box in position 4

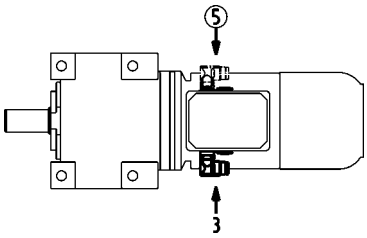

Terminal box in position 5

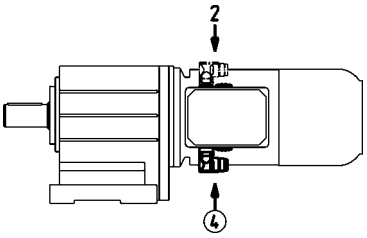

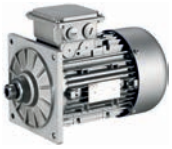

ICN connector

Blower connection

The blower is also optionally available with an ICN connector fixed to the terminal box of the blower for exceptionally fast commissioning. The connectors are fitted with a bayonet fixing, which is also compatible with conventional union nuts. Existing counter plugs can therefore continue to be used without difficulty.

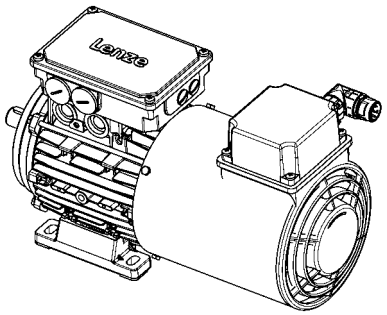

► Blower 1-ph

Pin assignment			
Contact	Designation	Meaning	
PE	PE	PE conductor	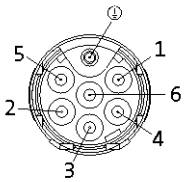
1	U1	Fan	
2	U2		
3		Not assigned	
4			
5			
6			

► Blower 3-ph

Pin assignment			
Contact	Designation	Meaning	
PE	PE	PE conductor	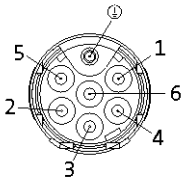
1	U	Phase U power	
2		Not assigned	
3	V	Phase V power	
4		Not assigned	
5			
6	W	Phase W power	

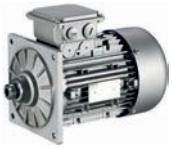

ICN connector

Dimensions of blower

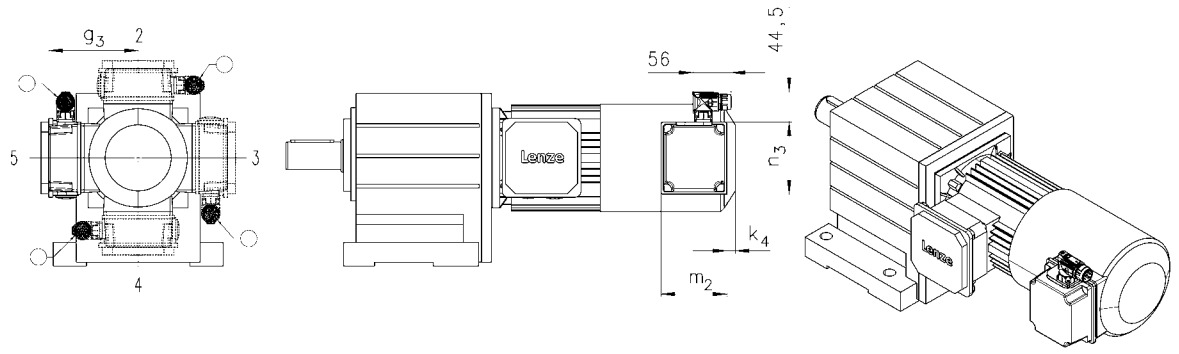

Size				
Motor				
	k_4	g_3	m_2	n_3
	[mm]	[mm]	[mm]	[mm]
063	12	115	95	105
071		122		
080	13	132	96	106
090	22	141	95	105
100		150		
112		162		
132	32	182		
160	31	209	96	106
180				
225				

► In addition, the cover of the blower terminal box (including connectors) can be rotated progressively through 90° if necessary.

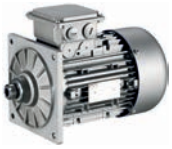

M12 connector

IG128-24V-H incremental encoder connection

As a standard this incremental encoder is equipped with a connection cable of about 0.5 m length and with a common industry standard M12 connector at its end.

Pin assignment			
Contact	Designation	Meaning	
1	$+U_B$	Supply +	
2	B	Track B	
3	GND	Mass	
4	A	Track A	

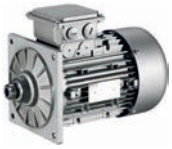

HAN connector

10E

In the case of the rectangular HAN-10E connectors, all six ends of the three winding phases are taken out to the power contacts. The motor circuit is therefore determined in the mating connector.

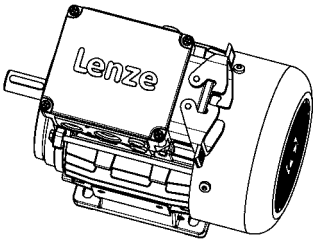

Pin assignment	
Contact	Meaning
1	Terminal board: U1
2	Terminal board: V1
3	Terminal board: W1
4	Brake +/AC
5	Brake -/AC
6	Terminal board: W2
7	Terminal board: U2
8	Terminal board: V2
9	Thermal sensor: +KTY/PTC/TKO
10	Thermal sensor: KTY/PTC/TKO

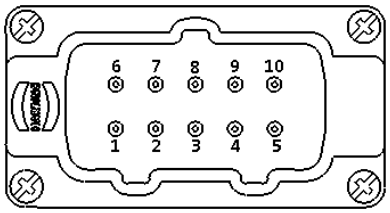

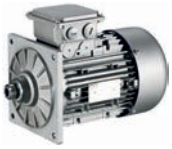

HAN connector

Modular

The connector is available with two different power modules (16 A or 40 A), depending on the rated motor current. The motor connection is determined in the terminal box and must be checked before commissioning.

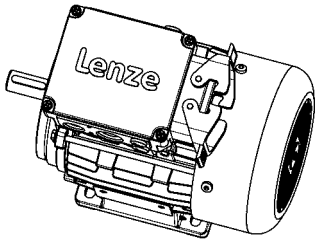

► HAN modular 16 A

Pin assignment			
Module	Contact	Meaning	
A	1	Terminal board: U1	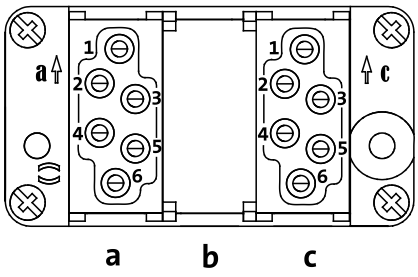
	2	Terminal board: V1	
	3	Terminal board: W1	
B		Dummy module	
C	1	Thermal sensor: +KTY/PTC/TKO	
	2	Brake +/AC	
	3	Brake -/AC	
	4	Rectifier: Switching contact	
	5		
	6	Thermal sensor: KTY/PTC/TKO	

► HAN modular 40 A

Pin assignment			
Module	Contact	Meaning	
A	1	Terminal board: U1	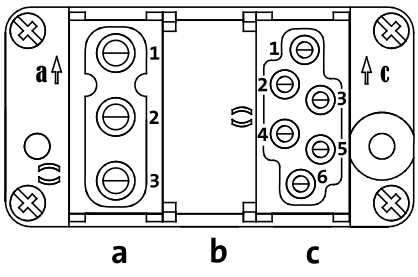
	2	Terminal board: V1	
	3	Terminal board: W1	
B		Dummy module	
C	1	Thermal sensor: +KTY/PTC/TKO	
	2	Brake +/AC	
	3	Brake -/AC	
	4	Rectifier: Switching contact	
	5		
	6	Thermal sensor: KTY/PTC/TKO	

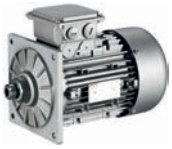

HAN connector

Motor type	M□□MAXX M□□MABR	M□□MAZE M□□MABZ
Motor frame size		
	Terminal box with HAN connector	
063-32 063-42	HAN-10E HAN modular	
071-32 071-42	HAN-10E HAN modular	HAN-10E HAN modular
080-32 080-42	HAN-10E HAN modular	HAN-10E HAN modular
090-32	HAN-10E HAN modular	HAN-10E HAN modular
100-12 100-32	HAN-10E HAN modular	HAN-10E HAN modular
112-22		
132-12 132-22 132-32	HAN modular	HAN modular

Motor terminal box with HAN connectors - built-on accessories assignment: 4-pole / 6-pole motors



HAN connector

Dimensions

- For motors with connectors, the connector position can be selected in accordance with the terminal box position.
- Unless the connector position is specified, it will be supplied in position 1.

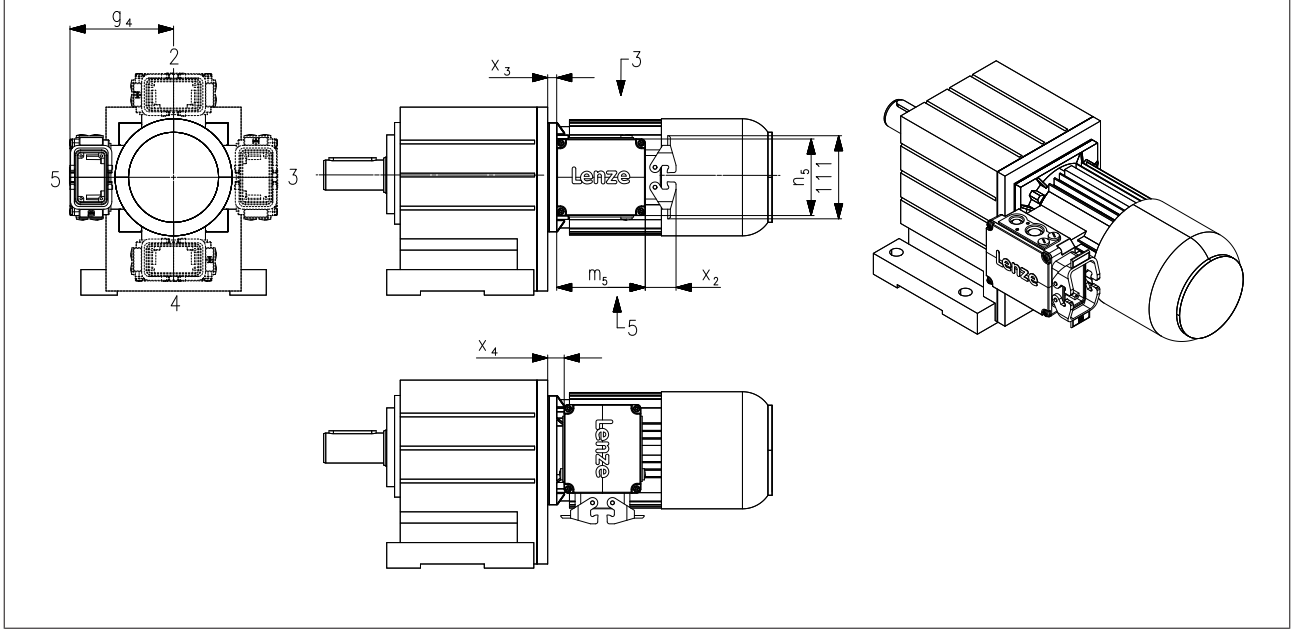

Size			
Motor			
	g_4	x_3	x_4
	[mm]	[mm]	[mm]
063	120	5.00	6.00
071	129	7.00	8.00
080	138	11.0	19.0
090	143	15.0	23.0
100	154	16.0	24.0
112	164	13.5	21.5
132	233	34.5	4.50
160	248	39.0	9.00

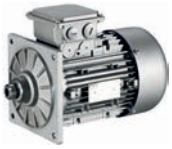

HAN connector

Position of connector

Connector in position 2	Connector in position 3
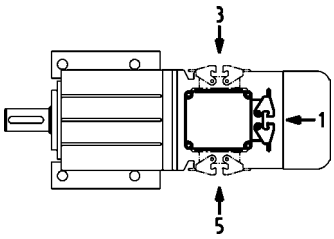	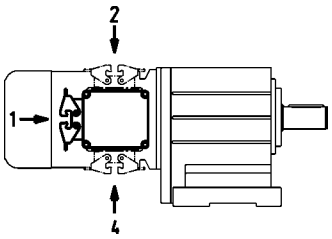

Connector in position 4	Connector in position 5
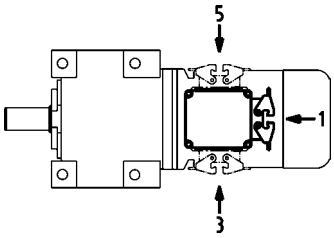	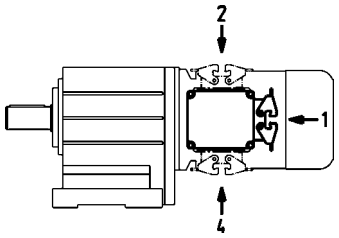



2nd shaft end

Dimensions, self-ventilated (4/6-pole)

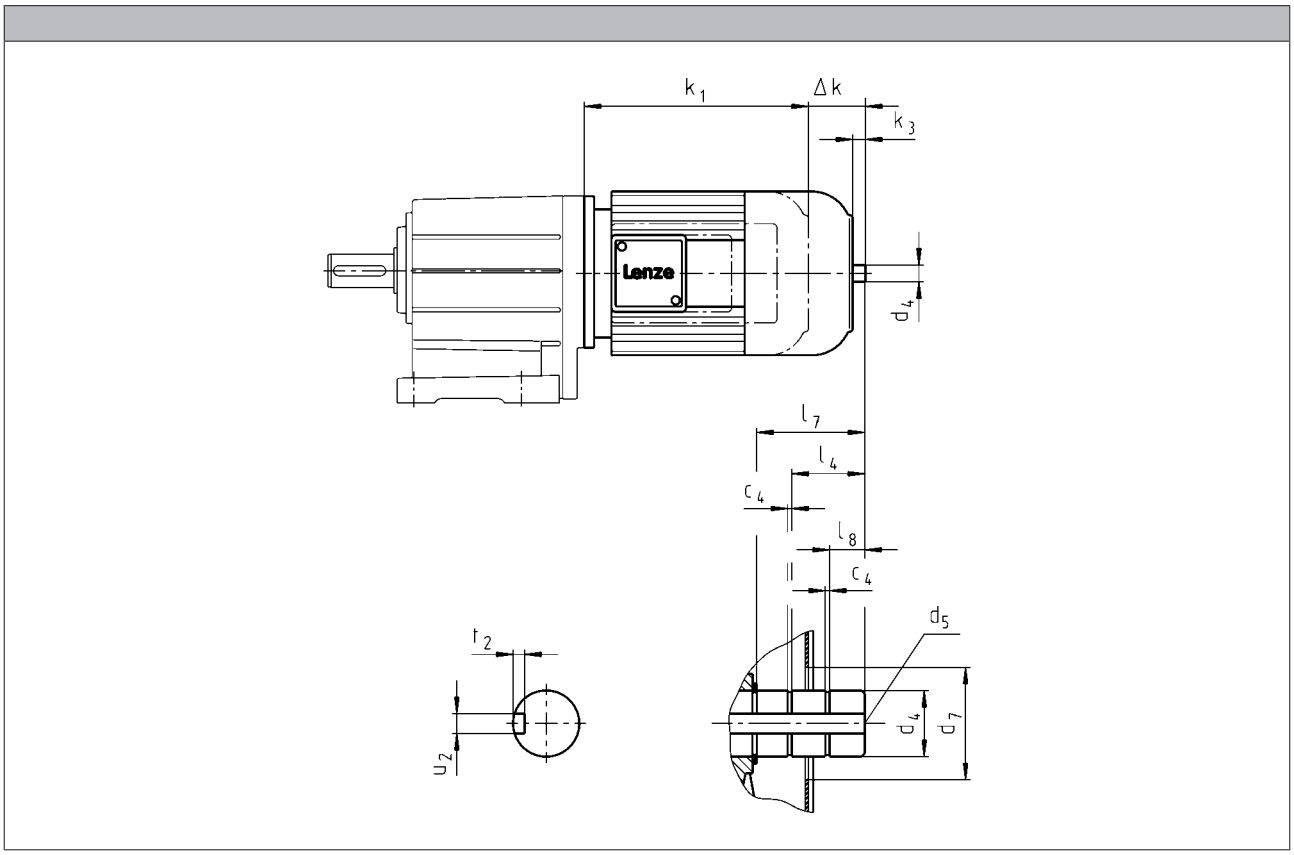

Motor type	
Built-on accessories	M□□MAZE M□□MABZ

Motor frame size												
	Δ k	k_3	c_4	d_4	d_4	d_5	d_7	l_4	l_7	l_8	u_2	t_2
				h6	j6							
	[mm]	[mm]	[mm]	[mm]	[mm]	[mm]	[mm]	[mm]	[mm]	[mm]	[mm]	[mm]
071-32 071-42	47	11.0	1.10	14.0		M5	34.0		19.0	3.00	5.00	3.00
080-32 080-42	68	9.00	1.10	14.0		M5	34.0		19.0	4.50	5.00	3.00
090-32	57	9.00	1.10	14.0		M5	34.0		19.0	5.00	5.00	3.00
100-12 100-32	71	18.5	1.30		20.0	M6	34.0	17.0	32.5	10.5	6.00	3.50
112-22	84	16.0	1.30		20.0	M6	34.0	17.0	28.5	7.00	6.00	3.50
132-12 132-22 132-32	101	24.5	1.60		30.0	M10	46.0	24.5	42.0	8.50	8.00	4.00

[1] During operation, appropriate measures must be taken to make fan cover opening safe.



Protection cover

Dimensions, self-ventilated (4/6-pole)

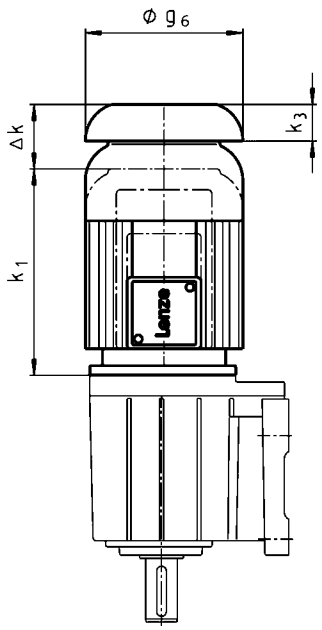

	Motor type					
	M□□MAXX	M□□MABR	M□□MABS M□□MABI M□□MABA	M□□MARS M□□MAIG M□□MAAG		

Motor frame size						
	Δ k	Δ k	Δ k	Δ k	k_3	g_6
	[mm]	[mm]	[mm]	[mm]	[mm]	[mm]
063-32 063-42	26	66	129	82	11.0	123
071-32 071-42	26	78	122	78	12.0	138
080-32 080-42	26	99	137	127	16.0	156
090-32	26	94	131	113	15.0	176
100-12 100-32	31	107	132	112	17.0	194
112-22	31	121	151	111	18.0	218
132-12 132-22 132-32	31	141	156	134	20.0	257



Protection cover

Dimensions, forced ventilated (4/6-pole)

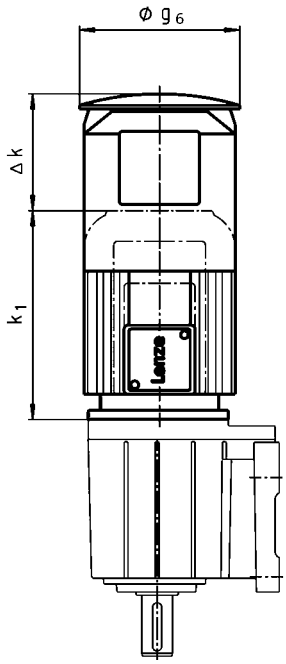

	Motor type			
	M□□MAXX	M□□MABR M□□MABS M□□MABI	M□□MARS M□□MAIG M□□MAAG	

Motor frame size				
	Δ k	Δ k	Δ k	g_6
	[mm]	[mm]	[mm]	[mm]
063-32 063-42	169	209	169	133
071-32 071-42	165	202	165	150
080-32 080-42	168	224	168	170
090-32	157	210	157	188
100-12 100-32	137	198	137	210
112-22	135	216	216	249
132-12 132-22 132-32	140	226	226	300

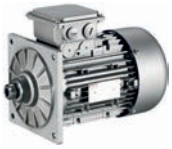

13449899

Lenze SE
Hans-Lenze-Straße 1
D-31855 Aerzen
Phone: +49 (0)5154 82-0
Telefax: +49 (0)5154 82 28 00

www.Lenze.com