L-force catalogue

Automation systems
Drive solutions

Controls
Inverter
Motors
Gearboxes
Engineering Tools

Motors: Lenze Smart Motor m300

Gearboxes: g500-H helical gearboxes, g500-S shaft-mounted helical gearbox, g500-B bevel gearbox

Lenze
As easy as that.

Contents of the L-force catalogue

About Lenze		Lenze makes many things easy for you.	
		A matter of principle: the right products for every application.	
		L-force product portfolio	
Automation systems		Controller-based Automation	1.1
		Drive-based automation	1.2
Drive solutions		HighLine tasks	2.1
		StateLine tasks	2.2
		BaseLine tasks	2.3
Controls	Visualisation	Panel PC v800	3.1
		Monitor v200	3.2
	Cabinet Controllers	Controller 3200 C	3.3
		Controller c300	3.4
	Panel Controllers	Controller p500	3.5
		Controller p300	3.6
		I/O System 1000	3.7
Inverter	Decentralised	Inverter Drives 8400 protec	4.1
		Inverter Drives 8400 motec	4.2
	Cabinet	Servo Drives 9400 HighLine	4.3
		Inverter Drives 8400 TopLine	4.4
		Servo-Inverter i700	4.5
		Inverter Drives 8400 HighLine	4.6
		Inverter Drives 8400 StateLine	4.7
		Inverter Drives 8400 BaseLine	4.8
Motors	Servo motors	MCS synchronous servo motors	5.1
		MCM synchronous servo motors	5.2
		MD□KS synchronous servo motors	5.3
		MQA asynchronous servo motors	5.4
		MCA asynchronous servo motors	5.5
	Three-phase AC motors	IE3 three-phase AC motors m500	5.6
		Inverter opt. three-phase AC motors MF	5.7
		IE2 MH three-phase AC motors	5.8
		IE1 MD three-phase AC motors	5.9
		Lenze Smart Motor m300	5.10
		IE3 three-phase AC motors m200	5.11
		IE1/2 three-phase AC motors Basic MD/MH	5.12
Gearboxes	Axial gearboxes	g700-P planetary gearbox	6.1
		MPR/MPG planetary gearboxes	6.2
		g500-H helical gearboxes	6.3
		g500-S shaft-mounted helical gearbox	6.4
	Right-angle gearboxes	g500-B bevel gearbox	6.5
	Motor data	Assignment see above	6.6
Engineering Tools		Navigator	7.1
		Drive Solution Designer	7.2
		Drive Solution Catalogue	7.3
		Engineer	7.4
		PLC Designer	7.5
		VisiWinNET®	7.6
		EASY Starter	7.7

Selected portfolio

Additional portfolio

Lenze makes many things easy for you.

With our motivated and committed approach, we work together with you to create the best possible solution and set your ideas in motion - whether you are looking to optimise an existing machine or develop a new one. We always strive to make things easy and seek perfection therein. This is anchored in our thinking, in our services and in every detail of our products. It's as easy as that!

1

Developing ideas

Are you looking to build the best machine possible and already have some initial ideas? Then get these down on paper together with us, starting with small innovative details and stretching all the way to completely new machines. Working together, we will develop an intelligent and sustainable concept that is perfectly aligned with your specific requirements.

2

Drafting concepts

We see welcome challenges in your machine tasks, supporting you with our comprehensive expertise and providing valuable impetus for your innovations. We take a holistic view of the individual motion and control functions here and draw up consistent, end-to-end drive and automation solutions for you - keeping everything as easy as possible and as extensive as necessary.

3

Implementing solutions

Our easy formula for satisfied customers is to establish an active partnership with fast decision making processes and an individually tailored offer. We have been using this principle to meet the ever more specialised customer requirements in the field of machine engineering for many years.

4

Manufacturing machines

Functional diversity in perfect harmony: as one of the few full-range providers in the market, we can provide you with precisely those products that you actually need for any machine task – no more and no less. Our L-force product portfolio, a consistent platform for implementing drive and automation tasks, is invaluable in this regard.

5

Ensuring productivity

Productivity, reliability and new performance peaks on a daily basis – these are our key success factors for your machine. After delivery, we offer you cleverly devised service concepts to ensure continued safe operation. The primary focus here is on technical support, based on the excellent application expertise of our highly-skilled and knowledgeable after-sales team.

A matter of principle: the right products for every application.

Lenze's extensive L-force product portfolio follows a very simple principle. The functions of our finely scaled products are assigned to the three lines Base-Line, State-Line or High-Line.

But what does this mean for you? It allows you to quickly recognise which products represent the best solution for your own specific requirements.

Powerful products with a major impact:
- Easy handling
- High quality and durability
- Reliable technologies in tune with the latest developments

Lenze products undergo the most stringent testing in our own laboratory. This allows us to ensure that you will receive consistently high quality and a long service life. In addition to this, five logistics centres ensure that the Lenze products you select are available for quick delivery anywhere across the globe. It's as easy as that!

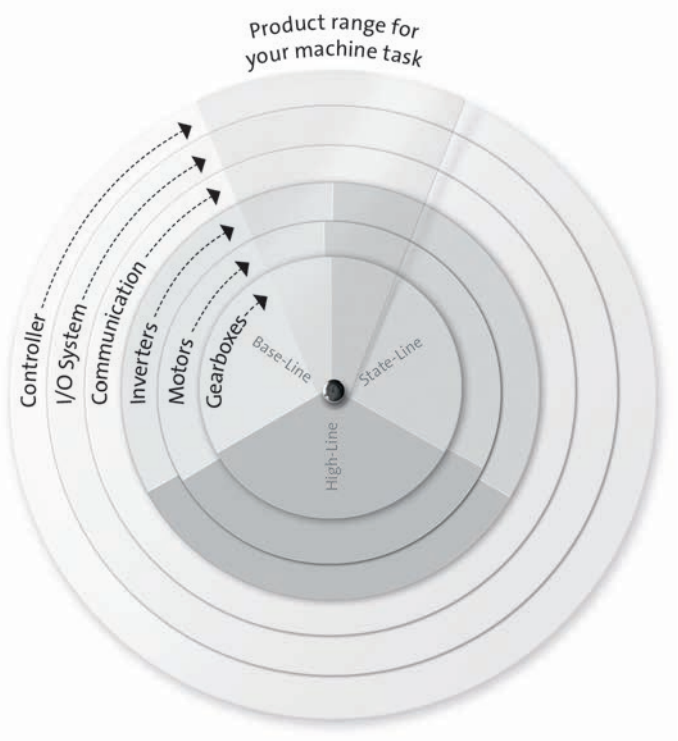

L-force product portfolio

Controls

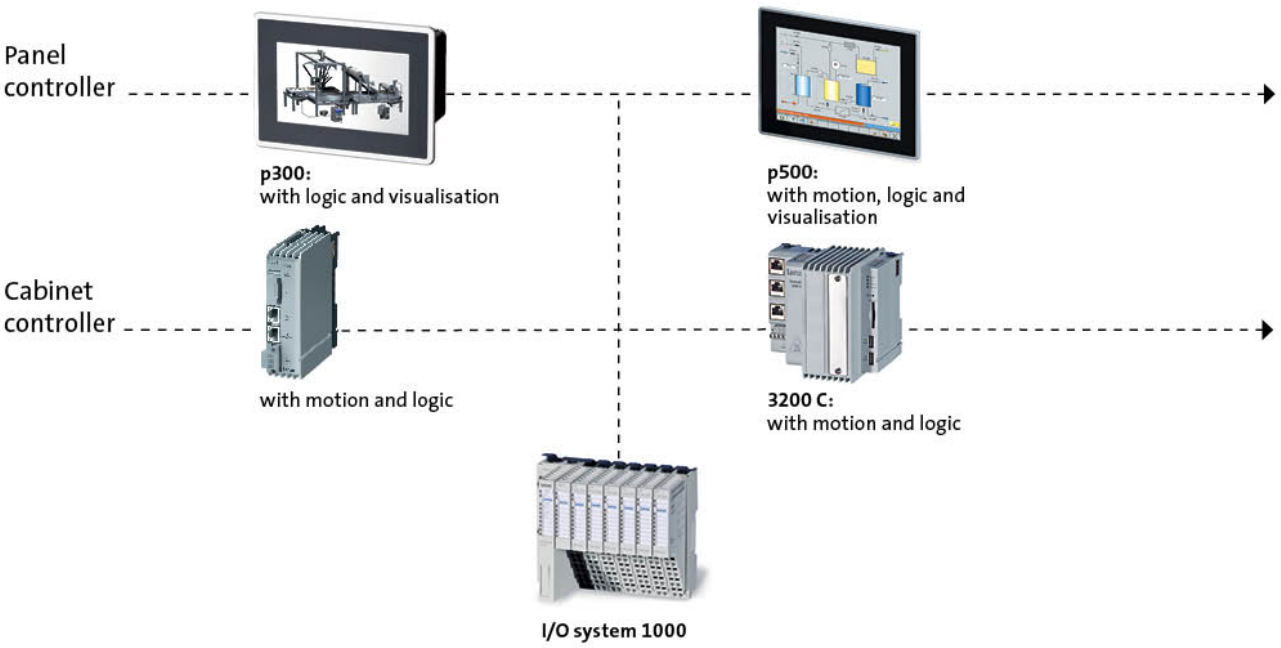

Engineering Tools

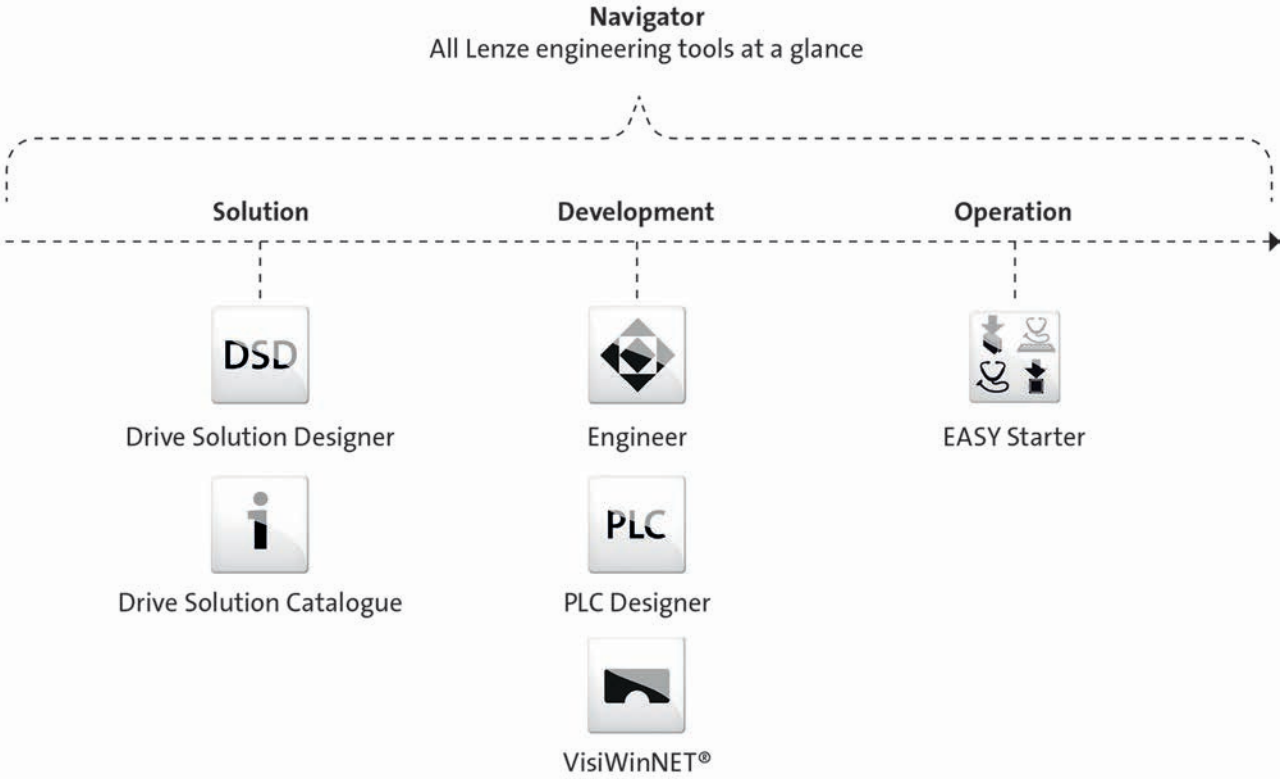

L-force product portfolio

Inverter

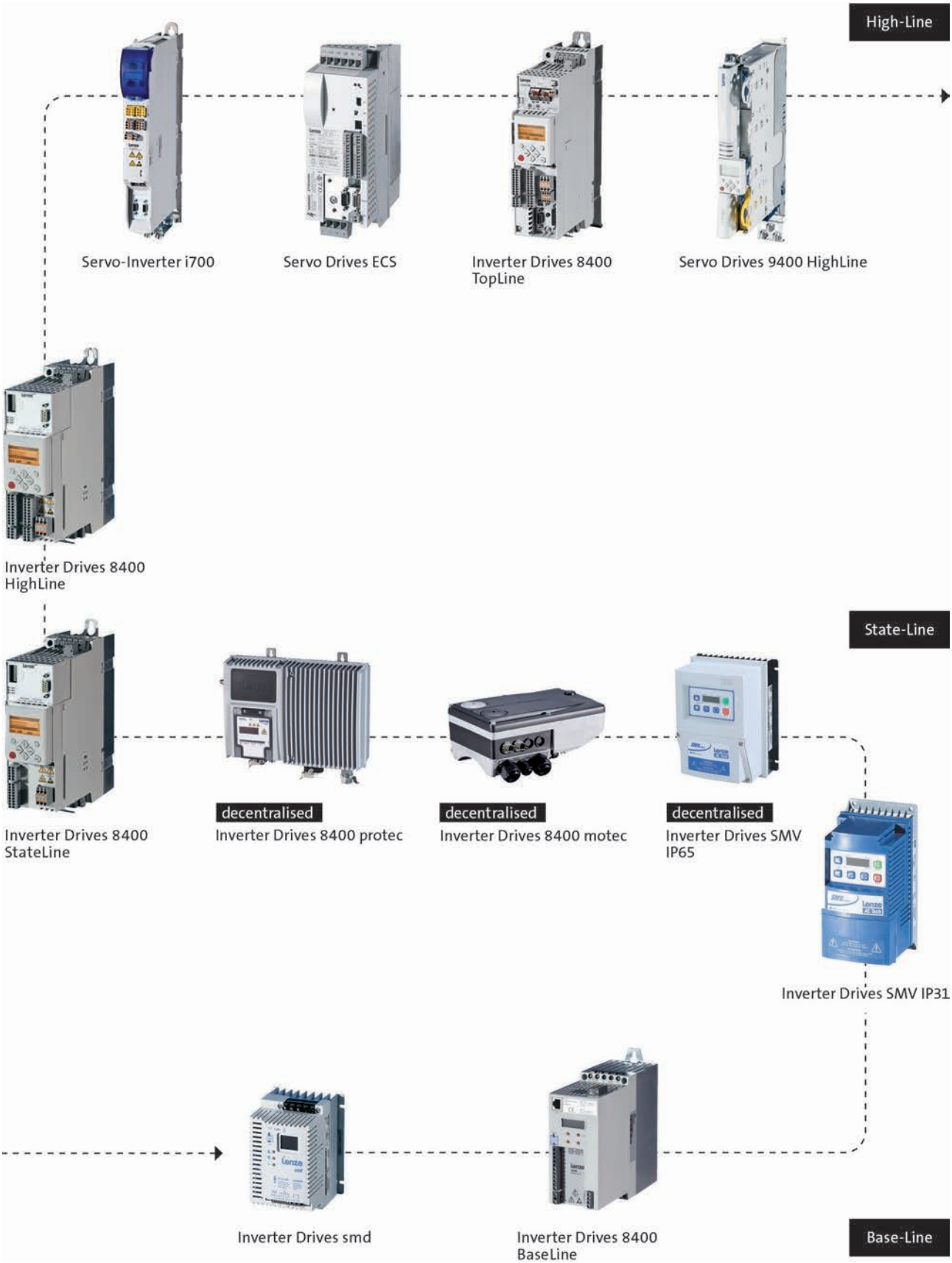

L-force product portfolio

Motors

High-Line

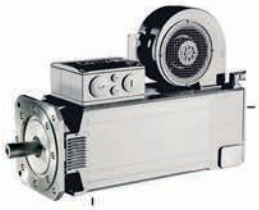

MQA asynchronous servo motors



SDSGS synchronous servo motors



MDXKS synchronous servo motors



Synchronous servo motors MCS



Asynchronous servo motors MCA



Asynchronous servo motors SDSGA

State-Line



MF three-phase AC motors



MH three-phase AC motors



MD three-phase AC motors



Basic MD/MH three-phase AC motors

Base-Line

L-force product portfolio

Gearboxes

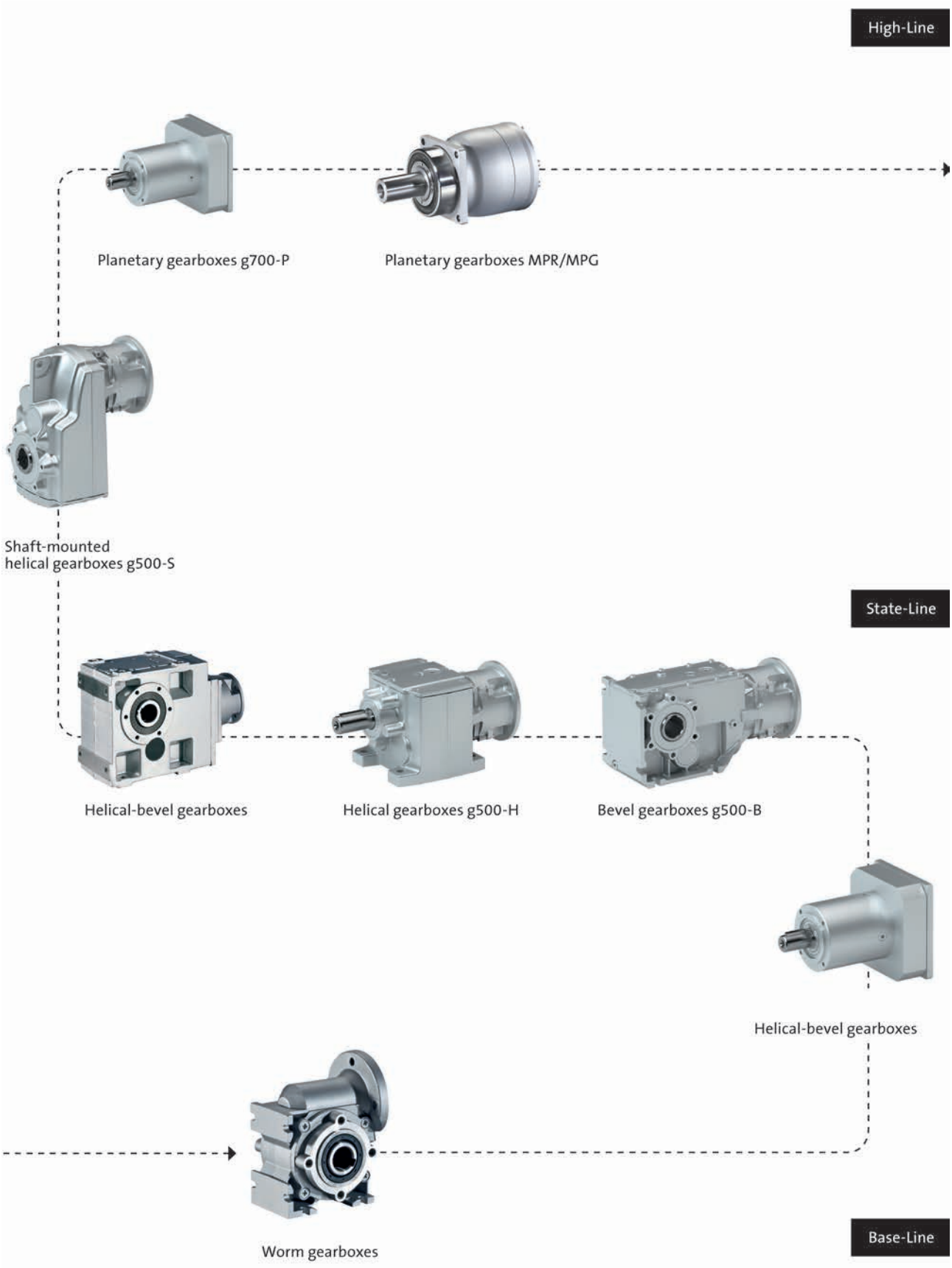

g500-H helical geared motors

4 to 426 Nm

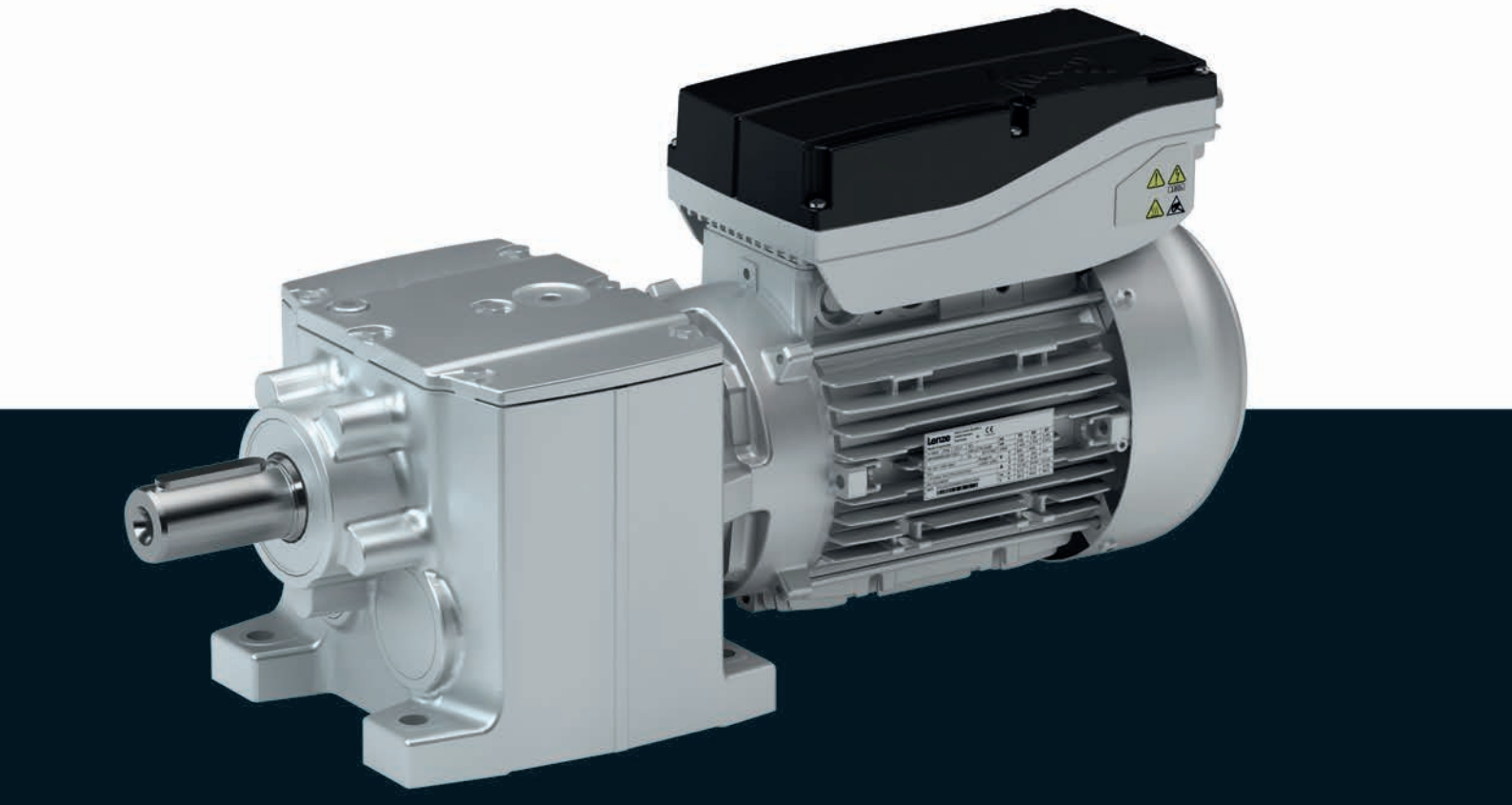

g500-H helical geared motors

Contents

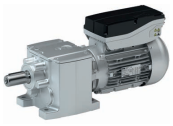

General information	List of abbreviations	6.3 - 5
	Product information	6.3 - 6
	Equipment	6.3 - 7
	The gearbox kit	6.3 - 8
	Dimensioning	6.3 - 14
Technical data	Selection tables, notes	6.3 - 17
	Selection tables	6.3 - 18
	Dimensions, notes	6.3 - 24
	Dimensions	6.3 - 25
	Weights	6.3 - 43
	Surface and corrosion protection	6.3 - 44

Contents

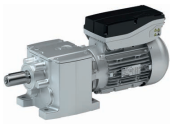

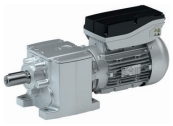

List of abbreviations

c		Load capacity
i		Ratio
m	[kg]	Mass
M_2	[Nm]	Output torque
M_{22}	[Nm]	Output torque
$M_{a_,1}$	[Nm]	Starting torque
$M_{a_,2}$	[Nm]	Starting torque
n_2	[r/min]	Output speed
n_{21}	[r/min]	Output speed
n_{22}	[r/min]	Output speed

CCC	China Compulsory Certificate
CE	Communauté Européenne
CSA	Canadian Standards Association
cURus	Combined certification marks of UL for the USA and Canada
DIN	Deutsches Institut für Normung e.V.
EMC	Electromagnetic compatibility
EN	European standard
GOST	Certificate for Russian Federation
IEC	International Electrotechnical Commission
IM	International Mounting Code
IP	International Protection Code
NEMA	National Electrical Manufacturers Association
UL	Underwriters Laboratory Listed Product
UR	Underwriters Laboratory Recognized Product
VDE	Verband deutscher Elektrotechniker (Association of German Electrical Engineers)

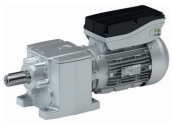

Product information

In combination with three-phase AC motors, our helical gearboxes form a compact and powerful drive unit. Numerous options at the input and output end provide for the drive to be exactly adapted to your application.

The robust helical gearboxes feature high permissible radial forces, closely stepped ratios and a low backlash. They are available in 2-pole and 3-pole design with a torque up to 450 Nm and a ratio of up to i= 370.

Versions

- Fine-scaling of size / torque provides for an optimum machine adaptation
- Standardised shaft and flange dimensions for an easy machine integration
- High efficiency
- With m300 Lenze Smart Motor, rated torque 1.75 Nm and 5 Nm

The product name

Gearbox type	Product range		Design	Rated torque [Nm]	Product
Helical gearbox	g500	-	H	45	g500-H45
				100	g500-H100
				140	g500-H140
				210	g500-H210
				320	g500-H320
				450	g500-H450

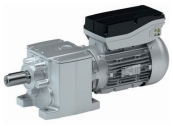

Equipment

Overview

The equipment includes all the options available as standard and all the built-on accessories of the product.

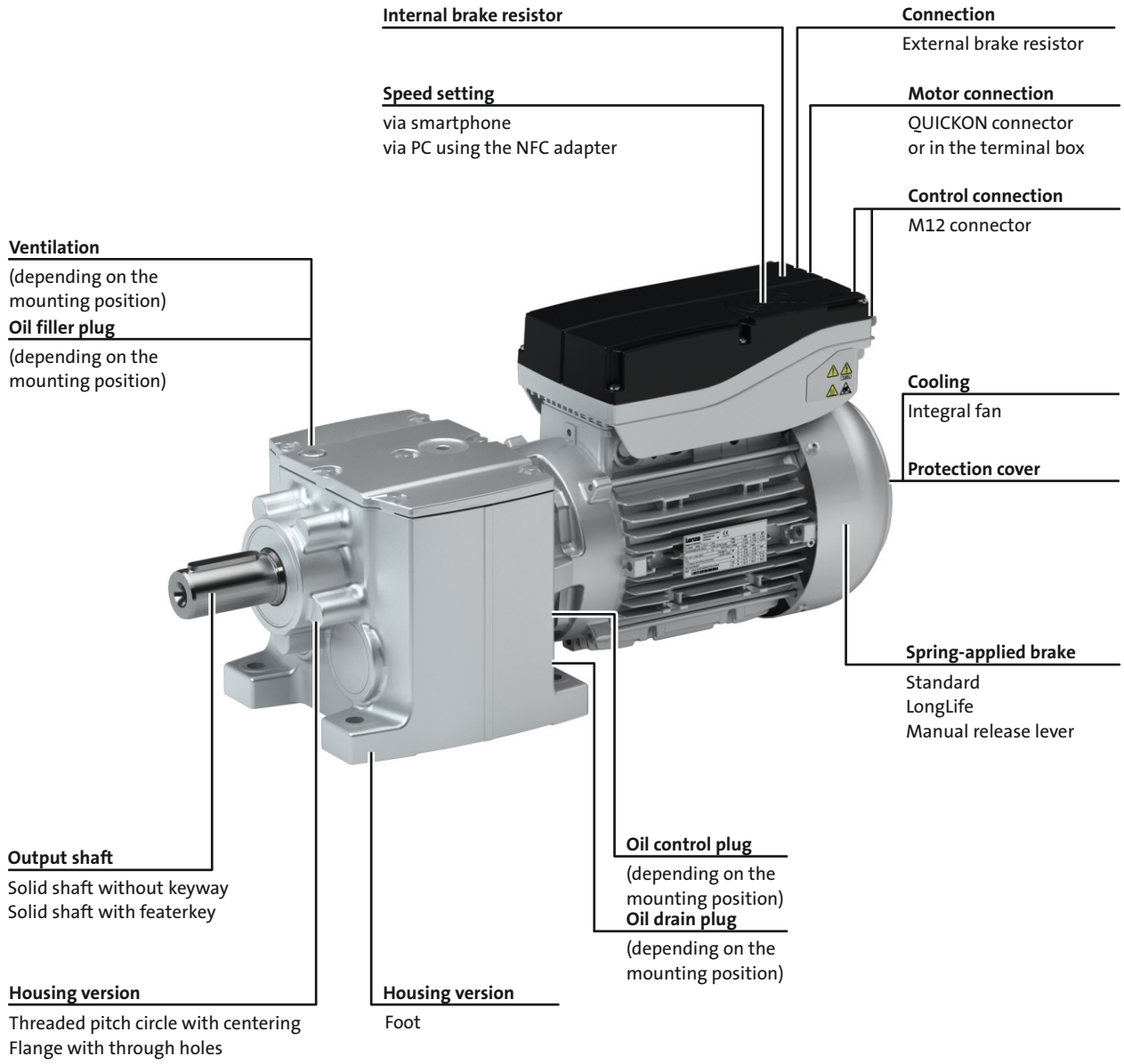

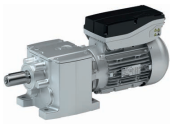

The gearbox kit

Geared motor

Product	g500-H45	g500-H100	g500-H140	g500-H210	g500-H320	g500-H450
Motor type	MSEMA AC motor					
Motor						
1.75 Nm	063					
5.0 Nm		080				
Technical data						
Starting torque $M_{a,1}$	See selection table					
Starting torque $M_{a,2}$	See selection table					
Output torque	See selection table					
Mains voltage	400 V ... 480 V					
Mains frequency	50 Hz ... 60 Hz					
Ratio	See selection table					
Mounting position						
Standard	A/B/C/D/E/F					
Combined	ABCDEF	AEF				
Colour	Not coated Primed Paint in various corrosion-protection designs in accordance with RAL colours					
Surface and corrosion protection	Without OKS(uncoated) OKS-G (primed) - OKS-M (medium) OKS-L (large)					

Motor parameter setting

Motor parameter	
Output speed n_{min}	See selection table
Output speed n_{max}	See selection table
Output speed 1	Between n_{min} and n_{max}
Direction of rotation	Clockwise/Counterclockwise
Output speed 2	Between n_{min} and n_{max}
Direction of rotation	Clockwise/Counterclockwise
Output speed 3	Between n_{min} and n_{max}
Direction of rotation	Clockwise/Counterclockwise
Output speed 4	Between n_{min} and n_{max}
Direction of rotation	Clockwise/Counterclockwise
Output speed 5	Between n_{min} and n_{max}
Direction of rotation	Clockwise/Counterclockwise
Acceleration time	0.1 to 20 s
Deceleration time	0.1 to 20 s
Energy saving mode	On/Off

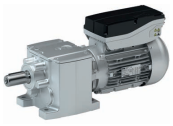

The gearbox kit

Mounting positions

► Mounting position (A to F) and position of system blocks (1 to 6)

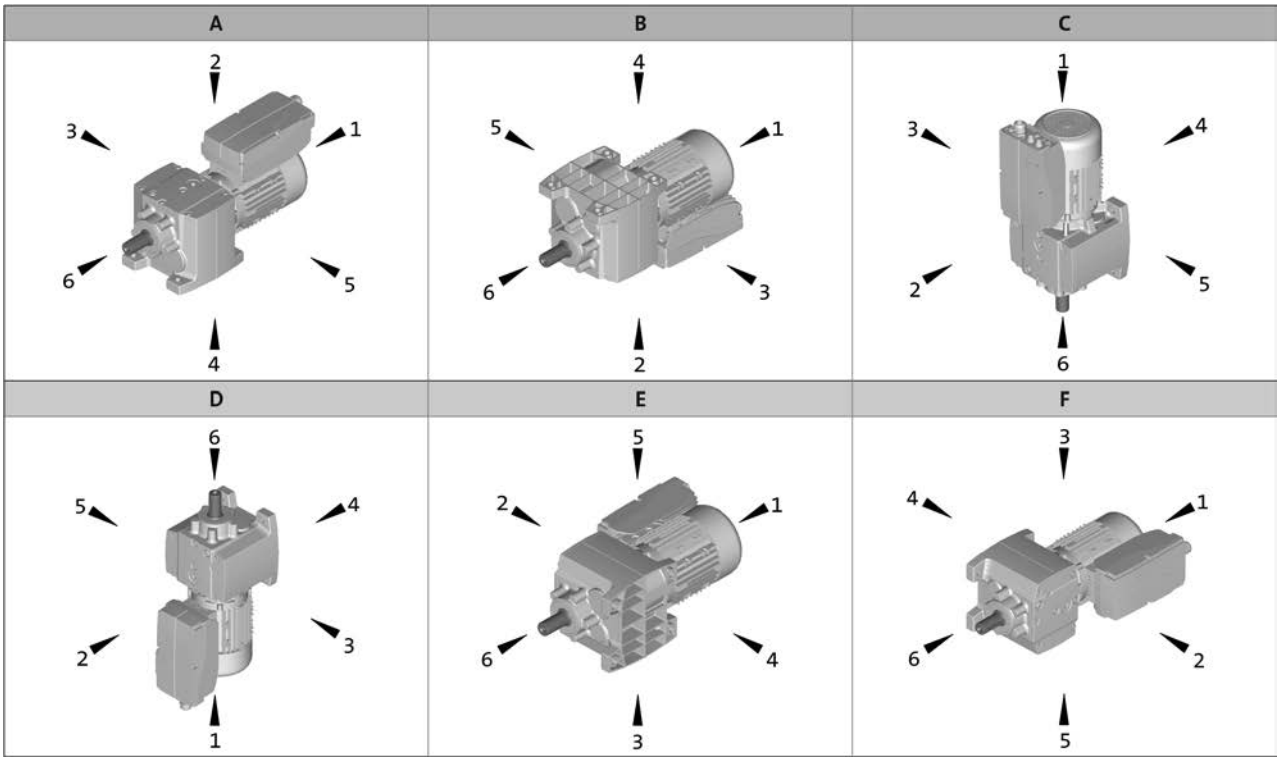

Terminal box: 2, 3, 4, 5

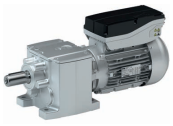

The gearbox kit

Motor details

Product	MSEMA□□	
	063-42	080-32
Enclosure	IP55	
Connection type	Terminal box QUICKON-connector	
Spring-applied brake		
Rated torque [Nm]	4	8
Brake design	Standard LongLife	
Options	Manual release lever	
Cooling	Integral fan	
Further options	Brake resistor	

► Further information and installation feasibilities can be found in the Motors chapter.

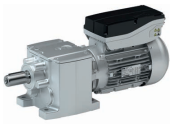

The gearbox kit

Motor details

Connection type
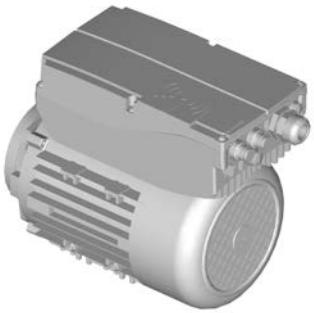 Terminal box 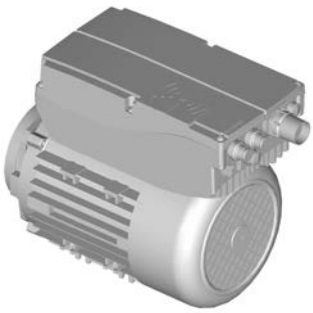 QUICKON-connector

Cooling: integral fan
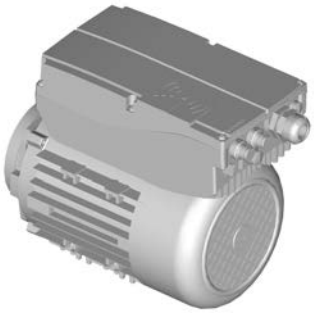 Without built-on accessories  With spring-applied brake With or without manual release lever

Further options
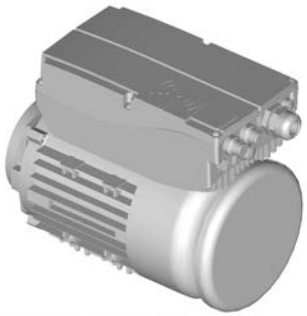 With protection cover

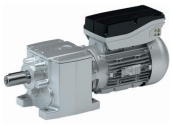

The gearbox kit

Gearbox details

Product	g500-H45	g500-H100	g500-H140	g500-H210	g500-H320	g500-H450
Driven shaft						
Solid shaft without keyway [mm]		20x40	25x50		30x60	35x70
Solid shaft with featherkey [mm]	14x28 20x40	20x40	25x50		30x60	30x60 35x70
Design	Standard stainless steel					
Gasket	Standard FPM (Viton)					
Bearing	Standard	Standard Reinforced				
Fitting grease	Not enclosed Enclosed					
Housing						
Housing version	With foot Without foot with centering	With foot With foot and centering Without foot with centering				
Output flange						
flange diameter [mm]	120/140/160			120/140/160/200	160/200	160/200/250
Lubricant						
Type	CLP 460 [1)] CLP HC 320 CLP HC 220 CLP HC 220 USDA H1					
Oil-level inspection	Without inspection With inspection					
Breather element	Without				Standard mounting position: Mounted Combined mounting position: loosely enclosed	
Backlash						
Backlash	Standard					

[1)] Not suitable for geared servo motors.

► Further information and installation feasibilities can be found in the Gearboxes chapter.

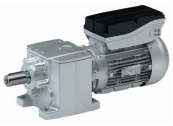

The gearbox kit

Gearbox details

Solid shaft		
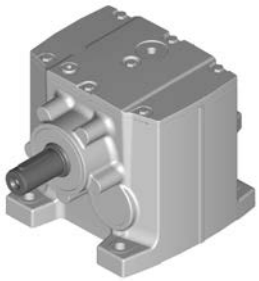	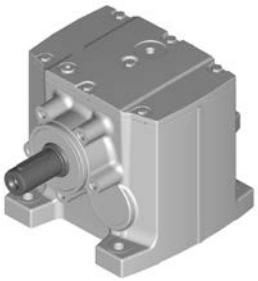	
Foot mounting	Foot mounting With centering	Foot mounting Flange with through holes

Solid shaft	
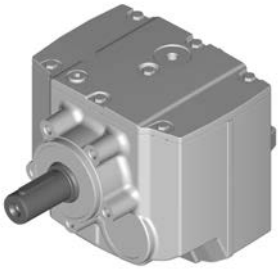	
With centering	Flange with through holes

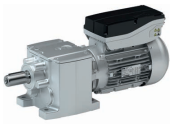

Dimensioning

General information about the data provided in this catalogue

The powers, torques and speeds specified in this catalogue are rounded values and are valid under the following conditions:

- Operating time/day = 8 h (100% OT)
- Duty class I for up to 10 switching operations/h
- Mounting positions and designs in this catalogue
- Standard lubricant
- T_{amb} = 20 °C for gearboxes,
  T_{amb} = 40 °C for motors (in accordance with EN 60034)
- Site altitude < = 1000 m amsl
- The selection tables provide the permissible mechanical powers and torques.
- The rated power specified for motors and geared motors applies to operating mode S1 (in accordance with EN 60034).

Under different operating conditions, the values obtained may vary from those listed here.
In the case of extreme operating conditions, please consult your Lenze sales office.

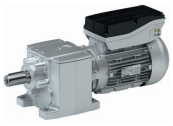

Dimensioning

Weights

The values given in the tables consider the following gearbox/motor combination:
- Gearbox with solid shaft without foot and flange including lubricant amount for mounting position A
- Motor without built-on accessories (with integral fan)

For versions deviating from this, additional weights have to be considered.

The respective values can be found for:
- Geared motors without built-on accessories
  > Chapter: Geared motors/Technical data
- Gearbox options
  > Chapter: Gearboxes/Technical data and accessories
- Motor options: Spring-applied brake, feedback, 2. Shaft end, handwheel and increased centrifugal mass
  > Chapter: Motors/Accessories

Moments of inertia

The given moments of inertia of the gearbox refer to the drive shaft. The influence of the ratio (i^2) has been considered in the data.

When the total moment of inertia of the geared motor is calculated, the values of the gearbox, motor and accessories have to be added.

The respective values can be found for:
- Gearboxes
  > Chapter: Gearbox/Technical data
- Motors without built-on accessories
  > Chapter: Motors/Technical data/Rated data
- Motor options: Spring-applied brake, feedback, 2. Shaft end, handwheel and increased centrifugal mass
  > Chapter: Motors/Accessories

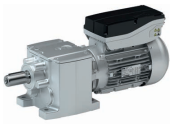

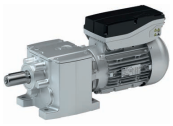

Selection tables, notes

Notes on the selection tables with 4-pole motors

The selection tables show the available combinations of gearbox type, number of stages, ratio and motor. They are used only to provide basic orientation.
The following legend indicates the structure of the selection tables.

Max. torque M_{max} of the drive motor

M_{max} = 7.0 Nm

2-stage gearbox ← **Number of the gear stage of the gearbox**

Mains operation						i	Product		
Min. output speed		Max. output speed		Starting torque			g500	MSEMA□□	
n_{21} [r/min]	M_2 [Nm]	n_2 [r/min]	M_2 [Nm]	$M_{a,1}$ [Nm]	$M_{a,2}$ [Nm]				
193	4.0	1001	4.0	18	23	2.597	-H45	063-42	23
149	6.0	775	6.0	23	40	3.354	-H100	063-42	26
147	6.0	762	6.0	19	24	3.413	-H45	063-42	23
115	7.0	595	7.0	21	26	4.368	-H45	063-42	23

n_{21} is the minimum speed where the torque **M_2** is permissible.

n_2 is the maximum speed where the torque **M_2** is permissible.

Maximally permissible starting torque which is available for up to 20 million switching cycles

Maximally permissible starting torque which is available for up to 500,000 switching cycles

Ratio i

Product Gearbox

Product Motor

Page number for dimensions

Torque diagram

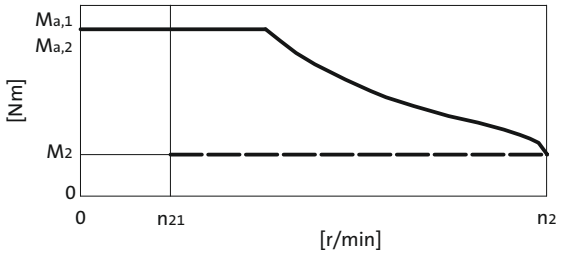

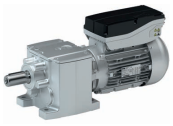

Selection tables

M_{max} = 7.0 Nm

2-stage gearboxes

Mains operation						i	Product		
Min. output speed		Max. output speed		Starting torque					
n_{21} [r/min]	M_2 [Nm]	n_2 [r/min]	M_2 [Nm]	$M_{a,1}$ [Nm]	$M_{a,2}$ [Nm]		g500	MSEMA□□	
193	4.0	1001	4.0	18	18	2.597	-H45	063-42	25
149	6.0	775	6.0	23	23	3.354	-H100	063-42	28
147	6.0	762	6.0	19	23	3.413	-H45	063-42	25
115	7.0	595	7.0	21	26	4.368	-H45	063-42	25
94	9.0	489	9.0	27	34	5.312	-H45	063-42	25
84	10	436	10	29	36	5.965	-H45	063-42	25
78	11	404	11	44	44	6.440	-H100	063-42	28
72	12	372	12	30	38	6.982	-H45	063-42	25
64	13	332	13	32	40	7.840	-H45	063-42	25
56	15	291	15	33	41	8.935	-H45	063-42	25
50	17	259	17	35	44	10.033	-H45	063-42	25
44	19	228	19	35	44	11.429	-H45	063-42	25
39	22	203	22	38	48	12.833	-H45	063-42	25
34	25	175	25	39	49	14.836	-H45	063-42	25
32	26	168	26	100	105	15.500	-H100	063-42	28
30	28	156	28	41	51	16.660	-H45	063-42	25
28	30	146	30	100	121	17.750	-H100	063-42	28
26	32	137	32	42	53	19.013	-H45	063-42	25
26	33	133	33	100	125	19.486	-H100	063-42	28
24	36	122	36	44	55	21.350	-H45	063-42	25
23	37	119	37	140	148	21.808	-H140	063-42	31
23	38	117	38	100	125	22.314	-H100	063-42	28
20	42	106	42	45	50	24.595	-H45	063-42	25
20	42	105	42	140	169	24.829	-H140	063-42	31
20	43	104	43	100	110	25.095	-H100	063-42	28
18	47	95	47	140	175	27.415	-H140	063-42	31
18	47	94	47	45	50	27.618	-H45	063-42	25
17	49	90	49	100	110	28.738	-H100	063-42	28
16	54	82	54	100	110	31.805	-H100	063-42	28
16	54	81	54	140	154	31.976	-H140	063-42	31
14	60	74	60	194	213	35.095	-H210	063-42	34
14	60	74	60	140	154	35.308	-H140	063-42	31
14	62	71	62	100	110	36.422	-H100	063-42	28
13	65	68	65	211	233	38.238	-H320	063-42	37
13	67	66	67	210	231	39.286	-H210	063-42	34

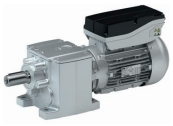

Selection tables

M_{max} = 7.0 Nm

2-stage gearboxes

Mains operation						i	Product		
Min. output speed		Max. output speed		Starting torque					
n_{21} [r/min]	M_2 [Nm]	n_2 [r/min]	M_2 [Nm]	$M_{a,1}$ [Nm]	$M_{a,2}$ [Nm]		g500	MSEMA□□	
13	68	65	68	81	89	39.857	-H100	063-42	28
12	69	64	69	140	154	40.526	-H140	063-42	31
12	72	61	72	183	201	42.593	-H210	063-42	34
12	74	60	74	234	257	43.313	-H450	063-42	40
12	74	60	74	240	264	43.436	-H320	063-42	37
11	76	58	76	140	154	44.748	-H140	063-42	31
11	77	57	77	93	102	45.643	-H100	063-42	28
11	79	56	79	217	239	46.407	-H320	063-42	37
11	81	55	81	206	227	47.679	-H210	063-42	34
10	83	53	83	264	291	48.950	-H450	063-42	40
9.9	86	51	86	103	114	50.786	-H140	063-42	31
9.5	90	49	90	246	271	52.715	-H320	063-42	37
9.2	92	48	92	125	138	54.438	-H210	063-42	34
9.2	93	47	93	239	263	54.750	-H450	063-42	40
9.0	95	46	95	114	125	56.077	-H140	063-42	31
8.3	103	43	103	140	155	60.938	-H210	063-42	34
8.1	105	42	105	270	297	61.875	-H450	063-42	40

3-stage gearboxes

Mains operation						i	Product		
Min. output speed		Max. output speed		Starting torque					
n_{21} [r/min]	M_2 [Nm]	n_2 [r/min]	M_2 [Nm]	$M_{a,1}$ [Nm]	$M_{a,2}$ [Nm]		g500	MSEMA□□	
12	73	60	73	210	263	43.390	-H210	063-42	34
10	81	54	81	210	263	48.571	-H210	063-42	34
9.1	93	47	93	210	263	55.529	-H210	063-42	34
8.3	101	43	101	320	400	60.502	-H320	063-42	37
8.1	104	42	104	210	263	62.160	-H210	063-42	34
7.3	115	38	115	320	400	68.726	-H320	063-42	37
7.1	119	37	119	210	263	71.026	-H210	063-42	34
6.5	129	34	129	320	400	77.387	-H320	063-42	37
6.4	132	33	132	450	527	78.794	-H450	063-42	40
6.3	133	33	133	210	263	79.507	-H210	063-42	34
5.7	147	30	147	320	400	87.906	-H320	063-42	37
5.7	149	29	149	450	563	89.048	-H450	063-42	40
5.5	154	28	154	210	263	92.205	-H210	063-42	34
5.2	161	27	161	450	563	96.522	-H450	063-42	40
5.0	168	26	168	320	400	100.462	-H320	063-42	37
4.9	173	25	173	210	263	103.214	-H210	063-42	34
4.6	182	24	182	450	563	109.083	-H450	063-42	40
4.4	191	23	191	320	400	114.118	-H320	063-42	37

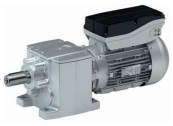

Selection tables

M_{max} = 7.0 Nm

3-stage gearboxes

Mains operation						i	Product		
Min. output speed		Max. output speed		Starting torque					
n_{21} [r/min]	M_2 [Nm]	n_2 [r/min]	M_2 [Nm]	$M_{a,1}$ [Nm]	$M_{a,2}$ [Nm]		g500	MSEMA□□	
4.3	198	22	198	210	263	118.162	-H210	063-42	34
4.2	203	21	203	450	563	121.342	-H450	063-42	40
3.9	215	20	215	320	400	128.743	-H320	063-42	37
3.8	221	20	221	210	263	132.270	-H210	063-42	34
3.7	229	19	229	450	563	137.133	-H450	063-42	40
3.5	245	18	245	320	400	146.244	-H320	063-42	37
3.3	256	17	256	210	231	152.853	-H210	063-42	34
3.2	261	17	261	450	495	156.274	-H450	063-42	40
3.1	279	16	279	320	352	166.541	-H320	063-42	37
2.9	295	15	295	450	495	176.611	-H450	063-42	40
2.7	316	14	316	320	352	189.179	-H320	063-42	37
2.6	331	13	331	450	495	198.059	-H450	063-42	40
2.4	362	12	362	315	347	216.683	-H320	063-42	37
2.3	374	12	374	450	495	223.833	-H450	063-42	40
2.1	415	10	415	450	495	248.200	-H450	063-42	40
1.8	469	9.2	469	450	495	280.500	-H450	063-42	40

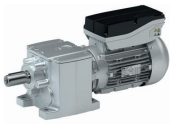

Selection tables

M_{max} = 20 Nm

2-stage gearboxes

Mains operation						i	Product		
Min. output speed		Max. output speed		Starting torque					
n_{21} [r/min]	M_2 [Nm]	n_2 [r/min]	M_2 [Nm]	$M_{a,1}$ [Nm]	$M_{a,2}$ [Nm]		g500	MSEMA□□	
153	16	796	16	63	63	3.267	-H140	080-32	31
149	16	775	16	62	65	3.354	-H100	080-32	28
148	16	767	16	66	66	3.389	-H210	080-32	34
148	16	767	16	66	66	3.389	-H320	080-32	37
112	22	580	22	87	87	4.480	-H140	080-32	31
109	22	565	22	72	89	4.600	-H100	080-32	28
97	25	503	25	75	94	5.167	-H100	080-32	28
90	27	466	27	108	108	5.583	-H210	080-32	34
87	28	453	28	103	111	5.733	-H140	080-32	31
85	29	442	29	81	101	5.887	-H100	080-32	28
82	30	427	30	118	118	6.083	-H320	080-32	37
80	30	416	30	121	121	6.250	-H210	080-32	34
80	30	415	30	105	122	6.272	-H140	080-32	31
78	31	404	31	83	104	6.440	-H100	080-32	28
72	34	376	34	134	134	6.910	-H320	080-32	37
71	34	367	34	86	108	7.086	-H100	080-32	28
69	35	358	35	106	133	7.269	-H140	080-32	31
63	39	325	39	117	146	8.000	-H140	080-32	31
61	40	317	40	92	115	8.214	-H100	080-32	28
55	44	288	44	117	146	9.029	-H140	080-32	31
55	44	287	44	96	120	9.068	-H100	080-32	28
51	48	265	48	182	190	9.799	-H210	080-32	34
51	48	265	48	125	156	9.800	-H140	080-32	31
50	49	258	49	99	124	10.063	-H100	080-32	28
47	52	244	52	207	207	10.677	-H320	080-32	37
47	52	243	52	189	208	10.720	-H210	080-32	34
44	55	229	55	100	125	11.360	-H100	080-32	28
43	56	225	56	128	160	11.554	-H140	080-32	31
43	57	223	57	227	227	11.680	-H320	080-32	37
42	58	217	58	186	233	12.000	-H210	080-32	34
41	59	214	59	235	235	12.128	-H320	080-32	37
40	61	206	61	132	165	12.640	-H140	080-32	31
40	61	205	61	100	125	12.653	-H100	080-32	28
38	64	196	64	257	258	13.268	-H320	080-32	37
37	66	190	66	201	251	13.673	-H210	080-32	34

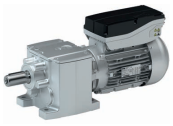

Selection tables

M_{max} = 20 Nm

2-stage gearboxes

Mains operation						i	Product		
Min. output speed		Max. output speed		Starting torque					
n_{21} [r/min]	M_2 [Nm]	n_2 [r/min]	M_2 [Nm]	$M_{a,1}$ [Nm]	$M_{a,2}$ [Nm]		g500	MSEMA□□	
36	67	187	67	270	270	13.905	-H450	080-32	40
36	68	186	68	136	170	13.957	-H140	080-32	31
35	70	179	70	100	125	14.490	-H100	080-32	28
33	74	170	74	200	250	15.306	-H210	080-32	34
32	75	168	75	100	125	15.500	-H100	080-32	28
32	76	165	76	305	305	15.714	-H450	080-32	40
31	78	161	78	140	175	16.122	-H140	080-32	31
30	81	155	81	210	263	16.750	-H210	080-32	34
30	82	154	82	281	328	16.923	-H320	080-32	37
28	86	146	86	100	125	17.750	-H100	080-32	28
28	86	146	86	140	175	17.802	-H140	080-32	31
27	89	142	89	310	354	18.250	-H320	080-32	37
27	91	139	91	210	263	18.750	-H210	080-32	34
26	95	133	95	100	125	19.486	-H100	080-32	28
25	96	132	96	140	175	19.750	-H140	080-32	31
24	101	125	101	299	374	20.731	-H320	080-32	37
23	106	119	106	210	263	21.802	-H210	080-32	34
23	106	119	106	140	175	21.808	-H140	080-32	31
23	108	117	108	376	430	22.170	-H450	080-32	40
21	115	109	115	320	400	23.754	-H320	080-32	37
21	118	107	118	210	263	24.405	-H210	080-32	34
20	120	105	120	140	175	24.829	-H140	080-32	31
20	122	104	122	425	486	25.056	-H450	080-32	40
19	131	96	131	320	400	26.983	-H320	080-32	37
19	132	96	132	210	231	27.119	-H210	080-32	34
18	133	95	133	140	175	27.415	-H140	080-32	31
18	134	94	134	394	434	27.578	-H450	080-32	40
17	143	88	143	320	352	29.548	-H320	080-32	37
17	147	86	147	210	231	30.357	-H210	080-32	34
16	151	83	151	446	490	31.167	-H450	080-32	40
16	155	81	155	140	154	31.976	-H140	080-32	31
15	163	77	163	320	352	33.564	-H320	080-32	37
14	170	74	170	210	231	35.095	-H210	080-32	34
14	173	73	173	450	495	35.689	-H450	080-32	40
13	185	68	185	251	276	38.238	-H320	080-32	37

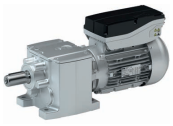

Selection tables

M_{max} = 20 Nm

2-stage gearboxes

Mains operation						i	Product		
Min. output speed		Max. output speed		Starting torque					
n_{21} [r/min]	M_2 [Nm]	n_2 [r/min]	M_2 [Nm]	$M_{a,1}$ [Nm]	$M_{a,2}$ [Nm]		g500	MSEMA□□	
13	191	66	191	210	231	39.286	-H210	080-32	34
12	196	64	196	450	495	40.333	-H450	080-32	40
12	207	61	207	183	201	42.593	-H210	080-32	34
12	210	60	210	322	354	43.313	-H450	080-32	40
12	211	60	211	285	313	43.436	-H320	080-32	37
11	225	56	225	218	240	46.407	-H320	080-32	37
11	231	55	231	206	227	47.679	-H210	080-32	34
10	237	53	237	366	402	48.950	-H450	080-32	40
9.5	256	49	256	248	272	52.715	-H320	080-32	37
9.2	266	47	266	273	300	54.750	-H450	080-32	40
8.1	300	42	300	307	338	61.875	-H450	080-32	40

3-stage gearboxes

Mains operation						i	Product		
Min. output speed		Max. output speed		Starting torque					
n_{21} [r/min]	M_2 [Nm]	n_2 [r/min]	M_2 [Nm]	$M_{a,1}$ [Nm]	$M_{a,2}$ [Nm]		g500	MSEMA□□	
12	207	60	207	210	263	43.390	-H210	080-32	34
11	211	59	211	450	563	44.124	-H450	080-32	40
11	226	55	226	320	400	47.276	-H320	080-32	37
10	232	54	232	210	263	48.571	-H210	080-32	34
10	238	52	238	450	563	49.867	-H450	080-32	40
9.4	257	48	257	320	400	53.703	-H320	080-32	37
8.9	270	46	270	450	563	56.469	-H450	080-32	40
8.3	289	43	289	320	400	60.502	-H320	080-32	37
8.1	295	42	295	450	563	61.774	-H450	080-32	40
7.3	328	38	328	320	400	68.726	-H320	080-32	37
7.2	334	37	334	450	563	69.813	-H450	080-32	40
6.5	370	34	370	320	400	77.387	-H320	080-32	37
6.4	377	33	377	450	563	78.794	-H450	080-32	40
5.7	426	29	426	450	563	89.048	-H450	080-32	40
5.2	461	27	461	450	563	96.522	-H450	080-32	40
4.6	521	24	521	450	563	109.083	-H450	080-32	40

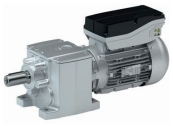

Dimensions, notes

Notes on the dimensions

The following legend shows the layout of the dimension sheets.

Product gearbox

g500-H100

Driven shaft design

Abmessungen mit Vollwelle

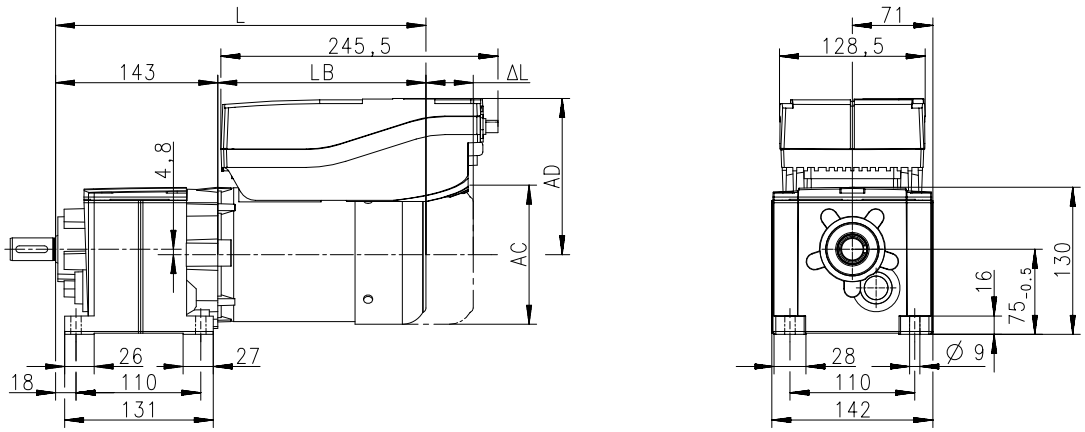

Product Motor

Produkt			MSEMA□□
			063-42
Abmessungen			
Gesamtlänge	**L**	**[mm]**	330
Länge Motor	**LB**	**[mm]**	187
Länge Motoranbauten	**Δ L**	**[mm]**	40
Motordurchmesser	**AC**	**[mm]**	123
Abstand Motor/Anschluss	**AD**	**[mm]**	140.5

Distance of motor centre to the end of terminal box

Total length of the drive without built-on accessories

Motor diameter

Motor length without built-on accessories

Additional length of the built-on accessories (longest version)

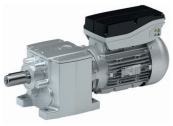

Dimensions

g500-H45

Dimensions with solid shaft

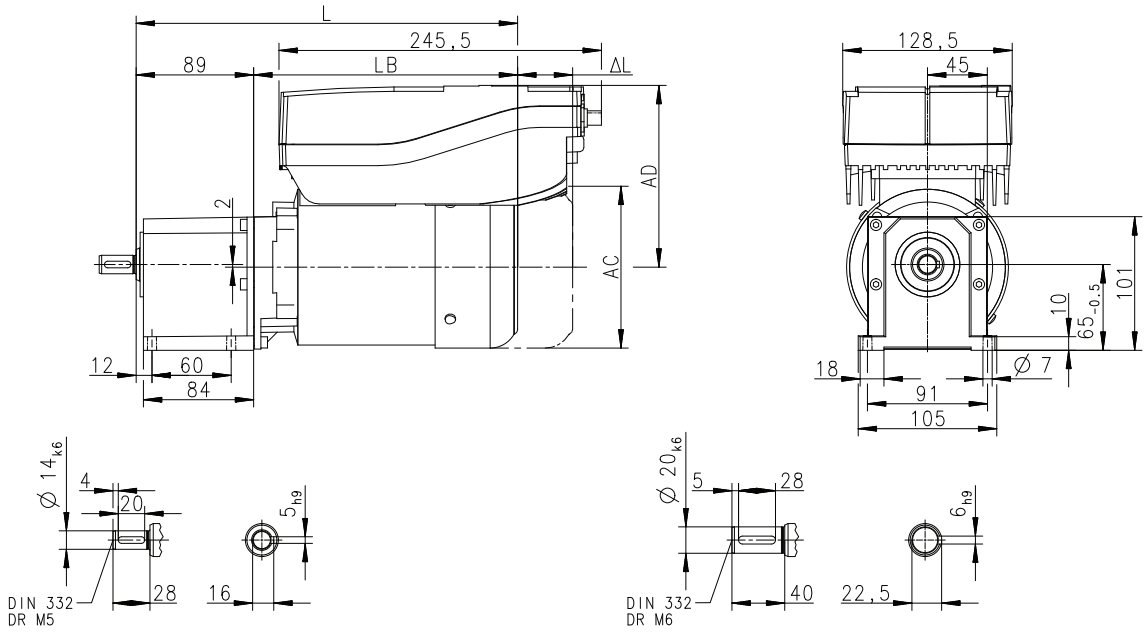

8800188-00

Product			MSEMA□□
			063-42
Dimensions			
Total length	**L**	**[mm]**	292
Motor length	**LB**	**[mm]**	187
Length of motor options	**Δ L**	**[mm]**	40
Motor diameter	**AC**	**[mm]**	123
Distance motor/connection	**AD**	**[mm]**	140.5

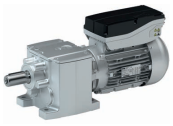

Dimensions

g500-H45

Dimensions with solid shaft and centering

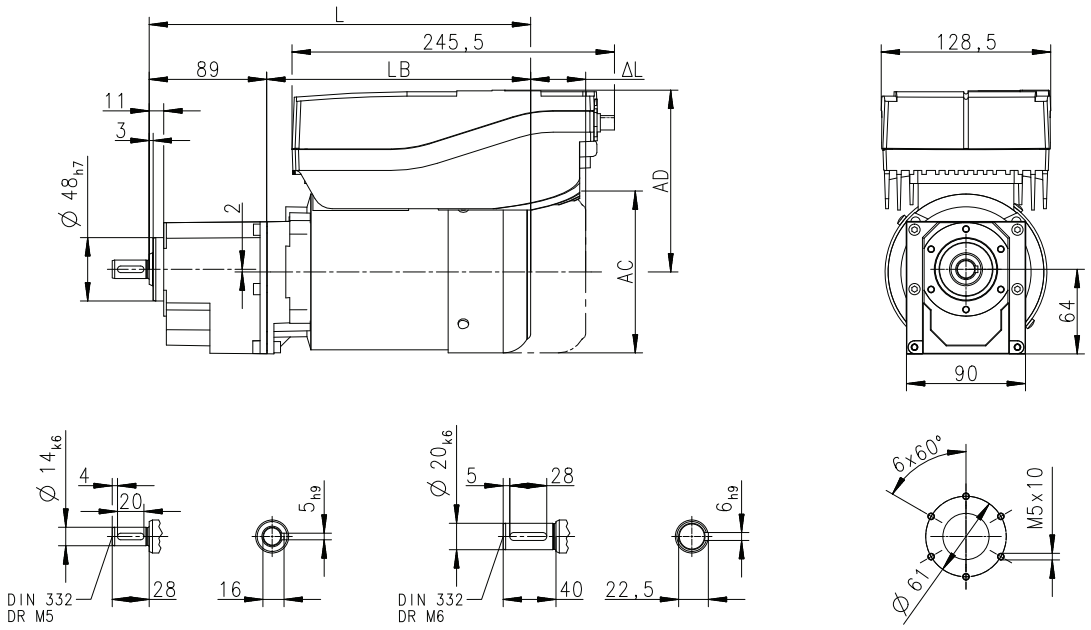

Product			MSEMA□□
			063-42
Dimensions			
Total length	**L**	**[mm]**	292
Motor length	**LB**	**[mm]**	187
Length of motor options	**Δ L**	**[mm]**	40
Motor diameter	**AC**	**[mm]**	123
Distance motor/connection	**AD**	**[mm]**	140.5

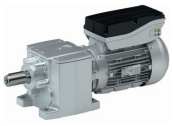

Dimensions

g500-H45

Dimensions with solid shaft and Flange

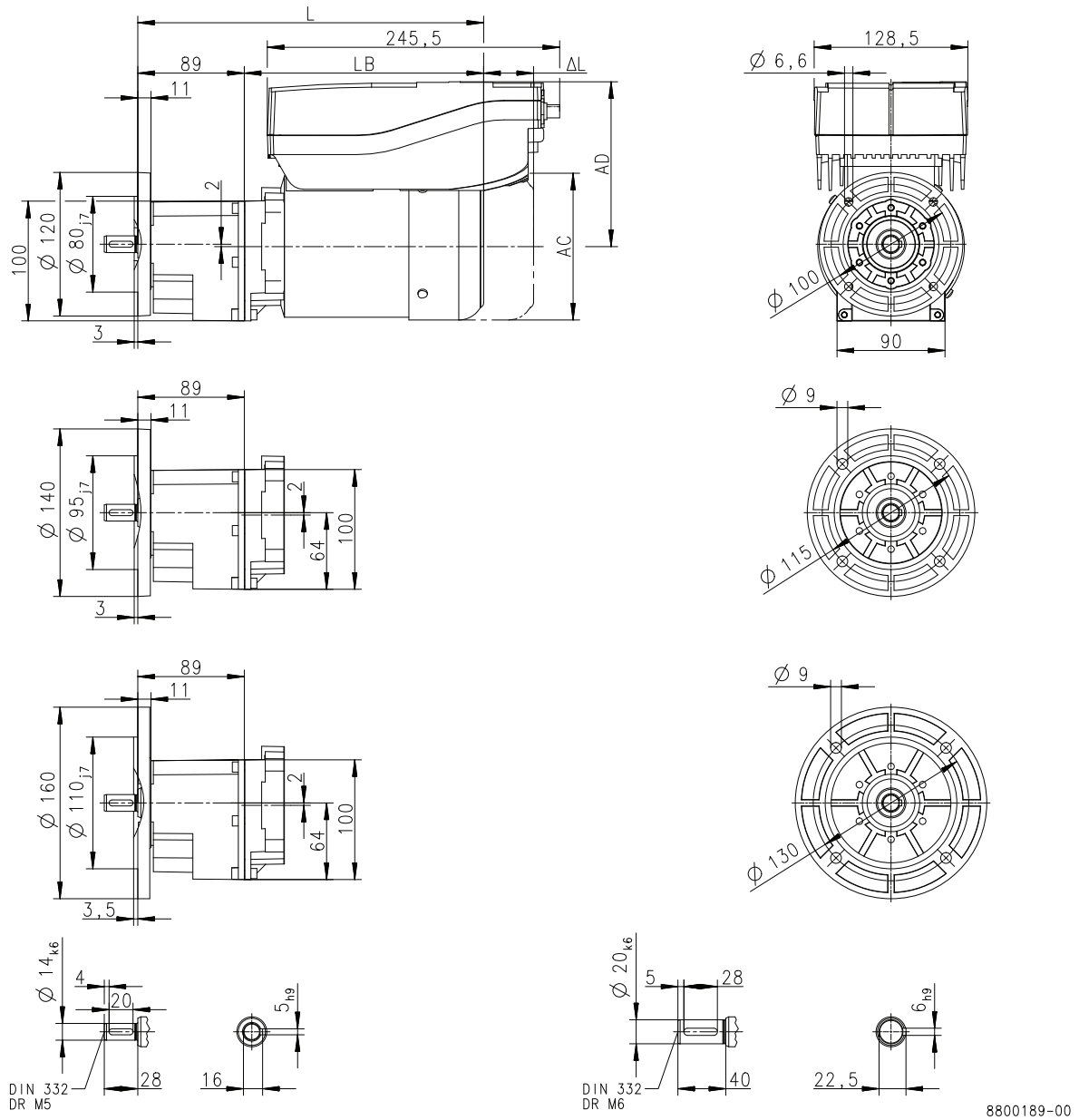

Product			MSEMA□□
			063-42
Dimensions			
Total length	**L**	**[mm]**	292
Motor length	**LB**	**[mm]**	187
Length of motor options	**Δ L**	**[mm]**	40
Motor diameter	**AC**	**[mm]**	123
Distance motor/connection	**AD**	**[mm]**	140.5

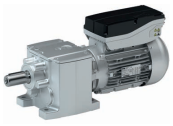

Dimensions

g500-H100

Dimensions with solid shaft

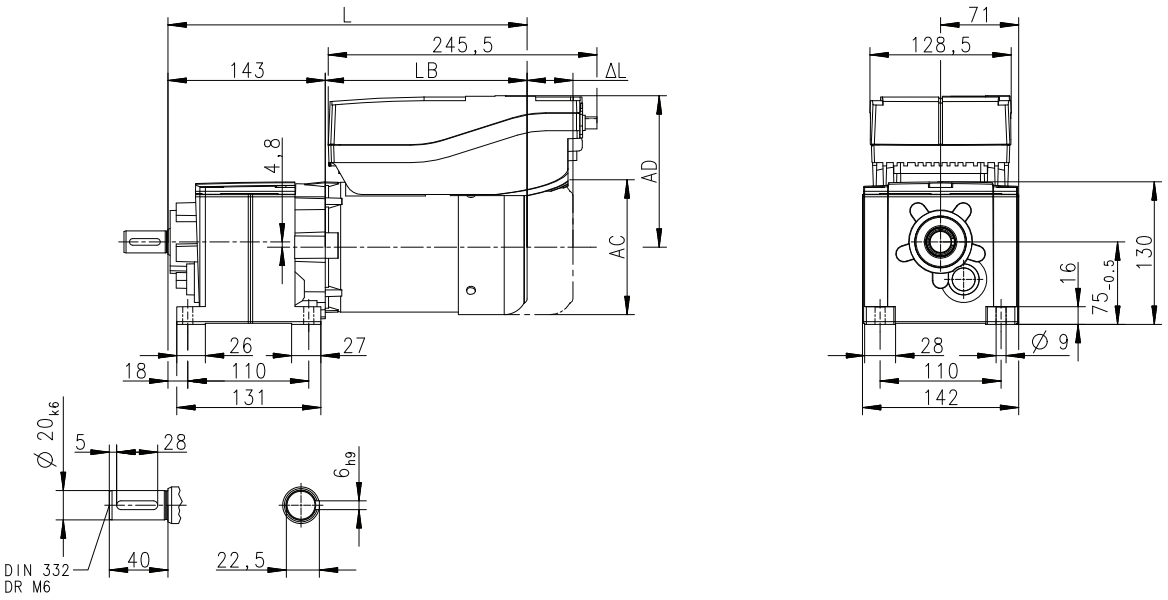

Product			MSEMA□□	
			063-42	080-32
Dimensions				
Total length	**L**	**[mm]**	330	369
Motor length	**LB**	**[mm]**	187	226
Length of motor options	**Δ L**	**[mm]**	40	73
Motor diameter	**AC**	**[mm]**	123	156
Distance motor/connection	**AD**	**[mm]**	140.5	158.5

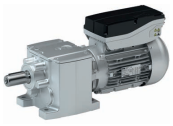

Dimensions

g500-H100

Dimensions with solid shaft and centering

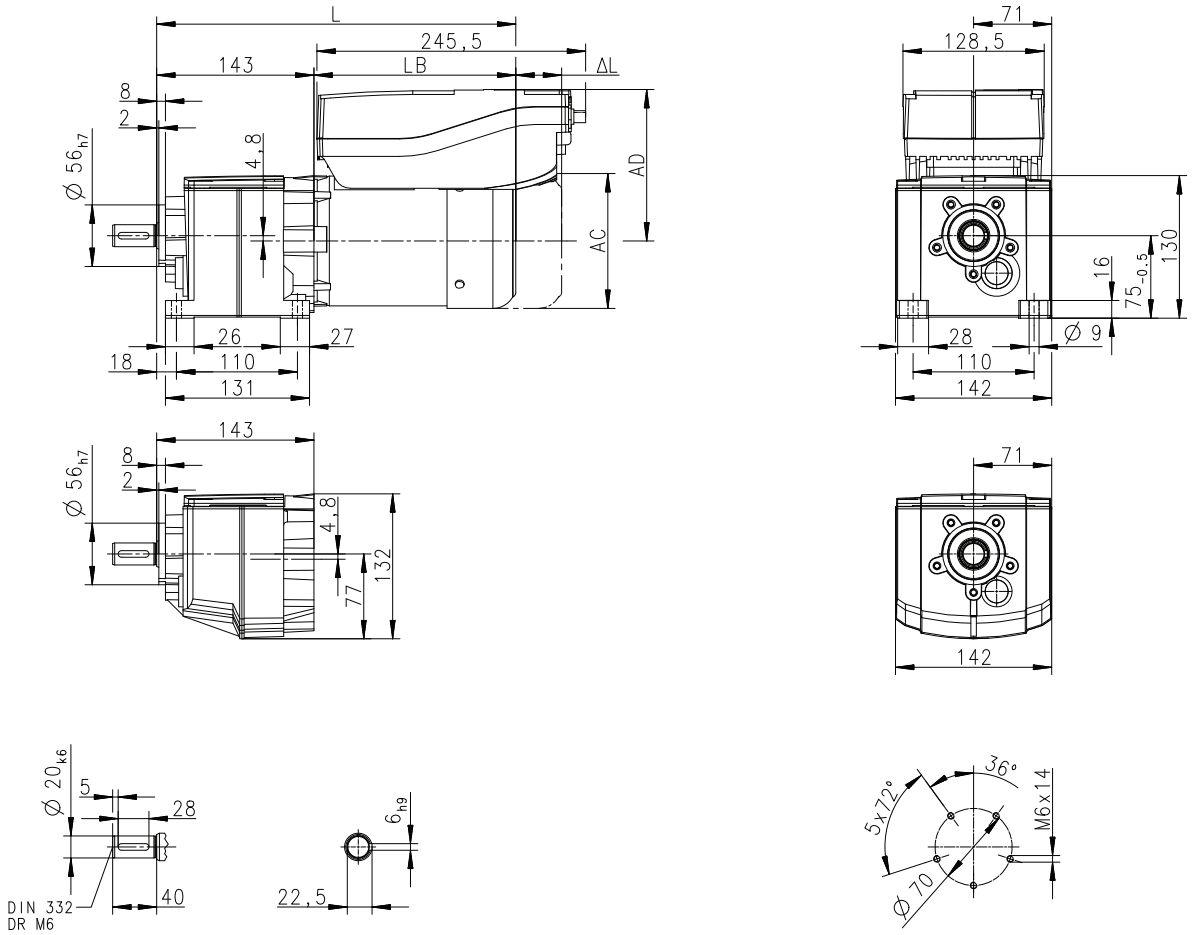

8800193-00

Product			MSEMA□□	
			063-42	080-32
Dimensions				
Total length	**L**	**[mm]**	330	369
Motor length	**LB**	**[mm]**	187	226
Length of motor options	**Δ L**	**[mm]**	40	73
Motor diameter	**AC**	**[mm]**	123	156
Distance motor/connection	**AD**	**[mm]**	140.5	158.5

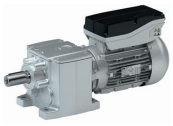

Dimensions

g500-H100

Dimensions with solid shaft and Flange

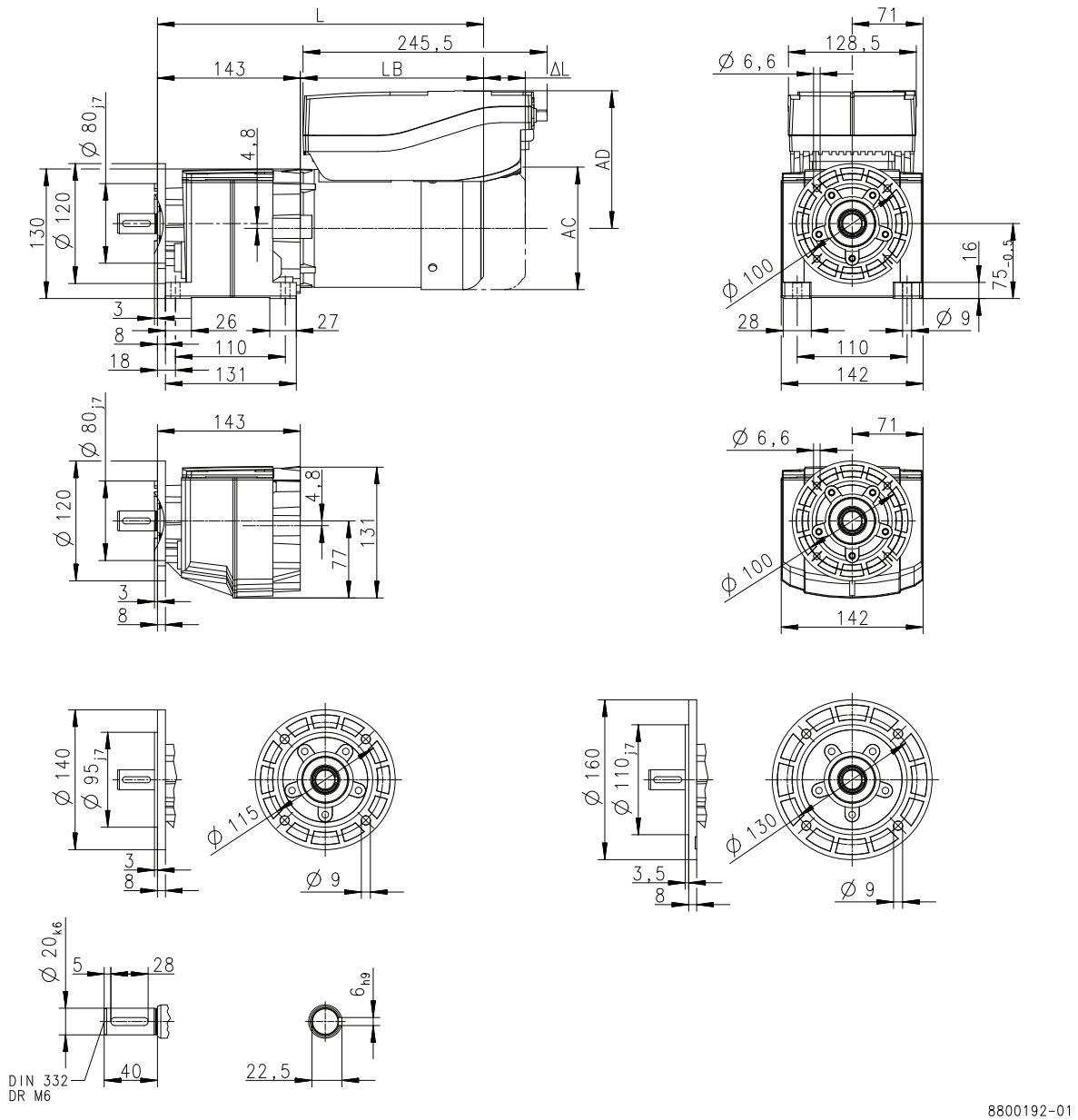

Product			MSEMA□□	
			063-42	080-32
Dimensions				
Total length	**L**	**[mm]**	330	369
Motor length	**LB**	**[mm]**	187	226
Length of motor options	**Δ L**	**[mm]**	40	73
Motor diameter	**AC**	**[mm]**	123	156
Distance motor/connection	**AD**	**[mm]**	140.5	158.5

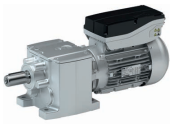

Dimensions

g500-H140

Dimensions with solid shaft

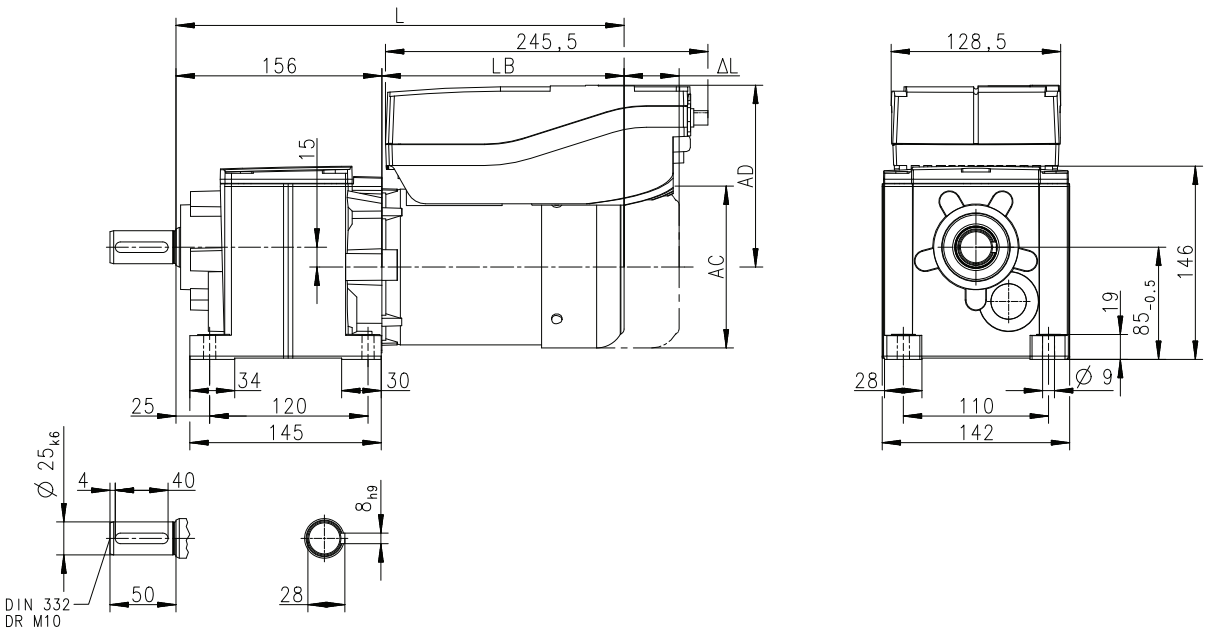

8800194-00

Product			MSEMA□□	
			063-42	080-32
Dimensions				
Total length	**L**	**[mm]**	343	382
Motor length	**LB**	**[mm]**	187	226
Length of motor options	**Δ L**	**[mm]**	40	73
Motor diameter	**AC**	**[mm]**	123	156
Distance motor/connection	**AD**	**[mm]**	140.5	158.5

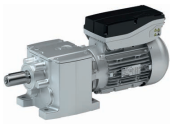

Dimensions

g500-H140

Dimensions with solid shaft and centering

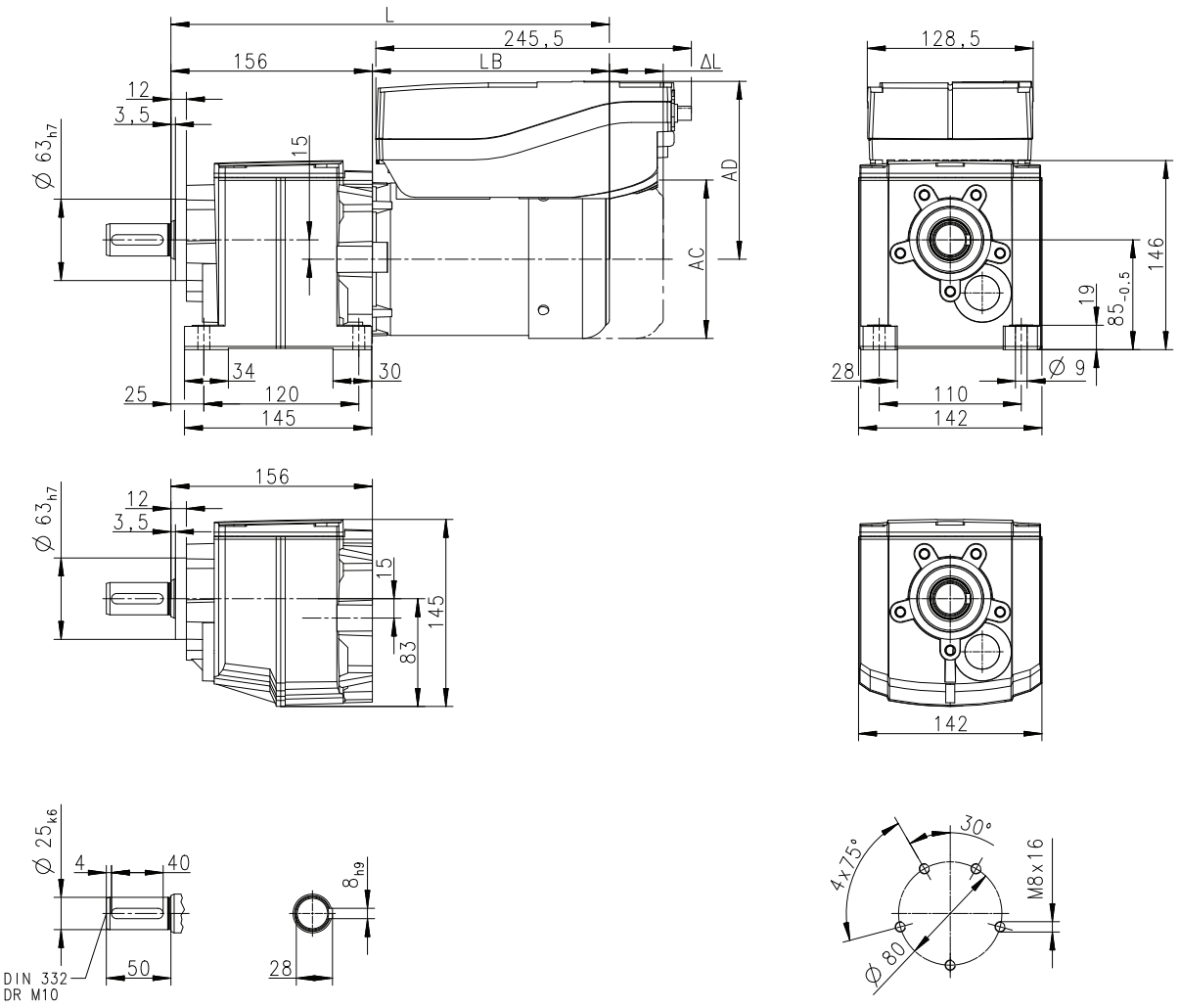

8800196-00

Product			MSEMA□□	
			063-42	080-32
Dimensions				
Total length	**L**	**[mm]**	343	382
Motor length	**LB**	**[mm]**	187	226
Length of motor options	**Δ L**	**[mm]**	40	73
Motor diameter	**AC**	**[mm]**	123	156
Distance motor/connection	**AD**	**[mm]**	140.5	158.5

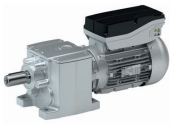

Dimensions

g500-H140

Dimensions with solid shaft and Flange

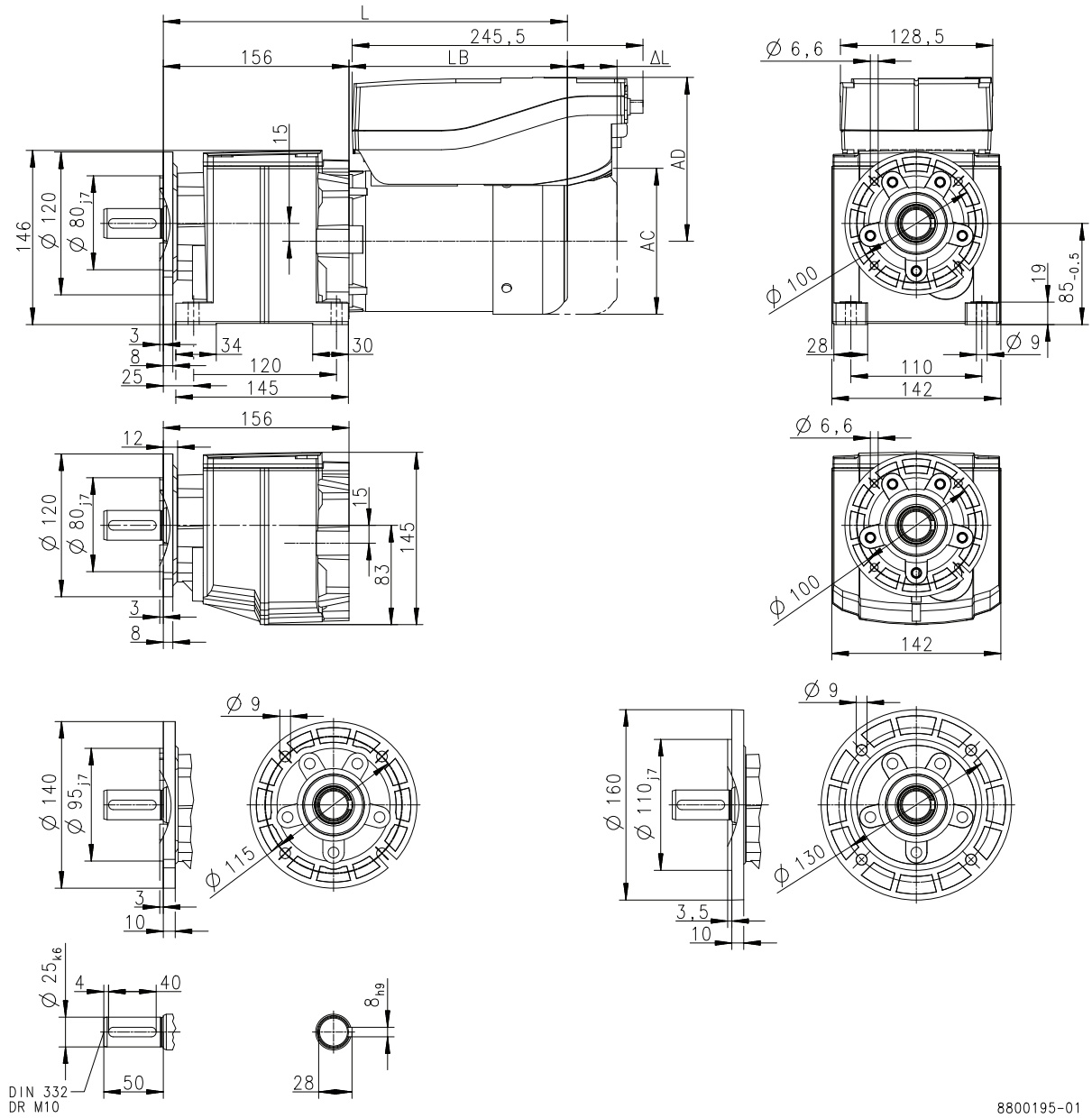

Product			MSEMA□□	
			063-42	080-32
Dimensions				
Total length	**L**	**[mm]**	343	382
Motor length	**LB**	**[mm]**	187	226
Length of motor options	**Δ L**	**[mm]**	40	73
Motor diameter	**AC**	**[mm]**	123	156
Distance motor/connection	**AD**	**[mm]**	140.5	158.5

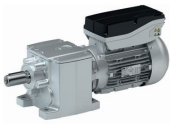

Dimensions

g500-H210

Dimensions with solid shaft

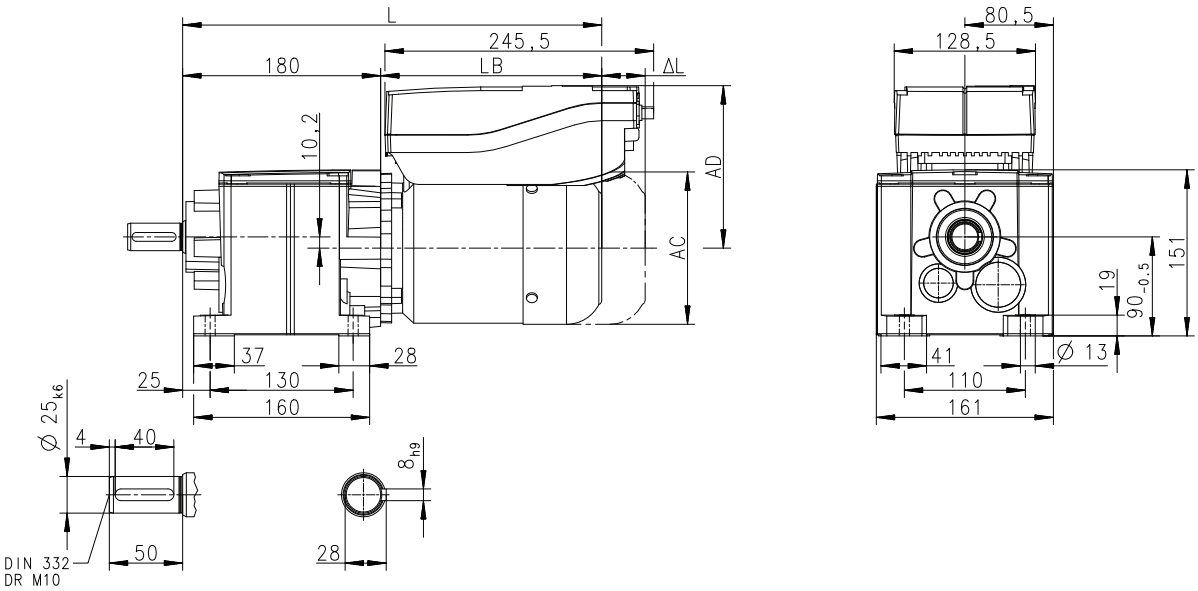

Product			MSEMA□□	
			063-42	080-32
Dimensions				
Total length	**L**	**[mm]**	367	406
Motor length	**LB**	**[mm]**	187	226
Length of motor options	**Δ L**	**[mm]**	40	73
Motor diameter	**AC**	**[mm]**	123	156
Distance motor/connection	**AD**	**[mm]**	140.5	158.5

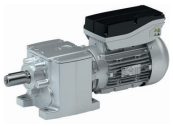

Dimensions

g500-H210

Dimensions with solid shaft and centering

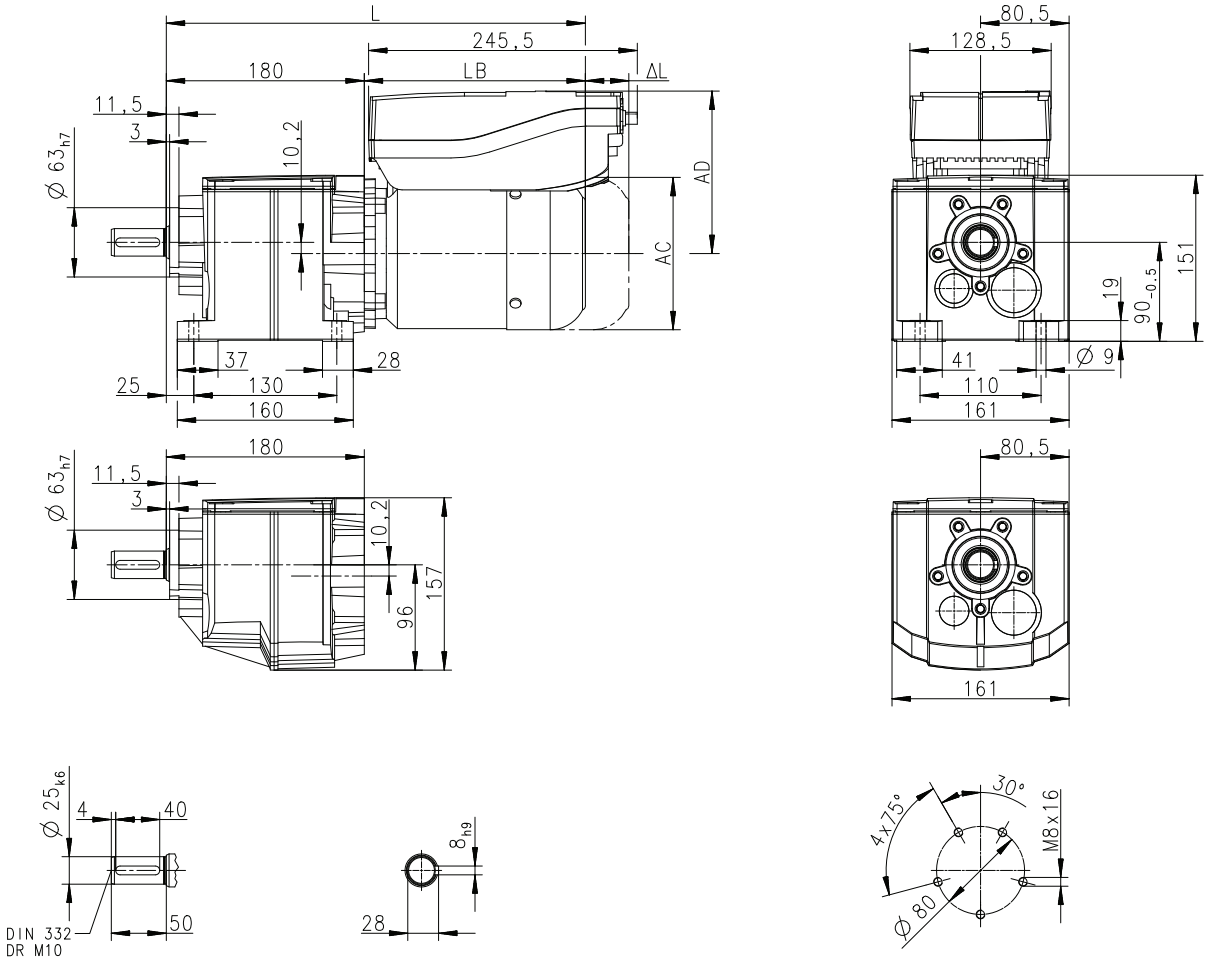

8800199-00

Product			MSEMA□□	
			063-42	080-32
Dimensions				
Total length	**L**	**[mm]**	367	406
Motor length	**LB**	**[mm]**	187	226
Length of motor options	**Δ L**	**[mm]**	40	73
Motor diameter	**AC**	**[mm]**	123	156
Distance motor/connection	**AD**	**[mm]**	140.5	158.5

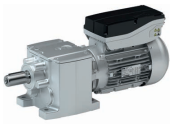

Dimensions

g500-H210

Dimensions with solid shaft and Flange

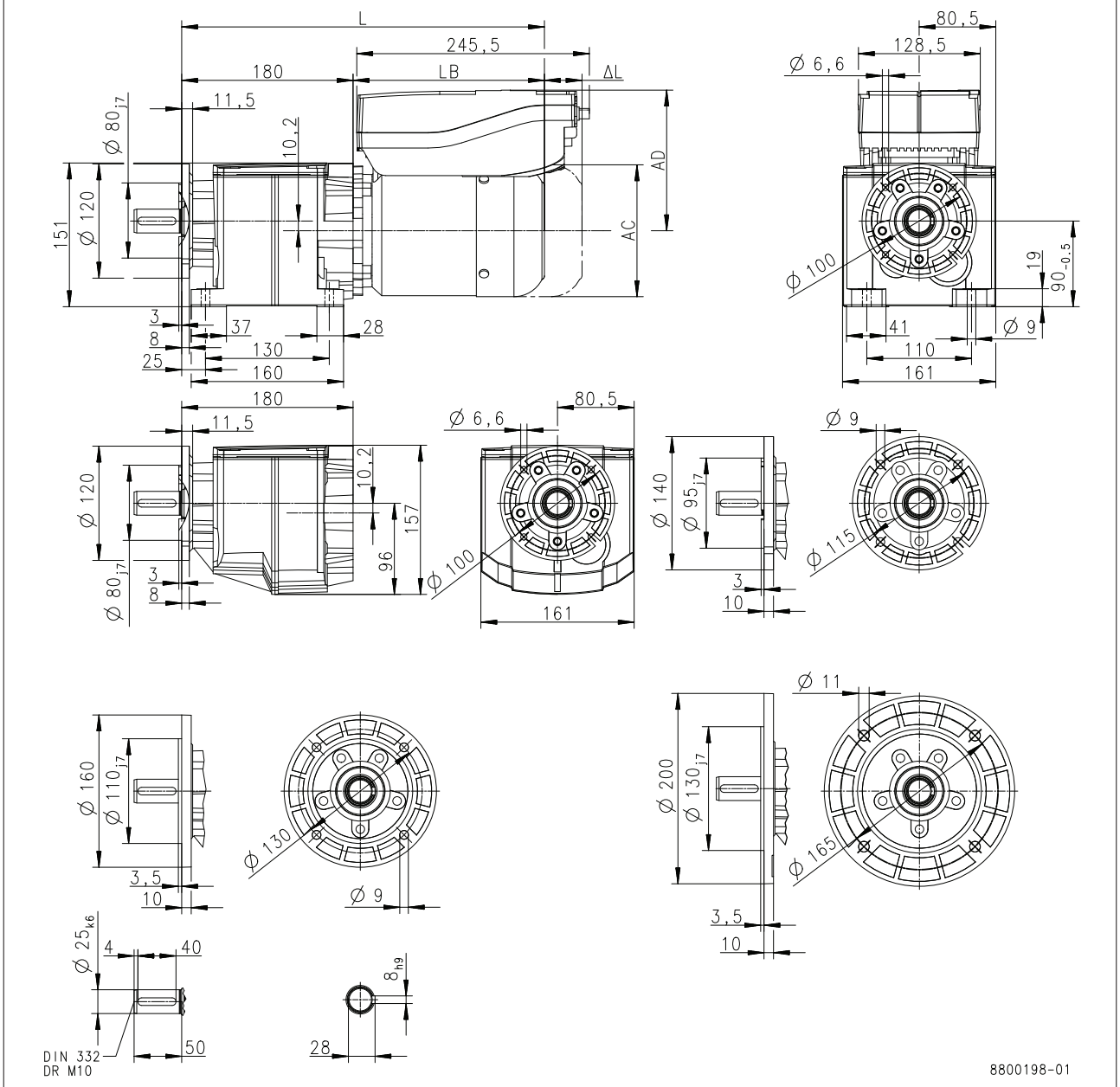

Product			MSEMA□□	
			063-42	080-32
Dimensions				
Total length	**L**	**[mm]**	367	406
Motor length	**LB**	**[mm]**	187	226
Length of motor options	**Δ L**	**[mm]**	40	73
Motor diameter	**AC**	**[mm]**	123	156
Distance motor/connection	**AD**	**[mm]**	140.5	158.5

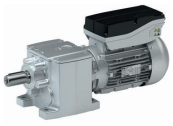

Dimensions

g500-H320

Dimensions with solid shaft

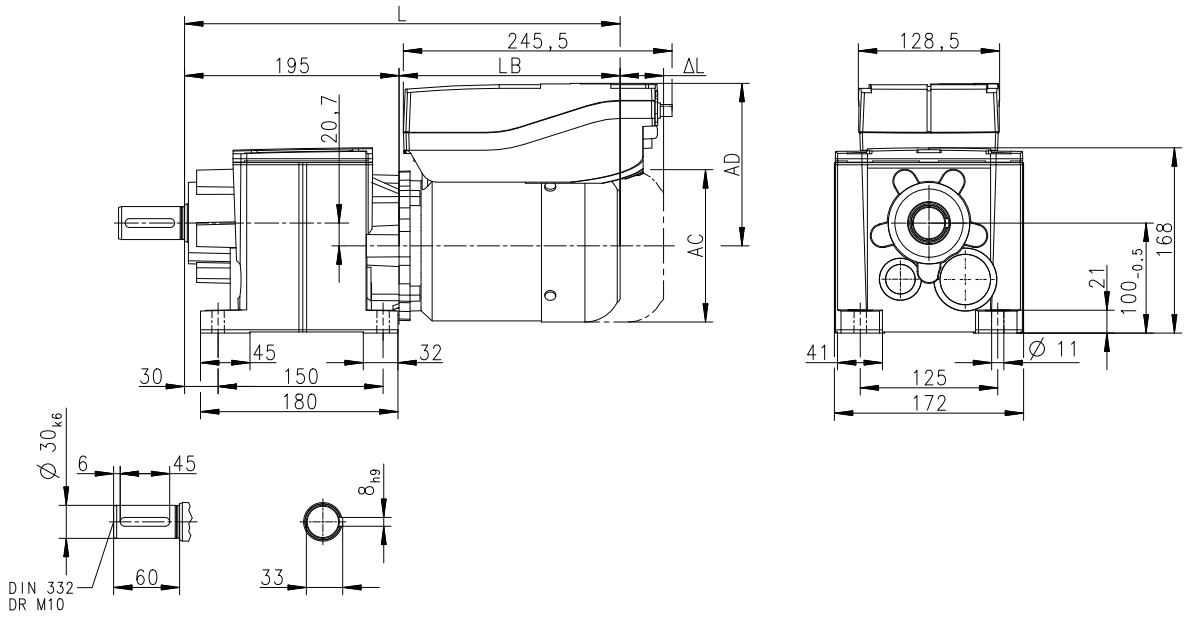

8800200-00

Product			MSEMA□□	
			063-42	080-32
Dimensions				
Total length	**L**	**[mm]**	387	426
Motor length	**LB**	**[mm]**	187	226
Length of motor options	**Δ L**	**[mm]**	40	73
Motor diameter	**AC**	**[mm]**	123	156
Distance motor/connection	**AD**	**[mm]**	140.5	158.5

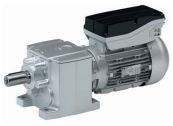

Dimensions

g500-H320

Dimensions with solid shaft and centering

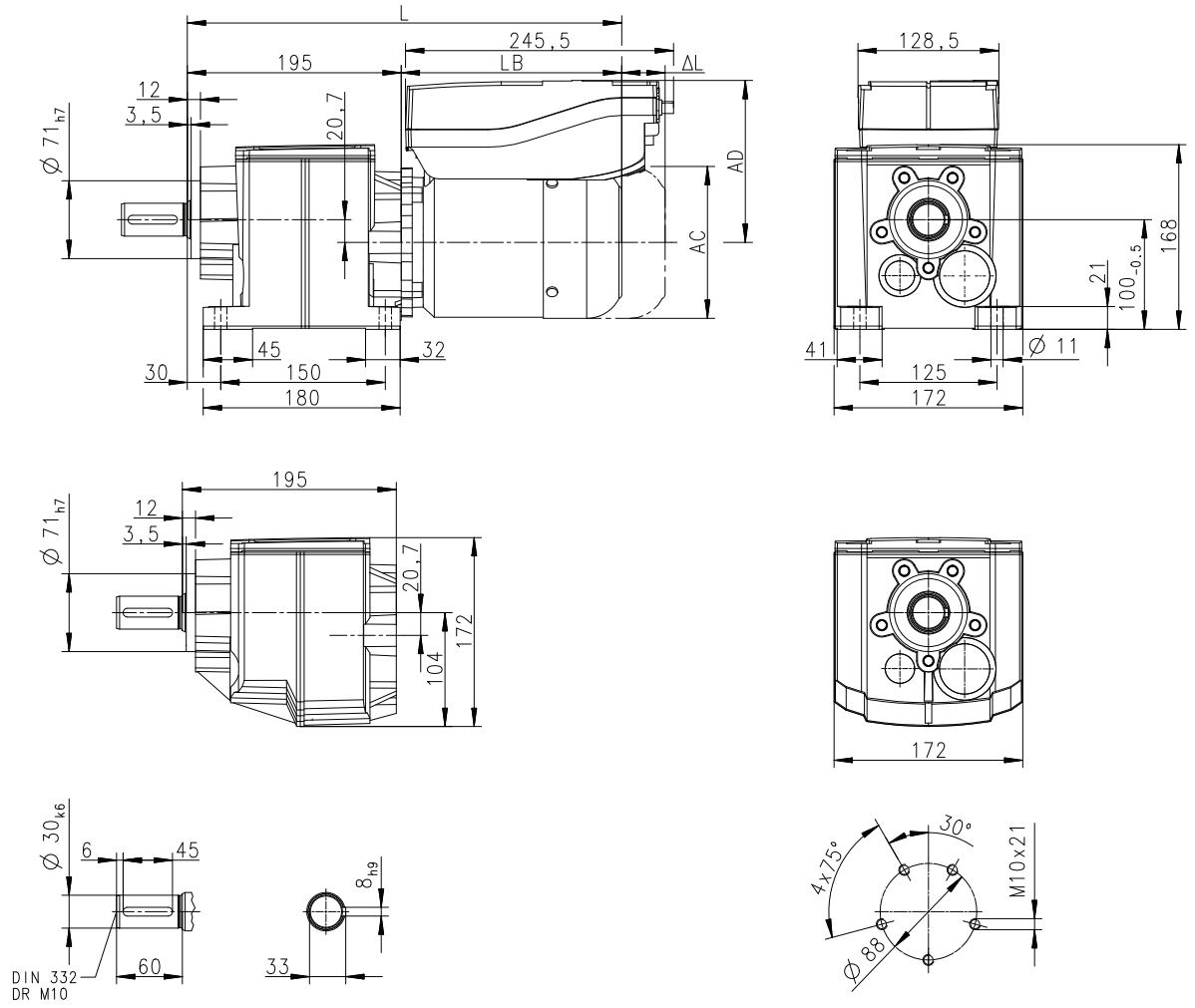

8800202-00

Product			MSEMA□□	
			063-42	080-32
Dimensions				
Total length	**L**	**[mm]**	387	426
Motor length	**LB**	**[mm]**	187	226
Length of motor options	**Δ L**	**[mm]**	40	73
Motor diameter	**AC**	**[mm]**	123	156
Distance motor/connection	**AD**	**[mm]**	140.5	158.5

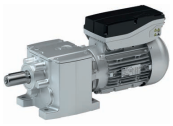

Dimensions

g500-H320

Dimensions with solid shaft and Flange

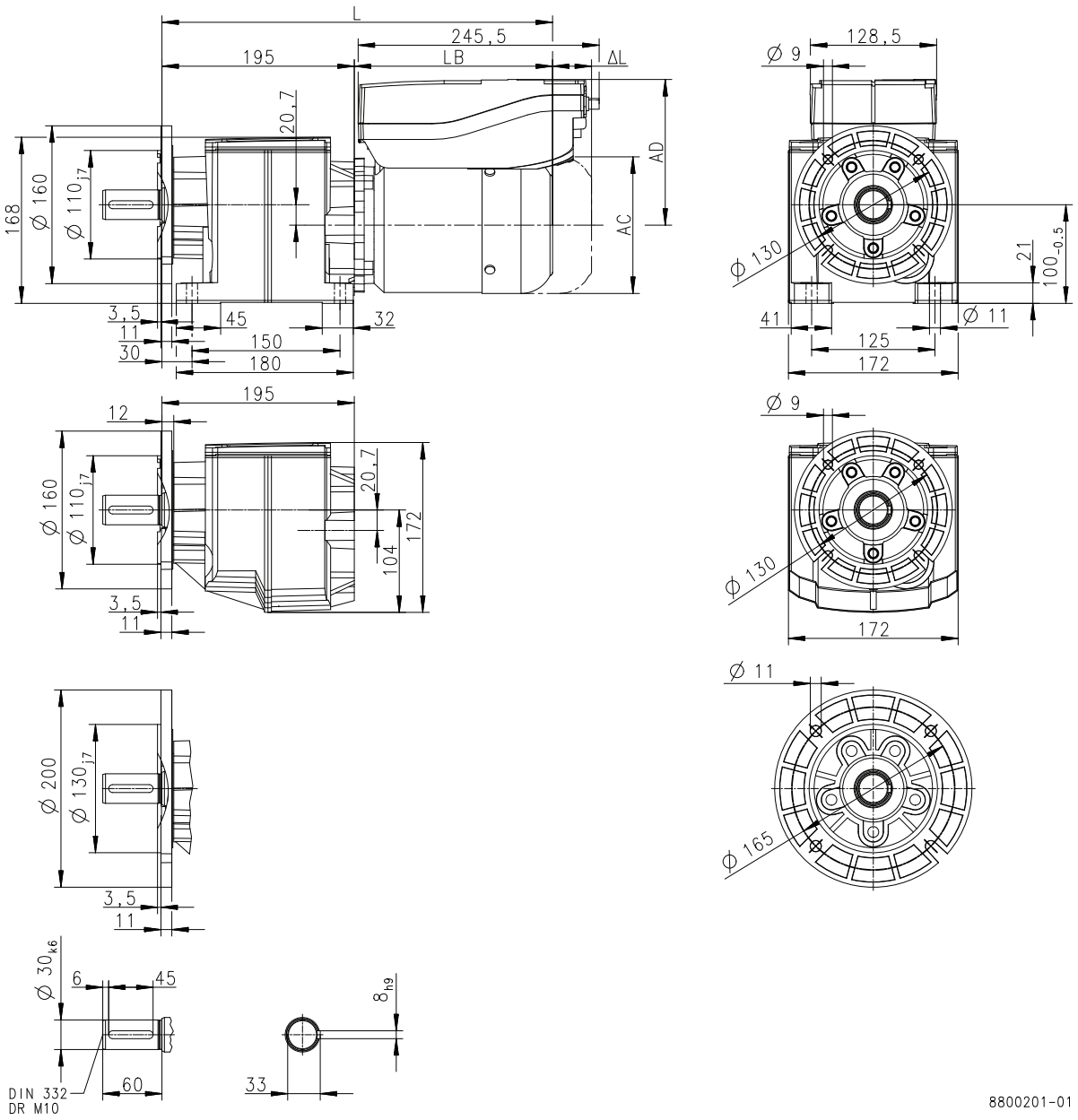

Product			MSEMA□□	
			063-42	080-32
Dimensions				
Total length	**L**	**[mm]**	387	426
Motor length	**LB**	**[mm]**	187	226
Length of motor options	**Δ L**	**[mm]**	40	73
Motor diameter	**AC**	**[mm]**	123	156
Distance motor/connection	**AD**	**[mm]**	140.5	158.5

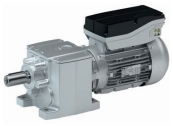

Dimensions

g500-H450

Dimensions with solid shaft

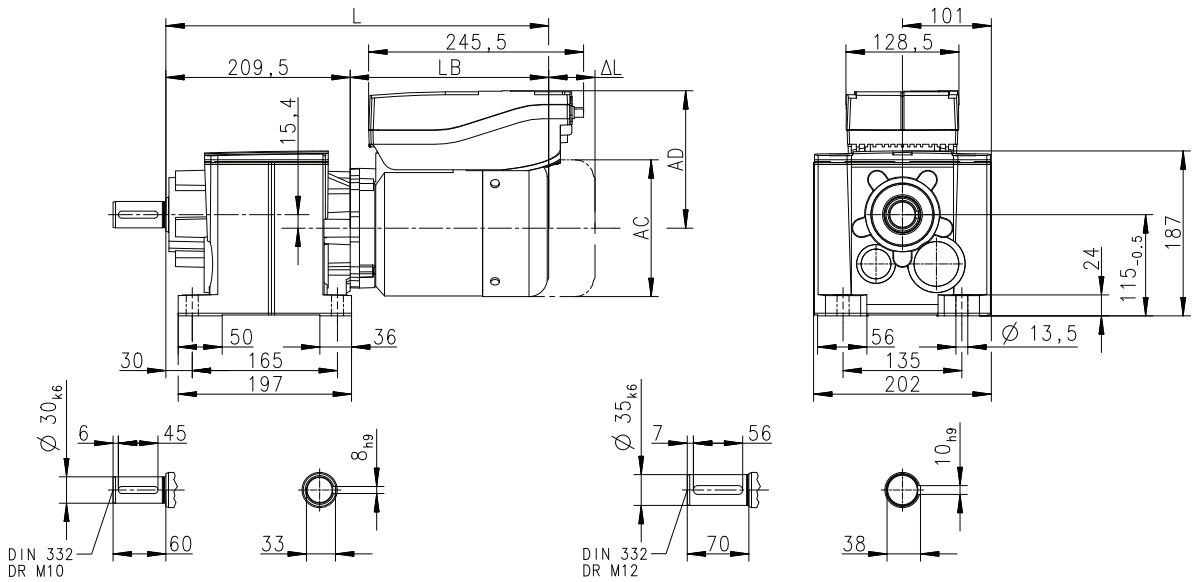

8800203-00

Product			MSEMA□□	
			063-42	080-32
Dimensions				
Total length	**L**	**[mm]**	397	436
Motor length	**LB**	**[mm]**	187	226
Length of motor options	**Δ L**	**[mm]**	40	73
Motor diameter	**AC**	**[mm]**	123	156
Distance motor/connection	**AD**	**[mm]**	140.5	158.5

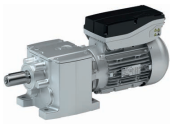

Dimensions

g500-H450

Dimensions with solid shaft and centering

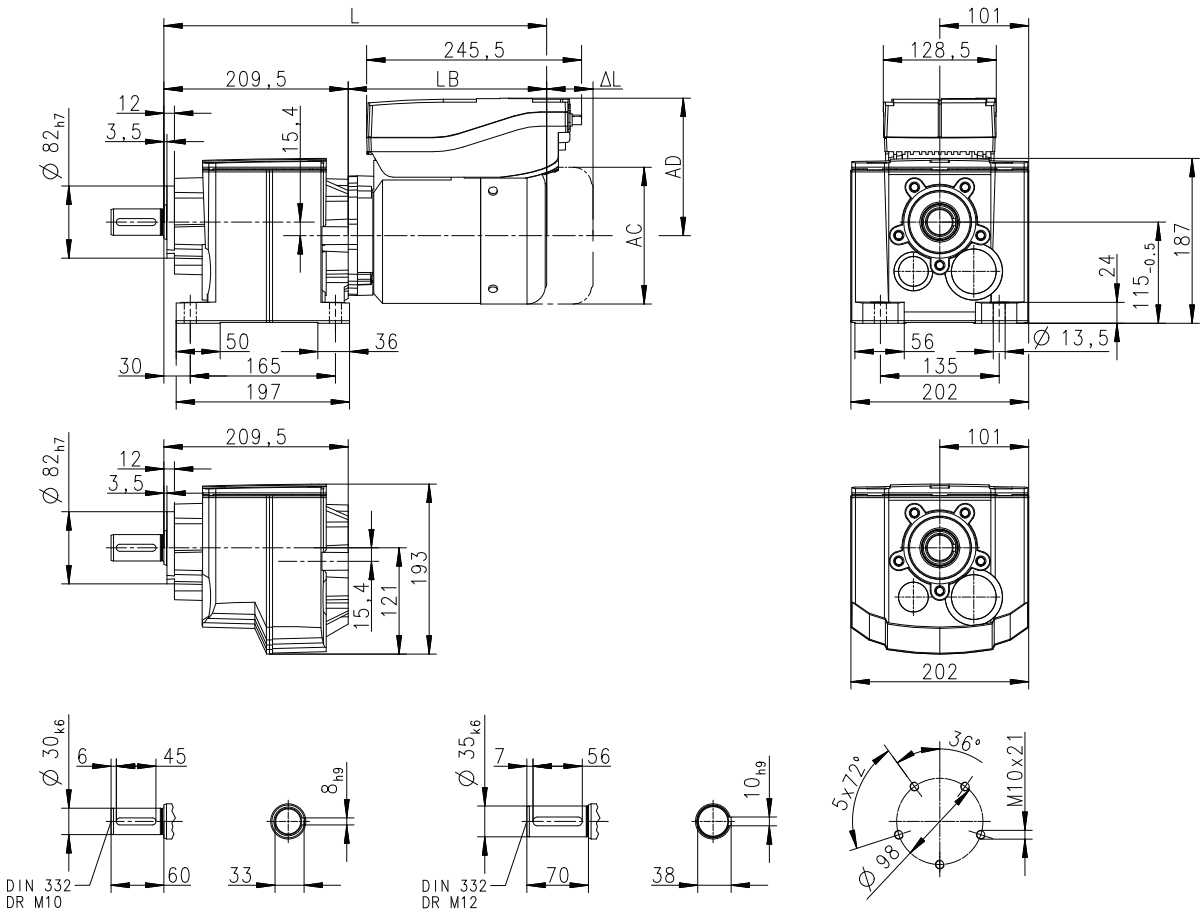

8800205-00

6.3

Product			MSEMA□□	
			063-42	080-32
Dimensions				
Total length	**L**	**[mm]**	397	436
Motor length	**LB**	**[mm]**	187	226
Length of motor options	**Δ L**	**[mm]**	40	73
Motor diameter	**AC**	**[mm]**	123	156
Distance motor/connection	**AD**	**[mm]**	140.5	158.5

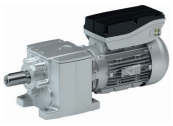

Dimensions

g500-H450

Dimensions with solid shaft and Flange

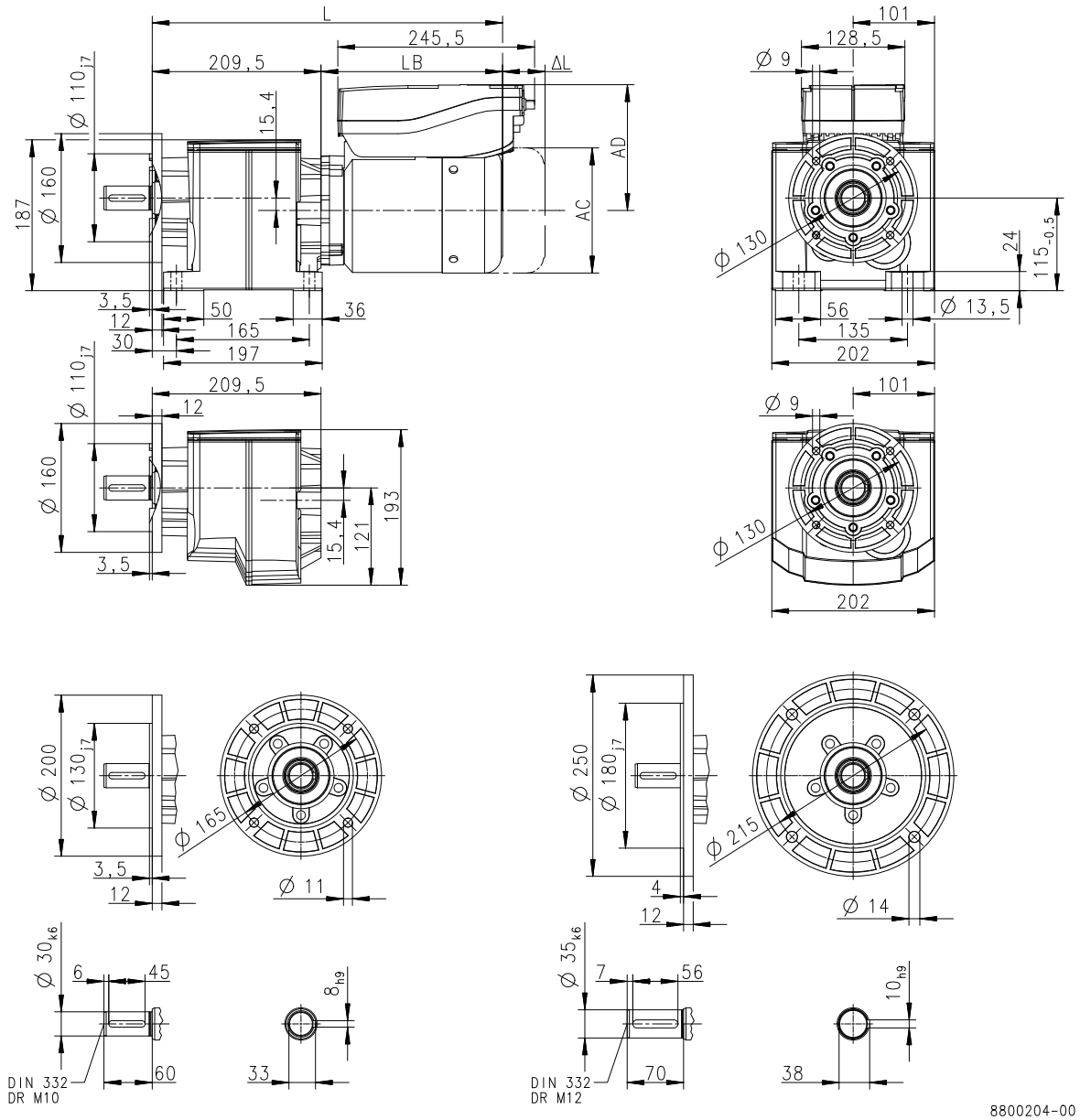

Product			MSEMA□□	
			063-42	080-32
Dimensions				
Total length	**L**	**[mm]**	397	436
Motor length	**LB**	**[mm]**	187	226
Length of motor options	**Δ L**	**[mm]**	40	73
Motor diameter	**AC**	**[mm]**	123	156
Distance motor/connection	**AD**	**[mm]**	140.5	158.5

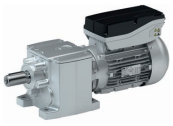

Weights

2-stage gearboxes

				MSEMA□□	
				063-42	080-32
g500	-H45	m	[kg]	7.3	
	-H100	m	[kg]	9.1	16
	-H140	m	[kg]	10	17
	-H210	m	[kg]	12	18
	-H320	m	[kg]	13	20
	-H450	m	[kg]	16	23

3-stage gearboxes

				MSEMA□□	
				063-42	080-32
g500	-H210	m	[kg]	12	18
	-H320	m	[kg]	14	20
	-H450	m	[kg]	17	23

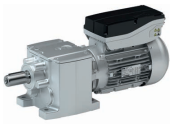

Surface and corrosion protection

For optimum protection of geared motors against ambient conditions, the surface and corrosion protection system (OKS) offers tailor-made solutions.

Various surface coatings combined with other protective measures ensure that the geared motors operate reliably even at high air humidity, in outdoor installations or in the presence of atmospheric impurities. Any colour from the RAL Classic collection can be chosen for the top coat. The geared motors are also available unpainted (no surface and corrosion protection).

Surface and corrosion protection	Applications	Measures
OKS-G (primed)	• Dependent on subsequent top coat applied	• 2K PUR priming coat (grey) • Zinc-coated screws • Rust-free breather elements Optional measures • Stainless steel nameplate
-	• Standard applications • Internal installation in heated buildings • Air humidity up to 90%	• Surface coating as per corrosivity category C1 (in line with EN 12944-2) • Zinc-coated screws • Rust-free breather elements Optional measures • Stainless steel nameplate
OKS-M (medium)	• Internal installation in non-heated buildings • Covered, protected external installation • Air humidity up to 95%	• Surface coating as per corrosivity category C2 (in line with EN 12944-2) • Zinc-coated screws • Rust-free breather elements Optional measures • Stainless steel shaft • Stainless steel nameplate • Rust-free shrink disc (on request)
OKS-L (large)	• External installation • Air humidity above 95% • Chemical industry plants • Food industry	• Surface coating as per corrosivity category C3 (in line with EN 12944-2) - -

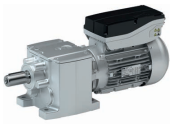

Surface and corrosion protection

Structure of surface coating

Surface and corrosion protection	Corrosivity category	Surface coating	Colour
	DIN EN ISO 12944-2	Structure	
Without OKS(uncoated)		Dipping primed gearbox	
OKS-G (primed)		Dipping primed gearbox 2K PUR priming coat	
-	C1	Dipping primed gearbox 2K-PUR top coat	Standard: RAL 7012 Optional: RAL Classic
OKS-M (medium)	C2	Dipping primed gearbox 2K PUR priming coat 2K-PUR top coat	
OKS-L (large)	C3		

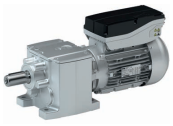

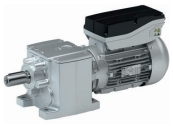

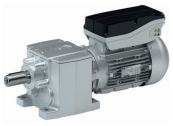

g500-H helical gearboxes

45 to 450 Nm

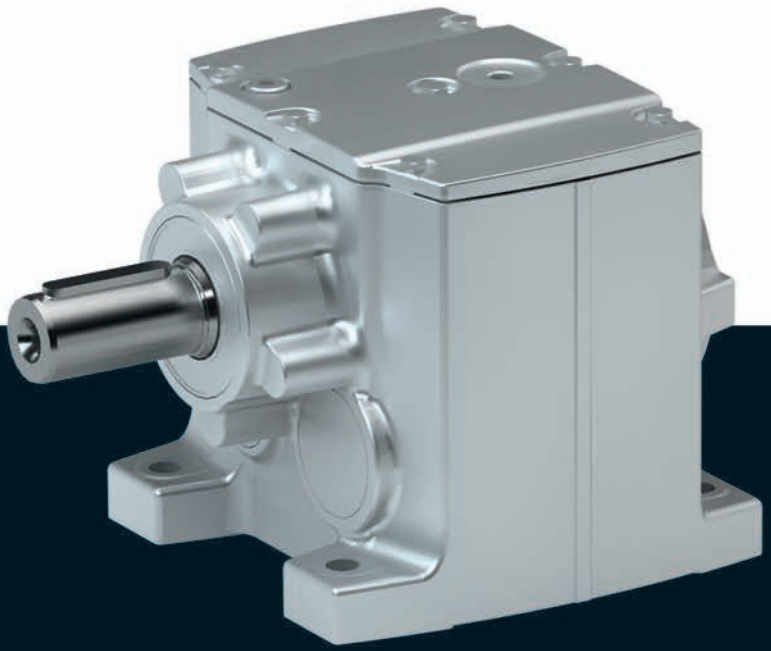

g500-H helical gearboxes

Contents

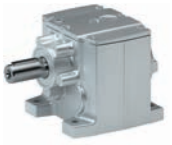

General information	List of abbreviations	6.3.1 - 5
	Product information	6.3.1 - 6
	Equipment	6.3.1 - 7
	The gearbox kit	6.3.1 - 8
	Functions and features	6.3.1 - 10
	Lubricants	6.3.1 - 11
	Ventilation	6.3.1 - 12
Technical data	Permissible radial and axial forces at output	6.3.1 - 15
	Moments of inertia	6.3.1 - 17
	Additional weights for gearboxes	6.3.1 - 20

Contents

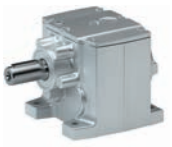

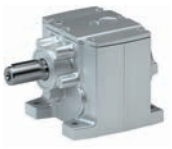

List of abbreviations

$F_{ax,max}$	[N]	Max. axial force
$F_{rad,max}$	[N]	Max. radial force
i		Ratio
J	[kgcm²]	Moment of inertia
m	[kg]	Mass

g500-H helical gearboxes

General information

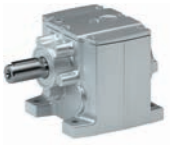

Product information

The robust helical gearboxes feature high permissible radial forces, closely stepped ratios and a low backlash. They are available in 2-pole and 3-pole design with a torque up to 450 Nm and a ratio of up to i= 370.

Versions

- Fine-scaling of size / torque provides for an optimum machine adaptation
- Standardised shaft and flange dimensions for an easy machine integration
- High efficiency

The product name

Gearbox type	Product range		Design	Rated torque [Nm]	Product
Helical gearbox	g500	-	H	45	g500-H45
				100	g500-H100
				140	g500-H140
				210	g500-H210
				320	g500-H320
				450	g500-H450

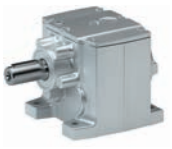

Equipment

Overview

The equipment includes all the options available as standard and all the built-on accessories of the product.

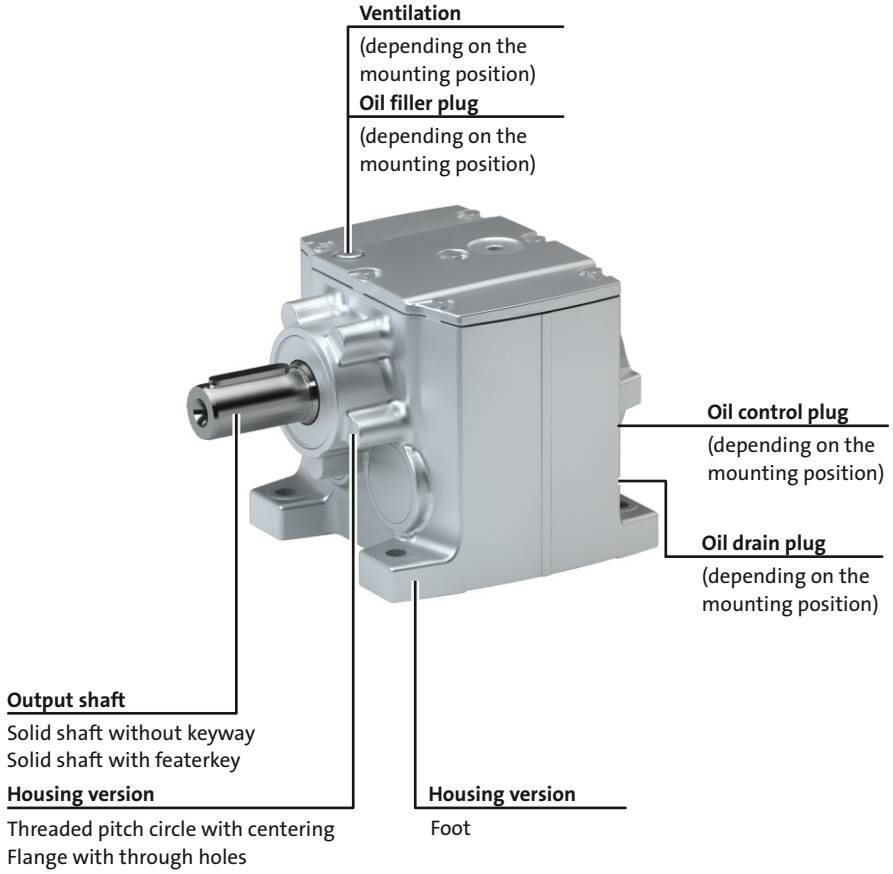

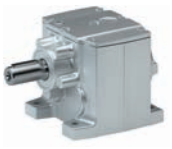

The gearbox kit

Gearbox details

Product	g500-H45	g500-H100	g500-H140	g500-H210	g500-H320	g500-H450
Driven shaft						
Solid shaft without keyway [mm]		20x40	25x50		30x60	35x70
Solid shaft with featherkey [mm]	14x28 20x40	20x40	25x50		30x60	30x60 35x70
Design	Standard stainless steel					
Gasket	Standard FPM (Viton)					
Bearing	Standard	Standard Reinforced				
Fitting grease	Not enclosed Enclosed					
Housing						
Housing version	With foot Without foot with centering	With foot With foot and centering Without foot with centering				
Output flange						
flange diameter [mm]	120/140/160			120/140/160/200	160/200	160/200/250
Lubricant						
Type	CLP 460 [1)] CLP HC 320 CLP HC 220 CLP HC 220 USDA H1					
Oil-level inspection	Without inspection With inspection					
Breather element	Without				Standard mounting position: Mounted Combined mounting position: loosely enclosed	
Backlash						
Backlash	Standard					

[1)] Not suitable for geared servo motors.

► Further information and installation feasibilities can be found in the Gearboxes chapter.

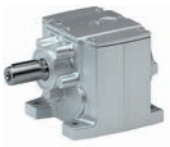

The gearbox kit

Gearbox details

Solid shaft		
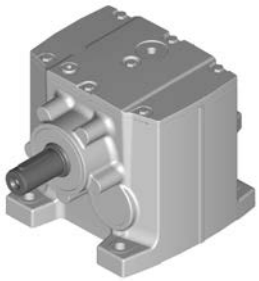 Foot mounting	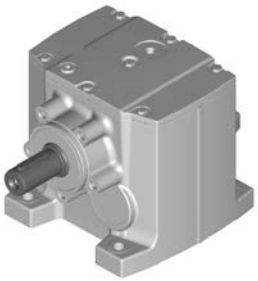 Foot mounting With centering	 Foot mounting Flange with through holes

Solid shaft	
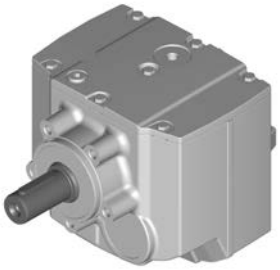 With centering	 Flange with through holes

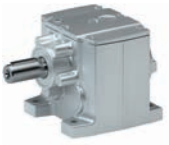

Functions and features

Product	g500-H45	g500-H100	g500-H140	g500-H210	g500-H320	g500-H450
Housing						
Design	Cuboid					
Material	Aluminium					
Solid shaft						
Design	with keyway to DIN 6885	with keyway to DIN 6885 Without keyway				
Tolerance	Shaft diameter ≤ 50 mm: k6 Shaft diameter > 50 mm: m6					
Material	Tempered steel C45 Nirosta X46Cr13					
Toothed parts						
Design	Ground tooth flanks Optimised tooth flank geometry					
Material	Case-hardened steel					
Shaft-hub joint						
	Force-fit					
Shaft sealing rings						
Design	With dust lip					
Material	NB / FP					
Bearing						
Design	Ball bearing / tapered-roller bearing depending on size and design					
Lubricants						
	Standard: mineral oil Optional: synthetic oil [1]					
Quantities	Corresponding to mounting position (see nameplate)					
Mechanical efficiency						
2-stage gearboxes [$\eta_{c=1}$]	0.96					
3-stage gearboxes [$\eta_{c=1}$]				0.95		

[1] Standard for geared servo motors.

Direction of rotation

2-stage gearboxes	3-stage gearboxes
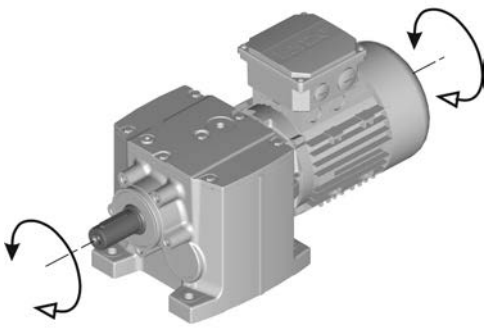	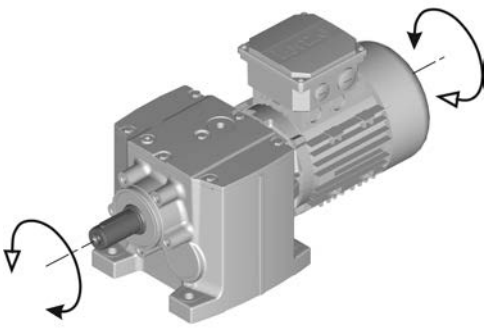

6.3.1



Lubricants

Lenze gearboxes and geared motors are ready for operation on delivery and are filled with lubricants specific to both the drive and the design. The mounting position and design specified in the order are key factors in choosing the volume of lubricant.

The lubricants listed in the lubricant table are approved for use in Lenze drives.

Lubricant table

Mode	CLP 460	CLP HC 320	CLP HC 220 USDA H1
Ambient temperature [°C]	0 ... +40	-25 ... +50	-20 ... +40
Specification	Mineral based oil with additives	Synthetic-based oil (synthetic hydrocarbon / poly-alpha-olefin oil)	
Changing interval	16000 operating hours not later than after three years (oil temperature 70 to 80 °C)	25000 operating hours not later than after three years (oil temperature 70 to 80 °C)	16000 operating hours not later than after three years (oil temperature 70 to 80 °C)
Fuchs	Fuchs Renolin CLP 460	Fuchs Renolin Unisyn CLP 320	bremer & leguil Cassida Fluid GL 220
Klüber	Klüberoil GEM1-460 N	Klübersynth GEM4-320 N	Klüberoil 4 UH1-220 N
Shell	Shell Omala S2 G 460	Shell Omala S4 GX HD 320	

► Please contact your Lenze sales office if you are operating at ambient temperatures in areas up to< -20 °C bzw. > or up to +40°C.

Shaft sealing rings

By default, the gearboxes come with NBR shaft sealing rings at the output end. At high speed and unfavourable ambient conditions as high temperature, reduced circulation of air etc., Lenze recommends the use of Viton shaft sealing rings.

Please consider this in your order.

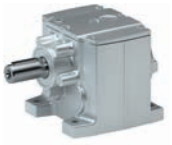

Ventilation

Non-ventilated gearboxes

No ventilation is required for gearboxes g500-H45 to H210.

Ventilated gearboxes

The g500-H320 H450 gearbox is supplied with a breather element as standard.

Gearboxes in combined mounting position

To reduce the number of different versions, the gearboxes can also be ordered with combined mounting positions.
Depending on the gearbox in question, the following combinations are available:
- g500-H45 in combined mounting position ABCDEF
- g500-H100 ... H450 in combined mounting position AEF

The breather elements are supplied loose.

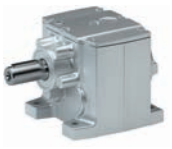

Ventilation

Position of ventilation, sealing elements and oil level check

► **A ... F** mounting position

A	B
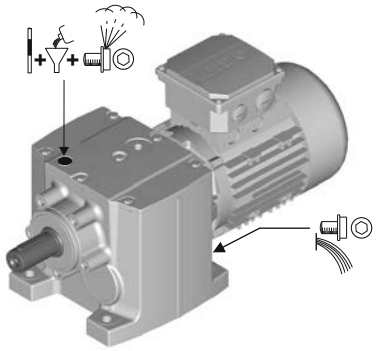	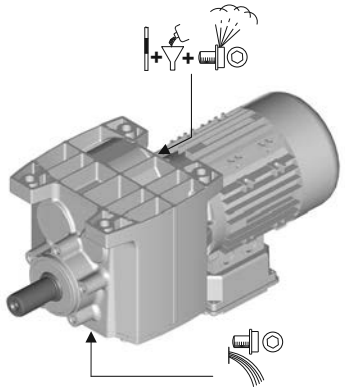
C	**D**
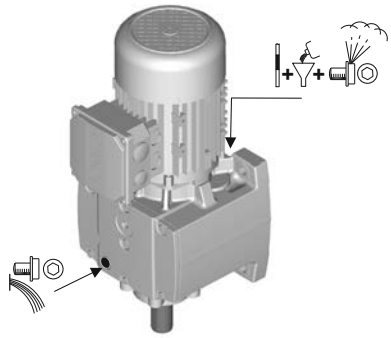	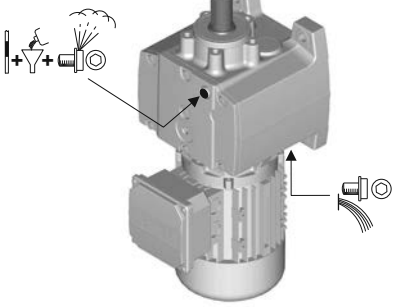
E	**F**
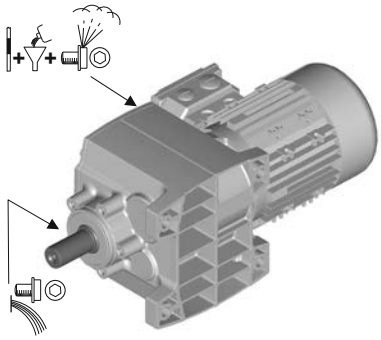	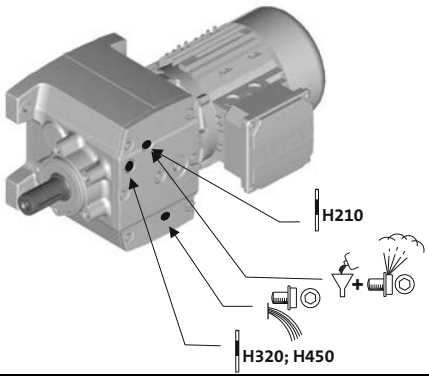

	Filling		Drain
	Ventilation		Check

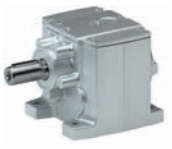

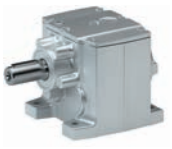

Permissible radial and axial forces at output

Permissible radial force

$F_{rad,perm} = f_w \times F_{rad,max}$

► If F_{rad} **and** $F_{ax} \neq 0$, please contact Lenze.

Permissible axial force

If there is no radial force, the maximum permissible axial force is 50 % of the table value $F_{rad,max}$

Application of forces

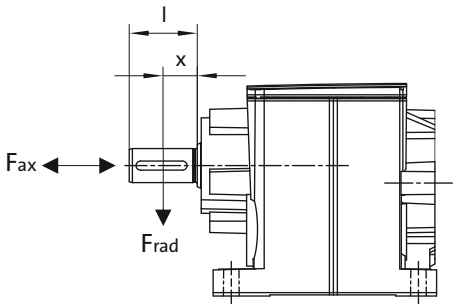

Additional load factor f_w at output shaft

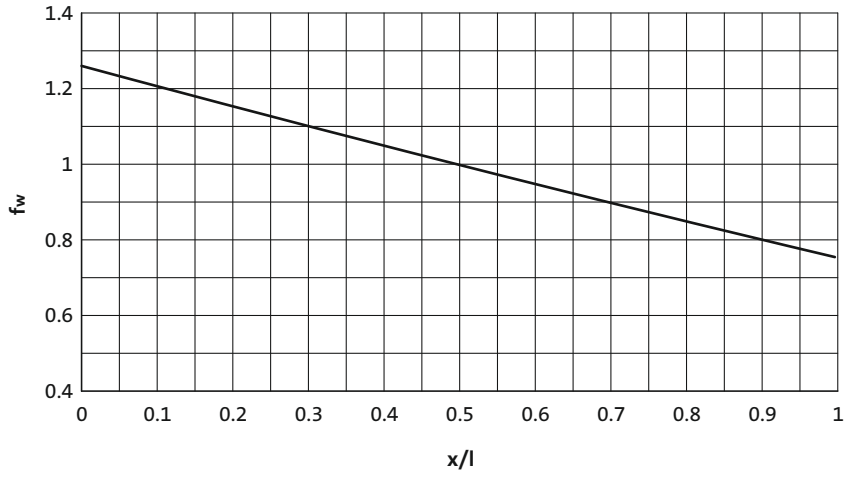

6.3.1

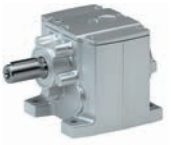

Permissible radial and axial forces at output

The values given in the table refer to the center shaft end force application point and are minimum values calculated according to the most unfavourable conditions (force application angle, mounting position, direction of rotation). The values were calculated for the motor/gearbox combination with a load capacity of c= 1.3 and an input speed of 1400 rpm.

► If the torque is transmitted via the flange face, max 50 % of the radial force $F_{rad,max}$ are permissible.

In case of different operating conditions, considerably higher forces can be transmitted. Please contact Lenze.

Product	n_2 [r/min]									
	1000	630	400	250	160	100	63	40	25	≤16

	Max. radial force, Solid shaft									
	$F_{rad,max}$	$F_{rad,max}$	$F_{rad,max}$	$F_{rad,max}$	$F_{rad,max}$	$F_{rad,max}$	$F_{rad,max}$	$F_{rad,max}$	$F_{rad,max}$	$F_{rad,max}$
	[N]	[N]	[N]	[N]	[N]	[N]	[N]	[N]	[N]	[N]
g500-H45	300	370	630	710	800	920	1100	1400	1500	1500
g500-H100	820	1000	1200	1450	1750	2120	2560	2650	2650	2650
g500-H140	1210	1750	2000	2300	2700	3300	3800	3800	3800	3800
g500-H210	1150	1600	2020	2390	2780	3360	3900	3900	4360	4800
g500-H320	1500	1900	2200	2600	3000	3500	4100	4800	5600	5700
g500-H450	1900	2200	2560	3000	3470	4050	4720	5480	6610	7100

	Max. radial force, Solid shaft (reinforced bearings))									
	$F_{rad,max}$	$F_{rad,max}$	$F_{rad,max}$	$F_{rad,max}$	$F_{rad,max}$	$F_{rad,max}$	$F_{rad,max}$	$F_{rad,max}$	$F_{rad,max}$	$F_{rad,max}$
	[N]	[N]	[N]	[N]	[N]	[N]	[N]	[N]	[N]	[N]
g500-H100	1020	1250	1500	1810	2190	2650	3200	3300	3300	3300
g500-H140	1510	2180	2500	2870	3370	4120	4750	4750	4750	4750
g500-H210	1430	2000	2520	2980	3470	4200	4870	4870	5450	6000
g500-H320	1870	2370	2750	3250	3750	4370	5120	6000	7000	7100
g500-H450	2370	2750	3200	3750	4330	5060	5900	6850	8260	8870



Moments of inertia

- The moments of inertia relate to the drive shaft of the gearbox.
- The total moment of inertia is calculated by adding the values of the gearbox, motor and accessories.

2-stage gearboxes

Product	Ratio	Moment of inertia
	i	J
		[kgcm²]
g500-H45	2.597	0.26
	3.413	0.17
	4.368	0.12
	5.312	0.18
	5.965	0.17
	6.982	0.12
	7.840	0.12
	8.935	0.089
	10.033	0.086
	11.429	0.059
	12.833	0.057
	14.836	0.041
	16.660	0.040
	19.013	0.028
	21.350	0.027
	24.595	0.019
	27.618	0.019
	32.000	0.012
	35.933	0.012
	41.455	0.008
	46.550	0.008
	52.909	0.005
	59.413	0.005
g500-H100	3.354	0.53
	4.600	0.34
	5.167	0.43
	5.887	0.24
	6.440	0.21
	7.086	0.28
	8.214	0.15
	9.068	0.20
	10.063	0.11
	11.360	0.17
	12.653	0.13
	14.490	0.13
	15.500	0.10
	17.750	0.10
	19.486	0.069
	22.314	0.067
	25.095	0.048
	28.738	0.047
	31.805	0.032
	36.422	0.031
	39.857	0.022
	45.643	0.022
	52.510	0.014
	60.133	0.013

Product	Ratio	Moment of inertia
	i	J
		[kgcm²]
g500-H140	3.267	0.90
	4.480	0.54
	5.733	0.36
	6.272	0.31
	7.269	0.51
	8.000	0.21
	9.029	0.34
	9.800	0.15
	11.554	0.24
	12.640	0.21
	13.957	0.20
	16.122	0.15
	17.802	0.14
	19.750	0.11
	21.808	0.11
	24.829	0.077
	27.415	0.074
	31.976	0.053
	35.308	0.051
	40.526	0.035
	44.748	0.034
	50.786	0.024
	56.077	0.024
	66.908	0.015
	73.879	0.014
g500-H210	3.389	1.53
	4.648	0.98
	5.583	1.24
	6.250	1.18
	7.657	0.82
	8.571	0.79
	9.799	0.59
	10.720	0.51
	12.000	0.50
	13.673	0.38
	15.306	0.36
	16.750	0.29
	18.750	0.28
	21.802	0.18
	24.405	0.18
	27.119	0.13
	30.357	0.13
	35.095	0.085
	39.286	0.083
	42.593	0.062
	47.679	0.061
	54.438	0.040
	60.938	0.039

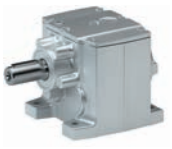

Moments of inertia

2-stage gearboxes

Product	Ratio	Moment of inertia
	i	J
		[kgcm²]
g500-H320	3.389	1.23
	4.648	0.81
	6.083	1.66
	6.910	1.51
	8.343	1.04
	9.477	0.97
	10.677	0.72
	11.680	0.63
	12.128	0.68
	13.268	0.59
	14.898	0.44
	16.923	0.42
	18.250	0.34
	20.731	0.32
	23.754	0.21
	26.983	0.20
	29.548	0.15
	33.564	0.15
	38.238	0.095
	43.436	0.092
	46.407	0.070
	52.715	0.067

Product	Ratio	Moment of inertia
	i	J
		[kgcm²]
g500-H450	3.444	4.94
	4.724	3.21
	5.678	3.64
	6.045	2.23
	6.613	1.98
	7.787	2.52
	8.800	2.40
	9.965	1.81
	11.262	1.74
	12.320	1.56
	13.905	1.21
	15.714	1.17
	17.033	0.95
	19.250	0.93
	22.170	0.53
	25.056	0.51
	27.578	0.39
	31.167	0.38
	35.689	0.24
	40.333	0.24
	43.313	0.18
	48.950	0.17
	54.750	0.12
	61.875	0.11

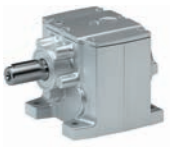

Moments of inertia

3-stage gearboxes

Product	Ratio	Moment of inertia
	i	J
		[kgcm²]
g500-H210	43.390	0.13
	48.571	0.13
	55.529	0.088
	62.160	0.088
	71.026	0.060
	79.507	0.059
	92.205	0.042
	103.214	0.042
	118.162	0.029
	132.270	0.029
	152.853	0.020
	198.873	0.014
	222.619	0.013
	257.631	0.003
	288.393	0.003
	368.080	0.006
g500-H320	47.276	0.13
	53.703	0.13
	60.502	0.093
	68.726	0.091
	77.387	0.062
	87.906	0.061
	100.462	0.044
	114.118	0.043
	128.743	0.030
	146.244	0.030
	166.541	0.021
	216.683	0.014
	246.137	0.014
	280.702	0.003
	318.859	0.003

Product	Ratio	Moment of inertia
	i	J
		[kgcm²]
g500-H450	44.124	0.36
	49.867	0.36
	56.469	0.25
	61.774	0.22
	69.813	0.22
	78.794	0.16
	89.048	0.15
	96.522	0.12
	109.083	0.12
	121.342	0.079
	137.133	0.078
	156.274	0.054
	176.611	0.054
	198.059	0.036
	223.833	0.035
	248.200	0.025
	280.500	0.025
	326.994	0.015
	369.548	0.015

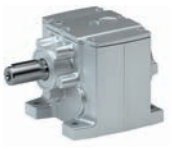

Additional weights for gearboxes

Product			g500-H45	g500-H100	g500-H140	g500-H210	g500-H320	g500-H450
Mass								
Foot	m	[kg]	0.1	0.1	0.2	0.1	0.1	0.2
Flange	m	[kg]	0.3	0.4	0.6	0.6	0.8	0.9

g500-S shaft-mounted helical geared motors

6 to 655 Nm

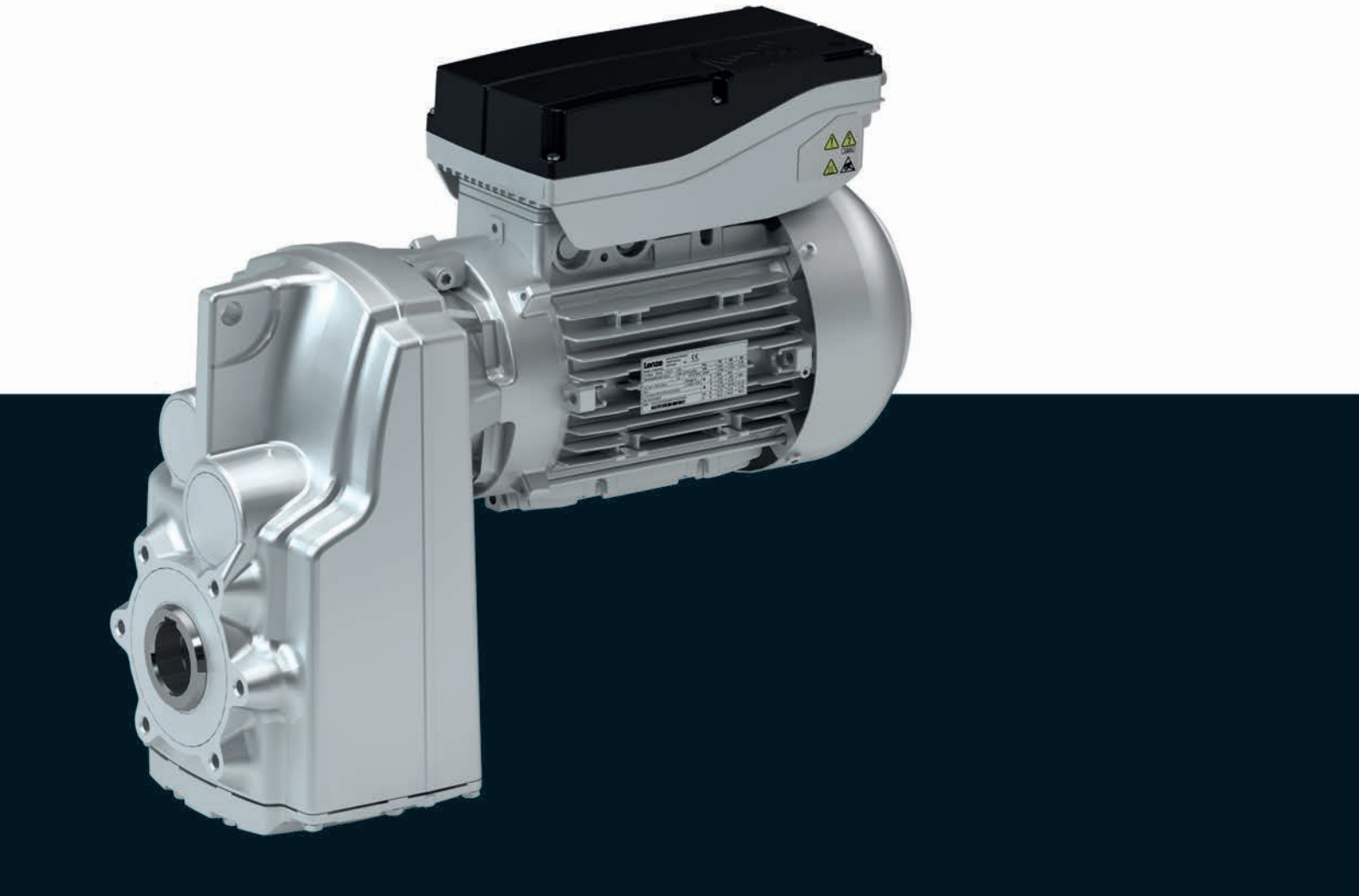

g500-S shaft-mounted helical geared motors

Contents



General information	List of abbreviations	6.4 - 5
	Product information	6.4 - 6
	Equipment	6.4 - 7
	The gearbox kit	6.4 - 8
	Dimensioning	6.4 - 14
Technical data	Selection tables, notes	6.4 - 17
	Selection tables	6.4 - 18
	Dimensions, notes	6.4 - 23
	Dimensions	6.4 - 24
	Weights	6.4 - 40
	Surface and corrosion protection	6.4 - 41

Contents





List of abbreviations

c		Load capacity
i		Ratio
m	[kg]	Mass
M_2	[Nm]	Output torque
M_{22}	[Nm]	Output torque
$M_{a_,1}$	[Nm]	Starting torque
$M_{a_,2}$	[Nm]	Starting torque
n_2	[r/min]	Output speed
n_{21}	[r/min]	Output speed
n_{22}	[r/min]	Output speed

CCC	China Compulsory Certificate
CE	Communauté Européenne
CSA	Canadian Standards Association
cURus	Combined certification marks of UL for the USA and Canada
DIN	Deutsches Institut für Normung e.V.
EMC	Electromagnetic compatibility
EN	European standard
GOST	Certificate for Russian Federation
IEC	International Electrotechnical Commission
IM	International Mounting Code
IP	International Protection Code
NEMA	National Electrical Manufacturers Association
UL	Underwriters Laboratory Listed Product
UR	Underwriters Laboratory Recognized Product
VDE	Verband deutscher Elektrotechniker (Association of German Electrical Engineers)

g500-S shaft-mounted helical geared motors

General information



Product information

In combination with three-phase AC motors, our shaft-mounted helical gearboxes form a compact and powerful drive unit. Numerous options at the input and output end provide for the drive to be exactly adapted to your application.

The slim shaft-mounted helical gearboxes feature high reliable radial forces, closely stepped gear reductions and a low backlash. They are available in 2-pole and 3-pole design with a torque up to 660 Nm and a ratio of up to i= 495.

Versions

- Slimline design saves installation space of the machine
- Solid shaft, hollow shaft and shrink disc for direct integration into the machine
- High accuracy with axial output provide for the highest efficiency
- With m300 Lenze Smart Motor, rated torque 1.75 Nm and 5 Nm

Gearbox type	Product range		Design	Rated torque [Nm]	Product
Shaft-mounted helical gearbox	g500	-	S	130	g500-S130
				220	g500-S220
				400	g500-S400
				660	g500-S660



Equipment

Overview

The equipment includes all the options available as standard and all the built-on accessories of the product.

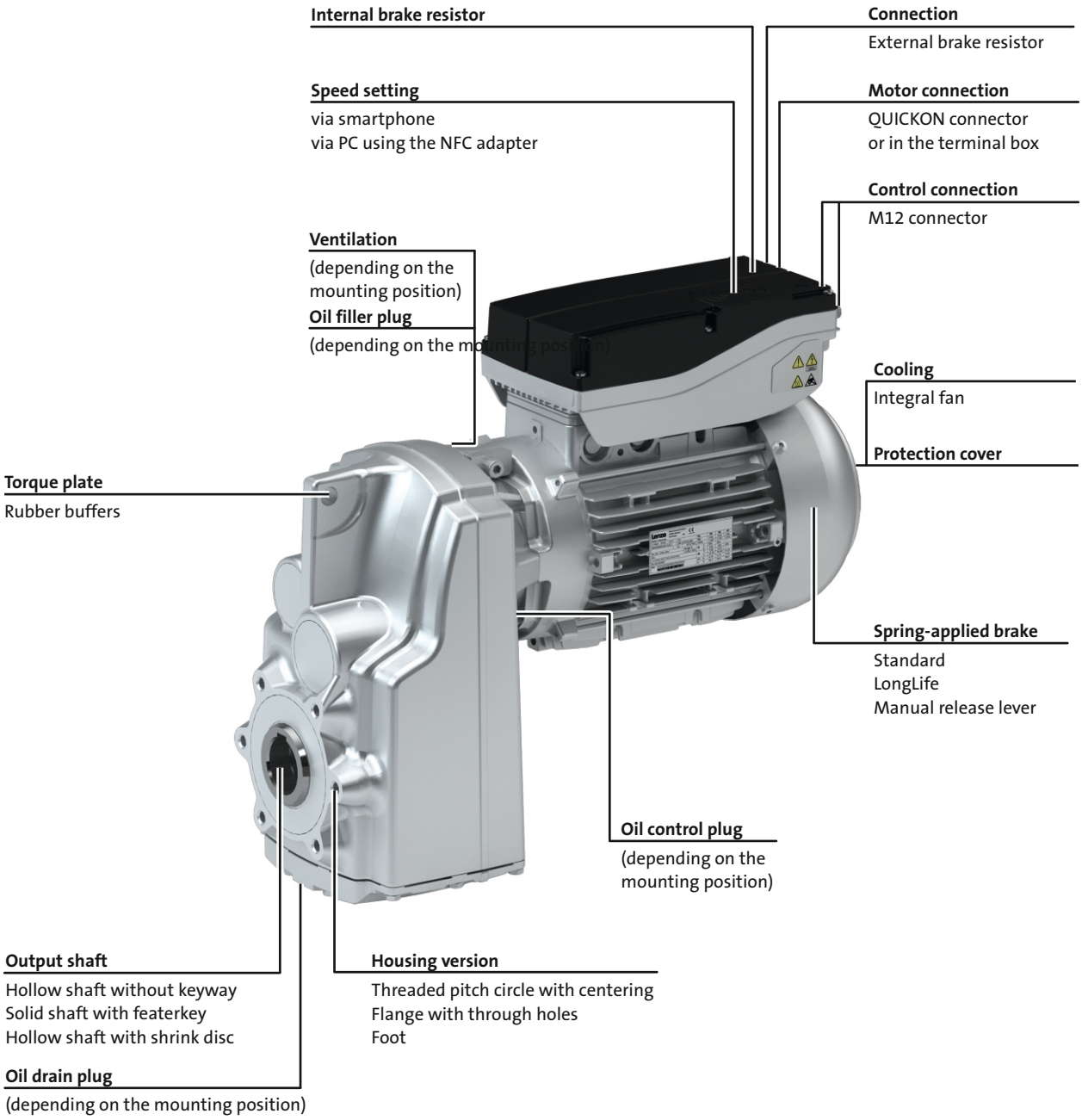



The gearbox kit

Geared motor

Product	g500-S130	g500-S220	g500-S400	g500-S660
Motor type	MSEMA AC motor			
Motor				
1.75 Nm	063			
5.0 Nm	080			
Technical data				
Starting torque $M_{a,1}$	See selection table			
Starting torque $M_{a,2}$	See selection table			
Output torque	See selection table			
Mains voltage	400 V ... 480 V			
Mains frequency	50 Hz ... 60 Hz			
Ratio	See selection table			
Mounting position				
Standard	A/B/C/D/E/F			
Combined	AEF			
Colour	Not coated Primed Paint in various corrosion-protection designs in accordance with RAL colours			
Surface and corrosion protection	Without OKS(uncoated) OKS-G (primed) - OKS-M (medium) OKS-L (large)			

Motor parameter setting

Motor parameter	
Output speed n_{min}	See selection table
Output speed n_{max}	See selection table
Output speed 1	Between n_{min} and n_{max}
Direction of rotation	Clockwise/Counterclockwise
Output speed 2	Between n_{min} and n_{max}
Direction of rotation	Clockwise/Counterclockwise
Output speed 3	Between n_{min} and n_{max}
Direction of rotation	Clockwise/Counterclockwise
Output speed 4	Between n_{min} and n_{max}
Direction of rotation	Clockwise/Counterclockwise
Output speed 5	Between n_{min} and n_{max}
Direction of rotation	Clockwise/Counterclockwise
Acceleration time	0.1 to 20 s
Deceleration time	0.1 to 20 s
Energy saving mode	On/Off



The gearbox kit

Mounting positions

► Mounting position (A to F) and position of system blocks (1 to 6)

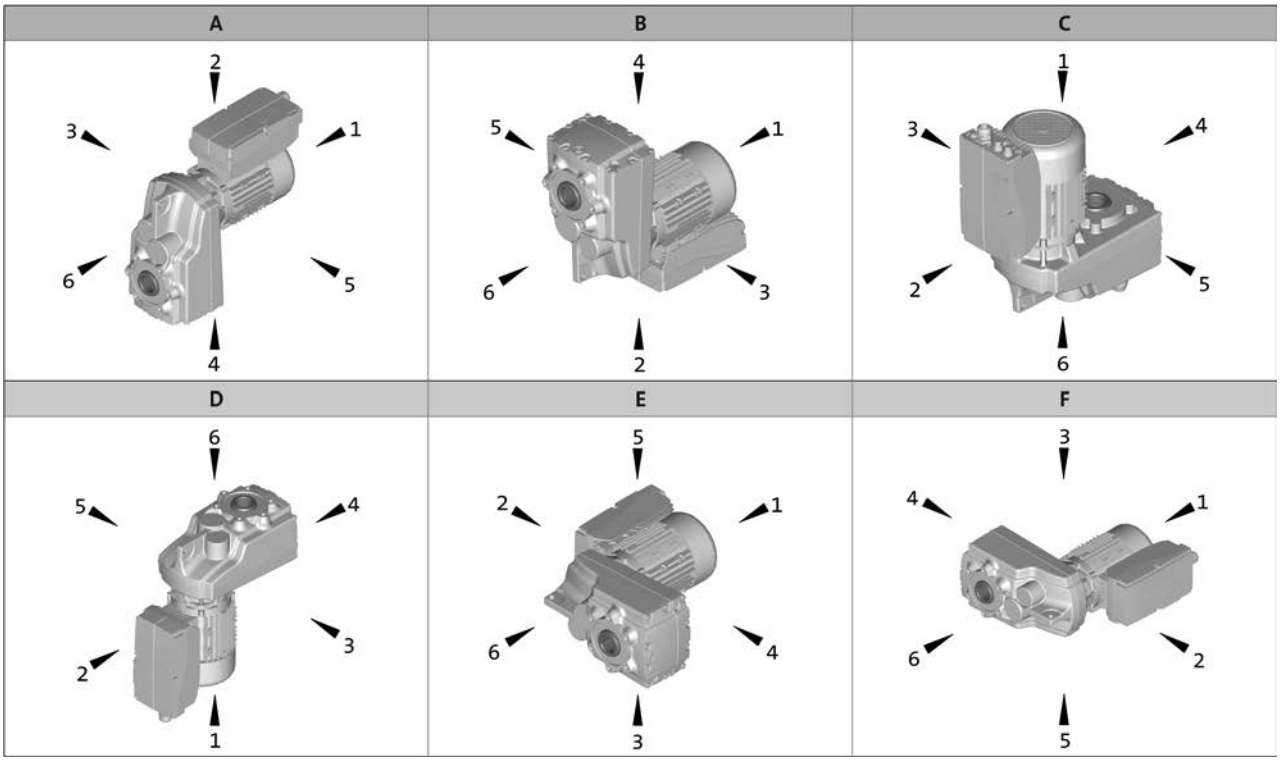

Hollow shaft: 0
Solid shaft: 6
Hollow shaft with shrink disc: 1, 6

Without foot: 0
Foot: 3, 4
Terminal box: 2, 3, 4, 5



The gearbox kit

Motor details

Product	MSEMA□□	
	063-42	080-32
Enclosure	IP55	
Connection type	Terminal box QUICKON-connector	
Spring-applied brake		
Rated torque [Nm]	4	8
Brake design	Standard LongLife	
Options	Manual release lever	
Cooling	Integral fan	
Further options	Brake resistor	

► Further information and installation feasibilities can be found in the Motors chapter.



The gearbox kit

Motor details

Connection type

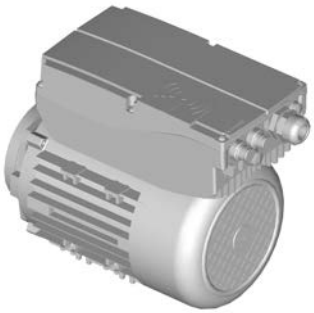

Terminal box

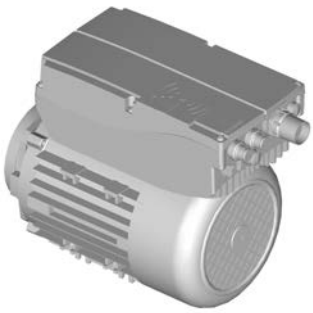

QUICKON-connector

Cooling: integral fan

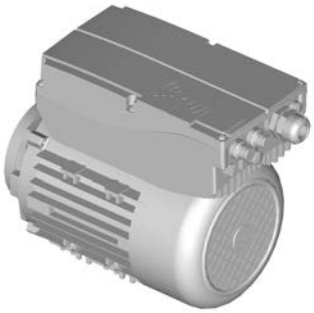

Without built-on accessories



With spring-applied brake
With or without manual release lever

Further options

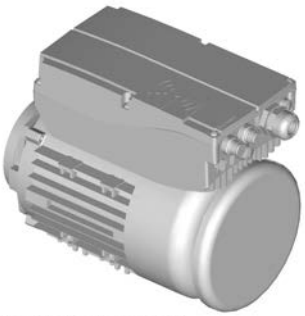

With protection cover



The gearbox kit

Gearbox details

Product	g500-S130	g500-S220	g500-S400	g500-S660
Driven shaft				
Solid shaft with featherkey [mm]	25x50		30x60	35x70 40x80
Hollow shaft with keyway [mm]	25	25/30	30/35	40/45
Hollow shaft with shrink disc [mm]	25	25/30	35	40
Design	Standard stainless steel			
Gasket	Standard FPM (Viton)			
Bearing	Standard			
Fitting grease	Not enclosed Enclosed			
Housing				
Housing version	With foot without centring With centering			
Output flange				
flange diameter [mm]	160		200	200/250 [1]
Lubricant				
Type	CLP 460 [2] CLP HC 320 CLP HC 220 CLP HC 220 USDA H1			
Oil-level inspection	Without inspection With inspection			
Breather element	Without		Standard mounting position: Mounted Combined mounting position: loosely enclosed	
Backlash				
Backlash	Standard			
Accessories				
Torque plate	Rubber buffers			
Shaft cover	Shrink disc: Rotating cover Shrink disc: Fixed cover			

[1] 200 mm flange diameter only possible on hollow shaft version.
[2] Not suitable for geared servo motors.

► Further information and installation feasibilities can be found in the Gearboxes chapter.



The gearbox kit

Gearbox details

Solid shaft

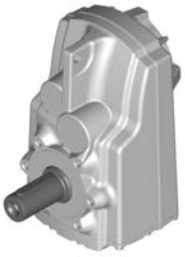

without centring

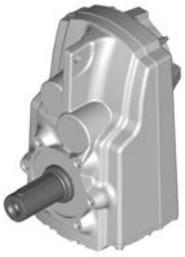

With centering



Flange with through holes

Hollow shaft



不带止口圆



止口圆对中



法兰带通孔

Hollow shaft with shrink disc



without centring



With centering



Flange with through holes

Accessories



Foot mounting



With rubber buffer

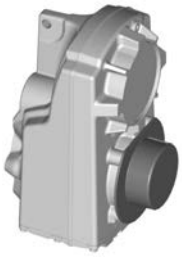

Shrink disc cover

6.4



Dimensioning

General information about the data provided in this catalogue

The powers, torques and speeds specified in this catalogue are rounded values and are valid under the following conditions:

- Operating time/day = 8 h (100% OT)
- Duty class I for up to 10 switching operations/h
- Mounting positions and designs in this catalogue
- Standard lubricant
- T_{amb} = 20 °C for gearboxes,
  T_{amb} = 40 °C for motors (in accordance with EN 60034)
- Site altitude < = 1000 m amsl
- The selection tables provide the permissible mechanical powers and torques.
- The rated power specified for motors and geared motors applies to operating mode S1 (in accordance with EN 60034).

Under different operating conditions, the values obtained may vary from those listed here.
In the case of extreme operating conditions, please consult your Lenze sales office.



Dimensioning

Weights

The values given in the tables consider the following gearbox/motor combination:
- Gearbox with hollow shaft without foot and flange including lubricant amount for mounting position A
- Motor without built-on accessories (with integral fan)

For versions deviating from this, additional weights have to be considered.

The respective values can be found for:
- Geared motors without built-on accessories
  > Chapter: Geared motors/Technical data
- Gearbox options
  > Chapter: Gearboxes/Technical data and accessories
- Motor options: Spring-applied brake, feedback, 2. Shaft end, handwheel and increased centrifugal mass
  > Chapter: Motors/Accessories

Moments of inertia

The given moments of inertia of the gearbox refer to the drive shaft. The influence of the ratio (i^2) has been considered in the data.

When the total moment of inertia of the geared motor is calculated, the values of the gearbox, motor and accessories have to be added.

The respective values can be found for:
- Gearboxes
  > Chapter: Gearbox/Technical data
- Motors without built-on accessories
  > Chapter: Motors/Technical data/Rated data
- Motor options: Spring-applied brake, feedback, 2. Shaft end, handwheel and increased centrifugal mass
  > Chapter: Motors/Accessories





Selection tables, notes

Notes on the selection tables with 4-pole motors

The selection tables show the available combinations of gearbox type, number of stages, ratio and motor. They are used only to provide basic orientation.
The following legend indicates the structure of the selection tables.

Max. torque M_{max} of the drive motor

M_{max} = 7.0 Nm

2-stage gearbox ← **Number of the gear stage of the gearbox**

Mains operation							Product		
Min. output speed		Max. output speed		Starting torque		i			
n_{21} [r/min]	M_2 [Nm]	n_2 [r/min]	M_2 [Nm]	$M_{a,1}$ [Nm]	$M_{a,2}$ [Nm]		g500	MSEMA□□	
137	6.0	710	6.0	25	43	3.661	-S130	063-42	22
100	9.0	518	9.0	34	59	5.021	-S130	063-42	22
78	11	405	11	44	71	6.425	-S130	063-42	22
71	12	370	12	48	77	7.029	-S130	063-42	22

n_{21} is the minimum speed where the torque **M_2** is permissible.

n_2 is the maximum speed where the torque **M_2** is permissible.

Maximally permissible starting torque which is available for up to 500,000 switching cycles

Maximally permissible starting torque which is available for up to 20 million switching cycles

Ratio i

Product Gearbox

Product Motor

Page number for dimensions

Torque diagram

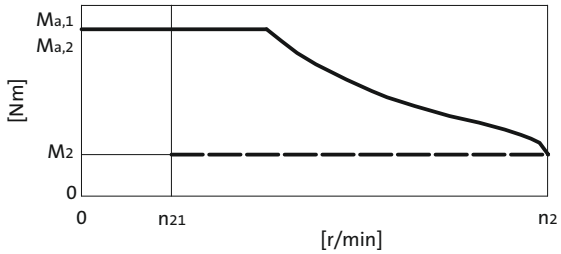



Selection tables

M_{max} = 7.0 Nm

2-stage gearboxes

Mains operation						i	Product		
Min. output speed		Max. output speed		Starting torque					
n_{21} [r/min]	M_2 [Nm]	n_2 [r/min]	M_2 [Nm]	$M_{a,1}$ [Nm]	$M_{a,2}$ [Nm]		g500	MSEMA□□	
137	6.0	710	6.0	25	25	3.661	-S130	063-42	24
100	9.0	518	9.0	34	34	5.021	-S130	063-42	24
78	11	405	11	44	44	6.425	-S130	063-42	24
71	12	370	12	48	48	7.029	-S130	063-42	24
60	14	312	14	57	57	8.322	-S130	063-42	24
53	16	276	16	64	64	9.411	-S130	063-42	24
44	19	228	19	78	78	11.413	-S130	063-42	24
39	22	201	22	88	88	12.907	-S130	063-42	24
34	25	178	25	99	99	14.606	-S130	063-42	24
31	27	163	27	109	109	15.979	-S130	063-42	24
28	31	144	31	123	123	18.069	-S130	063-42	24
25	35	128	35	130	138	20.381	-S130	063-42	24
22	39	113	39	130	157	23.048	-S130	063-42	24
20	42	104	42	130	163	24.967	-S130	063-42	24
18	48	92	48	130	163	28.233	-S130	063-42	24
16	53	83	53	130	163	31.387	-S130	063-42	24
14	60	73	60	130	163	35.493	-S130	063-42	24
12	69	64	69	130	143	40.422	-S130	063-42	24
12	72	61	72	220	242	42.533	-S220	063-42	28
11	78	57	78	130	143	45.711	-S130	063-42	24
11	80	55	80	259	285	46.933	-S400	063-42	32
10	82	54	82	220	242	48.190	-S220	063-42	28
10	83	53	83	264	291	48.950	-S660	063-42	36
9.8	87	51	87	130	143	51.230	-S130	063-42	24
9.7	88	50	88	220	242	51.620	-S220	063-42	28
9.5	90	49	90	293	322	53.026	-S400	063-42	32
9.0	95	47	95	301	331	55.773	-S660	063-42	36
8.8	97	46	97	266	293	56.960	-S400	063-42	32
8.7	98	45	98	130	143	57.933	-S130	063-42	24
8.6	99	44	99	220	242	58.486	-S220	063-42	28
7.8	109	40	109	130	143	64.200	-S130	063-42	24
7.8	109	40	109	301	331	64.354	-S400	063-42	32
7.6	112	39	112	152	167	65.975	-S220	063-42	28
6.9	123	36	123	130	143	72.600	-S130	063-42	24
6.7	127	35	127	172	190	74.750	-S220	063-42	28



Selection tables

M_{max} = 7.0 Nm

3-stage gearboxes

Mains operation						i	Product		
Min. output speed		Max. output speed		Starting torque					
n_{21} [r/min]	M_2 [Nm]	n_2 [r/min]	M_2 [Nm]	$M_{a,1}$ [Nm]	$M_{a,2}$ [Nm]		g500	MSEMA□□	
13	67	65	67	220	268	40.012	-S220	063-42	28
11	76	57	76	220	275	45.333	-S220	063-42	28
9.6	88	49	88	220	275	52.587	-S220	063-42	28
8.4	100	44	100	220	275	59.581	-S220	063-42	28
7.5	113	39	113	220	275	67.298	-S220	063-42	28
6.8	124	35	124	400	497	74.260	-S400	063-42	32
6.6	128	34	128	220	275	76.249	-S220	063-42	28
6.0	140	31	140	400	500	83.900	-S400	063-42	32
5.9	144	30	144	220	275	86.079	-S220	063-42	28
5.3	159	27	159	400	500	94.984	-S400	063-42	32
5.2	163	27	163	220	275	97.528	-S220	063-42	28
4.7	179	24	179	399	499	107.314	-S400	063-42	32
4.5	187	23	187	220	275	111.747	-S220	063-42	28
4.1	206	21	206	400	500	123.307	-S400	063-42	32
4.1	208	21	208	660	825	124.289	-S660	063-42	36
4.0	212	21	212	220	275	126.610	-S220	063-42	28
3.7	229	19	229	660	825	137.133	-S660	063-42	36
3.6	233	19	233	399	498	139.313	-S400	063-42	32
3.5	239	18	239	220	275	143.205	-S220	063-42	28
3.3	261	17	261	660	825	156.249	-S660	063-42	36
3.2	264	16	264	399	499	158.019	-S400	063-42	32
3.1	271	16	271	220	275	162.252	-S220	063-42	28
2.9	295	15	295	660	726	176.611	-S660	063-42	36
2.9	299	15	299	400	500	178.531	-S400	063-42	32
2.5	337	13	337	660	726	201.230	-S660	063-42	36
2.5	342	13	342	400	440	204.412	-S400	063-42	32
2.3	374	12	374	660	726	223.833	-S660	063-42	36
2.2	386	11	386	396	435	230.946	-S400	063-42	32
2.0	427	10	427	660	726	255.034	-S660	063-42	36
1.9	445	9.7	445	388	427	265.956	-S400	063-42	32
1.8	469	9.2	469	562	618	280.500	-S660	063-42	36
1.6	535	8.1	535	640	704	319.600	-S660	063-42	36



Selection tables

M_{max} = 20 Nm

2-stage gearboxes

Mains operation						i	Product		
Min. output speed		Max. output speed		Starting torque					
n_{21} [r/min]	M_2 [Nm]	n_2 [r/min]	M_2 [Nm]	$M_{a,1}$ [Nm]	$M_{a,2}$ [Nm]		g500	MSEMA□□	
150	16	779	16	65	65	3.339	-S400	080-32	32
137	18	710	18	63	71	3.661	-S130	080-32	24
130	19	677	19	75	75	3.840	-S220	080-32	28
100	24	518	24	76	95	5.021	-S130	080-32	24
85	28	444	28	114	114	5.860	-S400	080-32	32
78	31	406	31	124	124	6.411	-S400	080-32	32
78	31	405	31	87	109	6.425	-S130	080-32	24
74	33	384	33	131	131	6.767	-S220	080-32	28
71	34	370	34	92	115	7.029	-S130	080-32	24
67	36	348	36	145	145	7.467	-S400	080-32	32
65	37	339	37	149	149	7.667	-S220	080-32	28
60	40	312	40	116	145	8.322	-S130	080-32	24
59	41	308	41	164	164	8.436	-S400	080-32	32
53	46	276	46	125	156	9.411	-S130	080-32	24
44	55	228	55	130	163	11.413	-S130	080-32	24
42	58	219	58	220	231	11.876	-S220	080-32	28
39	63	201	63	130	163	12.907	-S130	080-32	24
39	63	200	63	220	252	12.992	-S220	080-32	28
38	64	198	64	254	254	13.105	-S400	080-32	32
37	65	193	65	220	261	13.456	-S220	080-32	28
35	70	181	70	278	278	14.336	-S400	080-32	32
34	71	178	71	130	163	14.606	-S130	080-32	24
34	71	177	71	220	275	14.720	-S220	080-32	28
34	72	176	72	287	287	14.806	-S400	080-32	32
32	76	165	76	305	305	15.714	-S660	080-32	36
31	78	163	78	130	163	15.979	-S130	080-32	24
31	79	161	79	314	314	16.197	-S400	080-32	32
30	80	157	80	220	275	16.571	-S220	080-32	28
28	87	145	87	347	347	17.905	-S660	080-32	36
28	88	144	88	130	163	18.069	-S130	080-32	24
27	89	142	89	348	355	18.286	-S400	080-32	32
27	91	138	91	220	275	18.776	-S220	080-32	28
25	98	128	98	220	275	20.300	-S220	080-32	28
25	99	128	99	130	163	20.381	-S130	080-32	24
24	100	126	100	393	401	20.659	-S400	080-32	32



Selection tables

M_{max} = 20 Nm

2-stage gearboxes

Mains operation						i	Product		
Min. output speed		Max. output speed		Starting torque					
n_{21} [r/min]	M_2 [Nm]	n_2 [r/min]	M_2 [Nm]	$M_{a,1}$ [Nm]	$M_{a,2}$ [Nm]		g500	MSEMA□□	
22	109	116	109	380	435	22.400	-S400	080-32	32
22	112	113	112	220	275	23.000	-S220	080-32	28
22	112	113	112	130	163	23.048	-S130	080-32	24
20	121	104	121	130	163	24.967	-S130	080-32	24
20	122	104	122	425	486	25.056	-S660	080-32	36
20	123	103	123	400	491	25.308	-S400	080-32	32
19	128	98	128	220	275	26.422	-S220	080-32	28
18	137	92	137	130	163	28.233	-S130	080-32	24
18	138	91	138	484	554	28.548	-S660	080-32	36
17	141	89	141	400	500	29.156	-S400	080-32	32
17	145	87	145	220	275	29.937	-S220	080-32	28
16	151	83	151	446	490	31.167	-S660	080-32	36
16	152	83	152	130	163	31.387	-S130	080-32	24
15	159	79	159	220	242	32.867	-S220	080-32	28
15	160	79	160	400	500	32.940	-S400	080-32	32
14	172	73	172	508	559	35.511	-S660	080-32	36
14	176	72	176	400	440	36.267	-S400	080-32	32
14	181	70	181	220	242	37.238	-S220	080-32	28
12	196	64	196	525	578	40.333	-S660	080-32	36
12	199	63	199	400	440	40.974	-S400	080-32	32
12	206	61	206	220	242	42.533	-S220	080-32	28
11	223	57	223	598	658	45.956	-S660	080-32	36
11	228	55	228	314	346	46.933	-S400	080-32	32
10	234	54	234	220	242	48.190	-S220	080-32	28
10	237	53	237	446	491	48.950	-S660	080-32	36
9.7	250	50	250	220	242	51.620	-S220	080-32	28
9.5	257	49	257	348	383	53.026	-S400	080-32	32
9.0	271	47	271	508	559	55.773	-S660	080-32	36
8.8	276	46	276	268	295	56.960	-S400	080-32	32
7.8	312	40	312	302	333	64.354	-S400	080-32	32

3-stage gearboxes

Mains operation						i	Product		
Min. output speed		Max. output speed		Starting torque					
n_{21} [r/min]	M_2 [Nm]	n_2 [r/min]	M_2 [Nm]	$M_{a,1}$ [Nm]	$M_{a,2}$ [Nm]		g500	MSEMA□□	
10	238	52	238	625	781	49.867	-S660	080-32	36
9.6	251	49	251	220	275	52.587	-S220	080-32	28
8.9	271	46	271	650	813	56.818	-S660	080-32	36
8.7	277	45	277	400	500	58.027	-S400	080-32	32
7.9	305	41	305	660	825	63.817	-S660	080-32	36



Selection tables

M_{max} = 20 Nm

3-stage gearboxes

Mains operation						i	Product		
Min. output speed		Max. output speed		Starting torque					
n_{21} [r/min]	M_2 [Nm]	n_2 [r/min]	M_2 [Nm]	$M_{a,1}$ [Nm]	$M_{a,2}$ [Nm]		g500	MSEMA□□	
7.7	313	40	313	400	500	65.559	-S400	080-32	32
7.2	334	37	334	660	825	69.813	-S660	080-32	36
6.9	347	36	347	660	825	72.713	-S660	080-32	36
6.8	355	35	355	400	500	74.260	-S400	080-32	32
6.3	380	33	380	660	825	79.545	-S660	080-32	36
6.0	401	31	401	400	500	83.900	-S400	080-32	32
5.7	426	29	426	660	825	89.048	-S660	080-32	36
5.3	454	27	454	400	500	94.984	-S400	080-32	32
5.0	485	26	485	660	825	101.460	-S660	080-32	36
4.6	521	24	521	660	825	109.083	-S660	080-32	36
4.1	594	21	594	660	825	124.289	-S660	080-32	36
3.7	655	19	655	660	825	137.133	-S660	080-32	36
3.3	747	17	747	660	825	156.249	-S660	080-32	36



Dimensions, notes

Notes on the dimensions

The following legend shows the layout of the dimension sheets.

Product gearbox

g500-S130

Driven shaft design

Abmessungen mit Hohlwelle

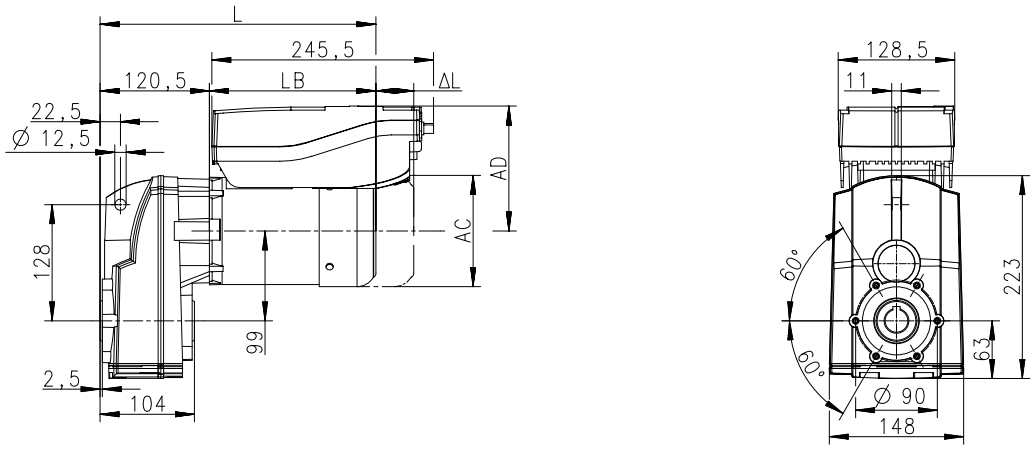

Product Motor

Produkt			MSEMA□□
			063-42
Abmessungen			
Gesamtlänge	**L**	**[mm]**	308
Länge Motor	**LB**	**[mm]**	187
Länge Motoranbauten	**Δ L**	**[mm]**	40
Motordurchmesser	**AC**	**[mm]**	123
Abstand Motor/Anschluss	**AD**	**[mm]**	140.5

Distance of motor centre to the end of terminal box

Total length of the drive without built-on accessories

Motor diameter

Motor length without built-on accessories

Additional length of the built-on accessories (longest version)



Dimensions

g500-S130

Dimensions with hollow shaft

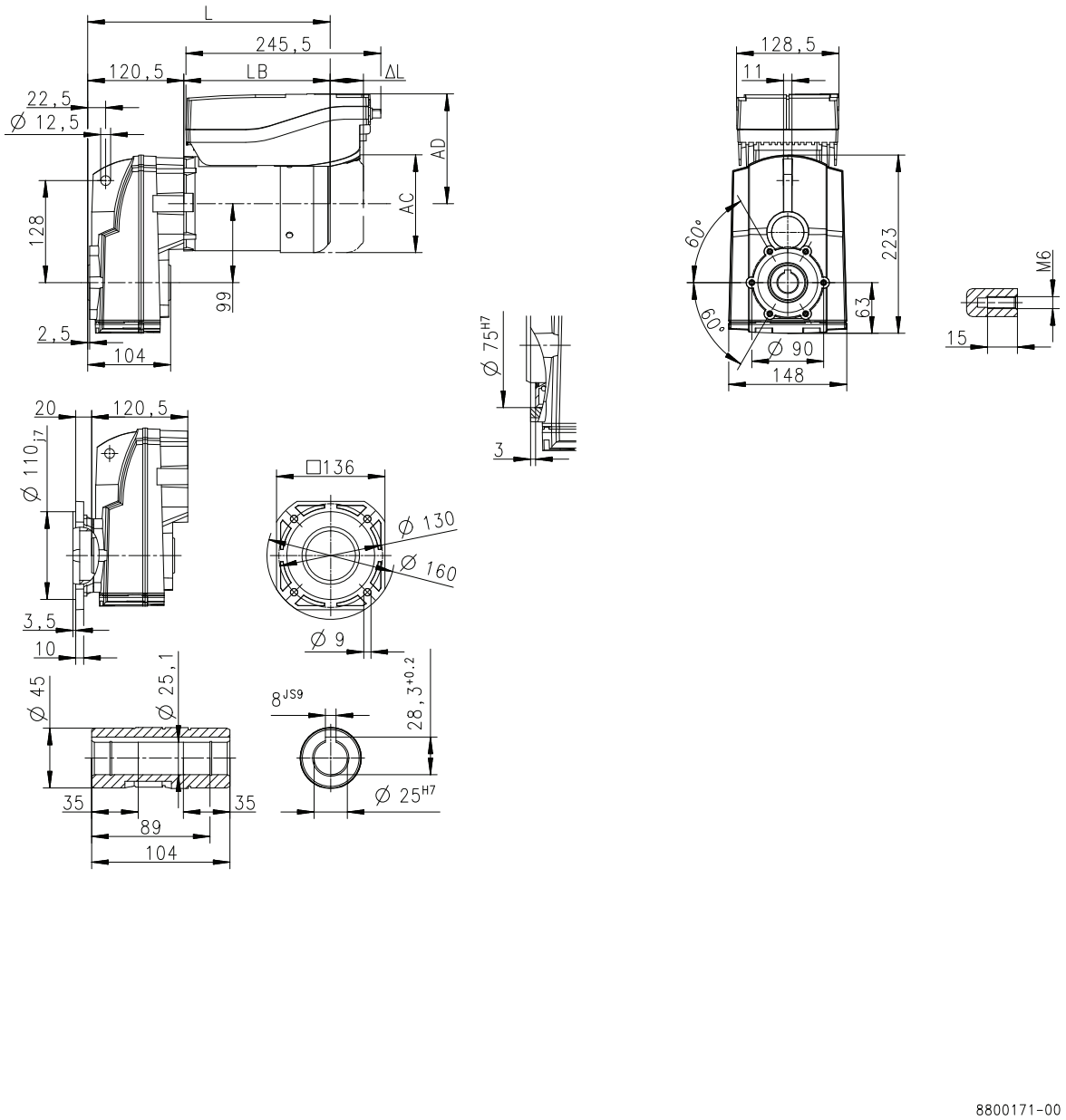

8800171-00

Product			MSEMA□□	
			063-42	080-32
Dimensions				
Total length	**L**	**[mm]**	308	347
Motor length	**LB**	**[mm]**	187	226
Length of motor options	**Δ L**	**[mm]**	40	73
Motor diameter	**AC**	**[mm]**	123	156
Distance motor/connection	**AD**	**[mm]**	140.5	158.5



Dimensions

g500-S130

Dimensions with solid shaft

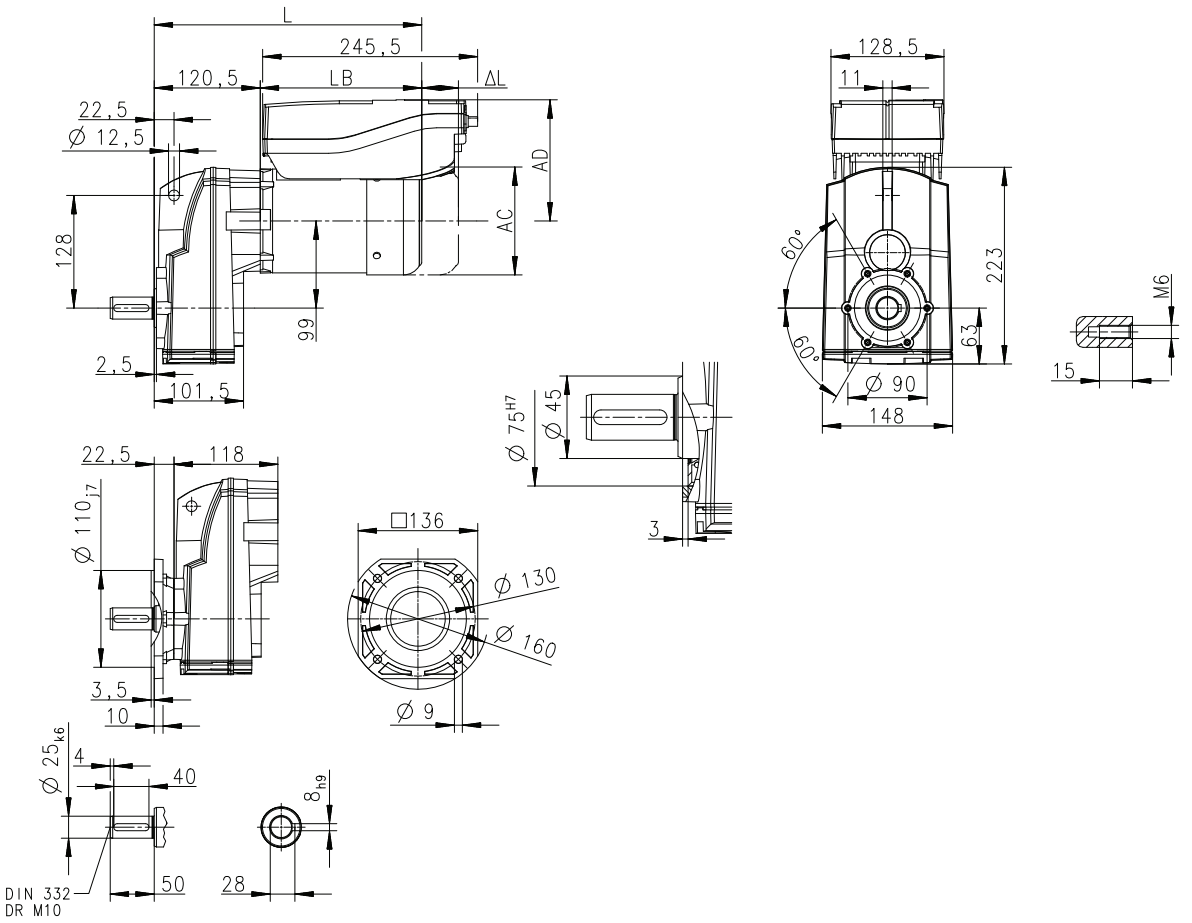

Product			MSEMA□□	
			063-42	080-32
Dimensions				
Total length	**L**	**[mm]**	308	347
Motor length	**LB**	**[mm]**	187	226
Length of motor options	**Δ L**	**[mm]**	40	73
Motor diameter	**AC**	**[mm]**	123	156
Distance motor/connection	**AD**	**[mm]**	140.5	158.5



Dimensions

g500-S130

Dimensions with solid shaft and foot

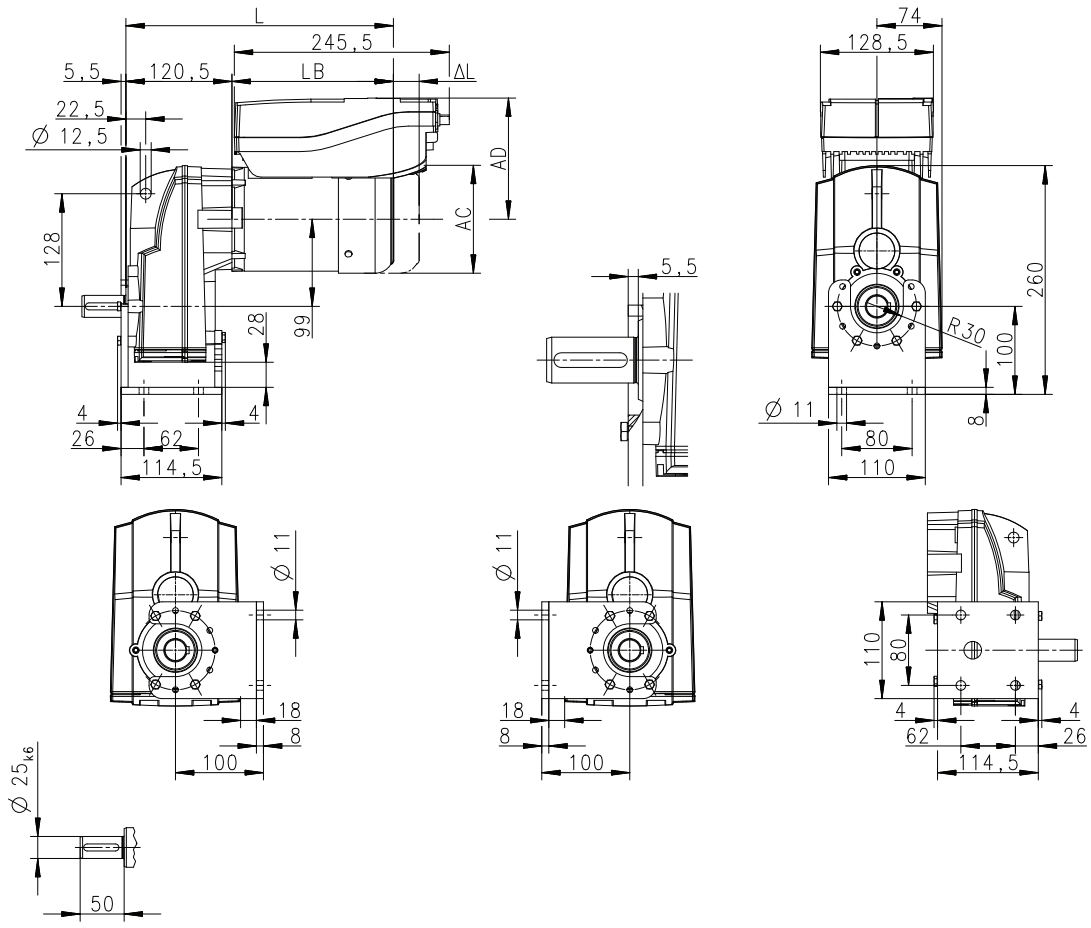

Product			MSEMA□□	
			063-42	080-32
Dimensions				
Total length	**L**	**[mm]**	308	347
Motor length	**LB**	**[mm]**	187	226
Length of motor options	**Δ L**	**[mm]**	40	73
Motor diameter	**AC**	**[mm]**	123	156
Distance motor/connection	**AD**	**[mm]**	140.5	158.5



Dimensions

g500-S130

Dimensions with shrink disc

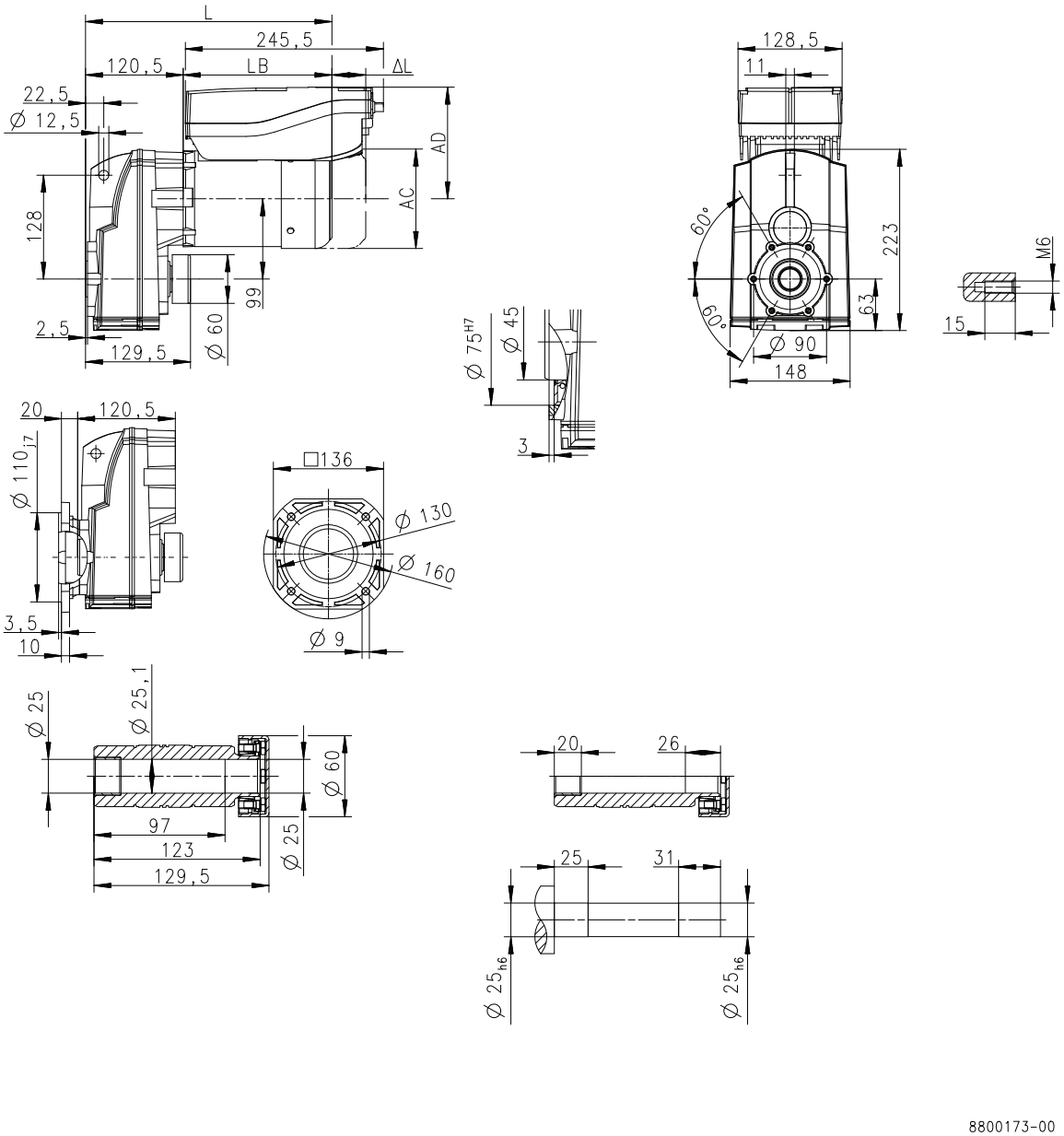

Product			MSEMA□□	
			063-42	080-32
Dimensions				
Total length	**L**	**[mm]**	308	347
Motor length	**LB**	**[mm]**	187	226
Length of motor options	**Δ L**	**[mm]**	40	73
Motor diameter	**AC**	**[mm]**	123	156
Distance motor/connection	**AD**	**[mm]**	140.5	158.5



Dimensions

g500-S220

Dimensions with hollow shaft

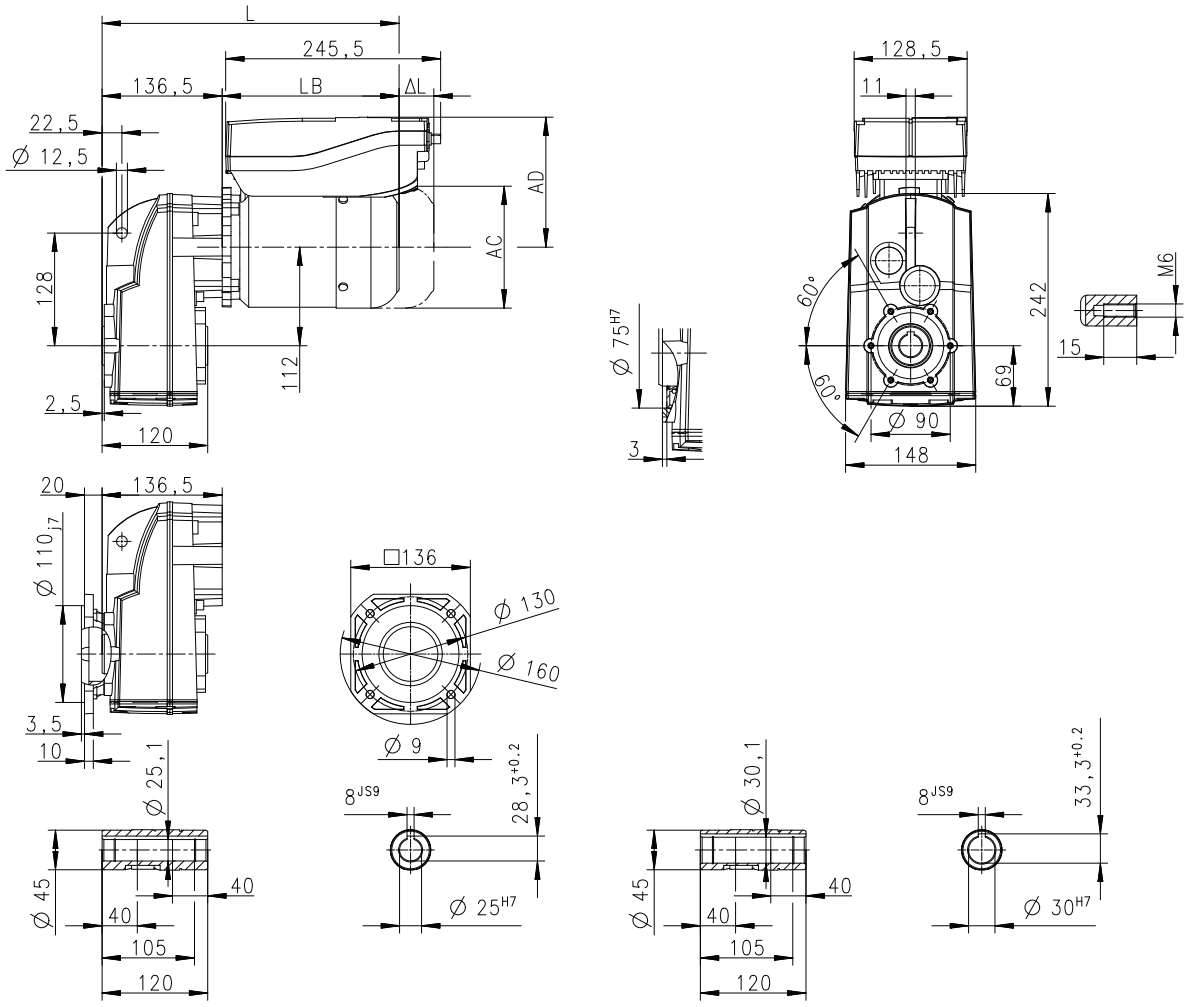

Product			MSEMA□□	
			063-42	080-32
Dimensions				
Total length	**L**	**[mm]**	324	363
Motor length	**LB**	**[mm]**	187	226
Length of motor options	**Δ L**	**[mm]**	40	73
Motor diameter	**AC**	**[mm]**	123	156
Distance motor/connection	**AD**	**[mm]**	140.5	158.5



Dimensions

g500-S220

Dimensions with solid shaft

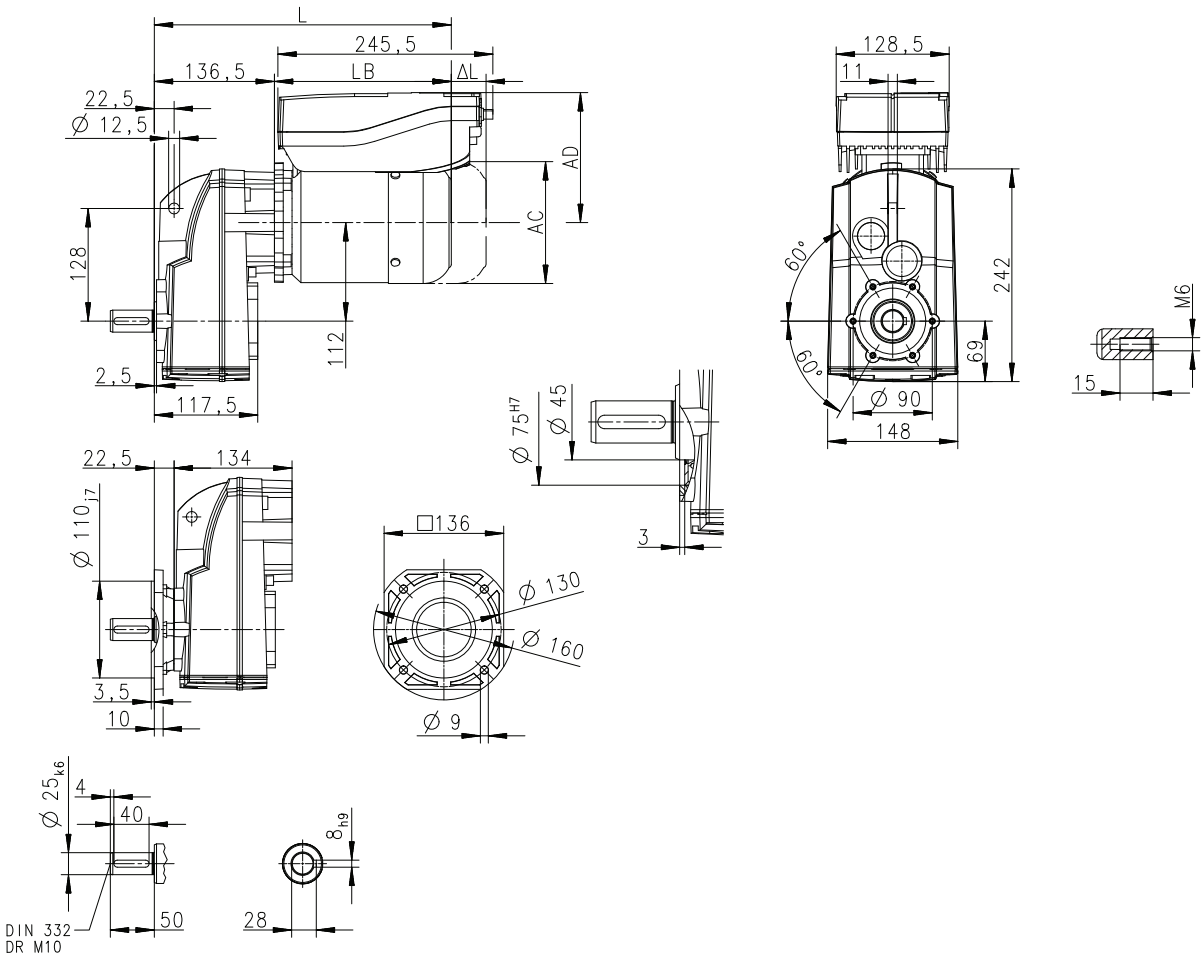

Product			MSEMA□□	
			063-42	080-32
Dimensions				
Total length	**L**	**[mm]**	324	363
Motor length	**LB**	**[mm]**	187	226
Length of motor options	**Δ L**	**[mm]**	40	73
Motor diameter	**AC**	**[mm]**	123	156
Distance motor/connection	**AD**	**[mm]**	140.5	158.5



Dimensions

g500-S220

Dimensions with solid shaft and foot

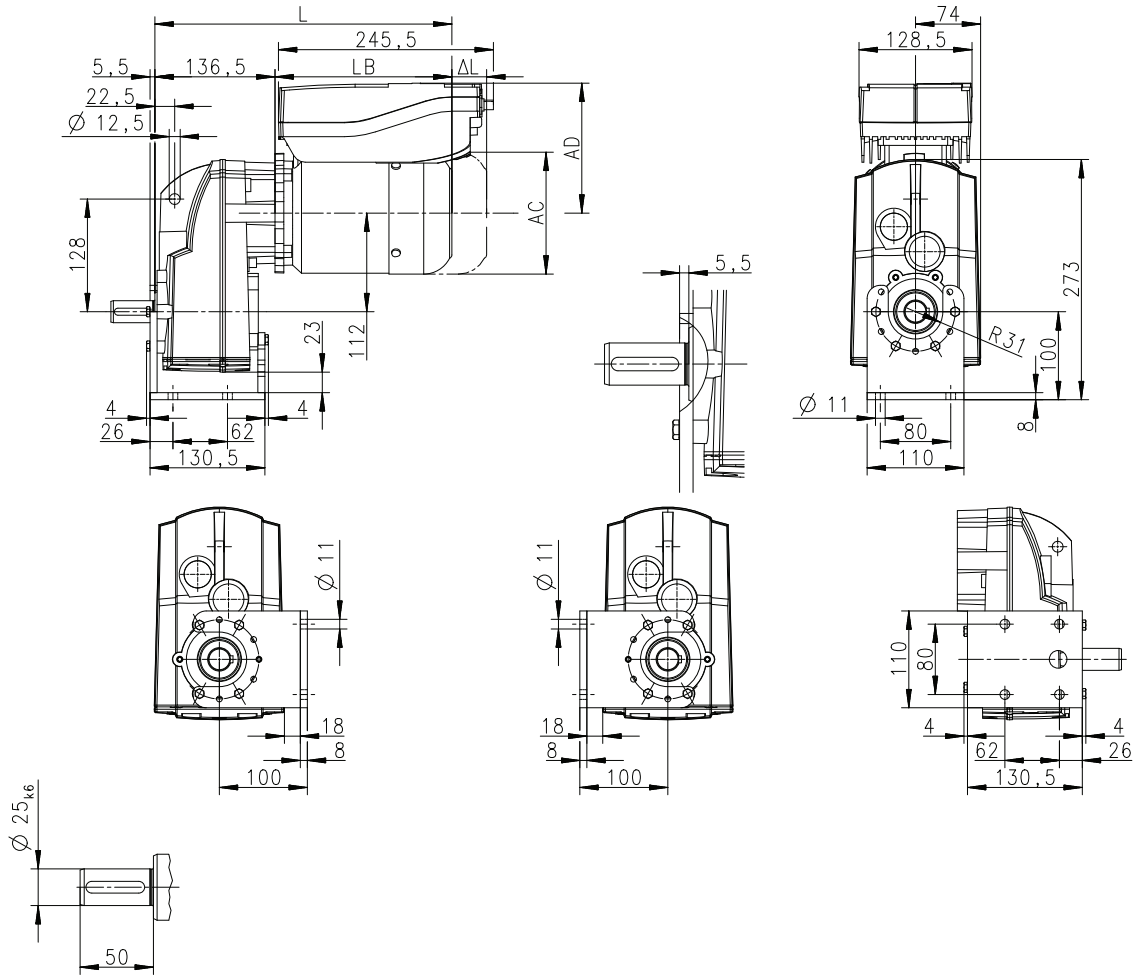

Product			MSEMA□□	
			063-42	080-32
Dimensions				
Total length	**L**	**[mm]**	324	363
Motor length	**LB**	**[mm]**	187	226
Length of motor options	**Δ L**	**[mm]**	40	73
Motor diameter	**AC**	**[mm]**	123	156
Distance motor/connection	**AD**	**[mm]**	140.5	158.5



Dimensions

g500-S220

Dimensions with shrink disc

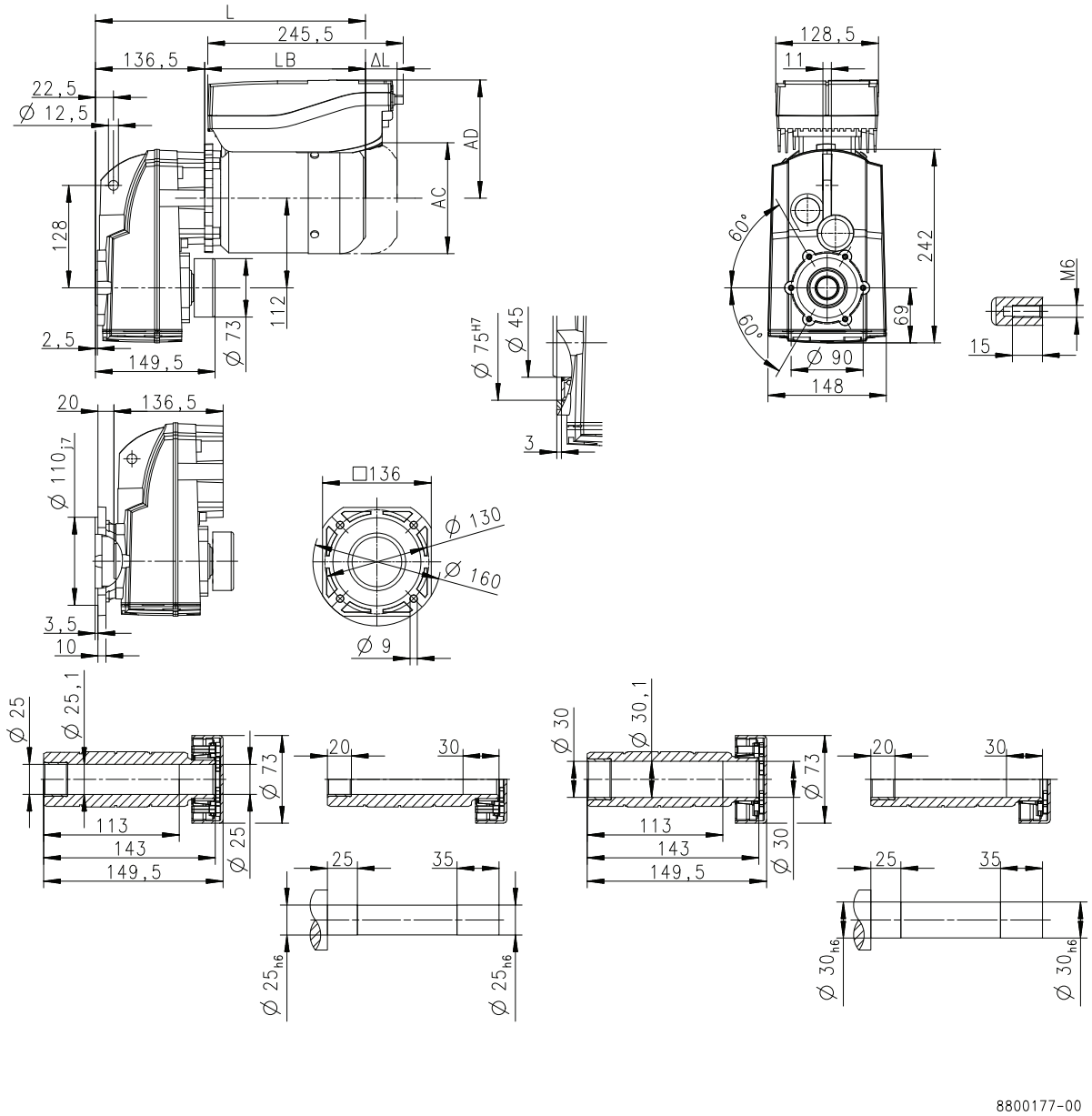

Product			MSEMA□□	
			063-42	080-32
Dimensions				
Total length	**L**	**[mm]**	324	363
Motor length	**LB**	**[mm]**	187	226
Length of motor options	**Δ L**	**[mm]**	40	73
Motor diameter	**AC**	**[mm]**	123	156
Distance motor/connection	**AD**	**[mm]**	140.5	158.5



Dimensions

g500-S400

Dimensions with hollow shaft

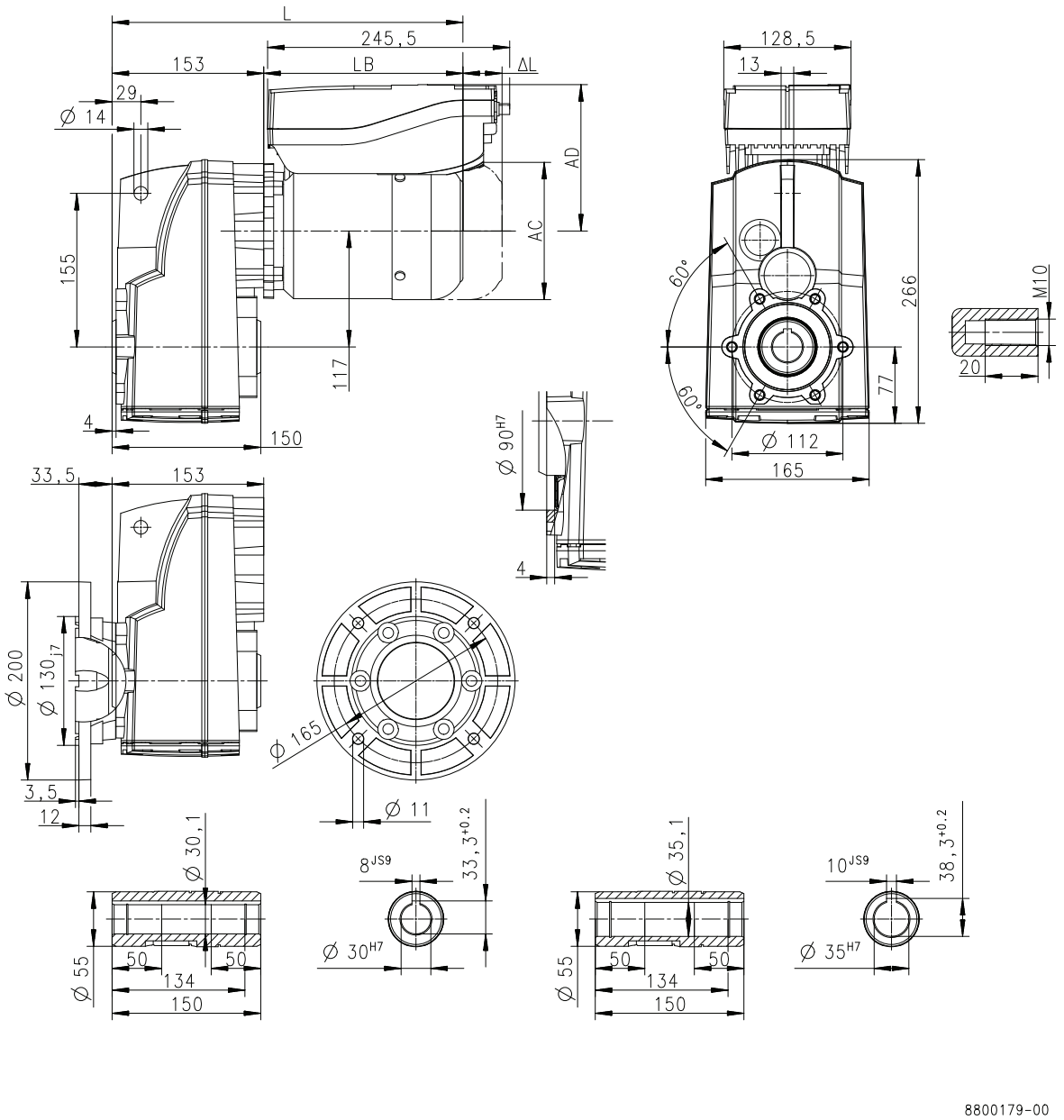

Product			MSEMA□□	
			063-42	080-32
Dimensions				
Total length	**L**	**[mm]**	340	379
Motor length	**LB**	**[mm]**	187	226
Length of motor options	**Δ L**	**[mm]**	40	73
Motor diameter	**AC**	**[mm]**	123	156
Distance motor/connection	**AD**	**[mm]**	140.5	158.5



Dimensions

g500-S400

Dimensions with solid shaft

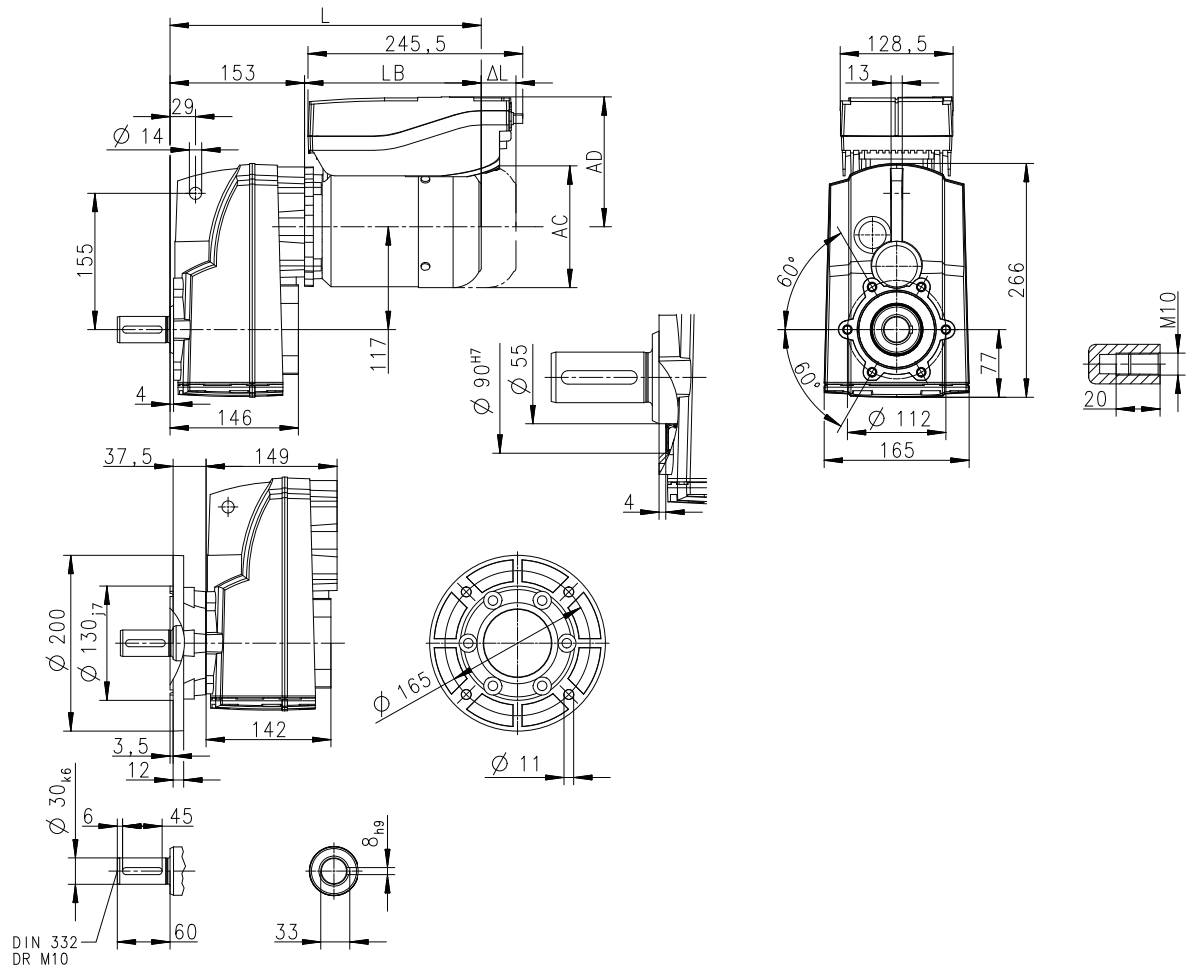

Product			MSEMA□□	
			063-42	080-32
Dimensions				
Total length	**L**	**[mm]**	340	379
Motor length	**LB**	**[mm]**	187	226
Length of motor options	**Δ L**	**[mm]**	40	73
Motor diameter	**AC**	**[mm]**	123	156
Distance motor/connection	**AD**	**[mm]**	140.5	158.5



Dimensions

g500-S400

Dimensions with solid shaft and foot

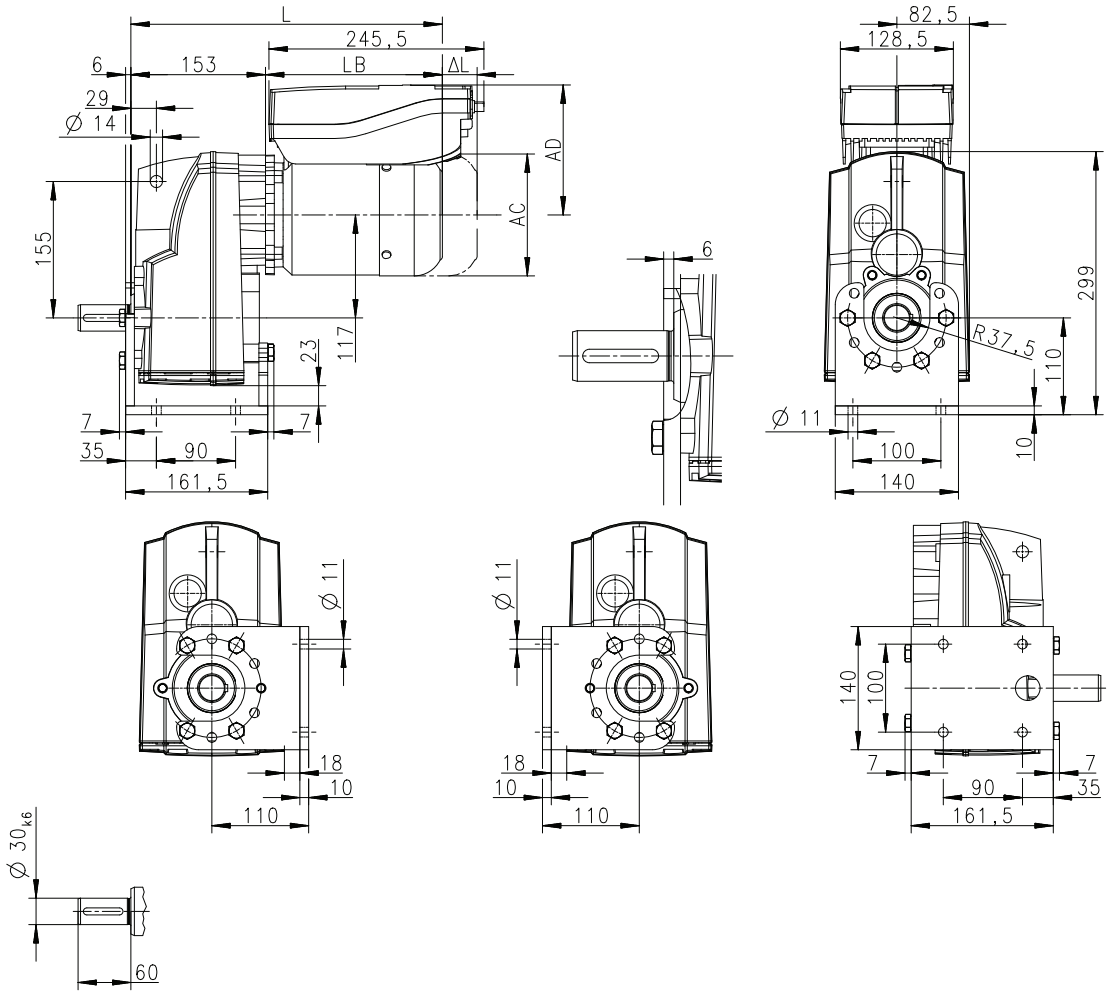

8800182-00

Product			MSEMA□□	
			063-42	080-32
Dimensions				
Total length	**L**	**[mm]**	340	379
Motor length	**LB**	**[mm]**	187	226
Length of motor options	**Δ L**	**[mm]**	40	73
Motor diameter	**AC**	**[mm]**	123	156
Distance motor/connection	**AD**	**[mm]**	140.5	158.5



Dimensions

g500-S400

Dimensions with shrink disc

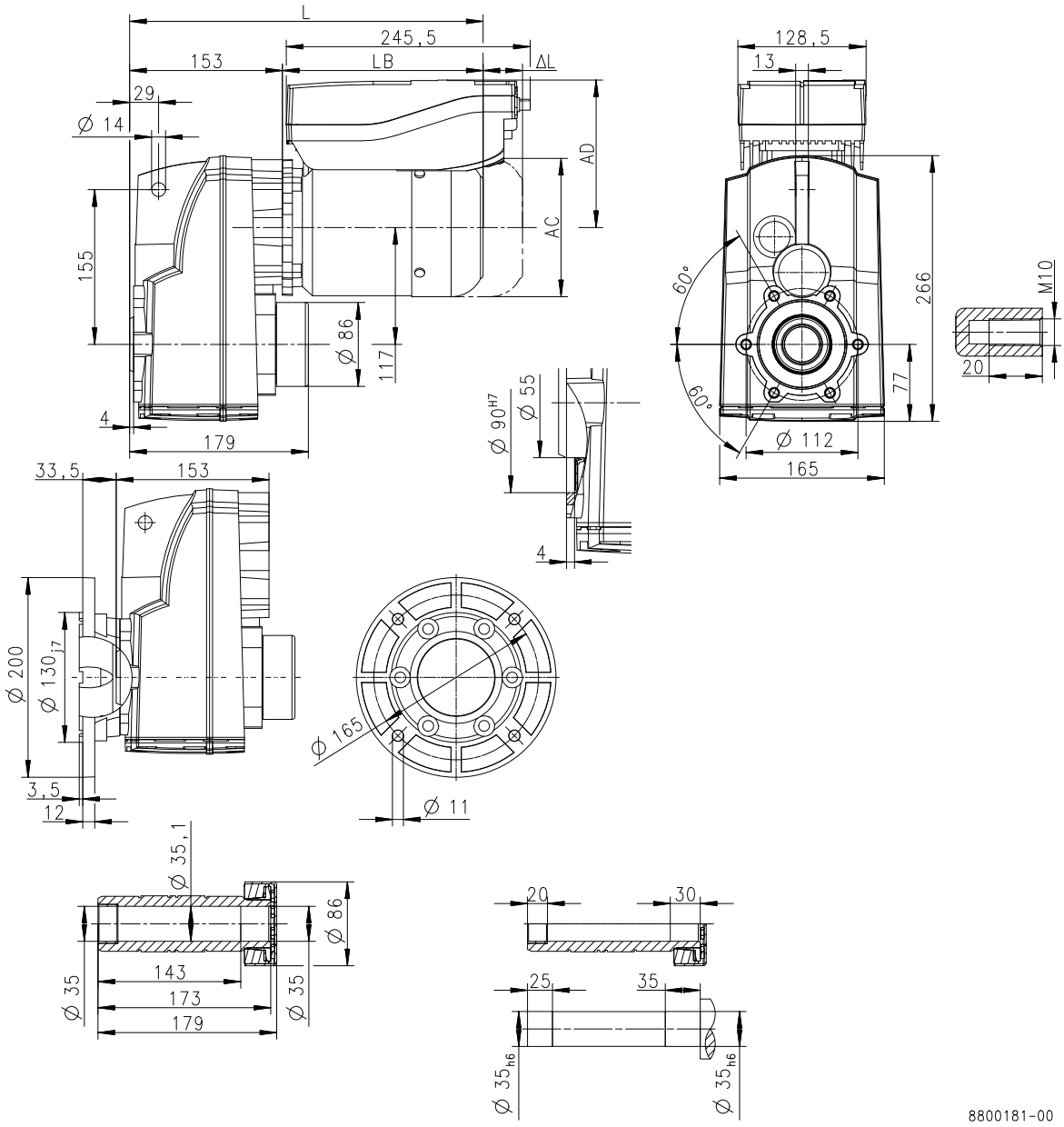

Product			MSEMA□□	
			063-42	080-32
Dimensions				
Total length	**L**	**[mm]**	340	379
Motor length	**LB**	**[mm]**	187	226
Length of motor options	**Δ L**	**[mm]**	40	73
Motor diameter	**AC**	**[mm]**	123	156
Distance motor/connection	**AD**	**[mm]**	140.5	158.5



Dimensions

g500-S660

Dimensions with hollow shaft

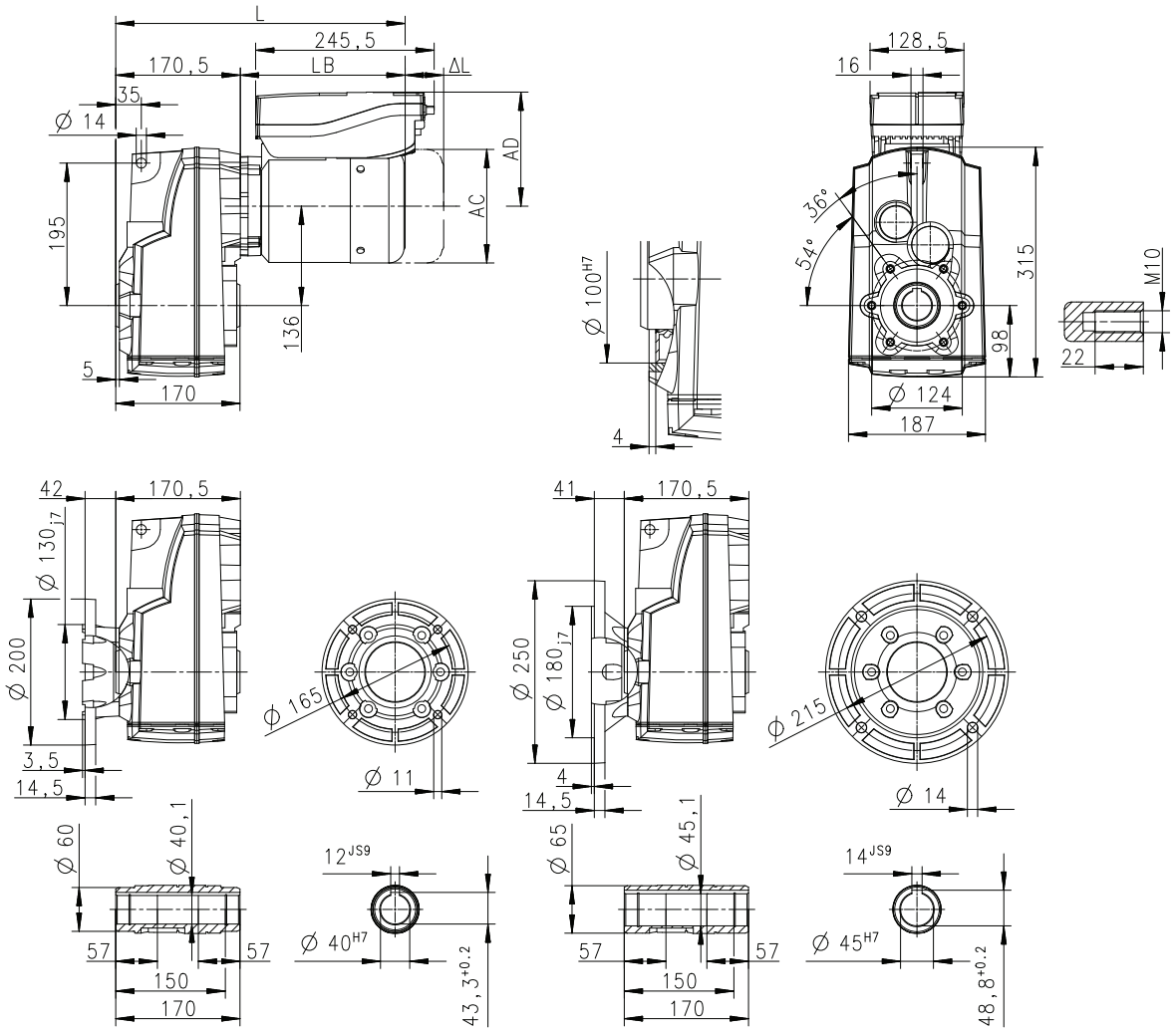

Product			MSEMA□□	
			063-42	080-32
Dimensions				
Total length	**L**	**[mm]**	358	397
Motor length	**LB**	**[mm]**	187	226
Length of motor options	**Δ L**	**[mm]**	40	73
Motor diameter	**AC**	**[mm]**	123	156
Distance motor/connection	**AD**	**[mm]**	140.5	158.5



Dimensions

g500-S660

Dimensions with solid shaft

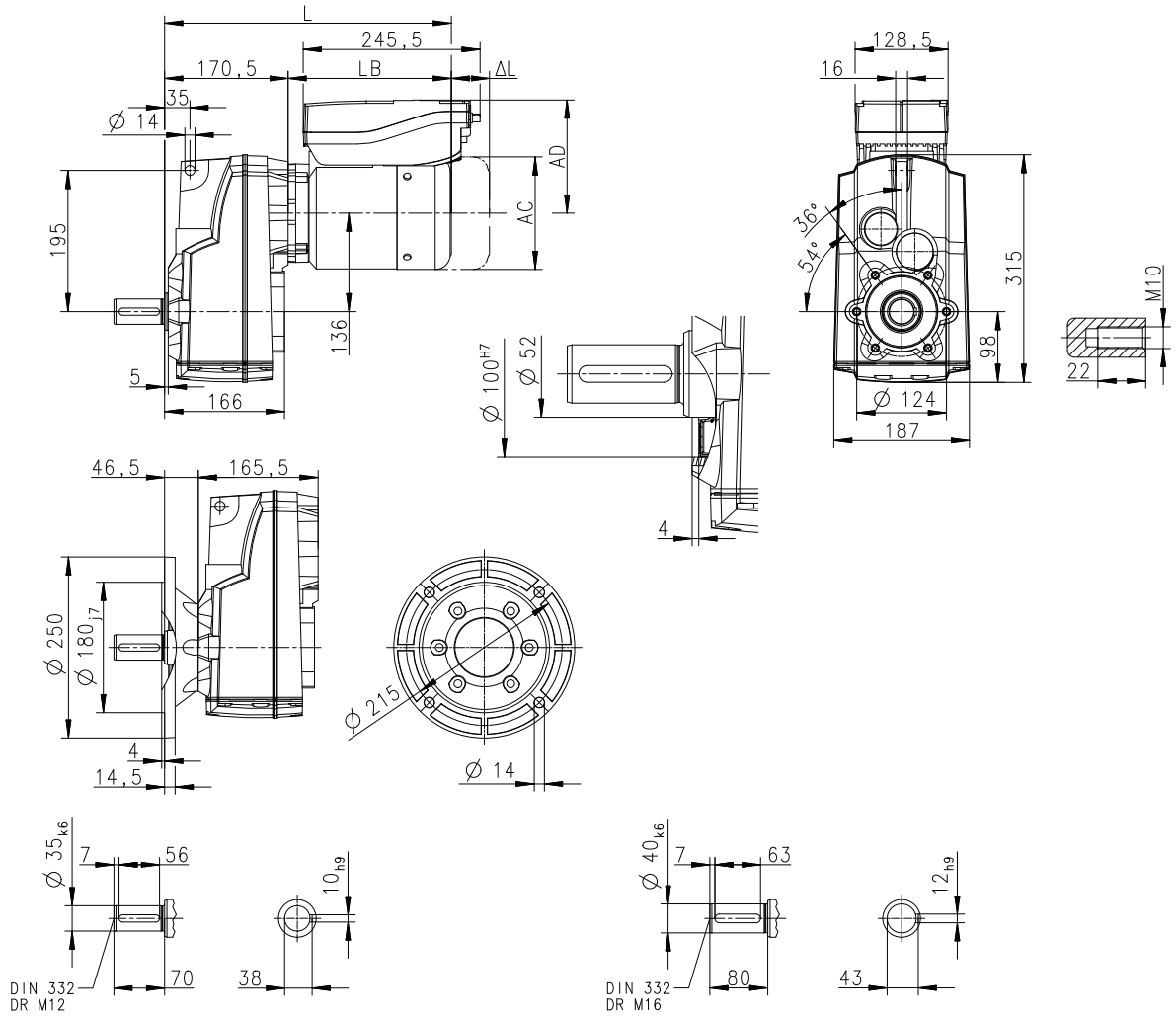

Product			MSEMA□□	
			063-42	080-32
Dimensions				
Total length	**L**	**[mm]**	358	397
Motor length	**LB**	**[mm]**	187	226
Length of motor options	**Δ L**	**[mm]**	40	73
Motor diameter	**AC**	**[mm]**	123	156
Distance motor/connection	**AD**	**[mm]**	140.5	158.5



Dimensions

g500-S660

Dimensions with solid shaft and foot

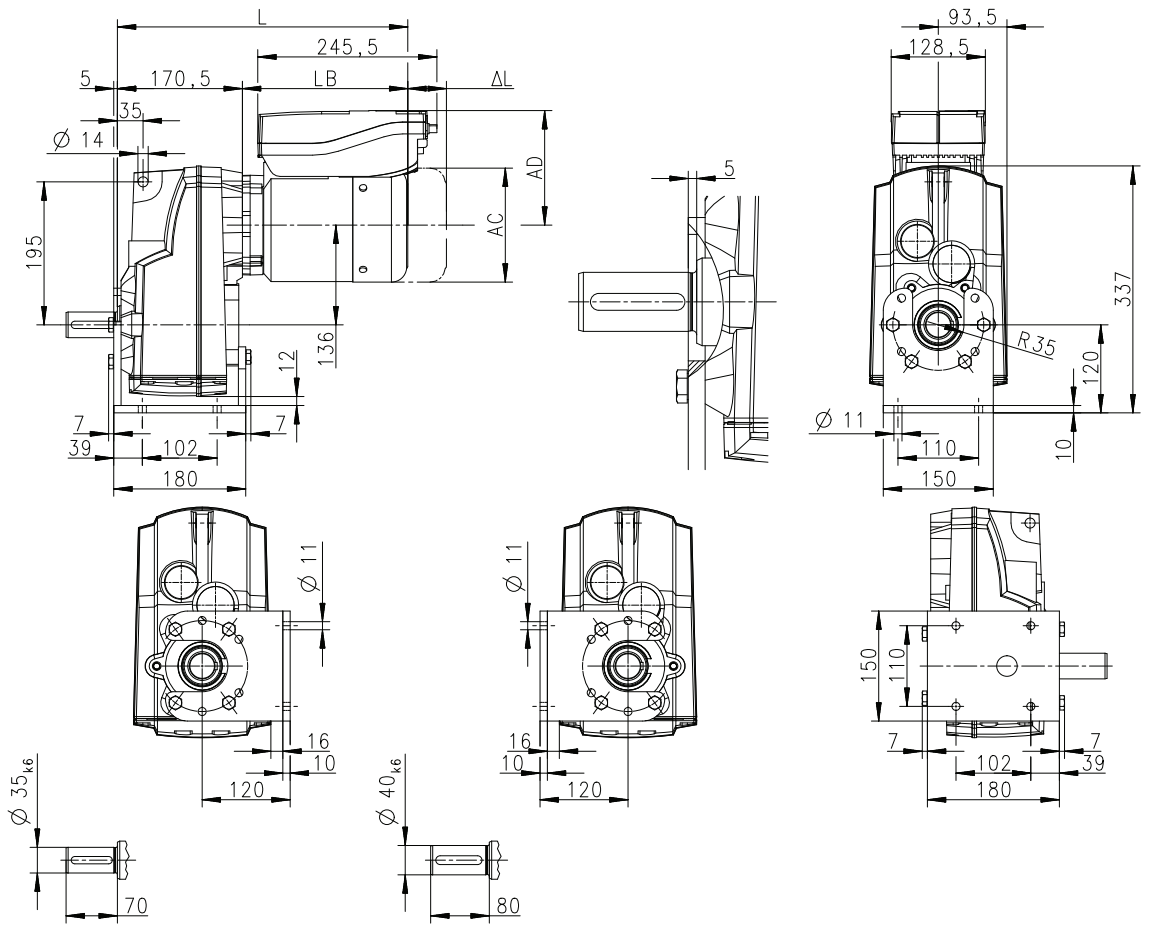

Product			MSEMA□□	
			063-42	080-32
Dimensions				
Total length	**L**	**[mm]**	358	397
Motor length	**LB**	**[mm]**	187	226
Length of motor options	**Δ L**	**[mm]**	40	73
Motor diameter	**AC**	**[mm]**	123	156
Distance motor/connection	**AD**	**[mm]**	140.5	158.5



Dimensions

g500-S660

Dimensions with shrink disc

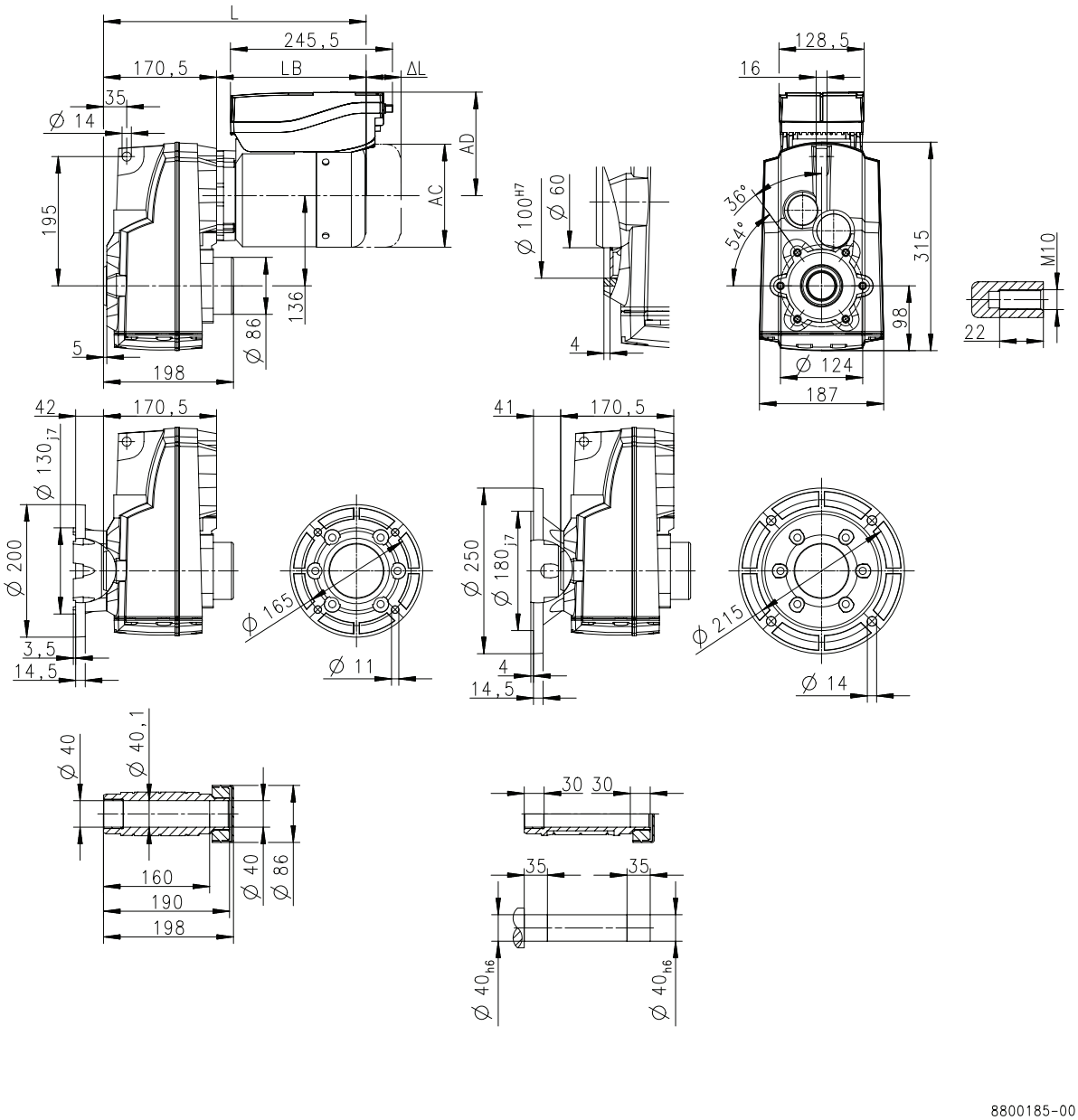

Product			MSEMA□□	
			063-42	080-32
Dimensions				
Total length	**L**	**[mm]**	358	397
Motor length	**LB**	**[mm]**	187	226
Length of motor options	**Δ L**	**[mm]**	40	73
Motor diameter	**AC**	**[mm]**	123	156
Distance motor/connection	**AD**	**[mm]**	140.5	158.5



Weights

2-stage gearboxes

				MSEMA□□	
				063-42	080-32
g500	-S130	m	[kg]	11	18
	-S220	m	[kg]	12	19
	-S400	m	[kg]	16	22
	-S660	m	[kg]	20	26

3-stage gearboxes

				MSEMA□□	
				063-42	080-32
g500	-S220	m	[kg]	13	19
	-S400	m	[kg]	16	22
	-S660	m	[kg]	20	27



Surface and corrosion protection

For optimum protection of geared motors against ambient conditions, the surface and corrosion protection system (OKS) offers tailor-made solutions.

Various surface coatings combined with other protective measures ensure that the geared motors operate reliably even at high air humidity, in outdoor installations or in the presence of atmospheric impurities. Any colour from the RAL Classic collection can be chosen for the top coat. The geared motors are also available unpainted (no surface and corrosion protection).

Surface and corrosion protection	Applications	Measures
OKS-G (primed)	• Dependent on subsequent top coat applied	• 2K PUR priming coat (grey) • Zinc-coated screws • Rust-free breather elements Optional measures • Stainless steel nameplate
-	• Standard applications • Internal installation in heated buildings • Air humidity up to 90%	• Surface coating as per corrosivity category C1 (in line with EN 12944-2) • Zinc-coated screws • Rust-free breather elements Optional measures • Stainless steel nameplate
OKS-M (medium)	• Internal installation in non-heated buildings • Covered, protected external installation • Air humidity up to 95%	• Surface coating as per corrosivity category C2 (in line with EN 12944-2) • Zinc-coated screws • Rust-free breather elements Optional measures • Stainless steel shaft • Stainless steel nameplate • Rust-free shrink disc (on request)
OKS-L (large)	• External installation • Air humidity above 95% • Chemical industry plants • Food industry	• Surface coating as per corrosivity category C3 (in line with EN 12944-2) - -



Surface and corrosion protection

Structure of surface coating

Surface and corrosion protection	Corrosivity category	Surface coating	Colour
	DIN EN ISO 12944-2	Structure	
Without OKS(uncoated)		Dipping primed gearbox	
OKS-G (primed)		Dipping primed gearbox 2K PUR priming coat	
-	C1	Dipping primed gearbox 2K-PUR top coat	Standard: RAL 7012 Optional: RAL Classic
OKS-M (medium)	C2	Dipping primed gearbox 2K PUR priming coat 2K-PUR top coat	
OKS-L (large)	C3		





g500-S shaft-mounted helical gearboxes

130 to 660 Nm

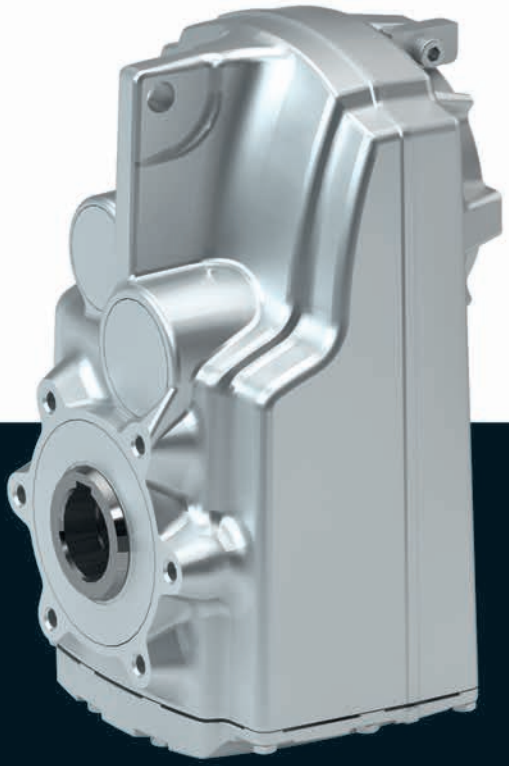

g500-S shaft-mounted helical gearbox

Contents



General information	List of abbreviations	6.4.1 - 5
	Product information	6.4.1 - 6
	Equipment	6.4.1 - 7
	The gearbox kit	6.4.1 - 8
	Functions and features	6.4.1 - 10
	Lubricants	6.4.1 - 11
	Ventilation	6.4.1 - 12
Technical data	Permissible radial and axial forces at output	6.4.1 - 15
	Moments of inertia	6.4.1 - 17
	Additional weights for gearboxes	6.4.1 - 19
Accessories	Torque plate	6.4.1 - 21
	Shaft cover	6.4.1 - 22

Contents





List of abbreviations

$F_{ax,max}$	[N]	Max. axial force
$F_{rad,max}$	[N]	Max. radial force
i		Ratio
J	[kgcm²]	Moment of inertia
m	[kg]	Mass

g500-S shaft-mounted helical gearbox

General information



Product information

The slim shaft-mounted helical gearboxes feature high reliable radial forces, closely stepped gear reductions and a low backlash. They are available in 2-pole and 3-pole design with a torque up to 660 Nm and a ratio of up to i= 495.

Versions

- Slimline design saves installation space of the machine
- Solid shaft, hollow shaft and shrink disc for direct integration into the machine
- High accuracy with axial output provide for the highest efficiency

The product name

Gearbox type	Product range		Design	Rated torque [Nm]	Product
Shaft-mounted helical gearbox	g500	-	S	130	g500-S130
				220	g500-S220
				400	g500-S400
				660	g500-S660



Equipment

Overview

The equipment includes all the options available as standard and all the built-on accessories of the product.

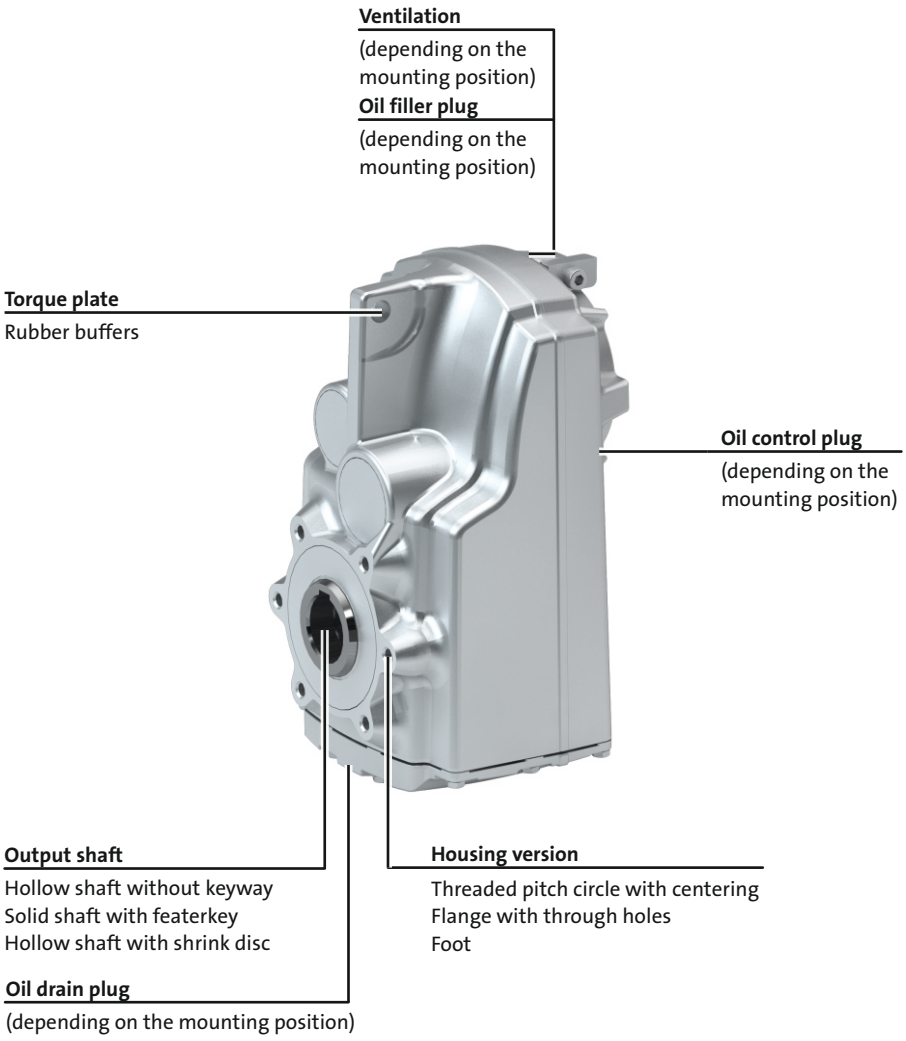



The gearbox kit

Gearbox details

Product	g500-S130	g500-S220	g500-S400	g500-S660
Driven shaft				
Solid shaft with featherkey [mm]	25x50		30x60	35x70 40x80
Hollow shaft with keyway [mm]	25	25/30	30/35	40/45
Hollow shaft with shrink disc [mm]	25	25/30	35	40
Design	Standard stainless steel			
Gasket	Standard FPM (Viton)			
Bearing	Standard			
Fitting grease	Not enclosed Enclosed			
Housing				
Housing version	With foot without centring With centering			
Output flange				
flange diameter [mm]	160		200	200/250 [1]
Lubricant				
Type	CLP 460 [2] CLP HC 320 CLP HC 220 CLP HC 220 USDA H1			
Oil-level inspection	Without inspection With inspection			
Breather element	Without		Standard mounting position: Mounted Combined mounting position: loosely enclosed	
Backlash				
Backlash	Standard			
Accessories				
Torque plate	Rubber buffers			
Shaft cover	Shrink disc: Rotating cover Shrink disc: Fixed cover			

[1] 200 mm flange diameter only possible on hollow shaft version.
[2] Not suitable for geared servo motors.

► Further information and installation feasibilities can be found in the Gearboxes chapter.



The gearbox kit

Gearbox details

Solid shaft

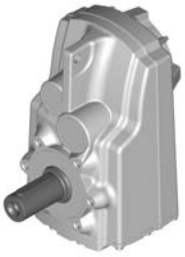
without centring

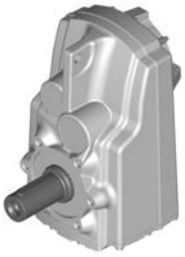
With centering


Flange with through holes

Hollow shaft


不带止口圆


止口圆对中


法兰带通孔

Hollow shaft with shrink disc


without centring


With centering


Flange with through holes

Accessories


Foot mounting


With rubber buffer

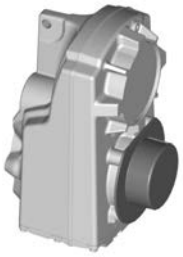
Shrink disc cover

6.4.1



Functions and features

Product	g500-S130	g500-S220	g500-S400	g500-S660
Housing				
Design	Cuboid			
Material	Aluminium			
Solid shaft				
Design	with keyway to DIN 6885			
Tolerance	Shaft diameter ≤ 50 mm: k6 Shaft diameter > 50 mm: m6			
Material	Tempered steel C45 Nirosta X46Cr13			
Hollow shaft				
Design	With keyway Without keyway (for shrink disc)			
Tolerance	Bore H7			
Material	Tempered steel C45 Nirosta X46Cr13			
Toothed parts				
Design	Ground tooth flanks Optimised tooth flank geometry			
Material	Case-hardened steel			
Shaft-hub joint				
	1st and 2nd step: Force-fit 3rd step: positive-fit			
Shaft sealing rings				
Design	With dust lip			
Material	NB / FP			
Bearing				
Design	Ball bearing / tapered-roller bearing depending on size and design			
Lubricants				
	Standard: mineral oil Optional: synthetic oil [1]			
Quantities	Corresponding to mounting position (see nameplate)			
Mechanical efficiency				
2-stage gearboxes [$\eta_{c=1}$]	0.96			
3-stage gearboxes [$\eta_{c=1}$]		0.95		

[1] Standard for geared servo motors.

Direction of rotation

2-stage gearboxes	3-stage gearboxes
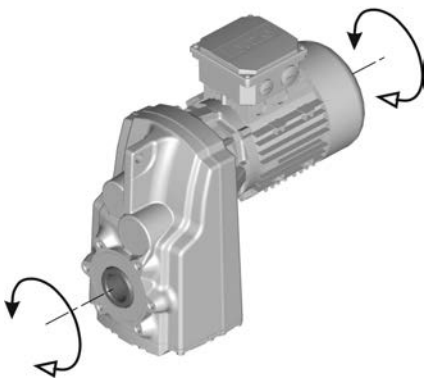	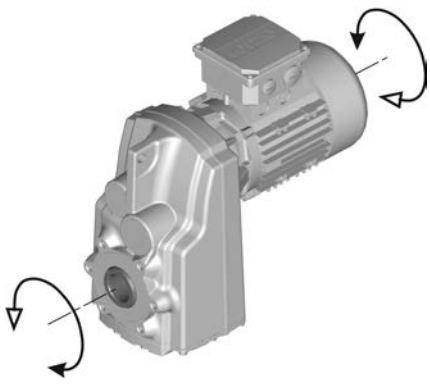

6.4.1



Lubricants

Lenze gearboxes and geared motors are ready for operation on delivery and are filled with lubricants specific to both the drive and the design. The mounting position and design specified in the order are key factors in choosing the volume of lubricant.

The lubricants listed in the lubricant table are approved for use in Lenze drives.

Lubricant table

Mode	CLP 460	CLP HC 320	CLP HC 220 USDA H1
Ambient temperature [°C]	0 ... +40	-25 ... +50	-20 ... +40
Specification	Mineral based oil with additives	Synthetic-based oil (synthetic hydrocarbon / poly-alpha-olefin oil)	
Changing interval	16000 operating hours not later than after three years (oil temperature 70 to 80 °C)	25000 operating hours not later than after three years (oil temperature 70 to 80 °C)	16000 operating hours not later than after three years (oil temperature 70 to 80 °C)
Fuchs	Fuchs Renolin CLP 460	Fuchs Renolin Unisyn CLP 320	bremer & leguil Cassida Fluid GL 220
Klüber	Klüberoil GEM1-460 N	Klübersynth GEM4-320 N	Klüberoil 4 UH1-220 N
Shell	Shell Omala S2 G 460	Shell Omala S4 GX HD 320	

► Please contact your Lenze sales office if you are operating at ambient temperatures in areas up to< -20 °C bzw. > or up to +40°C.

Shaft sealing rings

By default, the gearboxes come with NBR shaft sealing rings at the output end. At high speed and unfavourable ambient conditions as high temperature, reduced circulation of air etc., Lenze recommends the use of Viton shaft sealing rings.

Please consider this in your order.



Ventilation

Non-ventilated gearboxes

No ventilation is required for gearboxes g500-S130 to S220.

Ventilated gearboxes

The g500-S400 S660 gearbox is supplied with a breather element as standard.

Gearboxes in combined mounting position

To reduce the number of different versions, the gearboxes can also be ordered with combined mounting positions.
Depending on the gearbox in question, the following combinations are available:
g500-S130 to S660 in combined mounting position AEF
The breather elements are supplied loose.



Ventilation

Position of ventilation, sealing elements and oil level check

► **A ... F** mounting position

A	B
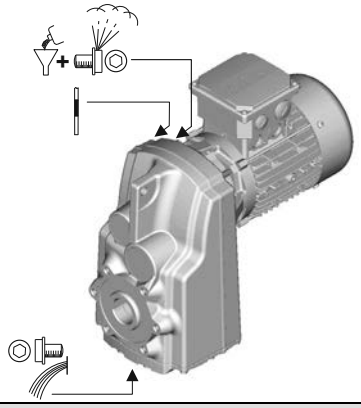	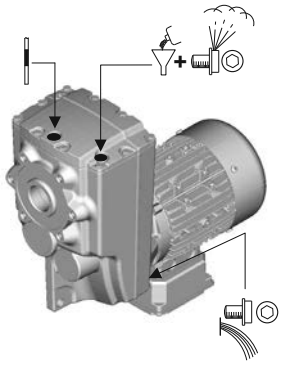
C	**D**
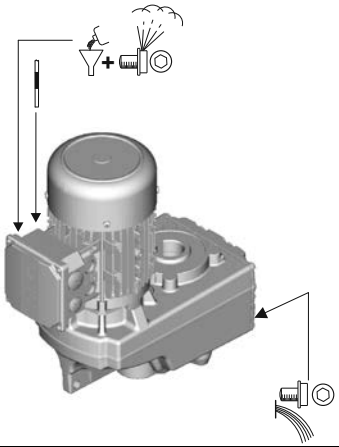	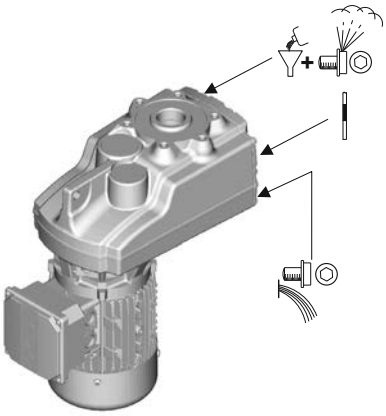
E	**F**
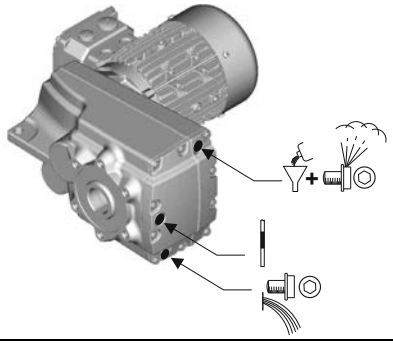	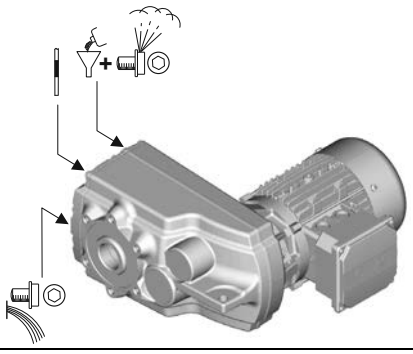

	Filling		Drain
	Ventilation		Check

6.4.1





Permissible radial and axial forces at output

Permissible radial force

$F_{rad,perm} = f_w \times F_{rad,max}$

► If F_{rad} **and** $F_{ax} \neq 0$, please contact Lenze.

Permissible axial force

If there is no radial force, the maximum permissible axial force is 50 % of the table value $F_{rad,max}$

Application of forces

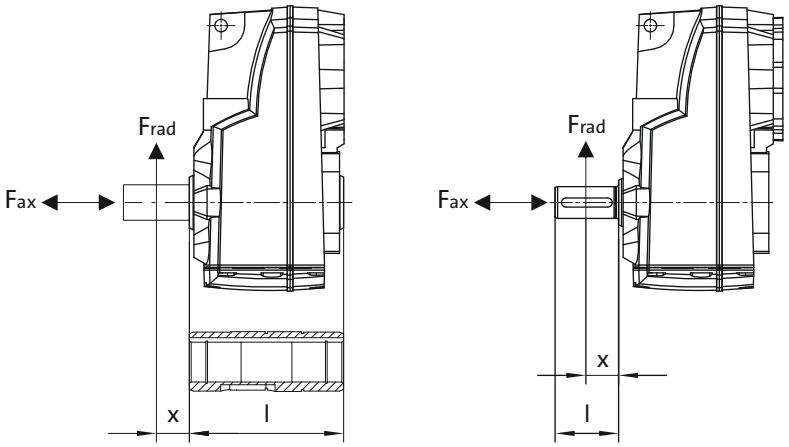

Additional load factor f_w at output shaft

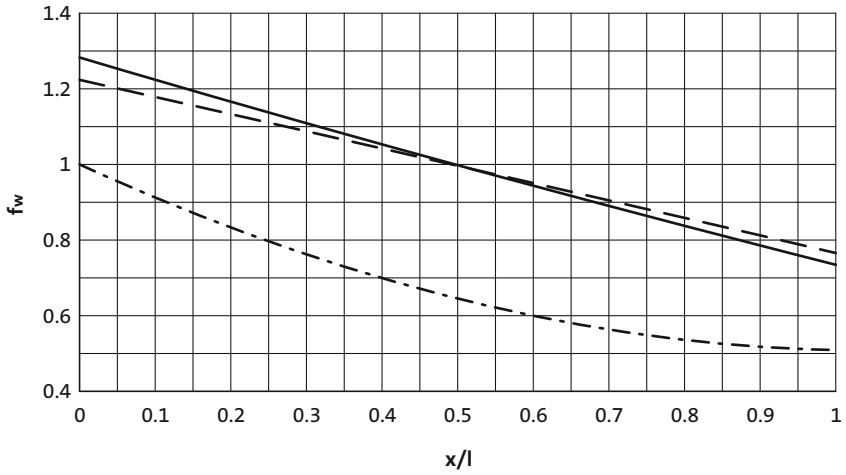

6.4.1

——— Solid shaft
— — — Solid shaft with flange
— · — Hollow shaft



Permissible radial and axial forces at output

The values given in the table refer to the center shaft end force application point and are minimum values calculated according to the most unfavourable conditions (force application angle, mounting position, direction of rotation). The values were calculated for the motor/gearbox combination with a load capacity of c= 1.3 and an input speed of 1400 rpm.

- If the torque is transmitted via the flange face, max 50 % of the radial force $F_{rad,max}$ are permissible.
- Neither radial nor axial forces are permissible for the hollow shaft with shrink disc.

In case of different operating conditions, considerably higher forces can be transmitted. Please contact Lenze.

Product	n_2 [r/min]									
	1000	630	400	250	160	100	63	40	25	≤16
	Max. radial force, Hollow shaft									
	$F_{rad,max}$	$F_{rad,max}$	$F_{rad,max}$	$F_{rad,max}$	$F_{rad,max}$	$F_{rad,max}$	$F_{rad,max}$	$F_{rad,max}$	$F_{rad,max}$	$F_{rad,max}$
	[N]	[N]	[N]	[N]	[N]	[N]	[N]	[N]	[N]	[N]
g500-S130	1000	1150	1350	1500	1650	2200	2750	3450	4200	4500
g500-S220	2100	2700	2800	3200	3800	4600	5500	6300	7000	7000
g500-S400	1800	2400	3000	3400	4100	5000	6000	7100	8000	8000
g500-S660	2400	3300	4300	4700	5000	6600	8500	10800	12000	12000
	Max. radial force, Solid shaft without flange									
	$F_{rad,max}$	$F_{rad,max}$	$F_{rad,max}$	$F_{rad,max}$	$F_{rad,max}$	$F_{rad,max}$	$F_{rad,max}$	$F_{rad,max}$	$F_{rad,max}$	$F_{rad,max}$
	[N]	[N]	[N]	[N]	[N]	[N]	[N]	[N]	[N]	[N]
g500-S130	1000	1150	1350	1500	1650	2200	2750	3450	4200	4500
g500-S220	1650	2100	2300	2700	3200	3600	3600	3600	3600	3600
g500-S400	1400	1900	2400	2700	3200	4000	4800	5800	6200	6200
g500-S660	1850	2500	3200	3600	3900	5100	6500	8400	9000	9000
	Max. radial force, Solid shaft with flange									
	$F_{rad,max}$	$F_{rad,max}$	$F_{rad,max}$	$F_{rad,max}$	$F_{rad,max}$	$F_{rad,max}$	$F_{rad,max}$	$F_{rad,max}$	$F_{rad,max}$	$F_{rad,max}$
	[N]	[N]	[N]	[N]	[N]	[N]	[N]	[N]	[N]	[N]
g500-S130	1000	1150	1350	1500	1650	2200	2750	3450	4200	4500
g500-S220	2300	2800	3200	3700	4400	4600	4600	4600	4600	4600
g500-S400	2900	3700	4300	5100	5900	6800	7000	7000	7000	7000
g500-S660	4000	5000	6100	7000	7800	9600	10000	10000	10000	10000



Moments of inertia

- The moments of inertia relate to the drive shaft of the gearbox.
- The total moment of inertia is calculated by adding the values of the gearbox, motor and accessories.

2-stage gearboxes

Product	Ratio	Moment of inertia
	i	J
		[kgcm²]
g500-S130	3.661	1.56
	5.021	0.89
	6.425	0.57
	7.029	0.49
	8.322	0.69
	9.411	1.03
	11.413	0.42
	12.907	0.60
	14.606	0.29
	15.979	0.25
	18.069	0.34
	20.381	0.17
	23.048	0.23
	24.967	0.13
	28.233	0.17
	31.387	0.087
	35.493	0.11
	40.422	0.059
	45.711	0.074
	51.230	0.039
	57.933	0.048
	64.200	0.027
	72.600	0.032
	84.581	0.016
	95.648	0.019
g500-S220	3.840	2.60
	5.267	1.54
	6.767	1.64
	7.667	1.50
	9.280	1.04
	10.514	0.96
	11.876	0.72
	12.992	0.62
	13.456	0.67
	14.720	0.58
	16.571	0.44
	18.776	0.42
	20.300	0.34
	23.000	0.32
	26.422	0.21
	29.937	0.20
	32.867	0.15
	37.238	0.14
	42.533	0.095
	48.190	0.091
	51.620	0.069
	58.486	0.067
	65.975	0.044
	74.750	0.043

Product	Ratio	Moment of inertia
	i	J
		[kgcm²]
g500-S400	3.339	5.16
	4.579	2.91
	5.860	1.86
	6.411	1.58
	7.467	2.18
	8.436	1.95
	10.240	1.32
	11.569	1.20
	13.105	0.89
	14.336	0.77
	14.806	0.82
	16.197	0.70
	18.286	0.53
	20.659	0.49
	22.400	0.40
	25.308	0.37
	29.156	0.24
	32.940	0.23
	36.267	0.17
	40.974	0.16
	46.933	0.11
	53.026	0.10
	56.960	0.079
	64.354	0.074
g500-S660	3.920	8.80
	5.376	5.26
	6.417	5.48
	6.880	3.48
	7.311	4.90
	8.800	3.50
	10.027	3.19
	11.262	2.41
	12.320	2.12
	12.832	2.22
	14.037	1.96
	15.714	1.51
	17.905	1.42
	19.250	1.15
	21.933	1.09
	25.056	0.65
	28.548	0.61
	31.167	0.47
	35.511	0.44
	40.333	0.29
	45.956	0.28
	48.950	0.21
	55.773	0.20



Moments of inertia

3-stage gearboxes

Product	Ratio	Moment of inertia
	i	J
		[kgcm²]
g500-S220	40.012	0.20
	45.333	0.20
	52.587	0.13
	59.581	0.13
	67.298	0.092
	76.249	0.091
	86.079	0.062
	97.528	0.061
	111.747	0.044
	126.610	0.043
	143.205	0.030
	162.252	0.030
	241.022	0.014
	273.079	0.014
	312.233	0.003
	353.762	0.003
	398.508	0.006
	451.512	0.006
g500-S400	58.027	0.14
	65.559	0.14
	74.260	0.098
	83.900	0.095
	94.984	0.066
	107.314	0.064
	123.307	0.046
	139.313	0.045
	158.019	0.032
	178.531	0.031
	204.412	0.021
	230.946	0.021
	265.956	0.014
	300.479	0.014
	344.533	0.004
	389.256	0.004
	439.733	0.006
	496.814	0.006

Product	Ratio	Moment of inertia
	i	J
		[kgcm²]
g500-S660	49.867	0.39
	56.818	0.38
	63.817	0.27
	69.813	0.23
	72.713	0.26
	79.545	0.23
	89.048	0.17
	101.460	0.16
	109.083	0.13
	124.289	0.12
	137.133	0.083
	156.249	0.082
	176.611	0.056
	201.230	0.056
	223.833	0.037
	255.034	0.037
	280.500	0.026
	319.600	0.025
	369.548	0.016
	421.060	0.015



Additional weights for gearboxes

Product			g500-S130	g500-S220	g500-S400	g500-S660
Mass						
Solid shaft	m	[kg]	0.5	0.5	1.7	2.5
Shrink disc	m	[kg]	0.2	0.4	0.6	0.6
Foot	m	[kg]	1.7	1.8	3.3	4.3
Flange	m	[kg]	0.4	0.4	0.9	1.7





Torque plate

The torque is usually supported via the foot or the flange.
Another simple option is the integrated torque plate at the housing. Here, the torque is supported only via one point and is, among other things, suitable for shaft-mounted gearboxes. Moreover, the suitable rubber buffers provide for a low-tension installation and absorb slight shocks.

The rubber buffers can be ordered optionally.

Rubber buffer for torque plate

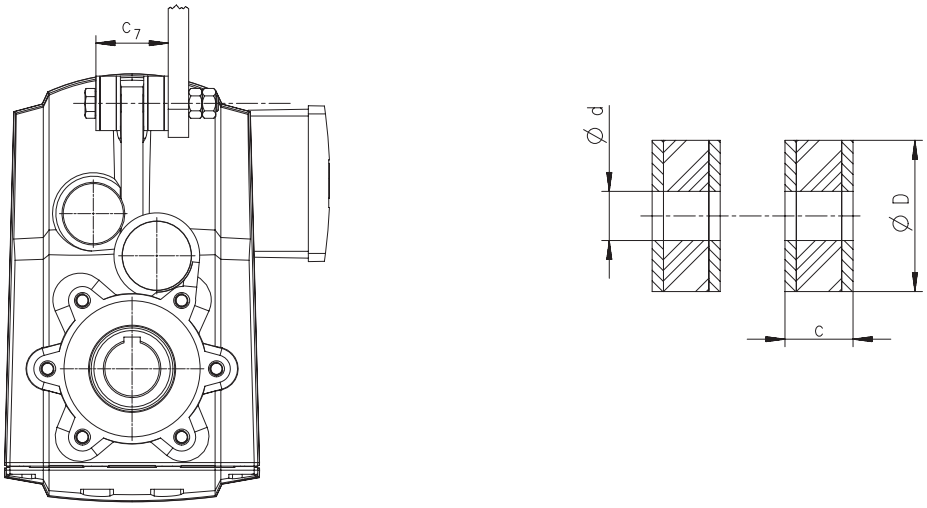

Product	Dimensions				Mass
	d	D	c	c_7	m
	[mm]	[mm]	[mm]	[mm]	[kg]
g500-S130	11.0	30.0	17.0	45.0	0.050
g500-S220	11.0	30.0	17.0	45.0	0.050
g500-S400	13.0	40.0	18.0	49.0	0.10
g500-S660	13.0	40.0	18.0	52.0	0.10



Shaft cover

Shrink disc cover

The cover is provided for the shrink disc to be protected from contact.

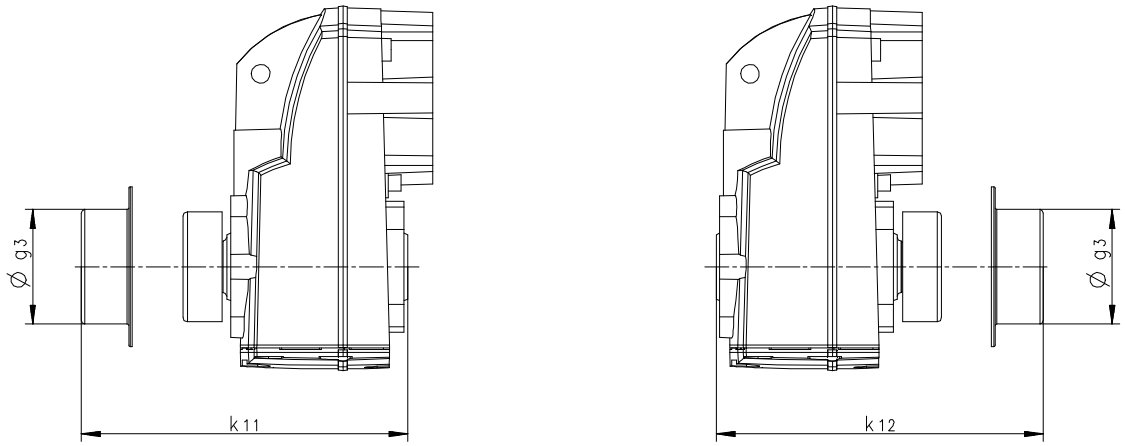

Product	Dimensions			Mass
	g_3	k_{11}	k_{12}	m
	[mm]	[mm]	[mm]	[kg]
g500-S130	63.0	132	132	0.050
g500-S220	76.0	152	152	0.050
g500-S400	90.0	182	182	0.050
g500-S660	90.0	200	202	0.050





g500-B bevel geared motors

9 to 425 Nm

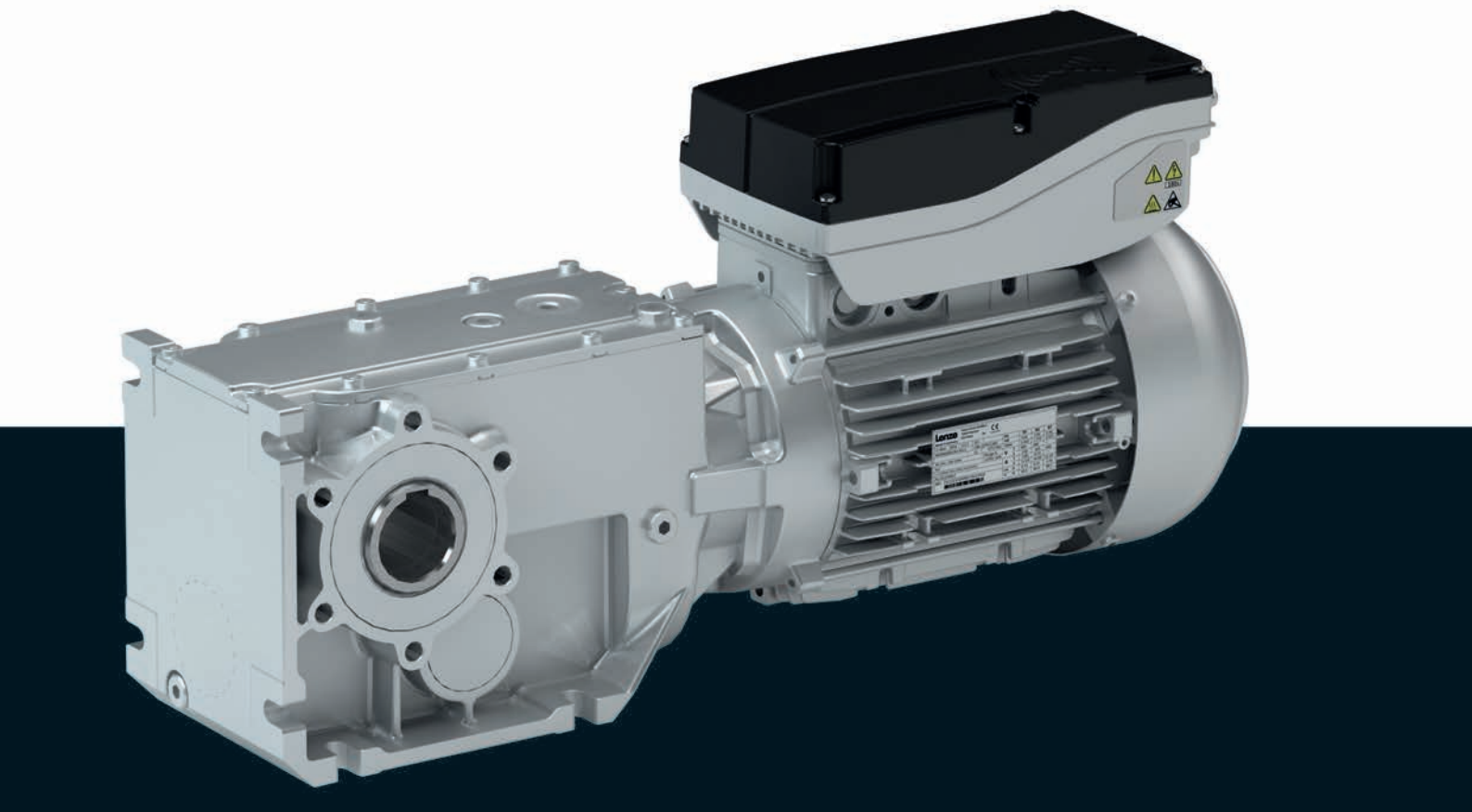

g500-B bevel geared motors

Contents



General information	List of abbreviations	6.5 - 5
	Product information	6.5 - 6
	Equipment	6.5 - 7
	The gearbox kit	6.5 - 8
	Dimensioning	6.5 - 14
Technical data	Selection tables, notes	6.5 - 17
	Selection tables	6.5 - 18
	Dimensions, notes	6.5 - 22
	Dimensions	6.5 - 23
	Weights	6.5 - 35
	Surface and corrosion protection	6.5 - 36

g500-B bevel geared motors

Contents





List of abbreviations

c		Load capacity
i		Ratio
m	[kg]	Mass
M_2	[Nm]	Output torque
M_{22}	[Nm]	Output torque
$M_{a_,1}$	[Nm]	Starting torque
$M_{a_,2}$	[Nm]	Starting torque
n_2	[r/min]	Output speed
n_{21}	[r/min]	Output speed
n_{22}	[r/min]	Output speed

CCC	China Compulsory Certificate
CE	Communauté Européenne
CSA	Canadian Standards Association
cURus	Combined certification marks of UL for the USA and Canada
DIN	Deutsches Institut für Normung e.V.
EMC	Electromagnetic compatibility
EN	European standard
GOST	Certificate for Russian Federation
IEC	International Electrotechnical Commission
IM	International Mounting Code
IP	International Protection Code
NEMA	National Electrical Manufacturers Association
UL	Underwriters Laboratory Listed Product
UR	Underwriters Laboratory Recognized Product
VDE	Verband deutscher Elektrotechniker (Association of German Electrical Engineers)



Product information

In combination with three-phase AC motors, our bevel gearboxes form a compact and powerful drive unit. Numerous options at the input and output end provide for the drive to be exactly adapted to your application.

The efficient bevel gearboxes feature high reliable radial forces, closely stepped gear reductions and a low backlash. They are available in 2-pole and 3-pole design with a torque up to 450 Nm and a ratio of up to i= 360.

Versions

- High-efficient right-angle gearbox in a compact design for space-saving installation
- Standardised shaft and flange dimensions for an easy machine integration
- Low backlash and high torsional stiffness provide for exact results in positioning applications
- With m300 Lenze Smart Motor, rated torque 1.75 Nm and 5 Nm

The product name

Gearbox type	Product range		Design	Rated torque [Nm]	Product
Bevel gearbox	g500	-	B	45	g500-B45
				110	g500-B110
				240	g500-B240
				450	g500-B450



Equipment

Overview

The equipment includes all the options available as standard and all the built-on accessories of the product.

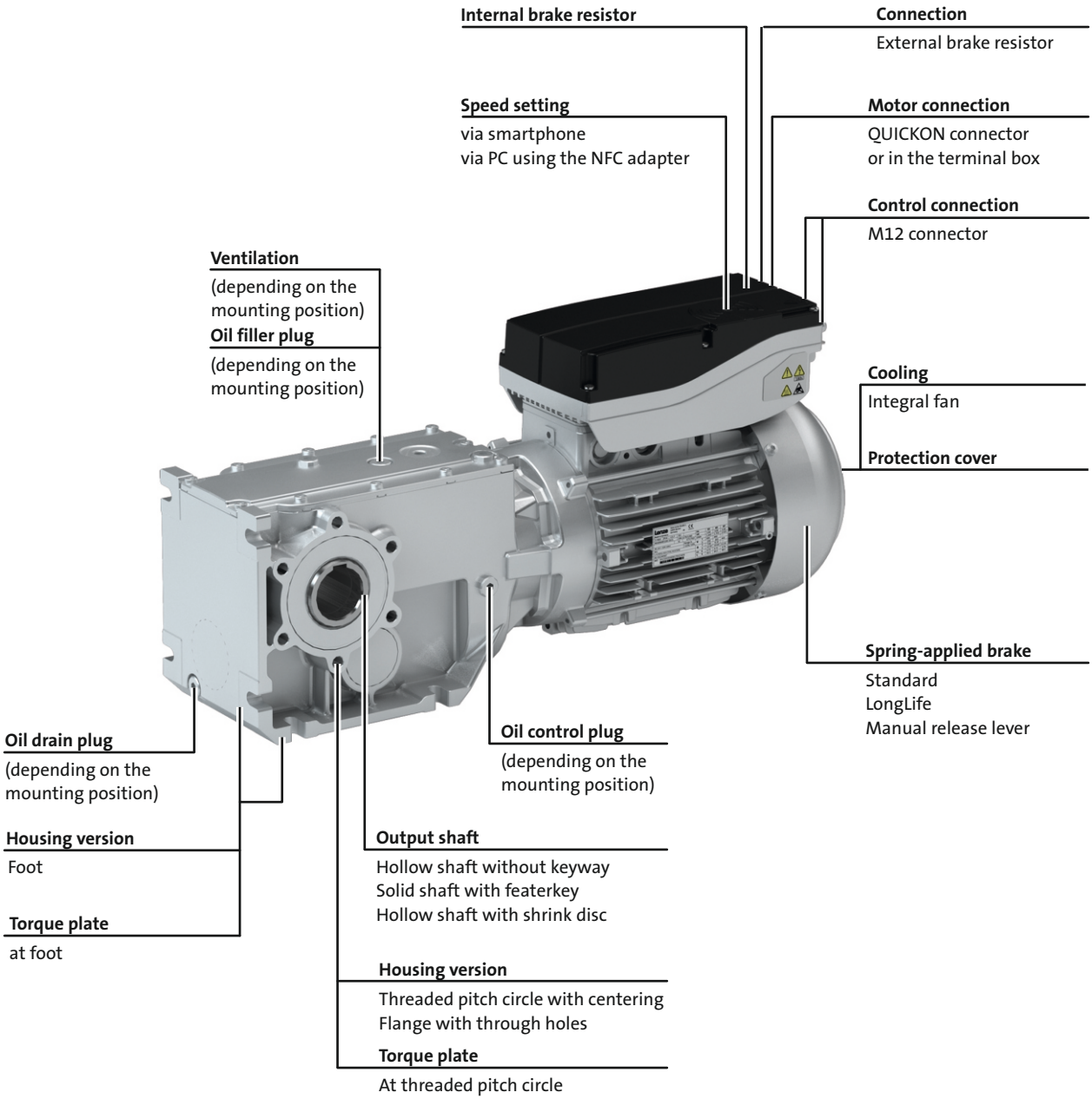



The gearbox kit

Geared motor

Product	g500-B45	g500-B110	g500-B240	g500-B450
Motor type	MSEMA AC motor			
Motor				
1.75 Nm	063			
5.0 Nm		080		
Technical data				
Starting torque $M_{a,1}$	See selection table			
Starting torque $M_{a,2}$	See selection table			
Output torque	See selection table			
Mains voltage	400 V ... 480 V			
Mains frequency	50 Hz ... 60 Hz			
Ratio	See selection table			
Mounting position				
Standard	A/B/C/D/E/F			
Combined	ABCDEF	AEF		
Colour	Not coated Primed Paint in various corrosion-protection designs in accordance with RAL colours			
Surface and corrosion protection	Without OKS(uncoated) OKS-G (primed) - OKS-M (medium) OKS-L (large)			

Motor parameter setting

Motor parameter	
Output speed n_{min}	See selection table
Output speed n_{max}	See selection table
Output speed 1	Between n_{min} and n_{max}
Direction of rotation	Clockwise/Counterclockwise
Output speed 2	Between n_{min} and n_{max}
Direction of rotation	Clockwise/Counterclockwise
Output speed 3	Between n_{min} and n_{max}
Direction of rotation	Clockwise/Counterclockwise
Output speed 4	Between n_{min} and n_{max}
Direction of rotation	Clockwise/Counterclockwise
Output speed 5	Between n_{min} and n_{max}
Direction of rotation	Clockwise/Counterclockwise
Acceleration time	0.1 to 20 s
Deceleration time	0.1 to 20 s
Energy saving mode	On/Off



The gearbox kit

Mounting positions

► Mounting position (A to F) and position of system blocks (1 to 6)

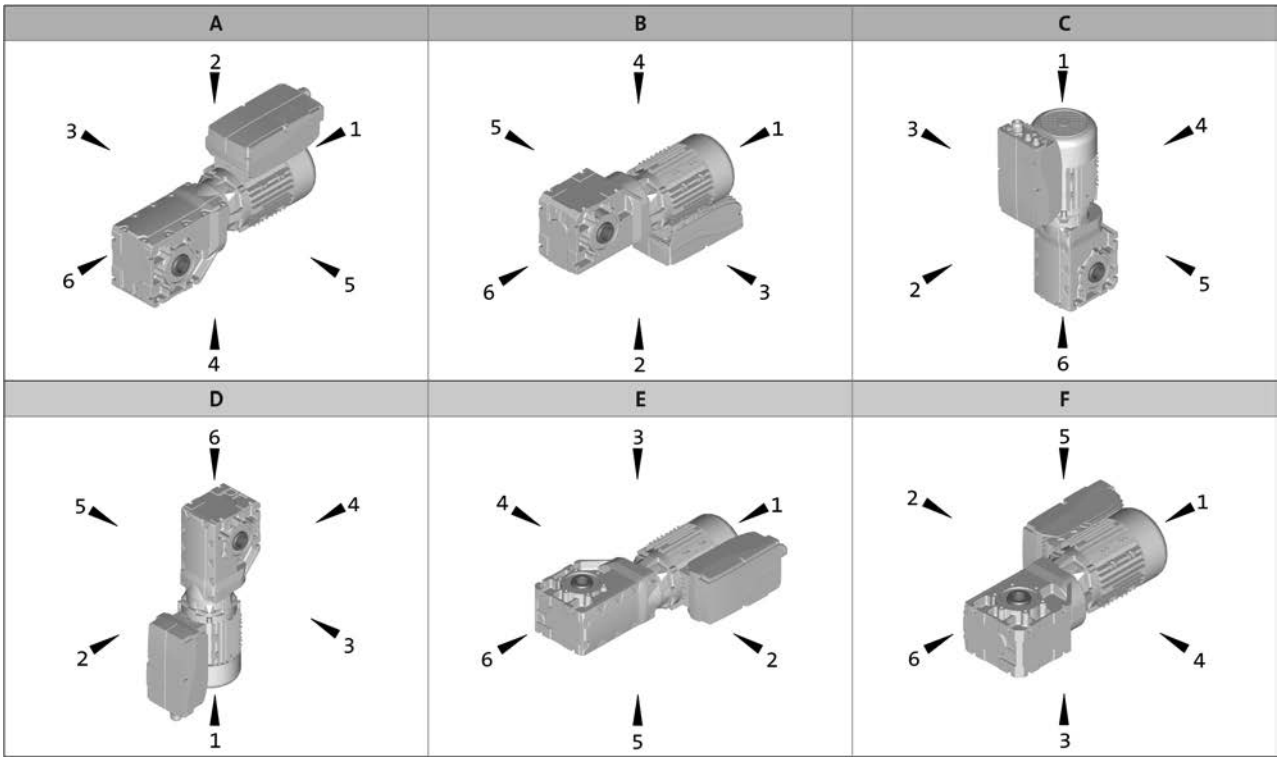

Hollow shaft: 0
Solid shaft: 3, 5, 8 (3+5)
Hollow shaft with shrink disc: 3, 5

Without flange: 0
Flange: 3, 5, 8 (3+5)
Terminal box: 2, 3, 4, 5



The gearbox kit

Motor details

Product	MSEMA□□	
	063-42	080-32
Enclosure	IP55	
Connection type	Terminal box QUICKON-connector	
Spring-applied brake		
Rated torque [Nm]	4	8
Brake design	Standard LongLife	
Options	Manual release lever	
Cooling	Integral fan	
Further options	Brake resistor	

► Further information and installation feasibilities can be found in the Motors chapter.



The gearbox kit

Motor details

Connection type
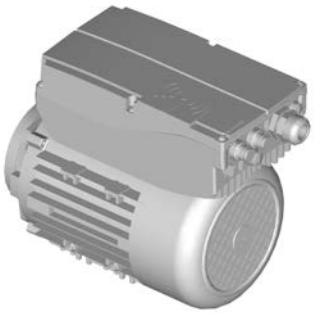 Terminal box 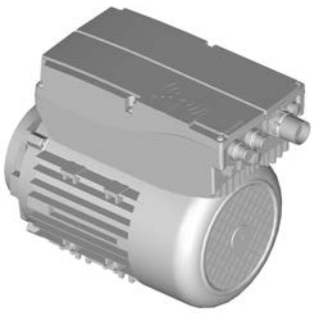 QUICKON-connector

Cooling: integral fan
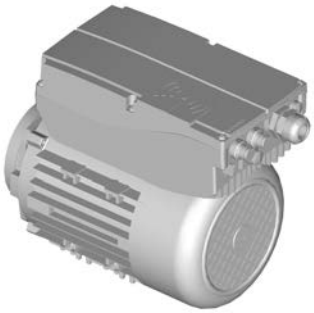 Without built-on accessories  With spring-applied brake With or without manual release lever

Further options
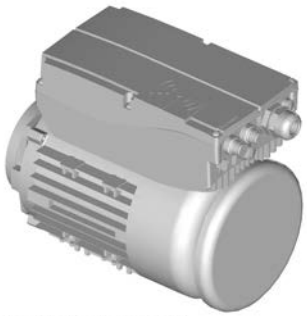 With protection cover



The gearbox kit

Gearbox details

Product	g500-B45	g500-B110	g500-B240	g500-B450
Driven shaft				
Solid shaft without keyway [mm]				
Solid shaft with featherkey [mm]	20x40		30x60	
Hollow shaft with keyway [mm]	18/20	20/25	30/35	35/40
Hollow shaft with shrink disc [mm]	20		30/35	35
Design	Standard stainless steel			
Gasket	Standard FPM (Viton)			
Bearing	Standard			
Fitting grease	Not enclosed Enclosed			
Housing				
Housing version	With foot With foot and centering			
Output flange				
flange diameter [mm]	110/120	120/160	160/200	200
Lubricant				
Type	CLP 460 [1)] CLP HC 320 CLP HC 220 CLP HC 220 USDA H1			
Oil-level inspection	Without inspection			Without inspection With inspection
Breather element	Without			Standard mounting position: Mounted Combined mounting position: loosely enclosed
Backlash				
Backlash	Standard			
Accessories				
Torque plate	Rubber buffers At threaded pitch circle	At threaded pitch circle	At threaded pitch circle At foot	At foot
Shaft cover	Hollow shaft Shrink disc: Rotating cover Shrink disc: Fixed cover			

[1)] Not suitable for geared servo motors.

► Further information and installation feasibilities can be found in the Gearboxes chapter.



The gearbox kit

Gearbox details

Solid shaft



Foot mounting
without centring



Foot mounting
With centering



Flange with through holes

Hollow shaft



Foot mounting
without centring



Foot mounting
With centering



Flange with through holes

Hollow shaft with shrink disc



Foot mounting
without centring



Foot mounting
With centering

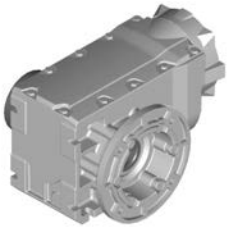

Flange with through holes

Accessories



2nd output shaft end



Torque plate
at foot



Torque plate
at threaded pitch circle

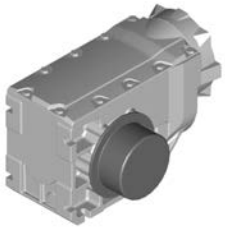

Cover
Hollow shaft/shrink disc

6.5



Dimensioning

General information about the data provided in this catalogue

The powers, torques and speeds specified in this catalogue are rounded values and are valid under the following conditions:

- Operating time/day = 8 h (100% OT)
- Duty class I for up to 10 switching operations/h
- Mounting positions and designs in this catalogue
- Standard lubricant
- T_{amb} = 20 °C for gearboxes,
  T_{amb} = 40 °C for motors (in accordance with EN 60034)
- Site altitude < = 1000 m amsl
- The selection tables provide the permissible mechanical powers and torques.
- The rated power specified for motors and geared motors applies to operating mode S1 (in accordance with EN 60034).

Under different operating conditions, the values obtained may vary from those listed here.
In the case of extreme operating conditions, please consult your Lenze sales office.



Dimensioning

Weights

The values given in the tables consider the following gearbox/motor combination:
- Gearbox with hollow shaft without flange including lubricant amount for mounting position A
- Motor without built-on accessories (with integral fan)

For versions deviating from this, additional weights have to be considered.

The respective values can be found for:
- Geared motors without built-on accessories
  > Chapter: Geared motors/Technical data
- Gearbox options
  > Chapter: Gearboxes/Technical data and accessories
- Motor options: Spring-applied brake, feedback, 2. Shaft end, handwheel and increased centrifugal mass
  > Chapter: Motors/Accessories

Moments of inertia

The given moments of inertia of the gearbox refer to the drive shaft. The influence of the ratio (i^2) has been considered in the data.

When the total moment of inertia of the geared motor is calculated, the values of the gearbox, motor and accessories have to be added.

The respective values can be found for:
- Gearboxes
  > Chapter: Gearbox/Technical data
- Motors without built-on accessories
  > Chapter: Motors/Technical data/Rated data
- Motor options: Spring-applied brake, feedback, 2. Shaft end, handwheel and increased centrifugal mass
  > Chapter: Motors/Accessories





Selection tables, notes

Notes on the selection tables with 4-pole motors

The selection tables show the available combinations of gearbox type, number of stages, ratio and motor. They are used only to provide basic orientation.
The following legend indicates the structure of the selection tables.

Max. torque M_{max} of the drive motor

M_{max} = 7.0 Nm

2-stage gearbox ← **Number of the gear stage of the gearbox**

Mains operation							Product		
Min. output speed		Max. output speed		Starting torque		i			
n_{21} [r/min]	M_2 [Nm]	n_2 [r/min]	M_2 [Nm]	$M_{a,1}$ [Nm]	$M_{a,2}$ [Nm]		g500	MSEMA□□	
93	9.0	481	9.0	36	49	5.411	-B45	063-42	21
80	10	418	10	41	51	6.222	-B45	063-42	21
70	12	366	12	43	54	7.111	-B45	063-42	21
61	14	318	14	44	55	8.178	-B45	063-42	21

n_{21} is the minimum speed where the torque **M_2** is permissible.

n_2 is the maximum speed where the torque **M_2** is permissible.

Maximally permissible starting torque which is available for up to 500,000 switching cycles

Maximally permissible starting torque which is available for up to 20 million switching cycles

Ratio i

Product Gearbox

Product Motor

Page number for dimensions

Torque diagram

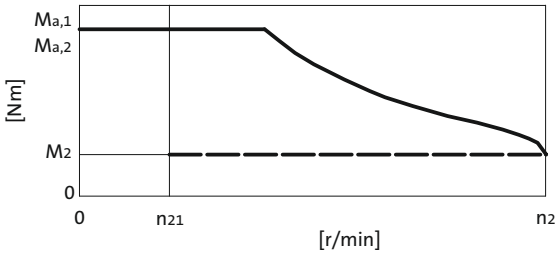



Selection tables

M_{max} = 7.0 Nm

2-stage gearboxes

Mains operation						i	Product		
Min. output speed		Max. output speed		Starting torque					
n_{21} [r/min]	M_2 [Nm]	n_2 [r/min]	M_2 [Nm]	$M_{a,1}$ [Nm]	$M_{a,2}$ [Nm]		g500	MSEMA□□	
93	9.0	481	9.0	36	36	5.411	-B45	063-42	23
80	10	418	10	41	41	6.222	-B45	063-42	23
70	12	366	12	43	47	7.111	-B45	063-42	23
61	14	318	14	44	54	8.178	-B45	063-42	23
55	15	286	15	45	56	9.101	-B45	063-42	23
48	17	248	17	45	56	10.466	-B45	063-42	23
43	19	223	19	45	56	11.640	-B45	063-42	23
39	21	205	21	84	84	12.698	-B110	063-42	26
37	22	194	22	45	56	13.386	-B45	063-42	23
34	24	178	24	90	97	14.603	-B110	063-42	26
33	25	172	25	45	56	15.111	-B45	063-42	23
32	26	167	26	92	103	15.556	-B110	063-42	26
29	29	150	29	45	56	17.378	-B45	063-42	23
28	30	145	30	96	119	17.889	-B110	063-42	26
26	32	134	32	45	56	19.365	-B45	063-42	23
26	33	133	33	100	125	19.556	-B110	063-42	26
23	37	117	37	45	56	22.270	-B45	063-42	23
22	37	116	37	104	130	22.489	-B110	063-42	26
20	42	104	42	45	50	25.051	-B45	063-42	23
20	42	103	42	108	119	25.185	-B110	063-42	26
17	48	90	48	45	50	28.808	-B45	063-42	23
17	48	90	48	110	121	28.963	-B110	063-42	26
16	53	81	53	108	119	31.919	-B110	063-42	26
15	56	78	56	202	222	33.433	-B240	063-42	29
14	61	71	61	110	121	36.707	-B110	063-42	26
13	62	70	62	106	133	37.400	-B110	063-42	26
13	63	68	63	229	252	37.967	-B240	063-42	29
13	67	65	67	80	88	40.000	-B110	063-42	26
12	72	60	72	234	258	43.267	-B240	063-42	29
11	76	57	76	92	101	46.000	-B110	063-42	26
10	80	54	80	110	121	48.167	-B110	063-42	26
10	82	53	82	240	264	49.133	-B240	063-42	29
9.6	87	50	87	233	256	52.510	-B240	063-42	29
8.4	99	44	99	240	264	59.630	-B240	063-42	29
8.2	101	43	101	110	121	61.045	-B110	063-42	26



Selection tables

M_{max} = 7.0 Nm

2-stage gearboxes

Mains operation						i	Product		
Min. output speed		Max. output speed		Starting torque					
n_{21} [r/min]	M_2 [Nm]	n_2 [r/min]	M_2 [Nm]	$M_{a,1}$ [Nm]	$M_{a,2}$ [Nm]		g500	MSEMA□□	
7.5	112	39	112	151	167	67.113	-B240	063-42	29
6.6	127	34	127	172	189	76.213	-B240	063-42	29
6.6	127	34	127	110	121	76.500	-B110	063-42	26

3-stage gearboxes

Mains operation						i	Product		
Min. output speed		Max. output speed		Starting torque					
n_{21} [r/min]	M_2 [Nm]	n_2 [r/min]	M_2 [Nm]	$M_{a,1}$ [Nm]	$M_{a,2}$ [Nm]		g500	MSEMA□□	
7.4	111	38	111	240	300	68.459	-B240	063-42	29
6.5	126	33	126	240	300	77.741	-B240	063-42	29
5.8	142	30	142	240	300	87.563	-B240	063-42	29
5.6	149	29	149	450	563	89.534	-B450	063-42	32
5.1	165	26	165	450	563	99.274	-B450	063-42	32
5.1	161	26	161	240	300	99.437	-B240	063-42	29
4.5	185	23	185	450	495	111.372	-B450	063-42	32
4.4	184	23	184	240	300	113.673	-B240	063-42	29
4.1	205	21	205	450	495	123.487	-B450	063-42	32
3.9	209	20	209	240	300	129.087	-B240	063-42	29
3.5	240	18	240	450	495	144.128	-B450	063-42	32
3.5	236	18	236	240	300	145.674	-B240	063-42	29
3.2	266	16	266	450	495	159.807	-B450	063-42	32
3.1	268	16	268	240	300	165.426	-B240	063-42	29
2.9	291	15	291	450	495	174.919	-B450	063-42	32
2.6	322	13	322	450	495	193.948	-B450	063-42	32
2.3	372	12	372	450	495	223.563	-B450	063-42	32
2.1	412	10	412	450	495	247.882	-B450	063-42	32



Selection tables

M_{max} = 20 Nm

2-stage gearboxes

Mains operation						i	Product		
Min. output speed		Max. output speed		Starting torque					
n_{21} [r/min]	M_2 [Nm]	n_2 [r/min]	M_2 [Nm]	$M_{a,1}$ [Nm]	$M_{a,2}$ [Nm]		g500	MSEMA□□	
140	17	729	17	68	68	3.565	-B240	080-32	29
97	25	501	25	69	86	5.185	-B110	080-32	26
84	28	436	28	72	90	5.963	-B110	080-32	26
80	30	416	30	119	119	6.257	-B240	080-32	29
73	33	378	33	131	131	6.883	-B240	080-32	29
70	34	366	34	77	96	7.111	-B110	080-32	26
64	37	333	37	149	149	7.817	-B240	080-32	29
61	39	318	39	81	101	8.178	-B110	080-32	26
55	43	286	43	84	105	9.101	-B110	080-32	26
48	50	248	50	89	111	10.466	-B110	080-32	26
44	54	227	54	90	113	11.449	-B110	080-32	26
41	57	215	57	208	230	12.081	-B240	080-32	29
39	60	205	60	90	113	12.698	-B110	080-32	26
37	65	190	65	217	261	13.719	-B240	080-32	29
34	69	178	69	90	113	14.603	-B110	080-32	26
33	71	173	71	223	279	15.008	-B240	080-32	29
32	74	167	74	92	115	15.556	-B110	080-32	26
30	80	154	80	240	300	16.857	-B240	080-32	29
28	85	145	85	96	120	17.889	-B110	080-32	26
26	91	136	91	240	300	19.143	-B240	080-32	29
26	93	133	93	100	125	19.556	-B110	080-32	26
24	98	126	98	240	300	20.650	-B240	080-32	29
22	107	116	107	104	130	22.489	-B110	080-32	26
21	111	111	111	240	300	23.450	-B240	080-32	29
19	128	97	128	240	300	26.878	-B240	080-32	29
16	145	85	145	240	300	30.522	-B240	080-32	29
15	159	78	159	240	264	33.433	-B240	080-32	29
13	180	68	180	240	264	37.967	-B240	080-32	29
12	206	60	206	240	264	43.267	-B240	080-32	29
10	233	53	233	240	264	49.133	-B240	080-32	29
9.6	249	50	249	233	256	52.510	-B240	080-32	29
8.4	283	44	283	240	264	59.630	-B240	080-32	29

3-stage gearboxes

Mains operation						i	Product		
Min. output speed		Max. output speed		Starting torque					
n_{21} [r/min]	M_2 [Nm]	n_2 [r/min]	M_2 [Nm]	$M_{a,1}$ [Nm]	$M_{a,2}$ [Nm]		g500	MSEMA□□	
100	24	520	24	95	95	5.002	-B450	080-32	32
54	44	279	44	177	177	9.315	-B450	080-32	32
49	49	252	49	196	196	10.328	-B450	080-32	32



Selection tables

M_{max} = 20 Nm

3-stage gearboxes

Mains operation						i	Product		
Min. output speed		Max. output speed		Starting torque					
n_{21} [r/min]	M_2 [Nm]	n_2 [r/min]	M_2 [Nm]	$M_{a,1}$ [Nm]	$M_{a,2}$ [Nm]		g500	MSEMA□□	
31	78	159	78	311	311	16.349	-B450	080-32	32
28	85	145	85	340	340	17.885	-B450	080-32	32
25	94	131	94	377	377	19.831	-B450	080-32	32
22	108	114	108	425	433	22.813	-B450	080-32	32
20	120	103	120	450	481	25.294	-B450	080-32	32
18	133	93	133	450	531	27.945	-B450	080-32	32
16	147	84	147	450	563	30.985	-B450	080-32	32
14	173	71	173	450	563	36.373	-B450	080-32	32
12	192	64	192	450	563	40.330	-B450	080-32	32
11	215	57	215	450	495	45.245	-B450	080-32	32
10	238	52	238	450	495	50.167	-B450	080-32	32
9.0	267	46	267	450	563	56.154	-B450	080-32	32
8.1	296	42	296	450	563	62.262	-B450	080-32	32
7.3	327	38	327	450	563	68.788	-B450	080-32	32
6.6	362	34	362	450	563	76.271	-B450	080-32	32
5.6	425	29	425	450	563	89.534	-B450	080-32	32
5.1	471	26	471	450	563	99.274	-B450	080-32	32
4.5	529	23	529	450	495	111.372	-B450	080-32	32



Dimensions, notes

Notes on the dimensions

The following legend shows the layout of the dimension sheets.

Product gearbox

g500-B110

Driven shaft design

Abmessungen mit Hohlwelle

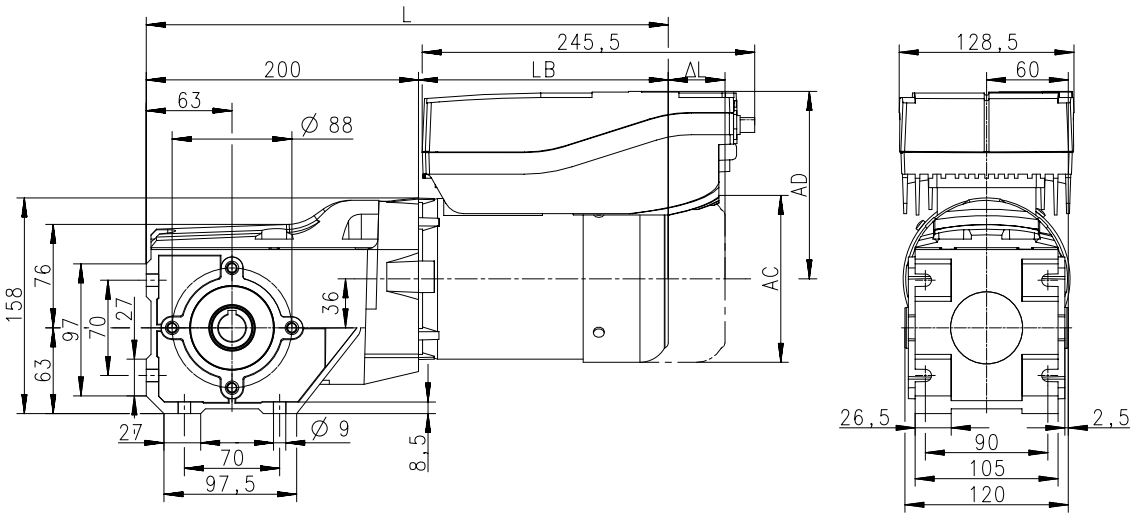

Product Motor

Produkt			MSEMA□□
			063-42
Abmessungen			
Gesamtlänge	**L**	**[mm]**	387
Länge Motor	**LB**	**[mm]**	187
Länge Motoranbauten	**Δ L**	**[mm]**	40
Motordurchmesser	**AC**	**[mm]**	123
Abstand Motor/Anschluss	**AD**	**[mm]**	140.5

Distance of motor centre to the end of terminal box

Total length of the drive without built-on accessories

Motor diameter

Motor length without built-on accessories

Additional length of the built-on accessories (longest version)



Dimensions

g500-B45

Dimensions with hollow shaft

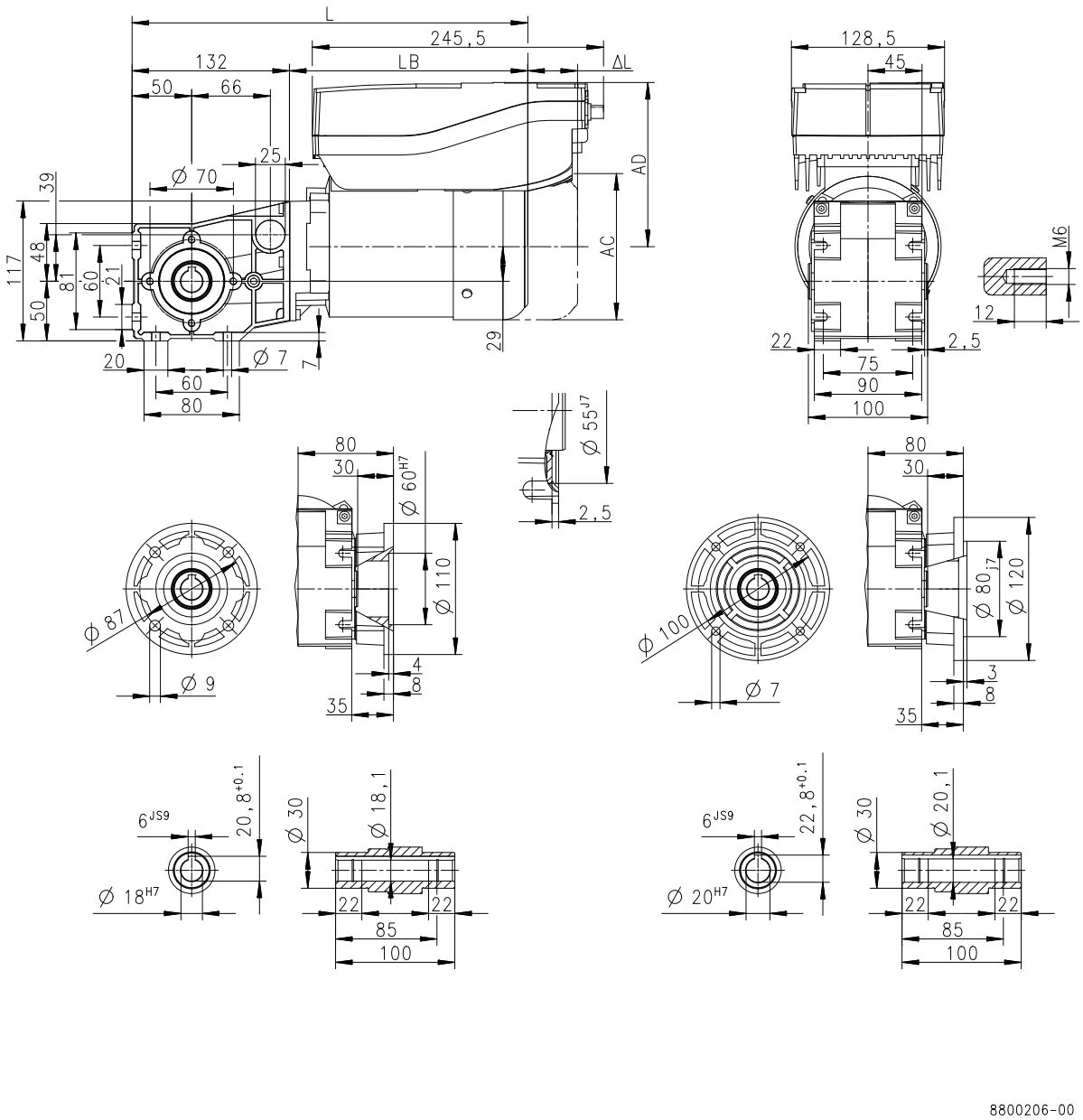

Product			MSEMA□□
			063-42
Dimensions			
Total length	**L**	**[mm]**	336
Motor length	**LB**	**[mm]**	187
Length of motor options	**Δ L**	**[mm]**	40
Motor diameter	**AC**	**[mm]**	123
Distance motor/connection	**AD**	**[mm]**	140.5



Dimensions

g500-B45

Dimensions with solid shaft

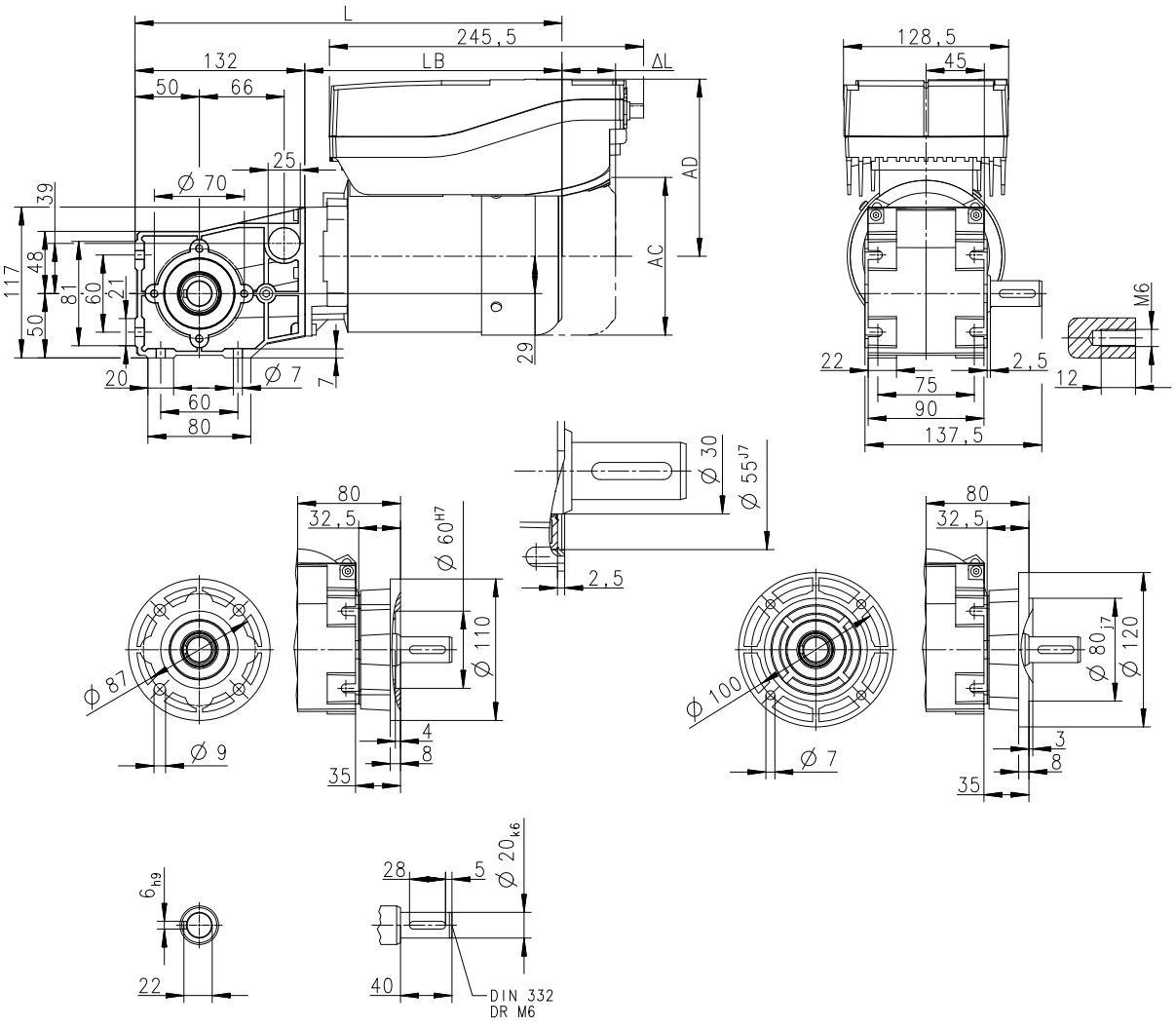

Product			MSEMA□□
			063-42
Dimensions			
Total length	**L**	**[mm]**	336
Motor length	**LB**	**[mm]**	187
Length of motor options	**Δ L**	**[mm]**	40
Motor diameter	**AC**	**[mm]**	123
Distance motor/connection	**AD**	**[mm]**	140.5



Dimensions

g500-B45

Dimensions with shrink disc

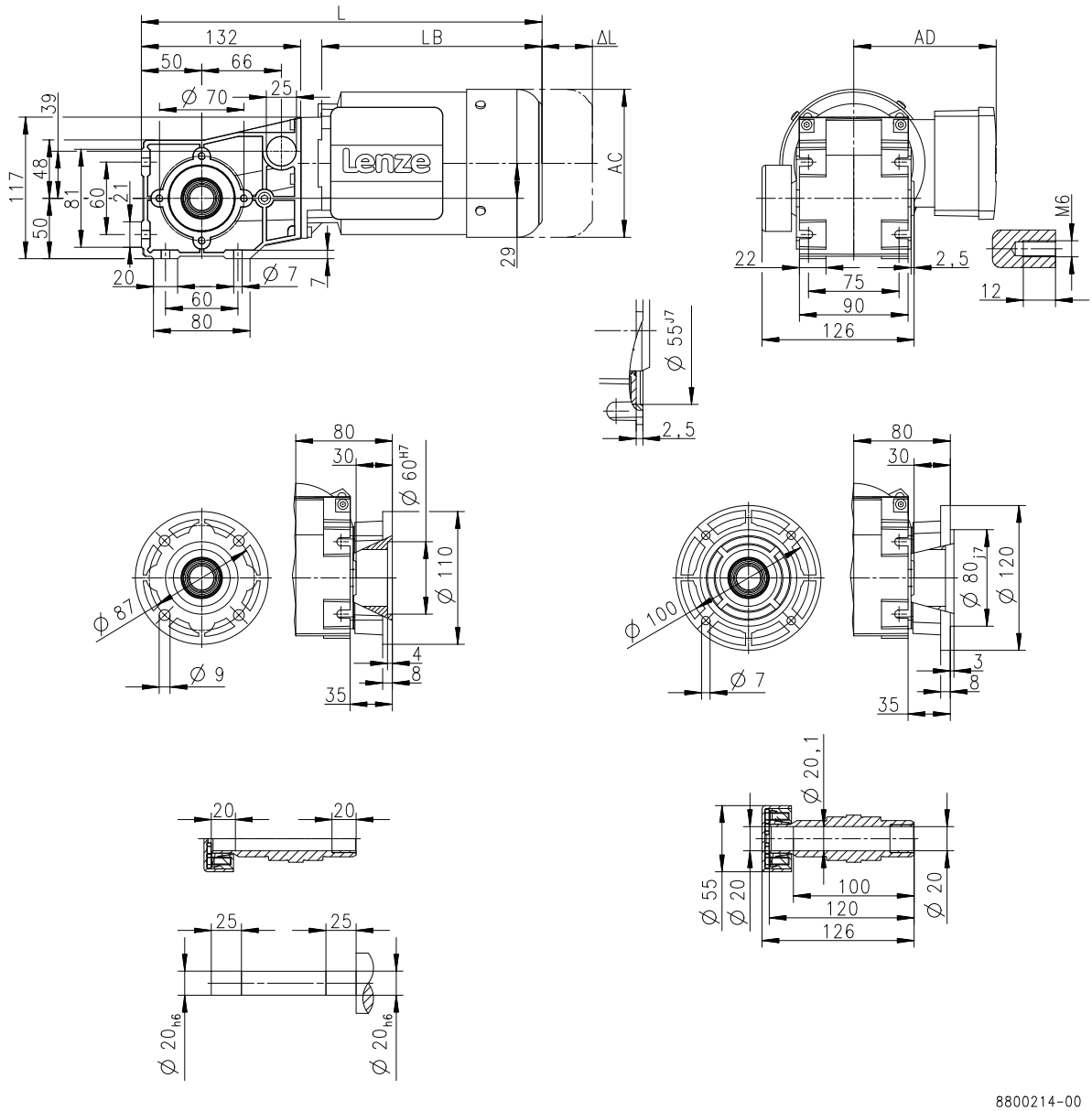

Product			MSEMA□□
			063-42
Dimensions			
Total length	**L**	**[mm]**	336
Motor length	**LB**	**[mm]**	187
Length of motor options	**Δ L**	**[mm]**	40
Motor diameter	**AC**	**[mm]**	123
Distance motor/connection	**AD**	**[mm]**	140.5



Dimensions

g500-B110

Dimensions with hollow shaft

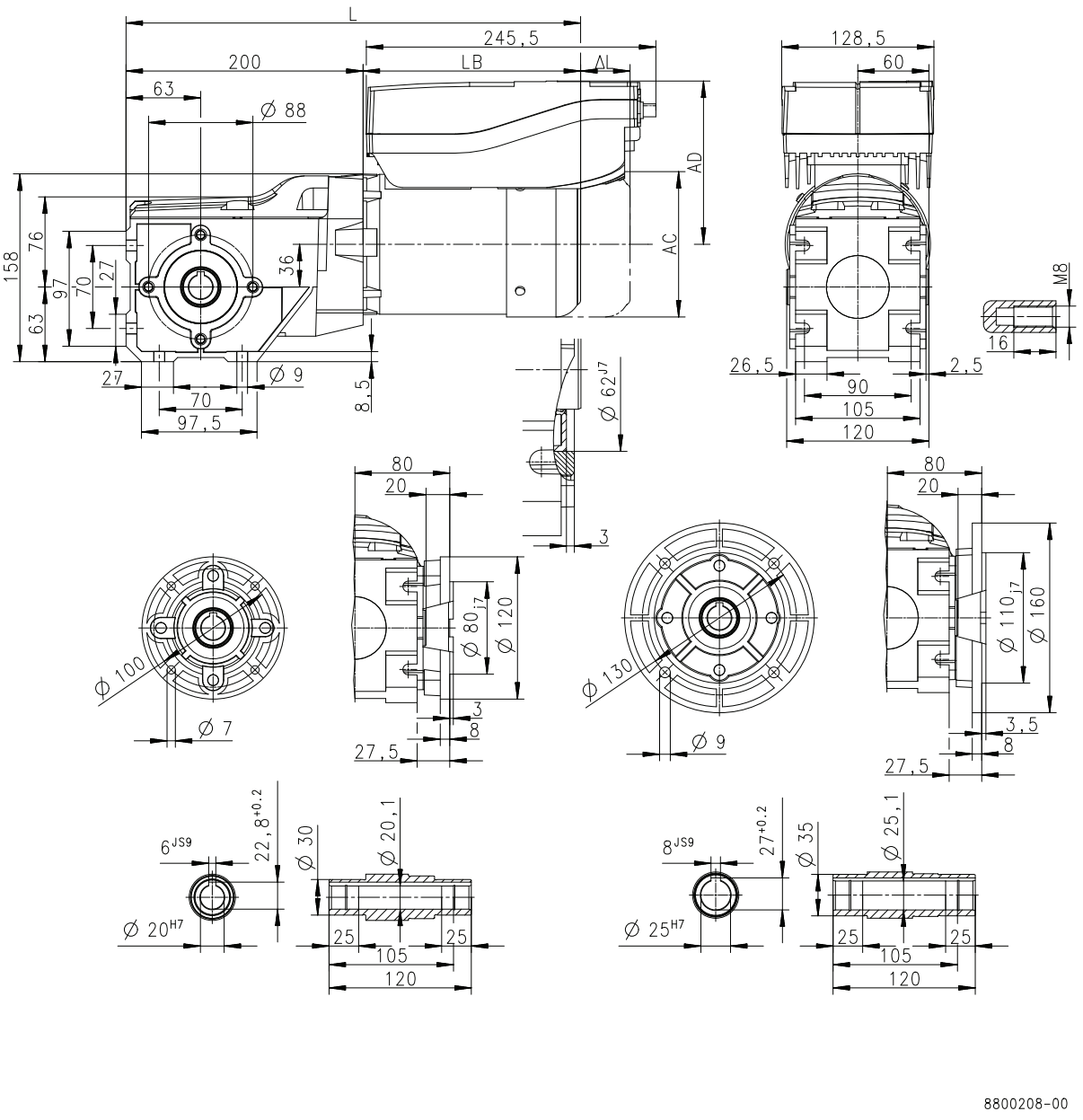

Product			MSEMA□□	
			063-42	080-32
Dimensions				
Total length	**L**	**[mm]**	387	426
Motor length	**LB**	**[mm]**	187	226
Length of motor options	**Δ L**	**[mm]**	40	73
Motor diameter	**AC**	**[mm]**	123	156
Distance motor/connection	**AD**	**[mm]**	140.5	158.5



Dimensions

g500-B110

Dimensions with solid shaft

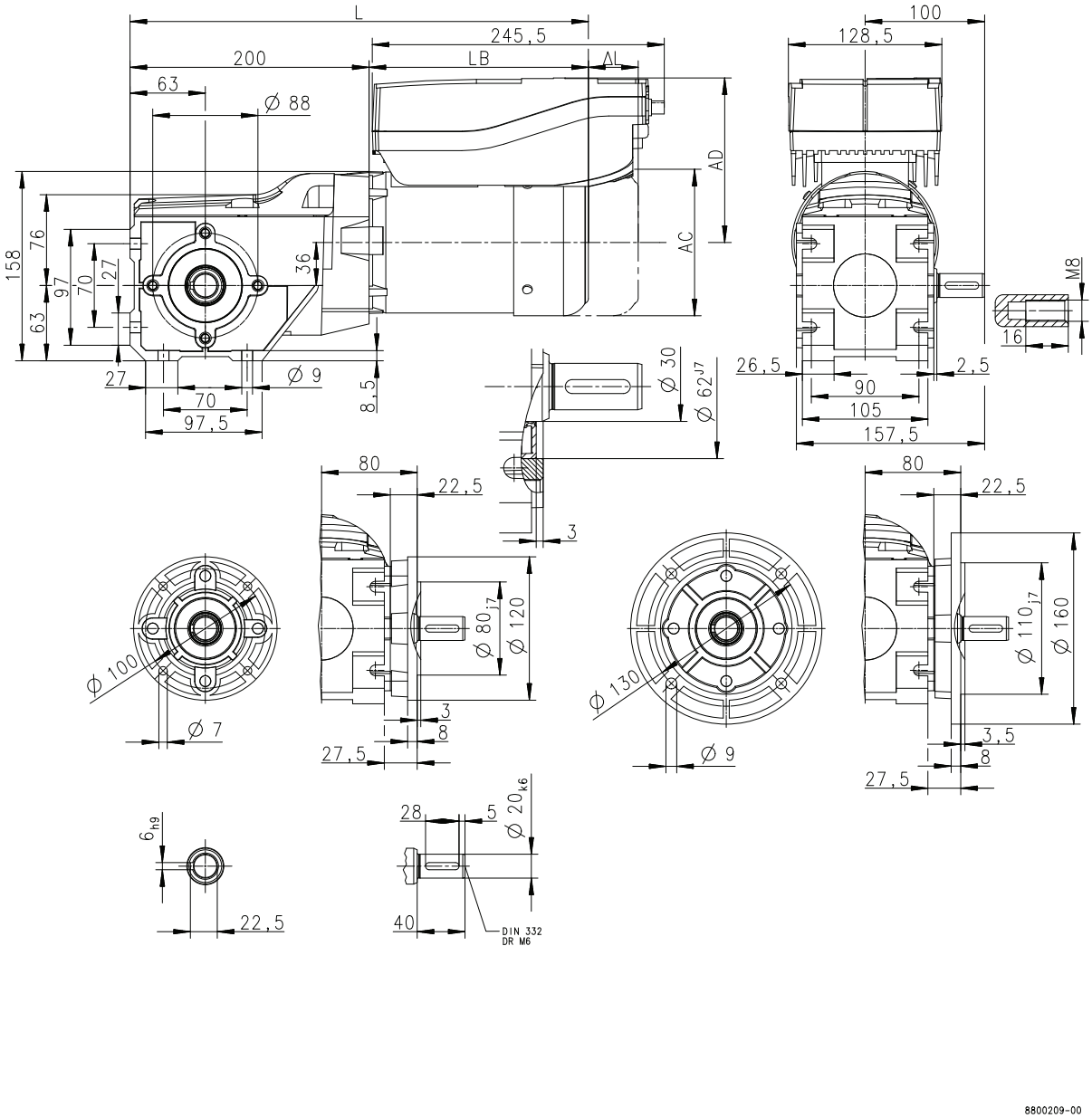

Product			MSEMA□□	
			063-42	080-32
Dimensions				
Total length	**L**	**[mm]**	387	426
Motor length	**LB**	**[mm]**	187	226
Length of motor options	**Δ L**	**[mm]**	40	73
Motor diameter	**AC**	**[mm]**	123	156
Distance motor/connection	**AD**	**[mm]**	140.5	158.5



Dimensions

g500-B110

Dimensions with shrink disc

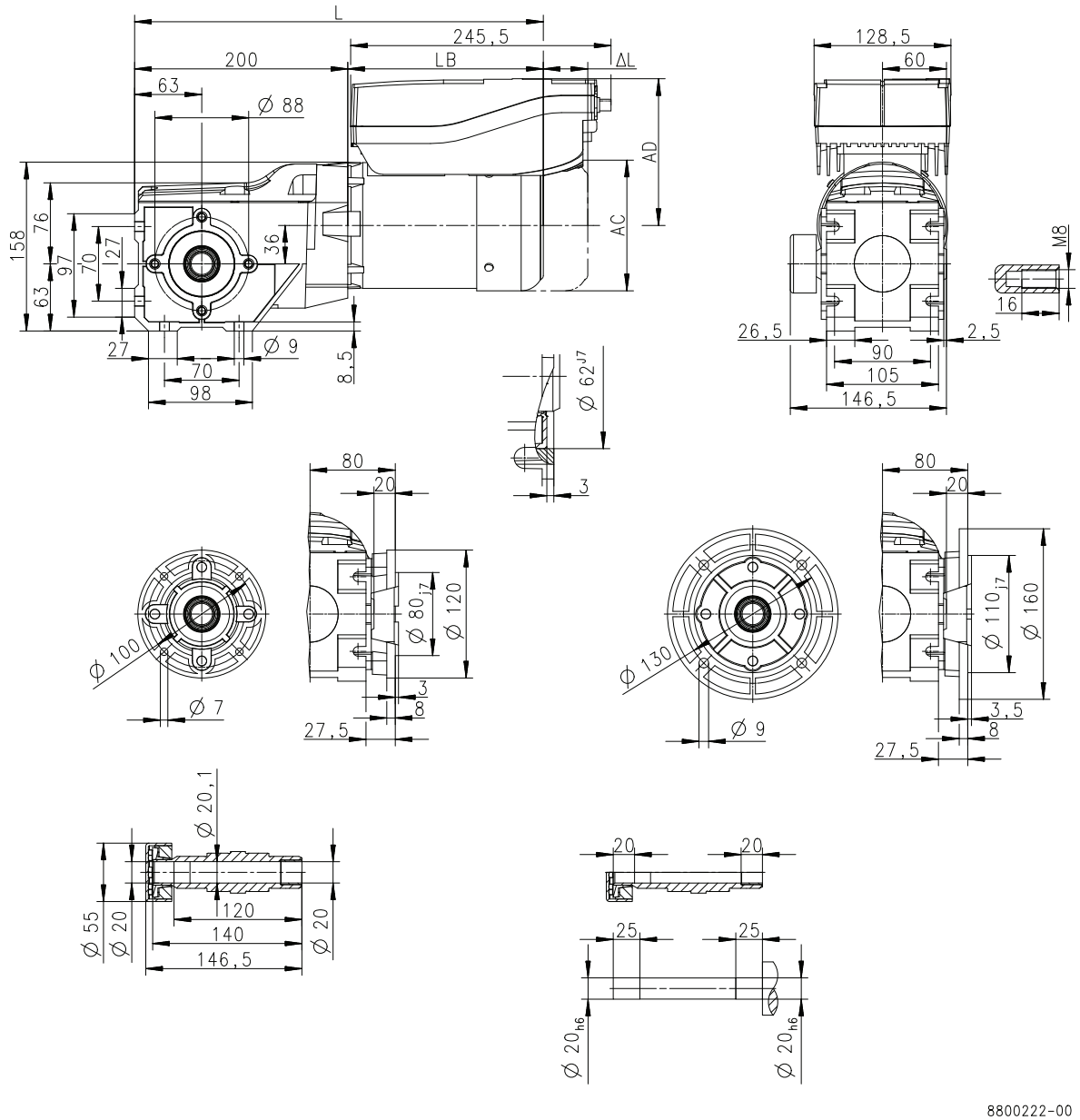

Product			MSEMA□□	
			063-42	080-32
Dimensions				
Total length	**L**	**[mm]**	387	426
Motor length	**LB**	**[mm]**	187	226
Length of motor options	**Δ L**	**[mm]**	40	73
Motor diameter	**AC**	**[mm]**	123	156
Distance motor/connection	**AD**	**[mm]**	140.5	158.5



Dimensions

g500-B240

Dimensions with hollow shaft

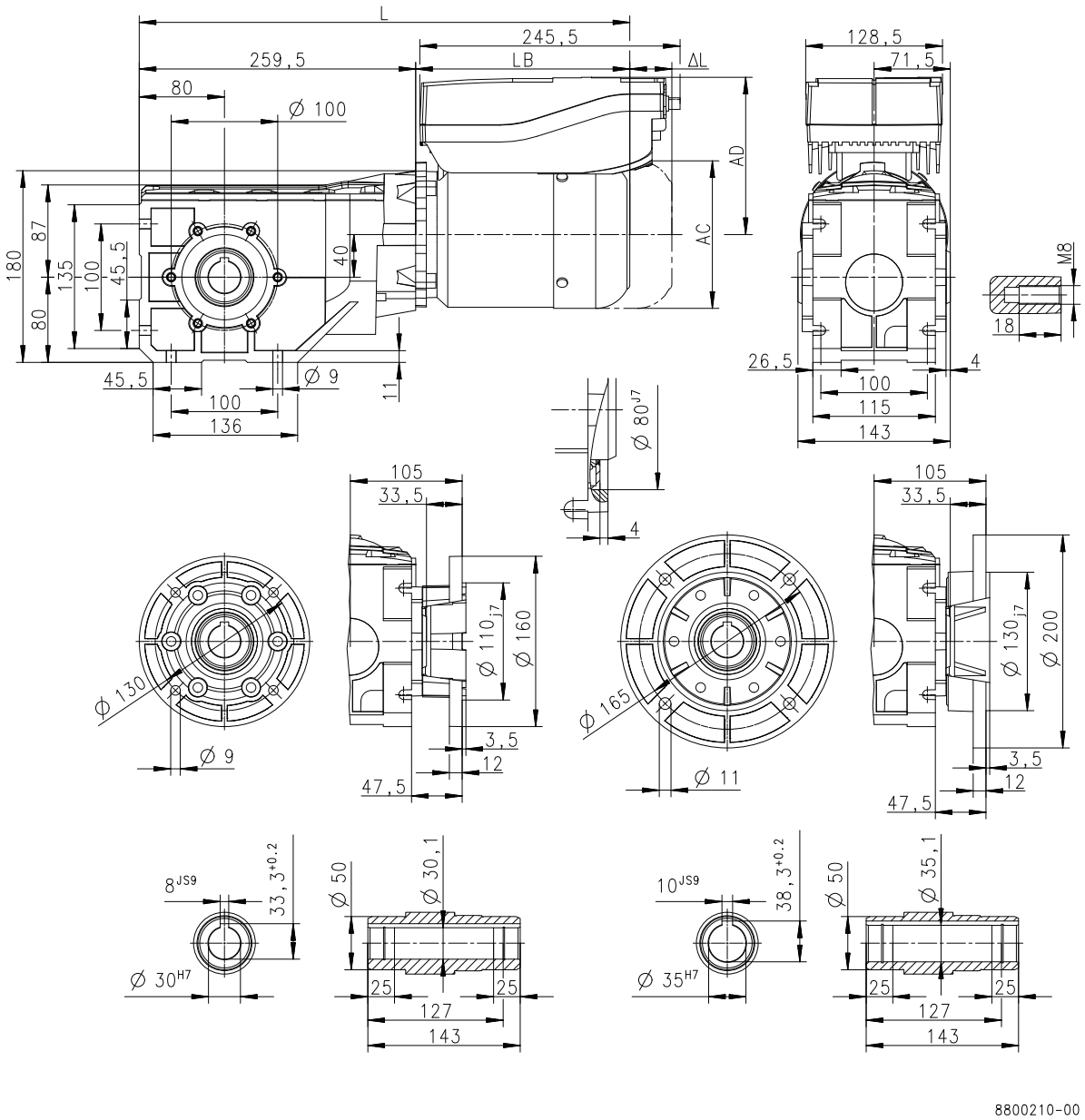

Product			MSEMA□□	
			063-42	080-32
Dimensions				
Total length	**L**	**[mm]**	447	486
Motor length	**LB**	**[mm]**	187	226
Length of motor options	**Δ L**	**[mm]**	40	73
Motor diameter	**AC**	**[mm]**	123	156
Distance motor/connection	**AD**	**[mm]**	140.5	158.5



Dimensions

g500-B240

Dimensions with solid shaft

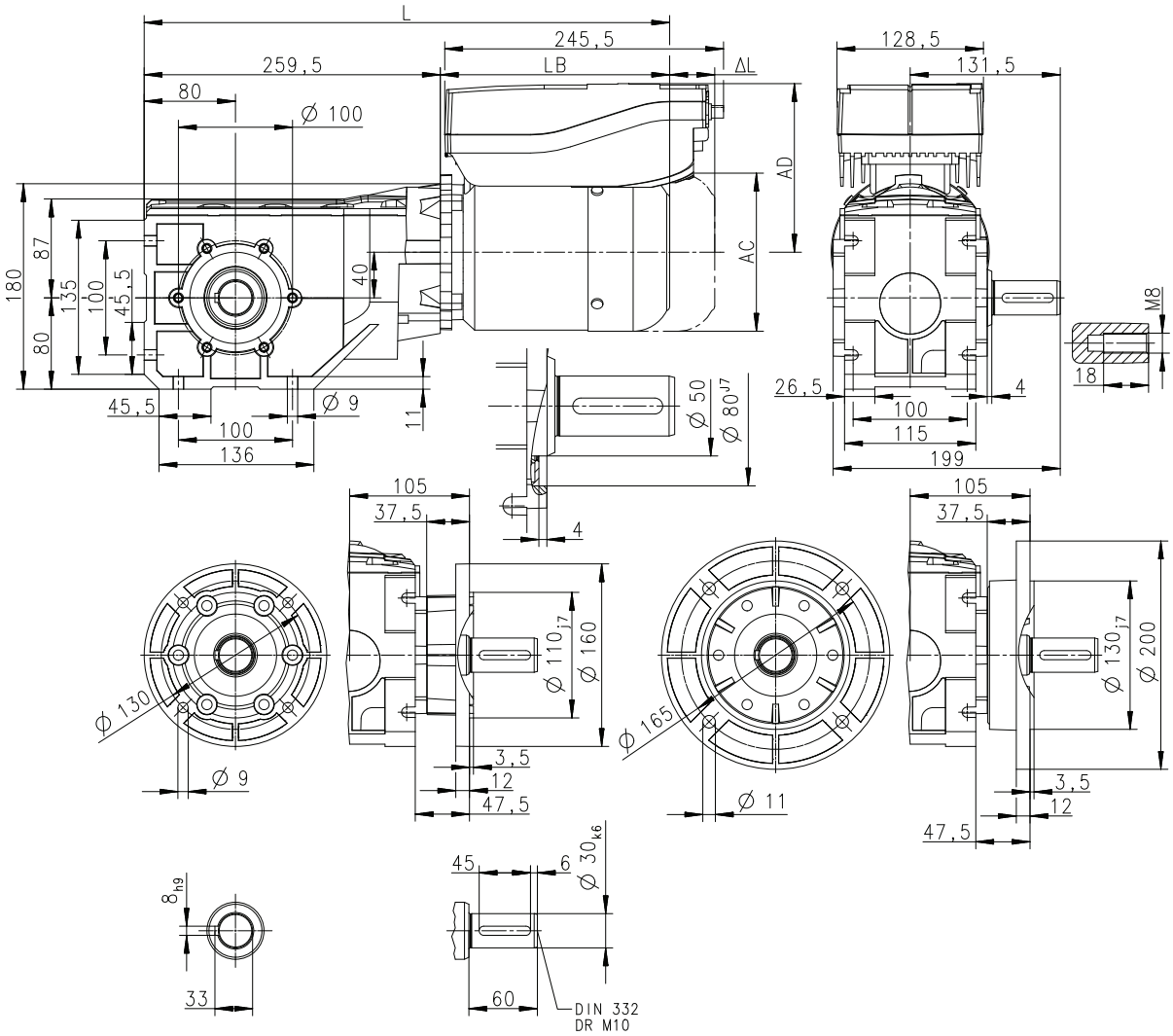

Product			MSEMA□□	
			063-42	080-32
Dimensions				
Total length	**L**	**[mm]**	447	486
Motor length	**LB**	**[mm]**	187	226
Length of motor options	**Δ L**	**[mm]**	40	73
Motor diameter	**AC**	**[mm]**	123	156
Distance motor/connection	**AD**	**[mm]**	140.5	158.5



Dimensions

g500-B240

Dimensions with shrink disc

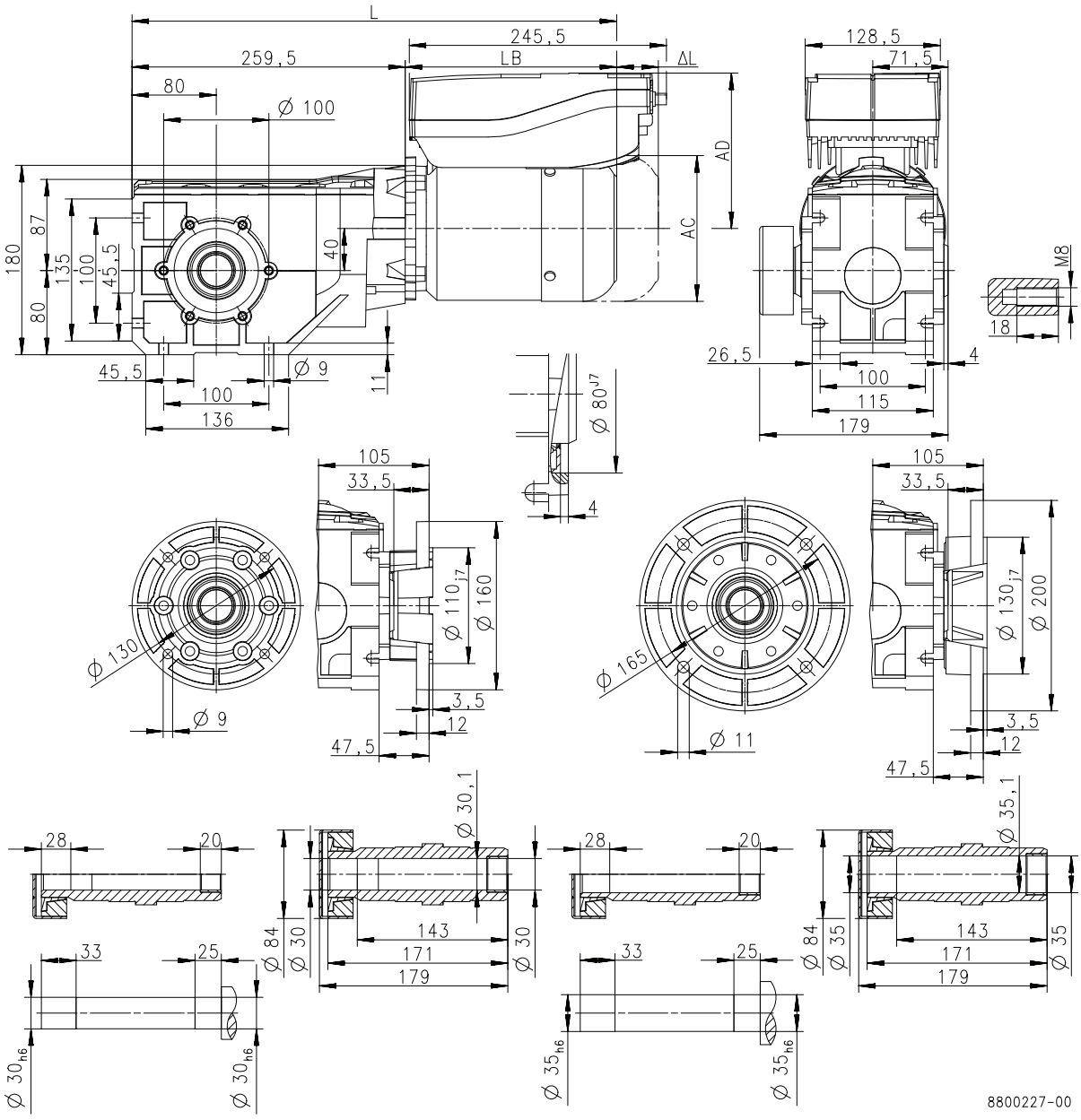

Product			MSEMA□□	
			063-42	080-32
Dimensions				
Total length	**L**	**[mm]**	447	486
Motor length	**LB**	**[mm]**	187	226
Length of motor options	**Δ L**	**[mm]**	40	73
Motor diameter	**AC**	**[mm]**	123	156
Distance motor/connection	**AD**	**[mm]**	140.5	158.5



Dimensions

g500-B450

Dimensions with hollow shaft

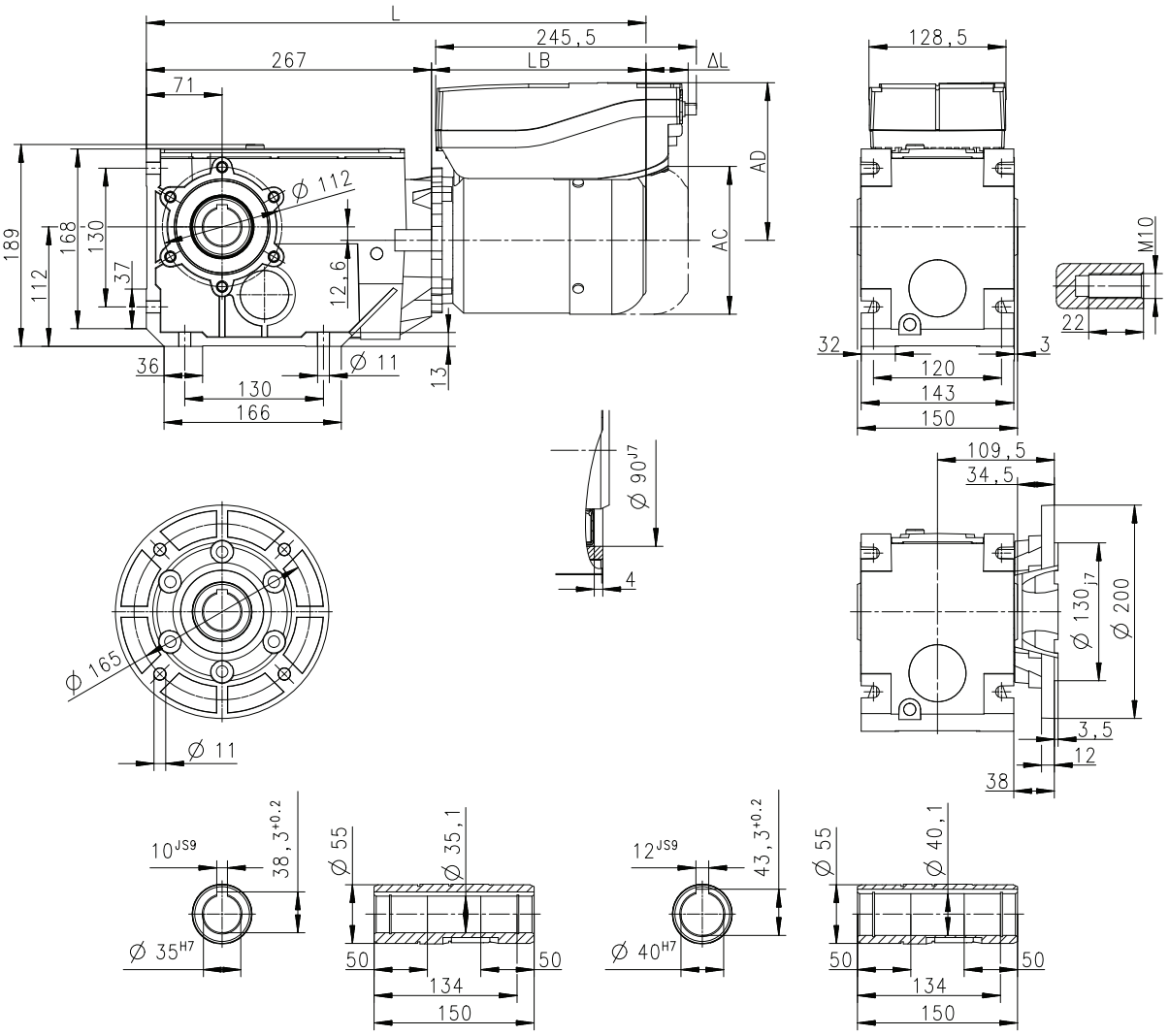

Product			MSEMA□□	
			063-42	080-32
Dimensions				
Total length	**L**	**[mm]**	454	493
Motor length	**LB**	**[mm]**	187	226
Length of motor options	**Δ L**	**[mm]**	40	73
Motor diameter	**AC**	**[mm]**	123	156
Distance motor/connection	**AD**	**[mm]**	140.5	158.5



Dimensions

g500-B450

Dimensions with solid shaft

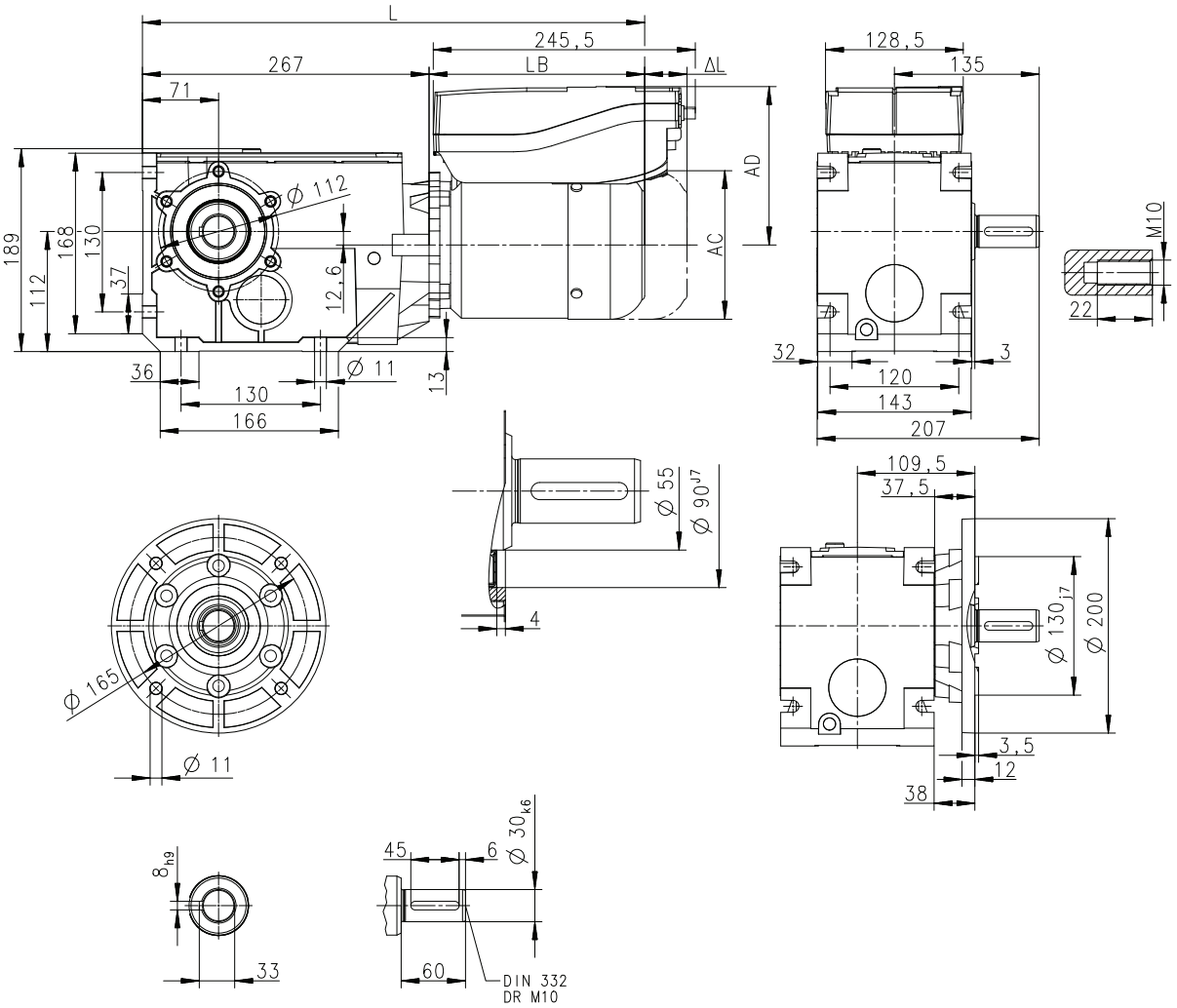

Product			MSEMA□□	
			063-42	080-32
Dimensions				
Total length	**L**	**[mm]**	454	493
Motor length	**LB**	**[mm]**	187	226
Length of motor options	**Δ L**	**[mm]**	40	73
Motor diameter	**AC**	**[mm]**	123	156
Distance motor/connection	**AD**	**[mm]**	140.5	158.5



Dimensions

g500-B450

Dimensions with shrink disc

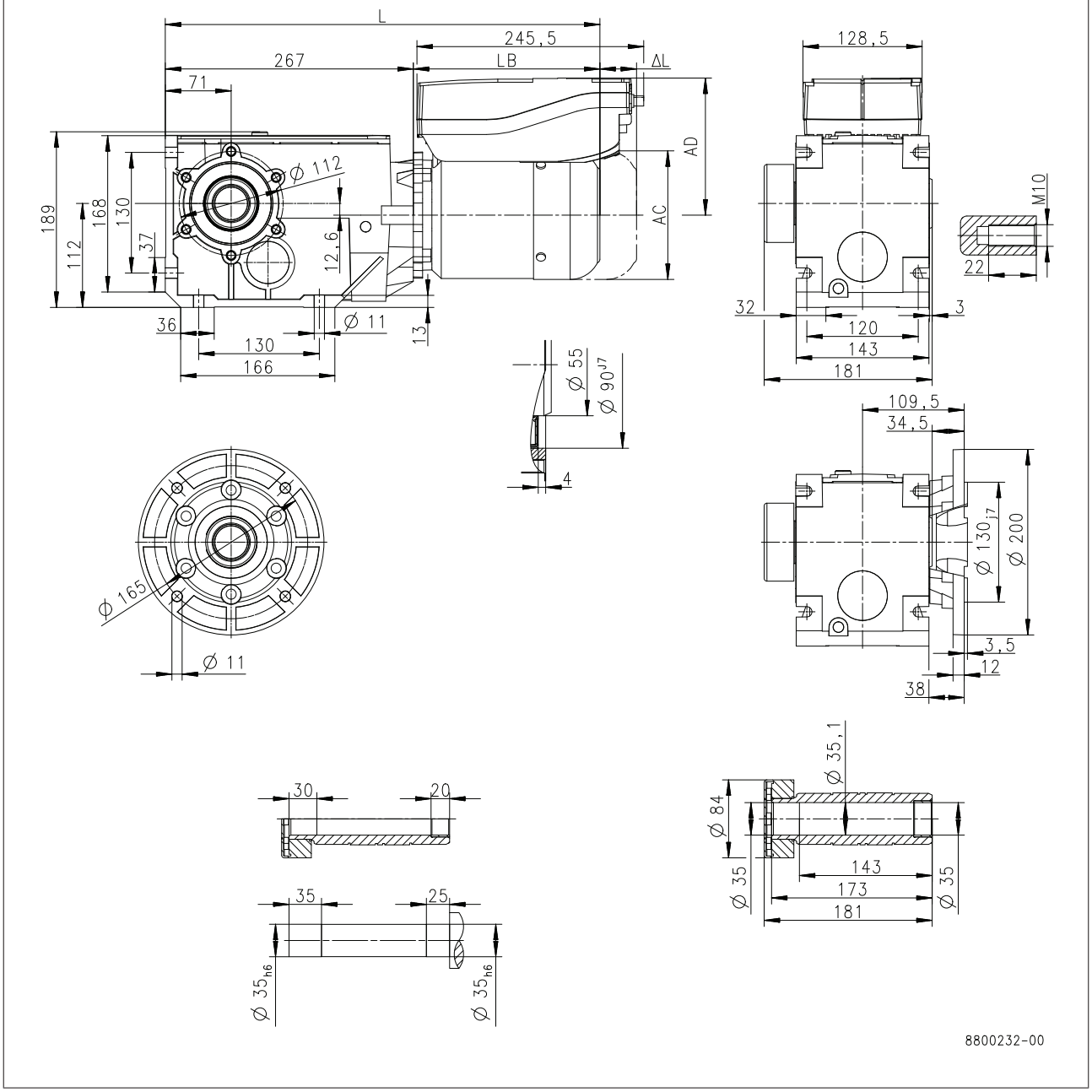

Product			MSEMA□□	
			063-42	080-32
Dimensions				
Total length	**L**	**[mm]**	454	493
Motor length	**LB**	**[mm]**	187	226
Length of motor options	**Δ L**	**[mm]**	40	73
Motor diameter	**AC**	**[mm]**	123	156
Distance motor/connection	**AD**	**[mm]**	140.5	158.5



Weights

2-stage gearboxes

				MSEMA□□	
				063-42	080-32
g500	-B45	m	[kg]	8.8	
	-B110	m	[kg]	10	17
	-B240	m	[kg]	14	21

3-stage gearboxes

				MSEMA□□	
				063-42	080-32
g500	-B240	m	[kg]	14	
	-B450	m	[kg]	17	24



Surface and corrosion protection

For optimum protection of geared motors against ambient conditions, the surface and corrosion protection system (OKS) offers tailor-made solutions.

Various surface coatings combined with other protective measures ensure that the geared motors operate reliably even at high air humidity, in outdoor installations or in the presence of atmospheric impurities. Any colour from the RAL Classic collection can be chosen for the top coat. The geared motors are also available unpainted (no surface and corrosion protection).

Surface and corrosion protection	Applications	Measures
OKS-G (primed)	• Dependent on subsequent top coat applied	• 2K PUR priming coat (grey) • Zinc-coated screws • Rust-free breather elements Optional measures • Stainless steel nameplate
-	• Standard applications • Internal installation in heated buildings • Air humidity up to 90%	• Surface coating as per corrosivity category C1 (in line with EN 12944-2) • Zinc-coated screws • Rust-free breather elements Optional measures • Stainless steel nameplate
OKS-M (medium)	• Internal installation in non-heated buildings • Covered, protected external installation • Air humidity up to 95%	• Surface coating as per corrosivity category C2 (in line with EN 12944-2) • Zinc-coated screws • Rust-free breather elements Optional measures • Stainless steel shaft • Stainless steel nameplate • Rust-free shrink disc (on request)
OKS-L (large)	• External installation • Air humidity above 95% • Chemical industry plants • Food industry	• Surface coating as per corrosivity category C3 (in line with EN 12944-2) - -



Surface and corrosion protection

Structure of surface coating

Surface and corrosion protection	Corrosivity category	Surface coating	Colour
	DIN EN ISO 12944-2	Structure	
Without OKS(uncoated)		Dipping primed gearbox	
OKS-G (primed)		Dipping primed gearbox 2K PUR priming coat	
-	C1	Dipping primed gearbox 2K-PUR top coat	Standard: RAL 7012 Optional: RAL Classic
OKS-M (medium)	C2	Dipping primed gearbox 2K PUR priming coat 2K-PUR top coat	
OKS-L (large)	C3		







g500-B bevel gearboxes

45 to 450 Nm

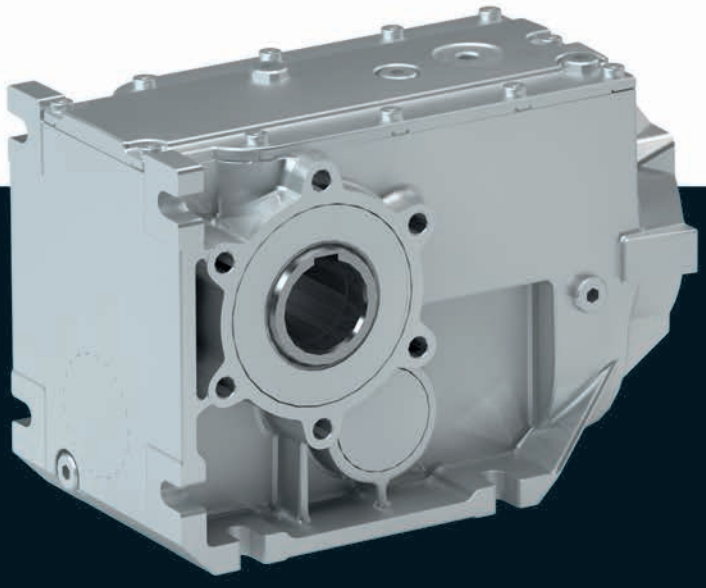

g500-B bevel gearbox

Contents

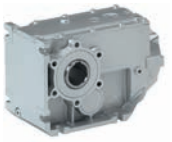

General information	List of abbreviations	6.5.1 - 5
	Product information	6.5.1 - 6
	Equipment	6.5.1 - 7
	The gearbox kit	6.5.1 - 8
	Functions and features	6.5.1 - 10
	Lubricants	6.5.1 - 11
	Ventilation	6.5.1 - 12
Technical data	Permissible radial and axial forces at output	6.5.1 - 15
	Moments of inertia	6.5.1 - 17
	Additional weights for gearboxes	6.5.1 - 19
Accessories	Torque plate	6.5.1 - 21
	Shaft cover	6.5.1 - 26

g500-B bevel gearbox

Contents

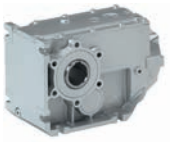

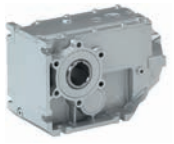

List of abbreviations

$F_{ax,max}$	[N]	Max. axial force
$F_{rad,max}$	[N]	Max. radial force
i		Ratio
J	[kgcm²]	Moment of inertia
m	[kg]	Mass

g500-B bevel gearbox

General information

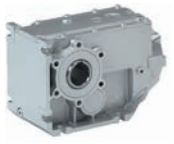

Product information

The efficient bevel gearboxes feature high reliable radial forces, closely stepped gear reductions and a low backlash. They are available in 2-pole and 3-pole design with a torque up to 450 Nm and a ratio of up to i= 360.

Versions

- High-efficient right-angle gearbox in a compact design for space-saving installation
- Standardised shaft and flange dimensions for an easy machine integration
- Low backlash and high torsional stiffness provide for exact results in positioning applications

The product name

Gearbox type	Product range		Design	Rated torque [Nm]	Product
Bevel gearbox	g500	-	B	45	g500-B45
				110	g500-B110
				240	g500-B240
				450	g500-B450



Equipment

Overview

The equipment includes all the options available as standard and all the built-on accessories of the product.

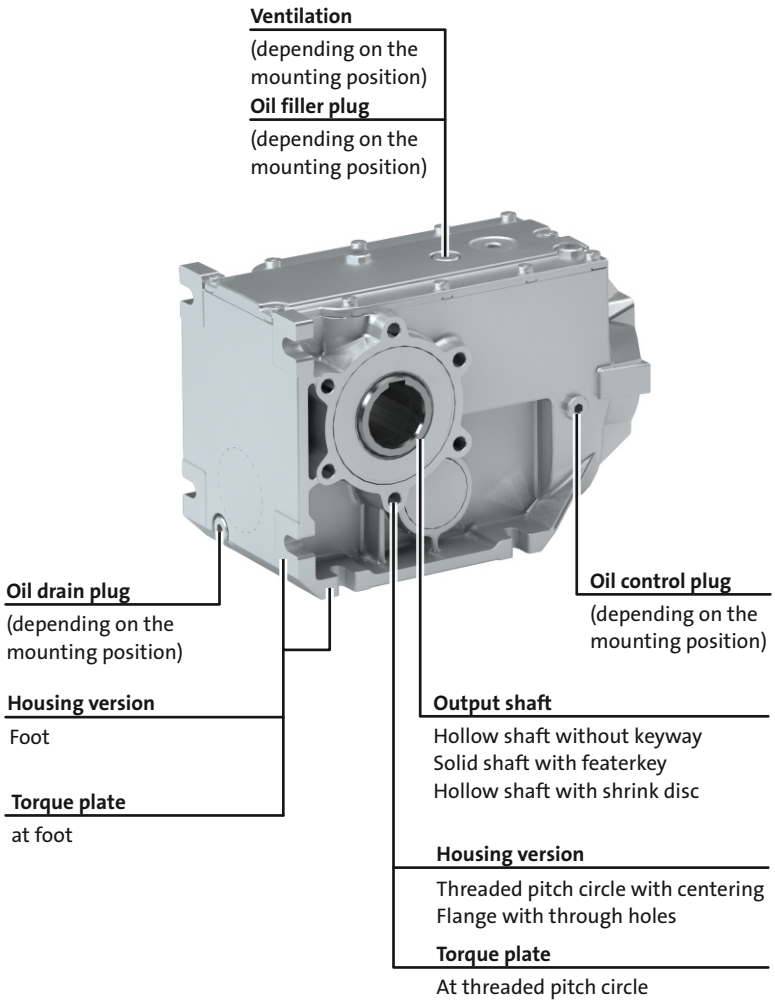

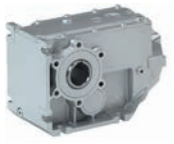

The gearbox kit

Gearbox details

Product	g500-B45	g500-B110	g500-B240	g500-B450
Driven shaft				
Solid shaft without keyway [mm]				
Solid shaft with featherkey [mm]	20x40		30x60	
Hollow shaft with keyway [mm]	18/20	20/25	30/35	35/40
Hollow shaft with shrink disc [mm]	20		30/35	35
Design	Standard stainless steel			
Gasket	Standard FPM (Viton)			
Bearing	Standard			
Fitting grease	Not enclosed Enclosed			
Housing				
Housing version	With foot With foot and centering			
Output flange				
flange diameter [mm]	110/120	120/160	160/200	200
Lubricant				
Type	CLP 460 [1)] CLP HC 320 CLP HC 220 CLP HC 220 USDA H1			
Oil-level inspection	Without inspection			Without inspection With inspection
Breather element	Without			Standard mounting position: Mounted Combined mounting position: loosely enclosed
Backlash				
Backlash	Standard			
Accessories				
Torque plate	Rubber buffers At threaded pitch circle	At threaded pitch circle	At threaded pitch circle At foot	At foot
Shaft cover	Hollow shaft Shrink disc: Rotating cover Shrink disc: Fixed cover			

[1)] Not suitable for geared servo motors.

6.5.1

► Further information and installation feasibilities can be found in the Gearboxes chapter.

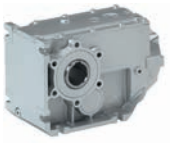

The gearbox kit

Gearbox details

Solid shaft



Foot mounting
without centring



Foot mounting
With centering



Flange with through holes

Hollow shaft



Foot mounting
without centring



Foot mounting
With centering



Flange with through holes

Hollow shaft with shrink disc



Foot mounting
without centring



Foot mounting
With centering

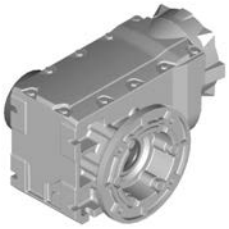

Flange with through holes

Accessories



2nd output shaft end



Torque plate
at foot



Torque plate
at threaded pitch circle

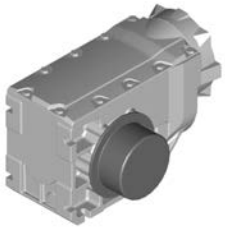

Cover
Hollow shaft/shrink disc

6.5.1

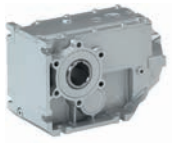

Functions and features

Product	g500-B45	g500-B110	g500-B240	g500-B450
Housing				
Design	Cuboid			
Material	Aluminium			
Solid shaft				
Design	with keyway to DIN 6885			
Tolerance	Shaft diameter ≤ 50 mm: k6 Shaft diameter > 50 mm: m6			
Material	Tempered steel C45 Nirosta X46Cr13			
Hollow shaft				
Design	With keyway Without keyway (for shrink disc)			
Tolerance	Bore H7			
Material	Tempered steel C45 Nirosta X46Cr13			
Toothed parts				
Design	Ground tooth flanks Optimised tooth flank geometry			
Material	Case-hardened steel			
Shaft-hub joint				
	1st and 2nd step: Force-fit 3rd step: positive-fit			
Shaft sealing rings				
Design	With dust lip			
Material	NB / FP			
Bearing				
Design	Ball bearing / tapered-roller bearing depending on size and design			
Lubricants				
	Standard: mineral oil Optional: synthetic oil [1]			
Quantities	Corresponding to mounting position (see nameplate)			
Mechanical efficiency				
2-stage gearboxes [$\eta_{c=1}$]	0.96			
3-stage gearboxes [$\eta_{c=1}$]			0.95	

[1] Standard for geared servo motors.

Direction of rotation

2-stage gearboxes B45 ... B240 3-stage gearbox B450	3-stage gearbox B240
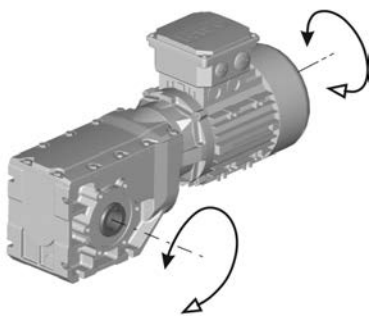	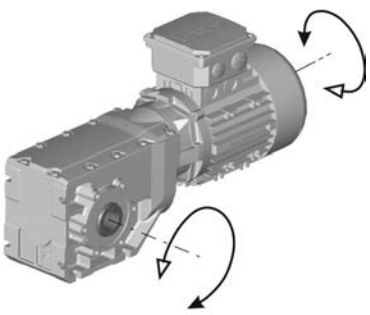

6.5.1

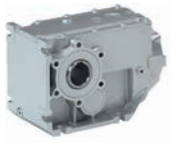

Lubricants

Lenze gearboxes and geared motors are ready for operation on delivery and are filled with lubricants specific to both the drive and the design. The mounting position and design specified in the order are key factors in choosing the volume of lubricant.

The lubricants listed in the lubricant table are approved for use in Lenze drives.

Lubricant table

Mode	CLP 460	CLP HC 320	CLP HC 220 USDA H1
Ambient temperature [°C]	0 ... +40	-25 ... +50	-20 ... +40
Specification	Mineral based oil with additives	Synthetic-based oil (synthetic hydrocarbon / poly-alpha-olefin oil)	
Changing interval	16000 operating hours not later than after three years (oil temperature 70 to 80 °C)	25000 operating hours not later than after three years (oil temperature 70 to 80 °C)	16000 operating hours not later than after three years (oil temperature 70 to 80 °C)
Fuchs	Fuchs Renolin CLP 460	Fuchs Renolin Unisyn CLP 320	bremer & leguil Cassida Fluid GL 220
Klüber	Klüberoil GEM1-460 N	Klübersynth GEM4-320 N	Klüberoil 4 UH1-220 N
Shell	Shell Omala S2 G 460	Shell Omala S4 GX HD 320	

► Please contact your Lenze sales office if you are operating at ambient temperatures in areas up to< -20 °C bzw. > or up to +40°C.

Shaft sealing rings

By default, the gearboxes come with NBR shaft sealing rings at the output end. At high speed and unfavourable ambient conditions as high temperature, reduced circulation of air etc., Lenze recommends the use of Viton shaft sealing rings.

Please consider this in your order.



Ventilation

Non-ventilated gearboxes

No ventilation is required for gearboxes g500-B45 to B240.

Ventilated gearboxes

The g500-B450 gearbox is supplied with a breather element as standard.

Gearboxes in combined mounting position

To reduce the number of different versions, the gearboxes can also be ordered with combined mounting positions.
Depending on the gearbox in question, the following combinations are available:
- g500-B45 in combined mounting position ABCDEF
- g500-B110 ... B450 in combined mounting position AEF

The breather elements are supplied loose.

Ventilation

g500-B240

Breather position, oil filling screw and drain plug

► **A ... F** mounting position

Gearbox g500-B240

A

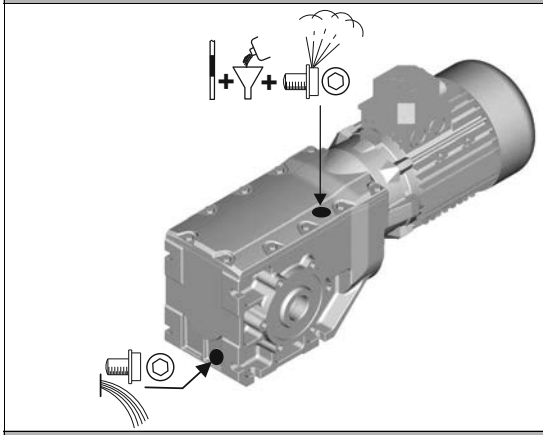

B

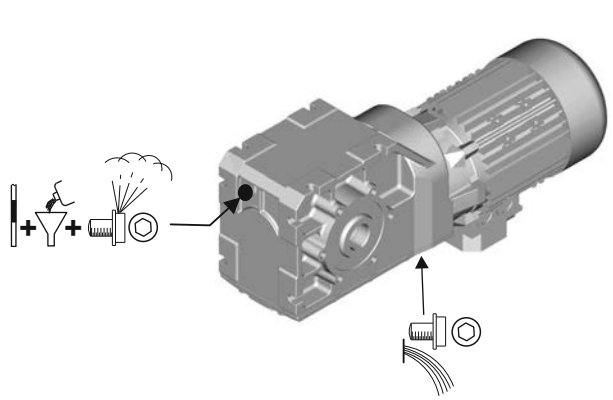

C

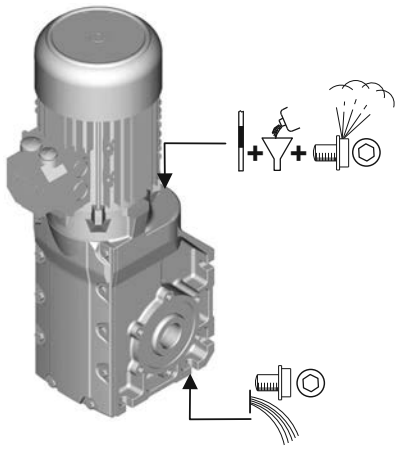

D

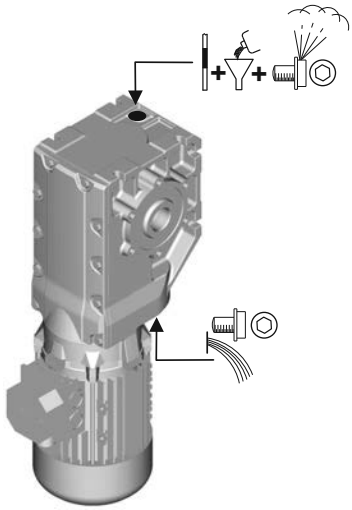

E

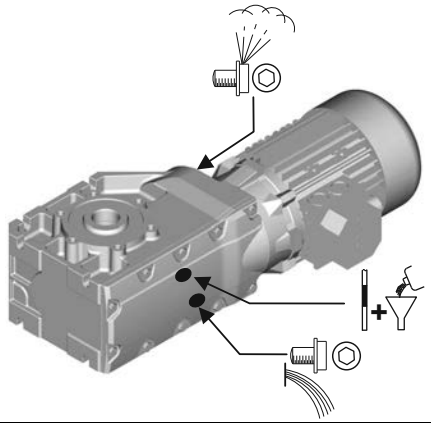

F

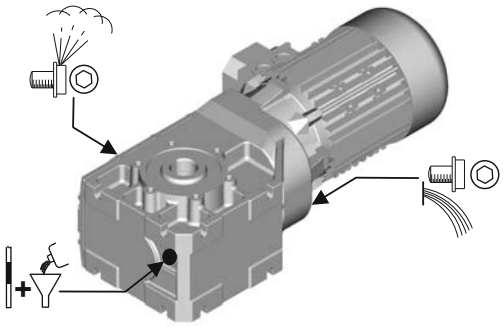

	Filler		Drain
	Breather element		Check

The shown oil bores are optional for gearbox size g500-B240!

EN

6.5.1



7 Maintenance

Ventilation Maintenance operations

g500-B450

► **A ... F** mounting position

Gearbox g500-B450

A	B
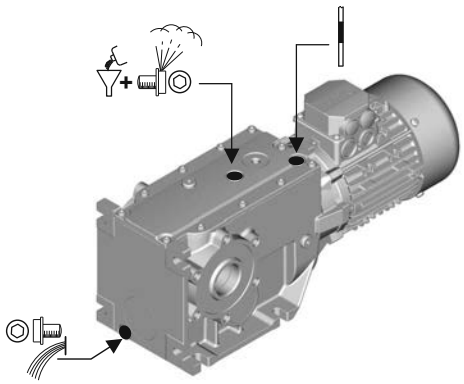	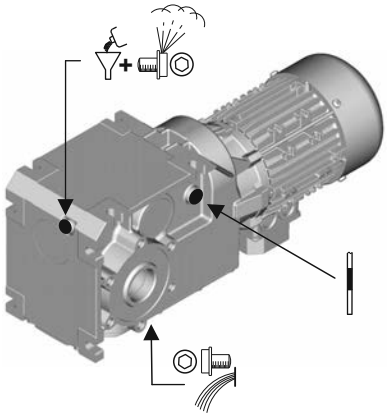
C	**D**
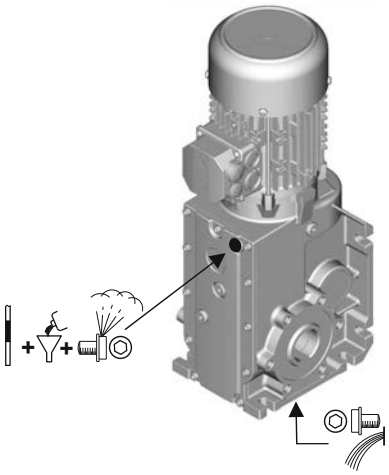	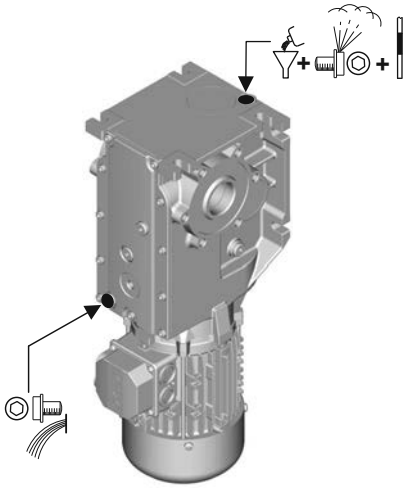
E	**F**
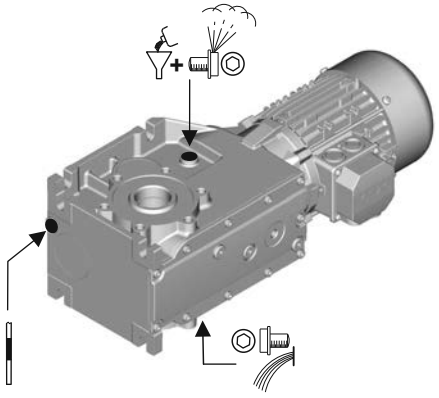	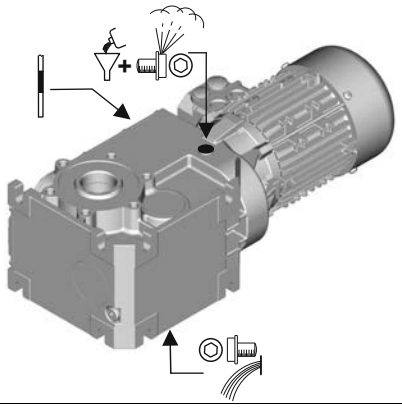

	Filler		Drain
	Breather element		Check

EN

6.5.1

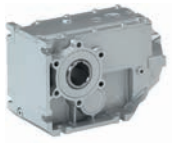

Permissible radial and axial forces at output

Permissible radial force

$F_{rad,perm} = f_w \times F_{rad,max}$

► If F_{rad} **and** $F_{ax} \neq 0$, please contact Lenze.

Permissible axial force

If there is no radial force, the maximum permissible axial force is 50 % of the table value $F_{rad,max}$

Application of forces

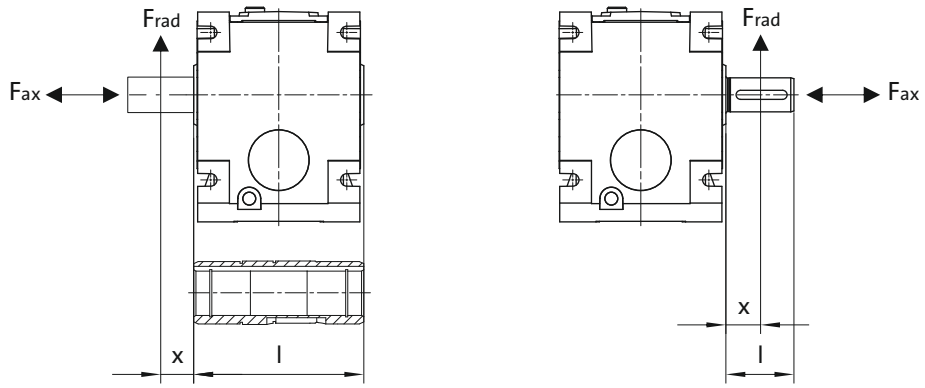

Additional load factor f_w at output shaft

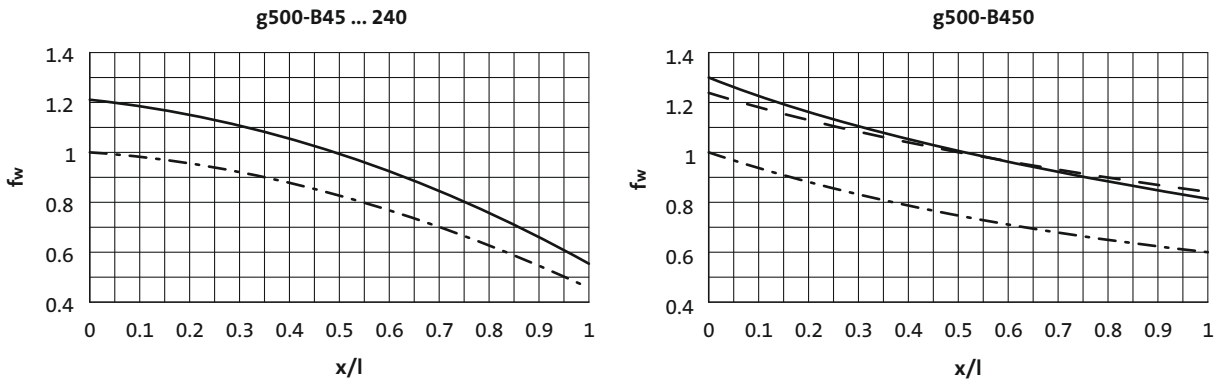

——— Solid shaft
— — — Solid shaft with flange
— · — Hollow shaft

6.5.1

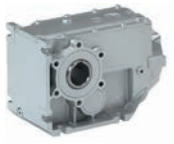

Permissible radial and axial forces at output

The values given in the table refer to the center shaft end force application point and are minimum values calculated according to the most unfavourable conditions (force application angle, mounting position, direction of rotation). The values were calculated for the motor/gearbox combination with a load capacity of c= 1.3 and an input speed of 1400 rpm.

- ► If the torque is transmitted via the flange face, max 50 % of the radial force $F_{rad,max}$ are permissible.
- ► Neither radial nor axial forces are permissible for the hollow shaft with shrink disc.

In case of different operating conditions, considerably higher forces can be transmitted. Please contact Lenze.

Product	n_2 [r/min]									
	1000	630	400	250	160	100	63	40	25	≤16

	Max. radial force, Hollow shaft									
	$F_{rad,max}$	$F_{rad,max}$	$F_{rad,max}$	$F_{rad,max}$	$F_{rad,max}$	$F_{rad,max}$	$F_{rad,max}$	$F_{rad,max}$	$F_{rad,max}$	$F_{rad,max}$
	[N]	[N]	[N]	[N]	[N]	[N]	[N]	[N]	[N]	[N]
g500-B45	900	1200	2200	2500	2800	3000	3000	3000	3000	3000
g500-B110	1000	2200	2550	3000	3300	3600	3600	3600	3600	3600
g500-B240	1500	2250	3800	4500	5100	6200	7400	7800	7800	7800
g500-B450	3000	3800	5000	5200	5200	5500	7000	9000	9000	9000

	Max. radial force, Solid shaft without flange									
	$F_{rad,max}$	$F_{rad,max}$	$F_{rad,max}$	$F_{rad,max}$	$F_{rad,max}$	$F_{rad,max}$	$F_{rad,max}$	$F_{rad,max}$	$F_{rad,max}$	$F_{rad,max}$
	[N]	[N]	[N]	[N]	[N]	[N]	[N]	[N]	[N]	[N]
g500-B45	900	1200	1800	2100	2400	2800	3000	3000	3000	3000
g500-B110	1000	1800	2100	2500	2700	3000	3000	3000	3000	3000
g500-B240	1500	2350	3000	3600	4500	5000	6000	6500	6500	6500
g500-B450	1800	2800	3600	4200	5100	6000	7200	7800	7800	7800

	Max. radial force, Solid shaft with flange									
	$F_{rad,max}$	$F_{rad,max}$	$F_{rad,max}$	$F_{rad,max}$	$F_{rad,max}$	$F_{rad,max}$	$F_{rad,max}$	$F_{rad,max}$	$F_{rad,max}$	$F_{rad,max}$
	[N]	[N]	[N]	[N]	[N]	[N]	[N]	[N]	[N]	[N]
g500-B45	900	1200	1800	2100	2400	2800	3000	3000	3000	3000
g500-B110	1000	1800	2100	2500	2700	3000	3000	3000	3000	3000
g500-B240	2400	3600	5200	6000	6500	6500	6500	6500	6500	6500
g500-B450	3000	4000	5500	6200	7000	7500	7800	7800	7800	7800

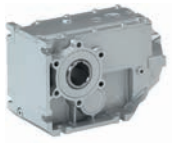

Moments of inertia

- The moments of inertia relate to the drive shaft of the gearbox.
- The total moment of inertia is calculated by adding the values of the gearbox, motor and accessories.

2-stage gearboxes

Product	Ratio	Moment of inertia
	i	J
		[kgcm²]
g500-B45	5.411	0.31
	6.222	0.28
	7.111	0.20
	8.178	0.18
	9.101	0.13
	10.466	0.12
	11.640	0.086
	13.386	0.079
	15.111	0.059
	17.378	0.055
	19.365	0.038
	22.270	0.054
	25.051	0.025
	28.808	0.023
	32.593	0.016
	37.481	0.015
	42.222	0.010
	48.556	0.009
	53.889	0.006
	61.972	0.006
g500-B110	5.185	0.79
	5.963	0.70
	7.111	0.48
	8.178	0.43
	9.101	0.32
	10.466	0.29
	11.449	0.26
	12.698	0.19
	14.603	0.18
	15.556	0.14
	17.889	0.13
	19.556	0.095
	22.489	0.088
	25.185	0.063
	28.963	0.060
	31.919	0.041
	36.707	0.039
	37.400	0.072
	40.000	0.028
	46.000	0.027
	48.167	0.050
	52.698	0.017
	60.603	0.016
	61.045	0.033
	76.500	0.023
	100.786	0.014

Product	Ratio	Moment of inertia
	i	J
		[kgcm²]
g500-B240	3.565	2.97
	4.889	1.74
	6.257	1.15
	6.883	1.67
	7.817	1.51
	9.440	1.05
	10.720	0.97
	12.081	0.73
	13.719	0.68
	15.008	0.59
	16.857	0.45
	19.143	0.42
	20.650	0.34
	23.450	0.32
	26.878	0.21
	30.522	0.20
	33.433	0.15
	37.967	0.15
	43.267	0.096
	49.133	0.092
	52.510	0.070
	59.630	0.067
	67.113	0.045
	76.213	0.043

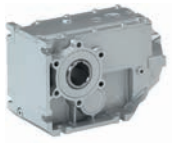

Moments of inertia

3-stage gearboxes

Product	Ratio	Moment of inertia
	i	J
		[kgcm²]
g500-B240	68.459	0.093
	77.741	0.091
	87.563	0.062
	99.437	0.061
	113.673	0.044
	129.087	0.043
	145.674	0.030
	165.426	0.030
	188.442	0.021
	213.994	0.020
	245.178	0.014
	278.422	0.014
	317.617	0.003
	360.683	0.003

Product	Ratio	Moment of inertia
	i	J
		[kgcm²]
g500-B450	5.002	4.36
	6.860	2.48
	9.315	3.21
	10.328	3.06
	12.775	1.87
	14.165	1.79
	16.349	1.23
	17.885	1.05
	19.831	1.01
	22.813	0.70
	25.294	0.68
	27.945	0.51
	30.985	0.49
	36.373	0.31
	40.330	0.30
	45.245	0.22
	50.167	0.21
	56.154	0.47
	62.262	0.47
	68.788	0.36
	76.271	0.36
	89.534	0.22
	99.274	0.22
	111.372	0.16
	123.487	0.16
	144.128	0.10
	159.807	0.099
	174.919	0.073
	193.948	0.072
	223.563	0.046
	247.882	0.046

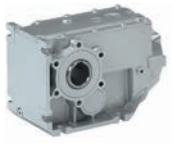

Additional weights for gearboxes

Product			g500-B45	g500-B110	g500-B240	g500-B450
Mass						
Solid shaft	m	[kg]	0.4	0.5	1.4	1.3
Shrink disc	m	[kg]	0.2	0.2	0.7	0.6
Flange	m	[kg]	0.3	0.4	0.7	0.9



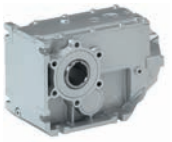

Torque plate

Torque support is usually effected by means of the foot or flange. Another simple possibility is provided by the attachable torque plates. Here, torque support is implemented solely via one point, which, among other things, is suitable for shaft-mounted gearboxes. Supplied rubber buffers provide for mounting with minimum stress and absorb light shocks.
The torque plates are available in two designs, for mounting on the available threaded pitch circle, or for the gearbox foot.

In addition, torque support for the g500-B45 gearbox can be effected via the holding fixture of the housing, which is integrated on both sides, by means of a rubber buffer.
The rubber buffers can be ordered optionally.



Torque plate

Torque plate on threaded pitch circle

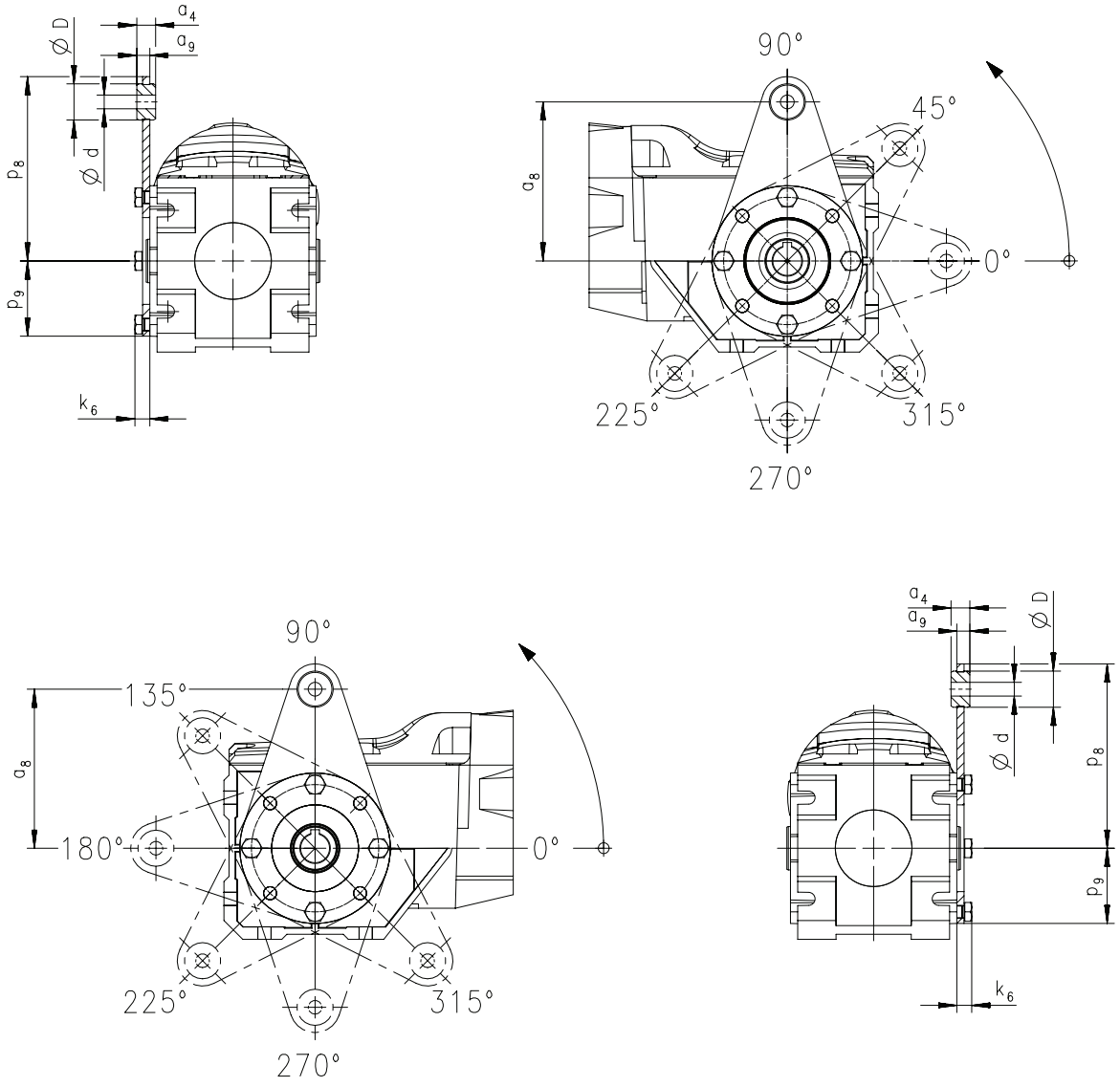

Product	Dimensions								Mass
	a_4	a_8	a_9	d	D	p_8	p_9	k_6	m
	[mm]	[mm]	[mm]	[mm]	[mm]	[mm]	[mm]	[mm]	[kg]
g500-B45	12.0	100	8.0	8.0	20.0	115	42.0	9.0	0.30
g500-B110	13.0	110	9.0	10.0	25.0	128	54.0	11.0	0.50



Torque plate

Torque plate on threaded pitch circle

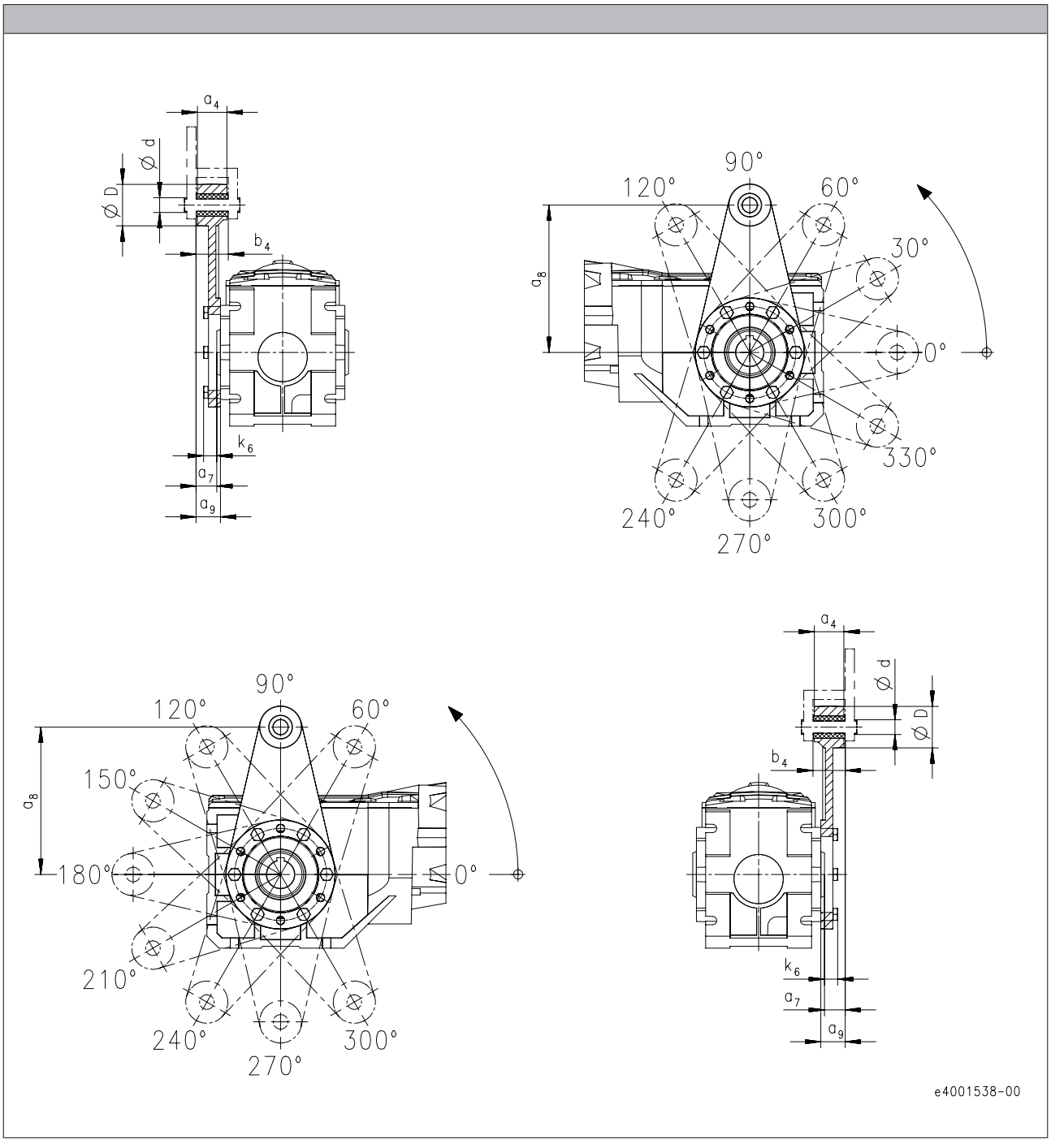

Product	Dimensions								Mass
	a_4	a_7	a_8	a_9	b_4	d	D	k_6	m
	[mm]	[mm]	[mm]	[mm]	[mm]	[mm]	[mm]	[mm]	[kg]
g500-B240	34.0	23.5	160	27.5	38.5	16.0	45.0	15.0	1.30



Torque plate

Torque plate at housing foot

g500-B240

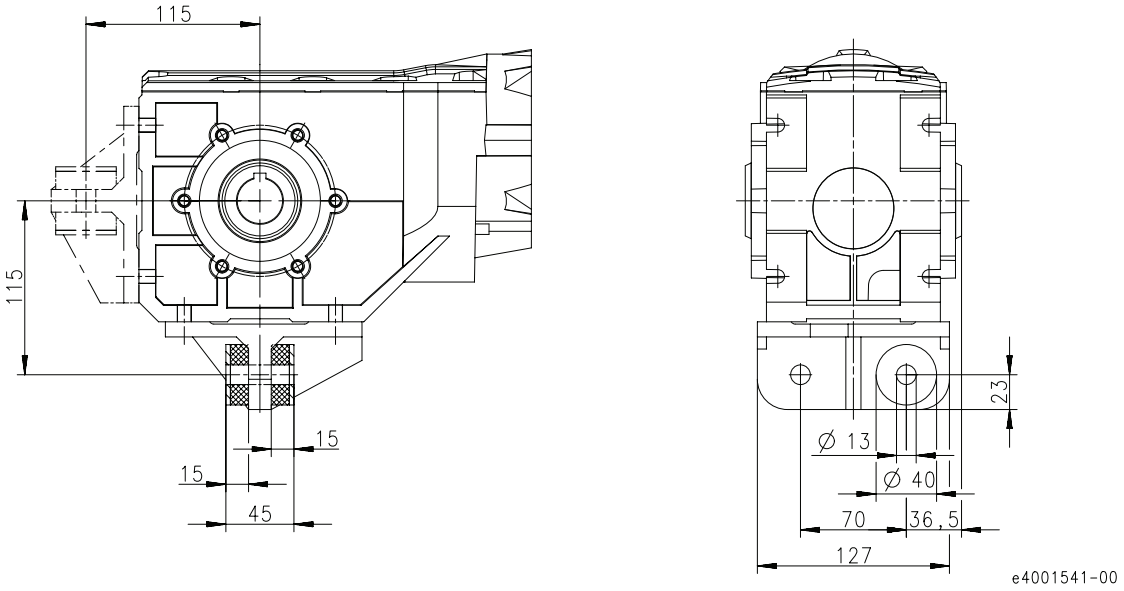

g500-B450

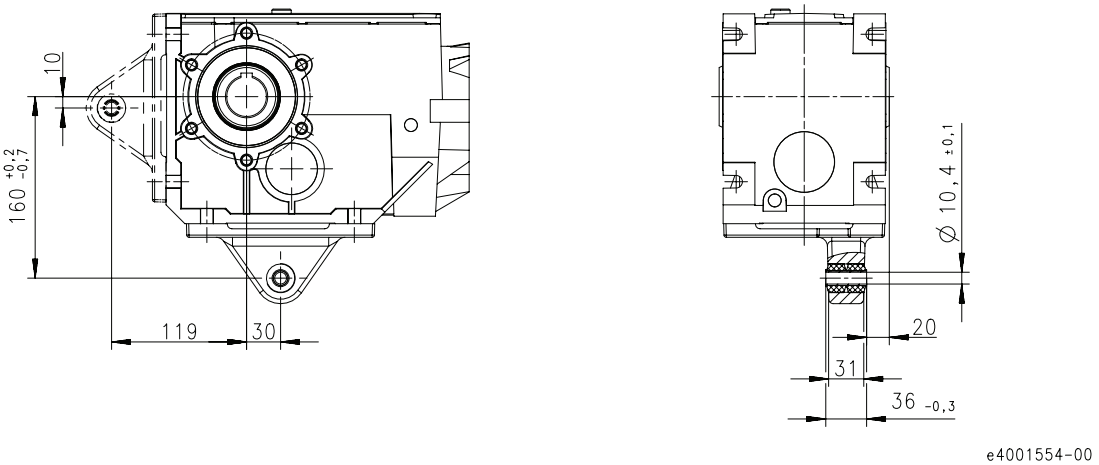

Product	Mass
	m
	[kg]
g500-B240	2.40
g500-B450	1.10

6.5.1



Torque plate

Rubber buffer for torque plate

g500-B45

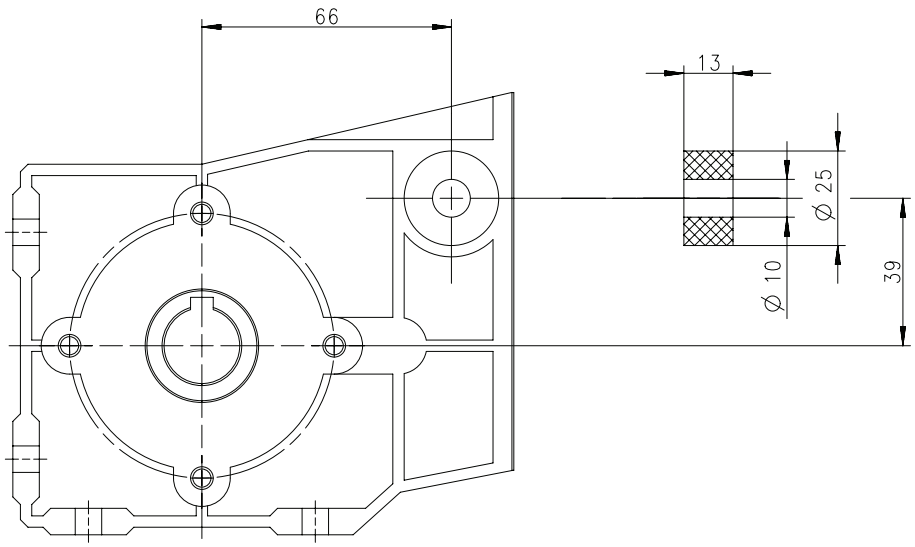



Shaft cover

Hoseproof hollow shaft cover

The cover protects the hollow shaft from objects falling in. It is sealed by a flat gasket between cover and housing. Thus, the hollow shaft is protected from dust and water jets.

The cover is loosely enclosed and can be mounted on both sides of the hollow shaft bore.

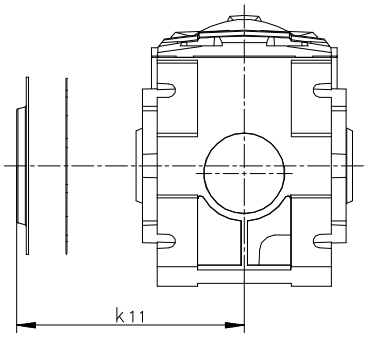

Product	Dimensions	Mass
	k_{11}	m
	[mm]	[kg]
g500-B45	55.0	0.050
g500-B110	65.0	0.050
g500-B240	75.0	0.10
g500-B450	79.5	0.15

6.5.1



Shaft cover

Shrink disc cover

The cover is provided for the shrink disc to be protected from contact.

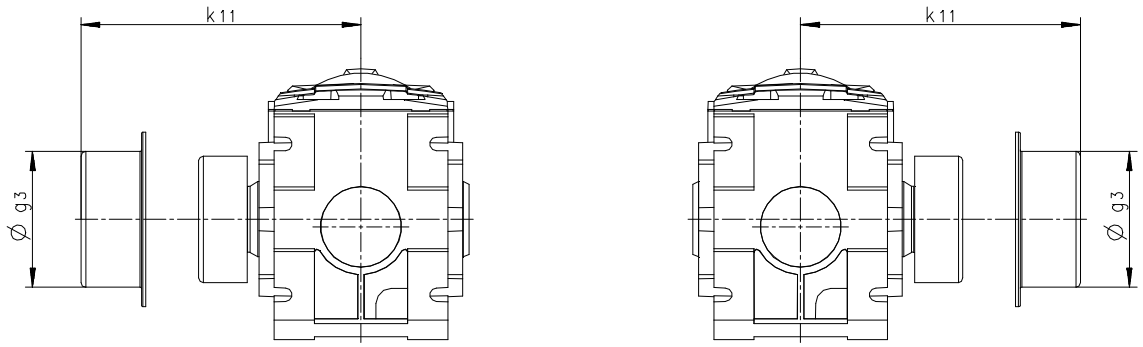

Product	Dimensions		Mass
	g_3	k_{11}	m
	[mm]	[mm]	[kg]
g500-B45	65.0	87.5	0.050
g500-B110	79.0	97.5	0.050
g500-B240	90.0	111	0.050
g500-B450	90.0	108	0.050



Lenze Smart Motor m300

1.75 and 5.0 Nm



Lenze Smart Motor m300



Contents

General information	List of abbreviations	6.6 - 4
	Product key	6.6 - 5
	Product information	6.6 - 6
	Equipment	6.6 - 7
	Easy setting	6.6 - 8
	Smooth, soft starts and stops	6.6 - 9
	Installation topologies	6.6 - 10
	Functions and features	6.6 - 11
Technical data	Standards and operating conditions	6.6 - 13
	Rated data	6.6 - 14
	Permissible radial and axial forces	6.6 - 15
	Dimensions	6.6 - 16
	Surface and corrosion protection	6.6 - 22
Accessories	Motor connection	6.6 - 23
	Connections via plug connectors	6.6 - 24
	Connections via cable glands	6.6 - 24
	Spring-applied brake	6.6 - 25
	Brake resistors	6.6 - 29
	NFC adapter	6.6 - 30
	Nuts for QUICKON connection	6.6 - 30
	Easy setting	6.6 - 31



List of abbreviations

$\eta_{100\,\%}$	[%]	Efficiency
$\eta_{75\,\%}$	[%]	Efficiency
$\eta_{50\,\%}$	[%]	Efficiency
cos ϕ		Power factor
I_N	[A]	Rated current
I_{max}	[A]	Max. current consumption
J	[kgcm²]	Moment of inertia
m	[kg]	Mass
M_a	[Nm]	Starting torque
M_b	[Nm]	Stalling torque
M_{max}	[Nm]	Max. torque
M_N	[Nm]	Rated torque
n_N	[r/min]	Rated speed
P_N	[kW]	Rated power
P_{max}	[kW]	Max. power input

U_{max}	[V]	Max. mains voltage
U_{min}	[V]	Min. mains voltage
$U_{N,\Delta}$	[V]	Rated voltage
$U_{N,Y}$	[V]	Rated voltage

CE	Communauté Européenne
CSA	Canadian Standards Association
DIN	Deutsches Institut für Normung e.V.
EMC	Electromagnetic compatibility
EN	European standard
IEC	International Electrotechnical Commission
IM	International Mounting Code
IP	International Protection Code
NEMA	National Electrical Manufacturers Association
UL	Underwriters Laboratory Listed Product
UR	Underwriters Laboratory Recognized Product
VDE	Verband deutscher Elektrotechniker (Association of German Electrical Engineers)
CCC	China Compulsory Certificate
EAC	Customs union Russia / Belarus / Kazakhstan certificate
cURus	Combined certification marks of UL for the USA and Canada
UkrSEPRO	Certificate for Ukraine



Product key

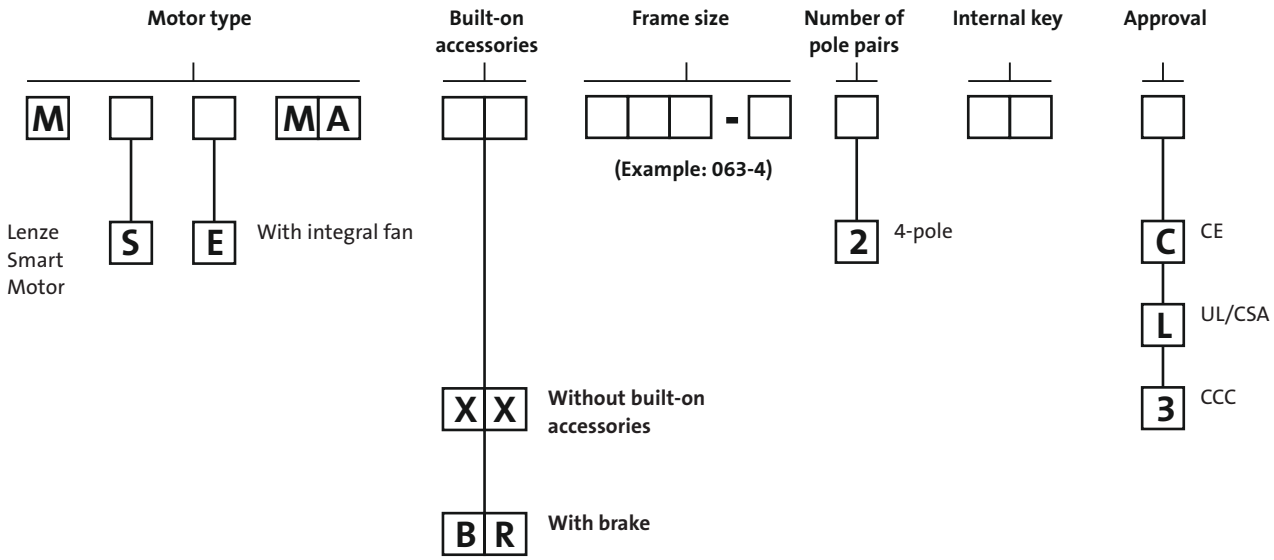
Motor type
Built-on accessories
Frame size
Number of pole pairs
Internal key
Approval
M
M A
-
(Example: 063-4)
Lenze Smart Motor
S
E
With integral fan
2
4-pole
C
CE
L
UL/CSA
3
CCC
X X
Without built-on accessories
B R
With brake



Product information

New freedom in motion for engineers.
The Lenze Smart Motor reduces the number of different drive versions by up to 70%. Without contactor or starter, fixed speeds can be set at will and there are many integrated functions for materials handling applications. The Lenze Smart Motor also meets the strictest energy efficiency requirements and can be operated very conveniently using a smartphone.

Highlights

- Freely adjustable speed reduces the number of different versions
- Integrated soft-start functionality
- Less wiring thanks to electronic contactor and motor protection function
- Exceptional energy efficiency
- Can be operated with an NFC-capable smartphone using the Lenze app
- Optional brake control for low-wear brake control

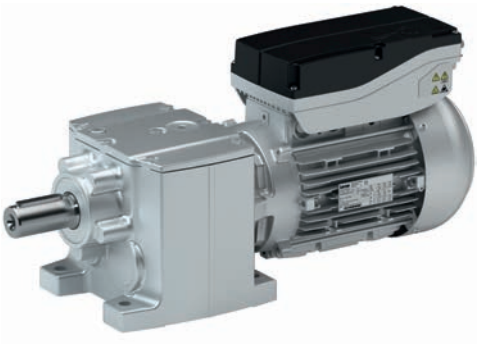

g500 helical gearbox with Lenze Smart Motor

Reducing the number of different drive versions with ease

In the past, different output speeds (e.g. for various conveyor speeds) were achieved through use of different gearbox ratios or, in the case of extreme differences, via the number of pole pairs in the motors. This led to a large number of different motors being required.
The Lenze Smart Motor has completely changed this. Thanks to the ability to freely adjust the motor speed in a range from 500 to 2,600 rpm, various speeds can now be handled safely and reliably using just a single motor. This significantly reduces the time and costs associated with dimensioning, selecting specific units, procurement and warehousing.

MSEMA□□063-42

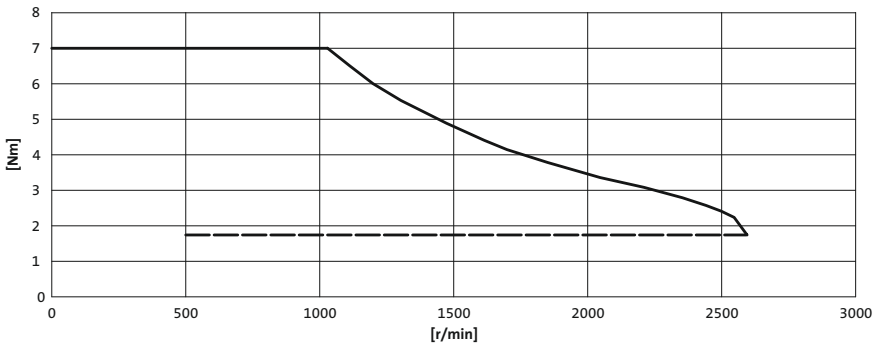

MSEMA□□080-32

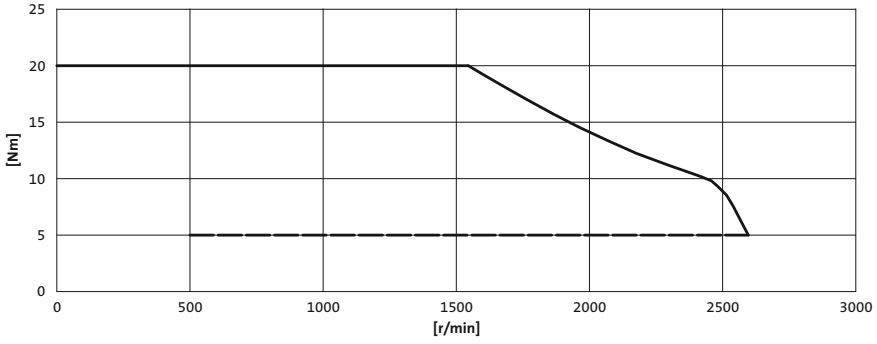

——— Max. torque — — — rated torque



Equipment

The equipment includes all the options available as standard and all the built-on accessories of the product.

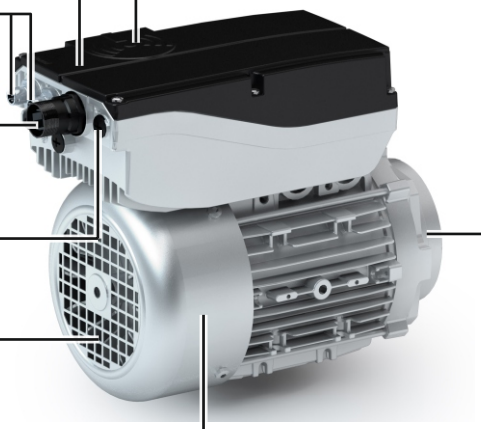

Internal brake resistor

Speed setting
via smartphone
via PC using the NFC adapter

Control connection
M12 connector

Motor connection
In the terminal box or via
QUICKON connector

Connection
External brake resistor

Cooling
Integral fan

Spring-applied brake
Standard
LongLife
Manual release lever

Design
Foot (B3)
Flange (B5) with through holes
Flange (B14) with threaded holes
Geared motor with g500 gearboxes



Easy setting

Adapting the Lenze Smart Motor to the application and performing diagnostics both take place using NFC (near field communication) technology. The drive can be set up quickly and easily without opening the terminal box, without voltage supply and without complex addressing.
The only tool that is required for this is an NFC-capable Android smartphone or the Lenze NFC Adapter for PCs. The data can then be read and written while the system is deenergised – of course including password protection.



Setting via smartphone

Data that can be set:
- Data record name
  (e.g. the designation of the drive in your documentation)
- Speed and direction of rotation 1 (can also be controlled without digital inputs)
- Speed and direction of rotation 2-5 (can be controlled using digital inputs)
- Acceleration time
- Deceleration time
- Energy saving function

Data that can be read:
- Identification data
  (Lenze material and serial number, type designation, software version)
- Error messages
- Operating and activation hours

Setting via smartphone

The Lenze Smart Motor can be set up using an Android smartphone. The corresponding app (available in both German and English) can be ordered via www.Lenze.com or downloaded via the Google Store. The data records created are also easy to archive on the smartphone, from where they can then be reloaded to the Lenze Smart Motor for repeat applications.

Setting via PC

The Lenze Smart Motor can be set up using the EASY Starter engineering tool (extended version, software licence "EASY Advanced" or "Engineer HighLevel" required). The software can easily be downloaded via www.Lenze.com. Since the settings are very easy and clearly structured, the Lenze Smart Motor also uses a basic dialog that can be called up directly via the navigator. The corresponding button is located directly in the navigation bar. Just like other product settings, the parameter values can be archived here.



Smooth, soft starts and stops

An acceleration ramp and - in contrast with conventional starters - a deceleration ramp can also be set on the Lenze Smart Motor. This guarantees defined, jerk-free handling of the material being transported.

Contactor and motor protection functionality integrated

The Lenze Smart Motor can be started and stopped using digital inputs. It is also possible to switch between different speeds and directions of rotation. Up to 5 different speeds (e.g. creep speed and standard speed in both directions, as well as stop) can therefore be handled with just a single motor. Reversing contactor and pole switchovers are then a thing of the past.
In addition to this, external motor protection devices are no longer required, as temperature, short circuit, earth fault and phase fault monitors are all already integrated.

Worldwide and efficient

The Lenze Smart Motor already complies with the strictest energy efficiency requirements of the future. Many conveyor systems require a high level of starting torque, but only a low level of continuous torque. With its 4-fold overload capacity, the Lenze Smart Motor is the ideal solution here. If very little torque is required in the partial load operational range, the integrated energy saving function is automatically activated and then optimises energy consumption.
The drive can be used worldwide in all three-phase mains systems with 400 up to 480 V supply voltage and 50 up to 60 Hz.

Easy installation

Alongside the power connection directly in the terminal box, the Lenze Smart Motor offers a particularly intelligent connection technology as an option – Phoenix Contact QUICKON. This allows the electrical installation to be completed in under a minute without the need for any special tools.
The digital inputs and outputs are connected to standard commercial M12 sockets by default.
As such, already existing signal cables can still be used in many cases.



The m300 Lenze Smart Motor in the field of horizontal materials handling



Installation topologies

Full flexibility – Simply go with the system of your choice:

Energy distribution

Almost any standard commercial energy distribution system can be used with the stub on the Lenze Smart Motor.

Fieldbus connection

Apart from direct connection of the Lenze Smart Motor's digital inputs and outputs to a PLC, the control signals can be connected to virtually any fieldbus using standard commercial decentralised I/O modules. The sensor signals of your conveyor line can also be integrated into the fieldbus in this way.

Topology - centrally controlled via controllers

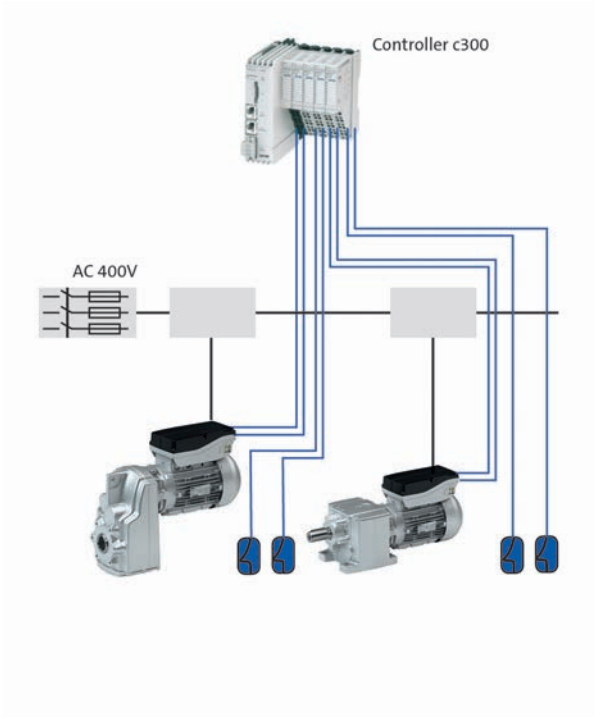

Topology - decentrally controlled using field distributors

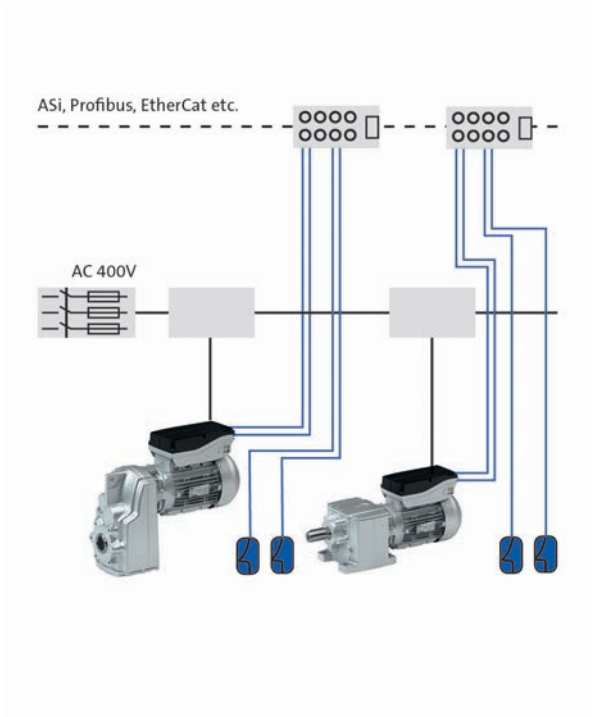



Functions and features

Size			
Motor		063	080
Design			
		B3 B5 B14 Direct gearbox attachment	
Shaft journal			
d x l	[mm]	11 x 23	19 x 40
Spring-applied brake			
Design		Standard or LongLife design With manual release lever	
Monitoring and protective measures			
		Short circuit (limited), error acknowledgement is required Earth fault (limited), error acknowledgement is required Overvoltage Overcurrent Motor overtemperature Mains phase failure Protection for cyclical mains switching Motor stalling	
Motor connection			
Power connection		Terminal box QUICKON-connector	
Control connection		M12 connector	
Shaft bearings			
Position of the locating bearing		Standard motors (B3, B5, B14): side B Motors for gearbox direct mounting: side A	
Bearing type		Deep-groove ball bearing with high-temperature resistant grease, 2 sealing discs or cover plates	
Colour			
		Not coated Primed Paint in various corrosion-protection designs in accordance with RAL colours	
Further options			
		Brake resistor	





Standards and operating conditions

Mode			
Product			Lenze Smart Motor m300
Conformity			
CE			Low-Voltage Directive
			2006/95/EC
EAC			TP TC 004/2011 (TR CU 004/2011) TP TC 020/2011 (TR CU 020/2011)
Approval			
CCC			GB Standard 12350-2009
UL/CSA			CSA 22.2 No. 14 UL 61800-5-1 Industrial Control Equipment, Lenze File No. E132659
Degree of protection			
EN 60529			IP55 [1]
Climatic conditions			
Storage (EN 60721-3-1)			1K3 (temperature: -20 °C ... +60 °C)
Transport (EN 60721-3-2)			2K3 (temperature: -20 °C ... +70 °C)
Operation (EN 60721-3-3)			NaN Attribut 1662 has no Data 3K3 (temperature: -30 °C ... -10 °C) for deep-freeze applications 3K3 (temperature : -10 °C ... +40 °C)
Site altitude			
Amsl	H_{max}	[m]	4000
Current derating at over 1000 m		[%/1000 m]	5.00
Vibration resistance			
Transport (EN 60721-3-2)			2M2
Operation (EN 60721-3-3)			3M4
Vibrational severity			
IEC/EN 60034-14			A

Mode	
Product	Lenze Smart Motor m300
Supply form	
	Systems with earthed star point (TN and TT systems)
Noise immunity	
EN 61800-3	Category C2
Insulation resistance	
EN 61800-5-1	Overvoltage category III Above 2000 m amsl overvoltage category II
Degree of pollution	
EN 61800-5-1	2
Protective insulation of control circuits	
EN 61800-5-1	Safe mains isolation: double/reinforced insulation for digital inputs and outputs
Operation on public supply systems	
EN 61000-3-2/EN 61000-3-12	The devices are designed for the use in industrial environments. If they are used on public systems, measures to reduce the expected emission of radio interferences are to be implemented. The machine/system manufacturer is responsible for compliance with the requirements for the machine/system!

[1] Types with deviating degrees of protection:
IP55 with brake (IP54 with manual release lever)



Rated data

				
Product key				
			MSEMA□□063-42	MSEMA□□080-32
Rated torque				
	M_N	[Nm]	1.75	5.00
Starting torque				
	M_a	[Nm]	7.00	20.0
Setting range				
	n_1	[r/min]	-2600 ... -500 / 0 / 500 ... 2600	
Rated current				
	I_N	[A]	1.00 [1] 0.80 [2]	2.80 [1] 2.30 [2]
Rated power				
	P_N	[kW]	0.47	1.36
Power factor				
	cos ϕ		0.99	
Efficiency				
Partial load	$\eta_{75\,\%}$	[%]	65.0	73.0
Full load	$\eta_{100\,\%}$	[%]	66.0	74.0
Moment of inertia				
	J	[kgcm²]		
Mass				
	m	[kg]	5.90	12.5
Mains voltage				
	U_{AC}	[V]	3 AC 400 ... 480	

[1] 400 V
[2] 480 V



Permissible radial and axial forces

► Forces at medium speed 2000 r/min.

Application of forces

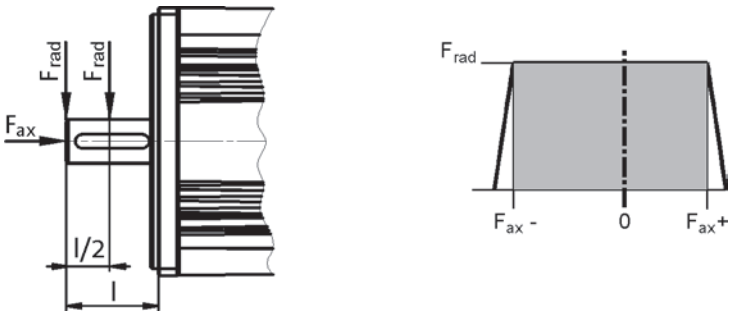

Application of force at l/2

Bearing service life L_{10}												
	10000 h			20000 h			30000 h			50000 h		
	F_{rad}	$F_{ax,-}$	$F_{ax,+}$	F_{rad}	$F_{ax,-}$	$F_{ax,+}$	F_{rad}	$F_{ax,-}$	$F_{ax,+}$	F_{rad}	$F_{ax,-}$	$F_{ax,+}$
	[N]	[N]	[N]	[N]	[N]	[N]	[N]	[N]	[N]	[N]	[N]	[N]
063	600	-600	300	470	-480	180	410	-430	120	350	-370	70
080	960	-1090	580	770	-860	350	670	-760	250	570	-650	140

Application of force at l

Bearing service life L_{10}												
	10000 h			20000 h			30000 h			50000 h		
	F_{rad}	$F_{ax,-}$	$F_{ax,+}$	F_{rad}	$F_{ax,-}$	$F_{ax,+}$	F_{rad}	$F_{ax,-}$	$F_{ax,+}$	F_{rad}	$F_{ax,-}$	$F_{ax,+}$
	[N]	[N]	[N]	[N]	[N]	[N]	[N]	[N]	[N]	[N]	[N]	[N]
063	400	-600	300	370	-480	180	320	-430	120	300	-370	70
080	880	-1090	580	700	-860	350	610	-760	250	520	-650	140

► The values for the bearing service life L_{10} refer to an average speed of 2000 r/min. Depending on the ambient temperatures, the service life of the bearings is also reduced by the grease lifetime.
► Data for axial forces relate to the maximum radial force with the corresponding bearing service life.



Dimensions

MSEMA□□063-42

Design B3

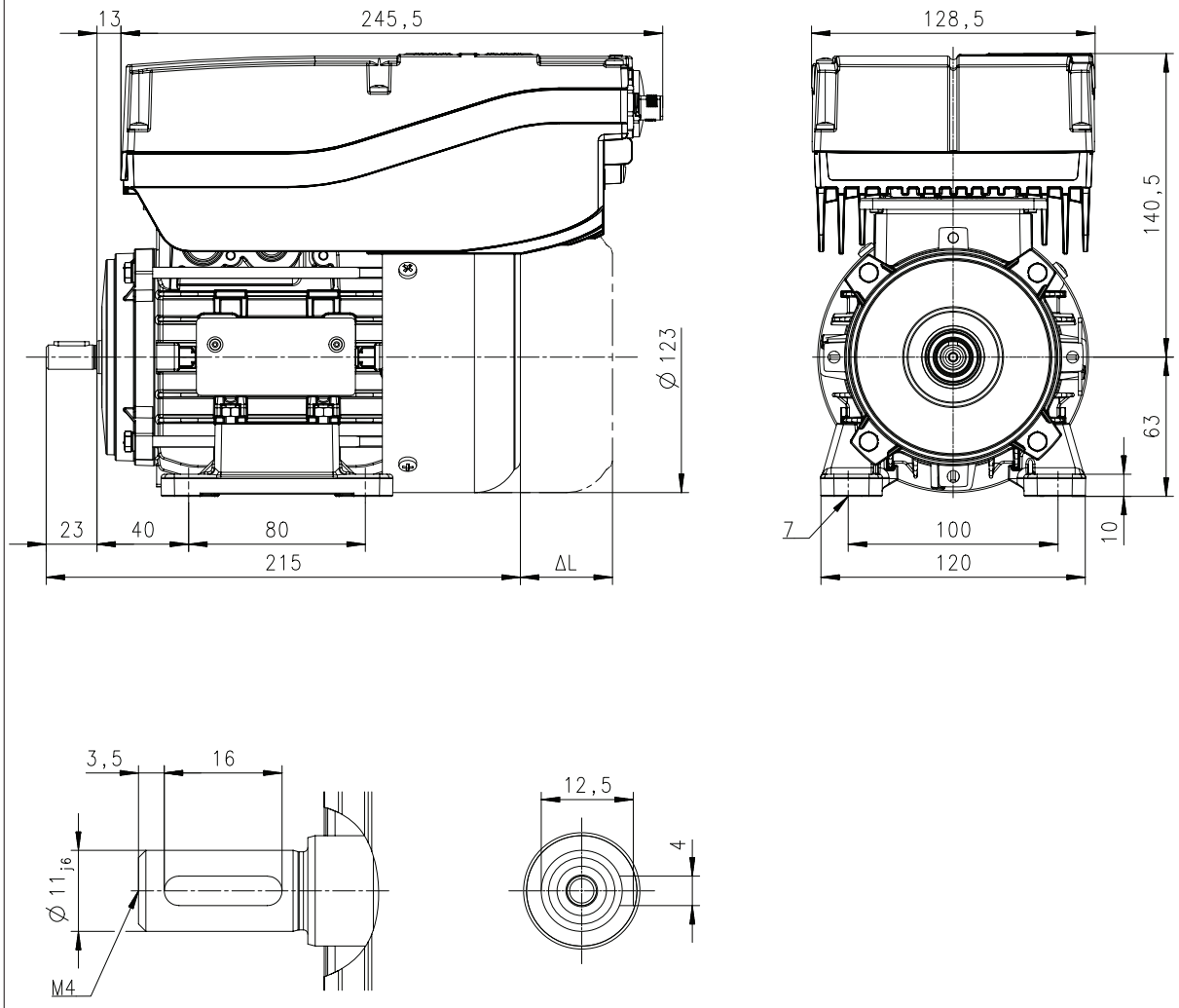

Motor type			
			MSEMABR

Dimensions			
Length of motor options	Δ L	[mm]	40.0



Dimensions

MSEMA□□063-42

Design B5

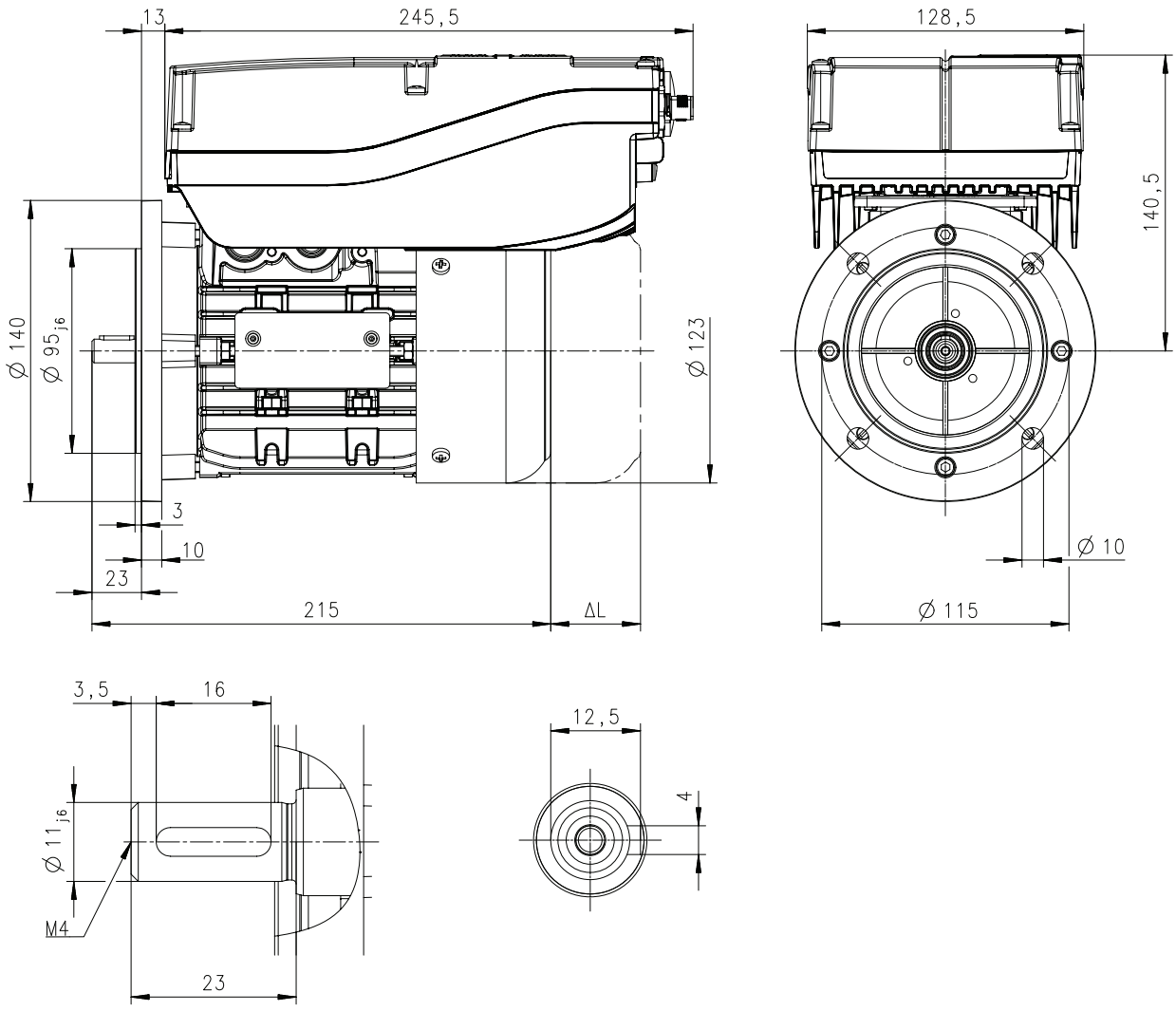

Motor type			
			MSEMABR

Dimensions			
Length of motor options	Δ L	[mm]	40.0



Dimensions

MSEMA□□063-42

Design B14

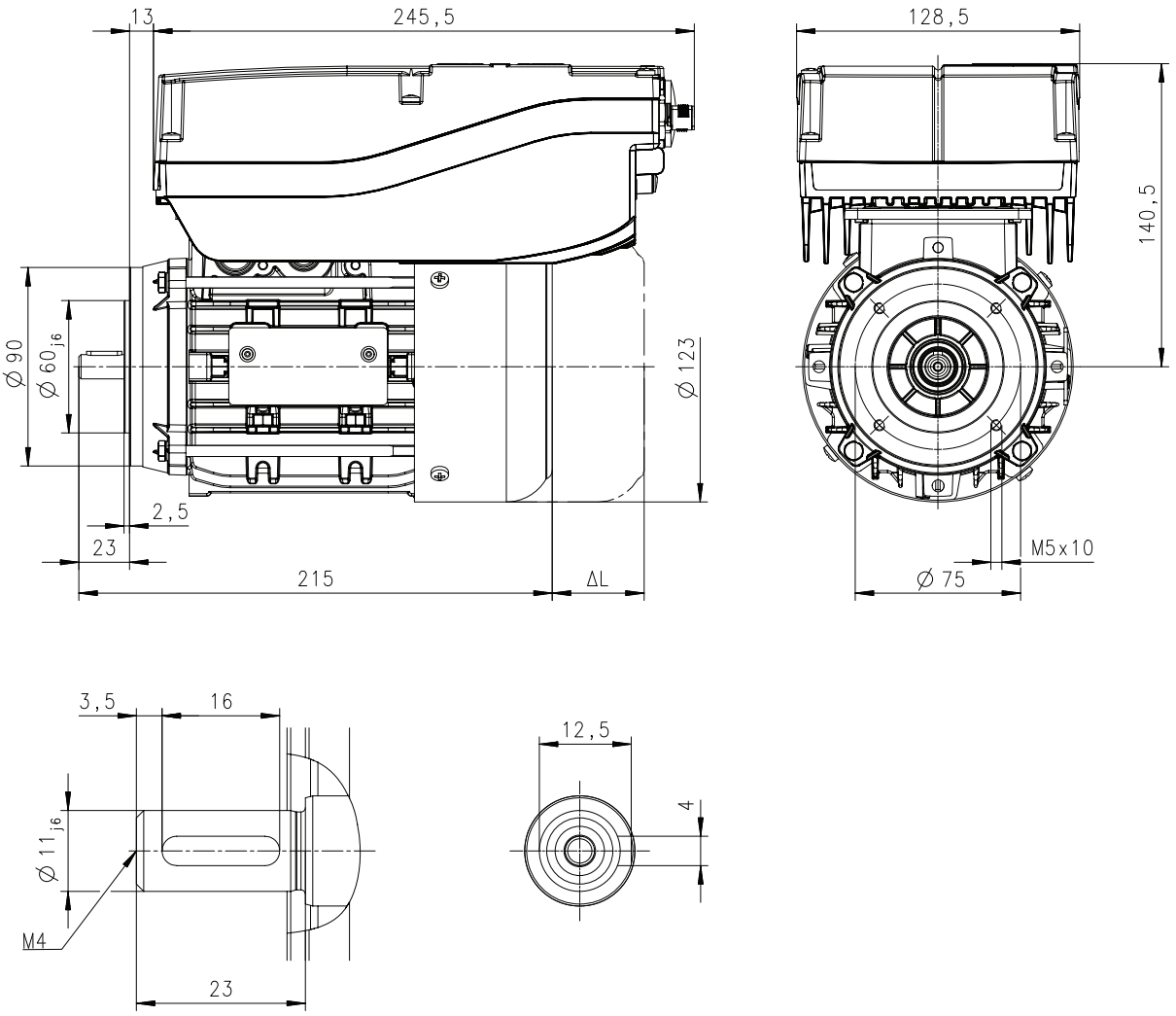

Motor type	
	MSEMABR

Dimensions			
Length of motor options	Δ L	[mm]	40.0



Dimensions

MSEMA□□080-32

Design B3

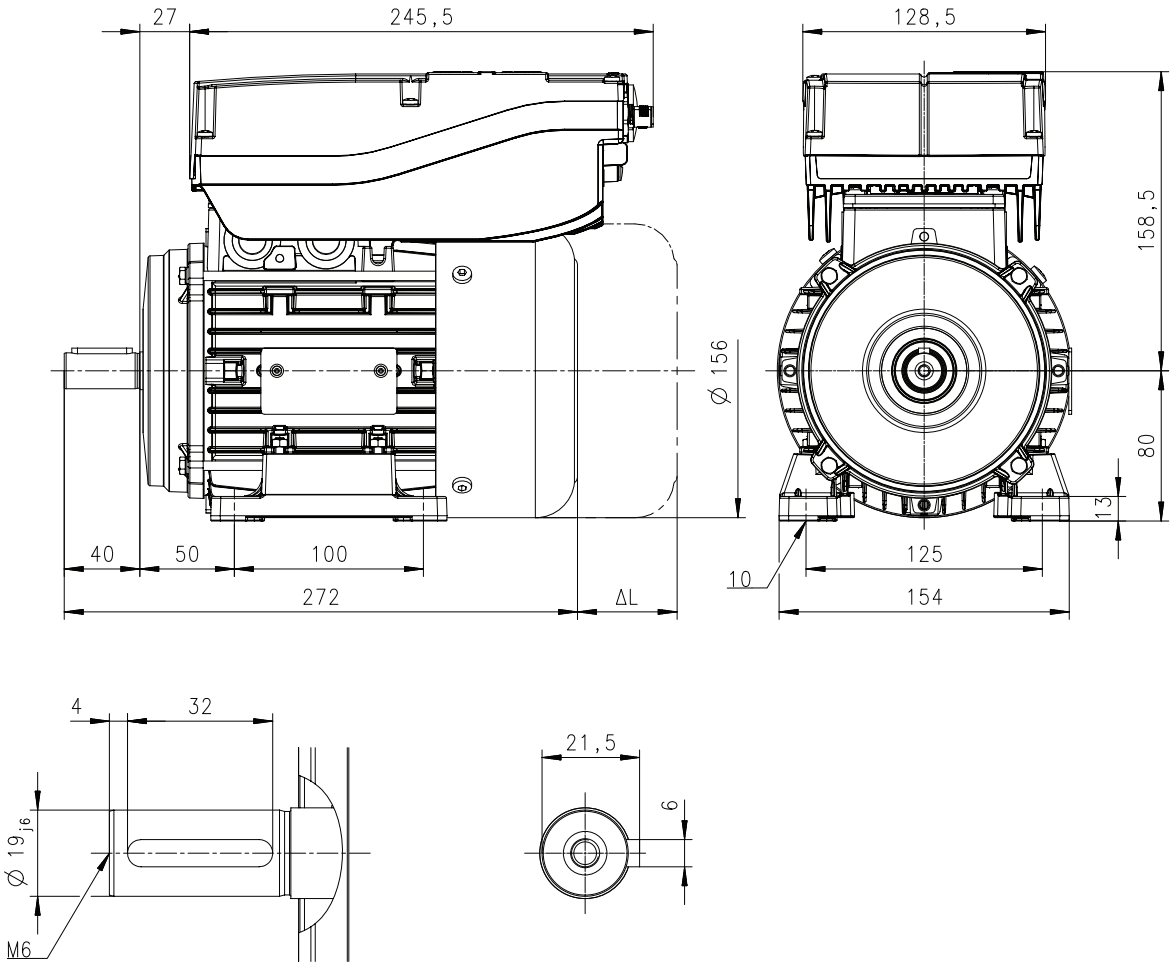

Motor type			MSEMABR
Dimensions			
Length of motor options	Δ L	[mm]	73.0



Dimensions

MSEMA□□080-32

Design B5

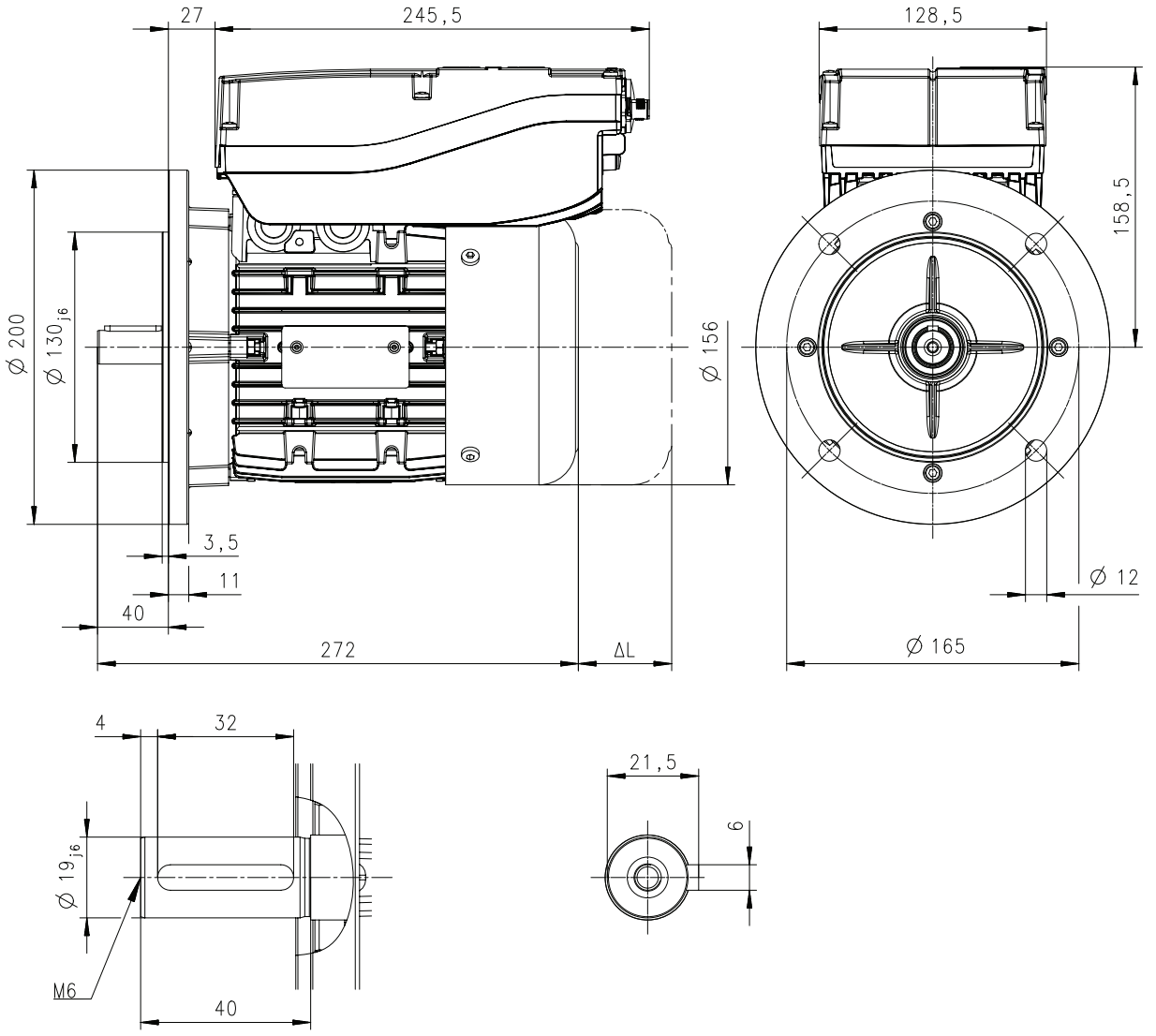

Motor type			MSEMABR
Dimensions			
Length of motor options	Δ L	[mm]	73.0

6.6



Dimensions

MSEMA□□080-32

Design B14

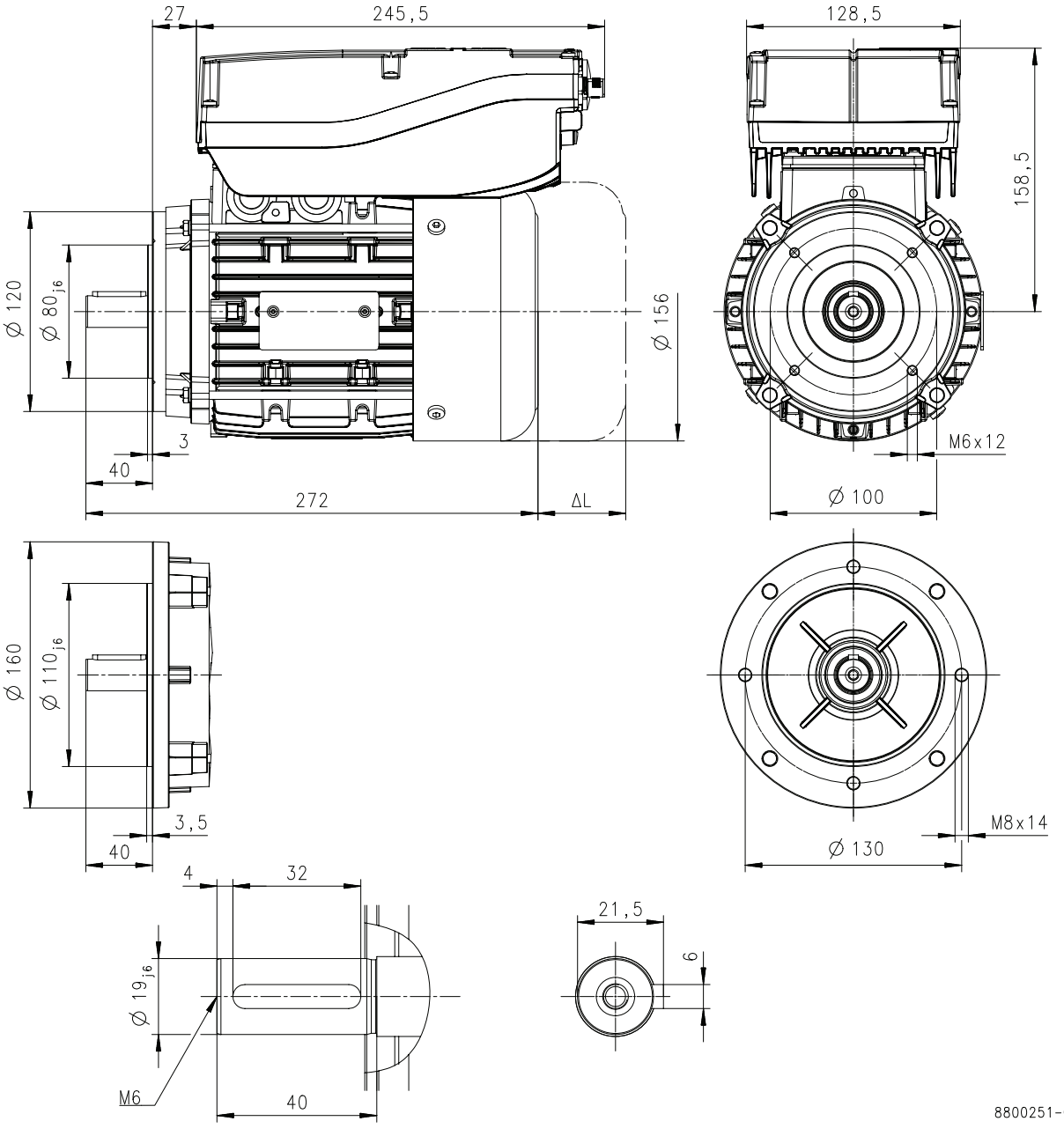

Motor type			
			MSEMABR

Dimensions			
Length of motor options	Δ L	[mm]	73.0

6.6



Surface and corrosion protection

For optimum protection of three-phase AC motors against ambient conditions, the surface and corrosion protection system (OKS) offers tailor-made solutions.

Various surface coatings ensure that the motors operate reliably even at high air humidity, in outdoor installation or in the presence of atmospheric impurities. Any colour from the RAL Classic collection can be chosen for the top coat. The three-phase AC motors are also available unpainted (no surface and corrosion protection).

Surface and corrosion protection system	Applications	Measures
OKS-G (primed)	• Dependent on subsequent top coat applied	• 2K PUR priming coat (grey)
OKS-S (small)	• Standard applications • Internal installation in heated buildings • Air humidity up to 90%	• Surface coating corresponding to corrosivity category C1 (subject to EN 12944-2)
OKS-M (medium)	• Internal installation in non-heated buildings • Covered, protected external installation • Air humidity up to 95%	• Surface coating corresponding to corrosivity category C2 (subject to EN 12944-2)
OKS-L (high) OKS-XL (extra Large)	• External installation • Air humidity above 95% • Chemical industry plants • Food industry	• Surface coating corresponding to corrosivity category C3 (subject to EN 12944-2) • Blower cover and B end shield additionally primed • Screws zinc-coated • Cable glands with gaskets • Corrosion-resistant brake with cover ring, stainless friction plate, and chrome-plated armature plate (on request) Optional measures: • Motor recesses sealed off (on request)

Structure of surface coating

Surface and corrosion protection system	Corrosivity category	Surface coating	Colour
	DIN EN ISO 12944-2	Structure	
Without OKS (uncoated)			
OKS-G (primed)		2K PUR priming coat	
OKS-S (small)	Comparable to C1	2K-PUR top coat	Standard: RAL 7012 Optional: RAL Classic
OKS-M (medium)	Comparable to C2	2K PUR priming coat 2K-PUR top coat	
OKS-L (high) OKS-XL (extra Large)	Comparable to C3		



Motor connection

Lenze Smart Motor control connection and power connection

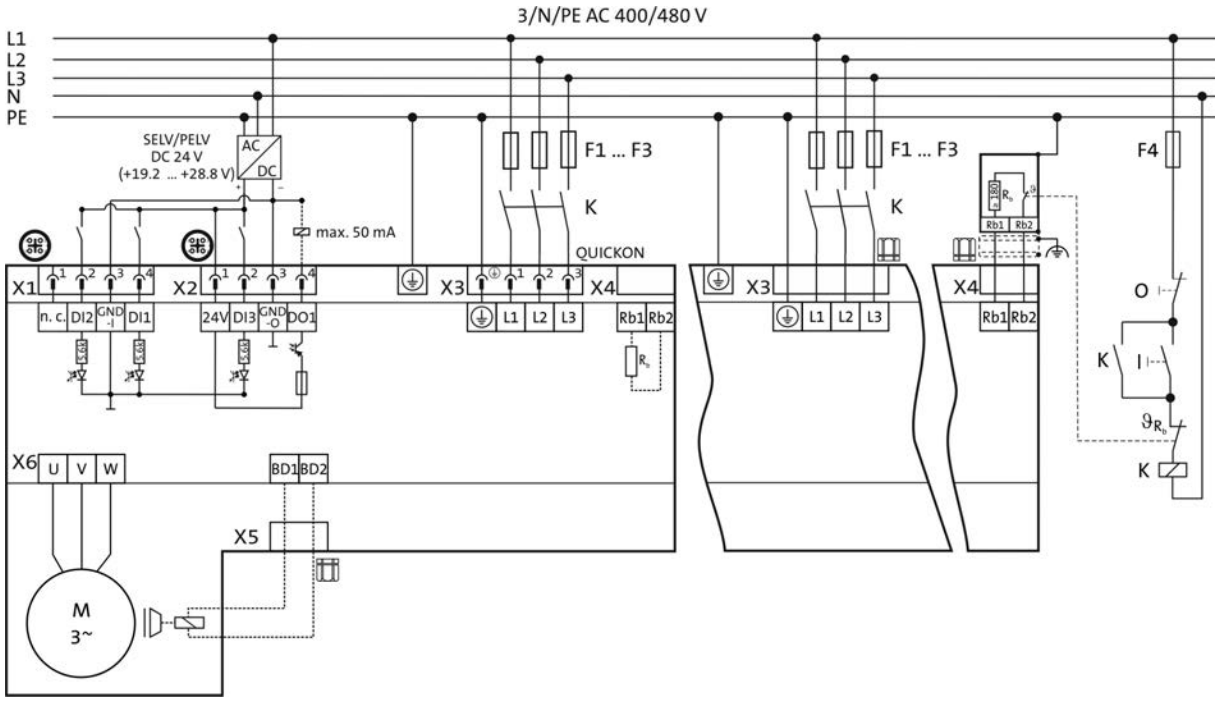

Terminal box

The Lenze Smart Motor can be connected via basic plug connectors (QUICKON for power connection, M12 for control connections). The power connection can alternatively be established in the terminal box via screw connections using cable glands. The connections have been kept easily accessible from the fan side.

Top view of Lenze Smart Motor with plug connections





Connections via plug connectors

QUICKON plug-in connectors are used for the power connection. These plug-in connectors enable quick and clean connection of the motors. The system as a whole is easy to cable by means of a connecting cable with QUICKON nuts. The different QUICKON nuts are available as accessories.

It is possible to change over between different speeds and directions of rotation by means of the digital inputs of the two M12 control terminals. Up to 5 different speed states (e.g. creep speed and normal speed in both directions as well as Stop) can therefore be chosen. In addition, the operating state is reported via a digital output. These terminals are taken out via two M12 connectors.

Power connection X3 with QUICKON connector

Pin assignment			
Contact	Designation	Meaning	
1	L1	Mains connection phase L1	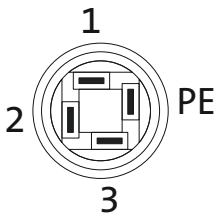
2	L2	Mains connection phase L2	
3	L3	Mains connection phase L3	
4	PE	PE conductor	

Control connection X1 with M12-connector A–coded, pins

Pin assignment			
Contact	Designation	Meaning	
1	n.c.		
2	DI2	Digital input 1	
3	GND-I	Digital input ground	
4	DI1	Digital input 2	

Control connection X2 with M12-connector A–coded, pins

Pin assignment			
Contact	Designation	Meaning	
1	24 V	24 V supply (DO1 supply)	
2	DI3	Digital input 3 (reference X1;3 = GND-I)	
3	GND-O	Digital output ground	
4	DO1	Digital output 1	

6.6

Connections via cable glands

Cable glands are provided for the connections. The connections themselves are then accessible in the terminal box. The following screwed connections are available: :

- M25x1,5 mm ^{2} for the mains cable
- M25x2,5 mm ^{2} for the mains cable with pin-end connector
- M12x1,5 mm ^{2} for the ext. brake resistor



Spring-applied brake

The Lenze Smart Motors can be equipped with a spring-applied brake. This is activated after the supply voltage is shut down (closed-circuit principle). For applications with very high switching rates, a LongLife version of the brake with strengthened braking mechanics is available.

Features

Versions
- **Standard**
  - 1 x 10^6 repeating switching cycles
  - 1 x 10^6 reversing switching cycles
- **LongLife**
  - 10 x 10^6 repeating switching cycles
  - 15 x 10^6 reversing switching cycles

Control
- Via internal electronics
- Holding brake, active when deenergised

Degree of protection
- IP55 without manual release
- IP54 with manual release

Friction lining
- Asbestos-free, low-wear

Options
- Manual release

Assignment of 4-pole motors and brakes

Design	Standard		LongLife	
Motor frame size	**Size**	**Rated torque**	**Size**	**Rated torque**
	Brake		Brake	
		M_k		M_k
		[Nm]		[Nm]
063-42	06	4.00	06	4.00
080-32	08	8.00	08	8.00



Spring-applied brake

Permissible friction energy

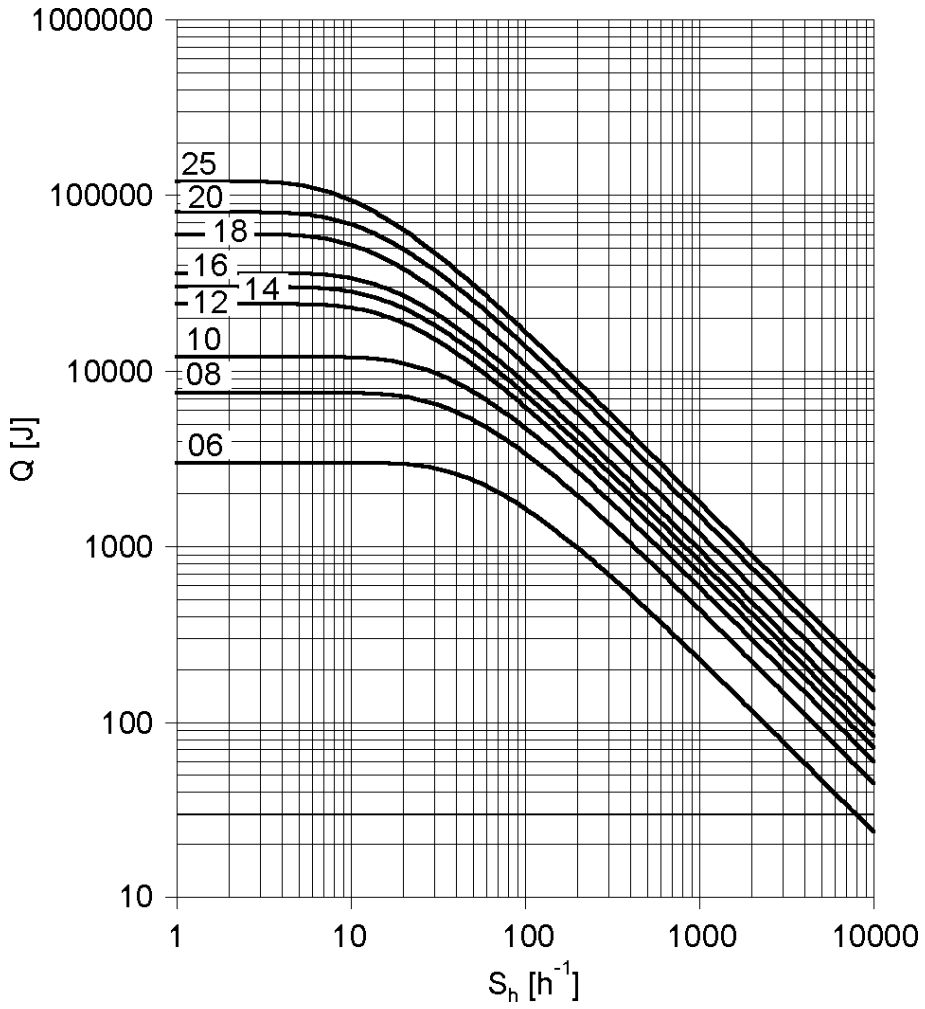

Q =Switching energy per switching cycle
S_h =Operating frequency
Brake size = 06 to 25



Spring-applied brake

Rated data with standard braking torque

Size			06	08
Power input				
	P_{in}	[kW]	0.020	0.025
Braking torque				
100	M_B	[Nm]	4.00	8.00
1000	M_B	[Nm]	3.70	7.20
1200	M_B	[Nm]	3.60	7.00
1500	M_B	[Nm]	3.50	6.80
1800	M_B	[Nm]	3.40	6.70
2600	M_B	[Nm]	3.20	6.30
Maximum switching energy				
100	Q_E	[KJ]	3.00	7.50
1000	Q_E	[KJ]	3.00	7.50
1200	Q_E	[KJ]	3.00	7.50
1500	Q_E	[KJ]	3.00	7.50
1800	Q_E	[KJ]	3.00	7.50
2600	Q_E	[KJ]	3.00	7.50
Transition operating frequency				
	$S_{hü}$	[1/h]	79.0	50.0
Moment of inertia				
	J	[kgcm²]	0.015	0.061
Mass				
	m	[kg]	0.90	1.50



Spring-applied brake

Manual release lever

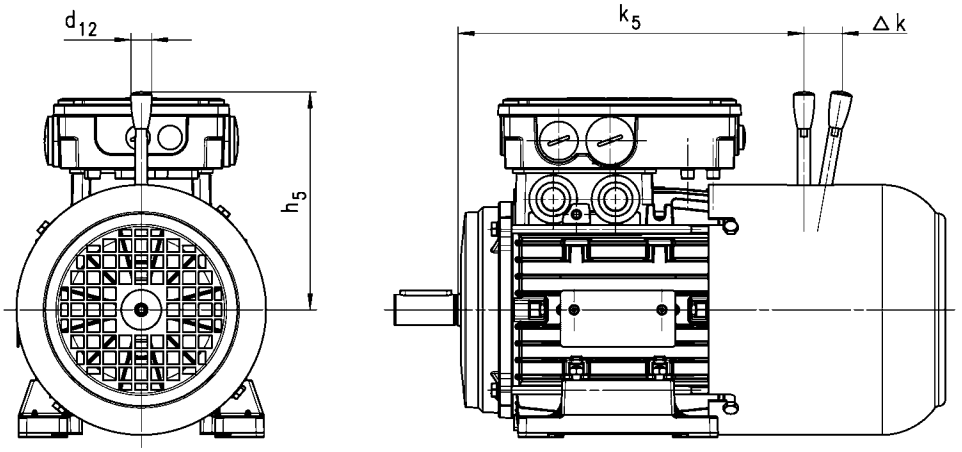

	Brake				
		k_5	Δ k	h_5	d_{12}
		[mm]	[mm]	[mm]	[mm]
063	06	178	29	107	13.0
080	08	224	27	116	13.0

► Not possible for manual release lever and terminal box to be in same position!



Brake resistors

The Lenze Smart Motor can be braked using ramp guidance. If a large amount of regenerative energy occurs during this process, it needs to be taken up by a brake resistor. In addition to a brake resistor (10 W) mounted inside the terminal box, another brake resistor (20 W) can also be connected externally alongside the terminal box via the terminal X4. These brake resistors are mounted and parameterised at the factory.

Product key		Rated resistance	Rated power	Thermal capacity	Mass
Motor	Brake resistor				
		R_N	P_N	C_{th}	m
		[Ω]	[kW]	[KWs]	[kg]
MSEMA□□063-42		400	10.0	100	0.050
MSEMA□□080-32	ERBU390R020W	390	20.0	250	0.17

Terminal box dimensions with external brake resistor

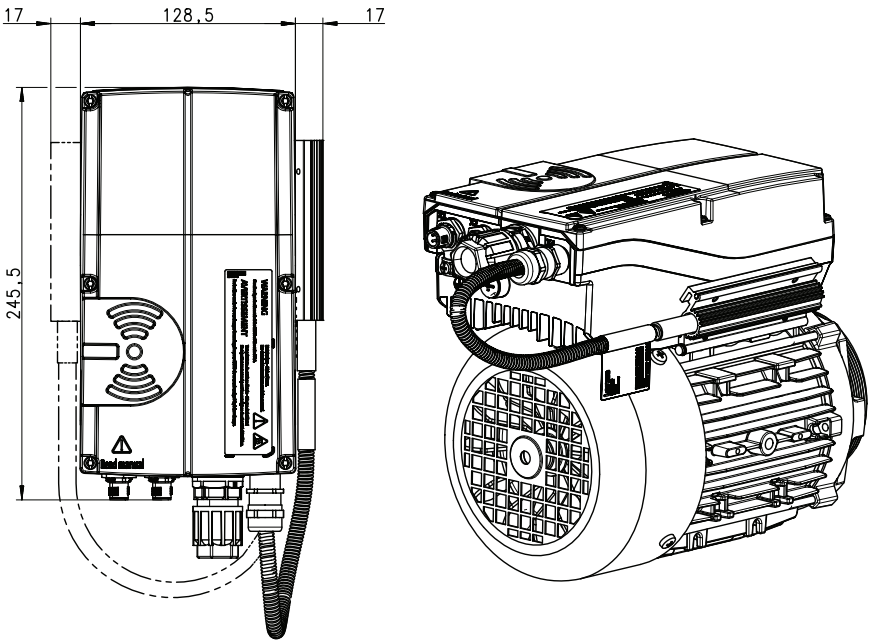



NFC adapter

The settings of the Lenze Smart Motor can be specified/adjusted using a smartphone or a PC. If the settings are to be made using a PC, this is performed using the EASY Starter engineering tool (extended version, software licence "EASY Advanced" or "Engineer HighLevel" required). Communication with the motor takes place via an NFC adapter. The connection to the PC is established via the USB interface.



NFC adapter

Mode		Features	Product key
NFC adapter		Input-side voltage supply via USB connection on PC Diagnostic LEDs Hot-pluggable	EZAETF001

Nuts for QUICKON connection

As counterparts the following 4 nuts can easily be fitted to the connecting cable to ensure a fast and easy QUICKON connection. No special tools are required for installation, only standard tools for stripping the insulation.

Mode	Features	Product key
QUICKON nut	For fast and easy connection Cable diameter: 6...10 mm	EWS0088
	For fast and easy connection Cable diameter: 9...14 mm	EWS0089
QUICKON connector with nut	For fast and easy connection Can be connected and disconnected safely (safe to touch) Cable diameter: 6...10 mm	EWS0090
	For fast and easy connection Can be connected and disconnected safely (safe to touch) Cable diameter: 9...14 mm	EWS0091



Easy setting

The Lenze Smart Motor is easy to set up for its intended applications using an NFC-capable smartphone or the familiar EASY Starter engineering tool. Both tools are suitable for entering speeds, directions of rotation and start/stop functions in plain text. No special conversions are necessary for the speeds. Engineering can really be this easy.

Setting via smartphone

The Lenze Smart Motor can be set up using an Android smartphone. The corresponding app (available in both German and English) can be ordered via www.Lenze.com or downloaded via the Google Store. The data records created are also easy to archive on the smartphone, from where they can then be reloaded to the Lenze Smart Motor for repeat applications.

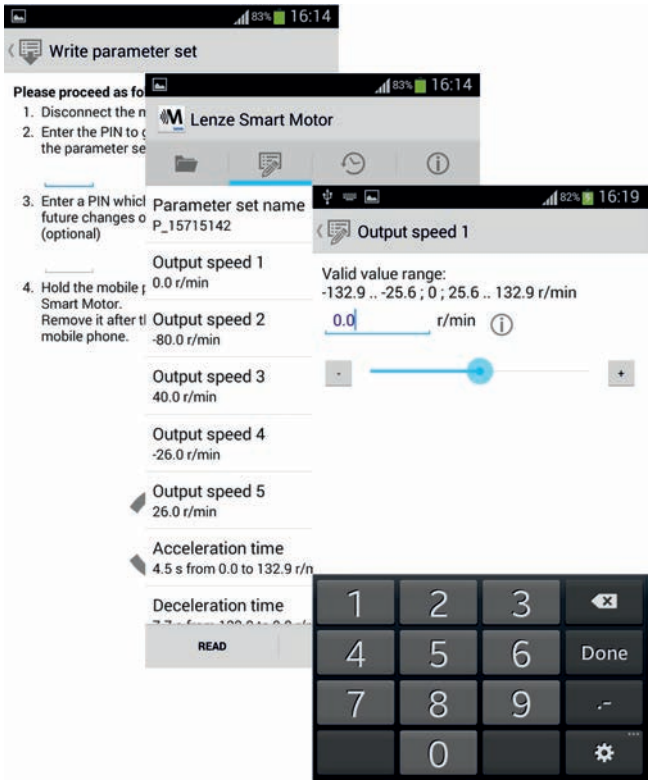

Setting via PC

The Lenze Smart Motor can be set up using the EASY Starter engineering tool (extended version, software licence "EASY Advanced" or "Engineer HighLevel" required). The software can easily be downloaded via www.Lenze.com. Since the settings are very easy and clearly structured, the Lenze Smart Motor also uses a basic dialog that can be called up directly via the navigator. The corresponding button is located directly in the navigation bar. Just like other product settings, the parameter values can be archived here.

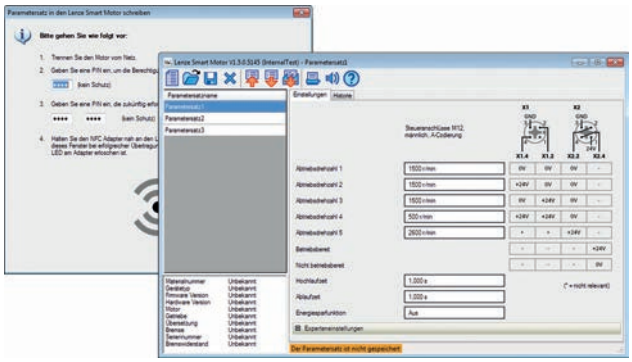



13449901

Lenze SE
Hans-Lenze-Straße 1
D-31855 Aerzen
Phone: +49 (0)5154 82-0
Telefax: +49 (0)5154 82 28 00

www.Lenze.com