L-force catalogue

Automation systems
Drive solutions

Controls
Inverters
Motors
Gearboxes
Engineering Tools

Motors: MCS synchronous servo motors, MCA asynchronous servo motors

Gearboxes: g700-P planetary gearbox

Lenze
As easy as that.

Contents of the L-force catalogue

About Lenze		Lenze makes many things easy for you.	
		A matter of principle: the right products for every application.	
		L-force product portfolio	
Automation systems		Controller-based Automation	1.1
		Drive-based automation	1.2
Drive solutions		HighLine tasks	2.1
		StateLine tasks	2.2
		BaseLine tasks	2.3
Controls	Cabinet Controller	Controller 3200 C	3.1
		Controller c300	3.2
	Panel Controller	Controller p500	3.3
		Controller p300	3.4
	'	I/O system 1000	3.5
		Monitor Panel	3.6
Inverters	Decentralised	Inverter Drives 8400 protec	4.1
		Inverter Drives 8400 motec	4.2
	Cabinet	Servo Drives 9400 HighLine	4.4
		Inverter Drives 8400 TopLine	4.5
		Servo Inverters i700	4.6
		Inverter Drives 8400 HighLine	4.7
		Inverter Drives 8400 StateLine	4.8
		Inverter Drives 8400 BaseLine	4.10
Motors	Servo motors	MCS synchronous servo motors	5.1
		MD□KS synchronous servo motors	5.2
		MQA asynchronous servo motors	5.3
		MCA asynchronous servo motors	5.4
	Three-phase AC motors	MF three-phase AC motors	5.5
		MH three-phase AC motors	5.6
		MD three-phase AC motors	5.7
		m300 Lenze Smart Motor	5.8
		MD/MH basic three-phase AC motors	5.9
Gearboxes	Axial gearbox	g700-P planetary gearbox	6.1
		MPR/MPG planetary gearboxes	6.2
		g500-H helical gearbox	6.3
		GST helical gearboxes	6.4
		g500-S shaft-mounted helical gearbox	6.5
		GFL shaft-mounted helical gearboxes	6.6
	Right-angle gearbox	g500-B bevel gearbox	6.7
		GKR bevel gearboxes	6.8
		GKS helical-bevel gearboxes	6.9
		GSS helical-worm gearboxes	6.10
	Motor data	Assignment see above	6.11
Engineering Tools		Navigator	7.1
		Drive Solution Designer	7.2
		Drive Solution Catalogue	7.3
		Engineer	7.4
		PLC Designer	7.5
		VisiWinNET®	7.6
		EASY Starter	7.7

Selected portfolio

Additional portfolio

Lenze makes many things easy for you.

With our motivated and committed approach, we work together with you to create the best possible solution and set your ideas in motion - whether you are looking to optimise an existing machine or develop a new one. We always strive to make things easy and seek perfection therein. This is anchored in our thinking, in our services and in every detail of our products. It's as easy as that!

1

Developing ideas

Are you looking to build the best machine possible and already have some initial ideas? Then get these down on paper together with us, starting with small innovative details and stretching all the way to completely new machines. Working together, we will develop an intelligent and sustainable concept that is perfectly aligned with your specific requirements.

2

Drafting concepts

We see welcome challenges in your machine tasks, supporting you with our comprehensive expertise and providing valuable impetus for your innovations. We take a holistic view of the individual motion and control functions here and draw up consistent, end-to-end drive and automation solutions for you - keeping everything as easy as possible and as extensive as necessary.

3

Implementing solutions

Our easy formula for satisfied customers is to establish an active partnership with fast decision-making processes and an individually tailored offer. We have been using this simple principle to meet the ever more specialised customer requirements in the field of mechanical engineering for many years.

4

Manufacturing machines

Functional diversity in perfect harmony: as one of the few full-range providers in the market, we can provide you with precisely those products that you actually need for any machine task – no more and no less. Our L-force product portfolio, a consistent platform for implementing drive and automation tasks, is invaluable in this regard.

5

Ensuring productivity

Productivity, reliability and new performance peaks on a daily basis – these are our key success factors for your machine. After delivery, we offer you cleverly devised service concepts to ensure continued safe operation. The primary focus here is on technical support, based on the excellent application expertise of our highly-skilled and knowledgeable after-sales team.

A matter of principle: the right products for every application.

Lenze's extensive L-force product portfolio follows a very simple principle. The functions of our finely scaled products are assigned to the three lines Base-Line, State-Line or High-Line.

But what does this mean for you? It allows you to quickly recognise which products represent the best solution for your own specific requirements.

Powerful products with a major impact:
- Easy handling
- High quality and durability
- Reliable technologies in tune with the latest developments

Lenze products undergo the most stringent testing in our own laboratory. This allows us to ensure that you will receive consistently high quality and a long service life. In addition to this, five logistics centres ensure that the Lenze products you select are available for quick delivery anywhere across the globe. It's as easy as that!

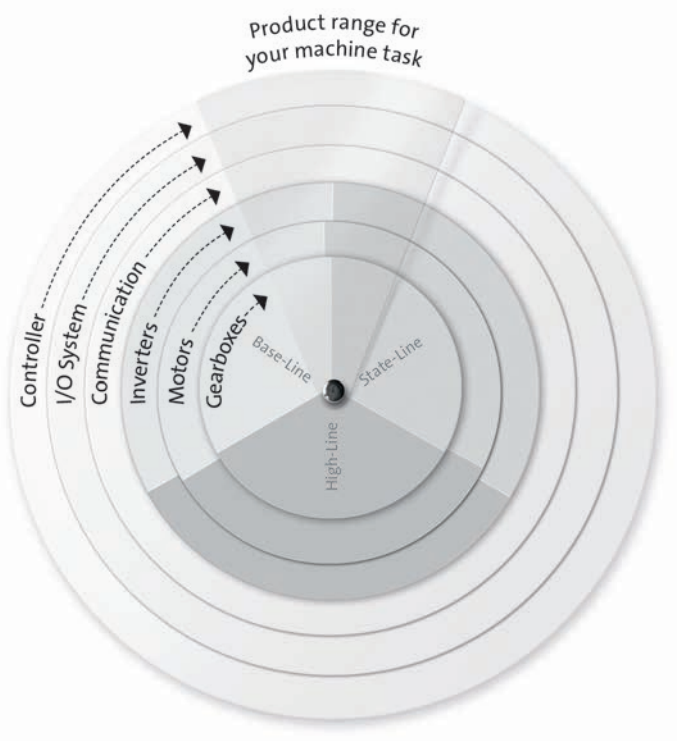

L-force product portfolio

Controls

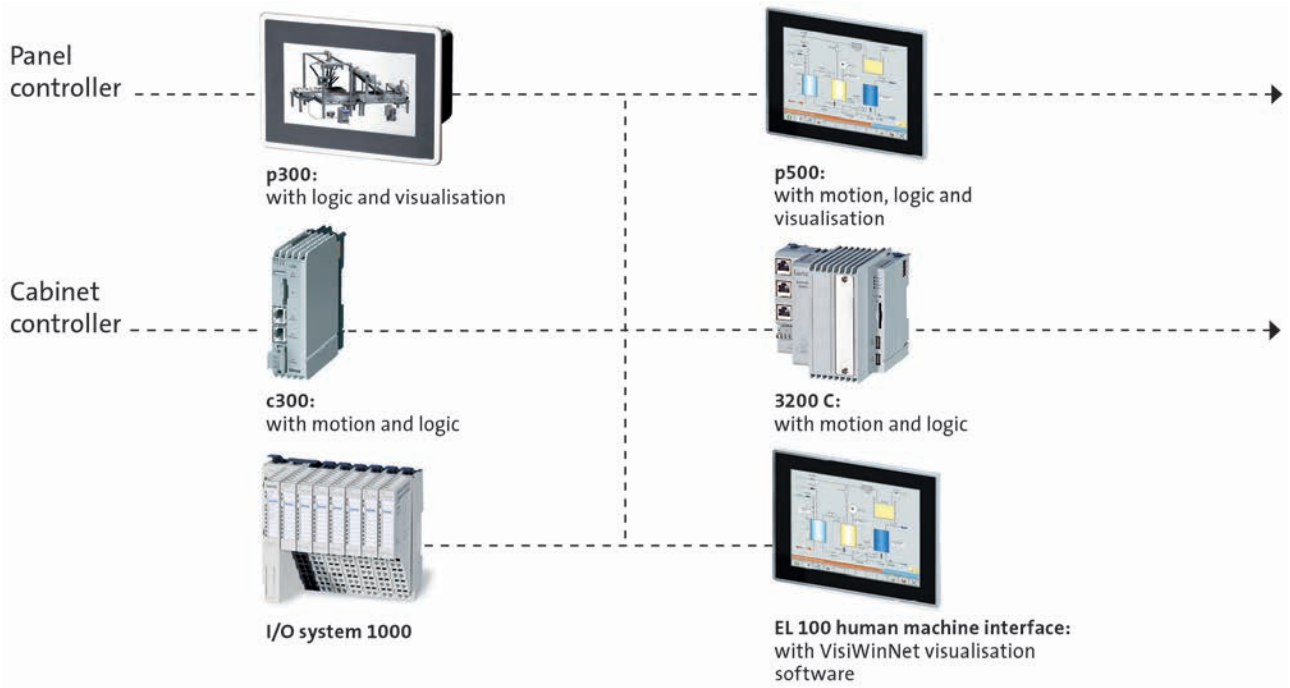

Engineering Tools

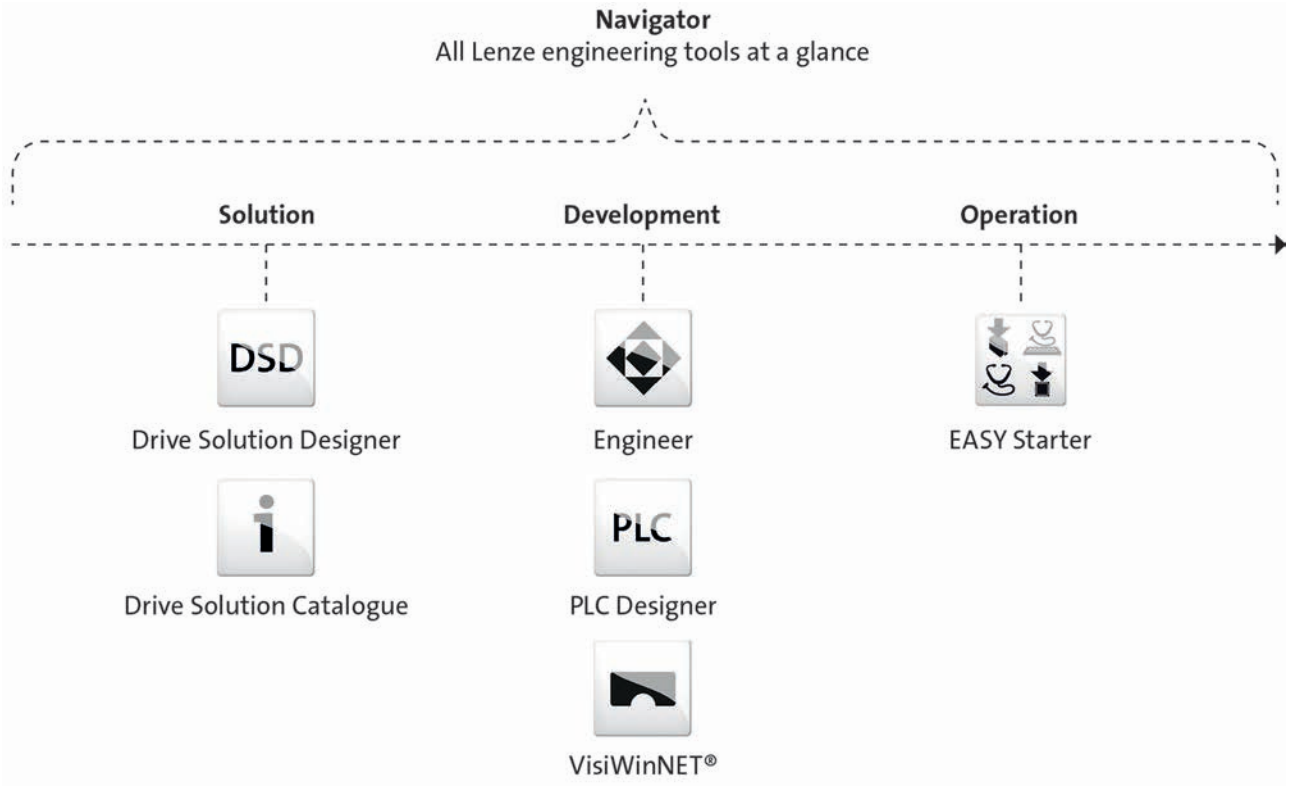

L-force product portfolio

Inverters

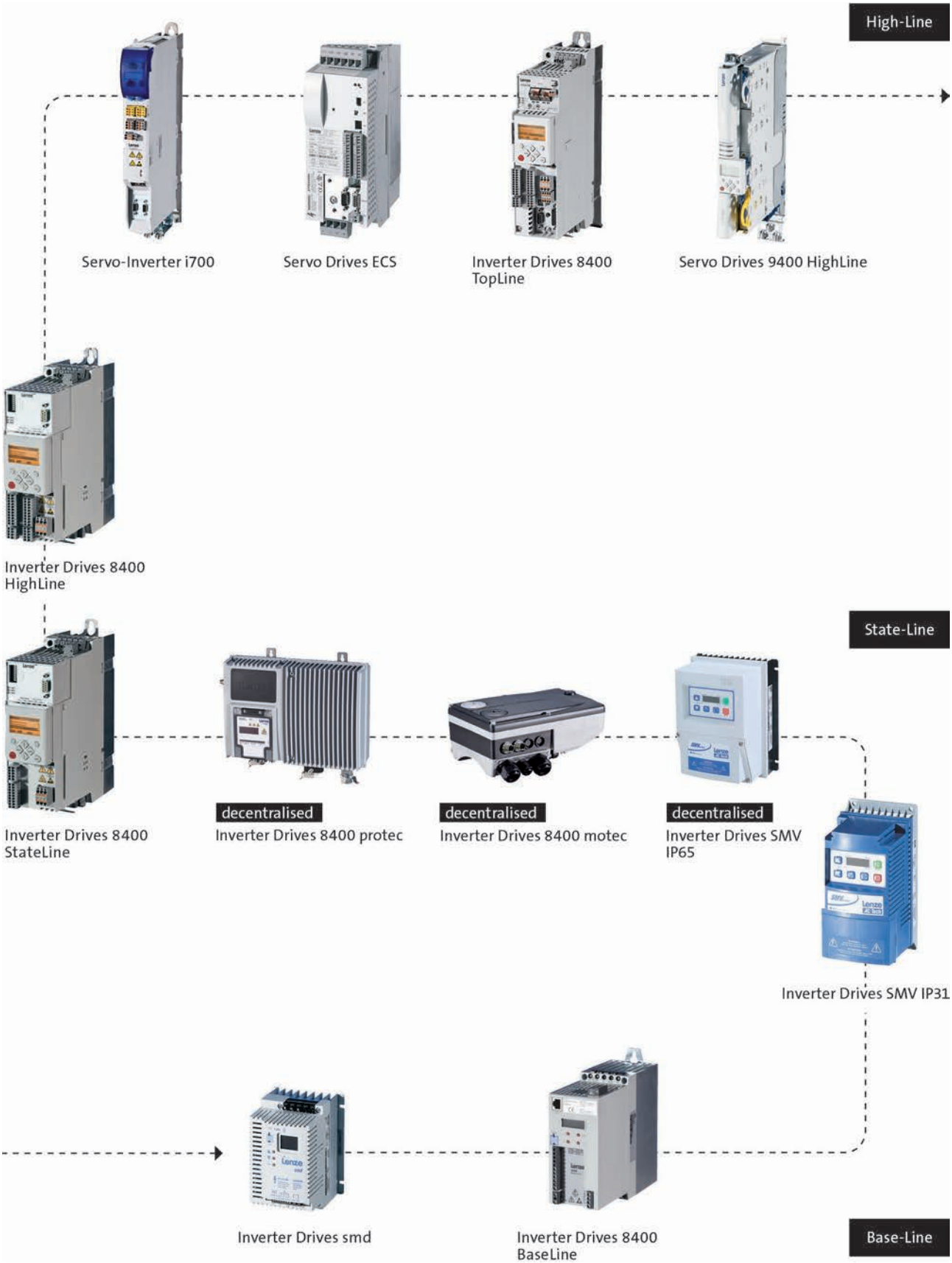

L-force product portfolio

Motors

High-Line

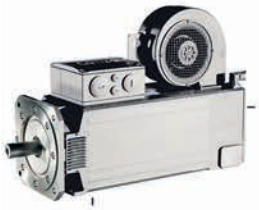

MQA asynchronous servo motors



SDSGS synchronous servo motors



MDXKS synchronous servo motors



Synchronous servo motors MCS



Asynchronous servo motors MCA



Asynchronous servo motors SDSGA

State-Line



MF three-phase AC motors



MH three-phase AC motors



MD three-phase AC motors



Basic MD/MH three-phase AC motors

Base-Line

L-force product portfolio

Gearboxes

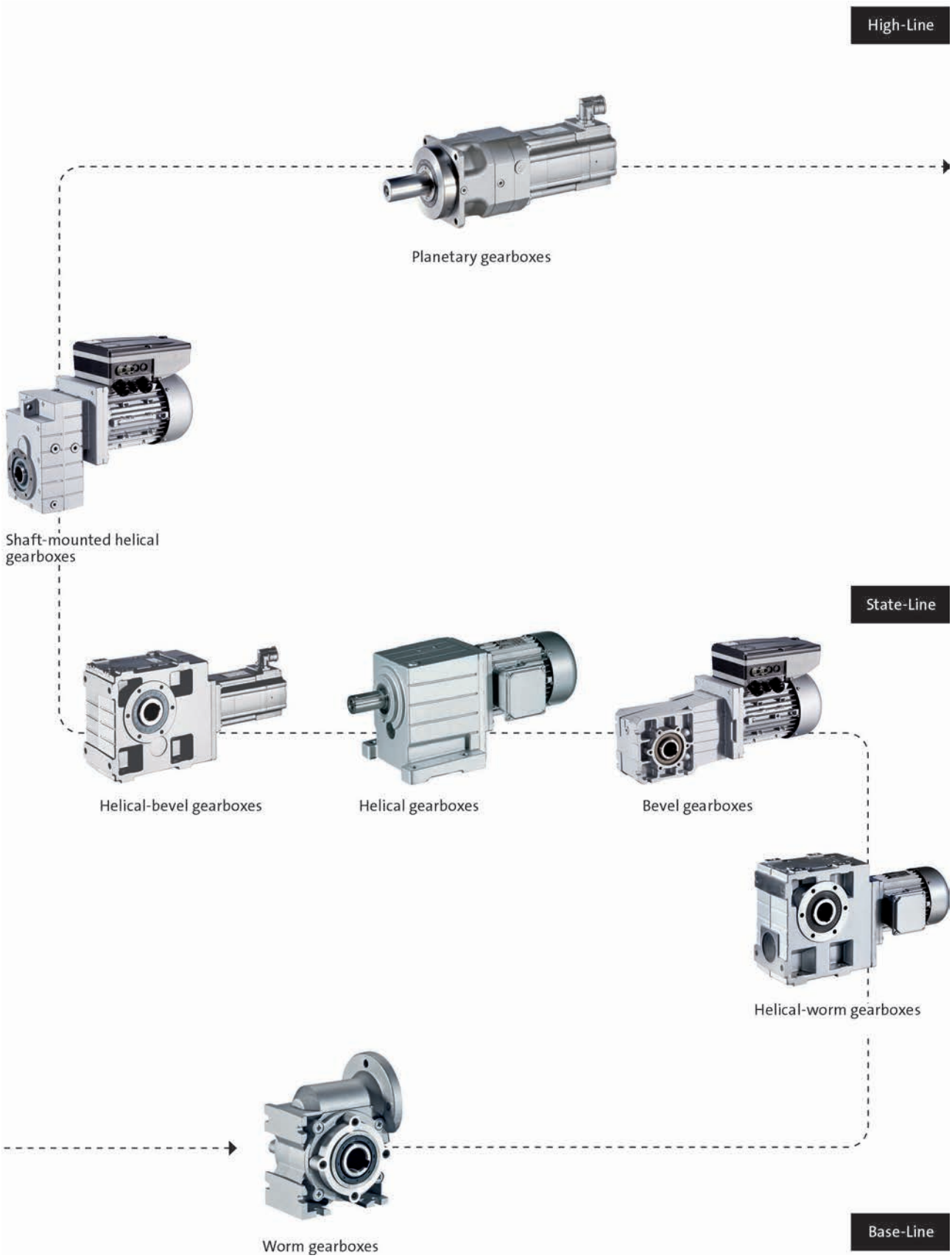

g700-P planetary geared motors

3 ... 707 Nm (synchronous servo motors)

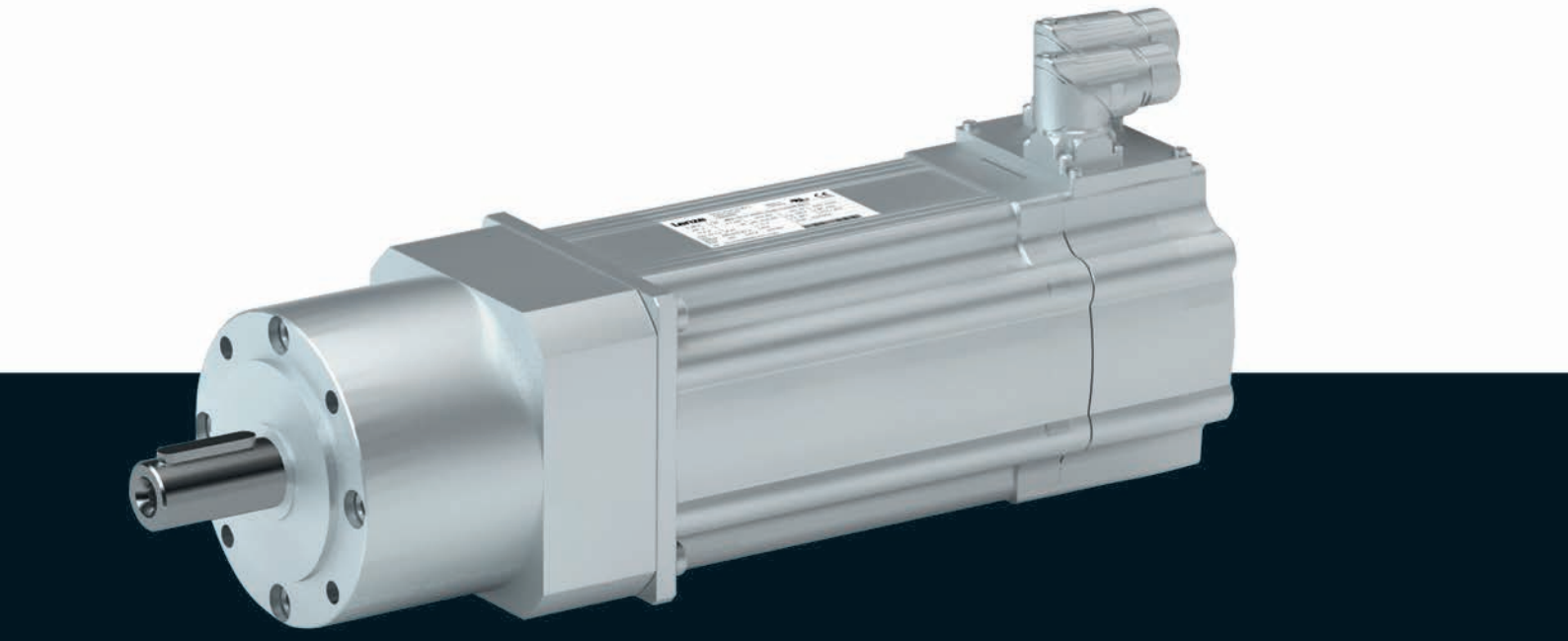

g700-P planetary geared motors

Contents



General information	List of abbreviations	6.1.1 - 5
	Product information	6.1.1 - 6
	Equipment	6.1.1 - 7
	The gearbox kit	6.1.1 - 9
	Dimensioning	6.1.1 - 14
Technical data	Selection tables, notes	6.1.1 - 17
	Selection tables	6.1.1 - 18
	Dimensions, notes	6.1.1 - 43
	Dimensions, self-ventilated motors	6.1.1 - 44
	Dimensions, forced ventilated motors	6.1.1 - 64
	Weights, self-ventilated motors	6.1.1 - 72
	Weights, forced ventilated motors	6.1.1 - 73
	Surface and corrosion protection	6.1.1 - 74

g700-P planetary geared motors

Contents





List of abbreviations

c		Load capacity
i		Ratio
J	[kgcm²]	Moment of inertia
m	[kg]	Mass
M_2	[Nm]	Output torque
$M_{2, max}$	[Nm]	Max. output torque
$n_{2, eto}$	[r/min]	Transition speed
$n_{2, th}$	[r/min]	Thermal limit speed

CCC	China Compulsory Certificate
CE	Communauté Européenne
CSA	Canadian Standards Association
cURus	Combined certification marks of UL for the USA and Canada
DIN	Deutsches Institut für Normung e.V.
EMC	Electromagnetic compatibility
EN	European standard
GOST	Certificate for Russian Federation
IEC	International Electrotechnical Commission
IM	International Mounting Code
IP	International Protection Code
NEMA	National Electrical Manufacturers Association
UL	Underwriters Laboratory Listed Product
UR	Underwriters Laboratory Recognized Product
VDE	Verband deutscher Elektrotechniker (Association of German Electrical Engineers)

g700-P planetary geared motors

General information



Product information

In combination with synchronous servo motors, our planetary gearbox form a compact and powerful drive unit. Numerous options at the input end provide for the drive to be easily and precisely adapted to your application.

The planetary gearbox g700 is the ideal solution for demanding and dynamic tasks. With its high reliability, long service life and outstanding scalability, it provides everything you need to manage demanding machine tasks.

Versions

- High input speed possible Max. input speed 18000 rpm
- Wide variety of ratios i= 3...512 in 24 ratios
- High rated torque bandwidth 20 ... 800 Nm in five sizes
- Lifetime lubrication
- Suitable for any mounting position, hence only one variant
- With MCS synchronous servo motors, rated torque: 0.5 Nm ... 72 Nm

The product name

Gearbox type	Product range		Design	Rated torque [Nm]	Product
Planetary gearbox	g700	-	P	20	g700-P20
				44	g700-P44
				130	g700-P130
				260	g700-P260
				800	g700-P800



Equipment

Overview

The equipment includes all the options available as standard and all the built-on accessories of the product.

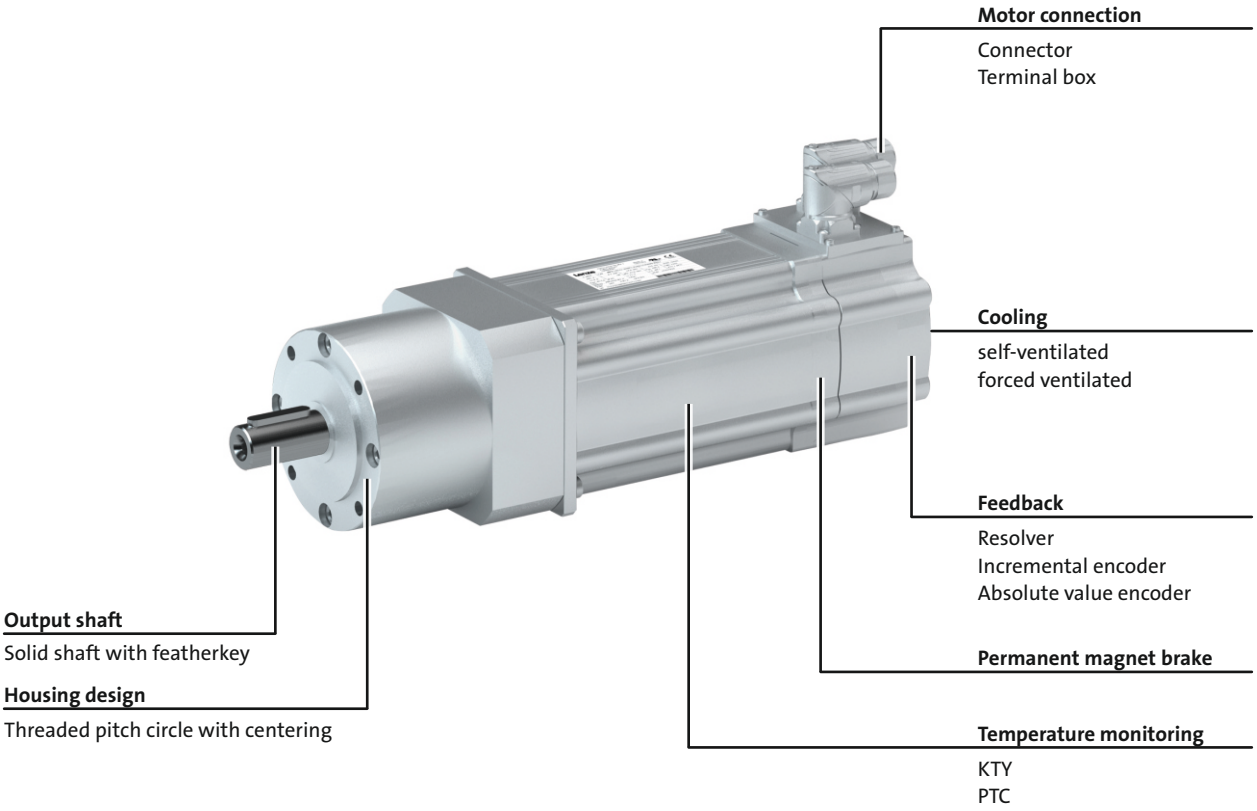





The gearbox kit

Geared motor

Product	g700-P20	g700-P44	g700-P130	g700-P260	g700-P800
Motor type	Synchronous servo motor				
Servo motor					
0.6 - 1.5 Nm	MCS06				
2.3 - 4.5 Nm		MCS09			
5.5 - 17 Nm			MCS12		
9.2 - 42 Nm				MCS14	
27 - 72 Nm				MCS19	
Technical data					
Output torque	See selection table				
Output speed	See selection table				
Ratio	See selection table				
Load capacity	See selection table				
Moment of inertia	See selection table				
Mounting position					
Standard	Any				
Colour	Primed Paint in various corrosion-protection designs in accordance with RAL colours				
Surface and corrosion protection	Without OKS(uncoated) OKS-G (primed) - OKS-M (medium) OKS-L (large)				



The gearbox kit

Motor details

Product	MCS				
	06C41 06C60 06F41 06F60 06I41 06I60	09L41 09D41 09L51 09D60 09F38 09F60 09H41 09H60	12H14 12L17 12D17 12L20 12H15 12D20 12D35 12H34 12L39 12D41 12H35 12L41	14D14 14L14 14H12 14P11 14P14 14D15 14H15 14L15 14H28 14P26 14L30 14D30 14H32 14P32 14D36 14L32	19F12 19P12 19J12 19P14 19J14 19F14 19J29 19P29 19F29 19J30 19F30 19P30
Connection type					
	Plug connectors	Plug connectors Terminal box			
Permanent magnet holding brake					
Rated torque [Nm]	2.2	8.0	12	22	37
Brake voltage [V]	DC 24				
Feedback					
	With absolute value encoder With incremental encoder With resolver				
Cooling					
	Self-ventilated		Self-ventilated Forced-ventilated		
Temperature monitoring					
	KTY83-110 thermal detector	KTY83-110 thermal detector PTC thermistor			
Approval					
	cURus GOST_R UkrSepro				
Enclosure					
	IP54 IP65				

► Further information and installation feasibilities can be found in the Motors chapter.



The gearbox kit

Motor details

Connection type



Plug connectors



Terminal box

Cooling: self-ventilated



With resolver



With permanent magnet brake



With feedback
With feedback and permanent magnet brake

Cooling: forced ventilated



With resolver

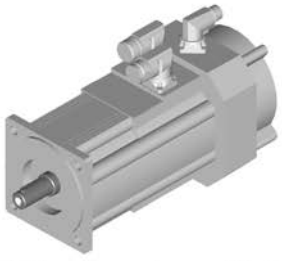

With permanent magnet brake

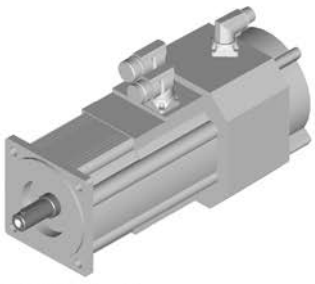

With feedback
With feedback and permanent magnet brake



The gearbox kit

Gearbox details

Product	g700-P20	g700-P44	g700-P130	g700-P260	g700-P800
Driven shaft					
Solid shaft with featherkey [mm]	10x23	14x30	20x36	25x50	40x80
Design	Standard				
Gasket	NBR				
Bearing	Standard				
Housing					
Housing version	Without foot with centering				
Output flange					
flange diameter [mm]	40	60	80	115	160
Lubricant					
Type	Klüberplex BEM34-132				
Breather element	Without				
Backlash					
Backlash	Standard				

► Further information and installation feasibilities can be found in the Gearboxes chapter.



The gearbox kit

Gearbox details

Solid shaft
 With centering



Dimensioning

General information about the data provided in this catalogue

The powers, torques and speeds specified in this catalogue are rounded values and are valid under the following conditions:

- Operating time/day = 8 h (100% OT)
- Duty class I for up to 10 switching operations/h
- Mounting positions and designs in this catalogue
- Standard lubricant
- T_{amb} = 30 °C for gearboxes,
  T_{amb} = 40 °C for motors (in accordance with EN 60034)
- Site altitude < = 1000 m amsl
- The selection tables provide the permissible mechanical powers and torques. For notes on the thermal power limit, see chapter drive dimensioning.
- The rated power specified for motors and geared motors applies to operating mode S1 (in accordance with EN 60034).

Under different operating conditions, the values obtained may vary from those listed here.
In the case of extreme operating conditions, please consult your Lenze sales office.



Dimensioning

Load capacity and application factor

Load capacity c of gearbox
Rated value for the load capacity of Lenze geared motors.
- c is the ratio of the permissible rated torque of the gearbox to the rated torque supplied by the drive component (e.g. the built-in Lenze motor).
- The value of c must always be greater than the value of the application factor k calculated for the application.

Application factor k (according to DIN 3990)
Takes into account the influence of temporally variable loads which are actually present during the anticipated operating time of gearboxes and geared motors.
k is determined by:
- the type of load
- the load intensity
- temporal influences

Duty class	Load type
I	Smooth operation, small or light jolts
II	Uneven operation, average jolts
III	Uneven operation, severe jolts and/or alternating load

Application factor k

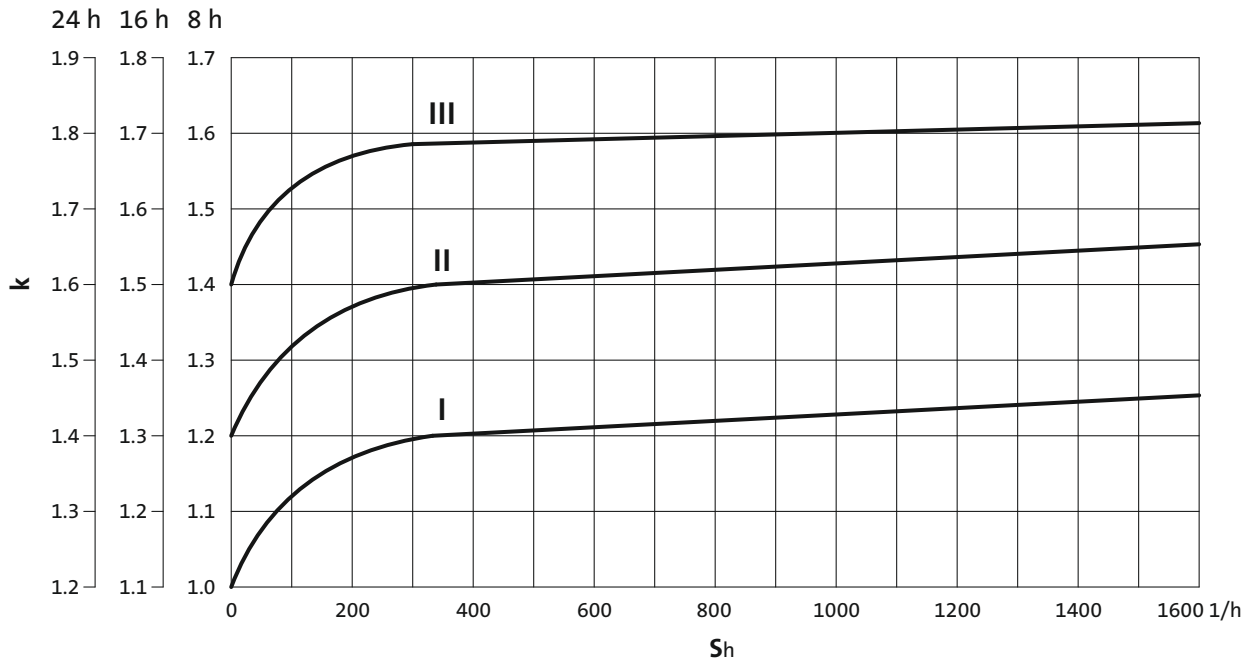

► S_h= switchings/h



Dimensioning

Weights

The values given in the tables consider the following gearbox/motor combination:
- Gearbox with solid shaft including lubricant amount
- Motor with feedback

For versions deviating from this, additional weights have to be considered.

The respective values can be found for:
- Geared motors with feedback
  > Chapter: Geared motors/Technical data
- Motor options: Brake
  > Chapter: Motors/Accessories

Moments of inertia

The given moments of inertia of the gearbox refer to the drive shaft. The influence of the ratio (i^2) has been considered in the data.

When the total moment of inertia of the geared motor is calculated, the values of the geared motors and the brake have to be added.

The respective values can be found for:
- Geared motors with feedback
  > Chapter: Geared motors/Technical data/Selection tables
- Motor options: Brake
  > Chapter: Motors/Accessories



Selection tables, notes

Notes on the selection tables

The selection tables show the available combinations of gearbox type, number of stages, ratio and motor. They are used only to provide basic orientation.
The following legend indicates the structure of the selection tables.

Number of the gear stage of the gearbox

2-stage gearboxes

Inverter operation						i	Product		Cooling	
$M_{2,max}$ [Nm]	$n_{2,th}$ [r/min]	M_2 [Nm]	$n_{2,eto}$ [r/min]	c	J [kgcm²]		g700	MCS		
6.7	506	5	506	1.3	0.200	8.000	-P20	06C41	Selbst	27
9.4	579	4	579	2.1	0.200	7.000	-P20	06C41	Selbst	27
15	810	3	810	4.8	0.200	5.000	-P20	06C41	Selbst	27
17	405	6	405	2.6	0.300	10.000	-P44	06C41	Selbst	29

For operating mode S1
Torque **M_2** and
thermal output speed **$n_{2,th}$**

Product Gearbox

Product Motor

Ratio i

Moment of inertia of geared motor

Type of motor cooling

Page number for dimensions

For operating mode S2,S3 und S6
Max. permissible acceleration torque of geared motor **$M_{2,max}$** and
output speed **$n_{2,eto}$**

Load capacity of the gearbox
c is the ratio between the permissible rated torque of the gearbox and the rated torque of the three-phase AC motor (converted to the driven shaft).
c must be always higher than the service factor **k** determined for the application **k**.

$$c = \frac{M_{2,zul}}{M_{1,N} \cdot i \cdot \eta_{Getr}} > k$$



Selection tables

1-stage gearboxes

Inverter operation						i	Product		Cooling	
$M_{2, max}$ [Nm]	$n_{2, th}$ [r/min]	M_2 [Nm]	$n_{2, eto}$ [r/min]	c	J [kgcm²]		g700	MCS		
5.0	500	5	500	1.1	0.200	10.000	-P20	06C60	natural	44
6.0	625	4	625	1.6	0.200	8.000	-P20	06C60	natural	44
6.0	506	5	506	1.3	0.200	8.000	-P20	06C41	natural	44
9.0	714	3	714	2.5	0.200	7.000	-P20	06C60	natural	44
9.0	579	4	579	2.1	0.200	7.000	-P20	06C41	natural	44
10	1000	2	1000	5.7	0.200	5.000	-P20	06C60	natural	44
10	810	3	810	4.8	0.200	5.000	-P20	06C41	natural	44
15	450	5	450	3.1	0.300	10.000	-P44	06C60	natural	46
15	450	9	450	1.7	0.300	10.000	-P44	06F60	natural	46
15	450	12	450	1.3	0.400	10.000	-P44	06I60	natural	46
15	405	6	405	2.6	0.300	10.000	-P44	06C41	natural	46
15	405	12	405	1.3	0.300	10.000	-P44	06F41	natural	46
15	405	14	405	1.0	0.400	10.000	-P44	06I41	natural	46
16	563	3	563	4.6	0.200	8.000	-P44	06C60	natural	46
17	506	4	506	3.9	0.200	8.000	-P44	06C41	natural	46
18	563	7	563	2.6	0.300	8.000	-P44	06F60	natural	46
18	563	9	563	1.9	0.400	8.000	-P44	06I60	natural	46
18	563	14	563	1.3	1.100	8.000	-P44	09D60	natural	46
18	506	9	506	1.9	0.300	8.000	-P44	06F41	natural	46
18	506	12	506	1.6	0.400	8.000	-P44	06I41	natural	46
18	506	18	506	1.0	1.100	8.000	-P44	09D41	natural	46
24	1500	4	1500	5.3	1.200	3.000	-P44	09D60	natural	46
25	1350	6	1350	4.1	1.200	3.000	-P44	09D41	natural	46
25	810	6	810	5.4	0.400	5.000	-P44	06I41	natural	46
25	643	6	643	4.1	0.300	7.000	-P44	06F60	natural	46
25	643	8	643	3.1	0.400	7.000	-P44	06I60	natural	46
25	643	12	643	2.0	1.100	7.000	-P44	09D60	natural	46
25	643	16	643	1.5	1.500	7.000	-P44	09F60	natural	46
25	579	8	579	3.1	0.300	7.000	-P44	06F41	natural	46
25	579	10	579	2.5	0.400	7.000	-P44	06I41	natural	46
25	579	15	579	1.6	1.100	7.000	-P44	09D41	natural	46
25	536	21	536	1.2	1.500	7.000	-P44	09F38	natural	46
28	1500	6	1500	4.0	1.600	3.000	-P44	09F60	natural	46
28	1250	9	1250	3.1	1.600	3.000	-P44	09F38	natural	46
29	500	8	500	5.4	0.600	8.000	-P130	06F41	natural	49
31	1125	6	1125	5.4	1.200	4.000	-P44	09D60	natural	46
33	1013	8	1013	4.2	1.200	4.000	-P44	09D41	natural	46
38	1125	8	1125	4.0	1.600	4.000	-P44	09F60	natural	46
38	938	11	938	3.1	1.600	4.000	-P44	09F38	natural	46
38	305	8	305	4.4	1.000	10.000	-P130	06F60	natural	49



Selection tables

1-stage gearboxes

Inverter operation						i	Product		Cooling	
$M_{2, max}$ [Nm]	$n_{2, th}$ [r/min]	M_2 [Nm]	$n_{2, eto}$ [r/min]	c	J [kgcm²]		g700	MCS		
38	305	11	305	3.3	1.000	10.000	-P130	06F41	natural	49
38	305	11	305	3.3	1.000	10.000	-P130	06I60	natural	49
38	305	14	305	2.6	1.000	10.000	-P130	06I41	natural	49
38	305	17	305	2.2	1.800	10.000	-P130	09D60	natural	49
38	305	22	305	1.7	1.800	10.000	-P130	09D41	natural	49
38	305	23	305	1.6	2.200	10.000	-P130	09F60	natural	49
38	305	29	305	1.3	2.600	10.000	-P130	09H60	natural	49
38	305	30	305	1.3	2.200	10.000	-P130	09F38	natural	49
38	305	35	305	1.1	3.500	10.000	-P130	09L51	natural	49
38	305	36	305	1.0	2.600	10.000	-P130	09H41	natural	49
40	900	8	900	4.5	1.200	5.000	-P44	09D60	natural	46
40	900	11	900	3.4	1.600	5.000	-P44	09F60	natural	46
40	810	10	810	3.5	1.200	5.000	-P44	09D41	natural	46
40	750	14	750	2.6	1.600	5.000	-P44	09F38	natural	46
41	500	8	500	5.4	0.700	8.000	-P130	06I60	natural	49
43	550	17	550	5.6	6.600	3.000	-P260	12D17	forced	66
43	500	10	500	4.3	0.700	8.000	-P130	06I41	natural	49
45	900	15	900	4.8	4.800	3.000	-P130	12D35	forced	64
45	650	14	650	5.3	4.800	3.000	-P130	12D20	natural	49
46	550	18	550	4.1	4.800	3.000	-P130	12D17	forced	64
50	500	13	500	3.6	1.500	8.000	-P130	09D60	natural	49
50	500	17	500	2.8	1.500	8.000	-P130	09D41	natural	49
50	500	18	500	2.7	1.900	8.000	-P130	09F60	natural	49
50	500	23	500	2.1	2.300	8.000	-P130	09H60	natural	49
50	500	28	500	1.8	3.200	8.000	-P130	09L51	natural	49
50	500	29	500	1.7	2.300	8.000	-P130	09H41	natural	49
50	500	33	500	1.5	4.400	8.000	-P130	12D41	natural	49
50	500	35	500	1.4	3.200	8.000	-P130	09L41	natural	49
50	469	24	469	2.1	1.900	8.000	-P130	09F38	natural	49
50	441	46	441	1.1	4.400	8.000	-P130	12D35	forced	64
50	244	42	244	1.2	4.400	8.000	-P130	12D20	natural	49
56	571	11	571	5.1	1.500	7.000	-P130	09D60	natural	49
58	413	23	413	5.7	5.800	4.000	-P260	12D17	forced	66
59	571	14	571	4.0	1.500	7.000	-P130	09D41	natural	49
60	625	20	625	4.9	4.500	4.000	-P130	12D35	forced	64
60	488	18	488	5.3	4.500	4.000	-P130	12D20	natural	49
62	571	15	571	3.8	1.900	7.000	-P130	09F60	natural	49
62	571	19	571	3.0	2.300	7.000	-P130	09H60	natural	49
62	571	24	571	2.5	3.200	7.000	-P130	09L51	natural	49
62	571	25	571	2.4	2.300	7.000	-P130	09H41	natural	49



Selection tables

1-stage gearboxes

Inverter operation						i	Product		Cooling	
$M_{2, max}$ [Nm]	$n_{2, th}$ [r/min]	M_2 [Nm]	$n_{2, eto}$ [r/min]	c	J [kgcm²]		g700	MCS		
62	571	29	571	2.1	4.400	7.000	-P130	12D41	natural	49
62	571	30	571	2.0	3.200	7.000	-P130	09L41	natural	49
62	536	20	536	3.0	1.900	7.000	-P130	09F38	natural	49
62	504	40	504	1.5	4.400	7.000	-P130	12D35	forced	64
62	504	50	504	1.2	7.700	7.000	-P130	12H35	natural	49
62	429	54	429	1.1	7.700	7.000	-P130	12H30	natural	49
62	413	24	413	4.2	4.500	4.000	-P130	12D17	forced	64
62	279	37	279	1.7	4.400	7.000	-P130	12D20	natural	49
62	236	47	236	1.3	4.400	7.000	-P130	12D17	forced	64
72	850	19	850	5.2	11.000	3.000	-P260	14D36	natural	54
72	850	19	850	5.2	9.900	3.000	-P260	12H35	natural	54
72	330	28	330	5.7	5.500	5.000	-P260	12D17	forced	66
73	850	20	850	4.9	9.900	3.000	-P260	12H30	natural	54
75	600	18	600	5.2	4.500	5.000	-P130	12D41	natural	49
76	500	24	500	4.3	11.000	3.000	-P260	14D15	natural	54
77	900	20	900	3.9	8.100	3.000	-P130	12H35	natural	49
77	500	27	500	3.9	9.900	3.000	-P260	12H15	natural	54
78	900	21	900	3.6	8.100	3.000	-P130	12H30	natural	49
78	850	28	850	3.7	11.000	3.000	-P260	14D30	forced	66
78	850	28	850	3.7	9.900	3.000	-P260	12H34	forced	66
78	265	15	265	5.4	3.700	10.000	-P260	09D60	natural	54
79	600	27	600	3.7	4.500	5.000	-P130	12D35	forced	64
79	450	33	450	3.3	11.000	3.000	-P260	14D14	forced	66
79	450	33	450	3.3	9.900	3.000	-P260	12H14	forced	66
79	390	24	390	4.1	4.500	5.000	-P130	12D20	natural	49
80	600	15	600	5.9	2.400	5.000	-P130	09H41	natural	49
80	500	28	500	2.9	8.100	3.000	-P130	12H15	natural	49
81	330	32	330	3.2	4.500	5.000	-P130	12D17	forced	64
83	265	20	265	4.3	3.700	10.000	-P260	09D41	natural	54
95	265	21	265	4.1	4.100	10.000	-P260	09F60	natural	54
95	265	27	265	3.3	4.500	10.000	-P260	09H60	natural	54
95	265	28	265	3.2	4.100	10.000	-P260	09F38	natural	54
95	265	34	265	2.7	5.400	10.000	-P260	09L51	natural	54
95	265	36	265	2.6	4.500	10.000	-P260	09H41	natural	54
95	265	41	265	2.3	6.600	10.000	-P260	12D41	natural	54
95	265	43	265	2.2	5.400	10.000	-P260	09L41	natural	54
95	265	58	265	1.6	6.600	10.000	-P260	12D35	forced	66
95	265	72	265	1.3	11.000	10.000	-P260	14D36	natural	54
95	265	72	265	1.3	9.900	10.000	-P260	12H35	natural	54
95	265	77	265	1.2	9.900	10.000	-P260	12H30	natural	54



Selection tables

1-stage gearboxes

Inverter operation						i	Product		Cooling	
$M_{2, max}$ [Nm]	$n_{2, th}$ [r/min]	M_2 [Nm]	$n_{2, eto}$ [r/min]	c	J [kgcm²]		g700	MCS		
95	195	53	195	1.8	6.600	10.000	-P260	12D20	natural	54
95	165	67	165	1.4	6.600	10.000	-P260	12D17	forced	66
95	150	88	150	1.1	11.000	10.000	-P260	14D15	natural	54
96	625	25	625	5.3	9.800	4.000	-P260	14D36	natural	54
96	625	25	625	5.3	9.100	4.000	-P260	12H35	natural	54
98	625	27	625	4.9	9.100	4.000	-P260	12H30	natural	54
101	438	21	438	5.0	2.800	8.000	-P260	09F38	natural	54
101	375	32	375	4.3	9.800	4.000	-P260	14D15	natural	54
102	625	27	625	3.9	7.800	4.000	-P130	12H35	natural	49
102	375	35	375	4.0	9.100	4.000	-P260	12H15	natural	54
103	625	37	625	3.8	9.800	4.000	-P260	14D30	forced	66
103	625	37	625	3.8	9.100	4.000	-P260	12H34	forced	66
104	625	29	625	3.7	7.800	4.000	-P130	12H30	natural	49
105	338	44	338	3.3	9.800	4.000	-P260	14D14	forced	66
105	338	44	338	3.3	9.100	4.000	-P260	12H14	forced	66
107	375	37	375	2.9	7.800	4.000	-P130	12H15	natural	49
108	500	26	500	4.6	5.400	7.000	-P260	12D41	natural	54
110	600	19	600	5.0	3.300	5.000	-P130	09L41	natural	49
110	600	35	600	3.0	7.800	5.000	-P130	12H35	natural	49
110	600	37	600	2.8	7.800	5.000	-P130	12H30	natural	49
110	300	48	300	2.2	7.800	5.000	-P130	12H15	natural	49
112	500	38	500	3.3	5.400	7.000	-P260	12D35	forced	66
113	279	34	279	3.6	5.400	7.000	-P260	12D20	natural	54
115	850	30	850	3.6	13.000	3.000	-P260	12L41	natural	54
115	850	39	850	2.8	17.000	3.000	-P260	14H32	natural	54
115	850	39	850	2.8	13.000	3.000	-P260	12L39	forced	66
115	850	49	850	2.3	26.000	3.000	-P260	14L32	natural	54
115	850	60	850	1.9	70.000	3.000	-P260	19F30	natural	54
115	650	37	650	2.9	13.000	3.000	-P260	12L20	natural	54
115	550	48	550	2.3	13.000	3.000	-P260	12L17	forced	66
115	500	45	500	2.4	17.000	3.000	-P260	14H15	natural	54
115	500	66	500	1.7	26.000	3.000	-P260	14L15	natural	54
115	475	78	475	1.4	70.000	3.000	-P260	19F14	natural	54
115	236	45	236	2.8	5.400	7.000	-P260	12D17	forced	66
116	500	22	500	5.2	3.300	7.000	-P260	09H41	natural	54
120	500	31	500	5.3	9.600	5.000	-P260	14D36	natural	54
120	500	31	500	5.3	8.800	5.000	-P260	12H35	natural	54
120	438	20	438	5.2	3.200	8.000	-P260	09H60	natural	54
120	438	25	438	4.3	4.100	8.000	-P260	09L51	natural	54
120	438	27	438	4.1	3.200	8.000	-P260	09H41	natural	54



Selection tables

1-stage gearboxes

Inverter operation						i	Product		Cooling	
$M_{2, max}$ [Nm]	$n_{2, th}$ [r/min]	M_2 [Nm]	$n_{2, eto}$ [r/min]	c	J [kgcm²]		g700	MCS		
120	438	31	438	3.6	5.300	8.000	-P260	12D41	natural	54
120	438	32	438	3.4	4.100	8.000	-P260	09L41	natural	54
120	438	45	438	2.6	5.300	8.000	-P260	12D35	forced	66
120	438	57	438	2.1	9.400	8.000	-P260	14D36	natural	54
120	438	57	438	2.1	8.600	8.000	-P260	12H35	natural	54
120	438	84	438	1.4	12.000	8.000	-P260	12L41	natural	54
120	438	108	438	1.1	12.000	8.000	-P260	12L39	forced	66
120	422	81	422	1.5	8.600	8.000	-P260	12H34	forced	66
120	403	108	403	1.1	15.000	8.000	-P260	14H32	natural	54
120	375	61	375	1.9	8.600	8.000	-P260	12H30	natural	54
120	375	81	375	1.5	9.400	8.000	-P260	14D30	forced	66
120	244	41	244	2.8	5.300	8.000	-P260	12D20	natural	54
120	244	104	244	1.1	12.000	8.000	-P260	12L20	natural	54
120	206	53	206	2.2	5.300	8.000	-P260	12D17	forced	66
120	188	71	188	1.7	9.400	8.000	-P260	14D15	natural	54
120	188	77	188	1.6	8.600	8.000	-P260	12H15	natural	54
120	169	92	169	1.3	9.400	8.000	-P260	14D14	forced	66
120	169	92	169	1.3	8.600	8.000	-P260	12H14	forced	66
122	500	34	500	5.0	8.800	5.000	-P260	12H30	natural	54
126	300	40	300	4.3	9.600	5.000	-P260	14D15	natural	54
128	300	44	300	4.0	8.800	5.000	-P260	12H15	natural	54
129	500	47	500	3.8	9.600	5.000	-P260	14D30	forced	66
129	500	47	500	3.8	8.800	5.000	-P260	12H34	forced	66
132	270	54	270	3.3	9.600	5.000	-P260	14D14	forced	66
132	270	54	270	3.3	8.800	5.000	-P260	12H14	forced	66
133	300	57	300	5.8	26.000	3.000	-P800	14H12	forced	68
135	500	21	500	5.5	4.200	7.000	-P260	09L51	natural	54
135	500	27	500	4.4	4.200	7.000	-P260	09L41	natural	54
135	500	49	500	2.6	9.500	7.000	-P260	14D36	natural	54
135	500	49	500	2.6	8.700	7.000	-P260	12H35	natural	54
135	500	74	500	1.8	12.000	7.000	-P260	12L41	natural	54
135	500	94	500	1.4	12.000	7.000	-P260	12L39	forced	66
135	482	71	482	1.9	8.700	7.000	-P260	12H34	forced	66
135	461	94	461	1.4	16.000	7.000	-P260	14H32	natural	54
135	461	116	461	1.2	25.000	7.000	-P260	14L32	natural	54
135	429	53	429	2.5	8.700	7.000	-P260	12H30	natural	54
135	429	71	429	1.9	9.500	7.000	-P260	14D30	forced	66
135	279	91	279	1.5	12.000	7.000	-P260	12L20	natural	54
135	236	114	236	1.2	12.000	7.000	-P260	12L17	forced	66
135	214	61	214	2.2	9.500	7.000	-P260	14D15	natural	54



Selection tables

1-stage gearboxes

Inverter operation						i	Product		Cooling	
$M_{2, max}$ [Nm]	$n_{2, th}$ [r/min]	M_2 [Nm]	$n_{2, eto}$ [r/min]	c	J [kgcm²]		g700	MCS		
135	214	67	214	2.0	8.700	7.000	-P260	12H15	natural	54
135	214	108	214	1.2	16.000	7.000	-P260	14H15	natural	54
135	193	81	193	1.7	9.500	7.000	-P260	14D14	forced	66
135	193	81	193	1.7	8.700	7.000	-P260	12H14	forced	66
155	625	39	625	3.6	12.000	4.000	-P260	12L41	natural	54
155	625	52	625	2.8	16.000	4.000	-P260	14H32	natural	54
155	625	52	625	2.8	12.000	4.000	-P260	12L39	forced	66
155	625	65	625	2.3	25.000	4.000	-P260	14L32	natural	54
155	625	81	625	1.9	69.000	4.000	-P260	19F30	natural	54
155	488	50	488	2.9	12.000	4.000	-P260	12L20	natural	54
155	413	64	413	2.3	12.000	4.000	-P260	12L17	forced	66
155	375	60	375	2.5	16.000	4.000	-P260	14H15	natural	54
155	375	88	375	1.7	25.000	4.000	-P260	14L15	natural	54
155	356	104	356	1.5	69.000	4.000	-P260	19F14	natural	54
179	250	67	250	5.6	22.000	4.000	-P800	14H28	forced	68
185	250	79	250	4.9	22.000	4.000	-P800	14H12	forced	68
186	300	55	300	5.9	36.000	3.000	-P800	14L15	natural	60
187	188	65	188	5.8	12.000	8.000	-P800	12H15	natural	60
190	194	69	194	5.5	12.000	8.000	-P800	12H34	forced	68
190	194	69	194	5.5	13.000	8.000	-P800	14D30	forced	68
191	300	63	300	5.3	36.000	3.000	-P800	14L30	forced	68
195	500	49	500	3.6	12.000	5.000	-P260	12L41	natural	54
195	500	65	500	2.8	16.000	5.000	-P260	14H32	natural	54
195	500	65	500	2.8	12.000	5.000	-P260	12L39	forced	66
195	500	81	500	2.3	25.000	5.000	-P260	14L32	natural	54
195	500	101	500	1.9	69.000	5.000	-P260	19F30	natural	54
195	390	62	390	3.0	12.000	5.000	-P260	12L20	natural	54
195	330	80	330	2.3	12.000	5.000	-P260	12L17	forced	66
195	300	75	300	2.5	16.000	5.000	-P260	14H15	natural	54
195	300	110	300	1.7	25.000	5.000	-P260	14L15	natural	54
195	285	130	285	1.5	69.000	5.000	-P260	19F14	natural	54
196	169	81	169	4.8	12.000	8.000	-P800	12H14	forced	68
196	169	81	169	4.8	13.000	8.000	-P800	14D14	forced	68
199	300	79	300	4.5	36.000	3.000	-P800	14L14	forced	68
216	300	68	300	5.0	77.000	3.000	-P800	19F14	natural	60
223	230	65	230	5.7	20.000	5.000	-P800	14H15	natural	60
225	300	85	300	4.2	77.000	3.000	-P800	19F29	forced	68
231	300	102	300	3.6	77.000	3.000	-P800	19F12	forced	68
232	230	70	230	5.4	17.000	5.000	-P800	12L17	forced	68
236	230	88	230	4.5	20.000	5.000	-P800	14H28	forced	68



Selection tables

1-stage gearboxes

Inverter operation						i	Product		Cooling	
$M_{2, max}$ [Nm]	$n_{2, th}$ [r/min]	M_2 [Nm]	$n_{2, eto}$ [r/min]	c	J [kgcm²]		g700	MCS		
242	230	104	230	3.9	20.000	5.000	-P800	14H12	forced	68
259	250	77	250	5.0	31.000	4.000	-P800	14L15	natural	60
265	250	88	250	4.5	31.000	4.000	-P800	14L30	forced	68
270	300	77	300	4.5	47.000	3.000	-P800	14P14	natural	60
274	250	109	250	3.8	31.000	4.000	-P800	14L14	forced	68
276	300	87	300	4.1	47.000	3.000	-P800	14P26	forced	68
283	250	69	250	5.5	73.000	4.000	-P800	19F30	natural	60
287	300	115	300	3.2	47.000	3.000	-P800	14P11	forced	68
299	250	94	250	4.3	73.000	4.000	-P800	19F14	natural	60
309	250	117	250	3.5	73.000	4.000	-P800	19F29	forced	68
316	250	140	250	3.0	73.000	4.000	-P800	19F12	forced	68
318	230	71	230	5.3	29.000	5.000	-P800	14L32	natural	60
330	300	74	300	4.7	117.000	3.000	-P800	19J30	natural	60
339	230	101	230	4.0	29.000	5.000	-P800	14L15	natural	60
345	250	69	250	5.5	42.000	4.000	-P800	14P32	natural	60
345	230	114	230	3.6	29.000	5.000	-P800	14L30	forced	68
350	300	108	300	3.4	117.000	3.000	-P800	19J14	natural	60
354	230	140	230	3.0	29.000	5.000	-P800	14L14	forced	68
361	300	141	300	2.7	117.000	3.000	-P800	19J29	forced	68
369	300	179	300	2.2	117.000	3.000	-P800	19J12	forced	68
371	194	73	194	5.3	15.000	8.000	-P800	12L41	natural	60
372	230	91	230	4.4	71.000	5.000	-P800	19F30	natural	60
373	250	106	250	3.8	42.000	4.000	-P800	14P14	natural	60
378	250	119	250	3.5	42.000	4.000	-P800	14P26	forced	68
385	194	98	194	4.1	19.000	8.000	-P800	14H32	natural	60
389	230	122	230	3.4	71.000	5.000	-P800	19F14	natural	60
389	194	94	194	4.3	15.000	8.000	-P800	12L20	natural	60
391	250	156	250	2.7	42.000	4.000	-P800	14P11	forced	68
394	194	98	194	4.1	15.000	8.000	-P800	12L39	forced	68
394	188	115	188	3.6	19.000	8.000	-P800	14H15	natural	60
399	230	151	230	2.8	71.000	5.000	-P800	19F29	forced	68
400	300	84	300	4.3	172.000	3.000	-P800	19P30	natural	60
400	300	143	300	2.7	172.000	3.000	-P800	19P14	natural	60
400	300	149	300	2.6	172.000	3.000	-P800	19P29	forced	68
400	300	207	300	1.9	172.000	3.000	-P800	19P12	forced	68
406	230	179	230	2.4	71.000	5.000	-P800	19F12	forced	68
406	194	152	194	2.8	19.000	8.000	-P800	14H28	forced	68
408	194	123	194	3.4	15.000	8.000	-P800	12L17	forced	68
413	150	177	150	2.5	19.000	8.000	-P800	14H12	forced	68
450	250	102	250	4.0	113.000	4.000	-P800	19J30	natural	60



Selection tables

1-stage gearboxes

Inverter operation						i	Product		Cooling	
$M_{2, max}$ [Nm]	$n_{2, th}$ [r/min]	M_2 [Nm]	$n_{2, eto}$ [r/min]	c	J [kgcm²]		g700	MCS		
450	250	115	250	3.6	168.000	4.000	-P800	19P30	natural	60
450	250	148	250	2.9	113.000	4.000	-P800	19J14	natural	60
450	250	192	250	2.3	113.000	4.000	-P800	19J29	forced	68
450	250	194	250	2.3	168.000	4.000	-P800	19P14	natural	60
450	250	202	250	2.2	168.000	4.000	-P800	19P29	forced	68
450	250	240	250	1.8	113.000	4.000	-P800	19J12	forced	68
450	250	276	250	1.6	168.000	4.000	-P800	19P12	forced	68
450	230	91	230	4.4	41.000	5.000	-P800	14P32	natural	60
450	230	132	230	3.2	111.000	5.000	-P800	19J30	natural	60
450	230	138	230	3.1	41.000	5.000	-P800	14P14	natural	60
450	230	148	230	2.9	166.000	5.000	-P800	19P30	natural	60
450	230	153	230	2.8	41.000	5.000	-P800	14P26	forced	68
450	230	190	230	2.3	111.000	5.000	-P800	19J14	natural	60
450	230	242	230	1.8	111.000	5.000	-P800	19J29	forced	68
450	230	245	230	1.8	166.000	5.000	-P800	19P14	natural	60
450	230	254	230	1.7	166.000	5.000	-P800	19P29	forced	68
450	230	300	230	1.5	111.000	5.000	-P800	19J12	forced	68
450	230	346	230	1.3	166.000	5.000	-P800	19P12	forced	68
450	210	200	210	2.2	41.000	5.000	-P800	14P11	forced	68
450	194	125	194	3.4	28.000	8.000	-P800	14L32	natural	60
450	194	156	194	2.8	70.000	8.000	-P800	19F30	natural	60
450	194	156	194	2.8	39.000	8.000	-P800	14P32	natural	60
450	194	194	194	2.3	28.000	8.000	-P800	14L30	forced	68
450	194	223	194	2.0	110.000	8.000	-P800	19J30	natural	60
450	194	246	194	1.8	165.000	8.000	-P800	19P30	natural	60
450	194	250	194	1.8	70.000	8.000	-P800	19F29	forced	68
450	194	253	194	1.8	39.000	8.000	-P800	14P26	forced	68
450	194	388	194	1.1	110.000	8.000	-P800	19J29	forced	68
450	194	407	194	1.1	165.000	8.000	-P800	19P29	forced	68
450	188	173	188	2.5	28.000	8.000	-P800	14L15	natural	60
450	178	206	178	2.1	70.000	8.000	-P800	19F14	natural	60
450	178	307	178	1.4	110.000	8.000	-P800	19J14	natural	60
450	169	230	169	1.9	39.000	8.000	-P800	14P14	natural	60
450	169	234	169	1.9	28.000	8.000	-P800	14L14	forced	68
450	169	392	169	1.1	165.000	8.000	-P800	19P14	natural	60
450	150	292	150	1.5	70.000	8.000	-P800	19F12	forced	68
450	131	323	131	1.4	39.000	8.000	-P800	14P11	forced	68



Selection tables

2-stage gearboxes

Inverter operation						i	Product		Cooling	
$M_{2, max}$ [Nm]	$n_{2, th}$ [r/min]	M_2 [Nm]	$n_{2, eto}$ [r/min]	c	J [kgcm²]		g700	MCS		
17	556	4	556	3.8	0.200	9.000	-P20	06C60	natural	45
17	450	5	450	3.2	0.200	9.000	-P20	06C41	natural	45
18	333	7	333	2.5	0.200	15.000	-P20	06C60	natural	45
18	270	8	270	2.1	0.200	15.000	-P20	06C41	natural	45
18	200	12	200	1.6	0.200	25.000	-P20	06C60	natural	45
18	162	14	162	1.3	0.200	25.000	-P20	06C41	natural	45
20	417	5	417	3.5	0.200	12.000	-P20	06C60	natural	45
20	338	6	338	2.9	0.200	12.000	-P20	06C41	natural	45
20	313	7	313	2.6	0.200	16.000	-P20	06C60	natural	45
20	253	9	253	2.2	0.200	16.000	-P20	06C41	natural	45
20	250	9	250	2.1	0.200	20.000	-P20	06C60	natural	45
20	203	11	203	1.8	0.200	20.000	-P20	06C41	natural	45
20	156	15	156	1.4	0.200	32.000	-P20	06C60	natural	45
20	127	18	127	1.1	0.200	32.000	-P20	06C41	natural	45
26	281	5	281	5.7	0.200	16.000	-P44	06C60	natural	47
26	270	7	270	5.1	0.200	15.000	-P44	06C41	natural	47
27	500	6	500	5.6	0.300	9.000	-P44	06F60	natural	47
29	253	7	253	4.8	0.200	16.000	-P44	06C41	natural	47
31	450	8	450	4.2	0.300	9.000	-P44	06F41	natural	47
36	225	8	225	4.6	0.200	20.000	-P44	06C60	natural	47
39	203	10	203	3.8	0.200	20.000	-P44	06C41	natural	47
40	180	11	180	3.4	0.200	25.000	-P44	06C60	natural	47
40	180	21	180	1.9	0.300	25.000	-P44	06F60	natural	47
40	180	28	180	1.4	0.400	25.000	-P44	06I60	natural	47
40	162	13	162	2.8	0.200	25.000	-P44	06C41	natural	47
40	162	28	162	1.4	0.300	25.000	-P44	06F41	natural	47
40	162	35	162	1.1	0.400	25.000	-P44	06I41	natural	47
40	113	19	113	2.1	0.200	40.000	-P44	06C60	natural	47
40	113	34	113	1.2	0.300	40.000	-P44	06F60	natural	47
40	101	23	101	1.8	0.200	40.000	-P44	06C41	natural	47
41	375	8	375	4.2	0.300	12.000	-P44	06F60	natural	47
44	500	8	500	4.2	0.400	9.000	-P44	06I60	natural	47
44	500	14	500	2.8	1.200	9.000	-P44	09D60	natural	47
44	500	20	500	2.1	1.600	9.000	-P44	09F60	natural	47
44	450	11	450	3.4	0.400	9.000	-P44	06I41	natural	47
44	450	19	450	2.2	1.200	9.000	-P44	09D41	natural	47
44	417	26	417	1.6	1.600	9.000	-P44	09F38	natural	47
44	375	12	375	3.2	0.400	12.000	-P44	06I60	natural	47
44	375	20	375	2.1	1.200	12.000	-P44	09D60	natural	47
44	375	27	375	1.6	1.600	12.000	-P44	09F60	natural	47



Selection tables

2-stage gearboxes

Inverter operation						i	Product		Cooling	
$M_{2, max}$ [Nm]	$n_{2, th}$ [r/min]	M_2 [Nm]	$n_{2, eto}$ [r/min]	c	J [kgcm²]		g700	MCS		
44	338	12	338	3.2	0.300	12.000	-P44	06F41	natural	47
44	338	16	338	2.5	0.400	12.000	-P44	06I41	natural	47
44	338	26	338	1.7	1.200	12.000	-P44	09D41	natural	47
44	313	35	313	1.2	1.600	12.000	-P44	09F38	natural	47
44	300	11	300	3.4	0.300	15.000	-P44	06F60	natural	47
44	300	16	300	2.5	0.400	15.000	-P44	06I60	natural	47
44	300	25	300	1.7	1.100	15.000	-P44	09D60	natural	47
44	300	34	300	1.3	1.600	15.000	-P44	09F60	natural	47
44	281	12	281	3.2	0.300	16.000	-P44	06F60	natural	47
44	281	18	281	2.4	0.400	16.000	-P44	06I60	natural	47
44	281	27	281	1.6	1.200	16.000	-P44	09D60	natural	47
44	281	36	281	1.2	1.600	16.000	-P44	09F60	natural	47
44	270	16	270	2.5	0.300	15.000	-P44	06F41	natural	47
44	270	21	270	2.0	0.400	15.000	-P44	06I41	natural	47
44	270	32	270	1.3	1.100	15.000	-P44	09D41	natural	47
44	253	18	253	2.4	0.300	16.000	-P44	06F41	natural	47
44	253	23	253	1.9	0.400	16.000	-P44	06I41	natural	47
44	253	35	253	1.3	1.200	16.000	-P44	09D41	natural	47
44	225	16	225	2.5	0.300	20.000	-P44	06F60	natural	47
44	225	23	225	1.9	0.400	20.000	-P44	06I60	natural	47
44	225	34	225	1.3	1.100	20.000	-P44	09D60	natural	47
44	203	23	203	1.9	0.300	20.000	-P44	06F41	natural	47
44	203	28	203	1.5	0.400	20.000	-P44	06I41	natural	47
44	141	14	141	2.9	0.200	32.000	-P44	06C60	natural	47
44	141	27	141	1.6	0.300	32.000	-P44	06F60	natural	47
44	141	36	141	1.2	0.400	32.000	-P44	06I60	natural	47
44	127	17	127	2.4	0.200	32.000	-P44	06C41	natural	47
44	127	36	127	1.2	0.300	32.000	-P44	06F41	natural	47
50	63	28	63	1.8	0.700	64.000	-P130	06C60	natural	51
50	63	34	63	1.5	0.700	64.000	-P130	06C41	natural	51
63	200	17	200	5.2	0.700	20.000	-P130	06F41	natural	51
64	100	13	100	5.8	0.500	40.000	-P130	06C60	natural	51
67	267	16	267	5.1	1.000	15.000	-P130	06I41	natural	51
71	250	17	250	5.2	0.800	16.000	-P130	06I41	natural	51
71	100	18	100	4.9	0.500	40.000	-P130	06C41	natural	51
77	313	15	313	5.7	1.800	12.000	-P130	09D60	natural	51
79	160	16	160	5.2	0.700	25.000	-P130	06F60	natural	51
87	313	21	313	4.5	1.800	12.000	-P130	09D41	natural	51
89	200	17	200	5.2	0.700	20.000	-P130	06I60	natural	51
89	160	24	160	3.9	0.700	25.000	-P130	06F41	natural	51



Selection tables

2-stage gearboxes

Inverter operation						i	Product		Cooling	
$M_{2, max}$ [Nm]	$n_{2, th}$ [r/min]	M_2 [Nm]	$n_{2, eto}$ [r/min]	c	J [kgcm²]		g700	MCS		
98	200	24	200	4.2	0.700	20.000	-P130	06I41	natural	51
100	417	21	417	4.8	1.900	9.000	-P130	09F38	natural	51
109	125	22	125	4.4	0.600	32.000	-P130	06F60	natural	51
110	267	21	267	4.2	1.800	15.000	-P130	09D60	natural	51
110	267	29	267	3.3	1.800	15.000	-P130	09D41	natural	51
110	267	31	267	3.2	2.200	15.000	-P130	09F60	natural	51
110	267	41	267	2.5	2.600	15.000	-P130	09H60	natural	51
110	267	50	267	2.1	3.500	15.000	-P130	09L51	natural	51
110	267	54	267	2.0	2.600	15.000	-P130	09H41	natural	51
110	267	61	267	1.8	4.700	15.000	-P130	12D41	natural	51
110	267	63	267	1.7	3.500	15.000	-P130	09L41	natural	51
110	250	42	250	2.5	2.200	15.000	-P130	09F38	natural	51
110	235	85	235	1.3	4.700	15.000	-P130	12D35	forced	65
110	235	106	235	1.0	8.000	15.000	-P130	12H35	natural	51
110	160	24	160	3.9	0.700	25.000	-P130	06I60	natural	51
110	160	32	160	3.1	0.700	25.000	-P130	06I41	natural	51
110	160	40	160	2.6	1.500	25.000	-P130	09D60	natural	51
110	160	54	160	2.0	1.500	25.000	-P130	09D41	natural	51
110	160	56	160	1.9	1.900	25.000	-P130	09F60	natural	51
110	160	71	160	1.5	2.300	25.000	-P130	09H60	natural	51
110	160	85	160	1.3	3.200	25.000	-P130	09L51	natural	51
110	160	89	160	1.2	2.300	25.000	-P130	09H41	natural	51
110	160	101	160	1.1	4.400	25.000	-P130	12D41	natural	51
110	160	106	160	1.0	3.200	25.000	-P130	09L41	natural	51
110	150	73	150	1.5	1.900	25.000	-P130	09F38	natural	51
110	130	78	130	1.4	4.700	15.000	-P130	12D20	natural	51
110	110	99	110	1.1	4.700	15.000	-P130	12D17	forced	65
110	100	31	100	3.3	0.600	40.000	-P130	06F60	natural	51
110	100	44	100	2.4	0.600	40.000	-P130	06F41	natural	51
110	100	44	100	2.4	0.700	40.000	-P130	06I60	natural	51
110	100	56	100	1.9	0.700	40.000	-P130	06I41	natural	51
110	100	68	100	1.6	1.500	40.000	-P130	09D60	natural	51
110	100	86	100	1.3	1.500	40.000	-P130	09D41	natural	51
110	100	90	100	1.2	1.900	40.000	-P130	09F60	natural	51
112	389	27	389	5.6	5.300	9.000	-P260	12D41	natural	56
118	250	22	250	4.3	1.600	16.000	-P130	09D60	natural	51
120	313	22	313	4.3	2.200	12.000	-P130	09F60	natural	51
120	313	30	313	3.4	2.600	12.000	-P130	09H60	natural	51
120	313	32	313	3.3	2.200	12.000	-P130	09F38	natural	51
120	313	38	313	2.9	3.500	12.000	-P130	09L51	natural	51



Selection tables

2-stage gearboxes

Inverter operation						i	Product		Cooling	
$M_{2, max}$ [Nm]	$n_{2, th}$ [r/min]	M_2 [Nm]	$n_{2, eto}$ [r/min]	c	J [kgcm²]		g700	MCS		
120	313	41	313	2.7	2.600	12.000	-P130	09H41	natural	51
120	313	47	313	2.4	4.700	12.000	-P130	12D41	natural	51
120	313	50	313	2.3	3.500	12.000	-P130	09L41	natural	51
120	294	68	294	1.7	4.700	12.000	-P130	12D35	forced	65
120	294	85	294	1.4	8.000	12.000	-P130	12H35	natural	51
120	250	31	250	3.4	1.600	16.000	-P130	09D41	natural	51
120	250	33	250	3.3	2.000	16.000	-P130	09F60	natural	51
120	250	43	250	2.6	2.400	16.000	-P130	09H60	natural	51
120	250	53	250	2.2	3.300	16.000	-P130	09L51	natural	51
120	250	57	250	2.1	2.400	16.000	-P130	09H41	natural	51
120	250	65	250	1.8	4.500	16.000	-P130	12D41	natural	51
120	250	68	250	1.7	3.300	16.000	-P130	09L41	natural	51
120	250	90	250	1.3	8.000	12.000	-P130	12H30	natural	51
120	234	45	234	2.5	2.000	16.000	-P130	09F38	natural	51
120	220	90	220	1.3	4.500	16.000	-P130	12D35	forced	65
120	220	113	220	1.0	7.800	16.000	-P130	12H35	natural	51
120	200	30	200	3.5	1.500	20.000	-P130	09D60	natural	51
120	200	41	200	2.7	1.500	20.000	-P130	09D41	natural	51
120	200	43	200	2.6	1.900	20.000	-P130	09F60	natural	51
120	200	56	200	2.1	2.300	20.000	-P130	09H60	natural	51
120	200	68	200	1.7	3.200	20.000	-P130	09L51	natural	51
120	200	71	200	1.6	2.300	20.000	-P130	09H41	natural	51
120	200	81	200	1.4	4.400	20.000	-P130	12D41	natural	51
120	200	85	200	1.4	3.200	20.000	-P130	09L41	natural	51
120	188	58	188	2.0	1.900	20.000	-P130	09F38	natural	51
120	176	113	176	1.0	4.400	20.000	-P130	12D35	forced	65
120	163	62	163	1.9	4.700	12.000	-P130	12D20	natural	51
120	138	79	138	1.5	4.700	12.000	-P130	12D17	forced	65
120	125	33	125	3.3	0.600	32.000	-P130	06F41	natural	51
120	125	33	125	3.3	0.700	32.000	-P130	06I60	natural	51
120	125	43	125	2.6	0.700	32.000	-P130	06I41	natural	51
120	125	53	125	2.2	1.500	32.000	-P130	09D60	natural	51
120	125	69	125	1.7	1.500	32.000	-P130	09D41	natural	51
120	125	72	125	1.6	1.900	32.000	-P130	09F60	natural	51
120	125	90	125	1.3	2.300	32.000	-P130	09H60	natural	51
120	125	108	125	1.1	3.200	32.000	-P130	09L51	natural	51
120	125	113	125	1.0	8.000	12.000	-P130	12H15	natural	51
120	125	114	125	1.0	2.300	32.000	-P130	09H41	natural	51
120	122	83	122	1.4	4.500	16.000	-P130	12D20	natural	51
120	117	93	117	1.3	1.900	32.000	-P130	09F38	natural	51



Selection tables

2-stage gearboxes

Inverter operation						i	Product		Cooling	
$M_{2, max}$ [Nm]	$n_{2, th}$ [r/min]	M_2 [Nm]	$n_{2, eto}$ [r/min]	c	J [kgcm²]		g700	MCS		
120	103	105	103	1.1	4.500	16.000	-P130	12D17	forced	65
120	98	103	98	1.1	4.400	20.000	-P130	12D20	natural	51
120	55	25	55	4.2	2.700	64.000	-P260	06C60	natural	56
120	55	32	55	3.5	2.700	64.000	-P260	06C41	natural	56
120	55	51	55	2.3	2.800	64.000	-P260	06F60	natural	56
120	55	68	55	1.8	2.900	64.000	-P260	06I60	natural	56
120	55	68	55	1.8	2.800	64.000	-P260	06F41	natural	56
120	55	85	55	1.4	2.900	64.000	-P260	06I41	natural	56
120	55	103	55	1.2	3.700	64.000	-P260	09D60	natural	56
125	217	38	217	4.4	5.300	9.000	-P260	12D20	natural	56
127	389	43	389	4.0	5.300	9.000	-P260	12D35	forced	67
127	175	31	175	5.9	2.600	20.000	-P260	09D41	natural	56
127	88	35	88	5.1	1.600	40.000	-P260	06F41	natural	56
130	444	20	444	5.0	2.300	9.000	-P130	09H60	natural	51
130	444	26	444	4.1	3.200	9.000	-P130	09L51	natural	51
130	444	28	444	3.9	2.300	9.000	-P130	09H41	natural	51
130	444	32	444	3.5	4.400	9.000	-P130	12D41	natural	51
130	444	34	444	3.3	3.200	9.000	-P130	09L41	natural	51
130	392	49	392	2.5	4.400	9.000	-P130	12D35	forced	65
130	392	63	392	2.0	7.700	9.000	-P130	12H35	natural	51
130	333	68	333	1.9	7.700	9.000	-P130	12H30	natural	51
130	217	44	217	2.7	4.400	9.000	-P130	12D20	natural	51
130	183	59	183	2.1	4.400	9.000	-P130	12D17	forced	65
130	167	85	167	1.5	7.700	9.000	-P130	12H15	natural	51
134	183	53	183	3.4	5.300	9.000	-P260	12D17	forced	67
135	109	33	109	5.7	1.600	32.000	-P260	06I41	natural	56
154	221	37	221	5.3	6.600	12.000	-P260	12D41	natural	56
159	221	30	221	5.9	4.500	12.000	-P260	09H41	natural	56
162	213	33	213	5.2	4.100	15.000	-P260	09F38	natural	56
167	194	35	194	5.5	3.300	16.000	-P260	09F38	natural	56
167	140	32	140	5.4	2.600	25.000	-P260	09D60	natural	56
171	163	52	163	4.1	6.600	12.000	-P260	12D20	natural	56
173	221	59	221	3.8	6.600	12.000	-P260	12D35	forced	67
179	88	35	88	5.1	1.600	40.000	-P260	06I60	natural	56
181	138	72	138	3.2	6.600	12.000	-P260	12D17	forced	67
186	140	45	140	4.2	2.600	25.000	-P260	09D41	natural	56
197	88	48	88	4.1	1.600	40.000	-P260	06I41	natural	56
203	389	29	389	5.3	4.100	9.000	-P260	09L41	natural	56
206	175	33	175	5.6	3.000	20.000	-P260	09F60	natural	56
210	389	58	389	3.2	8.600	9.000	-P260	12H35	natural	56



Selection tables

2-stage gearboxes

Inverter operation						i	Product		Cooling	
$M_{2, max}$ [Nm]	$n_{2, th}$ [r/min]	M_2 [Nm]	$n_{2, eto}$ [r/min]	c	J [kgcm²]		g700	MCS		
210	389	58	389	3.2	9.300	9.000	-P260	14D36	natural	56
210	389	92	389	2.2	12.000	9.000	-P260	12L41	natural	56
210	389	118	389	1.7	12.000	9.000	-P260	12L39	forced	67
210	375	87	375	2.3	8.600	9.000	-P260	12H34	forced	67
210	358	118	358	1.7	15.000	9.000	-P260	14H32	natural	56
210	358	146	358	1.4	25.000	9.000	-P260	14L32	natural	56
210	333	63	333	3.0	8.600	9.000	-P260	12H30	natural	56
210	333	87	333	2.3	9.300	9.000	-P260	14D30	forced	67
210	333	178	333	1.1	69.000	9.000	-P260	19F30	natural	56
210	217	114	217	1.8	12.000	9.000	-P260	12L20	natural	56
210	183	144	183	1.4	12.000	9.000	-P260	12L17	forced	67
210	167	74	167	2.6	9.300	9.000	-P260	14D15	natural	56
210	167	82	167	2.4	8.600	9.000	-P260	12H15	natural	56
210	167	135	167	1.5	15.000	9.000	-P260	14H15	natural	56
210	167	195	167	1.1	25.000	9.000	-P260	14L15	natural	56
210	150	101	150	2.0	8.600	9.000	-P260	12H14	forced	67
210	150	101	150	2.0	9.300	9.000	-P260	14D14	forced	67
212	213	32	213	5.3	4.500	15.000	-P260	09H60	natural	56
219	194	33	194	5.6	3.700	16.000	-P260	09H60	natural	56
221	213	53	213	3.7	6.500	15.000	-P260	12D41	natural	56
227	109	43	109	4.8	2.400	32.000	-P260	09D60	natural	56
230	213	42	213	4.4	5.400	15.000	-P260	09L51	natural	56
230	213	45	213	4.2	4.500	15.000	-P260	09H41	natural	56
230	213	56	213	3.5	5.400	15.000	-P260	09L41	natural	56
230	213	80	213	2.7	6.500	15.000	-P260	12D35	forced	67
230	213	105	213	2.1	9.800	15.000	-P260	12H35	natural	56
230	213	105	213	2.1	11.000	15.000	-P260	14D36	natural	56
230	213	148	213	1.5	9.800	15.000	-P260	12H34	forced	67
230	213	155	213	1.4	13.000	15.000	-P260	12L41	natural	56
230	213	197	213	1.1	13.000	15.000	-P260	12L39	forced	67
230	213	197	213	1.1	17.000	15.000	-P260	14H32	natural	56
230	200	113	200	2.0	9.800	15.000	-P260	12H30	natural	56
230	200	148	200	1.5	11.000	15.000	-P260	14D30	forced	67
230	140	48	140	4.0	3.000	25.000	-P260	09F60	natural	56
230	140	64	140	3.2	3.400	25.000	-P260	09H60	natural	56
230	140	67	140	3.1	3.000	25.000	-P260	09F38	natural	56
230	140	80	140	2.7	4.300	25.000	-P260	09L51	natural	56
230	140	86	140	2.5	3.400	25.000	-P260	09H41	natural	56
230	140	99	140	2.3	5.500	25.000	-P260	12D41	natural	56
230	140	105	140	2.1	4.300	25.000	-P260	09L41	natural	56



Selection tables

2-stage gearboxes

Inverter operation						i	Product		Cooling	
$M_{2, max}$ [Nm]	$n_{2, th}$ [r/min]	M_2 [Nm]	$n_{2, eto}$ [r/min]	c	J [kgcm²]		g700	MCS		
230	140	141	140	1.6	5.500	25.000	-P260	12D35	forced	67
230	140	176	140	1.3	8.800	25.000	-P260	12H35	natural	56
230	140	176	140	1.3	9.500	25.000	-P260	14D36	natural	56
230	130	72	130	2.9	6.500	15.000	-P260	12D20	natural	56
230	130	190	130	1.2	13.000	15.000	-P260	12L20	natural	56
230	120	188	120	1.2	8.800	25.000	-P260	12H30	natural	56
230	110	97	110	2.3	6.500	15.000	-P260	12D17	forced	67
230	100	130	100	1.7	11.000	15.000	-P260	14D15	natural	56
230	100	141	100	1.6	9.800	15.000	-P260	12H15	natural	56
230	90	169	90	1.3	9.800	15.000	-P260	12H14	forced	67
230	90	169	90	1.3	11.000	15.000	-P260	14D14	forced	67
230	88	61	88	3.4	2.400	40.000	-P260	09D60	natural	56
230	88	82	88	2.7	2.400	40.000	-P260	09D41	natural	56
230	88	87	88	2.5	2.800	40.000	-P260	09F60	natural	56
230	88	112	88	2.0	3.200	40.000	-P260	09H60	natural	56
230	88	117	88	2.0	2.800	40.000	-P260	09F38	natural	56
230	88	135	88	1.7	4.100	40.000	-P260	09L51	natural	56
230	88	143	88	1.6	3.200	40.000	-P260	09H41	natural	56
230	88	162	88	1.4	5.300	40.000	-P260	12D41	natural	56
230	88	169	88	1.4	4.100	40.000	-P260	09L41	natural	56
230	88	226	88	1.0	5.300	40.000	-P260	12D35	forced	67
230	78	129	78	1.8	5.500	25.000	-P260	12D20	natural	56
230	66	165	66	1.4	5.500	25.000	-P260	12D17	forced	67
230	60	216	60	1.1	9.500	25.000	-P260	14D15	natural	56
230	49	207	49	1.1	5.300	40.000	-P260	12D20	natural	56
232	194	55	194	3.9	5.800	16.000	-P260	12D41	natural	56
232	175	48	175	4.4	3.000	20.000	-P260	09F38	natural	56
235	83	97	83	5.8	20.000	12.000	-P800	14D14	forced	70
235	83	97	83	5.8	20.000	12.000	-P800	12H14	forced	70
235	70	93	70	6.0	11.000	20.000	-P800	12D17	forced	70
246	194	47	194	4.5	3.700	16.000	-P260	09H41	natural	56
249	122	76	122	3.1	5.800	16.000	-P260	12D20	natural	56
249	109	60	109	3.7	2.400	32.000	-P260	09D41	natural	56
250	194	85	194	2.8	5.800	16.000	-P260	12D35	forced	67
258	103	102	103	2.4	5.800	16.000	-P260	12D17	forced	67
260	221	39	221	5.0	5.400	12.000	-P260	09L41	natural	56
260	221	78	221	3.0	9.900	12.000	-P260	12H35	natural	56
260	221	78	221	3.0	11.000	12.000	-P260	14D36	natural	56
260	221	85	221	2.8	9.900	12.000	-P260	12H30	natural	56
260	221	117	221	2.1	9.900	12.000	-P260	12H34	forced	67



Selection tables

2-stage gearboxes

Inverter operation						i	Product		Cooling	
$M_{2, max}$ [Nm]	$n_{2, th}$ [r/min]	M_2 [Nm]	$n_{2, eto}$ [r/min]	c	J [kgcm²]		g700	MCS		
260	221	117	221	2.1	11.000	12.000	-P260	14D30	forced	67
260	221	124	221	2.0	13.000	12.000	-P260	12L41	natural	56
260	221	158	221	1.6	13.000	12.000	-P260	12L39	forced	67
260	221	158	221	1.6	17.000	12.000	-P260	14H32	natural	56
260	221	194	221	1.3	26.000	12.000	-P260	14L32	natural	56
260	221	237	221	1.1	70.000	12.000	-P260	19F30	natural	56
260	194	43	194	4.7	4.600	16.000	-P260	09L51	natural	56
260	194	59	194	3.8	4.600	16.000	-P260	09L41	natural	56
260	194	111	194	2.3	9.100	16.000	-P260	12H35	natural	56
260	194	111	194	2.3	9.800	16.000	-P260	14D36	natural	56
260	194	158	194	1.6	9.100	16.000	-P260	12H34	forced	67
260	194	165	194	1.5	12.000	16.000	-P260	12L41	natural	56
260	194	211	194	1.2	12.000	16.000	-P260	12L39	forced	67
260	194	211	194	1.2	16.000	16.000	-P260	14H32	natural	56
260	188	119	188	2.1	9.100	16.000	-P260	12H30	natural	56
260	188	158	188	1.6	9.800	16.000	-P260	14D30	forced	67
260	175	46	175	4.5	3.400	20.000	-P260	09H60	natural	56
260	175	59	175	3.8	4.300	20.000	-P260	09L51	natural	56
260	175	63	175	3.6	3.400	20.000	-P260	09H41	natural	56
260	175	74	175	3.1	5.500	20.000	-P260	12D41	natural	56
260	175	78	175	3.0	4.300	20.000	-P260	09L41	natural	56
260	175	111	175	2.3	5.500	20.000	-P260	12D35	forced	67
260	175	141	175	1.8	8.800	20.000	-P260	12H35	natural	56
260	175	141	175	1.8	9.500	20.000	-P260	14D36	natural	56
260	175	207	175	1.2	12.000	20.000	-P260	12L41	natural	56
260	169	197	169	1.3	8.800	20.000	-P260	12H34	forced	67
260	163	152	163	1.7	13.000	12.000	-P260	12L20	natural	56
260	150	150	150	1.7	8.800	20.000	-P260	12H30	natural	56
260	150	197	150	1.3	9.500	20.000	-P260	14D30	forced	67
260	138	192	138	1.3	13.000	12.000	-P260	12L17	forced	67
260	125	100	125	2.5	11.000	12.000	-P260	14D15	natural	56
260	125	111	125	2.3	9.900	12.000	-P260	12H15	natural	56
260	125	180	125	1.4	17.000	12.000	-P260	14H15	natural	56
260	122	203	122	1.3	12.000	16.000	-P260	12L20	natural	56
260	113	135	113	1.9	9.900	12.000	-P260	12H14	forced	67
260	113	135	113	1.9	11.000	12.000	-P260	14D14	forced	67
260	109	64	109	3.6	2.800	32.000	-P260	09F60	natural	56
260	109	85	109	2.9	3.200	32.000	-P260	09H60	natural	56
260	109	88	109	2.8	2.800	32.000	-P260	09F38	natural	56
260	109	105	109	2.4	4.100	32.000	-P260	09L51	natural	56



Selection tables

2-stage gearboxes

Inverter operation						i	Product		Cooling	
$M_{2, max}$ [Nm]	$n_{2, th}$ [r/min]	M_2 [Nm]	$n_{2, eto}$ [r/min]	c	J [kgcm²]		g700	MCS		
260	109	112	109	2.3	3.200	32.000	-P260	09H41	natural	56
260	109	129	109	2.0	5.300	32.000	-P260	12D41	natural	56
260	109	135	109	1.9	4.100	32.000	-P260	09L41	natural	56
260	109	180	109	1.4	5.300	32.000	-P260	12D35	forced	67
260	109	226	109	1.1	8.600	32.000	-P260	12H35	natural	56
260	109	226	109	1.1	9.300	32.000	-P260	14D36	natural	56
260	98	100	98	2.5	5.500	20.000	-P260	12D20	natural	56
260	98	254	98	1.0	12.000	20.000	-P260	12L20	natural	56
260	94	138	94	1.8	9.800	16.000	-P260	14D15	natural	56
260	94	150	94	1.7	9.100	16.000	-P260	12H15	natural	56
260	94	241	94	1.1	8.600	32.000	-P260	12H30	natural	56
260	94	241	94	1.1	16.000	16.000	-P260	14H15	natural	56
260	84	180	84	1.4	9.100	16.000	-P260	12H14	forced	67
260	84	180	84	1.4	9.800	16.000	-P260	14D14	forced	67
260	83	132	83	1.9	5.500	20.000	-P260	12D17	forced	67
260	75	173	75	1.5	9.500	20.000	-P260	14D15	natural	56
260	75	188	75	1.4	8.800	20.000	-P260	12H15	natural	56
260	68	226	68	1.1	8.800	20.000	-P260	12H14	forced	67
260	68	226	68	1.1	9.500	20.000	-P260	14D14	forced	67
260	61	165	61	1.6	5.300	32.000	-P260	12D20	natural	56
260	52	211	52	1.2	5.300	32.000	-P260	12D17	forced	67
309	87	98	87	5.3	20.000	15.000	-P800	14D15	natural	62
317	75	101	75	5.7	16.000	16.000	-P800	14D15	natural	62
317	68	97	68	5.4	9.900	25.000	-P800	12D20	natural	62
322	87	111	87	4.9	20.000	15.000	-P800	12H15	natural	62
326	68	110	68	4.9	9.900	25.000	-P800	12D35	forced	70
329	87	119	87	4.6	20.000	15.000	-P800	14D30	forced	70
329	87	119	87	4.6	20.000	15.000	-P800	12H34	forced	70
332	75	114	75	5.2	15.000	16.000	-P800	12H15	natural	62
340	75	123	75	5.0	16.000	16.000	-P800	14D30	forced	70
340	75	123	75	5.0	15.000	16.000	-P800	12H34	forced	70
346	87	143	87	4.0	20.000	15.000	-P800	14D14	forced	70
346	87	143	87	4.0	20.000	15.000	-P800	12H14	forced	70
347	66	137	66	4.2	9.900	25.000	-P800	12D17	forced	70
360	75	149	75	4.3	16.000	16.000	-P800	14D14	forced	70
360	75	149	75	4.3	15.000	16.000	-P800	12H14	forced	70
401	70	104	70	5.6	14.000	20.000	-P800	12H35	natural	62
401	70	104	70	5.6	15.000	20.000	-P800	14D36	natural	62
415	70	114	70	5.2	14.000	20.000	-P800	12H30	natural	62
429	59	131	59	4.8	10.000	32.000	-P800	12D20	natural	62



Selection tables

2-stage gearboxes

Inverter operation						i	Product		Cooling	
$M_{2, max}$ [Nm]	$n_{2, th}$ [r/min]	M_2 [Nm]	$n_{2, eto}$ [r/min]	c	J [kgcm²]		g700	MCS		
438	59	148	59	4.4	10.000	32.000	-P800	12D35	forced	70
443	70	140	70	4.5	15.000	20.000	-P800	14D15	natural	62
450	47	248	47	1.8	8.600	64.000	-P800	12D41	natural	62
450	47	346	47	1.3	8.600	64.000	-P800	12D35	forced	70
450	47	432	47	1.0	12.000	64.000	-P800	12H35	natural	62
450	47	432	47	1.0	13.000	64.000	-P800	14D36	natural	62
450	31	317	31	1.4	8.600	64.000	-P800	12D20	natural	62
450	26	403	26	1.1	8.600	64.000	-P800	12D17	forced	70
457	70	158	70	4.2	14.000	20.000	-P800	12H15	natural	62
463	52	183	52	3.8	10.000	32.000	-P800	12D17	forced	70
465	70	168	70	4.0	15.000	20.000	-P800	14D30	forced	70
465	70	168	70	4.0	14.000	20.000	-P800	12H34	forced	70
484	83	117	83	5.1	23.000	12.000	-P800	12L20	natural	62
484	83	123	83	5.0	27.000	12.000	-P800	14H32	natural	62
485	68	201	68	3.5	15.000	20.000	-P800	14D14	forced	70
485	68	201	68	3.5	14.000	20.000	-P800	12H14	forced	70
496	83	123	83	5.0	23.000	12.000	-P800	12L39	forced	70
512	83	149	83	4.3	27.000	12.000	-P800	14H15	natural	62
537	83	162	83	4.1	23.000	12.000	-P800	12L17	forced	70
554	83	207	83	3.4	27.000	12.000	-P800	14H28	forced	70
559	58	134	58	4.3	9.400	40.000	-P800	12D41	natural	62
574	83	246	83	3.0	27.000	12.000	-P800	14H12	forced	70
584	68	151	68	3.9	13.000	25.000	-P800	12H35	natural	62
584	68	151	68	3.9	14.000	25.000	-P800	14D36	natural	62
596	68	164	68	3.7	13.000	25.000	-P800	12H30	natural	62
607	49	185	49	3.4	9.400	40.000	-P800	12D20	natural	62
611	58	207	58	3.1	9.400	40.000	-P800	12D35	forced	70
620	60	197	60	3.2	14.000	25.000	-P800	14D15	natural	62
633	60	218	60	3.0	13.000	25.000	-P800	12H15	natural	62
633	41	250	41	2.7	9.400	40.000	-P800	12D17	forced	70
641	68	232	68	2.8	14.000	25.000	-P800	14D30	forced	70
641	68	232	68	2.8	13.000	25.000	-P800	12H34	forced	70
647	87	127	87	4.4	23.000	15.000	-P800	12L41	natural	62
658	54	272	54	2.5	14.000	25.000	-P800	14D14	forced	70
658	54	272	54	2.5	13.000	25.000	-P800	12H14	forced	70
671	75	132	75	4.7	18.000	16.000	-P800	12L41	natural	62
690	87	176	87	3.5	27.000	15.000	-P800	14H32	natural	62
695	87	168	87	3.6	23.000	15.000	-P800	12L20	natural	62
700	87	176	87	3.5	23.000	15.000	-P800	12L39	forced	70
700	87	208	87	3.0	27.000	15.000	-P800	14H15	natural	62



Selection tables

2-stage gearboxes

Inverter operation						i	Product		Cooling	
$M_{2, max}$ [Nm]	$n_{2, th}$ [r/min]	M_2 [Nm]	$n_{2, eto}$ [r/min]	c	J [kgcm²]		g700	MCS		
700	87	224	87	2.9	23.000	15.000	-P800	12L17	forced	70
700	87	228	87	2.8	36.000	15.000	-P800	14L32	natural	62
700	87	281	87	2.4	27.000	15.000	-P800	14H28	forced	70
700	87	289	87	2.3	47.000	15.000	-P800	14P32	natural	62
700	87	289	87	2.3	77.000	15.000	-P800	19F30	natural	62
700	87	322	87	2.1	36.000	15.000	-P800	14L15	natural	62
700	87	360	87	1.9	36.000	15.000	-P800	14L30	forced	70
700	87	381	87	1.8	77.000	15.000	-P800	19F14	natural	62
700	87	409	87	1.7	117.000	15.000	-P800	19J30	natural	62
700	87	423	87	1.6	47.000	15.000	-P800	14P14	natural	62
700	87	430	87	1.6	36.000	15.000	-P800	14L14	forced	70
700	87	451	87	1.5	172.000	15.000	-P800	19P30	natural	62
700	87	458	87	1.5	77.000	15.000	-P800	19F29	forced	70
700	87	465	87	1.5	47.000	15.000	-P800	14P26	forced	70
700	87	564	87	1.2	117.000	15.000	-P800	19J14	natural	62
700	80	330	80	2.1	27.000	15.000	-P800	14H12	forced	70
700	80	536	80	1.3	77.000	15.000	-P800	19F12	forced	70
700	70	592	70	1.2	47.000	15.000	-P800	14P11	forced	70
700	68	245	68	2.7	16.000	25.000	-P800	12L41	natural	62
700	68	313	68	2.2	16.000	25.000	-P800	12L20	natural	62
700	68	326	68	2.1	16.000	25.000	-P800	12L39	forced	70
700	68	326	68	2.1	20.000	25.000	-P800	14H32	natural	62
700	68	404	68	1.7	29.000	25.000	-P800	14L32	natural	62
700	68	482	68	1.4	20.000	25.000	-P800	14H28	forced	70
700	68	494	68	1.4	41.000	25.000	-P800	14P32	natural	62
700	68	494	68	1.4	71.000	25.000	-P800	19F30	natural	62
700	68	599	68	1.2	29.000	25.000	-P800	14L30	forced	70
700	68	682	68	1.0	111.000	25.000	-P800	19J30	natural	62
700	66	400	66	1.7	16.000	25.000	-P800	12L17	forced	70
700	60	376	60	1.8	20.000	25.000	-P800	14H15	natural	62
700	60	541	60	1.3	29.000	25.000	-P800	14L15	natural	62
700	58	272	58	2.5	13.000	40.000	-P800	12H35	natural	62
700	58	272	58	2.5	13.000	40.000	-P800	14D36	natural	62
700	58	293	58	2.3	13.000	40.000	-P800	12H30	natural	62
700	58	395	58	1.8	13.000	40.000	-P800	14D30	forced	70
700	58	395	58	1.8	13.000	40.000	-P800	12H34	forced	70
700	58	414	58	1.7	16.000	40.000	-P800	12L41	natural	62
700	58	526	58	1.3	16.000	40.000	-P800	12L39	forced	70
700	58	526	58	1.3	19.000	40.000	-P800	14H32	natural	62
700	58	647	58	1.1	29.000	40.000	-P800	14L32	natural	62



Selection tables

2-stage gearboxes

Inverter operation						i	Product		Cooling	
$M_{2, max}$ [Nm]	$n_{2, th}$ [r/min]	M_2 [Nm]	$n_{2, eto}$ [r/min]	c	J [kgcm²]		g700	MCS		
700	57	635	57	1.1	71.000	25.000	-P800	19F14	natural	62
700	49	508	49	1.4	16.000	40.000	-P800	12L20	natural	62
700	48	552	48	1.3	20.000	25.000	-P800	14H12	forced	70
700	41	639	41	1.1	16.000	40.000	-P800	12L17	forced	70
700	38	345	38	2.0	13.000	40.000	-P800	14D15	natural	62
700	38	376	38	1.9	13.000	40.000	-P800	12H15	natural	62
700	38	602	38	1.2	19.000	40.000	-P800	14H15	natural	62
700	34	451	34	1.6	13.000	40.000	-P800	14D14	forced	70
700	34	451	34	1.6	13.000	40.000	-P800	12H14	forced	70
721	75	184	75	3.7	22.000	16.000	-P800	14H32	natural	62
726	75	175	75	3.9	18.000	16.000	-P800	12L20	natural	62
737	83	165	83	4.0	36.000	12.000	-P800	14L32	natural	62
740	75	184	75	3.7	18.000	16.000	-P800	12L39	forced	70
750	75	218	75	3.3	22.000	16.000	-P800	14H15	natural	62
774	59	200	59	3.5	14.000	32.000	-P800	12H35	natural	62
774	59	200	59	3.5	14.000	32.000	-P800	14D36	natural	62
781	75	235	75	3.1	18.000	16.000	-P800	12L17	forced	70
789	59	218	59	3.3	14.000	32.000	-P800	12H30	natural	62
791	75	296	75	2.5	22.000	16.000	-P800	14H28	forced	70
800	83	214	83	3.3	47.000	12.000	-P800	14P32	natural	62
800	83	214	83	3.3	77.000	12.000	-P800	19F30	natural	62
800	83	240	83	3.0	36.000	12.000	-P800	14L15	natural	62
800	83	272	83	2.7	36.000	12.000	-P800	14L30	forced	70
800	83	292	83	2.6	77.000	12.000	-P800	19F14	natural	62
800	83	318	83	2.4	117.000	12.000	-P800	19J30	natural	62
800	83	330	83	2.3	47.000	12.000	-P800	14P14	natural	62
800	83	337	83	2.3	36.000	12.000	-P800	14L14	forced	70
800	83	356	83	2.2	172.000	12.000	-P800	19P30	natural	62
800	83	363	83	2.1	77.000	12.000	-P800	19F29	forced	70
800	83	369	83	2.1	47.000	12.000	-P800	14P26	forced	70
800	83	429	83	1.8	77.000	12.000	-P800	19F12	forced	70
800	83	451	83	1.7	117.000	12.000	-P800	19J14	natural	62
800	83	474	83	1.6	47.000	12.000	-P800	14P11	forced	70
800	83	570	83	1.4	117.000	12.000	-P800	19J29	forced	70
800	83	575	83	1.4	172.000	12.000	-P800	19P14	natural	62
800	83	598	83	1.3	172.000	12.000	-P800	19P29	forced	70
800	83	705	83	1.1	117.000	12.000	-P800	19J12	forced	70
800	75	239	75	3.0	31.000	16.000	-P800	14L32	natural	62
800	75	305	75	2.5	42.000	16.000	-P800	14P32	natural	62
800	75	305	75	2.5	72.000	16.000	-P800	19F30	natural	62



Selection tables

2-stage gearboxes

Inverter operation						i	Product		Cooling	
$M_{2, max}$ [Nm]	$n_{2, th}$ [r/min]	M_2 [Nm]	$n_{2, eto}$ [r/min]	c	J [kgcm²]		g700	MCS		
800	75	339	75	2.3	31.000	16.000	-P800	14L15	natural	62
800	75	348	75	2.2	22.000	16.000	-P800	14H12	forced	70
800	75	382	75	2.0	31.000	16.000	-P800	14L30	forced	70
800	75	406	75	1.9	72.000	16.000	-P800	19F14	natural	62
800	75	436	75	1.8	112.000	16.000	-P800	19J30	natural	62
800	75	451	75	1.7	42.000	16.000	-P800	14P14	natural	62
800	75	459	75	1.7	31.000	16.000	-P800	14L14	forced	70
800	75	481	75	1.6	167.000	16.000	-P800	19P30	natural	62
800	75	489	75	1.6	72.000	16.000	-P800	19F29	forced	70
800	75	496	75	1.6	42.000	16.000	-P800	14P26	forced	70
800	75	572	75	1.4	72.000	16.000	-P800	19F12	forced	70
800	75	602	75	1.3	112.000	16.000	-P800	19J14	natural	62
800	75	760	75	1.0	112.000	16.000	-P800	19J29	forced	70
800	75	767	75	1.0	167.000	16.000	-P800	19P14	natural	62
800	70	179	70	3.8	17.000	20.000	-P800	12L41	natural	62
800	70	233	70	3.1	17.000	20.000	-P800	12L20	natural	62
800	70	244	70	3.0	17.000	20.000	-P800	12L39	forced	70
800	70	244	70	3.0	21.000	20.000	-P800	14H32	natural	62
800	70	287	70	2.6	21.000	20.000	-P800	14H15	natural	62
800	70	309	70	2.5	17.000	20.000	-P800	12L17	forced	70
800	70	313	70	2.4	30.000	20.000	-P800	14L32	natural	62
800	70	384	70	2.0	21.000	20.000	-P800	14H28	forced	70
800	70	395	70	2.0	41.000	20.000	-P800	14P32	natural	62
800	70	395	70	2.0	72.000	20.000	-P800	19F30	natural	62
800	70	432	70	1.8	30.000	20.000	-P800	14L15	natural	62
800	70	479	70	1.6	30.000	20.000	-P800	14L30	forced	70
800	70	508	70	1.5	72.000	20.000	-P800	19F14	natural	62
800	70	545	70	1.4	112.000	20.000	-P800	19J30	natural	62
800	70	602	70	1.3	167.000	20.000	-P800	19P30	natural	62
800	70	611	70	1.3	72.000	20.000	-P800	19F29	forced	70
800	70	620	70	1.3	41.000	20.000	-P800	14P26	forced	70
800	70	752	70	1.0	112.000	20.000	-P800	19J14	natural	62
800	68	564	68	1.4	41.000	20.000	-P800	14P14	natural	62
800	68	573	68	1.4	30.000	20.000	-P800	14L14	forced	70
800	66	632	66	1.2	42.000	16.000	-P800	14P11	forced	70
800	60	442	60	1.8	21.000	20.000	-P800	14H12	forced	70
800	60	714	60	1.1	72.000	20.000	-P800	19F12	forced	70
800	59	304	59	2.5	14.000	32.000	-P800	14D30	forced	70
800	59	304	59	2.5	14.000	32.000	-P800	12H34	forced	70
800	59	321	59	2.4	17.000	32.000	-P800	12L41	natural	62



Selection tables

2-stage gearboxes

Inverter operation						i	Product		Cooling	
$M_{2, max}$ [Nm]	$n_{2, th}$ [r/min]	M_2 [Nm]	$n_{2, eto}$ [r/min]	c	J [kgcm²]		g700	MCS		
800	59	406	59	1.9	17.000	32.000	-P800	12L20	natural	62
800	59	421	59	1.9	17.000	32.000	-P800	12L39	forced	70
800	59	421	59	1.9	21.000	32.000	-P800	14H32	natural	62
800	59	517	59	1.5	30.000	32.000	-P800	14L32	natural	62
800	59	617	59	1.3	21.000	32.000	-P800	14H28	forced	70
800	59	632	59	1.3	41.000	32.000	-P800	14P32	natural	62
800	59	632	59	1.3	71.000	32.000	-P800	19F30	natural	62
800	59	767	59	1.0	30.000	32.000	-P800	14L30	forced	70
800	52	511	52	1.6	17.000	32.000	-P800	12L17	forced	70
800	47	259	47	2.9	14.000	32.000	-P800	14D15	natural	62
800	47	287	47	2.6	14.000	32.000	-P800	12H15	natural	62
800	47	481	47	1.6	21.000	32.000	-P800	14H15	natural	62
800	47	692	47	1.1	30.000	32.000	-P800	14L15	natural	62
800	42	356	42	2.2	14.000	32.000	-P800	14D14	forced	70
800	42	356	42	2.2	14.000	32.000	-P800	12H14	forced	70
800	38	707	38	1.1	21.000	32.000	-P800	14H12	forced	70



Selection tables

3-stage gearboxes

Inverter operation						i	Product		Cooling	
$M_{2, max}$ [Nm]	$n_{2, th}$ [r/min]	M_2 [Nm]	$n_{2, eto}$ [r/min]	c	J [kgcm²]		g700	MCS		
44	75	27	75	1.6	0.200	60.000	-P44	06C60	natural	47
44	68	32	68	1.3	0.200	60.000	-P44	06C41	natural	48
44	56	36	56	1.2	0.200	80.000	-P44	06C60	natural	47
44	51	43	51	1.0	0.200	80.000	-P44	06C41	natural	48
101	67	21	67	4.0	0.500	60.000	-P130	06C60	natural	53
110	67	28	67	3.3	0.500	60.000	-P130	06C41	natural	53
110	67	47	67	2.2	0.600	60.000	-P130	06F60	natural	53
110	67	65	67	1.7	0.600	60.000	-P130	06F41	natural	53
110	67	65	67	1.7	0.700	60.000	-P130	06I60	natural	53
110	67	81	67	1.3	0.700	60.000	-P130	06I41	natural	53
110	67	97	67	1.1	1.500	60.000	-P130	09D60	natural	53
110	33	53	33	2.1	0.800	120.000	-P130	06C60	natural	53
110	33	64	33	1.7	0.800	120.000	-P130	06C41	natural	53
110	33	96	33	1.1	0.900	120.000	-P130	06F60	natural	53
110	20	85	20	1.3	0.500	200.000	-P130	06C60	natural	53
110	20	102	20	1.1	0.500	200.000	-P130	06C41	natural	53
120	50	31	50	3.3	0.600	80.000	-P130	06C60	natural	53
120	50	40	50	2.8	0.600	80.000	-P130	06C41	natural	53
120	50	65	50	1.8	0.700	80.000	-P130	06F60	natural	53
120	50	86	50	1.4	0.700	80.000	-P130	06F41	natural	53
120	50	86	50	1.4	0.800	80.000	-P130	06I60	natural	53
120	50	108	50	1.1	0.800	80.000	-P130	06I41	natural	53
120	40	42	40	2.7	0.600	100.000	-P130	06C60	natural	53
120	40	53	40	2.2	0.600	100.000	-P130	06C41	natural	53
120	40	81	40	1.5	0.700	100.000	-P130	06F60	natural	53
120	40	108	40	1.1	0.700	100.000	-P130	06F41	natural	53
120	40	108	40	1.1	0.700	100.000	-P130	06I60	natural	53
120	25	70	25	1.7	0.500	160.000	-P130	06C60	natural	53
120	25	84	25	1.4	0.500	160.000	-P130	06C41	natural	53
120	16	108	16	1.1	0.500	256.000	-P130	06C60	natural	53
152	58	31	58	5.2	1.600	60.000	-P260	06F60	natural	58
187	58	51	58	3.9	1.600	60.000	-P260	06F41	natural	58
230	29	92	29	2.5	2.800	120.000	-P260	06F60	natural	58
230	29	125	29	1.8	2.800	120.000	-P260	06F41	natural	58
230	29	125	29	1.8	2.800	120.000	-P260	06I60	natural	58
230	29	157	29	1.5	2.800	120.000	-P260	06I41	natural	58
230	29	188	29	1.2	3.600	120.000	-P260	09D60	natural	58
230	18	101	18	2.3	1.500	200.000	-P260	06C41	natural	58
230	18	151	18	1.5	1.600	200.000	-P260	06F60	natural	58
230	18	202	18	1.1	1.600	200.000	-P260	06F41	natural	58



Selection tables

3-stage gearboxes

Inverter operation						i	Product		Cooling	
$M_{2, max}$ [Nm]	$n_{2, th}$ [r/min]	M_2 [Nm]	$n_{2, eto}$ [r/min]	c	J [kgcm²]		g700	MCS		
230	18	202	18	1.1	1.600	200.000	-P260	06I60	natural	58
230	11	126	11	1.8	1.500	320.000	-P260	06C60	natural	58
230	11	152	11	1.5	1.500	320.000	-P260	06C41	natural	58
230	11	228	11	1.0	1.600	320.000	-P260	06F60	natural	58
248	44	51	44	4.0	1.800	80.000	-P260	06F60	natural	58
260	58	51	58	3.9	1.600	60.000	-P260	06I60	natural	58
260	58	71	58	3.1	1.600	60.000	-P260	06I41	natural	58
260	58	91	58	2.6	2.400	60.000	-P260	09D60	natural	58
260	58	124	58	2.0	2.400	60.000	-P260	09D41	natural	58
260	58	130	58	2.0	2.800	60.000	-P260	09F60	natural	58
260	58	162	58	1.6	3.200	60.000	-P260	09H60	natural	58
260	58	167	58	1.5	2.800	60.000	-P260	09F38	natural	58
260	58	194	58	1.3	4.100	60.000	-P260	09L51	natural	58
260	58	205	58	1.2	3.200	60.000	-P260	09H41	natural	58
260	58	232	58	1.1	5.300	60.000	-P260	12D41	natural	58
260	58	243	58	1.1	4.100	60.000	-P260	09L41	natural	58
260	44	77	44	3.0	1.800	80.000	-P260	06F41	natural	58
260	44	77	44	3.0	1.800	80.000	-P260	06I60	natural	58
260	44	103	44	2.4	1.800	80.000	-P260	06I41	natural	58
260	44	130	44	2.0	2.600	80.000	-P260	09D60	natural	58
260	44	166	44	1.6	2.600	80.000	-P260	09D41	natural	58
260	44	173	44	1.5	3.000	80.000	-P260	09F60	natural	58
260	44	216	44	1.2	3.400	80.000	-P260	09H60	natural	58
260	44	223	44	1.1	3.000	80.000	-P260	09F38	natural	58
260	35	70	35	3.2	1.700	100.000	-P260	06F60	natural	58
260	35	103	35	2.4	1.700	100.000	-P260	06F41	natural	58
260	35	103	35	2.4	1.800	100.000	-P260	06I60	natural	58
260	35	135	35	1.9	1.800	100.000	-P260	06I41	natural	58
260	35	162	35	1.6	2.600	100.000	-P260	09D60	natural	58
260	35	207	35	1.3	2.600	100.000	-P260	09D41	natural	58
260	35	216	35	1.2	3.000	100.000	-P260	09F60	natural	58
260	22	76	22	3.1	1.500	160.000	-P260	06C41	natural	58
260	22	125	22	2.1	1.600	160.000	-P260	06F60	natural	58
260	22	167	22	1.6	1.600	160.000	-P260	06F41	natural	58
260	22	167	22	1.6	1.600	160.000	-P260	06I60	natural	58
260	22	209	22	1.3	1.600	160.000	-P260	06I41	natural	58
260	22	251	22	1.0	2.400	160.000	-P260	09D60	natural	58
260	14	106	14	2.5	1.500	256.000	-P260	06C60	natural	58
260	14	127	14	2.0	1.500	256.000	-P260	06C41	natural	58
260	14	191	14	1.4	1.600	256.000	-P260	06F60	natural	58



Selection tables

3-stage gearboxes

Inverter operation						i	Product		Cooling	
$M_{2, max}$ [Nm]	$n_{2, th}$ [r/min]	M_2 [Nm]	$n_{2, eto}$ [r/min]	c	J [kgcm²]		g700	MCS		
260	14	255	14	1.0	1.600	256.000	-P260	06F41	natural	58
260	14	255	14	1.0	1.600	256.000	-P260	06I60	natural	58



Dimensions, notes

Notes on the dimensions

The following legend shows the layout of the dimension sheets.

Product gearbox

g700-P44

Driven shaft design

Abmessungen mit Vollwelle

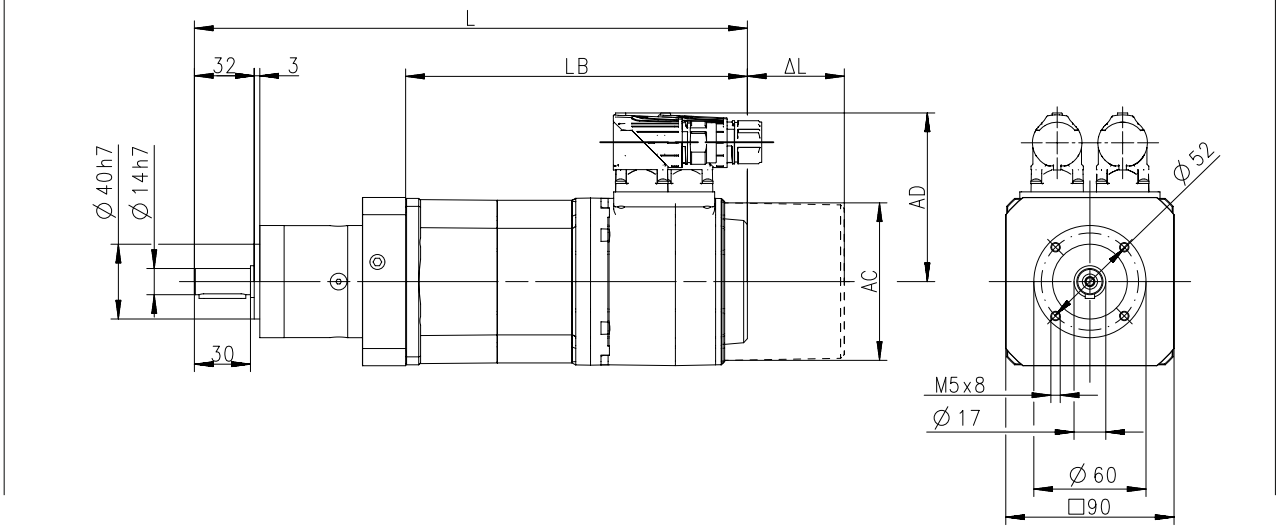

Product Motor

Produkt			MCS				
			06C41	06F41	06I41	09D41	09F38
Abmessungen							
Gesamtlänge	**L**	**[mm]**	~~238~~	268	298	296	316
Länge Motor	**LB**	**[mm]**	~~132~~	162	192	183	203
Länge Motoranbauten	**Δ L**	**[mm]**	100			71	
Motordurchmesser	**AC**	**[mm]**	86			89	
Abstand Motor/Anschluss	**AD**	**[mm]**	77			89.7	

Distance of motor centre to the end of connector

Total length of the drive without built-on accessories

Motor diameter

Motor length without built-on accessories

Additional length of the built-on accessories (longest version)



Dimensions, self-ventilated motors

g700-P20, 1-stage gearboxes

Dimensions with solid shaft and Flange

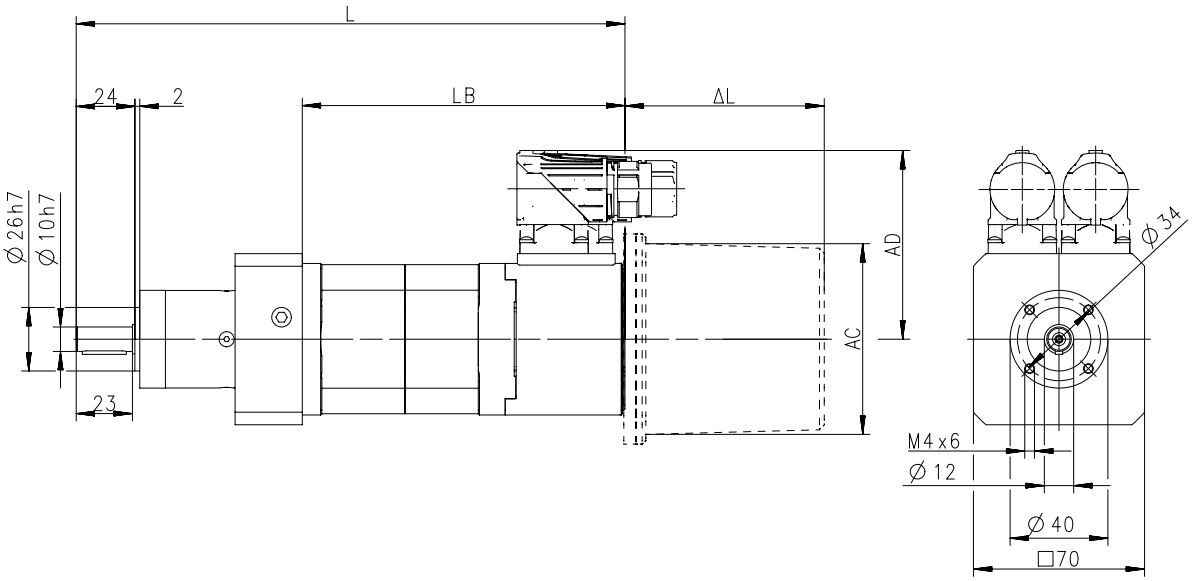

Product			MCS	
			06C41	06C60
Length				
Total length	**L**	**[mm]**	225	
Motor length	**LB**	**[mm]**	132	
Length of motor options	**Δ L**	**[mm]**	100	
Motor diameter	**AC**	**[mm]**	86	
Distance motor/connection	**AD**	**[mm]**	77	



Dimensions, self-ventilated motors

g700-P20, 2-stage gearboxes

Dimensions with solid shaft and Flange

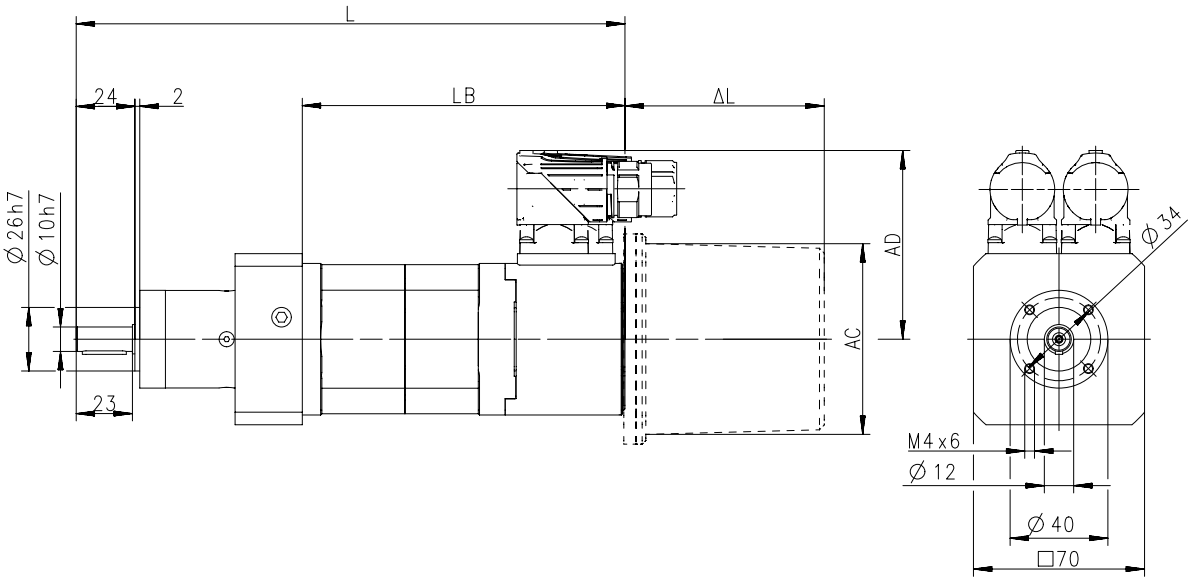

Product			MCS	
			06C41	06C60
Length				
Total length	**L**	**[mm]**	238	
Motor length	**LB**	**[mm]**	132	
Length of motor options	**Δ L**	**[mm]**	100	
Motor diameter	**AC**	**[mm]**	86	
Distance motor/connection	**AD**	**[mm]**	77	



Dimensions, self-ventilated motors

g700-P44, 1-stage gearboxes

Dimensions with solid shaft and Flange

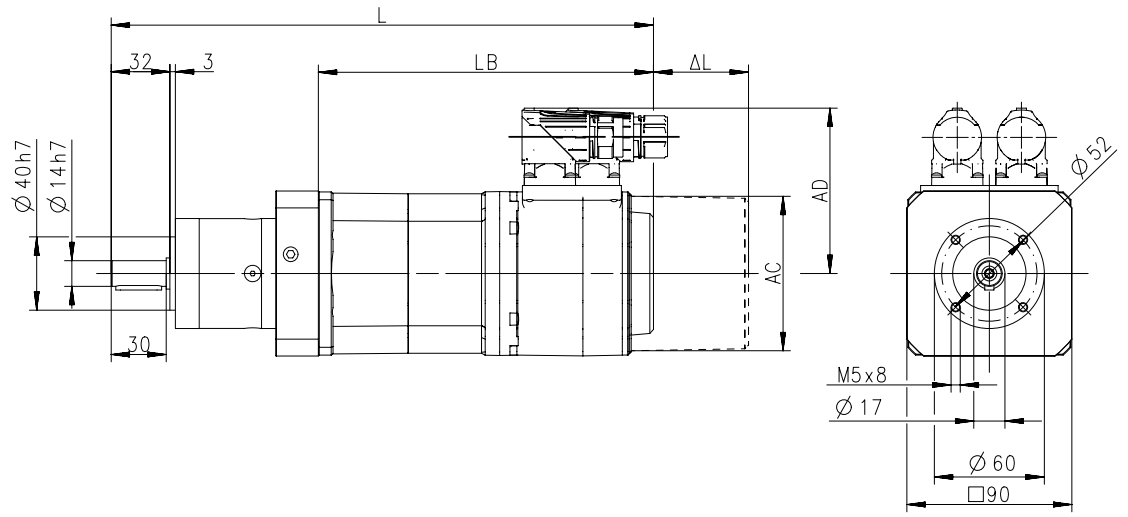

Product			MCS									
			06C41	06C60	06F41	06F60	06I41	06I60	09D41	09D60	09F38	09F60
Length												
Total length	**L**	**[mm]**	238		268		298		296		316	
Motor length	**LB**	**[mm]**	132		162		192		183		203	
Length of motor options	**Δ L**	**[mm]**	100						71			
Motor diameter	**AC**	**[mm]**	86						89			
Distance motor/connection	**AD**	**[mm]**	77						89.7			

6.1.1



Dimensions, self-ventilated motors

g700-P44, 2-stage gearboxes

Dimensions with solid shaft and Flange

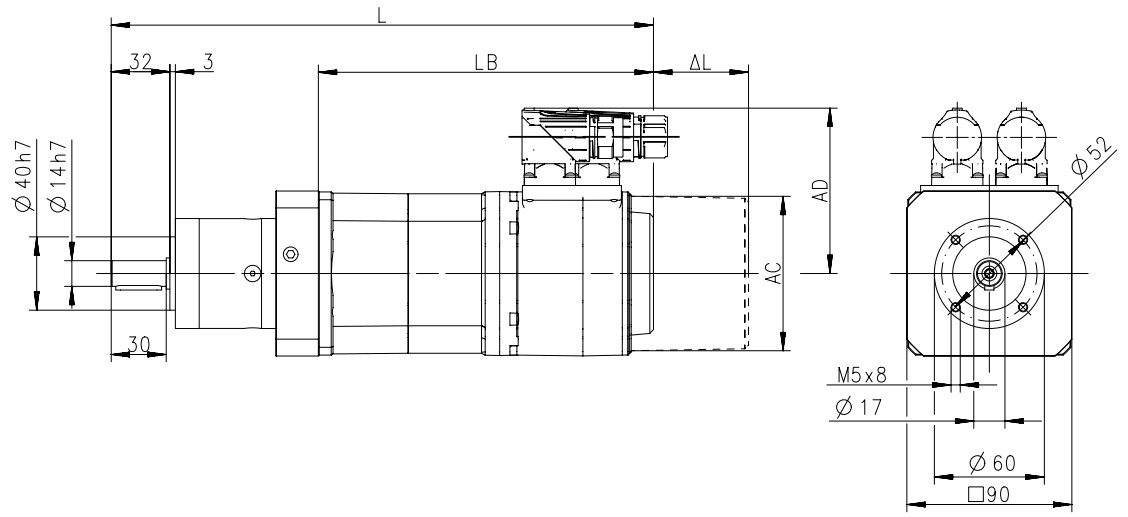

Product			MCS									
			06C41	06C60	06F41	06F60	06I41	06I60	09D41	09D60	09F38	09F60
Length												
Total length	**L**	**[mm]**	251	251 263	281		311		309		329	
Motor length	**LB**	**[mm]**	132		162		192		183		203	
Length of motor options	**Δ L**	**[mm]**	100						71			
Motor diameter	**AC**	**[mm]**	86						89			
Distance motor/connection	**AD**	**[mm]**	77						89.7			



Dimensions, self-ventilated motors

g700-P44, 3-stage gearboxes

Dimensions with solid shaft and Flange

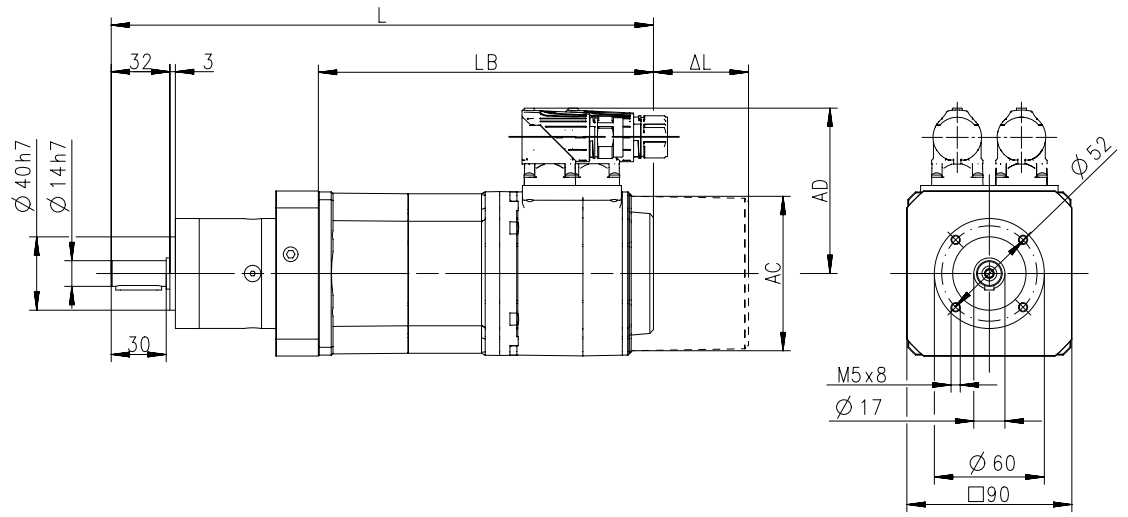

Product			MCS
			06C41
Length			
Total length	**L**	**[mm]**	263
Motor length	**LB**	**[mm]**	132
Length of motor options	**Δ L**	**[mm]**	100
Motor diameter	**AC**	**[mm]**	86
Distance motor/connection	**AD**	**[mm]**	77

6.1.1



Dimensions, self-ventilated motors

g700-P130, 1-stage gearboxes

Dimensions with solid shaft and Flange

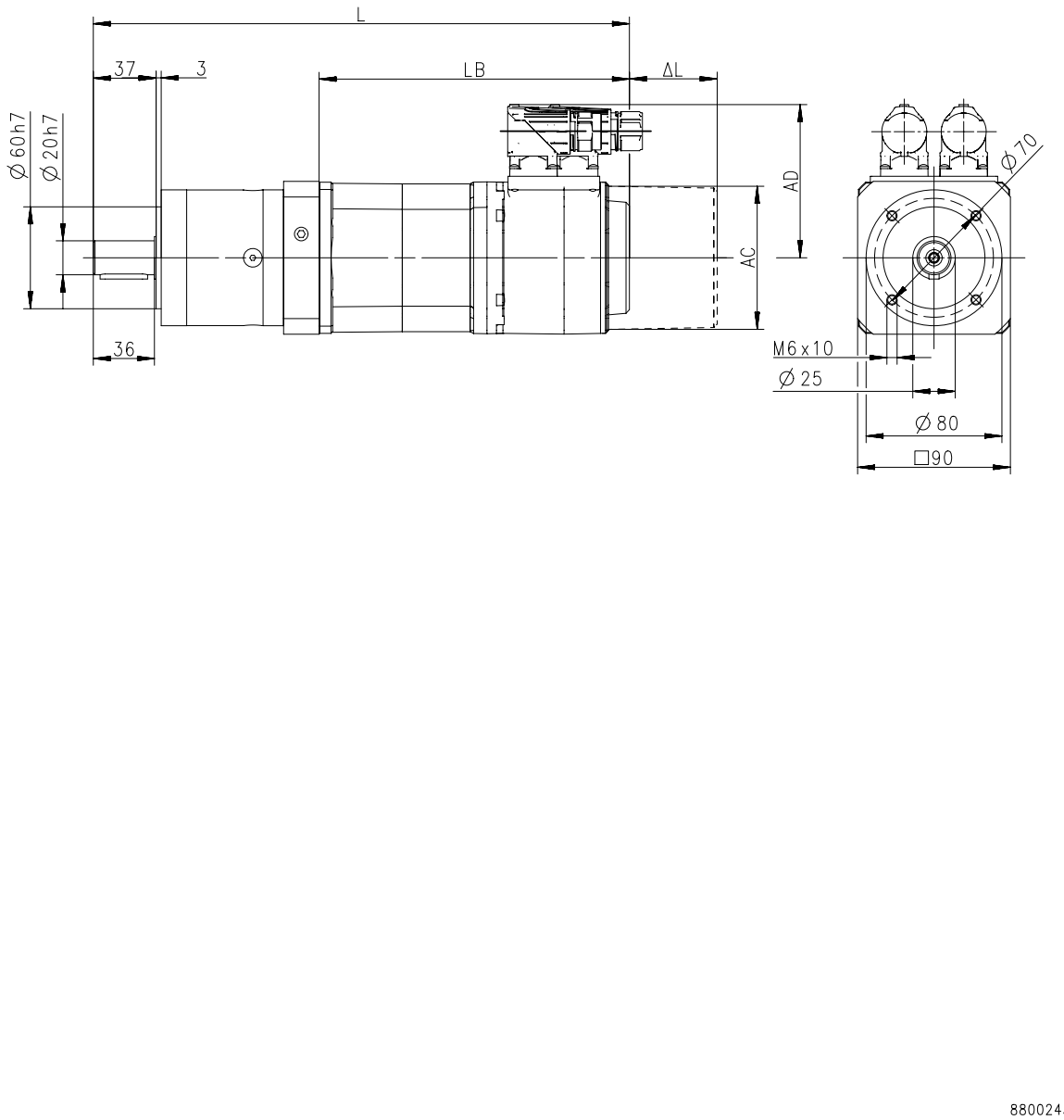

Product			MCS							
			06F41	06F60	06I41	06I60	09D41	09D60	09F38	09F60
Length										
Total length	**L**	**[mm]**	295		325		316		336	
Motor length	**LB**	**[mm]**	162		192		183		203	
Length of motor options	**Δ L**	**[mm]**	100				71			
Motor diameter	**AC**	**[mm]**	86				89			
Distance motor/connection	**AD**	**[mm]**	77				89.7			



Dimensions, self-ventilated motors

g700-P130, 1-stage gearboxes

Dimensions with solid shaft and Flange

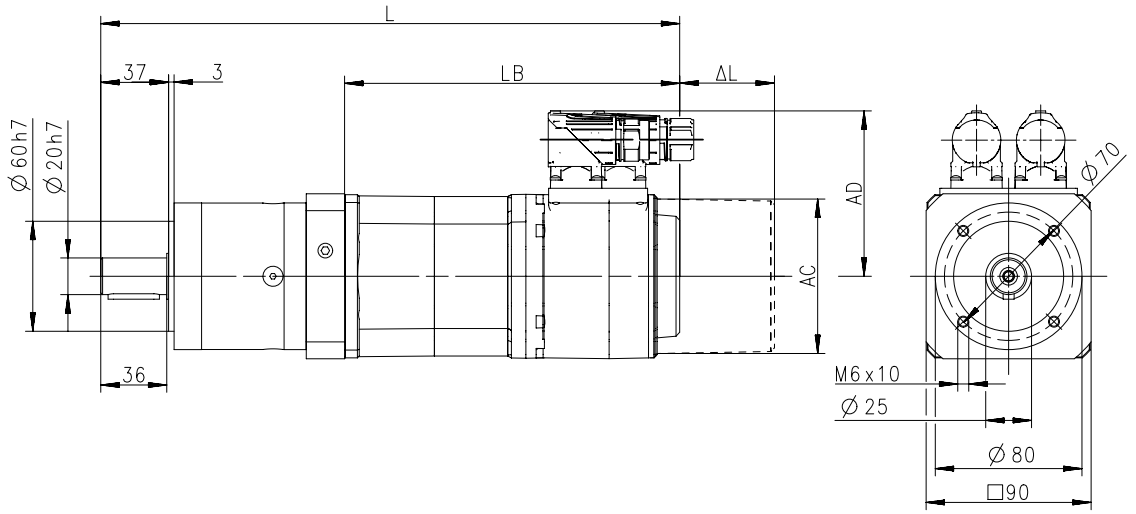

Product			MCS								
			09H41	09H60	09L41	09L51	12D20	12D41	12H15	12H30	12H35
Length											
Total length	**L**	**[mm]**	356		396		331		371		
Motor length	**LB**	**[mm]**	223		263		188		228		
Length of motor options	**Δ L**	**[mm]**	71				69				
Motor diameter	**AC**	**[mm]**	89				116				
Distance motor/connection	**AD**	**[mm]**	89.7				105				



Dimensions, self-ventilated motors

g700-P130, 2-stage gearboxes

Dimensions with solid shaft and Flange

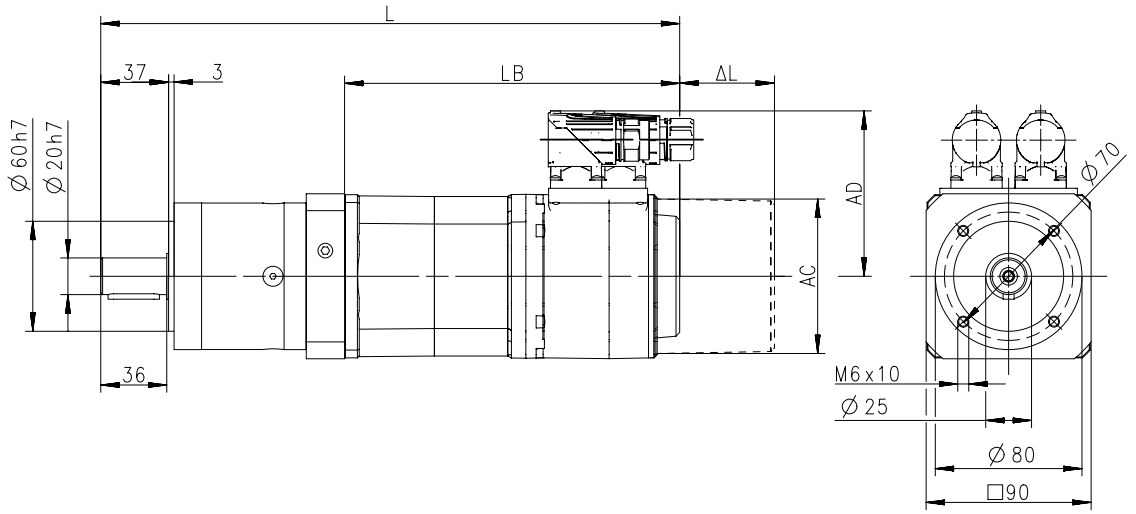

Product			MCS								
			06C41	06C60	06F41	06F60	06I41	06I60	09D41	09D60	09F38
Length											
Total length	**L**	**[mm]**	283		313		343		334		354
Motor length	**LB**	**[mm]**	132		162		192		183		203
Length of motor options	**Δ L**	**[mm]**	100						71		
Motor diameter	**AC**	**[mm]**	86						89		
Distance motor/connection	**AD**	**[mm]**	77						89.7		



Dimensions, self-ventilated motors

g700-P130, 2-stage gearboxes

Dimensions with solid shaft and Flange

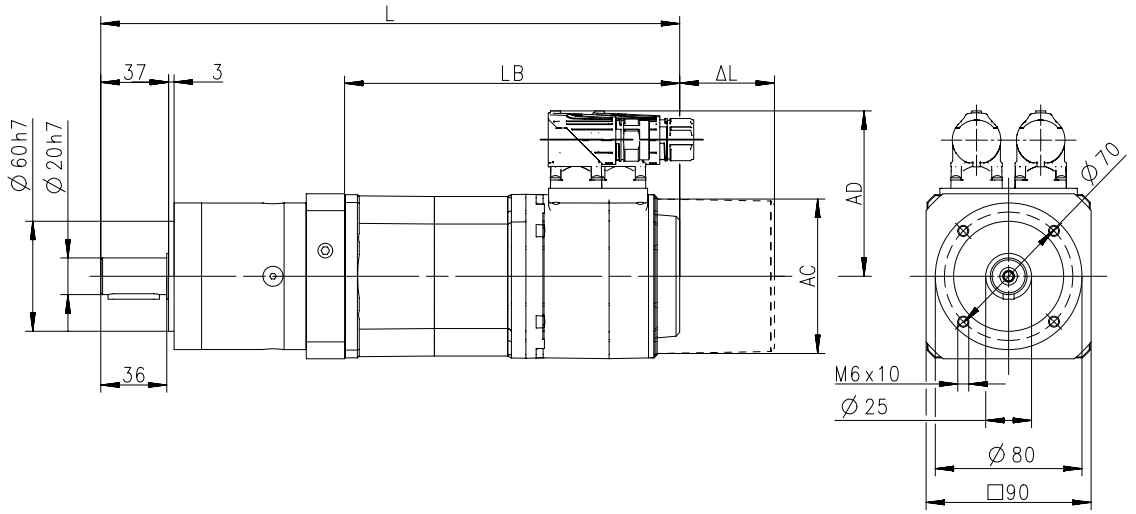

Product			MCS									
			09F60	09H41	09H60	09L41	09L51	12D20	12D41	12H15	12H30	12H35
Length												
Total length	**L**	**[mm]**	354	374		414		349		389		
Motor length	**LB**	**[mm]**	203	223		263		188		228		
Length of motor options	**Δ L**	**[mm]**	71					69				
Motor diameter	**AC**	**[mm]**	89					116				
Distance motor/connection	**AD**	**[mm]**	89.7					105				

6.1.1



Dimensions, self-ventilated motors

g700-P130, 3-stage gearboxes

Dimensions with solid shaft and Flange

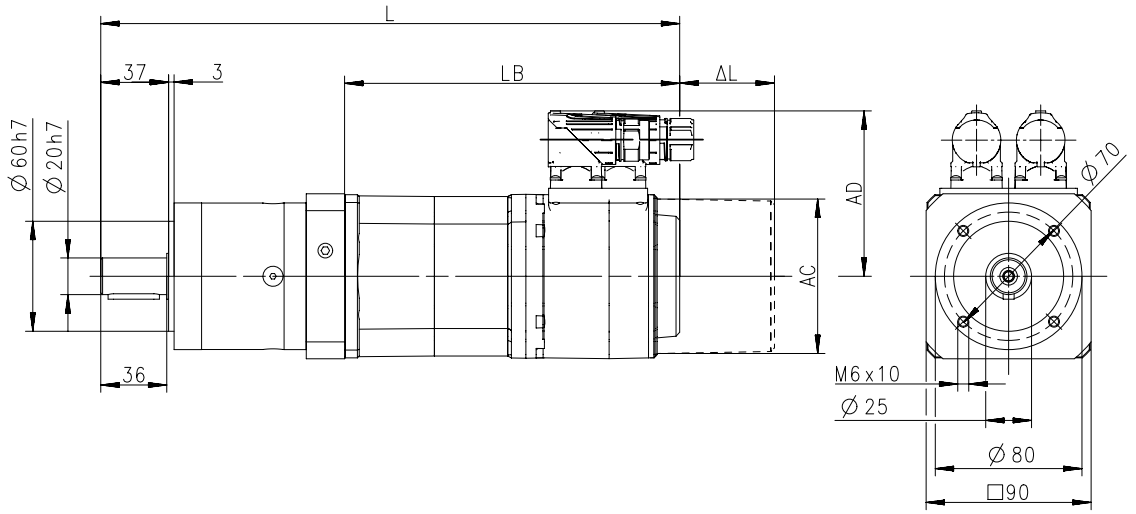

Product			MCS						
			06C41	06C60	06F41	06F60	06I41	06I60	09D60
Length									
Total length	**L**	**[mm]**	300		330		360		351
Motor length	**LB**	**[mm]**	132		162		192		183
Length of motor options	**Δ L**	**[mm]**	100						71
Motor diameter	**AC**	**[mm]**	86						89
Distance motor/connection	**AD**	**[mm]**	77						89.7



Dimensions, self-ventilated motors

g700-P260, 1-stage gearboxes

Dimensions with solid shaft and Flange

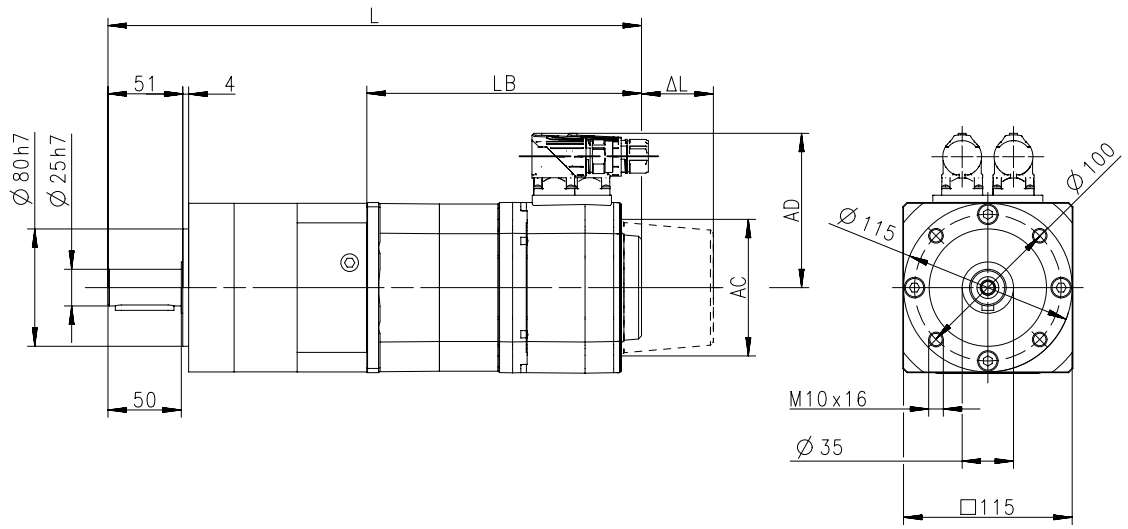

Product			MCS										
			09D41	09D60	09F38	09F60	09H41	09H60	09L41	09L51	12D20	12D41	12H15
Length													
Total length	**L**	**[mm]**	359		379		399		439		364		404
Motor length	**LB**	**[mm]**	183		203		223		263		188		228
Length of motor options	**Δ L**	**[mm]**	71								69		
Motor diameter	**AC**	**[mm]**	89								116		
Distance motor/connection	**AD**	**[mm]**	89.7								105		



Dimensions, self-ventilated motors

g700-P260, 1-stage gearboxes

Dimensions with solid shaft and Flange

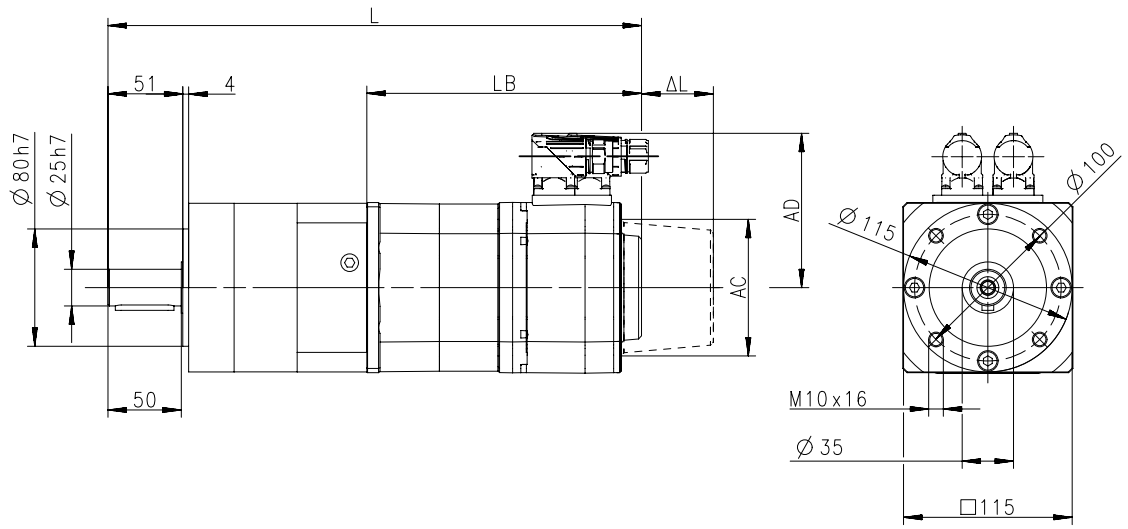

Product			MCS											
			12H30	12H35	12L20	12L41	14D15	14D36	14H15	14H32	14L15	14L32	19F14	19F30
Length														
Total length	**L**	**[mm]**	404		444		387		427		467		424	
Motor length	**LB**	**[mm]**	228		268		201		241		281		220	
Length of motor options	**Δ L**	**[mm]**	69				78						83	
Motor diameter	**AC**	**[mm]**	116				143						192	
Distance motor/connection	**AD**	**[mm]**	105				116.5					146	141.5	171



Dimensions, self-ventilated motors

g700-P260, 2-stage gearboxes

Dimensions with solid shaft and Flange

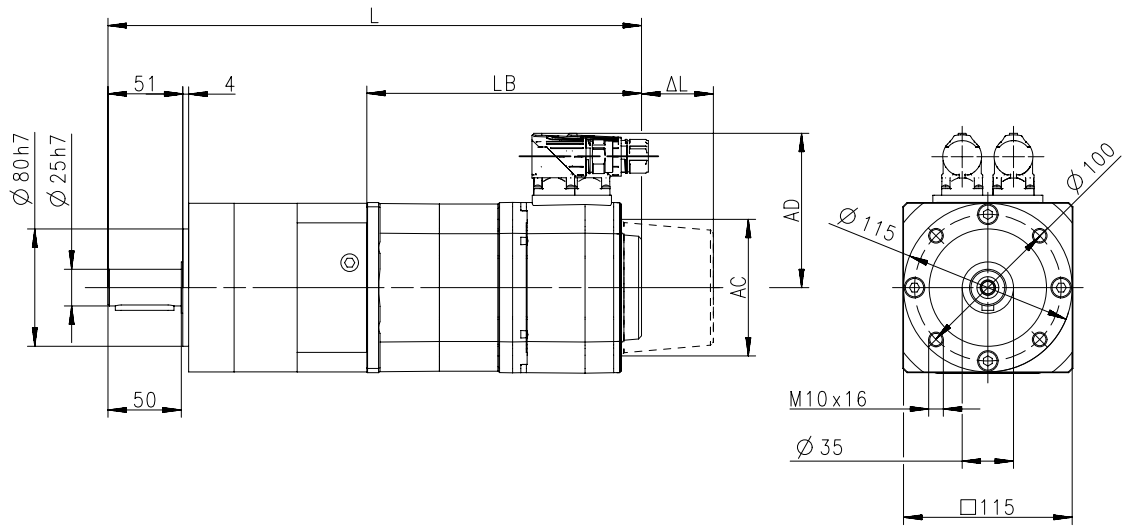

Product			MCS													
			06C41	06C60	06F41	06F60	06I41	06I60	09D41	09D60	09F38	09F60	09H41	09H60	09L41	09L51
Length																
Total length	**L**	**[mm]**	336		366		396		387		407		427		467	
Motor length	**LB**	**[mm]**	132		162		192		183		203		223		263	
Length of motor options	**Δ L**	**[mm]**	100						71							
Motor diameter	**AC**	**[mm]**	86						89							
Distance motor/connection	**AD**	**[mm]**	77						89.7							



Dimensions, self-ventilated motors

g700-P260, 2-stage gearboxes

Dimensions with solid shaft and Flange

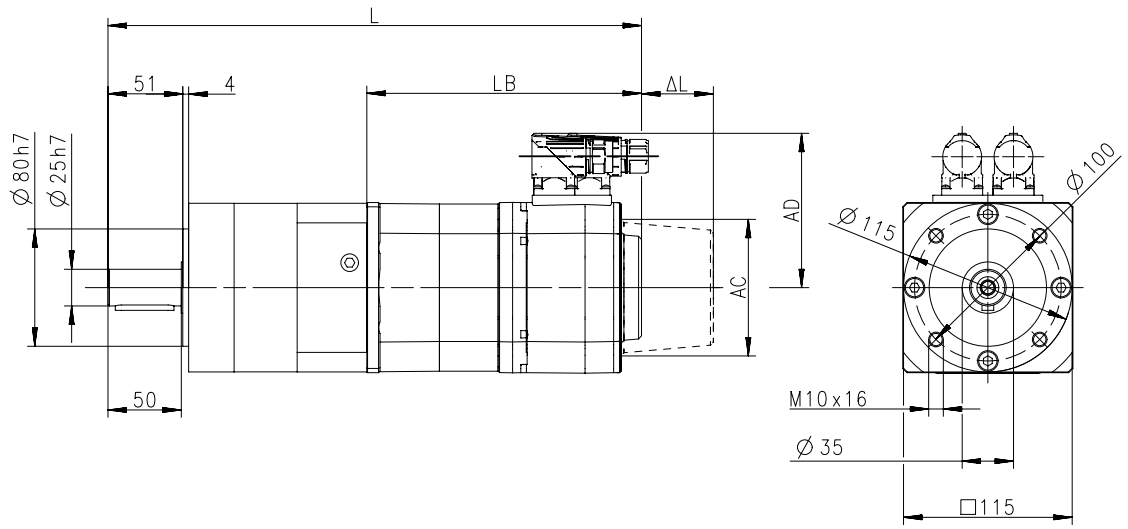

Product			MCS												
			12D20	12D41	12H15	12H30	12H35	12L20	12L41	14D15	14D36	14H15	14H32	14L15	14L32	19F30
Length																
Total length	**L**	**[mm]**	392		432			472		415		455		495		452
Motor length	**LB**	**[mm]**	188		228			268		201		241		281		220
Length of motor options	**Δ L**	**[mm]**	69							78						83
Motor diameter	**AC**	**[mm]**	116							143						192
Distance motor/connection	**AD**	**[mm]**	105							116.5					146	171



Dimensions, self-ventilated motors

g700-P260, 3-stage gearboxes

Dimensions with solid shaft and Flange

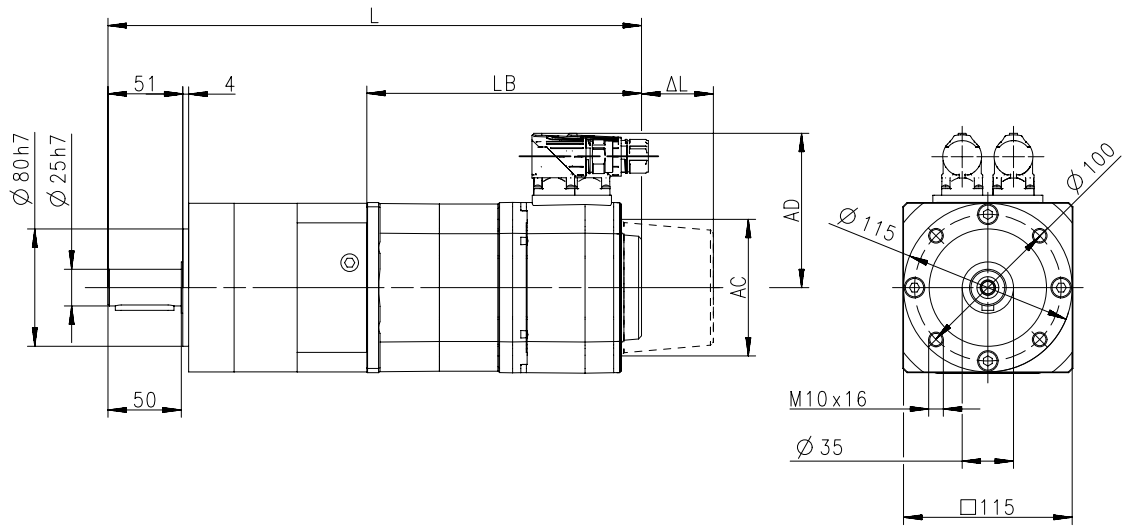

Product			MCS						
			06C41	06C60	06F41	06F60	06I41	06I60	09D41
Length									
Total length	**L**	**[mm]**	363		393		423		414
Motor length	**LB**	**[mm]**	132		162		192		183
Length of motor options	**Δ L**	**[mm]**	100						71
Motor diameter	**AC**	**[mm]**	86						89
Distance motor/connection	**AD**	**[mm]**	77						89.7



Dimensions, self-ventilated motors

g700-P260, 3-stage gearboxes

Dimensions with solid shaft and Flange

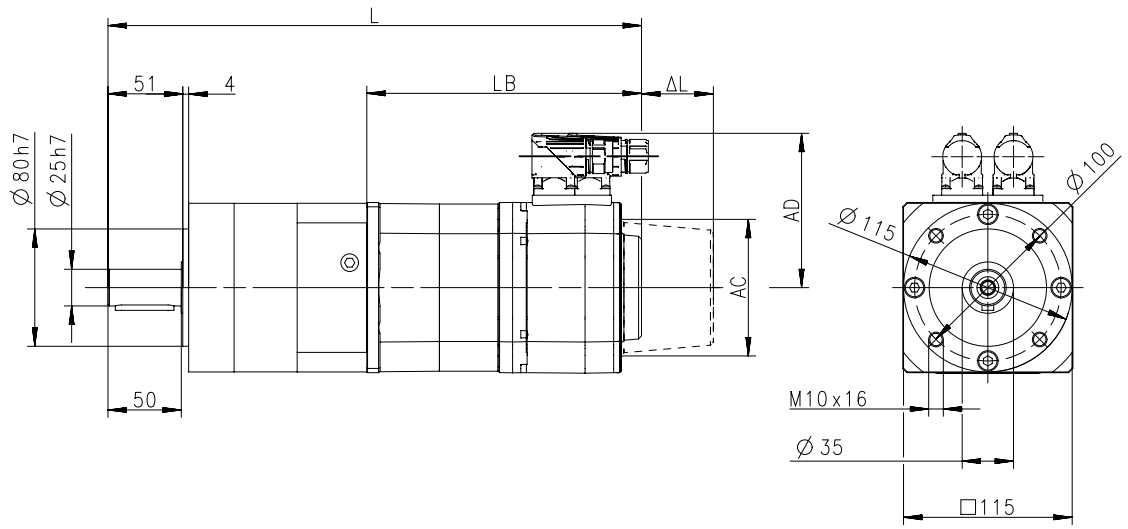

Product			MCS							
			09D60	09F38	09F60	09H41	09H60	09L41	09L51	12D41
Length										
Total length	**L**	**[mm]**	414	434		454		494		419
Motor length	**LB**	**[mm]**	183	203		223		263		188
Length of motor options	**Δ L**	**[mm]**	71							69
Motor diameter	**AC**	**[mm]**	89							116
Distance motor/connection	**AD**	**[mm]**	89.7							105



Dimensions, self-ventilated motors

g700-P800, 1-stage gearboxes

Dimensions with solid shaft and Flange

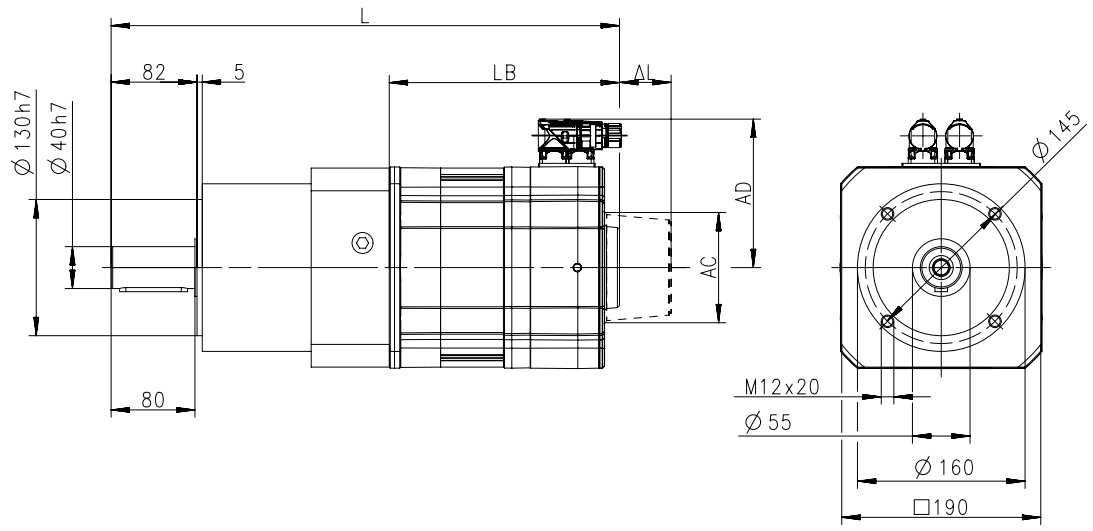

8800245-01

Product			MCS						
			12H15	12L20	12L41	14H15	14H32	14L15	14L32
Length									
Total length	**L**	**[mm]**	484	524		497		537	
Motor length	**LB**	**[mm]**	228	268		241		281	
Length of motor options	**Δ L**	**[mm]**	69			78			
Motor diameter	**AC**	**[mm]**	116			143			
Distance motor/connection	**AD**	**[mm]**	105			116.5			146

6.1.1



Dimensions, self-ventilated motors

g700-P800, 1-stage gearboxes

Dimensions with solid shaft and Flange

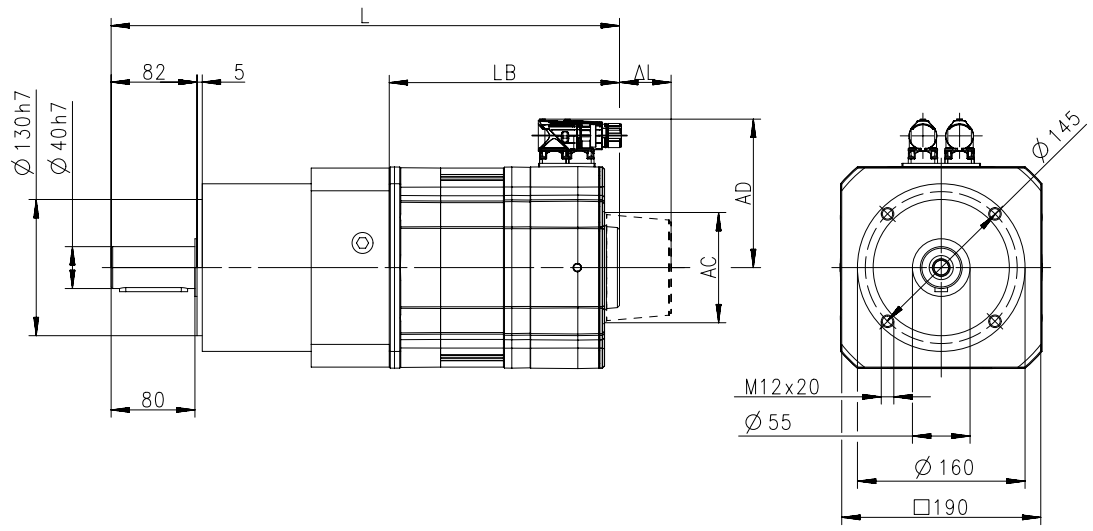

Product			MCS							
			14P14	14P32	19F14	19F30	19J14	19J30	19P14	19P30
Length										
Total length	**L**	**[mm]**	577		486		526		586	
Motor length	**LB**	**[mm]**	321		220		260		320	
Length of motor options	**Δ L**	**[mm]**	78		83		93			
Motor diameter	**AC**	**[mm]**	143		192					
Distance motor/connection	**AD**	**[mm]**	116.5	146	141.5	171	141.5	171	141.5	171



Dimensions, self-ventilated motors

g700-P800, 2-stage gearboxes

Dimensions with solid shaft and Flange

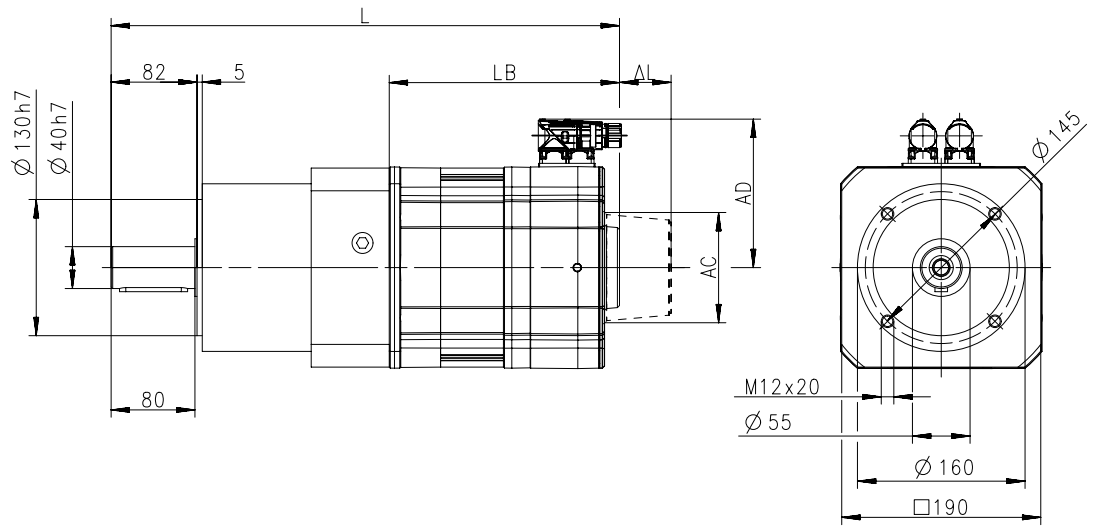

Product			MCS									
			12D20	12D41	12H15	12H30	12H35	12L20	12L41	14D15	14D36	14H15
Length												
Total length	**L**	**[mm]**	493		533			573		506		546
Motor length	**LB**	**[mm]**	188		228			268		201		241
Length of motor options	**Δ L**	**[mm]**	69							78		
Motor diameter	**AC**	**[mm]**	116							143		
Distance motor/connection	**AD**	**[mm]**	105							116.5		



Dimensions, self-ventilated motors

g700-P800, 2-stage gearboxes

Dimensions with solid shaft and Flange

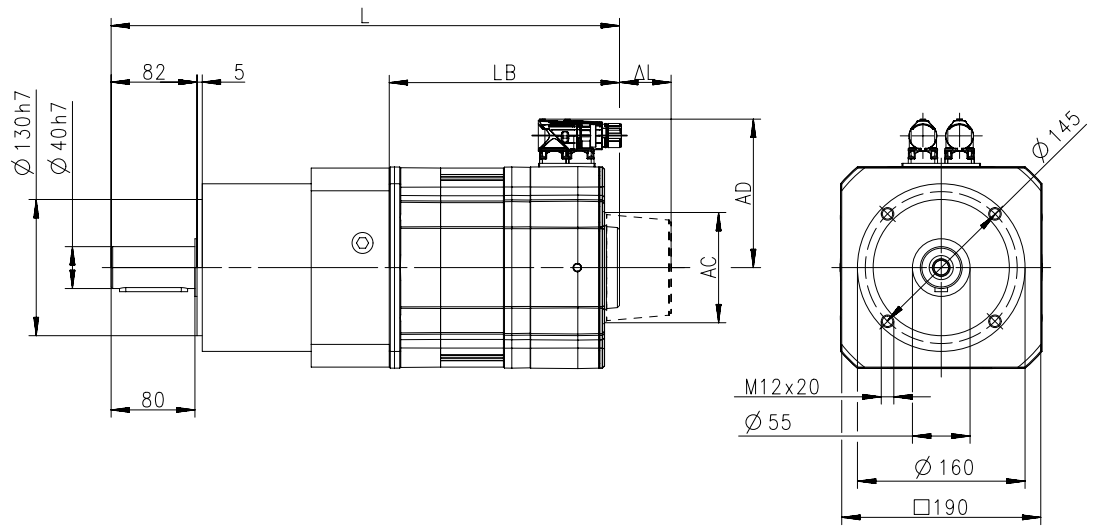

Product			MCS										
			14H32	14L15	14L32	14P14	14P32	19F14	19F30	19J14	19J30	19P14	19P30
Length													
Total length	**L**	**[mm]**	546	586		626		535		575		635	
Motor length	**LB**	**[mm]**	241	281		321		220		260		320	
Length of motor options	**Δ L**	**[mm]**	78					83		93			
Motor diameter	**AC**	**[mm]**	143					192					
Distance motor/connection	**AD**	**[mm]**	116.5		146	116.5	146	141.5	171	141.5	171	141.5	171



Dimensions, forced ventilated motors

g700-P130, 1-stage gearboxes

Dimensions with solid shaft and Flange

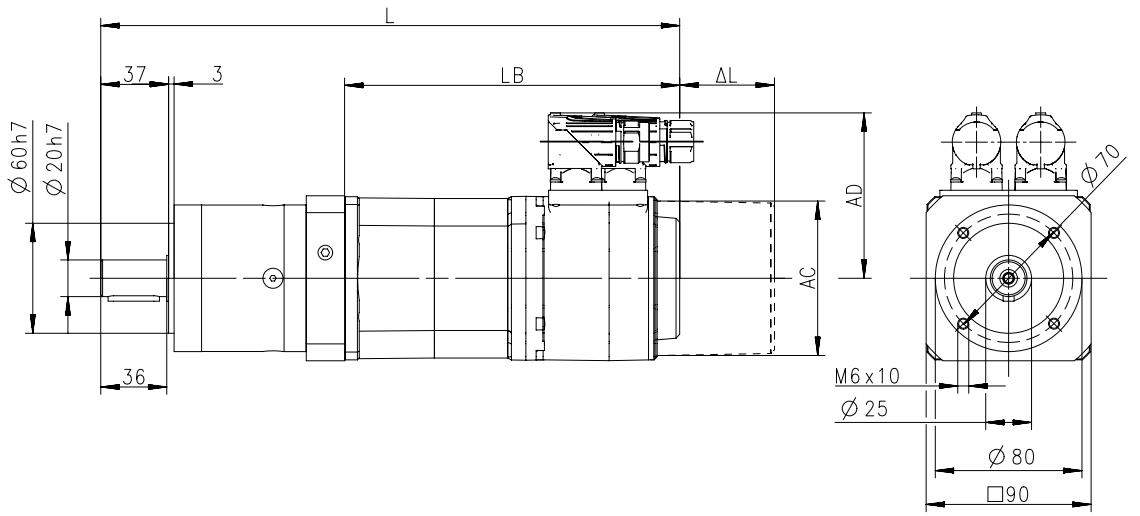

Product			MCS	
			12D17	12D35
Length				
Total length	**L**	**[mm]**	404	
Motor length	**LB**	**[mm]**	261	
Length of motor options	**Δ L**	**[mm]**	63	
Motor diameter	**AC**	**[mm]**	140	
Distance motor/connection	**AD**	**[mm]**	105	



Dimensions, forced ventilated motors

g700-P130, 2-stage gearboxes

Dimensions with solid shaft and Flange

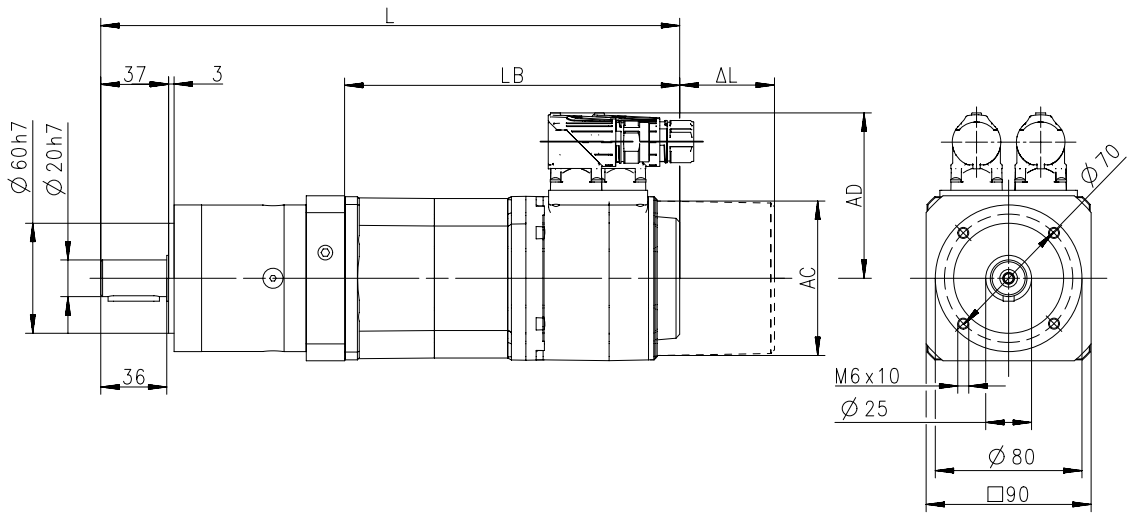

Product			MCS	
			12D17	12D35
Length				
Total length	**L**	**[mm]**	422	
Motor length	**LB**	**[mm]**	261	
Length of motor options	**Δ L**	**[mm]**	63	
Motor diameter	**AC**	**[mm]**	140	
Distance motor/connection	**AD**	**[mm]**	105	



Dimensions, forced ventilated motors

g700-P260, 1-stage gearboxes

Dimensions with solid shaft and Flange

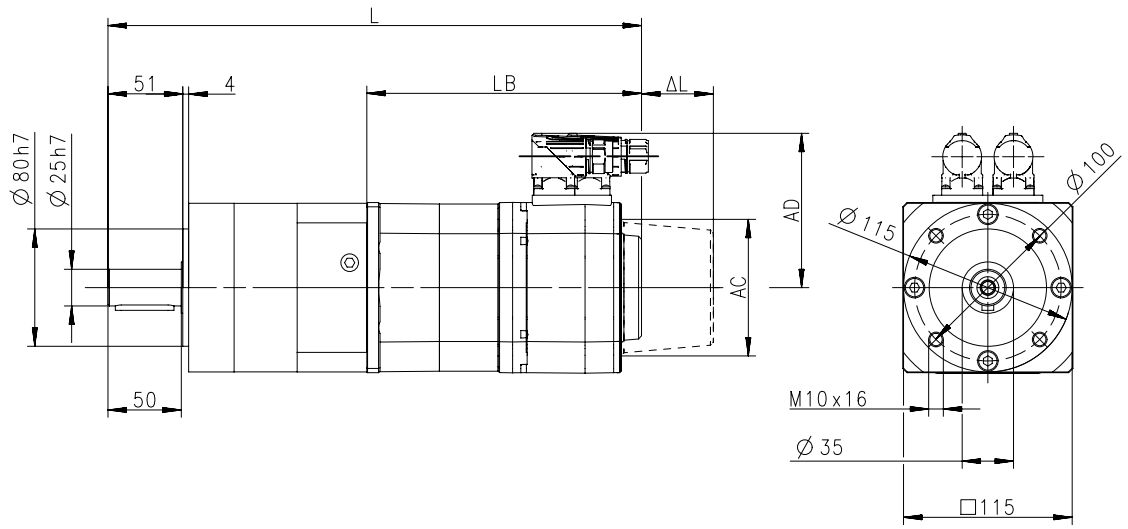

Product			MCS							
			12D17	12D35	12H14	12H34	12L17	12L39	14D14	14D30
Length										
Total length	**L**	**[mm]**	437		477		517		475	
Motor length	**LB**	**[mm]**	261		301		341		289	
Length of motor options	**Δ L**	**[mm]**	63						81.5	
Motor diameter	**AC**	**[mm]**	140						167	
Distance motor/connection	**AD**	**[mm]**	105						116.5	



Dimensions, forced ventilated motors

g700-P260, 2-stage gearboxes

Dimensions with solid shaft and Flange

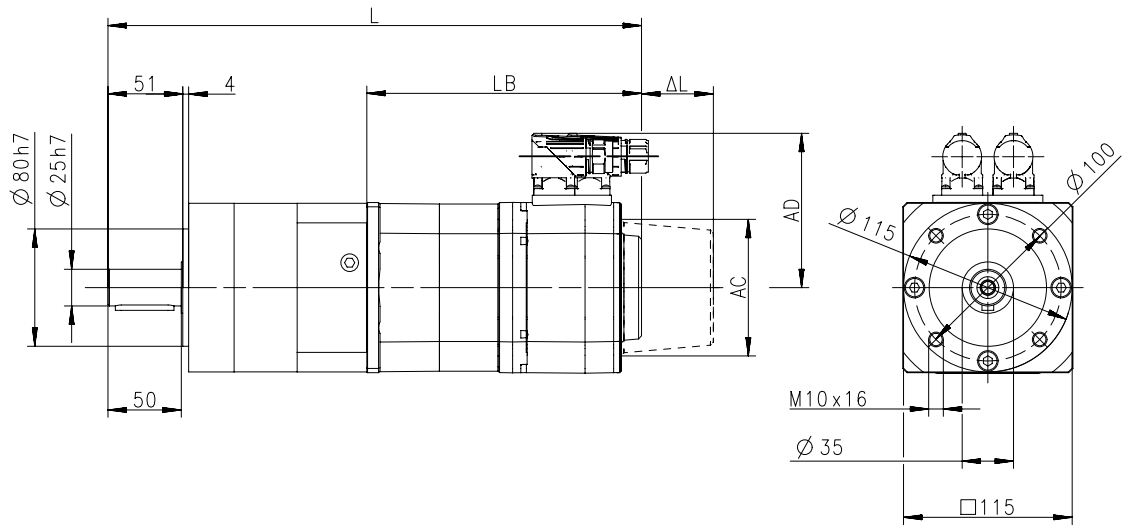

Product			MCS							
			12D17	12D35	12H14	12H34	12L17	12L39	14D14	14D30
Length										
Total length	**L**	**[mm]**	465		505		545		503	
Motor length	**LB**	**[mm]**	261		301		341		289	
Length of motor options	**Δ L**	**[mm]**	63						81.5	
Motor diameter	**AC**	**[mm]**	140						167	
Distance motor/connection	**AD**	**[mm]**	105						116.5	



Dimensions, forced ventilated motors

g700-P800, 1-stage gearboxes

Dimensions with solid shaft and Flange

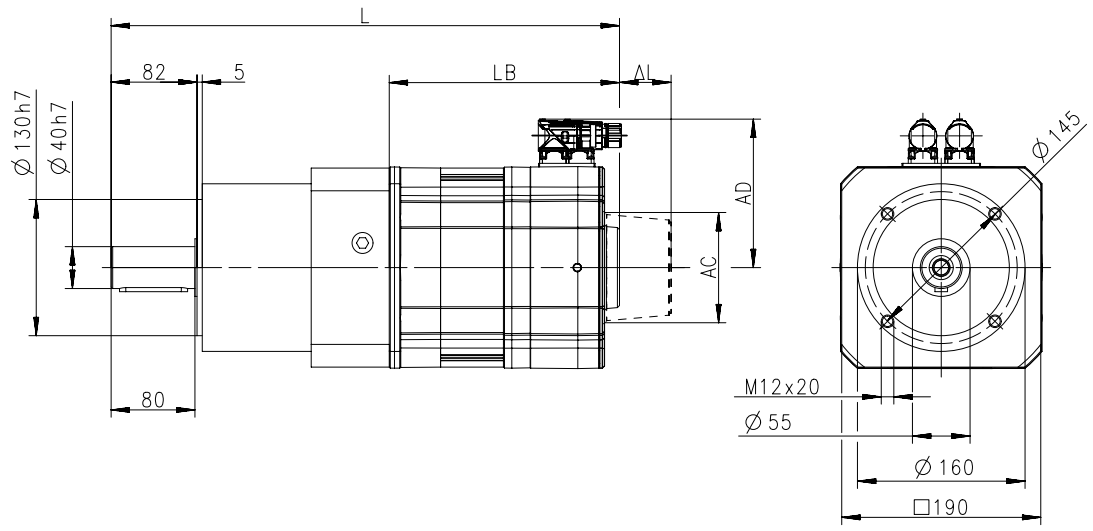

Product			MCS								
			12H14	12H34	12L17	12L39	14D14	14D30	14H12	14H28	14L14
Length											
Total length	**L**	**[mm]**	557		597		545		585		625
Motor length	**LB**	**[mm]**	301		341		289		329		369
Length of motor options	**Δ L**	**[mm]**	63				81.5				
Motor diameter	**AC**	**[mm]**	140				167				
Distance motor/connection	**AD**	**[mm]**	105				116.5			146	116.5

6.1.1



Dimensions, forced ventilated motors

g700-P800, 1-stage gearboxes

Dimensions with solid shaft and Flange

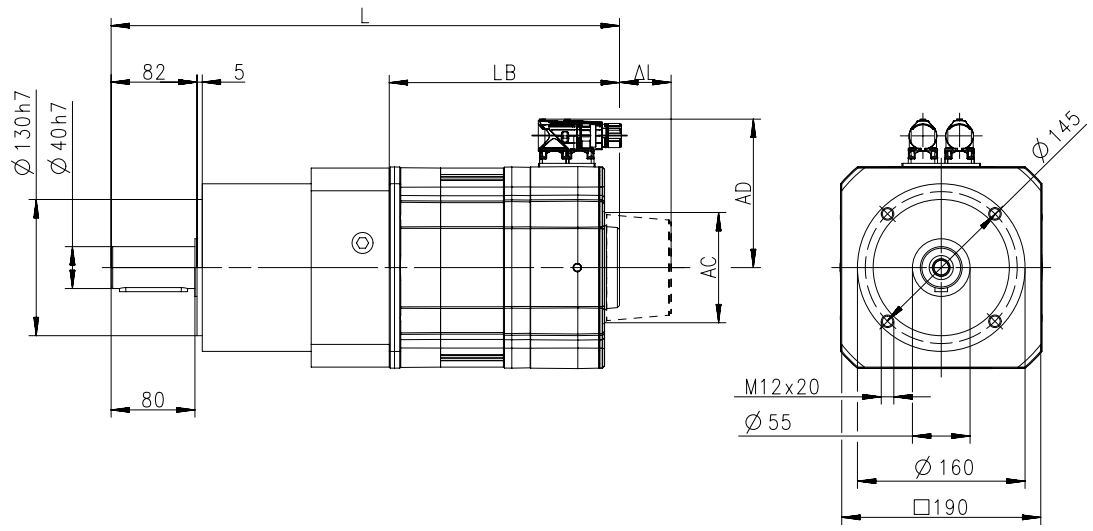

Product			MCS								
			14L30	14P11	14P26	19F12	19F29	19J12	19J29	19P12	19P29
Length											
Total length	**L**	**[mm]**	625	665		593		633		693	
Motor length	**LB**	**[mm]**	369	409		327		367		427	
Length of motor options	**Δ L**	**[mm]**	81.5			72		82			
Motor diameter	**AC**	**[mm]**	167			212					
Distance motor/connection	**AD**	**[mm]**	146	116.5	146	141.5	171				



Dimensions, forced ventilated motors

g700-P800, 2-stage gearboxes

Dimensions with solid shaft and Flange

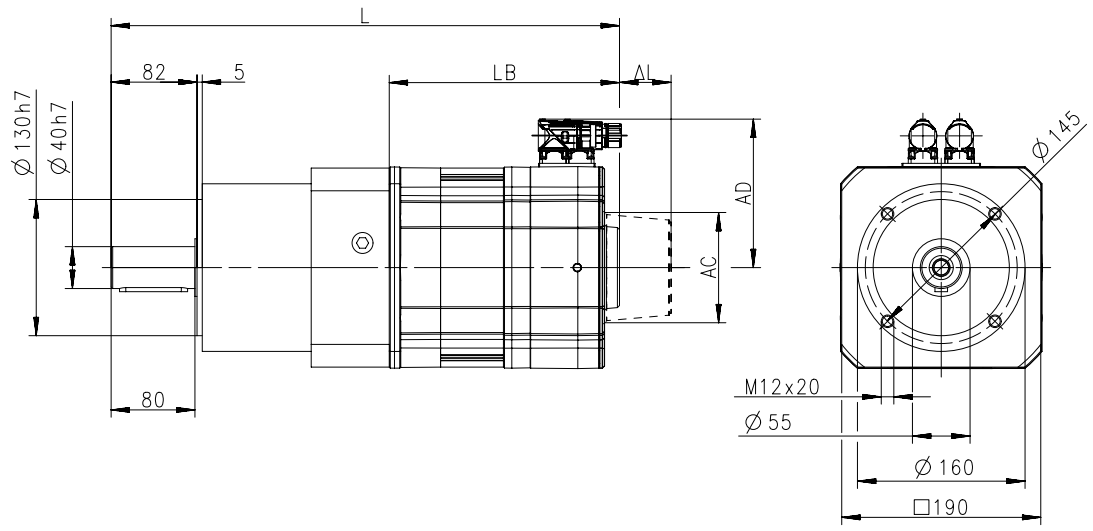

Product			MCS								
			12D17	12D35	12H14	12H34	12L17	12L39	14D14	14D30	14H12
Length											
Total length	**L**	**[mm]**	566		606		646		594		634
Motor length	**LB**	**[mm]**	261		301		341		289		329
Length of motor options	**Δ L**	**[mm]**	63						81.5		
Motor diameter	**AC**	**[mm]**	140						167		
Distance motor/connection	**AD**	**[mm]**	105						116.5		



Dimensions, forced ventilated motors

g700-P800, 2-stage gearboxes

Dimensions with solid shaft and Flange

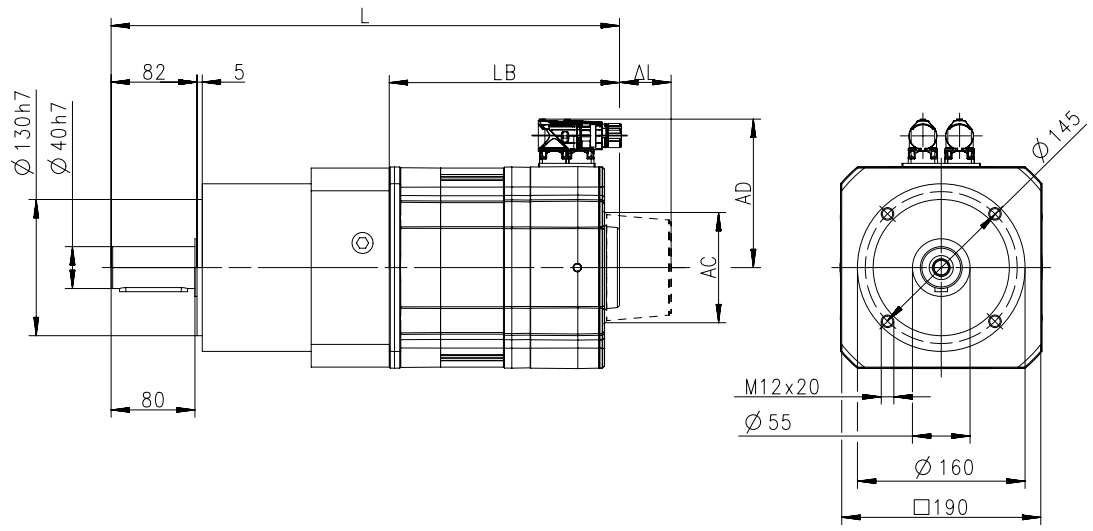

Product			MCS									
			14H28	14L14	14L30	14P11	14P26	19F12	19F29	19J12	19J29	19P29
Length												
Total length	**L**	**[mm]**	634	674		714		642		682		742
Motor length	**LB**	**[mm]**	329	369		409		327		367		427
Length of motor options	**Δ L**	**[mm]**	81.5					72		82		
Motor diameter	**AC**	**[mm]**	167					212				
Distance motor/connection	**AD**	**[mm]**	146	116.5	146	116.5	146	141.5	171			



Weights, self-ventilated motors

1-stage gearboxes

				MCS								
				06C41 06C60	06F41 06F60	06I41 06I60	09D41 09D60	09F38 09F60	09H41 09H60	09L41 09L51	12D20 12D41	12H15
g700	-P20	m	[kg]	2.2								
	-P44	m	[kg]	2.7	3.1	3.8	5.2	6.1				
	-P130	m	[kg]		4.3	5.0	6.4	7.3	8.2	10	8.5	12
	-P260	m	[kg]				10	11	12	14	12	16
	-P800	m	[kg]									28

				MCS								
				12H30 12H35	12L20 12L41	14D15 14D36	14H15 14H32	14L15 14L32	14P14 14P32	19F14 19F30	19J14 19J30	19P14 19P30
g700	-P130	m	[kg]	12								
	-P260	m	[kg]	16	19	17	22	26		29		
	-P800	m	[kg]		31		34	38	43	41	48	58

2-stage gearboxes

				MCS								
				06C41 06C60	06F41 06F60	06I41 06I60	09D41 09D60	09F38 09F60	09H41 09H60	09L41 09L51	12D20 12D41	12H15 12H30 12H35
g700	-P20	m	[kg]	2.3								
	-P44	m	[kg]	2.9	3.3	4.0	5.4	6.3				
	-P130	m	[kg]	4.4	4.8	5.5	6.9	7.8	8.7	10	9.0	12
	-P260	m	[kg]	9.8	10	11	12	13	14	16	14	18
	-P800	m	[kg]								28	32

				MCS								
				12L20 12L41	14D15 14D36	14H15 14H32	14L15 14L32	14P14 14P32	19F14	19F30	19J14 19J30	19P14 19P30
g700	-P260	m	[kg]	21	19	24	28			31		
	-P800	m	[kg]	35	33	38	42	47	45		52	62

3-stage gearboxes

				MCS									
				06C41	06C60	06F41 06F60	06I41 06I60	09D41	09D60	09F38 09F60	09H41 09H60	09L41 09L51	12D41
g700	-P44	m	[kg]	3.1									
	-P130	m	[kg]	4.9		5.3	6.0		7.4				
	-P260	m	[kg]	12			13	14		15	16	18	16



Weights, forced ventilated motors

1-stage gearboxes

				MCS								
				12D17 12D35	12H14 12H34	12L17 12L39	14D14 14D30	14H12 14H28	14L14 14L30	14P11 14P26 19F12 19F29	19J12 19J29	19P12 19P29
g700	-P130	m	[kg]	11								
	-P260	m	[kg]	14	18	21	20					
	-P800	m	[kg]		30	33	32	38	42	47	54	64

2-stage gearboxes

				MCS								
				12D17 12D35	12H14 12H34	12L17 12L39	14D14 14D30	14H12 14H28	14L14 14L30	14P11 14P26 19F12 19F29	19J12 19J29	19P29
g700	-P130	m	[kg]	11								
	-P260	m	[kg]	16	20	23	22					
	-P800	m	[kg]	30	34	37	36	42	46	51	58	68



Surface and corrosion protection

For optimum protection of geared motors against ambient conditions, the surface and corrosion protection system (OKS) offers tailor-made solutions.

Various surface coatings combined with other protective measures ensure that the geared motors operate reliably even at high air humidity, in outdoor installations or in the presence of atmospheric impurities. Any colour from the RAL Classic collection can be chosen for the top coat. The geared motors are also available unpainted (no surface and corrosion protection).

Surface and corrosion protection	Applications	Measures
OKS-G (primed)	• Dependent on subsequent top coat applied	• 2K PUR priming coat (grey) • Zinc-coated screws • Rust-free breather elements Optional measures • Stainless steel nameplate
-	• Standard applications • Internal installation in heated buildings • Air humidity up to 90%	• Surface coating as per corrosivity category C1 (in line with EN 12944-2) • Zinc-coated screws • Rust-free breather elements Optional measures • Stainless steel nameplate
OKS-M (medium)	• Internal installation in non-heated buildings • Covered, protected external installation • Air humidity up to 95%	• Surface coating as per corrosivity category C2 (in line with EN 12944-2) • Zinc-coated screws • Rust-free breather elements Optional measures • Stainless steel shaft • Stainless steel nameplate • Rust-free shrink disc (on request)
OKS-L (large)	• External installation • Air humidity above 95% • Chemical industry plants • Food industry	• Surface coating as per corrosivity category C3 (in line with EN 12944-2) - -



Surface and corrosion protection

Structure of surface coating

Surface and corrosion protection	Corrosivity category	Surface coating	Colour
	DIN EN ISO 12944-2	Structure	
Without OKS(uncoated)		Dipping primed gearbox	
OKS-G (primed)		Dipping primed gearbox 2K PUR priming coat	
-	C1	Dipping primed gearbox 2K-PUR top coat	Standard: RAL 7012 Optional: RAL Classic
OKS-M (medium)	C2	Dipping primed gearbox 2K PUR priming coat 2K-PUR top coat	
OKS-L (large)	C3		



g700-P planetary geared motors

12 ... 647 Nm (asynchronous servo motors)

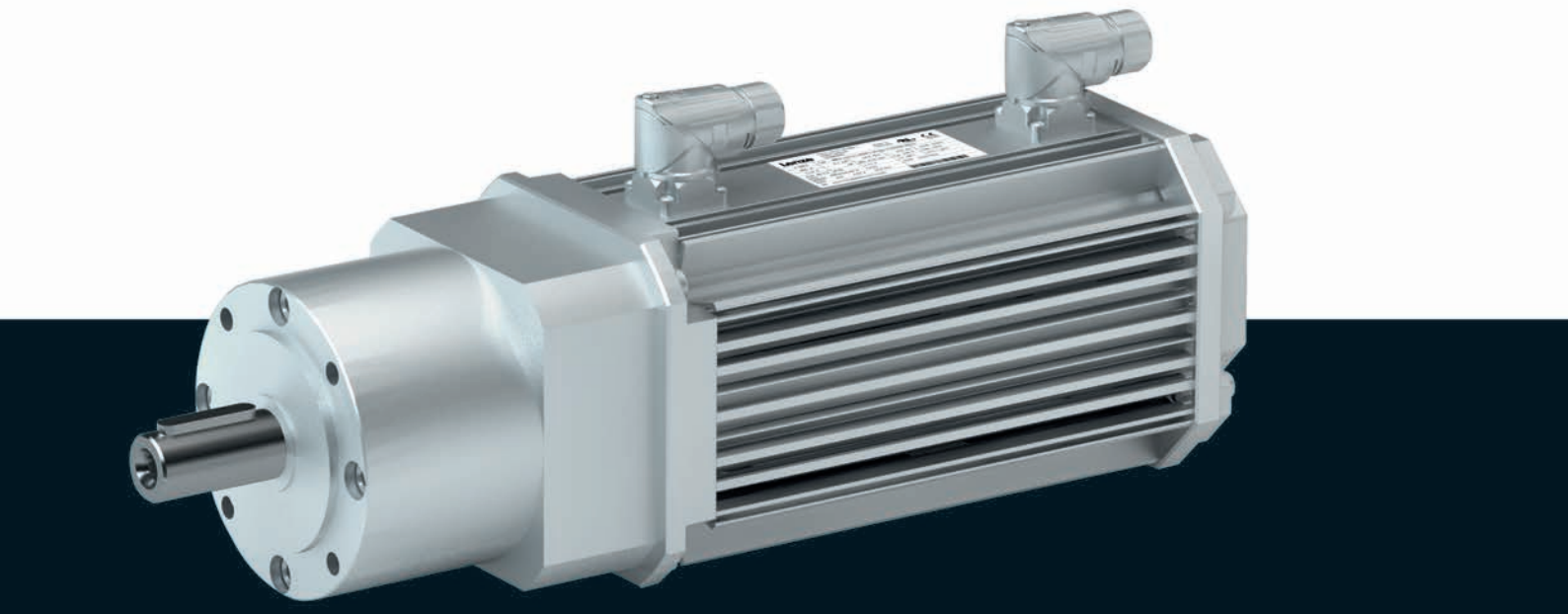

g700-P planetary geared motors

Contents



General information	List of abbreviations	6.1.2 - 5
	Product information	6.1.2 - 6
	Equipment	6.1.2 - 7
	The gearbox kit	6.1.2 - 9
	Dimensioning	6.1.2 - 14
Technical data	Selection tables, notes	6.1.2 - 17
	Selection tables	6.1.2 - 18
	Dimensions, notes	6.1.2 - 23
	Dimensions, self-ventilated motors	6.1.2 - 24
	Dimensions, forced ventilated motors	6.1.2 - 31
	Weights, self-ventilated motors	6.1.2 - 35
	Weights, forced ventilated motors	6.1.2 - 36
	Surface and corrosion protection	6.1.2 - 37

g700-P planetary geared motors

Contents





List of abbreviations

c		Load capacity
i		Ratio
J	[kgcm²]	Moment of inertia
m	[kg]	Mass
M_2	[Nm]	Output torque
$M_{2, max}$	[Nm]	Max. output torque
$n_{2, eto}$	[r/min]	Transition speed
$n_{2, th}$	[r/min]	Thermal limit speed

CCC	China Compulsory Certificate
CE	Communauté Européenne
CSA	Canadian Standards Association
cURus	Combined certification marks of UL for the USA and Canada
DIN	Deutsches Institut für Normung e.V.
EMC	Electromagnetic compatibility
EN	European standard
GOST	Certificate for Russian Federation
IEC	International Electrotechnical Commission
IM	International Mounting Code
IP	International Protection Code
NEMA	National Electrical Manufacturers Association
UL	Underwriters Laboratory Listed Product
UR	Underwriters Laboratory Recognized Product
VDE	Verband deutscher Elektrotechniker (Association of German Electrical Engineers)

g700-P planetary geared motors

General information



Product information

In combination with asynchronous servo motors, our planetary gearbox form a compact and powerful drive unit. Numerous options at the input end provide for the drive to be easily and precisely adapted to your application.

The planetary gearbox g700 is the ideal solution for demanding and dynamic tasks. With its high reliability, long service life and outstanding scalability, it provides everything you need to manage demanding machine tasks.

Versions

- High input speed possible Max. input speed 18000 rpm
- Wide variety of ratios i= 3...512 in 24 ratios
- High rated torque bandwidth 20 ... 800 Nm in five sizes
- Lifetime lubrication
- Suitable for any mounting position, hence only one variant
- With MCA asynchronous servo motors, rated torque: 2 Nm ... 61.4 Nm

The product name

Gearbox type	Product range		Design	Rated torque [Nm]	Product
Planetary gearbox	g700	-	P	20	g700-P20
				44	g700-P44
				130	g700-P130
				260	g700-P260
				800	g700-P800



Equipment

Overview

The equipment includes all the options available as standard and all the built-on accessories of the product.

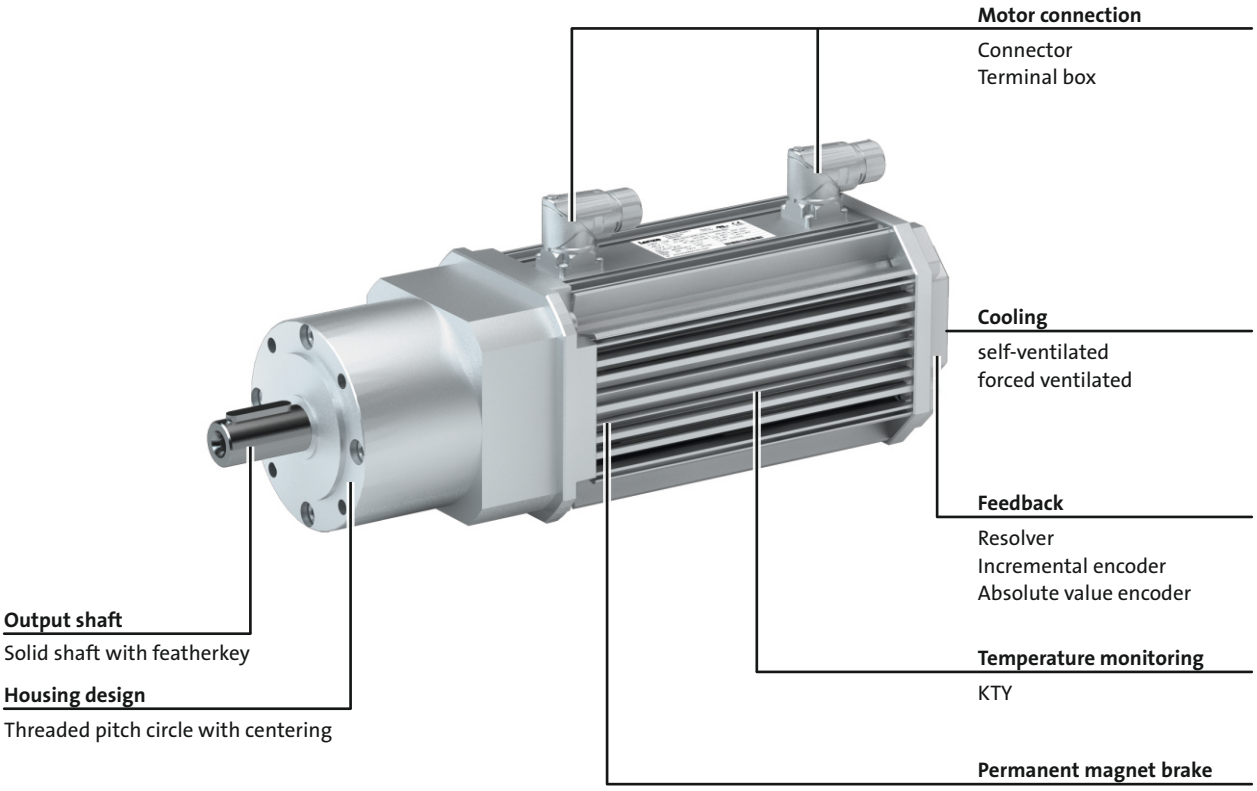





The gearbox kit

Geared motor

Product	g700-P130	g700-P260	g700-P800
Motor type	Asynchronous servo motor		
Servo motor			
2.0 Nm	MCA10		
4.0 - 6.3 Nm		MCA13	
5.4 - 12 Nm		MCA14	
9.5 - 21 Nm			MCA17
12 - 36 Nm			MCA19
17 - 61 Nm			
Technical data			
Output torque	See selection table		
Output speed	See selection table		
Ratio	See selection table		
Load capacity	See selection table		
Moment of inertia	See selection table		
Mounting position			
Standard	Any		
Colour	Primed Paint in various corrosion-protection designs in accordance with RAL colours		
Surface and corrosion protection	Without OKS(uncoated) OKS-G (primed) - OKS-M (medium) OKS-L (large)		



The gearbox kit

Motor details

Product	MCA					
	10I40	13I34 13I41	14L16 14L20 14L35 14L41	17N17 17N23 17N35 17N41	19S17 19S23 19S35 19S42	21X17 21X25 21X35 21X42
Connection type	Plug connectors Terminal box					
Permanent magnet holding brake						
Rated torque [Nm]	3.3	12	15	24	46	88
Brake voltage [V]	DC 24 AC 230					
Feedback	With absolute value encoder With incremental encoder With resolver					
Cooling	Self-ventilated	Self-ventilated Forced-ventilated				
Temperature monitoring	KTY83-110 thermal detector					
Approval	cURus GOST_R UkrSepro					
Enclosure	IP54 IP65					

► Further information and installation feasibilities can be found in the Motors chapter.



The gearbox kit

Motor details

Connection type
 Plug connectors  Terminal box

Cooling: self-ventilated
 With resolver  With permanent magnet brake  With feedback With feedback and permanent magnet brake

Cooling: forced ventilated
 With resolver  With permanent magnet brake 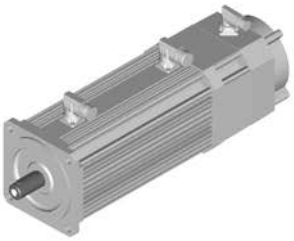 With feedback With feedback and permanent magnet brake



The gearbox kit

Gearbox details

Product					
	g700-P20	g700-P44	g700-P130	g700-P260	g700-P800
Driven shaft					
Solid shaft with featherkey [mm]	10x23	14x30	20x36	25x50	40x80
Design	Standard				
Gasket	NBR				
Bearing	Standard				
Housing					
Housing version	Without foot with centering				
Output flange					
flange diameter [mm]	40	60	80	115	160
Lubricant					
Type	Klüberplex BEM34-132				
Breather element	Without				
Backlash					
Backlash	Standard				

► Further information and installation feasibilities can be found in the Gearboxes chapter.



The gearbox kit

Gearbox details

Solid shaft
 With centering



Dimensioning

General information about the data provided in this catalogue

The powers, torques and speeds specified in this catalogue are rounded values and are valid under the following conditions:

- Operating time/day = 8 h (100% OT)
- Duty class I for up to 10 switching operations/h
- Mounting positions and designs in this catalogue
- Standard lubricant
- T_{amb} = 30 °C for gearboxes,
  T_{amb} = 40 °C for motors (in accordance with EN 60034)
- Site altitude < = 1000 m amsl
- The selection tables provide the permissible mechanical powers and torques. For notes on the thermal power limit, see chapter drive dimensioning.
- The rated power specified for motors and geared motors applies to operating mode S1 (in accordance with EN 60034).

Under different operating conditions, the values obtained may vary from those listed here.
In the case of extreme operating conditions, please consult your Lenze sales office.



Dimensioning

Load capacity and application factor

Load capacity c of gearbox
Rated value for the load capacity of Lenze geared motors.
- c is the ratio of the permissible rated torque of the gearbox to the rated torque supplied by the drive component (e.g. the built-in Lenze motor).
- The value of c must always be greater than the value of the application factor k calculated for the application.

Application factor k (according to DIN 3990)
Takes into account the influence of temporally variable loads which are actually present during the anticipated operating time of gearboxes and geared motors.
k is determined by:
- the type of load
- the load intensity
- temporal influences

Duty class	Load type
I	Smooth operation, small or light jolts
II	Uneven operation, average jolts
III	Uneven operation, severe jolts and/or alternating load

Application factor k

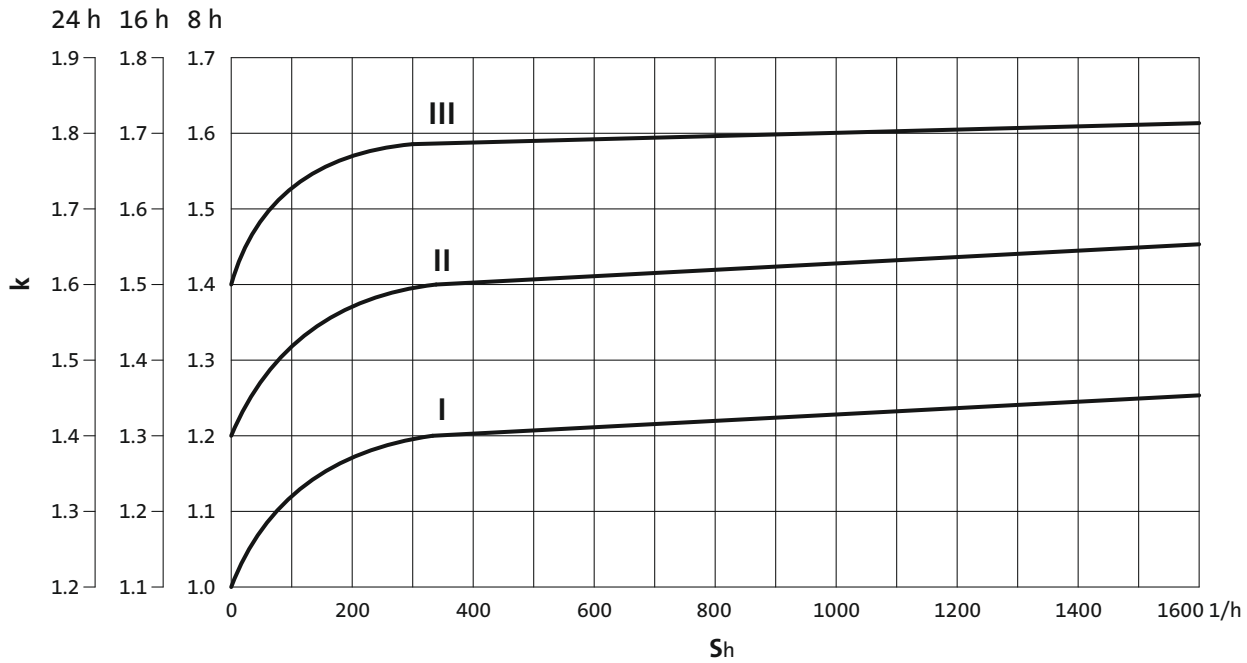

► S_h= switchings/h



Dimensioning

Weights

The values given in the tables consider the following gearbox/motor combination:
- Gearbox with solid shaft including lubricant amount
- Motor with feedback

For versions deviating from this, additional weights have to be considered.

The respective values can be found for:
- Geared motors with feedback
  > Chapter: Geared motors/Technical data
- Motor options: Brake
  > Chapter: Motors/Accessories

Moments of inertia

The given moments of inertia of the gearbox refer to the drive shaft. The influence of the ratio (i^2) has been considered in the data.

When the total moment of inertia of the geared motor is calculated, the values of the geared motors and the brake have to be added.

The respective values can be found for:
- Geared motors with feedback
  > Chapter: Geared motors/Technical data/Selection tables
- Motor options: Brake
  > Chapter: Motors/Accessories



Selection tables, notes

Notes on the selection tables

The selection tables show the available combinations of gearbox type, number of stages, ratio and motor. They are used only to provide basic orientation.
The following legend indicates the structure of the selection tables.

Number of the gear stage of the gearbox

2-stage gearboxes

Inverter operation						i	Product		Cooling	
$M_{2,max}$ [Nm]	$n_{2,th}$ [r/min]	M_2 [Nm]	$n_{2,eto}$ [r/min]	c	J [kgcm²]		g700	MCS		
6.7	506	5	506	1.3	0.200	8.000	-P20	06C41	Selbst	27
9.4	579	4	579	2.1	0.200	7.000	-P20	06C41	Selbst	27
15	810	3	810	4.8	0.200	5.000	-P20	06C41	Selbst	27
17	405	6	405	2.6	0.300	10.000	-P44	06C41	Selbst	29

For operating mode S1
Torque **M_2** and
thermal output speed **$n_{2,th}$**

Product Gearbox

Product Motor

Ratio i

Moment of inertia of geared motor

Type of motor cooling

Page number for dimensions

For operating mode S2,S3 und S6
Max. permissible acceleration torque of geared motor **$M_{2,max}$** and
output speed **$n_{2,eto}$**

Load capacity of the gearbox
c is the ratio between the permissible rated torque of the gearbox and the rated torque of the three-phase AC motor (converted to the driven shaft).
c must be always higher than the service factor **k** determined for the application **k**.

$$c = \frac{M_{2,zul}}{M_{1,N} \cdot i \cdot \eta_{Getr}} > k$$



Selection tables

1-stage gearboxes

Inverter operation						i	Product		Cooling	
$M_{2, max}$ [Nm]	$n_{2, th}$ [r/min]	M_2 [Nm]	$n_{2, eto}$ [r/min]	c	J [kgcm²]		g700	MCA		
38	305	19	305	2.0	3.100	10.000	-P130	10I40	natural	24
50	494	15	494	3.2	2.800	8.000	-P130	10I40	natural	24
60	564	12	564	4.6	2.800	7.000	-P130	10I40	natural	24
84	265	17	265	4.9	5.000	10.000	-P260	10I40	natural	26
95	265	38	265	2.5	11.000	10.000	-P260	13I41	natural	26
95	265	52	265	1.8	22.000	10.000	-P260	14L41	natural	26
95	265	60	265	1.6	11.000	10.000	-P260	13I34	forced	31
95	200	64	200	1.5	22.000	10.000	-P260	14L20	natural	26
115	667	16	667	5.8	22.000	3.000	-P260	14L20	natural	26
120	438	28	438	3.9	9.600	8.000	-P260	13I41	natural	26
120	438	40	438	2.9	20.000	8.000	-P260	14L41	natural	26
120	426	47	426	2.5	9.600	8.000	-P260	13I34	forced	31
120	250	51	250	2.3	20.000	8.000	-P260	14L20	natural	26
135	500	24	500	5.0	9.700	7.000	-P260	13I41	natural	26
135	500	34	500	3.7	21.000	7.000	-P260	14L41	natural	26
135	487	40	487	3.2	9.700	7.000	-P260	13I34	forced	31
135	286	43	286	3.0	21.000	7.000	-P260	14L20	natural	26
155	500	22	500	5.9	21.000	4.000	-P260	14L20	natural	26
195	400	27	400	5.9	21.000	5.000	-P260	14L20	natural	26
331	250	71	250	5.3	44.000	4.000	-P800	17N17	forced	33
396	194	71	194	5.4	24.000	8.000	-P800	14L35	forced	33
406	194	81	194	4.8	24.000	8.000	-P800	14L16	forced	33
423	230	80	230	4.8	42.000	5.000	-P800	17N35	forced	33
435	230	93	230	4.3	42.000	5.000	-P800	17N17	forced	33
450	230	66	230	5.6	78.000	5.000	-P800	19S23	natural	29
450	194	71	194	5.4	41.000	8.000	-P800	17N23	natural	29
450	194	81	194	4.8	77.000	8.000	-P800	19S42	natural	29
450	194	117	194	3.6	77.000	8.000	-P800	19S23	natural	29
450	194	140	194	3.0	41.000	8.000	-P800	17N35	forced	33
450	194	160	194	2.7	41.000	8.000	-P800	17N17	forced	33



Selection tables

2-stage gearboxes

Inverter operation						i	Product		Cooling	
$M_{2, max}$ [Nm]	$n_{2, th}$ [r/min]	M_2 [Nm]	$n_{2, eto}$ [r/min]	c	J [kgcm²]		g700	MCA		
86	313	17	313	5.2	3.100	12.000	-P130	10I40	natural	25
110	263	24	263	3.8	3.100	15.000	-P130	10I40	natural	25
110	158	46	158	2.3	2.800	25.000	-P130	10I40	natural	25
110	99	75	99	1.5	2.800	40.000	-P130	10I40	natural	25
120	247	26	247	3.9	2.900	16.000	-P130	10I40	natural	25
120	198	34	198	3.1	2.800	20.000	-P130	10I40	natural	25
120	123	60	123	2.0	2.800	32.000	-P130	10I40	natural	25
120	55	114	55	1.1	5.000	64.000	-P260	10I40	natural	27
185	140	37	140	4.8	3.900	25.000	-P260	10I40	natural	27
210	389	37	389	4.5	20.000	9.000	-P260	14L41	natural	27
210	379	46	379	3.8	9.600	9.000	-P260	13I34	forced	32
210	222	50	222	3.6	20.000	9.000	-P260	14L20	natural	27
230	213	48	213	4.0	11.000	15.000	-P260	13I41	natural	27
230	213	71	213	3.0	22.000	15.000	-P260	14L41	natural	27
230	213	85	213	2.5	11.000	15.000	-P260	13I34	forced	32
230	140	91	140	2.4	9.800	25.000	-P260	13I41	natural	27
230	140	127	140	1.8	21.000	25.000	-P260	14L41	natural	27
230	136	148	136	1.5	9.800	25.000	-P260	13I34	forced	32
230	133	92	133	2.4	22.000	15.000	-P260	14L20	natural	27
230	88	69	88	3.1	3.700	40.000	-P260	10I40	natural	27
230	88	150	88	1.5	9.600	40.000	-P260	13I41	natural	27
230	88	203	88	1.1	20.000	40.000	-P260	14L41	natural	27
230	80	157	80	1.4	21.000	25.000	-P260	14L20	natural	27
250	109	50	109	4.3	3.700	32.000	-P260	10I40	natural	27
260	221	33	221	5.6	11.000	12.000	-P260	13I41	natural	27
260	221	51	221	4.2	22.000	12.000	-P260	14L41	natural	27
260	221	63	221	3.6	11.000	12.000	-P260	13I34	forced	32
260	194	50	194	4.2	10.000	16.000	-P260	13I41	natural	27
260	194	74	194	3.1	21.000	16.000	-P260	14L41	natural	27
260	194	90	194	2.7	10.000	16.000	-P260	13I34	forced	32
260	175	67	175	3.4	9.800	20.000	-P260	13I41	natural	27
260	175	98	175	2.5	21.000	20.000	-P260	14L41	natural	27
260	171	117	171	2.1	9.800	20.000	-P260	13I34	forced	32
260	167	68	167	3.4	22.000	12.000	-P260	14L20	natural	27
260	125	97	125	2.5	21.000	16.000	-P260	14L20	natural	27
260	109	119	109	2.1	9.600	32.000	-P260	13I41	natural	27
260	109	162	109	1.6	20.000	32.000	-P260	14L41	natural	27
260	107	190	107	1.4	9.600	32.000	-P260	13I34	forced	32
260	100	126	100	2.0	21.000	20.000	-P260	14L20	natural	27
260	63	202	63	1.3	20.000	32.000	-P260	14L20	natural	27



Selection tables

2-stage gearboxes

Inverter operation						i	Product		Cooling	
$M_{2, max}$ [Nm]	$n_{2, th}$ [r/min]	M_2 [Nm]	$n_{2, eto}$ [r/min]	c	J [kgcm²]		g700	MCA		
450	47	230	47	1.9	13.000	64.000	-P800	13I41	natural	30
450	47	311	47	1.4	24.000	64.000	-P800	14L41	natural	30
450	47	363	47	1.2	13.000	64.000	-P800	13I34	forced	34
450	31	386	31	1.2	24.000	64.000	-P800	14L20	natural	30
486	83	97	83	5.8	32.000	12.000	-P800	14L16	forced	34
602	68	119	68	4.7	14.000	25.000	-P800	13I34	forced	34
688	87	124	87	4.5	32.000	15.000	-P800	14L35	forced	34
700	87	103	87	5.1	48.000	15.000	-P800	17N41	natural	30
700	87	124	87	4.5	48.000	15.000	-P800	17N23	natural	30
700	87	143	87	4.0	32.000	15.000	-P800	14L16	forced	34
700	87	143	87	4.0	84.000	15.000	-P800	19S42	natural	30
700	87	213	87	3.0	84.000	15.000	-P800	19S23	natural	30
700	87	257	87	2.6	48.000	15.000	-P800	17N35	forced	34
700	87	297	87	2.3	48.000	15.000	-P800	17N17	forced	34
700	68	94	68	5.5	25.000	25.000	-P800	14L41	natural	30
700	68	129	68	4.4	25.000	25.000	-P800	14L20	natural	30
700	68	205	68	3.1	42.000	25.000	-P800	17N41	natural	30
700	68	240	68	2.7	25.000	25.000	-P800	14L35	forced	34
700	68	240	68	2.7	42.000	25.000	-P800	17N23	natural	30
700	68	272	68	2.5	78.000	25.000	-P800	19S42	natural	30
700	68	383	68	1.8	78.000	25.000	-P800	19S23	natural	30
700	68	447	68	1.6	42.000	25.000	-P800	17N35	forced	34
700	67	505	67	1.4	42.000	25.000	-P800	17N17	forced	34
700	65	272	65	2.5	25.000	25.000	-P800	14L16	forced	34
700	58	121	58	4.7	14.000	40.000	-P800	13I41	natural	30
700	58	181	58	3.5	24.000	40.000	-P800	14L41	natural	30
700	58	220	58	3.0	14.000	40.000	-P800	13I34	forced	34
700	58	357	58	2.0	41.000	40.000	-P800	17N41	natural	30
700	58	406	58	1.7	24.000	40.000	-P800	14L35	forced	34
700	58	406	58	1.7	41.000	40.000	-P800	17N23	natural	30
700	58	451	58	1.6	77.000	40.000	-P800	19S42	natural	30
700	58	613	58	1.1	77.000	40.000	-P800	19S23	natural	30
700	50	237	50	2.8	24.000	40.000	-P800	14L20	natural	30
700	41	451	41	1.6	24.000	40.000	-P800	14L16	forced	34
713	75	128	75	4.8	27.000	16.000	-P800	14L35	forced	34
745	75	149	75	4.3	27.000	16.000	-P800	14L16	forced	34
800	83	97	83	5.8	84.000	12.000	-P800	19S42	natural	30
800	83	153	83	4.3	84.000	12.000	-P800	19S23	natural	30
800	83	188	83	3.6	48.000	12.000	-P800	17N35	forced	34
800	83	220	83	3.2	48.000	12.000	-P800	17N17	forced	34



Selection tables

2-stage gearboxes

Inverter operation						i	Product		Cooling	
$M_{2, max}$ [Nm]	$n_{2, th}$ [r/min]	M_2 [Nm]	$n_{2, eto}$ [r/min]	c	J [kgcm²]		g700	MCA		
800	75	106	75	5.5	43.000	16.000	-P800	17N41	natural	30
800	75	128	75	4.8	43.000	16.000	-P800	17N23	natural	30
800	75	149	75	4.3	79.000	16.000	-P800	19S42	natural	30
800	75	223	75	3.2	79.000	16.000	-P800	19S23	natural	30
800	75	270	75	2.7	43.000	16.000	-P800	17N35	forced	34
800	75	313	75	2.4	43.000	16.000	-P800	17N17	forced	34
800	70	147	70	4.4	43.000	20.000	-P800	17N41	natural	30
800	70	175	70	3.9	26.000	20.000	-P800	14L35	forced	34
800	70	175	70	3.9	43.000	20.000	-P800	17N23	natural	30
800	70	201	70	3.5	26.000	20.000	-P800	14L16	forced	34
800	70	201	70	3.5	79.000	20.000	-P800	19S42	natural	30
800	70	294	70	2.6	79.000	20.000	-P800	19S23	natural	30
800	70	352	70	2.2	43.000	20.000	-P800	17N35	forced	34
800	70	404	70	1.9	43.000	20.000	-P800	17N17	forced	34
800	59	128	59	4.9	26.000	32.000	-P800	14L41	natural	30
800	59	159	59	4.2	15.000	32.000	-P800	13I34	forced	34
800	59	173	59	3.9	26.000	32.000	-P800	14L20	natural	30
800	59	269	59	2.8	42.000	32.000	-P800	17N41	natural	30
800	59	314	59	2.4	26.000	32.000	-P800	14L35	forced	34
800	59	314	59	2.4	42.000	32.000	-P800	17N23	natural	30
800	59	356	59	2.2	78.000	32.000	-P800	19S42	natural	30
800	59	490	59	1.6	78.000	32.000	-P800	19S23	natural	30
800	59	572	59	1.4	42.000	32.000	-P800	17N35	forced	34
800	53	647	53	1.2	42.000	32.000	-P800	17N17	forced	34
800	51	356	51	2.2	26.000	32.000	-P800	14L16	forced	34



Selection tables

3-stage gearboxes

Inverter operation						i	Product		Cooling	
$M_{2, max}$ [Nm]	$n_{2, th}$ [r/min]	M_2 [Nm]	$n_{2, eto}$ [r/min]	c	J [kgcm²]		g700	MCA		
230	29	209	29	1.1	4.900	120.000	-P260	10I40	natural	28
260	58	104	58	2.4	3.700	60.000	-P260	10I40	natural	28
260	58	216	58	1.2	9.600	60.000	-P260	13I41	natural	28
260	44	144	44	1.8	3.900	80.000	-P260	10I40	natural	28
260	35	180	35	1.4	3.900	100.000	-P260	10I40	natural	28



Dimensions, notes

Notes on the dimensions

The following legend shows the layout of the dimension sheets.

Product gearbox

g700-P44

Driven shaft design

Abmessungen mit Vollwelle

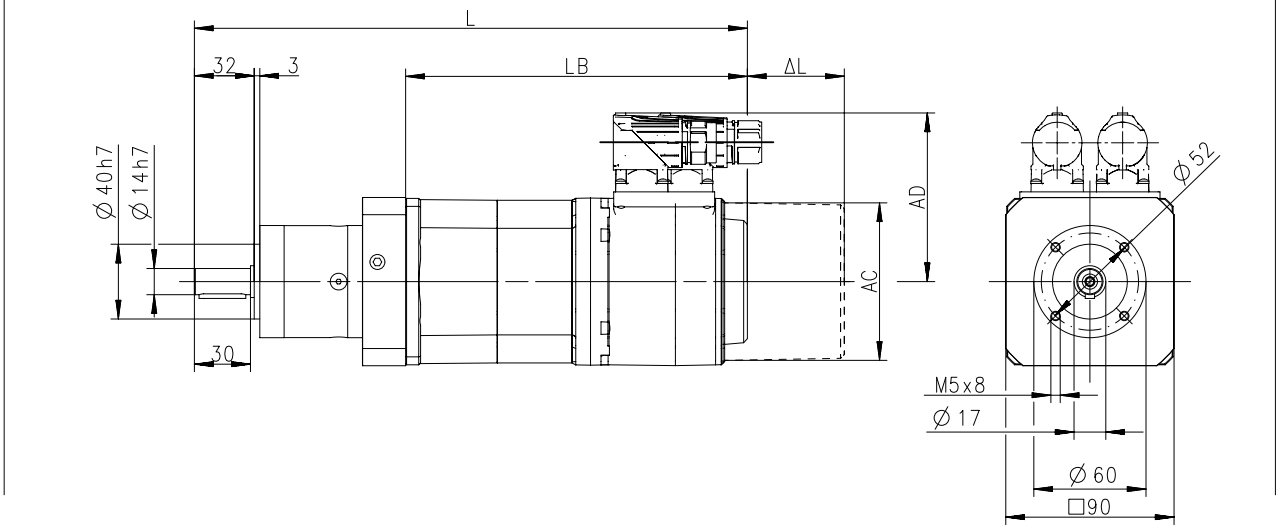

Product Motor

Produkt			MCS				
			06C41	06F41	06I41	09D41	09F38
Abmessungen							
Gesamtlänge	**L**	**[mm]**	~~238~~	268	298	296	316
Länge Motor	**LB**	**[mm]**	~~132~~	162	192	183	203
Länge Motoranbauten	**Δ L**	**[mm]**	100			71	
Motordurchmesser	**AC**	**[mm]**	86			89	
Abstand Motor/Anschluss	**AD**	**[mm]**	77			89.7	

Distance of motor centre to the end of connector

Total length of the drive without built-on accessories

Motor diameter

Motor length without built-on accessories

Additional length of the built-on accessories (longest version)



Dimensions, self-ventilated motors

g700-P130, 1-stage gearboxes

Dimensions with solid shaft and Flange

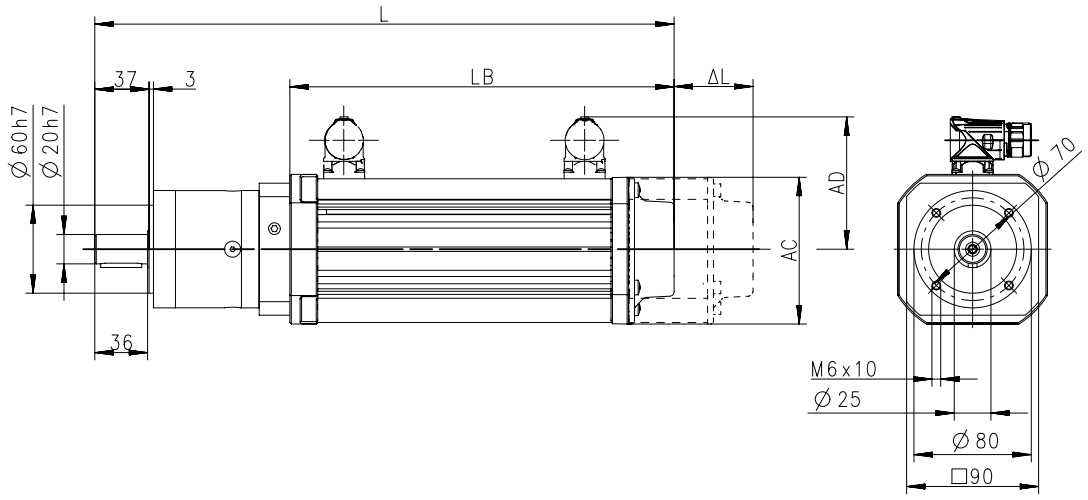

Product			MCA
			10I40
Length			
Total length	**L**	**[mm]**	395
Motor length	**LB**	**[mm]**	262
Length of motor options	**Δ L**	**[mm]**	78.5
Motor diameter	**AC**	**[mm]**	102
Distance motor/connection	**AD**	**[mm]**	90

6.1.2



Dimensions, self-ventilated motors

g700-P130, 2-stage gearboxes

Dimensions with solid shaft and Flange

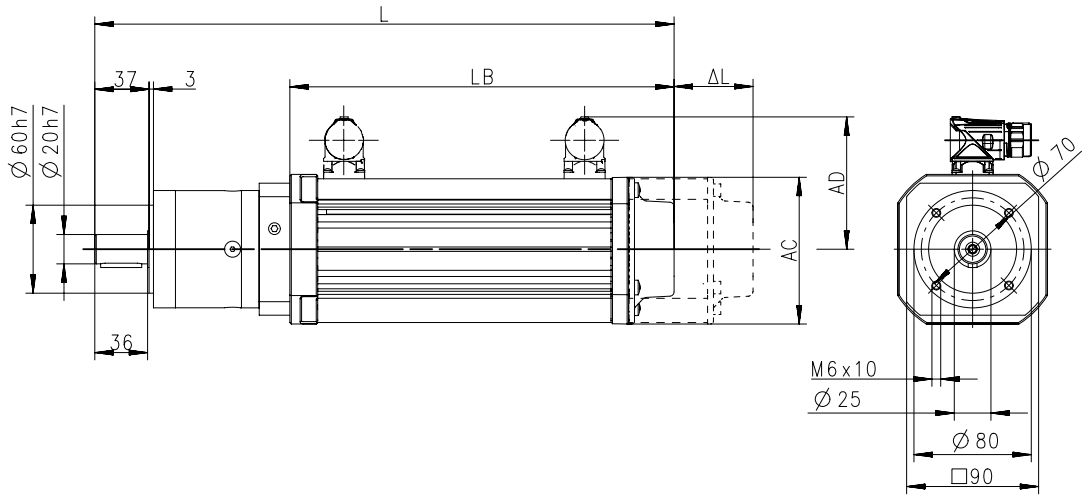

Product			MCA
			10I40
Length			
Total length	**L**	**[mm]**	413
Motor length	**LB**	**[mm]**	262
Length of motor options	**Δ L**	**[mm]**	78.5
Motor diameter	**AC**	**[mm]**	102
Distance motor/connection	**AD**	**[mm]**	90



Dimensions, self-ventilated motors

g700-P260, 1-stage gearboxes

Dimensions with solid shaft and Flange

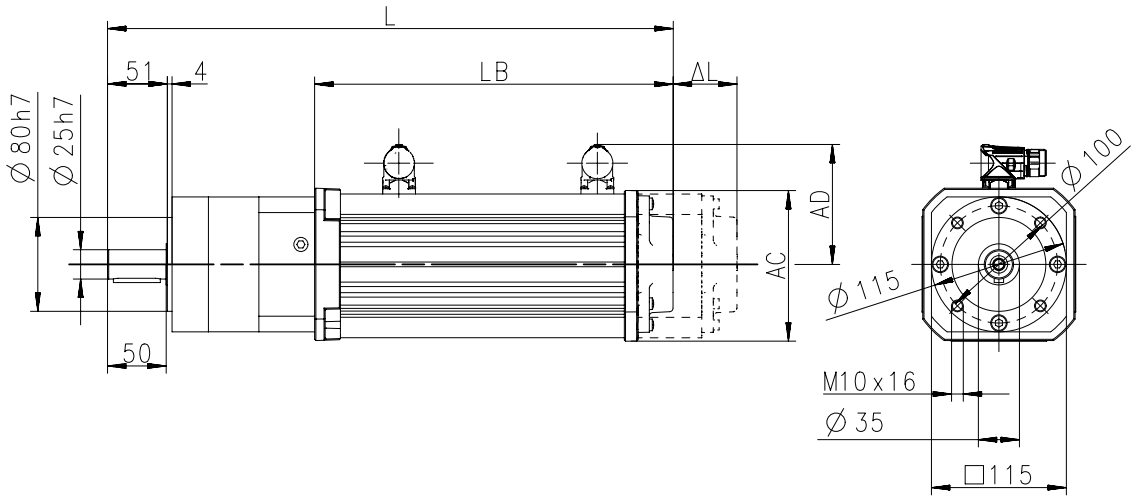

Product			MCA			
			10I40	13I41	14L20	14L41
Length						
Total length	**L**	**[mm]**	438	447	478	
Motor length	**LB**	**[mm]**	262	270.5	301.5	
Length of motor options	**Δ L**	**[mm]**	78.5	89	88.5	
Motor diameter	**AC**	**[mm]**	102	130	142	
Distance motor/connection	**AD**	**[mm]**	90	102	109	



Dimensions, self-ventilated motors

g700-P260, 2-stage gearboxes

Dimensions with solid shaft and Flange

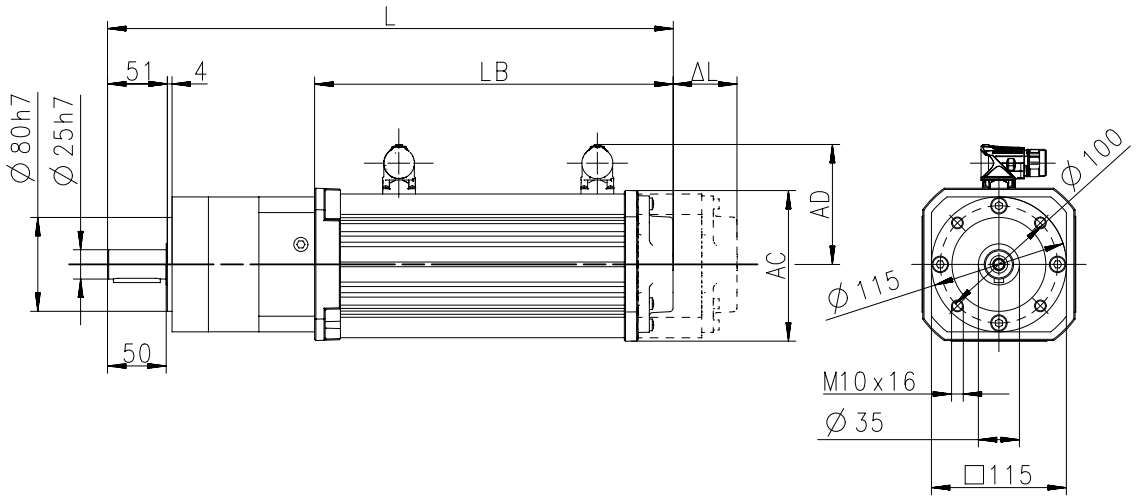

Product			MCA			
			10I40	13I41	14L20	14L41
Length						
Total length	**L**	**[mm]**	466	474	505	
Motor length	**LB**	**[mm]**	262	270.5	301.5	
Length of motor options	**Δ L**	**[mm]**	78.5	89	88.5	
Motor diameter	**AC**	**[mm]**	102	130	142	
Distance motor/connection	**AD**	**[mm]**	90	102	109	



Dimensions, self-ventilated motors

g700-P260, 3-stage gearboxes

Dimensions with solid shaft and Flange

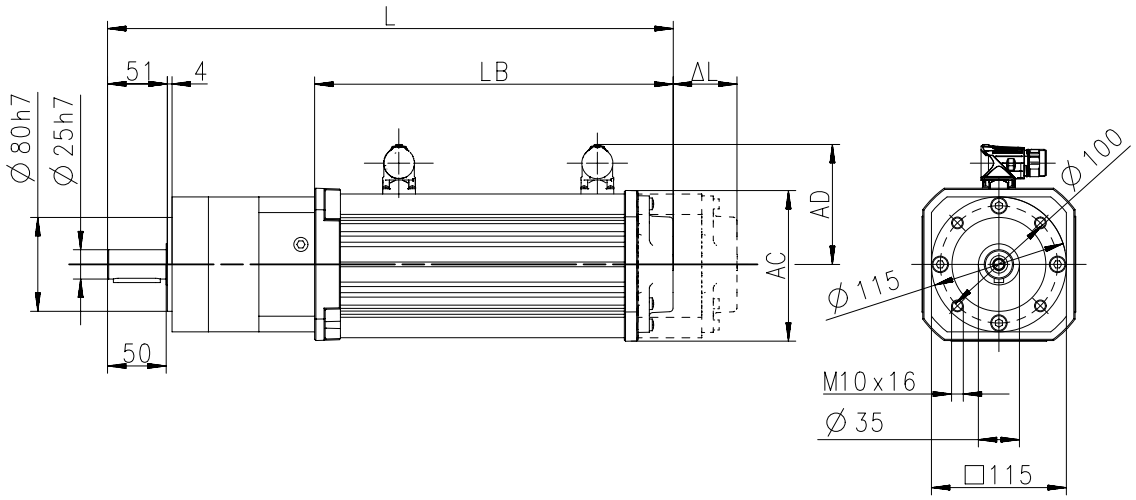

Product			MCA	
			10I40	13I41
Length				
Total length	**L**	**[mm]**	493	502
Motor length	**LB**	**[mm]**	262	270.5
Length of motor options	**Δ L**	**[mm]**	78.5	89
Motor diameter	**AC**	**[mm]**	102	130
Distance motor/connection	**AD**	**[mm]**	90	102



Dimensions, self-ventilated motors

g700-P800, 1-stage gearboxes

Dimensions with solid shaft and Flange

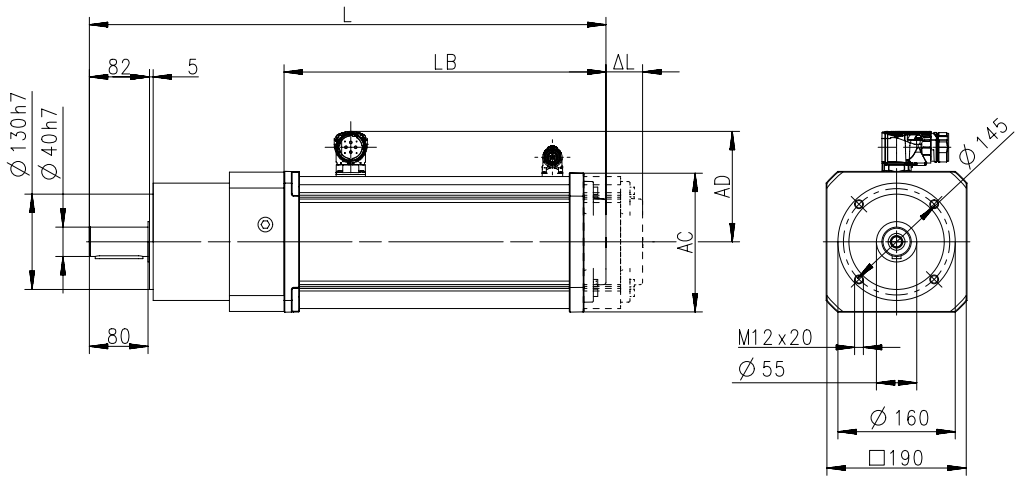

Product			MCA		
			17N23	19S23	19S42
Length					
Total length	**L**	**[mm]**	595	667	
Motor length	**LB**	**[mm]**	339.5	401	
Length of motor options	**Δ L**	**[mm]**	89.2	88.2	
Motor diameter	**AC**	**[mm]**	165	192	
Distance motor/connection	**AD**	**[mm]**	117.5	151	



Dimensions, self-ventilated motors

g700-P800, 2-stage gearboxes

Dimensions with solid shaft and Flange

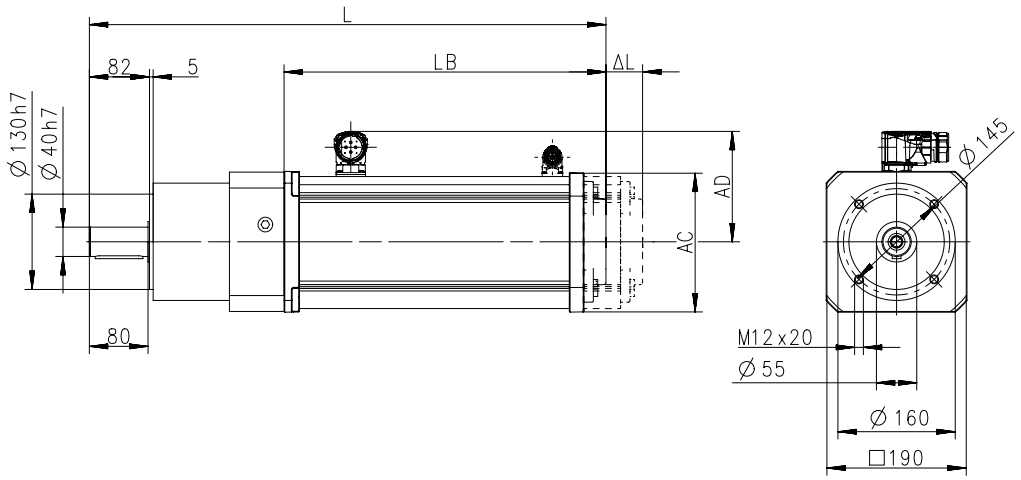

Product			MCA						
			13I41	14L20	14L41	17N23	17N41	19S23	19S42
Length									
Total length	**L**	**[mm]**	576	607		645		716	
Motor length	**LB**	**[mm]**	270.5	301.5		339.5		401	
Length of motor options	**Δ L**	**[mm]**	89	88.5		89.2		88.2	
Motor diameter	**AC**	**[mm]**	130	142		165		192	
Distance motor/connection	**AD**	**[mm]**	102	109		117.5		151	



Dimensions, forced ventilated motors

g700-P260, 1-stage gearboxes

Dimensions with solid shaft and Flange

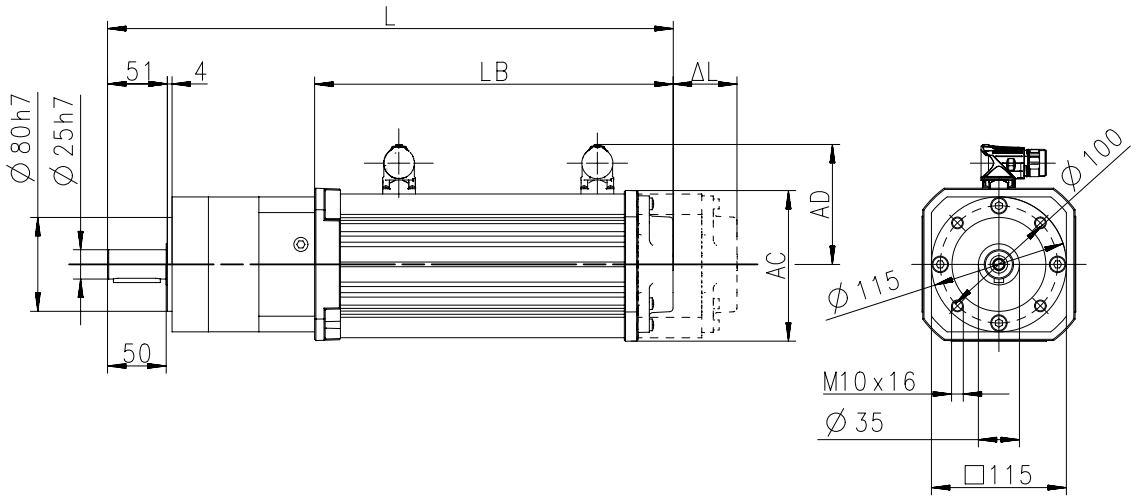

Product			MCA
			13I34
Length			
Total length	**L**	**[mm]**	515
Motor length	**LB**	**[mm]**	338.5
Length of motor options	**Δ L**	**[mm]**	89.5
Motor diameter	**AC**	**[mm]**	130
Distance motor/connection	**AD**	**[mm]**	102



Dimensions, forced ventilated motors

g700-P260, 2-stage gearboxes

Dimensions with solid shaft and Flange

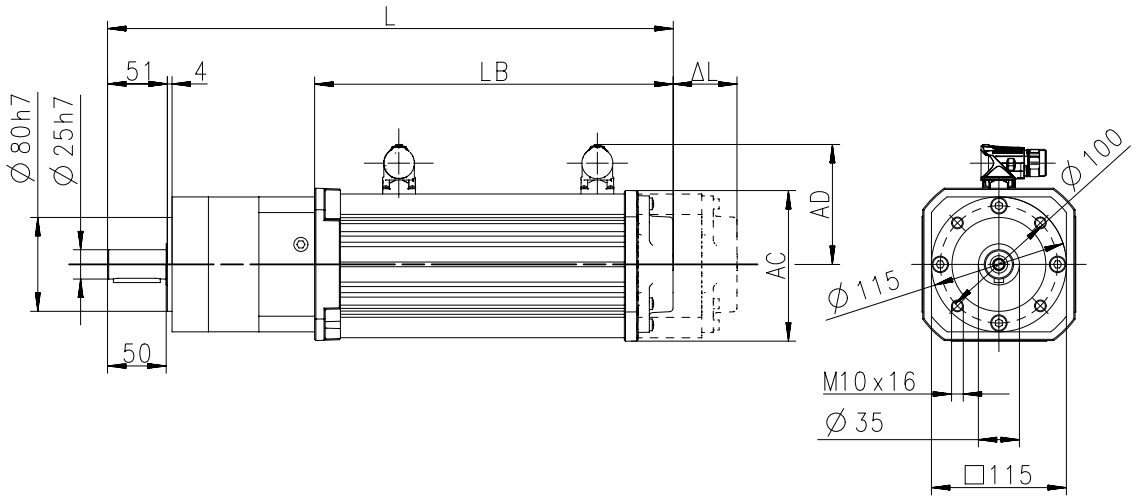

Product			MCA
			13I34
Length			
Total length	**L**	**[mm]**	542
Motor length	**LB**	**[mm]**	338.5
Length of motor options	**Δ L**	**[mm]**	89.5
Motor diameter	**AC**	**[mm]**	130
Distance motor/connection	**AD**	**[mm]**	102

6.1.2



Dimensions, forced ventilated motors

g700-P800, 1-stage gearboxes

Dimensions with solid shaft and Flange

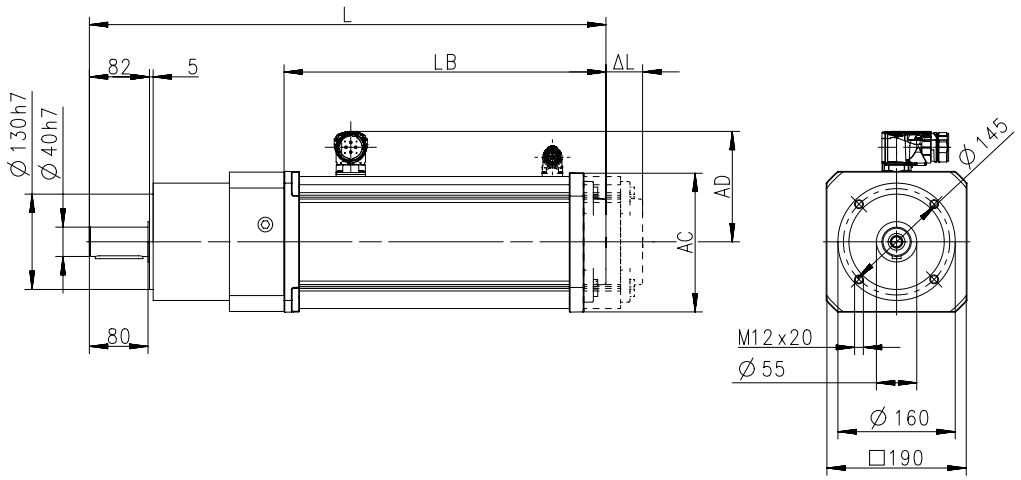

Product			MCA			
			14L16	14L35	17N17	17N35
Length						
Total length	**L**	**[mm]**	619		681	
Motor length	**LB**	**[mm]**	363.5		425.5	
Length of motor options	**Δ L**	**[mm]**	88.5		89	
Motor diameter	**AC**	**[mm]**	142		165	
Distance motor/connection	**AD**	**[mm]**	109		117.5	



Dimensions, forced ventilated motors

g700-P800, 2-stage gearboxes

Dimensions with solid shaft and Flange

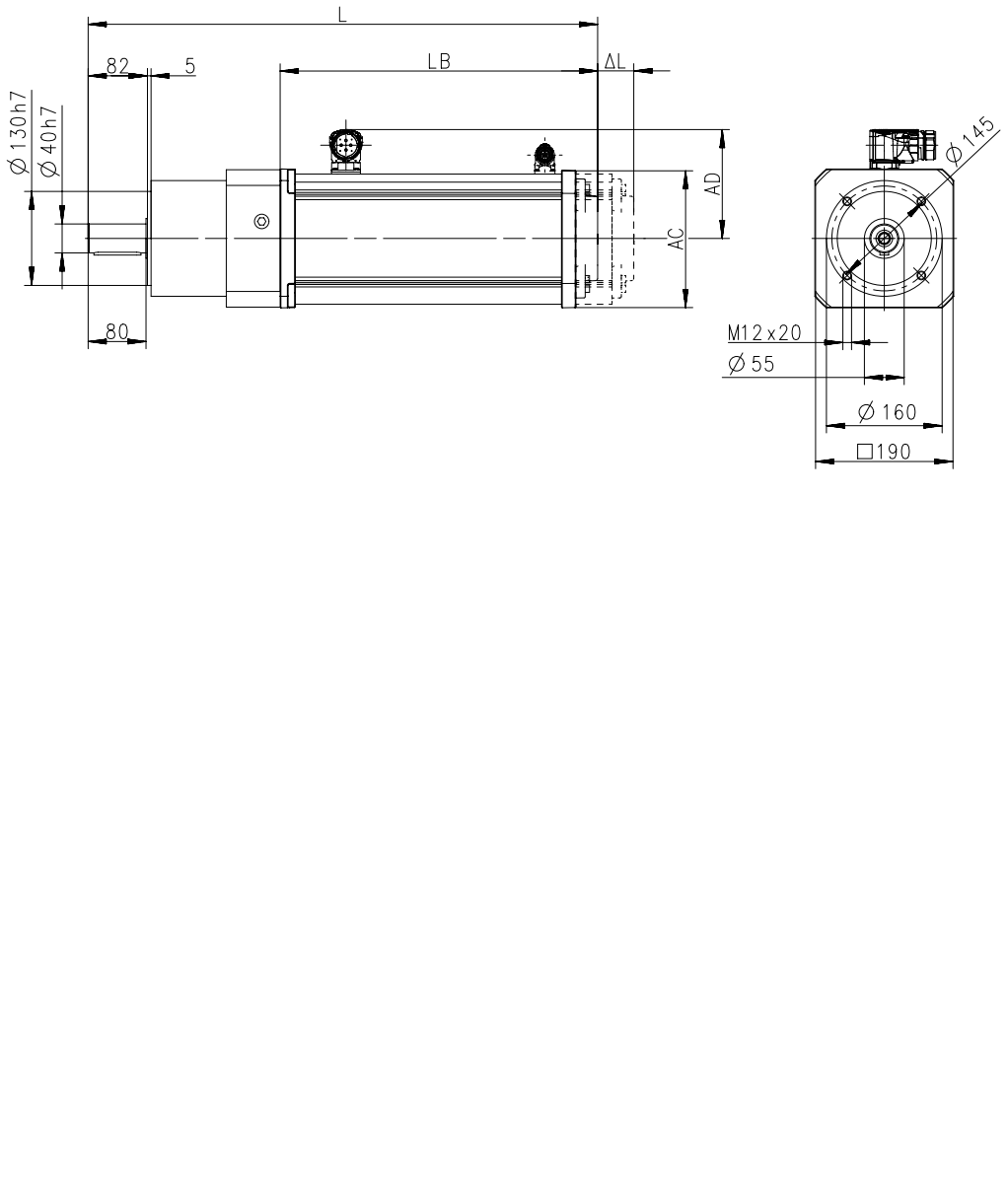

Product			MCA				
			13I34	14L16	14L35	17N17	17N35
Length							
Total length	**L**	**[mm]**	644	669		731	
Motor length	**LB**	**[mm]**	338.5	363.5		425.5	
Length of motor options	**Δ L**	**[mm]**	89.5	88.5		89	
Motor diameter	**AC**	**[mm]**	130	142		165	
Distance motor/connection	**AD**	**[mm]**	102	109		117.5	



Weights, self-ventilated motors

1-stage gearboxes

				MCA				
				10I40	13I41	14L20 14L41	17N23	19S23 19S42
g700	-P130	m	[kg]	8.5				
	-P260	m	[kg]	12	16	21		
	-P800	m	[kg]				41	63

2-stage gearboxes

				MCA				
				10I40	13I41	14L20 14L41	17N23 17N41	19S23 19S42
g700	-P130	m	[kg]	9.0				
	-P260	m	[kg]	14	18	23		
	-P800	m	[kg]		32	37	45	67

3-stage gearboxes

				MCA	
				10I40	13I41
g700	-P260	m	[kg]	16	20



Weights, forced ventilated motors

1-stage gearboxes

				MCA		
				13I34	14L16 14L35	17N17 17N35
g700	-P260	m	[kg]	18		
	-P800	m	[kg]		35	44

2-stage gearboxes

				MCA		
				13I34	14L16 14L35	17N17 17N35
g700	-P260	m	[kg]	20		
	-P800	m	[kg]	34	39	48



Surface and corrosion protection

For optimum protection of geared motors against ambient conditions, the surface and corrosion protection system (OKS) offers tailor-made solutions.

Various surface coatings combined with other protective measures ensure that the geared motors operate reliably even at high air humidity, in outdoor installations or in the presence of atmospheric impurities. Any colour from the RAL Classic collection can be chosen for the top coat. The geared motors are also available unpainted (no surface and corrosion protection).

Surface and corrosion protection	Applications	Measures
OKS-G (primed)	• Dependent on subsequent top coat applied	• 2K PUR priming coat (grey) • Zinc-coated screws • Rust-free breather elements Optional measures • Stainless steel nameplate
-	• Standard applications • Internal installation in heated buildings • Air humidity up to 90%	• Surface coating as per corrosivity category C1 (in line with EN 12944-2) • Zinc-coated screws • Rust-free breather elements Optional measures • Stainless steel nameplate
OKS-M (medium)	• Internal installation in non-heated buildings • Covered, protected external installation • Air humidity up to 95%	• Surface coating as per corrosivity category C2 (in line with EN 12944-2) • Zinc-coated screws • Rust-free breather elements Optional measures • Stainless steel shaft • Stainless steel nameplate • Rust-free shrink disc (on request)
OKS-L (large)	• External installation • Air humidity above 95% • Chemical industry plants • Food industry	• Surface coating as per corrosivity category C3 (in line with EN 12944-2) - -



Surface and corrosion protection

Structure of surface coating

Surface and corrosion protection	Corrosivity category	Surface coating	Colour
	DIN EN ISO 12944-2	Structure	
Without OKS(uncoated)		Dipping primed gearbox	
OKS-G (primed)		Dipping primed gearbox 2K PUR priming coat	
-	C1	Dipping primed gearbox 2K-PUR top coat	Standard: RAL 7012 Optional: RAL Classic
OKS-M (medium)	C2	Dipping primed gearbox 2K PUR priming coat 2K-PUR top coat	
OKS-L (large)	C3		





g700-P planetary gearboxes

20 to 800 Nm

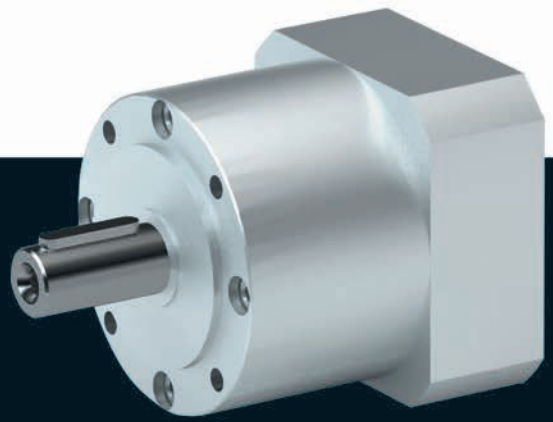

g700-P planetary gearbox

Contents



General information	List of abbreviations	6.1.3 - 5
	Product information	6.1.3 - 6
	Equipment	6.1.3 - 7
	The gearbox kit	6.1.3 - 8
	Functions and features	6.1.3 - 10
Technical data	Permissible radial and axial forces at output	6.1.3 - 11
	Backlash and torsional rigidity	6.1.3 - 12
	Speeds and torques	6.1.3 - 12
	Moments of inertia	6.1.3 - 16

g700-P planetary gearbox

Contents





List of abbreviations

$F_{ax,max}$	[N]	Max. axial force
$F_{rad,max}$	[N]	Max. radial force
i		Ratio
J	[kgcm²]	Moment of inertia
m	[kg]	Mass

g700-P planetary gearbox

General information



Product information

The planetary gearbox g700 is the ideal solution for demanding and dynamic tasks. With its high reliability, long service life and outstanding scalability, it provides everything you need to manage demanding machine tasks.

Versions

- High input speed possible Max. input speed 18000 rpm
- Wide variety of ratios i= 3...512 in 24 ratios
- High rated torque bandwidth 20 ... 800 Nm in five sizes
- Lifetime lubrication
- Suitable for any mounting position, hence only one variant

The product name

Gearbox type	Product range		Design	Rated torque [Nm]	Product
Planetary gearbox	g700	-	P	20	g700-P20
				44	g700-P44
				130	g700-P130
				260	g700-P260
				800	g700-P800

6.1.3



Equipment

Overview

The equipment includes all the options available as standard and all the built-on accessories of the product.

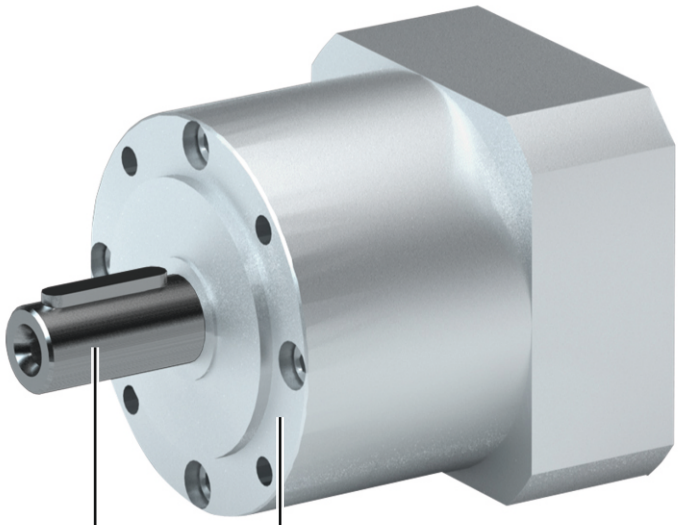

Output shaft
Solid shaft with featherkey

Housing design
Threaded pitch circle with centering



The gearbox kit

Gearbox details

Product					
	g700-P20	g700-P44	g700-P130	g700-P260	g700-P800
Driven shaft					
Solid shaft with featherkey [mm]	10x23	14x30	20x36	25x50	40x80
Design	Standard				
Gasket	NBR				
Bearing	Standard				
Housing					
Housing version	Without foot with centering				
Output flange					
flange diameter [mm]	40	60	80	115	160
Lubricant					
Type	Klüberplex BEM34-132				
Breather element	Without				
Backlash					
Backlash	Standard				

► Further information and installation feasibilities can be found in the Gearboxes chapter.



The gearbox kit

Gearbox details

Solid shaft
 With centering



Functions and features

Product	g700-P20	g700-P44	g700-P130	g700-P260	g700-P800
Housing					
Design	Cylindrical shape				
Solid shaft					
Design	with keyway to DIN 6885				
Tolerance	h7				
Toothed parts					
Design	Spur-toothed				
Ratios	Mathematically precise				
Shaft-hub joint					
	Force-fit, motor gearbox connected via clamping hub				
Lubricants					
Changing interval	Lubricated for life				
Quantities	Can be installed in any orientation				
Mechanical efficiency					
1-stage gearboxes [$\eta_{c=1}$]	0.96				
2-stage gearboxes [$\eta_{c=1}$]	0.94				
3-stage gearboxes [$\eta_{c=1}$]	0.90				

Direction of rotation



6.1.3



Permissible radial and axial forces at output

Permissible radial force
$F_{rad,per} = F_{radmax}$ if $F_{ax} = 0$

Permissible axial force
$F_{ax,per} = F_{ax,max}$ if $F_{rad} = 0$

► If F_{rad} **and** $F_{ax} \neq 0$, please contact Lenze.

Application of forces
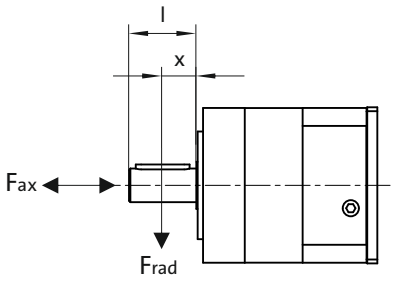

Product	n_2 [r/min]
	100

	Max. radial force, Solid shaft with flange	Max. axial force, Solid shaft with flange
	$F_{rad,max}$	$F_{ax,max}$
	[N]	[N]
g700-P20	200	200
g700-P44	500	400
g700-P130	1000	750
g700-P260	2500	1750
g700-P800	7000	5000

► Application of force F_{rad}: centre of shaft journal (x = l/2)
► $F_{ax,max}$ only valid with $F_{rad} = 0$



Backlash and torsional rigidity

1-stage gearboxes

Product	Backlash	Torsional stiffness
	[arcmin]	[Nm/arcmin]
g700-P20	15.0	1.00
g700-P44	10.0	2.30
g700-P130	7.00	6.00
g700-P260		12.0
g700-P800	6.00	38.0

2-stage gearboxes

Product	Backlash	Torsional stiffness
	[arcmin]	[Nm/arcmin]
g700-P20	19.0	1.10
g700-P44	12.0	2.50
g700-P130	9.00	6.50
g700-P260		13.0
g700-P800	10.0	41.0

3-stage gearboxes

Product	Backlash	Torsional stiffness
	[arcmin]	[Nm/arcmin]
g700-P20	22.0	1.00
g700-P44	15.0	2.50
g700-P130	11.0	6.30
g700-P260		12.0

► The backlash is measured with 1 % of the rated torque, at least 1 Nm.



Speeds and torques

- **Rated torque $M_{2, GN}$**
  At rated speed, ambient temperature 30 °C and duty type S1.
- **Max. output torque $M_{2, max}$**
  At output speed 100 r/min , duty type S1, uniform and shock-free motion.
- **Emergency off torque $M_{2, not}$**
  Max.1000 emergency switching off actions during gearbox service life
- **Max. gearbox input speed**
  $n_{1, max\ 50\%}$
  Max. medium speed at 50 % rated torque
  $n_{1, max\ 100\%}$
  Max. medium speed at 100 % rated torque
  $n_{1, max}$
  Max. permissible speed

1-stage gearboxes

Product	Ratio	Rated torque	Max. output torque	Max. gearbox input speed			Emergency off-torque
	i	$M_{2, GN}$	$M_{2, max}$	$n_{1, max\ 50\%}$	$n_{1, max\ 100\%}$	$n_{1, max}$	$M_{2, not}$
		[Nm]	[Nm]	[r/min]	[r/min]	[r/min]	[Nm]
g700-P20	3.000	11	18	5000	5000	18000	23
	4.000	15	24	5000	5000		30
	5.000	14	22	5000	5000		36
	7.000	9	14	5000	5000		26
	8.000	6	10	5000	5000		27
	10.000	5	8	5000	5000		27
g700-P44	3.000	28	45	4500	4500	13000	66
	4.000	38	61	4500	4500		88
	5.000	40	64	4500	4500		80
	7.000	25	40	4500	4500		80
	8.000	18	29	4500	4500		80
	10.000	15	24	4500	4500		80
g700-P130	3.000	85	136	4000	2700	7000	180
	4.000	115	184	3850	2500		240
	5.000	110	176	4000	3000		220
	7.000	65	104	4000	4000		178
	8.000	50	80	4000	4000		190
	10.000	38	61	4000	4000		200
g700-P260	3.000	115	184	3350	2550	6500	390
	4.000	155	248	3400	2500		520
	5.000	195	312	3500	2500		500
	7.000	135	216	3500	3500		340
	8.000	120	192	3500	3500		380
	10.000	95	152	3500	3500		480
g700-P800	3.000	400	640	1350	900	6500	800
	4.000	450	720	1450	1000		900
	5.000	450	720	1650	1150		900
	8.000	450	720	2150	1550		900



Speeds and torques

2-stage gearboxes

Product	Ratio	Rated torque	Max. output torque	Max. gearbox input speed			Emergency off-torque
	i	$M_{2, GN}$	$M_{2, max}$	$n_{1, max\ 50\%}$	$n_{1, max\ 100\%}$	$n_{1, max}$	$M_{2, not}$
		[Nm]	[Nm]	[r/min]	[r/min]	[r/min]	[Nm]
g700-P20	9.000	17	26	5000	5000	18000	33
	12.000	20	32	5000	5000		40
	15.000	18	29	5000	5000		36
	16.000	20	32	5000	5000		40
	20.000	20	32	5000	5000		40
	25.000	18	29	5000	5000		36
	32.000	20	32	5000	5000		40
	40.000	18	29	5000	5000		36
	64.000	8	12	5000	5000		27
g700-P44	9.000	44	70	4500	4500	13000	88
	12.000	44	70	4500	4500		88
	15.000	44	70	4500	4500		88
	16.000	44	70	4500	4500		88
	20.000	44	70	4500	4500		88
	25.000	40	64	4500	4500		80
	32.000	44	70	4500	4500		88
	40.000	40	64	4500	4500		80
	64.000	18	29	4500	4500		80
g700-P130	9.000	130	208	4000	3050	7000	260
	12.000	120	192	4000	3750		240
	15.000	110	176	4000	4000		220
	16.000	120	192	4000	4000		240
	20.000	120	192	4000	4000		240
	25.000	110	176	4000	4000		220
	32.000	120	192	4000	4000		240
	40.000	110	176	4000	4000		220
	64.000	50	80	4000	4000		190
g700-P260	9.000	210	336	3500	2650	6500	500
	12.000	260	416	3500	2650		520
	15.000	230	368	3500	3200		500
	16.000	260	416	3500	3100		520
	20.000	260	416	3500	3500		520
	25.000	230	368	3500	3500		500
	32.000	260	416	3500	3500		520
	40.000	230	368	3500	3500		500
	64.000	120	192	3500	3500		380
g700-P800	12.000	800	1280	1550	1000	6500	1600
	15.000	700	1120	1850	1300		1400
	16.000	800	1280	1750	1200		1600
	20.000	800	1280	2050	1400		1600
	25.000	700	1120	2350	1700		1400
	32.000	800	1280	2650	1900		1600
	40.000	700	1120	2950	2300		1400
	64.000	450	720	3000	3000		900



Speeds and torques

3-stage gearboxes

Product	Ratio	Rated torque	Max. output torque	Max. gearbox input speed			Emergency off-torque
	i	$M_{2, GN}$	$M_{2, max}$	$n_{1, max\ 50\%}$	$n_{1, max\ 100\%}$	$n_{1, max}$	$M_{2, not}$
		[Nm]	[Nm]	[r/min]	[r/min]	[r/min]	[Nm]
g700-P20	60.000	20	32	5000	5000	18000	40
	80.000	20	32	5000	5000		40
	100.000	20	32	5000	5000		40
	120.000	18	29	5000	5000		36
	160.000	20	32	5000	5000		40
	200.000	18	29	5000	5000		36
	256.000	20	32	5000	5000		40
	320.000	18	29	5000	5000		36
	512.000	8	12	5000	5000		27
g700-P44	60.000	44	70	4500	4500	13000	88
	80.000	44	70	4500	4500		88
	100.000	44	70	4500	4500		88
	120.000	44	70	4500	4500		88
	160.000	44	70	4500	4500		88
	200.000	40	64	4500	4500		80
	256.000	44	70	4500	4500		88
	320.000	40	64	4500	4500		80
	512.000	18	29	4500	4500		80
g700-P130	60.000	110	176	4000	4000	7000	220
	80.000	120	192	4000	4000		240
	100.000	120	192	4000	4000		240
	120.000	110	176	4000	4000		220
	160.000	120	192	4000	4000		240
	200.000	110	176	4000	4000		220
	256.000	120	192	4000	4000		240
	320.000	110	176	4000	4000		220
	512.000	50	80	4000	4000		190
g700-P260	60.000	260	416	3500	3500	6500	520
	80.000	260	416	3500	3500		520
	100.000	260	416	3500	3500		520
	120.000	230	368	3500	3500		500
	160.000	260	416	3500	3500		520
	200.000	230	368	3500	3500		500
	256.000	260	416	3500	3500		520
	320.000	230	368	3500	3500		500
	512.000	120	192	3500	3500		380



Moments of inertia

- The moments of inertia relate to the drive shaft of the gearbox.
- The total moment of inertia is calculated by adding the values of the gearbox, motor and accessories.

1-stage gearboxes

Product	Dimensions	Ratio	Moment of inertia
	Motor shaft diameter		
	d	i	J
	[mm]		[kgcm²]
g700-P20	11	3.000	0.065
	11	4.000	0.056
	11	5.000	0.053
	11	7.000	0.052
	11	8.000	0.051
	11	10.000	0.043
g700-P44	11	3.000	0.134
	11	4.000	0.092
	11	5.000	0.077
	11	7.000	0.071
	11	8.000	0.064
	11	10.000	0.130
	14	3.000	0.108
	14	4.000	0.066
	14	5.000	0.051
	14	7.000	0.014
	14	8.000	0.038
	14	10.000	0.014
g700-P130	11	3.000	0.770
	11	4.000	0.520
	11	5.000	0.450
	11	7.000	0.420
	11	8.000	0.390
	11	10.000	0.740
	14	3.000	0.770
	14	4.000	0.520
	14	5.000	0.450
	14	7.000	0.420
	14	8.000	0.390
	14	10.000	0.740
	19	3.000	0.770
	19	4.000	0.520
	19	5.000	0.450
	19	7.000	0.420
	19	8.000	0.390
	19	10.000	0.740
g700-P260	11	3.000	2.662
	11	4.000	1.822
	11	5.000	1.562
	11	7.000	1.442
	11	8.000	1.352
	11	10.000	2.652

Product	Dimensions	Ratio	Moment of inertia
	Motor shaft diameter		
	d	i	J
	[mm]		[kgcm²]
g700-P260	14	3.000	2.655
	14	4.000	1.815
	14	5.000	1.555
	14	7.000	1.435
	14	8.000	1.345
	14	10.000	2.645
	19	3.000	2.630
	19	4.000	1.790
	19	5.000	1.530
	19	7.000	1.410
	19	8.000	1.320
	19	10.000	2.620
	24	3.000	2.574
	24	4.000	1.734
	24	5.000	1.474
	24	7.000	1.354
	24	8.000	1.264
	24	10.000	2.564
	28	3.000	4.897
	28	4.000	4.057
	28	5.000	3.797
	28	7.000	3.687
	28	8.000	3.587
	28	10.000	4.887
g700-P800	19	3.000	12.211
	19	4.000	7.851
	19	5.000	6.141
	19	8.000	4.701
	24	3.000	12.140
	24	4.000	7.780
	24	5.000	6.070
	24	8.000	4.630
	28	3.000	12.040
	28	4.000	7.680
	28	5.000	5.970
	28	8.000	4.530



Moments of inertia

2-stage gearboxes

Product	Dimensions	Ratio	Moment of inertia
	Motor shaft diameter		
	d	i	J
	[mm]		[kgcm²]
g700-P20	11	9.000	0.064
	11	12.000	0.063
	11	15.000	0.057
	11	16.000	0.056
	11	20.000	0.053
	11	25.000	0.053
	11	32.000	0.051
	11	40.000	0.050
	11	64.000	0.063
g700-P44	11	9.000	0.063
	11	12.000	0.126
	11	15.000	0.076
	11	16.000	0.087
	11	20.000	0.074
	11	25.000	0.074
	11	32.000	0.063
	11	40.000	0.063
	11	64.000	0.075
	14	9.000	0.064
	14	12.000	0.100
	14	15.000	0.050
	14	16.000	0.061
	14	20.000	0.048
	14	25.000	0.048
	14	32.000	0.014
	14	40.000	0.037
	14	64.000	0.049
g700-P130	11	9.000	0.390
	11	12.000	0.720
	11	15.000	0.710
	11	16.000	0.500
	11	20.000	0.440
	11	25.000	0.440
	11	32.000	0.390
	11	40.000	0.390
	11	64.000	0.510
	14	9.000	0.390
	14	12.000	0.720
	14	15.000	0.710
	14	16.000	0.500
	14	20.000	0.440
	14	25.000	0.440
	14	32.000	0.390
	14	40.000	0.390
	14	64.000	0.510
	19	9.000	0.390
	19	12.000	0.720
	19	15.000	0.710
	19	16.000	0.500
	19	20.000	0.440
	19	25.000	0.440
	19	32.000	0.390
	19	40.000	0.390
	19	64.000	0.510

Product	Dimensions	Ratio	Moment of inertia
	Motor shaft diameter		
	d	i	J
	[mm]		[kgcm²]
g700-P260	11	9.000	1.332
	11	12.000	2.592
	11	15.000	2.562
	11	16.000	1.782
	11	20.000	1.532
	11	25.000	1.522
	11	32.000	1.332
	11	40.000	1.332
	11	64.000	2.602
	14	9.000	1.325
	14	12.000	2.585
	14	15.000	2.555
	14	16.000	1.775
	14	20.000	1.525
	14	25.000	1.515
	14	32.000	1.325
	14	40.000	1.325
	14	64.000	2.595
	19	9.000	1.300
	19	12.000	2.560
	19	15.000	2.530
	19	16.000	1.750
	19	20.000	1.500
	19	25.000	1.490
	19	32.000	1.300
	19	40.000	1.300
	19	64.000	2.570
	24	9.000	1.244
	24	12.000	2.504
	24	15.000	2.474
	24	16.000	1.694
	24	20.000	1.444
	24	25.000	1.434
	24	32.000	1.244
	24	40.000	1.244
	24	64.000	2.514
	28	9.000	3.567
	28	12.000	4.827
	28	15.000	4.797
	28	16.000	4.017
	28	20.000	3.767
	28	25.000	3.757
	28	32.000	3.567
	28	40.000	3.567
	28	64.000	4.837



Moments of inertia

2-stage gearboxes

Product	Dimensions	Ratio	Moment of inertia
	Motor shaft diameter		
	d	i	J
	[mm]		[kgcm²]
g700-P800	19	12.000	12.441
	19	15.000	12.421
	19	16.000	7.541
	19	20.000	6.721
	19	25.000	5.881
	19	32.000	6.431
	19	40.000	5.351
	19	64.000	4.571
	24	12.000	12.370
	24	15.000	12.350
	24	16.000	7.470
	24	20.000	6.650
	24	25.000	5.810
	24	32.000	6.360
	24	40.000	5.280
	24	64.000	4.500
	28	12.000	12.270
	28	15.000	12.250
	28	16.000	7.370
	28	20.000	6.550
	28	25.000	5.710
	28	32.000	6.260
	28	40.000	5.180
	28	64.000	4.400



Moments of inertia

3-stage gearboxes

Product	Dimensions	Ratio	Moment of inertia
	Motor shaft diameter		
	d	i	J
	[mm]		[kgcm²]
g700-P20	11	60.000	0.050
	11	80.000	0.053
	11	100.000	0.053
	11	120.000	0.063
	11	160.000	0.050
	11	200.000	0.050
	11	256.000	0.050
	11	320.000	0.050
	11	512.000	0.050
g700-P44	11	60.000	0.063
	11	80.000	0.074
	11	100.000	0.074
	11	120.000	0.063
	11	160.000	0.063
	11	200.000	0.063
	11	256.000	0.063
	11	320.000	0.063
	11	512.000	0.063
	14	60.000	0.037
	14	80.000	0.048
	14	100.000	0.048
	14	120.000	0.037
	14	160.000	0.037
	14	200.000	0.037
	14	256.000	0.037
	14	320.000	0.037
	14	512.000	0.037
g700-P130	11	60.000	0.390
	11	80.000	0.500
	11	100.000	0.440
	11	120.000	0.700
	11	160.000	0.390
	11	200.000	0.390
	11	256.000	0.390
	11	320.000	0.390
	11	512.000	0.390
	14	60.000	0.390
	14	80.000	0.500
	14	100.000	0.440
	14	120.000	0.700
	14	160.000	0.390
	14	200.000	0.390
	14	256.000	0.390
	14	320.000	0.390
	14	512.000	0.390
	19	60.000	0.390
	19	80.000	0.500
	19	100.000	0.440
	19	120.000	0.700
	19	160.000	0.390
	19	200.000	0.390
	19	256.000	0.390
	19	320.000	0.390
	19	512.000	0.390

Product	Dimensions	Ratio	Moment of inertia
	Motor shaft diameter		
	d	i	J
	[mm]		[kgcm²]
g700-P260	11	60.000	1.332
	11	80.000	1.532
	11	100.000	1.522
	11	120.000	2.532
	11	160.000	1.332
	11	200.000	1.332
	11	256.000	1.332
	11	320.000	1.332
	11	512.000	1.332
	14	60.000	1.325
	14	80.000	1.525
	14	100.000	1.515
	14	120.000	2.525
	14	160.000	1.325
	14	200.000	1.325
	14	256.000	1.325
	14	320.000	1.325
	14	512.000	1.325
	19	60.000	1.300
	19	80.000	1.500
	19	100.000	1.490
	19	120.000	2.500
	19	160.000	1.300
	19	200.000	1.300
	19	256.000	1.300
	19	320.000	1.300
	19	512.000	1.300
	24	60.000	1.244
	24	80.000	1.444
	24	100.000	1.434
	24	120.000	2.444
	24	160.000	1.244
	24	200.000	1.244
	24	256.000	1.244
	24	320.000	1.244
	24	512.000	1.244
	28	60.000	3.567
	28	80.000	3.767
	28	100.000	3.757
	28	120.000	4.767
	28	160.000	3.567
	28	200.000	3.567
	28	256.000	3.567
	28	320.000	3.567
	28	512.000	3.567



MCS synchronous servo motors

0.25 to 190 Nm

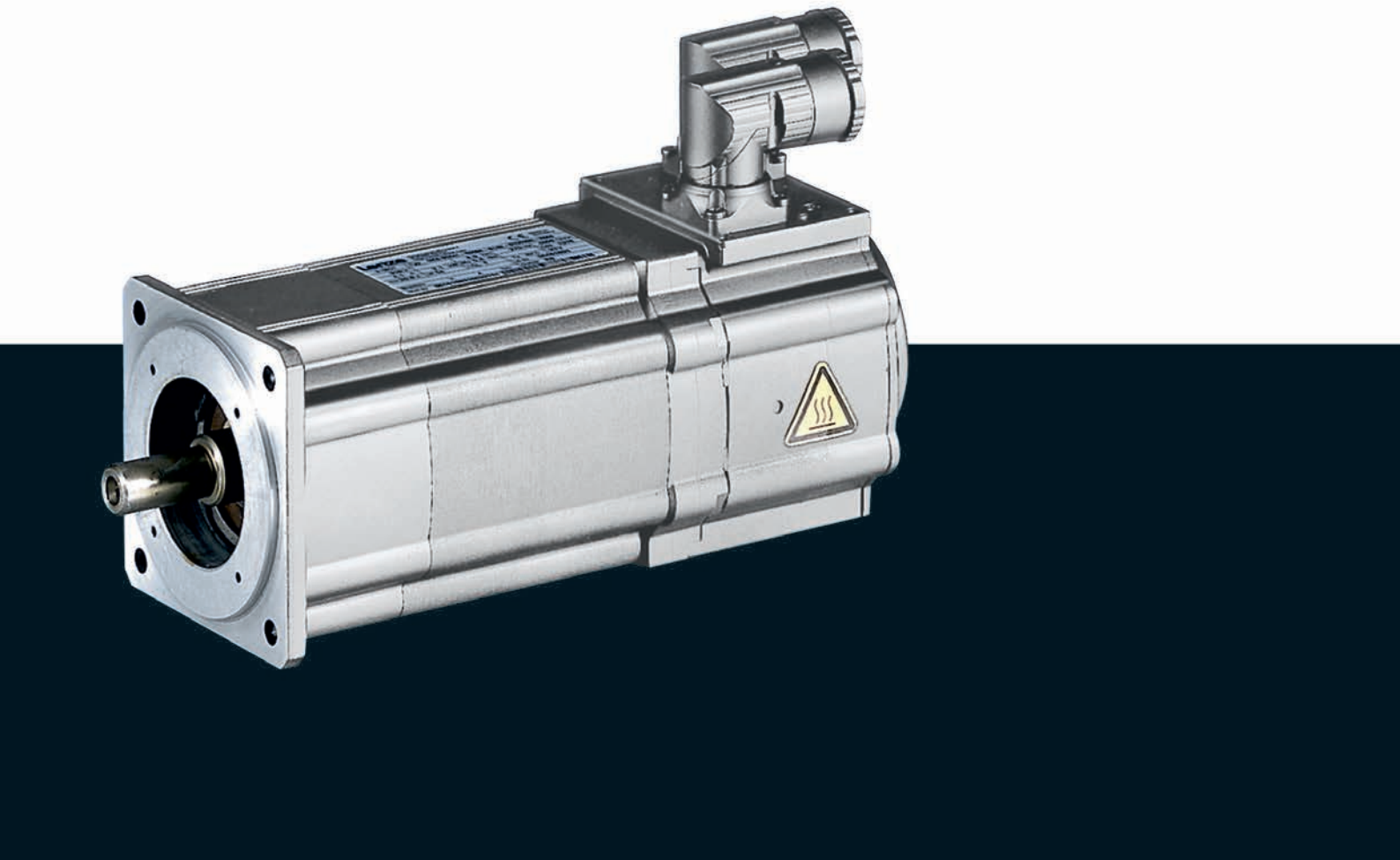

MCS synchronous servo motors

Contents



General information	List of abbreviations	6.11 - 4
	Product key	6.11 - 6
	Product information	6.11 - 8
	Functions and features	6.11 - 9
	Dimensioning	6.11 - 10
Technical data	Standards and operating conditions	6.11 - 17
	Permissible radial and axial forces	6.11 - 18
	Rated data, non-ventilated	6.11 - 19
	Rated data, forced ventilated	6.11 - 24
	Selection tables, Servo Drives 9400 HighLine	6.11 - 26
	Selection tables, Inverter Drives 8400 TopLine	6.11 - 36
	Selection tables, Servo Drives ECS	6.11 - 47
	Selection tables, Servo Inverter 9300	6.11 - 56
	Torque characteristics	6.11 - 63
	Dimensions, self-ventilated	6.11 - 100
	Dimensions, forced ventilated	6.11 - 104
Accessories	Permanent magnet holding brake	6.11 - 107
	Resolver	6.11 - 109
	Incremental encoder and SinCos absolute value encoder	6.11 - 110
	Blowers	6.11 - 112
	Temperature monitoring	6.11 - 113
	Terminal box	6.11 - 114
	ICN connector	6.11 - 116



List of abbreviations

$\eta_{100\,\%}$	[%]	Efficiency
cos φ		Power factor
du/dt	[kV/µs]	Insulation resistance
$F_{ax,-}$	[N]	Min. axial force
$F_{ax,+}$	[N]	Max. axial force
$f_{in,max}$	[Hz]	Max. input frequency
f_{max}	[kHz]	Limit frequency
f_{max}	[kHz]	Max. switching frequency
f_N	[Hz]	Rated frequency
F_{rad}	[N]	Max. radial force
H_{max}	[m]	Site altitude
I_0	[A]	Standstill current
I_{max}	[A]	Max. short-time DC-bus current
I_{max}	[A]	Max. current
I_{max}	[A]	Max. current consumption
I_{max}	[A]	Max. current
I_{max}	[A]	Max. DC-bus current
I_N	[A]	Rated current
J	[kgcm²]	Moment of inertia
J_{MB}	[kgcm²]	Moment of inertia
$KE_{LL\,150\,°C}$	[V /1000 rp]	Voltage constant
$Kt_{0\,150\,°C}$	[Nm/A]	Torque constant
L	[mH]	Mutual inductance
$L_{1\sigma}$	[mH]	Stator leakage inductance
$L_{2\sigma}$	[mH]	Rotor leakage inductance
L_N	[mH]	Rated inductance
m	[kg]	Mass
M_0	[Nm]	Stall torque
$M_{0,\,max}$	[Nm]	Max. standstill torque
M_{av}	[Nm]	Average dynamic torque
M_{max}	[Nm]	Max. torque
M_N	[Nm]	Rated torque
n_{eto}	[r/min]	Transition speed
n_k	[r/min]	Speed
n_{max}	[r/min]	Max. speed

n_N	[r/min]	Rated speed
P_N	[kW]	Rated power
Q_E	[J]	Maximum switching energy
R	[Ω]	Insulation resistance
R	[Ω]	Min. insulation resistance
R_1	[Ω]	Stator impedance
R_2	[Ω]	Charging resistor
R_2	[Ω]	Rotor impedance
$R_{UV\,150\,°C}$	[Ω]	Stator impedance
$R_{UV\,20\,°C}$	[Ω]	Stator impedance
$S_{hü}$	[1/h]	Transition operating frequency
T	[°C]	Operating temperature
T	[°C]	Rated temperature
T	[°C]	Max. ambient temperature of bearing
T	[°C]	Max. surface temperature
T	[°C]	Max. ambient temperature for transport
T	[°C]	Min. ambient storage temperature
T	[°C]	Min. ambient temperature for transport
T	[°C]	Ambient temperature
t_1	[ms]	Engagement time
t_2	[ms]	Disengagement time
$T_{opr,max}$	[°C]	Max. ambient operating temperature
$T_{opr,min}$	[°C]	Min. ambient operating temperature
$U_{in,max}$	[V]	Max. input voltage
$U_{in,min}$	[V]	Min. input voltage
U_{max}	[V]	Max. mains voltage
U_{max}	[V]	Min. input voltage
U_{min}	[V]	Min. mains voltage
$U_{N,\,AC}$	[V]	Rated voltage
$U_{N,\,DC}$	[V]	Rated voltage
Z_{ro}	[Ω]	Rotor impedance
Z_{rs}	[Ω]	Impedance
Z_{so}	[Ω]	Stator impedance



List of abbreviations

CE	Communauté Européenne
CSA	Canadian Standards Association
DIN	Deutsches Institut für Normung e.V.
EMC	Electromagnetic compatibility
EN	European standard
GOST	Certificate for Russian Federation
IEC	International Electrotechnical Commission
IM	International Mounting Code
IP	International Protection Code
NEMA	National Electrical Manufacturers Association
UkrSEPRO	Certificate for Ukraine
UL	Underwriters Laboratory Listed Product
UR	Underwriters Laboratory Recognized Product
VDE	Verband deutscher Elektrotechniker (Association of German Electrical Engineers)



Product key

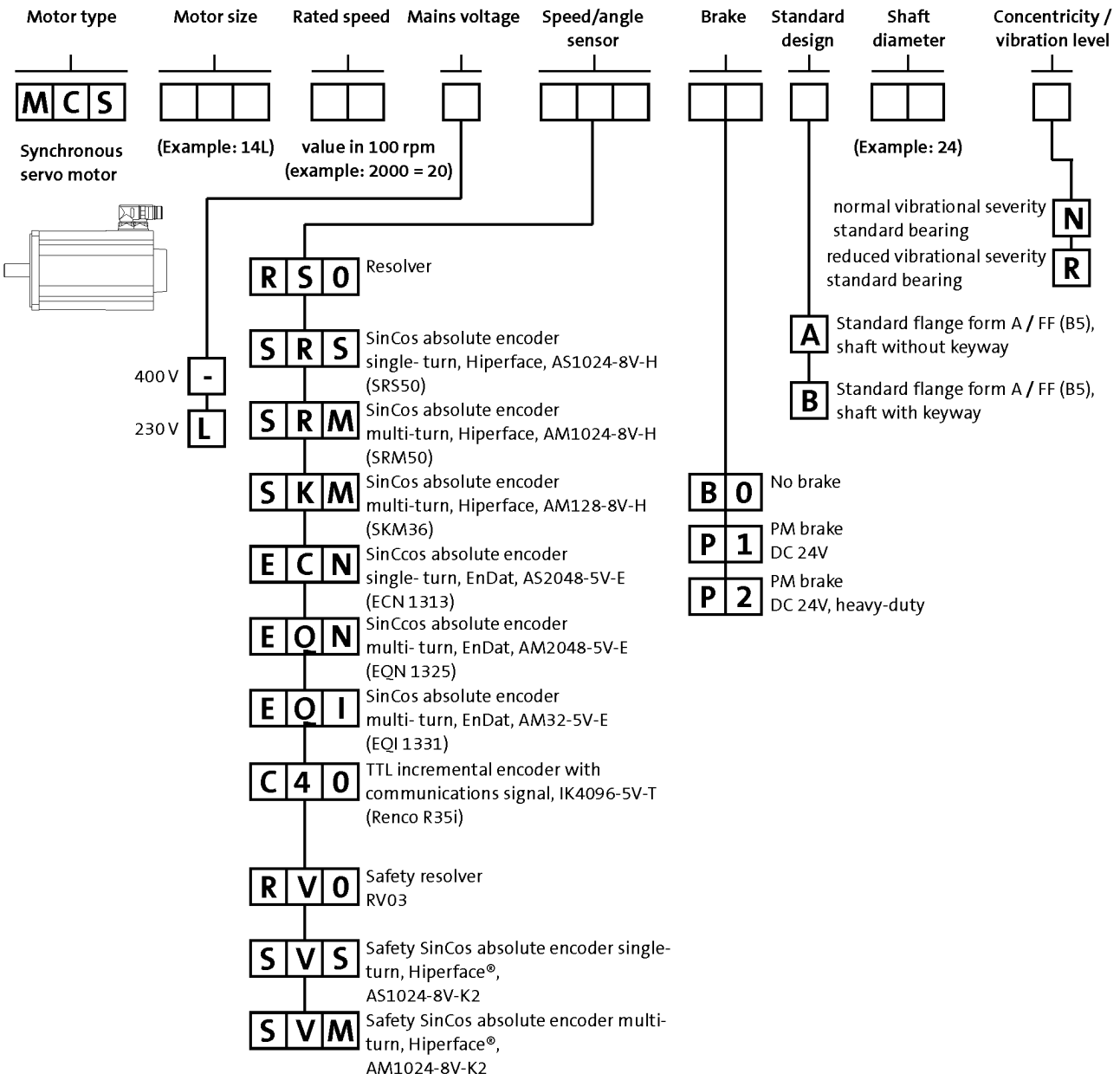
Motor type
Motor size
Rated speed
Mains voltage
Speed/angle sensor
Brake
Standard design
Shaft diameter
Concentricity / vibration level
M C S
Synchronous servo motor
(Example: 14L)
value in 100 rpm (example: 2000 = 20)
(Example: 24)
normal vibrational severity standard bearing
N
reduced vibrational severity standard bearing
R
A
Standard flange form A / FF (B5), shaft without keyway
B
Standard flange form A / FF (B5), shaft with keyway
400 V
-
230 V
L
R S 0
Resolver
S R S
SinCos absolute encoder single- turn, Hiperface, AS1024-8V-H (SRS50)
S R M
SinCos absolute encoder multi-turn, Hiperface, AM1024-8V-H (SRM50)
S K M
SinCos absolute encoder multi-turn, Hiperface, AM128-8V-H (SKM36)
E C N
SinCcos absolute encoder single- turn, EnDat, AS2048-5V-E (ECN 1313)
E Q N
SinCcos absolute encoder multi- turn, EnDat, AM2048-5V-E (EQN 1325)
E Q I
SinCos absolute encoder multi- turn, EnDat, AM32-5V-E (EQI 1331)
C 4 0
TTL incremental encoder with communications signal, IK4096-5V-T (Renco R35i)
R V 0
Safety resolver RV03
S V S
Safety SinCos absolute encoder single-turn, Hiperface®, AS1024-8V-K2
S V M
Safety SinCos absolute encoder multi-turn, Hiperface®, AM1024-8V-K2
B 0
No brake
P 1
PM brake DC 24V
P 2
PM brake DC 24V, heavy-duty



Product key

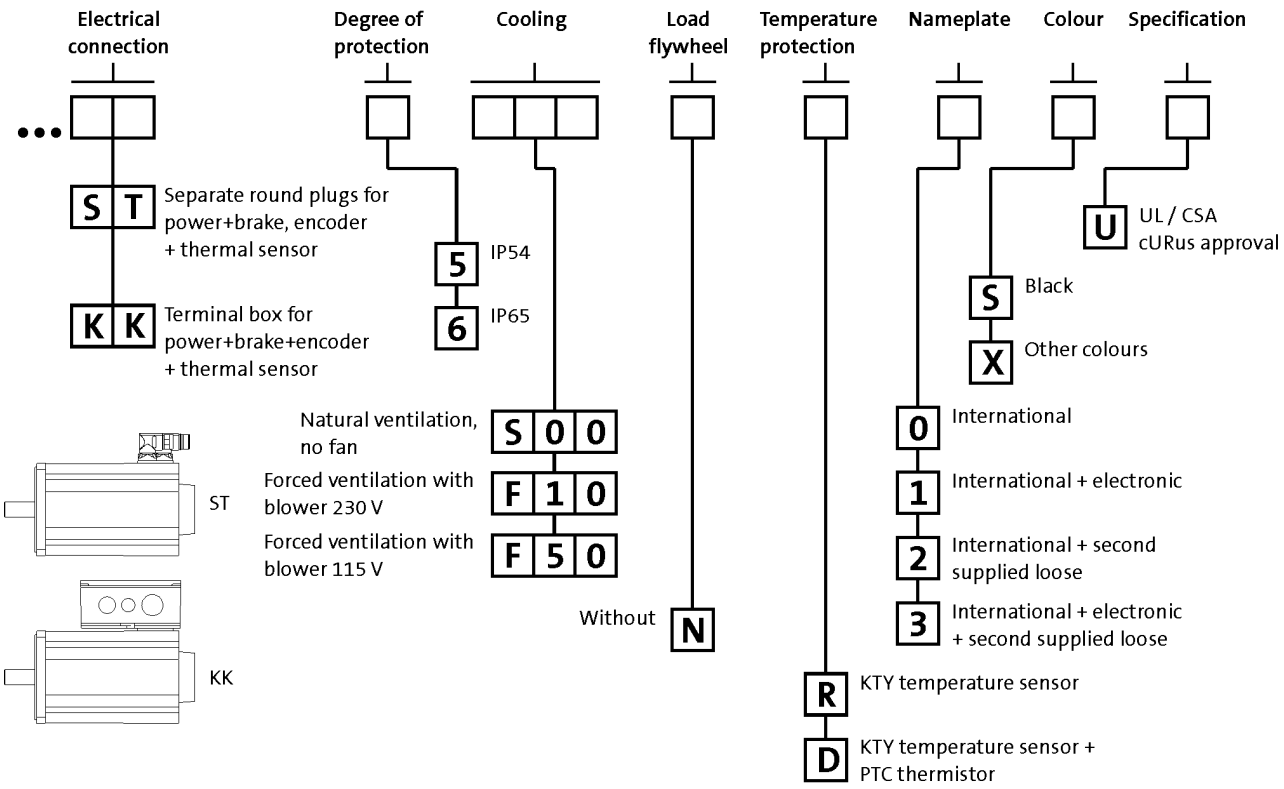
Electrical connection
Degree of protection
Cooling
Load flywheel
Temperature protection
Nameplate
Colour
Specification
S T
Separate round plugs for power+brake, encoder + thermal sensor
K K
Terminal box for power+brake+encoder + thermal sensor
5
IP54
6
IP65
S 0 0
Natural ventilation, no fan
F 1 0
Forced ventilation with blower 230 V
F 5 0
Forced ventilation with blower 115 V
Without
N
ST
KK
U
UL / CSA cURus approval
S
Black
X
Other colours
0
International
1
International + electronic
2
International + second supplied loose
3
International + electronic + second supplied loose
R
KTY temperature sensor
D
KTY temperature sensor + PTC thermistor



Product information

When space is limited, but strict requirements in terms of dynamics and precision still have to be met, the MCS synchronous servo motors are the right choice.

With a power range from 0.25 kW to 15.8 kW and a rated torque range from 0.5 Nm to 72 Nm and peak torques of up to 190 Nm, these motors leave nothing to be desired in installations requiring compact and dynamic drive technology.
The stator winding of the MCS motors employs innovative Single Element Pole Technology – SEPT – and is made up of individual coils. High-quality magnetic materials and specially developed pole shapes set the conditions for their excellent drive characteristics. This results in a significant increase in power density, while at the same time reducing moments of inertia. The minimum detent torques offer exceptional smooth running characteristics and thereby secure excellent control behaviour.

The robust mechanical structure with reinforced bearings, the high degree of protection and the full stator encapsulation increase operational reliability, even in harsh ambient conditions.

Advantages
- High dynamic performance thanks to low moments of inertia
- Compact size with high power density
- Cooling with or without axial external fan
- Robust regenerative resolver system as standard
- Alternatively sin/cos encoder for the highest precision
- Easy to install and service friendly thanks to use of SpeedTec connectors
- Optional terminal box
- Protection: IP54, IP65 optional
- cURus-approved, GOST-certified, CE, RoHS compliant
- Smooth surface
- Single Element Pole Technology
- Optimum rotation characteristics
- Virtually free of detent torque
- Electronic nameplate



MCS09 synchronous servo motor



Functions and features

	MCS06	MCS09	MCS12	MCS14	MCS19
Design					
	B5-FF75	B5-FF100	B5-FF130	B5-FF165	B5-FF215
Shaft end (with and without keyway)					
	11 x 23	14 x 30	19 x 40	24 x 50	28 x 60
A end shield					
	Not oil-tight				
Brake					
Permanent magnetic brake	DC 24 V	DC 24 V 24 V DC, reinforced			
Speed and angle encoder					
	Resolver SinCos single-turn/multi-turn				
Cooling					
Without blower	Naturally ventilated				
Axial blower, 1 phase			230 V; 50 Hz 115 V; 60 Hz		
Thermal sensor					
Thermal detector	KTY				
PTC thermistor		2x PTC additional (3-phase monitoring)			
Motor connection: plug connector					
	Power + brake Encoder + thermal sensor		Power + brake Encoder + thermal sensor Blower		
Motor connection: terminal box					
		Power + brake + encoder + thermal sensor			
Shaft bearings					
Bearing type	Deep-groove ball bearing with high-temperature resistant grease, sealing disc or cover plate				
Position of the locating bearing	Non-drive end				
Colour					
	RAL9005M				

► Terminal boxes not possible if blower is fitted.



Dimensioning

Speed-dependent safety functions

Single encoder concepts with resolvers

Servo motors can perform speed-dependent safety functions for safe speed and / or safe relative position monitoring in a drive system with the Servo Drives 9400. The SM301 safety module, which can be integrated in the Servo Drives 9400, is used to implement these functions. When planning systems/installations of this kind, the following must always be observed:

When using just one single feedback system in the environment of these safety applications, the applicable safety engineering standard IEC 61800-5-2 [Adjustable speed electrical power drive systems - Part: 5-2: Safety requirements - Functional] stipulates special requirements for the connection between feedback system and motor shaft. This is due to the fact that two-channel safety systems at this point in the mechanical system are actually designed as single-channel systems. If this mechanical connection is designed with considerable overdimensioning, the standard permits exclusion of the fault "encoder-shaft breakage" or "encoder-shaft slip".
As such, acceleration limit values must not be exceeded for the individual drive solutions. You can find the limit values in the corresponding feedback data of the individual motor ranges.

Speed-dependent safety functions in connection with the SM301 safety module

For the following speed-dependent safety functions, the motor-feedback system combinations listed in the following table are available:
- Safe stop 1 (SS1)
- Safe operational stop (SOS)
- Safely Limited Speed (SLS)
- Safe Maximum Speed (SMS)
- Safe direction (SDI)
- Operation mode selector (OMS) with confirmation (ES)
- Safe speed monitor (SSM)
- Safely limited increment (SLI).

Encoder type	Encoder type	Product key	Feedback	Safe speed monitoring
			Design	
SinCos absolute value	Single-turn	AS1024-8V-K2		PL d/SIL 2
	Multi-turn	AM1024-8V-K2		
Resolver		RV03		PL e/SIL 3
			2-encoder concept	up to PL e / SIL 3



Dimensioning

Cooling effect of mounting flange

Mounting on a thermally conducting / insulating plate or machine chassis has an influence on heating up the motor, particularly when using naturally ventilated motors.

The motor rating data specified in the catalogue applies when mounting on a steel plate with free convection with the following dimensions:

- MCS06: 270 x 270 mm
- MCS09: 330 x 330 mm
- MCS12 / 14 / 19: 450 x 450 mm

Vibrational severity

		MCS06	MCS09	MCS12	MCS14	MCS19
Vibrational severity						
IEC/EN 60034-14				A		
Maximum r.m.s. value of the vibration velocity [1)]	[mm/s]			1.60		

1) Free suspension

► at n = 600 to 3,600 rpm



Dimensioning

Concentricity and axial run-out of the mounting flanges and smooth running of the shaft ends

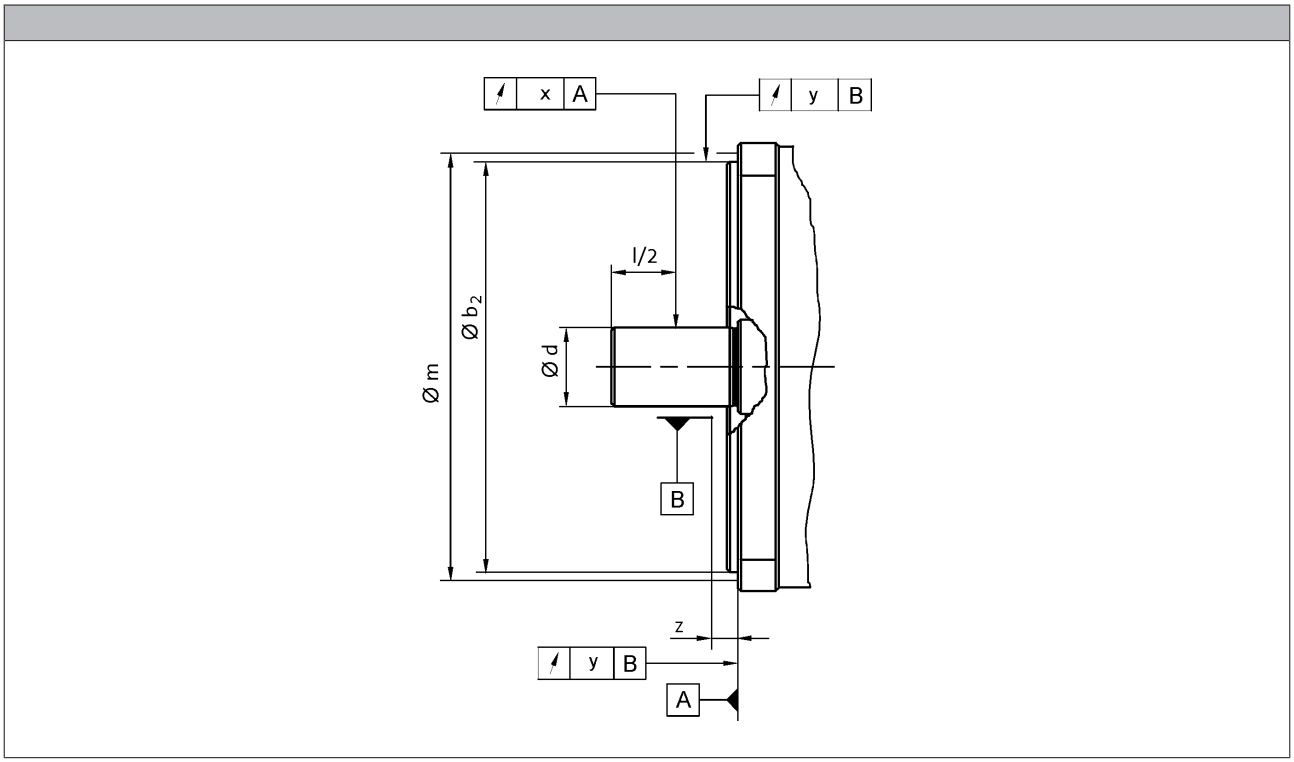

				MCS06	MCS09	MCS12	MCS14	MCS19
Flange size								
				FF75	FF100	FF130	FF165	FF215
Dimensions								
	b_2	j6	[mm]	60	80	110	130	180
	d	k6	[mm]	11	14	19	24	28
Distance								
Measuring diameter	m		[mm]	65.0	85.0	115	135	185
Dial gauge holder for flange check	z	+/- 1	[mm]	10.0				
Concentricity								
IEC 60072				Normal class				
Value	y		[mm]	0.080		0.10		
Linear movement								
IEC 60072				Normal class				
Value	y		[mm]	0.080		0.10		
Smooth running								
IEC 60072				Normal class				
Value	x		[mm]	0.035		0.040		

► Limit values for checking the smooth running of the shaft ends as well as the concentricity and axial run-out of the mounting flange to IEC 60072



Dimensioning

Notes on the selection tables

Graphical display of the operating points

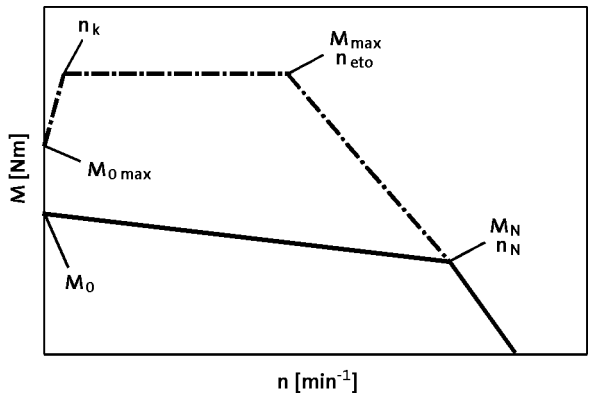

	n_k
	[r/min]
MCS	75.0
MDSKS	100
MDFKS	

Further selection tables with different switching frequencies are available with the following codes:
- DS_ZT_MCS_0001
- DS_ZT_MCA_0001
- DS_ZT_MDSKS_0001
- DS_ZT_MDFKS_0001

Simply enter this code (e.g. DS_ZT_MCS_0001) as a search string at **www.lenze.de/dsc** and you will be given the information immediately in the form of a PDF format.

Please note:
- In case of an active load (e.g. vertical drive axes, hoists, test benches, unwinders), $M_{0\,max}$ has to be considered
- In case of a passive load (e.g. horizontal drive axes), M_{max} can be usually used
- In case of a speed < n_k and inverter-specifically, the achievable torque $M_{0\,max}$ is smaller than M_{max}
- In case of a speed n = 0, the standstill torque M_0 and the standstill current I_0 have to be reduced by 30% after 2 seconds. In case of applications which require a longer holding of M_0, we recommend the drive to be held via the holding brake and reduce the current, e.g. by controller inhibit.
- In case of servo inverters, the switching frequency dependent overload capacity is considered in the default setting. For more information, see the servo inverter catalogue.



Dimensioning

Notes on the torque characteristics

Graph of the torque characteristics

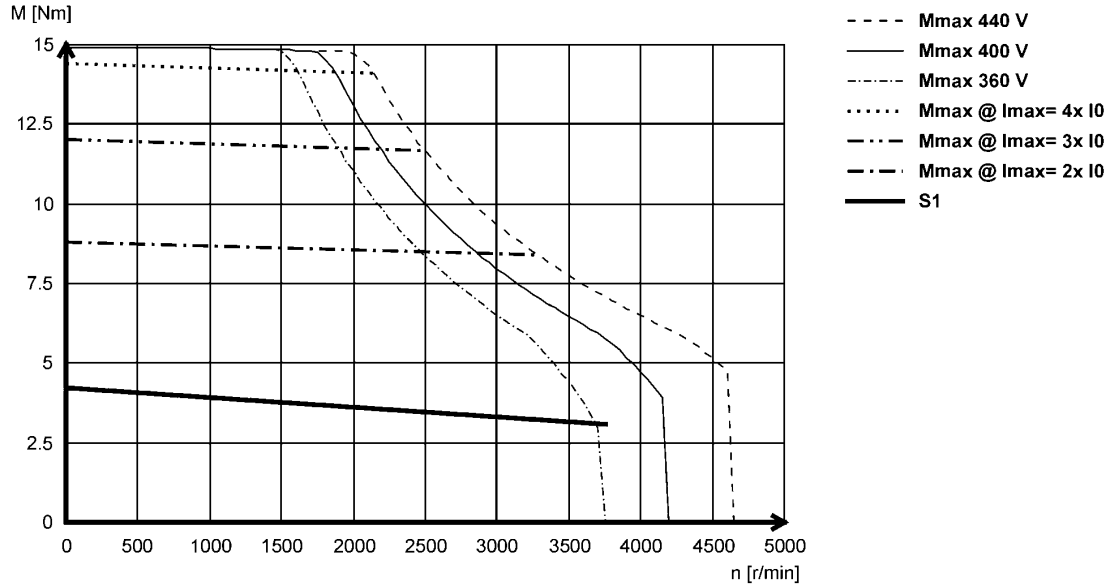

With synchronous servo motors, the limit torque characteristics that result from the selection of servo inverters with maximum currents are also shown alongside the characteristics for continuous operation (S1). These correspond to a multiple of the motor standstill current (2x I0 to 4x I0).

Characteristics in the Internet

You can find the torque characteristic for inverter-motor combinations on the Internet at **www.lenze.de/dsc**. This lists all useful combinations with the servo inverters 9400, 9300, ECS and Inverter Drives 8400 TopLine. These characteristics are each determined using the factory default settings of the inverters:

- 9400 with variables switching frequency.
  This means that up to 6-fold overcurrent can be applied in borderline cases.
- 9300 and ECS with fixed switching frequency.
- 8400 TopLine with variables switching frequency.

The continuous operation characteristics (S1) show the inverter-independent motor rating values

Further information on the terms switching frequency and factory default settings can be found in the operating manual of the respective servo inverter.



Dimensioning

Influence of ambient temperature and site altitude

The information relating to the servo motors in the tables and graphs is valid for a maximum ambient temperature (T_{opr}) of 40 °C and a site altitude (H) up to 1000 m above sea level. The torque correction factor (k_{M1}) shall be applied to the S1 torque characteristic (M_0...M_N) in the event of differing installation conditions.

► The maximum permissible ambient temperature (T_{opr}) for servo motors with blowers is 40 °C

Torque correction factor k_{m1}

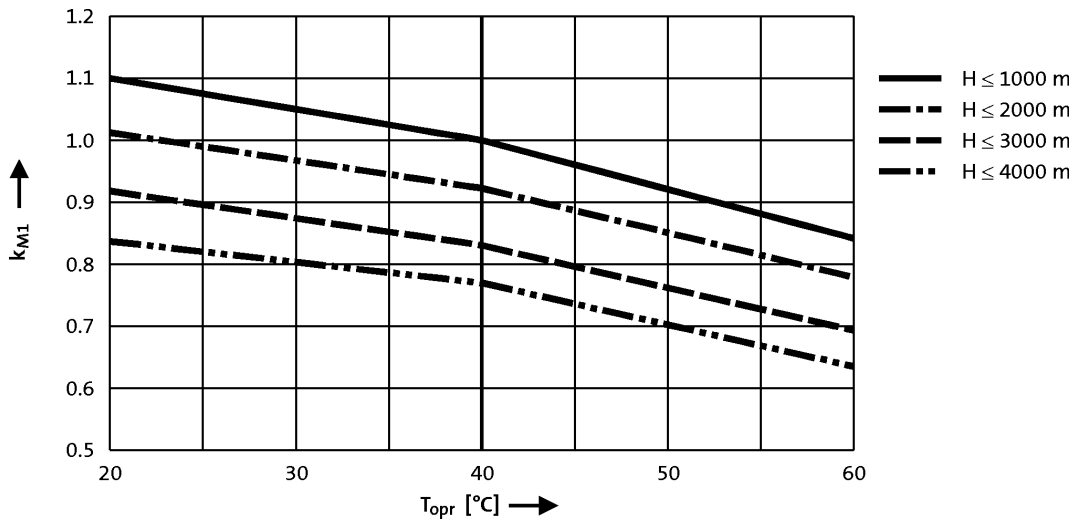





Standards and operating conditions

			MCS	
Cooling type				
			Naturally ventilated	Blower
Enclosure				
EN 60529			IP54 IP65	IP54
Temperature class				
IEC/EN 60034-1; utilisation			F	
IEC/EN 60034-1; insulation system (enamel-insulated wire)			H	
Conformity				
CE			Low-Voltage Directive	
			2006/95/EC	
EAC			TP TC 004/2011 (TR C	
Approval				
			UkrSEPRO	
CSA			CSA 22.2 No. 100	
cURus			UL 1004-1 UL 1004-6 Power Conversion Equipment (File-No. E210321)	
Max. voltage load				
IEC/TS 60034-25			Pulse voltage limiting curve A	
Smooth running				
IEC 60072			Normal class	
Linear movement				
IEC 60072			Normal class	
Concentricity				
IEC 60072			Normal class	
Mechanical ambient conditions (vibration)				
IEC/EN 60721-3-3			3M6	
Min. ambient operating temperature				
Without brake	$T_{opr,min}$	[°C]	-20	-15
With brake	$T_{opr,min}$	[°C]	-10	
Max. ambient temperature for operation				
	$T_{opr,max}$	[°C]	40	
Max. surface temperature				
	T	[°C]	140	110
Mechanical tolerance				
Flange centring diameter			$b_2 \leq 230$ mm = j6 $b_2 > 230$ mm = h6	
Shaft diameter			$d \leq 50$ mm = k6 $d > 50$ mm = m6	
Site altitude				
Amsl	H_{max}	[m]	4000	



Permissible radial and axial forces

Application of forces

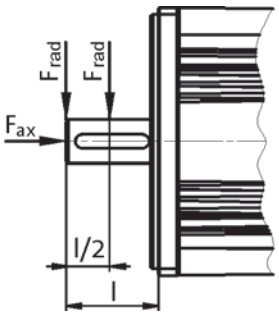

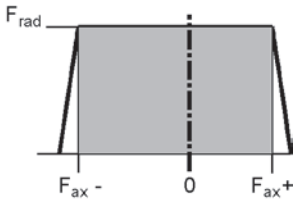

Application of force at l/2

Bearing service life L_{10}															
	5000 h			10000 h			20000 h			30000 h			50000 h		
	F_{rad}	$F_{ax,-}$	$F_{ax,+}$	F_{rad}	$F_{ax,-}$	$F_{ax,+}$	F_{rad}	$F_{ax,-}$	$F_{ax,+}$	F_{rad}	$F_{ax,-}$	$F_{ax,+}$	F_{rad}	$F_{ax,-}$	$F_{ax,+}$
	[N]	[N]	[N]	[N]	[N]	[N]	[N]	[N]	[N]	[N]	[N]	[N]	[N]	[N]	[N]
MCS06	740	-260	140	590	-210	80	470	-170	40	410	-150	30	340	-140	10
MCS09	1040	-700	470	830	-550	310	660	-440	200	580	-380	150	490	-330	90
MCS12	1030	-880	560	820	-690	370	650	-550	230	570	-490	160	480	-420	100
MCS14	1830	-1150	720	1450	-900	470	1150	-720	290	1010	-640	200	850	-550	120
MCS19	3840	-1550	950	3050	-1210	620	2430	-960	360	2120	-840	250	1790	-730	130

Application of force at l

Bearing service life L_{10}															
	5000 h			10000 h			20000 h			30000 h			50000 h		
	F_{rad}	$F_{ax,-}$	$F_{ax,+}$	F_{rad}	$F_{ax,-}$	$F_{ax,+}$	F_{rad}	$F_{ax,-}$	$F_{ax,+}$	F_{rad}	$F_{ax,-}$	$F_{ax,+}$	F_{rad}	$F_{ax,-}$	$F_{ax,+}$
	[N]	[N]	[N]	[N]	[N]	[N]	[N]	[N]	[N]	[N]	[N]	[N]	[N]	[N]	[N]
MCS06	630	-210	90	500	-170	50	400	-140	20	350	-130	0	290	-120	-10
MCS09	900	-630	400	710	-500	260	570	-400	160	500	-350	120	420	-300	70
MCS12	890	-820	490		-640	320	560	-520	190	490	-460	130		-400	
MCS14	1590	-1040	610	1260	-820	390	1000	-660	230	880	-580	150	740	-510	
MCS19	3330	-1320	730	2650	-1040	450	2100	-830	240	1840	-740	140	1550	-640	40

► The values for the bearing service life L_{10} refer to an average speed of 4000 r/min. Depending on the ambient temperatures, the service life of the bearings is also reduced by the grease lifetime.



Rated data, non-ventilated

► The data applies to a mains connection voltage of 3 x 400 V.

	n_N	M_0	M_N	M_{max}	P_N	I_0	I_N	I_{max}	$U_{N, AC}$	f_N
	[r/min]	[Nm]	[Nm]	[Nm]	[kW]	[A]	[A]	[A]	[V]	[Hz]
MCS06C41-	4050	0.80	0.60	2.40	0.25	1.30	1.30	5.40	225	270
MCS06C60-	6000	0.80	0.50	2.40	0.31	2.50	2.40	10.8	135	400
MCS06F41-	4050	1.50	1.20	4.40	0.51	1.50	1.50	5.30	320	270
MCS06F60-	6000	1.50	0.90	4.40	0.57	2.90	2.50	10.5	180	400
MCS06I41-	4050	2.00	1.50	6.20	0.64	1.70	1.60	5.90	325	270
MCS06I60-	6000	2.00	1.20	6.20	0.75	3.40	2.90	11.8	190	400
MCS09D41-	4050	3.30	2.30	9.50	1.00	2.60	2.30	10.0	320	270
MCS09D60-	6000	3.30	1.80	9.50	1.10	5.30	3.80	20.0	210	400
MCS09F38-	3750	4.20	3.10	15.0	1.20	3.00	2.50	15.0	330	250
MCS09F60-	6000	4.20	2.40	15.0	1.50	6.00	4.50	30.0	230	400
MCS09H41-	4050	5.50	3.80	20.0	1.60	4.30	3.40	20.0	300	270
MCS09H60-	6000	5.50	3.00	20.0	1.90	8.50	6.00	40.0	190	400
MCS09L41-	4050	7.50	4.50	32.0	1.90	6.20	4.20	32.0	295	270
MCS09L51-	5100	7.50	3.60	32.0	1.90	12.4	6.90	64.0	180	340

	$\eta_{100\,\%}$	J [1]	$KE_{LL\,150\,°C}$	$R_{UV\,20\,°C}$	$R_{UV\,150\,°C}$	L_N	$Kt_{0\,150\,°C}$	n_{max} [2]	m [1]
	[%]	[kgcm²]	[V /1000 rp]	[Ω]	[Ω]	[mH]	[Nm/A]	[r/min]	[kg]
MCS06C41-	65.0	0.14	36.6	27.1	36.5	51.0	0.66	8000	1.80
MCS06C60-	70.0	0.14	18.3	6.80	9.10	12.8	0.33	8000	1.80
MCS06F41-	77.0	0.22	60.1	21.9	29.5	63.5	1.05	8000	2.20
MCS06F60-	81.0	0.22	30.0	5.50	7.40	15.9	0.53	8000	2.20
MCS06I41-	81.0	0.30	73.4	18.8	25.4	60.2	1.21	8000	2.90
MCS06I60-	84.0	0.30	36.7	4.70	6.30	15.1	0.60	8000	2.90
MCS09D41-	87.0	1.10	71.2	7.00	9.40	25.1	1.25	7000	4.30
MCS09D60-	87.0	1.10	35.6	1.80	2.40	6.30	0.62	7000	4.30
MCS09F38-	91.0	1.50	79.8	5.20	7.00	24.6	1.40	7000	5.20
MCS09F60-	91.0	1.50	39.9	1.30	1.80	6.20	0.70	7000	5.20
MCS09H41-	91.0	1.90	75.7	3.20	4.30	16.1	1.29	7000	6.10
MCS09H60-	91.0	1.90	37.8	0.80	1.10	4.00	0.65	7000	6.10
MCS09L41-	91.0	2.80	71.7	1.80	2.40	9.90	1.21	7000	7.90
MCS09L51-	91.0	2.80	35.9	0.44	0.59	2.50	0.60	7000	7.90

[1] Without brake.
[2] Mechanically permissible maximum speed.



Rated data, non-ventilated

► The data applies to a mains connection voltage of 3 x 400 V.

	n_N	M_0	M_N	M_{max}	P_N	I_0	I_N	I_{max}	$U_{N, AC}$	f_N
	[r/min]	[Nm]	[Nm]	[Nm]	[kW]	[A]	[A]	[A]	[V]	[Hz]
MCS12D20-	1950	6.40	5.50	18.0	1.10	2.70	2.60	10.0	345	130
MCS12D41-	4050	6.40	4.30	18.0	1.80	5.50	4.50	20.0	310	270
MCS12H15-	1500	11.4	10.0	29.0	1.60	4.10	3.80	12.0	300	100
MCS12H35-	3525	11.4	7.50	29.0	2.80	8.20	5.70	24.0	325	235
MCS12L20-	1950	15.0	13.5	56.0	2.80	6.20	5.90	28.0	330	130
MCS12L41-	4050	15.0	11.0	56.0	4.70	12.4	10.2	57.0	300	270
MCS14D15-	1500	11.0	9.20	29.0	1.45	5.00	4.50	17.0	305	100
MCS14D36-	3600	11.0	7.50	29.0	2.80	10.0	7.50	33.0	295	240
MCS14H15-	1500	21.0	16.0	55.0	2.50	8.50	6.60	26.0	325	100
MCS14H32-	3225	21.0	14.0	55.0	4.70	16.9	11.9	52.0	295	215
MCS14L15-	1500	28.0	23.0	77.0	3.60	12.0	9.70	37.0	315	100
MCS14L32-	3225	28.0	17.2	77.0	5.80	24.0	15.0	75.0	275	215
MCS14P14-	1350	37.0	30.0	105	4.20	12.2	10.8	46.0	340	90
MCS14P32-	3225	37.0	21.0	105	7.10	24.3	15.6	92.0	315	215

	$\eta_{100\,\%}$	J [1]	$KE_{LL\,150\,°C}$	$R_{UV\,20\,°C}$	$R_{UV\,150\,°C}$	L_N	$Kt_{0\,150\,°C}$	n_{max} [2]	m [1]
	[%]	[kgcm²]	[V /1000 rp]	[Ω]	[Ω]	[mH]	[Nm/A]	[r/min]	[kg]
MCS12D20-	79.0	4.00	137	8.70	11.8	52.2	2.34	6000	6.40
MCS12D41-	84.0	4.00	68.6	2.20	2.90	13.0	1.17	6000	6.40
MCS12H15-	88.0	7.30	173	5.70	7.70	42.1	2.79	6000	9.50
MCS12H35-	91.0	7.30	86.5	1.40	1.90	10.5	1.40	6000	9.50
MCS12L20-	90.0	10.6	149	2.20	3.00	21.8	2.42	6000	12.6
MCS12L41-	91.0	10.6	74.6	0.55	0.75	5.50	1.21	6000	12.6
MCS14D15-	88.0	8.10	129	4.00	5.40	49.8	2.19	6000	10.7
MCS14D36-	92.0	8.10	64.2	1.00	1.35	12.5	1.09	6000	10.7
MCS14H15-	92.0	14.2	153	2.08	2.81	34.1	2.48	6000	15.5
MCS14H32-	93.0	14.2	76.3	0.52	0.70	8.50	1.24	6000	15.5
MCS14L15-	90.0	23.4	152	1.21	1.64	22.0	2.33	6000	20.1
MCS14L32-	93.0	23.4	76.2	0.30	0.41	5.50	1.16	6000	20.1
MCS14P14-	90.0	34.7	179	1.10	1.49	23.9	3.04	6000	24.9
MCS14P32-	93.0	34.7	89.4	0.28	0.37	6.00	1.52	6000	24.9

[1] Without brake.
[2] Mechanically permissible maximum speed.



Rated data, non-ventilated

► The data applies to a mains connection voltage of 3 x 400 V.

	n_N	M_0	M_N	M_{max}	P_N	I_0	I_N	I_{max}	$U_{N, AC}$	f_N
	[r/min]	[Nm]	[Nm]	[Nm]	[kW]	[A]	[A]	[A]	[V]	[Hz]
MCS19F14-	1425	32.0	27.0	86.0	4.00	9.90	8.60	31.0	335	95
MCS19F30-	3000	32.0	21.0	86.0	6.60	19.8	14.0	63.0	300	200
MCS19J14-	1425	51.0	40.0	129	6.00	15.2	12.3	45.0	330	95
MCS19J30-	3000	51.0	29.0	129	9.10	30.5	18.5	90.0	300	200
MCS19P14-	1350	64.0	51.0	190	7.20	17.5	14.3	60.0	330	90
MCS19P30-	3000	64.0	32.0	190	10.0	34.9	19.0	120	320	200

	$\eta_{100\,\%}$	J [1]	$KE_{LL\,150\,°C}$	$R_{UV\,20\,°C}$	$R_{UV\,150\,°C}$	L_N	$Kt_{0\,150\,°C}$	n_{max} [2]	m [1]
	[%]	[kgcm²]	[V /1000 rp]	[Ω]	[Ω]	[mH]	[Nm/A]	[r/min]	[kg]
MCS19F14-	92.0	65.0	195	1.30	1.75	20.8	3.23	4000	23.0
MCS19F30-	93.0	65.0	97.2	0.32	0.44	5.20	1.62	4000	23.0
MCS19J14-	92.0	105	199	0.65	0.88	12.8	3.31	4000	30.0
MCS19J30-	93.0	105	99.5	0.16	0.22	3.20	1.65	4000	30.0
MCS19P14-	92.0	160	216	0.54	0.73	9.60	3.66	4000	40.0
MCS19P30-	93.0	160	108	0.14	0.18	2.40	1.83	4000	40.0

[1] Without brake.
[2] Mechanically permissible maximum speed.



Rated data, non-ventilated

► The data applies to a mains connection voltage of 3 x 230 V.

	n_N	M_0	M_N	M_{max}	P_N	I_0	I_N	I_{max}	$U_{N, AC}$	f_N
	[r/min]	[Nm]	[Nm]	[Nm]	[kW]	[A]	[A]	[A]	[V]	[Hz]
MCS06C41L	4050	0.80	0.60	2.40	0.25	2.50	2.50	10.8	125	270
MCS06C60L	6000	0.80	0.50	2.40	0.31	4.30	4.00	18.5	85	400
MCS06F41L	4050	1.50	1.20	4.40	0.51	2.90	2.90	10.5	165	270
MCS06F60L	6000	1.50	0.90	4.40	0.57	3.80	3.40	16.5	125	400
MCS06I41L	4050	2.00	1.50	6.20	0.64	3.10	2.90	11.8	175	270
MCS06I60L	6000	2.00	1.20	6.20	0.75	4.20	3.60	16.0	150	400
MCS09D41L	4050	3.30	2.30	9.50	1.00	5.30	4.60	20.0	165	270
MCS09D60L	6000	3.30	1.80	9.50	1.10	10.3	7.00	39.0	110	400
MCS09F38L	3750	4.20	3.10	15.0	1.20	6.00	5.00	30.0	160	250
MCS09F60L	6000	4.20	2.40	15.0	1.50	10.5	7.90	53.0	125	400
MCS09H41L	4050	5.50	3.80	20.0	1.60	8.50	6.80	40.0	160	270
MCS09H60L	6000	5.50	3.00	20.0	1.90	12.0	8.00	57.0	145	400
MCS09L41L	4050	7.50	4.50	32.0	1.90	12.4	8.40	64.0	145	270

	$\eta_{100\,\%}$	J [1]	$KE_{LL\,150\,°C}$	$R_{UV\,20\,°C}$	$R_{UV\,150\,°C}$	L_N	$Kt_{0\,150\,°C}$	n_{max} [2]	m [1]
	[%]	[kgcm²]	[V /1000 rp]	[Ω]	[Ω]	[mH]	[Nm/A]	[r/min]	[kg]
MCS06C41L	65.0	0.14	21.5	6.00	8.00	12.8	0.33	8000	1.80
MCS06C60L	70.0	0.14	12.5	2.20	2.90	4.30	0.19	8000	1.80
MCS06F41L	81.0	0.22	34.5	5.50	7.40	15.9	0.62	8000	2.20
MCS06F60L	82.0	0.22	22.2	2.30	3.00	6.90	0.40	8000	2.20
MCS06I41L	81.0	0.30	38.0	4.70	6.20	15.1	0.64	8000	2.90
MCS06I60L	84.0	0.30	28.5	2.50	3.40	9.30	0.48	8000	2.90
MCS09D41L	87.0	1.10	35.6	1.80	2.40	6.30	0.62	7000	4.30
MCS09D60L	87.0	1.10	18.3	0.45	0.61	1.70	0.32	7000	4.30
MCS09F38L	90.0	1.50	39.9	1.30	1.80	6.20	0.70	7000	5.20
MCS09F60L	91.0	1.50	22.8	0.42	0.56	2.00	0.40	7000	5.20
MCS09H41L	91.0	1.90	37.8	0.80	1.10	4.00	0.65	7000	6.10
MCS09H60L	91.0	1.90	26.6	0.36	0.48	2.00	0.46	7000	6.10
MCS09L41L	91.0	2.80	35.9	0.44	0.59	2.50	0.60	7000	7.90

[1] Without brake.
[2] Mechanically permissible maximum speed.



Rated data, non-ventilated

► The data applies to a mains connection voltage of 3 x 230 V.

	n_N	M_0	M_N	M_{max}	P_N	I_0	I_N	I_{max}	$U_{N, AC}$	f_N
	[r/min]	[Nm]	[Nm]	[Nm]	[kW]	[A]	[A]	[A]	[V]	[Hz]
MCS12D20L	1950	6.40	5.50	18.0	1.10	5.50	5.20	20.0	175	130
MCS12D41L	4050	6.40	4.30	18.0	1.80	10.7	8.80	40.0	155	270
MCS12H15L	1500	11.4	10.0	29.0	1.60	8.20	7.80	24.0	158	100
MCS12H30L	3000	11.4	8.00	29.0	2.50	13.5	10.5	39.0	165	200
MCS12L20L	1950	15.0	13.5	56.0	2.80	12.4	11.8	57.0	165	130

	$\eta_{100\,\%}$	J [1]	$KE_{LL\,150\,°C}$	$R_{UV\,20\,°C}$	$R_{UV\,150\,°C}$	L_N	$Kt_{0\,150\,°C}$	n_{max} [2]	m [1]
	[%]	[kgcm²]	[V /1000 rp]	[Ω]	[Ω]	[mH]	[Nm/A]	[r/min]	[kg]
MCS12D20L	79.0	4.00	68.6	2.20	2.90	13.0	1.17	6000	6.40
MCS12D41L	84.0	4.00	35.0	0.55	0.75	3.40	0.60	6000	6.40
MCS12H15L	82.0	7.30	86.5	1.41	1.90	10.5	1.40	6000	9.50
MCS12H30L	87.0	7.30	53.0	0.50	0.67	4.00	0.86	6000	9.50
MCS12L20L	90.0	10.6	76.9	0.55	0.75	5.50	1.21	6000	12.6

[1] Without brake.
[2] Mechanically permissible maximum speed.



Rated data, forced ventilated

► The data applies to a mains connection voltage of 3 x 400 V.

	n_N	M_0	M_N	M_{max}	P_N	I_0	I_N	I_{max}	$U_{N, AC}$	f_N
	[r/min]	[Nm]	[Nm]	[Nm]	[kW]	[A]	[A]	[A]	[V]	[Hz]
MCS12D17-	1650	7.50	7.00	17.7	1.20	3.20	3.00	10.0	330	110
MCS12D35-	3525	7.50	6.00	17.7	2.20	6.40	5.60	20.0	300	235
MCS12H14-	1350	12.8	12.0	29.0	1.70	4.30	4.10	12.0	310	90
MCS12H34-	3375	12.8	10.5	29.0	3.70	8.50	7.50	24.0	320	225
MCS12L17-	1650	19.0	17.0	56.4	2.90	7.20	6.70	28.0	300	110
MCS12L39-	3900	19.0	14.0	56.4	5.70	14.4	11.7	57.0	295	260
MCS14D14-	1350	12.5	12.0	29.0	1.70	5.70	5.40	17.0	345	90
MCS14D30-	3000	12.5	10.5	29.0	3.30	11.4	9.70	33.0	325	200
MCS14H12-	1200	25.5	23.5	54.8	3.00	9.30	8.30	26.0	335	80
MCS14H28-	2775	25.5	20.5	54.8	6.00	18.4	15.0	52.0	325	185
MCS14L14-	1350	34.5	30.5	77.1	4.30	13.4	11.8	37.0	335	90
MCS14L30-	3000	34.5	25.5	77.1	8.00	26.7	20.8	75.0	310	200
MCS14P11-	1050	43.5	42.0	105	4.60	14.1	13.4	46.0	330	70
MCS14P26-	2625	43.5	33.0	105	9.10	28.3	21.9	92.0	325	175

	$\eta_{100\,\%}$	J [1]	$KE_{LL\,150\,°C}$	$R_{UV\,20\,°C}$	$R_{UV\,150\,°C}$	L_N	$Kt_{0\,150\,°C}$	n_{max} [2]	m [1]
	[%]	[kgcm²]	[V /1000 rp]	[Ω]	[Ω]	[mH]	[Nm/A]	[r/min]	[kg]
MCS12D17-	75.0	4.00	137	8.72	11.8	52.2	2.34	6000	8.50
MCS12D35-	82.0	4.00	68.6	2.18	2.94	13.0	1.17	6000	8.50
MCS12H14-	80.0	7.30	173	5.72	7.72	42.1	2.98	6000	11.6
MCS12H34-	86.0	7.30	86.5	1.39	1.88	10.5	1.51	6000	11.6
MCS12L17-	90.0	10.6	149	2.22	2.99	21.8	2.64	6000	14.7
MCS12L39-	94.0	10.6	74.6	0.55	0.75	5.50	1.32	6000	14.7
MCS14D14-	84.0	8.10	129	4.00	5.40	49.8	2.19	6000	14.5
MCS14D30-	92.0	8.10	64.2	1.00	1.35	12.5	1.09	6000	14.5
MCS14H12-	87.0	14.2	153	2.08	2.81	34.1	2.75	6000	19.5
MCS14H28-	93.0	14.2	76.3	0.52	0.70	8.50	1.39	6000	19.5
MCS14L14-	88.0	23.4	152	1.21	1.64	22.0	2.57	6000	24.0
MCS14L30-	92.0	23.4	76.2	0.30	0.41	5.50	1.29	6000	24.0
MCS14P11-	86.0	34.7	179	1.10	1.49	23.9	3.08	6000	29.0
MCS14P26-	92.0	34.7	89.4	0.28	0.37	6.00	1.54	6000	29.0

[1] Without brake.
[2] Mechanically permissible maximum speed.



Rated data, forced ventilated

► The data applies to a mains connection voltage of 3 x 400 V.

	n_N	M_0	M_N	M_{max}	P_N	I_0	I_N	I_{max}	$U_{N, AC}$	f_N
	[r/min]	[Nm]	[Nm]	[Nm]	[kW]	[A]	[A]	[A]	[V]	[Hz]
MCS19F12-	1200	41.5	38.0	86.0	4.80	12.2	11.3	31.0	320	80
MCS19F29-	2850	41.5	32.5	86.0	9.70	24.5	20.1	63.0	320	190
MCS19J12-	1200	70.5	62.5	129	7.90	20.3	18.3	45.0	320	80
MCS19J29-	2850	70.5	50.5	129	15.1	40.6	31.0	90.0	315	190
MCS19P12-	1200	86.0	72.0	190	9.00	22.4	21.3	60.0	310	80
MCS19P29-	2850	86.0	53.0	190	15.8	44.7	29.5	120	315	190

	$\eta_{100\,\%}$	J [1]	$KE_{LL\,150\,°C}$	$R_{UV\,20\,°C}$	$R_{UV\,150\,°C}$	L_N	$Kt_{0\,150\,°C}$	n_{max} [2]	m [1]
	[%]	[kgcm²]	[V /1000 rp]	[Ω]	[Ω]	[mH]	[Nm/A]	[r/min]	[kg]
MCS19F12-	90.4	65.0	195	1.30	1.75	20.8	3.40	4000	29.0
MCS19F29-	94.7	65.0	97.2	0.32	0.44	5.20	1.69	4000	29.0
MCS19J12-	89.3	105	199	0.65	0.88	12.8	3.47	4000	36.0
MCS19J29-	92.8	105	99.5	0.16	0.22	3.20	1.74	4000	36.0
MCS19P12-	90.3	160	216	0.54	0.73	9.60	3.84	4000	46.0
MCS19P29-	93.4	160	108	0.14	0.18	2.40	1.92	4000	46.0

[1] Without brake.
[2] Mechanically permissible maximum speed.



Selection tables, Servo Drives 9400 HighLine

Non-ventilated motors

► The data applies to a mains connection voltage of 3 x 400 V and an inverter switching frequency of 4 kHz.

					E94A□□	E0024	E0034	E0044	E0074	E0094	E0134	E0174	E0244	E0324	E0474	E0594
					I_N	1.9	3.1	5.0	8.8	11.7	16.3	20.6	29.4	38.4	47.0	59.0
					$I_{0,max}$	6.0	10.0	16.0	21.0	28.0	39.0	49.5	58.8	76.8	94.0	118.0
MCS	M_N	n_N	I_N	P_N	I_{max}	6.0	10.0	16.0	21.0	28.0	39.0	49.5	58.8	76.8	94.0	118.0
06C41-	0.6	4050	1.3	0.25	M_0	0.8										
					M_N	0.6										
					$M_{0,max}$	2.4										
					M_{max}	2.4										
					n_{eto}	-										
06C60-	0.5	6000	2.4	0.31	M_0	0.6	0.8									
					M_N	0.4	0.5									
					$M_{0,max}$	1.5	2.3									
					M_{max}	1.5	2.3									
					n_{eto}	-	-									
06F41-	1.2	4050	1.5	0.51	M_0	1.5										
					M_N	1.2										
					$M_{0,max}$	4.4										
					M_{max}	4.4										
					n_{eto}	-										
06F60-	0.9	6000	2.5	0.57	M_0	1.0	1.5									
					M_N	0.7	0.9									
					$M_{0,max}$	3.0	4.3									
					M_{max}	3.0	4.3									
					n_{eto}	-	-									
06I41-	1.5	4050	1.6	0.64	M_0	2.0										
					M_N	1.5										
					$M_{0,max}$	6.2										
					M_{max}	6.2										
					n_{eto}	-										
06I60-	1.2	6000	2.9	0.75	M_0	1.1	1.8	2.0								
					M_N	0.8	1.2	1.2								
					$M_{0,max}$	3.3	5.5	6.2								
					M_{max}	3.3	5.5	6.2								
					n_{eto}	-	-	-								
09D41-	2.3	4050	2.3	1.00	M_0	2.4	3.3									
					M_N	1.9	2.3									
					$M_{0,max}$	6.3	9.5									
					M_{max}	6.3	9.5									
					n_{eto}	-	-									
09D60-	1.8	6000	3.8	1.10	M_0			3.1	3.3							
					M_N			1.8	1.8							
					$M_{0,max}$			8.0	9.5							
					M_{max}			8.0	9.5							
					n_{eto}			-	-							
09F38-	3.1	3750	2.5	1.20	M_0		4.2	4.2								
					M_N		3.1	3.1								
					$M_{0,max}$		11.6	14.9								
					M_{max}		11.6	14.9								
					n_{eto}		-	-								

► I... [A], M... [Nm], n... [r/min], P... [kW]



Selection tables, Servo Drives 9400 HighLine

Non-ventilated motors

► The data applies to a mains connection voltage of 3 x 400 V and an inverter switching frequency of 4 kHz.

					E94A□□	E0024	E0034	E0044	E0074	E0094	E0134	E0174	E0244	E0324	E0474	E0594
					I_N	1.9	3.1	5.0	8.8	11.7	16.3	20.6	29.4	38.4	47.0	59.0
					$I_{0,max}$	6.0	10.0	16.0	21.0	28.0	39.0	49.5	58.8	76.8	94.0	118.0
MCS	**M_N**	**n_N**	**I_N**	**P_N**	I_{max}	6.0	10.0	16.0	21.0	28.0	39.0	49.5	58.8	76.8	94.0	118.0
09F60-	2.4	6000	4.5	1.50	M_0			3.5	4.2	4.2	4.2					
					M_N			2.4	2.4	2.4	2.4					
					$M_{0,max}$			9.8	12.0	14.4	14.9					
					M_{max}			9.8	12.0	14.4	14.9					
					n_{eto}			-	-	-	-					
09H41-	3.8	4050	3.4	1.60	M_0		4.0	5.5	5.5							
					M_N		3.5	3.8	3.8							
					$M_{0,max}$		12.0	17.5	20.4							
					M_{max}		12.0	17.5	20.4							
					n_{eto}		-	-	-							
09H60-	3.0	6000	6.0	1.90	M_0				5.5	5.5	5.5	5.5				
					M_N				3.0	3.0	3.0	3.0				
					$M_{0,max}$				12.5	15.8	20.1	20.4				
					M_{max}				12.5	15.8	20.1	20.4				
					n_{eto}				-	-	-	-				
09L41-	4.5	4050	4.2	1.90	M_0			6.0	7.5	7.5						
					M_N			4.5	4.5	4.5						
					$M_{0,max}$			17.4	22.2	28.5						
					M_{max}			17.4	22.2	28.5						
					n_{eto}			-	-	-						
09L51-	3.6	5100	6.9	1.90	M_0				5.3	7.0	7.5	7.5	7.5			
					M_N				3.6	3.6	3.6	3.6	3.6			
					$M_{0,max}$				11.9	15.5	20.9	25.8	29.7			
					M_{max}				11.9	15.5	20.9	25.8	29.7			
					n_{eto}				-	-	-	-	-			
12D20-	5.5	1950	2.6	1.10	M_0	4.4	6.4									
					M_N	4.0	5.5									
					$M_{0,max}$	11.8	17.7									
					M_{max}	11.8	17.7									
					n_{eto}	-	-									
12D41-	4.3	4050	4.5	1.80	M_0			5.9	6.4							
					M_N			4.3	4.3							
					$M_{0,max}$			14.7	17.7							
					M_{max}			14.7	17.7							
					n_{eto}			-	-							
12H15-	10.0	1500	3.8	1.60	M_0		8.7	11.4								
					M_N		8.2	10.0								
					$M_{0,max}$		24.6	29.0								
					M_{max}		24.6	29.0								
					n_{eto}		-	-								
12H35-	7.5	3525	5.7	2.80	M_0			7.0	11.4	11.4	11.4					
					M_N			6.6	7.5	7.5	7.5					
					$M_{0,max}$			20.1	25.8	29.0	29.0					
					M_{max}			20.1	25.8	29.0	29.0					
					n_{eto}			-	-	-	-					

► I... [A], M... [Nm], n... [r/min], P... [kW]



Selection tables, Servo Drives 9400 HighLine

Non-ventilated motors

► The data applies to a mains connection voltage of 3 x 400 V and an inverter switching frequency of 4 kHz.

					E94A□□	E0024	E0034	E0044	E0074	E0094	E0134	E0174	E0244	E0324	E0474	E0594
					I_N	1.9	3.1	5.0	8.8	11.7	16.3	20.6	29.4	38.4	47.0	59.0
					$I_{0,max}$	6.0	10.0	16.0	21.0	28.0	39.0	49.5	58.8	76.8	94.0	118.0
MCS	**M_N**	**n_N**	**I_N**	**P_N**	I_{max}	6.0	10.0	16.0	21.0	28.0	39.0	49.5	58.8	76.8	94.0	118.0
12L20-	13.5	1950	5.9	2.80	M_0			12.1	15.0	15.0	15.0					
					M_N			11.4	13.5	13.5	13.5					
					$M_{0,max}$			35.5	44.6	55.7	56.4					
					M_{max}			35.5	44.6	55.7	56.4					
					n_{eto}			-	-	-	-					
12L41-	11.0	4050	10.2	4.70	M_0				10.6	14.0	15.0	15.0	15.0			
					M_N				9.5	11.0	11.0	11.0	11.0			
					$M_{0,max}$				24.4	31.6	41.9	50.8	56.4			
					M_{max}				24.4	31.6	41.9	50.8	56.4			
					n_{eto}				-	-	-	-	-			
14D15-	9.2	1500	4.5	1.45	M_0			11.0	11.0							
					M_N			9.2	9.2							
					$M_{0,max}$			28.3	29.0							
					M_{max}			28.3	29.0							
					n_{eto}			-	-							
14D36-	7.5	3600	7.5	2.80	M_0				9.6	11.0	11.0					
					M_N				7.5	7.5	7.5					
					$M_{0,max}$				20.2	25.6	29.0					
					M_{max}				20.2	25.6	29.0					
					n_{eto}				-	-	-					
14H15-	16.0	1500	6.6	2.50	M_0			12.4	21.0	21.0	21.0					
					M_N			12.1	16.0	16.0	16.0					
					$M_{0,max}$			37.1	46.6	54.8	54.8					
					M_{max}			37.1	46.6	54.8	54.8					
					n_{eto}			-	-	-	-					
14H32-	14.0	3225	11.9	4.70	M_0					14.4	20.3	21.0	21.0			
					M_N					13.6	14.0	14.0	14.0			
					$M_{0,max}$					33.0	43.9	53.2	54.8			
					M_{max}					33.0	43.9	53.2	54.8			
					n_{eto}					-	-	-	-			
14L15-	23.0	1500	9.7	3.60	M_0				20.5	27.1	28.0					
					M_N				20.9	23.0	23.0					
					$M_{0,max}$				48.0	61.4	77.1					
					M_{max}				48.0	61.4	77.1					
					n_{eto}				-	-	-					
14L32-	17.2	3225	15.0	5.80	M_0						19.0	24.0	28.0	28.0	28.0	
					M_N						17.2	17.2	17.2	17.2	17.2	
					$M_{0,max}$						45.0	55.3	63.9	77.1	77.1	
					M_{max}						45.0	55.3	63.9	77.1	77.1	
					n_{eto}						-	-	-	-	-	
14P14-	30.0	1350	10.8	4.20	M_0				26.7	35.2	37.0	37.0				
					M_N				24.4	30.0	30.0	30.0				
					$M_{0,max}$				56.1	71.7	93.3	105.1				
					M_{max}				56.1	71.7	93.3	105.1				
					n_{eto}				-	-	-	-				

► I... [A], M... [Nm], n... [r/min], P... [kW]



Selection tables, Servo Drives 9400 HighLine

Non-ventilated motors

► The data applies to a mains connection voltage of 3 x 400 V and an inverter switching frequency of 4 kHz.

					E94A□□	E0024	E0034	E0044	E0074	E0094	E0134	E0174	E0244	E0324	E0474	E0594
					I_N	1.9	3.1	5.0	8.8	11.7	16.3	20.6	29.4	38.4	47.0	59.0
					$I_{0,max}$	6.0	10.0	16.0	21.0	28.0	39.0	49.5	58.8	76.8	94.0	118.0
MCS	**M_N**	**n_N**	**I_N**	**P_N**	I_{max}	6.0	10.0	16.0	21.0	28.0	39.0	49.5	58.8	76.8	94.0	118.0
14P32-	21.0	3225	15.6	7.10	M_0						24.8	31.4	37.0	37.0	37.0	
					M_N						21.0	21.0	21.0	21.0	21.0	
					$M_{0,max}$						52.5	64.6	74.7	92.2	105.1	
					M_{max}						52.5	64.6	74.7	92.2	105.1	
					n_{eto}						-	-	-	-	-	
19F14-	27.0	1425	8.6	4.00	M_0				28.4	32.0	32.0					
					M_N				27.0	27.0	27.0					
					$M_{0,max}$				62.1	78.9	86.0					
					M_{max}				62.1	78.9	86.0					
					n_{eto}				-	-	-					
19F30-	21.0	3000	14.0	6.60	M_0						26.3	32.0	32.0	32.0		
					M_N						21.0	21.0	21.0	21.0		
					$M_{0,max}$						56.6	70.2	81.6	86.0		
					M_{max}						56.6	70.2	81.6	86.0		
					n_{eto}						-	-	-	-		
19J14-	40.0	1425	12.3	6.00	M_0					38.9	51.0	51.0				
					M_N					37.7	40.0	40.0				
					$M_{0,max}$					85.0	114.4	129.0				
					M_{max}					85.0	114.4	129.0				
					n_{eto}					-	-	-				
19J30-	29.0	3000	18.5	9.10	M_0						27.3	34.4	49.2	51.0	51.0	
					M_N						25.6	29.0	29.0	29.0	29.0	
					$M_{0,max}$						60.8	75.9	88.9	112.9	129.0	
					M_{max}						60.8	75.9	88.9	112.9	129.0	
					n_{eto}						-	-	-	-	-	
19P14-	51.0	1350	14.3	7.20	M_0						59.6	64.0	64.0	64.0		
					M_N						51.0	51.0	51.0	51.0		
					$M_{0,max}$						128.4	159.9	186.6	190.0		
					M_{max}						128.4	159.9	186.6	190.0		
					n_{eto}						-	-	-	-		
19P30-	32.0	3000	19.0	10.00	M_0						29.9	37.8	53.9	64.0	64.0	64.0
					M_N						27.5	32.0	32.0	32.0	32.0	32.0
					$M_{0,max}$						65.7	83.6	98.5	126.6	152.5	187.2
					M_{max}						65.7	83.6	98.5	126.6	152.5	187.2
					n_{eto}						-	-	-	-	-	-

► I... [A], M... [Nm], n... [r/min], P... [kW]



Selection tables, Servo Drives 9400 HighLine

Non-ventilated motors

► The data applies to a mains connection voltage of 3x230V and an inverter switching frequency of 4 kHz.

					E94A□□	E0024	E0034	E0044	E0074	E0094	E0134	E0174	E0244	E0324
					I_N	1.9	3.1	5.0	8.8	11.7	16.3	20.6	29.4	38.4
					$I_{0,max}$	6.0	10.0	16.0	21.0	28.0	39.0	49.5	58.8	76.8
MCS	**M_N**	**n_N**	**I_N**	**P_N**	I_{max}	6.0	10.0	16.0	21.0	28.0	39.0	49.5	58.8	76.8
06C41L	0.6	4050	2.6	0.25	M_0	0.6	0.8							
					M_N	0.5	0.6							
					$M_{0,max}$	1.5	2.3							
					M_{max}	1.5	2.3							
					n_{eto}	-	-							
06C60L	0.5	6000	4.0	0.31	M_0		0.6	0.8	0.8					
					M_N		0.4	0.5	0.5					
					$M_{0,max}$		1.5	2.2	2.4					
					M_{max}		1.5	2.2	2.4					
					n_{eto}		-	-	-					
06F41L	1.2	4050	2.9	0.51	M_0	1.0	1.5	1.5						
					M_N	0.8	1.2	1.2						
					$M_{0,max}$	2.7	4.2	4.4						
					M_{max}	2.7	4.2	4.4						
					n_{eto}	-	-	-						
06F60L	0.9	6000	3.8	0.57	M_0		1.2	1.5	1.5					
					M_N		0.8	0.9	0.9					
					$M_{0,max}$		3.1	4.3	4.4					
					M_{max}		3.1	4.3	4.4					
					n_{eto}		-	-	-					
06I41L	1.5	4050	3.2	0.64	M_0		2.0	2.0						
					M_N		1.5	1.5						
					$M_{0,max}$		5.4	6.2						
					M_{max}		5.4	6.2						
					n_{eto}		-	-						
06I60L	1.2	6000	3.8	0.75	M_0		1.5	2.0						
					M_N		1.0	1.2						
					$M_{0,max}$		4.4	6.2						
					M_{max}		4.4	6.2						
					n_{eto}		-	-						
09D41L	2.3	4050	4.6	1.00	M_0			3.1	3.3					
					M_N			2.3	2.3					
					$M_{0,max}$			8.0	9.5					
					M_{max}			8.0	9.5					
					n_{eto}			-	-					
09D60L	1.8	6000	7.0	1.10	M_0				2.8	3.3	3.3			
					M_N				1.8	1.8	1.8			
					$M_{0,max}$				5.7	7.3	9.5			
					M_{max}				5.7	7.3	9.5			
					n_{eto}				-	-	-			
09F38L	3.1	3750	5.0	1.20	M_0			3.5	4.2	4.2	4.2			
					M_N			3.1	3.1	3.1	3.1			
					$M_{0,max}$			9.8	12.0	13.8	15.0			
					M_{max}			9.8	12.0	13.8	15.0			
					n_{eto}			-	-	-	-			

► I... [A], M... [Nm], n... [r/min], P... [kW]



Selection tables, Servo Drives 9400 HighLine

Non-ventilated motors

► The data applies to a mains connection voltage of 3x230V and an inverter switching frequency of 4 kHz.

					E94A□□	E0024	E0034	E0044	E0074	E0094	E0134	E0174	E0244	E0324
					I_N	1.9	3.1	5.0	8.8	11.7	16.3	20.6	29.4	38.4
					$I_{0,max}$	6.0	10.0	16.0	21.0	28.0	39.0	49.5	58.8	76.8
MCS	**M_N**	**n_N**	**I_N**	**P_N**	I_{max}	6.0	10.0	16.0	21.0	28.0	39.0	49.5	58.8	76.8
09F60L	2.4	6000	7.9	1.50	M_0				3.5	4.2	4.2	4.2	4.2	
					M_N				2.4	2.4	2.4	2.4	2.4	
					$M_{0,max}$				7.8	9.8	12.6	14.5	15.0	
					M_{max}				7.8	9.8	12.6	14.5	15.0	
					n_{eto}				-	-	-	-	-	
09H41L	3.8	4050	6.8	1.60	M_0				5.5	5.3	5.5	5.5		
					M_N				3.8	3.0	3.8	3.8		
					$M_{0,max}$				12.4	11.8	19.7	20.0		
					M_{max}				12.4	11.8	19.7	20.0		
					n_{eto}				-	-	-	-		
09H60L	3.0	6000	8.0	1.90	M_0				4.0	5.5	5.5	5.5	5.5	
					M_N				3.0	3.8	3.0	3.0	3.0	
					$M_{0,max}$				9.2	15.6	15.4	18.3	20.0	
					M_{max}				9.2	15.6	15.4	18.3	20.0	
					n_{eto}				-	-	-	-	-	
09L41L	4.5	4050	8.4	1.90	M_0				5.3	7.0	7.5	7.5	7.5	7.5
					M_N				4.5	4.5	4.5	4.5	4.5	4.5
					$M_{0,max}$				11.9	15.5	20.9	25.8	29.7	31.9
					M_{max}				11.9	15.5	20.9	25.8	29.7	31.9
					n_{eto}				-	-	-	-	-	-
12D20L	5.5	1950	5.2	1.10	M_0			5.9	6.4					
					M_N			5.3	5.5					
					$M_{0,max}$			14.9	17.7					
					M_{max}			14.9	17.7					
					n_{eto}			-	-					
12D41L	4.3	4050	8.8	1.80	M_0				5.3	6.4	6.4	6.4		
					M_N				4.3	4.3	4.3	4.3		
					$M_{0,max}$				10.6	13.6	17.7	17.9		
					M_{max}				10.6	13.6	17.7	17.9		
					n_{eto}				-	-	-	-		
12H15L	10.0	1500	7.6	1.60	M_0				11.4	11.4	10.0			
					M_N				10.0	10.0	11.4			
					$M_{0,max}$				25.8	29.0	29.0			
					M_{max}				25.8	29.0	29.0			
					n_{eto}				-	-	-			
12H30L	8.0	3000	10.5	2.50	M_0				7.4	9.8	11.4			
					M_N				6.7	8.0	8.0			
					$M_{0,max}$				16.4	21.5	29.0			
					M_{max}				16.4	21.5	29.0			
					n_{eto}				-	-	-			
12L20L	13.5	1950	11.8	2.80	M_0				10.6	14.0	15.0	15.0	15.0	
					M_N				10.1	13.3	13.5	13.5	13.5	
					$M_{0,max}$				24.4	31.5	41.8	50.5	56.0	
					M_{max}				24.4	31.5	41.8	50.5	56.0	
					n_{eto}				-	-	-	-	-	

► I... [A], M... [Nm], n... [r/min], P... [kW]



Selection tables, Servo Drives 9400 HighLine

Forced ventilated IP54 motors

► The data applies to a mains connection voltage of 3 x 400 V and an inverter switching frequency of 4 kHz.

					E94A□□	E0024	E0034	E0044	E0074	E0094	E0134	E0174	E0244	E0324	E0474	E0594
					I_N	1.9	3.1	5.0	8.8	11.7	16.3	20.6	29.4	38.4	47.0	59.0
					$I_{0,max}$	6.0	10.0	16.0	21.0	28.0	39.0	49.5	58.8	76.8	94.0	118.0
MCS	**M_N**	**n_N**	**I_N**	**P_N**	I_{max}	6.0	10.0	16.0	21.0	28.0	39.0	49.5	58.8	76.8	94.0	118.0
12D17-	7.0	1650	3.0	1.20	M_0	4.4	7.3									
					M_N	4.0	7.0									
					$M_{0,max}$	11.8	17.7									
					M_{max}	11.8	17.7									
					n_{eto}	-	-									
12D35-	6.0	3525	5.6	2.20	M_0			5.9	7.5							
					M_N			5.4	6.0							
					$M_{0,max}$			14.7	17.7							
					M_{max}			14.7	17.7							
					n_{eto}			-	-							
12H14-	12.0	1350	4.1	1.70	M_0		8.7	12.8								
					M_N		8.2	12.0								
					$M_{0,max}$		24.6	29.0								
					M_{max}		24.6	29.0								
					n_{eto}		-	-								
12H34-	10.5	3375	7.5	3.70	M_0			7.0	12.8	12.8	12.8					
					M_N			6.6	10.5	10.5	10.5					
					$M_{0,max}$			20.1	25.8	29.0	29.0					
					M_{max}			20.1	25.8	29.0	29.0					
					n_{eto}			-	-	-	-					
12L17-	17.0	1650	6.7	2.90	M_0			12.1	19.0	19.0	19.0					
					M_N			11.4	17.0	17.0	17.0					
					$M_{0,max}$			35.5	44.6	55.7	56.4					
					M_{max}			35.5	44.6	55.7	56.4					
					n_{eto}			-	-	-	-					
12L39-	14.0	3900	11.7	5.70	M_0				10.6	15.3	19.0	19.0	19.0			
					M_N				9.5	13.9	14.0	14.0	14.0			
					$M_{0,max}$				24.4	31.6	41.9	50.8	56.4			
					M_{max}				24.4	31.6	41.9	50.8	56.4			
					n_{eto}				-	-	-	-	-			
14D14-	12.0	1350	5.4	1.70	M_0			11.0	12.5							
					M_N			11.0	12.0							
					$M_{0,max}$			28.3	29.0							
					M_{max}			28.3	29.0							
					n_{eto}			-	-							
14D30-	10.5	3000	9.7	3.30	M_0				9.6	12.5	12.5					
					M_N				9.5	10.5	10.5					
					$M_{0,max}$				20.2	25.6	29.0					
					M_{max}				20.2	25.6	29.0					
					n_{eto}				-	-	-					
14H12-	23.5	1200	8.3	3.00	M_0			12.4	24.1	25.5	25.5					
					M_N			12.1	23.5	23.5	23.5					
					$M_{0,max}$			37.1	46.6	54.8	54.8					
					M_{max}			37.1	46.6	54.8	54.8					
					n_{eto}			-	-	-	-					

► I... [A], M... [Nm], n... [r/min], P... [kW]



Selection tables, Servo Drives 9400 HighLine

Forced ventilated IP54 motors

► The data applies to a mains connection voltage of 3 x 400 V and an inverter switching frequency of 4 kHz.

					E94A□□	E0024	E0034	E0044	E0074	E0094	E0134	E0174	E0244	E0324	E0474	E0594
					I_N	1.9	3.1	5.0	8.8	11.7	16.3	20.6	29.4	38.4	47.0	59.0
					$I_{0,max}$	6.0	10.0	16.0	21.0	28.0	39.0	49.5	58.8	76.8	94.0	118.0
MCS	**M_N**	**n_N**	**I_N**	**P_N**	I_{max}	6.0	10.0	16.0	21.0	28.0	39.0	49.5	58.8	76.8	94.0	118.0
14H28-	20.5	2775	15.0	6.00	M_0					16.1	20.5	25.5	25.5			
					M_N					15.9	20.5	20.5	20.5			
					$M_{0,max}$					33.0	43.9	53.2	54.8			
					M_{max}					33.0	43.9	53.2	54.8			
					n_{eto}					-	-	-	-			
14L14-	30.5	1350	11.8	4.30	M_0				20.5	30.0	34.5					
					M_N				20.5	30.0	30.5					
					$M_{0,max}$				48.0	61.4	77.1					
					M_{max}				48.0	61.4	77.1					
					n_{eto}				-	-	-					
14L30-	25.5	3000	20.8	8.00	M_0						21.0	26.6	34.5	34.5	34.5	
					M_N						20.0	25.3	25.5	25.5	25.5	
					$M_{0,max}$						45.0	55.3	63.9	77.1	77.1	
					M_{max}						45.0	55.3	63.9	77.1	77.1	
					n_{eto}						-	-	-	-	-	
14P11-	42.0	1050	13.4	4.60	M_0				26.7	36.4	43.5	43.5				
					M_N				24.4	36.4	42.0	42.0				
					$M_{0,max}$				56.1	71.7	93.3	105.1				
					M_{max}				56.1	71.7	93.3	105.1				
					n_{eto}				-	-	-	-				
14P26-	33.0	2625	21.9	9.10	M_0						24.8	31.4	43.5	43.5	43.5	
					M_N						24.6	31.0	33.0	33.0	33.0	
					$M_{0,max}$						52.5	64.6	74.7	92.2	105.1	
					M_{max}						52.5	64.6	74.7	92.2	105.1	
					n_{eto}						-	-	-	-	-	
19F12-	38.0	1200	11.3	4.80	M_0				29.9	39.5	41.5					
					M_N				29.3	38.0	38.0					
					$M_{0,max}$				62.1	78.9	86.0					
					M_{max}				62.1	78.9	86.0					
					n_{eto}				-	-	-					
19F29-	32.5	2850	20.1	9.70	M_0						26.3	34.9	41.5	41.5		
					M_N						26.0	32.5	32.5	32.5		
					$M_{0,max}$						56.6	70.2	81.6	86.0		
					M_{max}						56.6	70.2	81.6	86.0		
					n_{eto}						-	-	-	-		
19J12-	62.5	1200	18.3	7.90	M_0						56.6	70.5				
					M_N						55.7	62.5				
					$M_{0,max}$						114.4	129.0				
					M_{max}						114.4	129.0				
					n_{eto}						-	-				
19J29-	50.5	2850	31.0	15.10	M_0								49.2	66.7	70.5	
					M_N								47.9	50.5	50.5	
					$M_{0,max}$								88.9	112.9	129.0	
					M_{max}								88.9	112.9	129.0	
					n_{eto}								-	-	-	

► I... [A], M... [Nm], n... [r/min], P... [kW]



Selection tables, Servo Drives 9400 HighLine

Forced ventilated IP54 motors

► The data applies to a mains connection voltage of 3 x 400 V and an inverter switching frequency of 4 kHz.

					E94A□□	E0024	E0034	E0044	E0074	E0094	E0134	E0174	E0244	E0324	E0474	E0594
					I_N	1.9	3.1	5.0	8.8	11.7	16.3	20.6	29.4	38.4	47.0	59.0
					$I_{0,max}$	6.0	10.0	16.0	21.0	28.0	39.0	49.5	58.8	76.8	94.0	118.0
MCS	**M_N**	**n_N**	**I_N**	**P_N**	I_{max}	6.0	10.0	16.0	21.0	28.0	39.0	49.5	58.8	76.8	94.0	118.0
19P12-	72.0	1200	21.3	9.00	M_0							79.1	86.0	86.0		
					M_N							69.6	72.0	72.0		
					$M_{0,max}$							159.9	186.6	190.0		
					M_{max}							159.9	186.6	190.0		
					n_{eto}							-	-	-		
19P29-	53.0	2850	29.5	15.80	M_0								56.5	73.9	86.0	86.0
					M_N								52.8	53.0	53.0	53.0
					$M_{0,max}$								98.5	126.6	152.5	187.2
					M_{max}								98.5	126.6	152.5	187.2
					n_{eto}								-	-	-	-

► I... [A], M... [Nm], n... [r/min], P... [kW]





Selection tables, Inverter Drives 8400 TopLine

Non-ventilated motors

► The data applies to a mains connection voltage of 3 x 400 V and an inverter switching frequency of 8 kHz.

					E84AVTC	□3714	□5514	□7514	□1124	□1524	□2224	□3024
					I_N	1.3	1.8	2.4	3.2	3.9	5.9	7.3
					$I_{0,max}$	2.0	2.7	3.6	4.8	5.9	8.4	11.0
MCS	M_N	n_N	I_N	P_N	I_{max}	2.6	3.6	4.8	6.4	7.8	11.8	14.6
06C41-	0.6	4050	1.3	0.25	M_0	0.8	0.8	0.8	0.8	0.8		
					M_N	0.6	0.6	0.6	0.6	0.6		
					$M_{0,max}$	1.4	1.7	2.3	2.4	2.4		
					M_{max}	1.4	1.7	2.3	2.4	2.4		
					n_{eto}	-	-	-	-	-		
06C60-	0.5	6000	2.4	0.31	M_0			0.8	0.8	0.8	0.8	0.8
					M_N			0.5	0.5	0.5	0.5	0.5
					$M_{0,max}$			1.3	1.6	2.0	2.4	2.4
					M_{max}			1.3	1.6	2.0	2.4	2.4
					n_{eto}			-	-	-	-	-
06F41-	1.2	4050	1.5	0.51	M_0	1.3	1.5	1.5	1.5	1.5		
					M_N	1.0	1.2	1.2	1.2	1.2		
					$M_{0,max}$	2.3	3.2	4.3	4.4	4.4		
					M_{max}	2.3	3.2	4.3	4.4	4.4		
					n_{eto}	-	-	-	-	-		
06F60-	0.9	6000	2.5	0.57	M_0			1.2	1.5	1.5	1.5	1.5
					M_N			0.9	0.9	0.9	0.9	0.9
					$M_{0,max}$			2.1	3.3	4.0	4.4	4.4
					M_{max}			2.1	3.3	4.0	4.4	4.4
					n_{eto}			-	-	-	-	-
06I41-	1.5	4050	1.6	0.64	M_0	1.6	2.0	2.0	2.0	2.0		
					M_N	1.2	1.5	1.5	1.5	1.5		
					$M_{0,max}$	2.9	4.0	5.3	6.2	6.2		
					M_{max}	2.9	4.0	5.3	6.2	6.2		
					n_{eto}	-	-	-	-	-		
06I60-	1.2	6000	2.9	0.75	M_0				2.0	2.0	2.0	2.0
					M_N				1.2	1.2	1.2	1.2
					$M_{0,max}$				3.6	4.4	5.7	5.7
					M_{max}				3.6	4.4	5.7	5.7
					n_{eto}				-	-	-	-
09D41-	2.3	4050	2.3	1.00	M_0		2.2	3.1	3.3	3.3	3.3	3.3
					M_N		1.7	2.3	2.3	2.3	2.3	2.3
					$M_{0,max}$		4.0	5.3	6.7	8.2	9.4	9.4
					M_{max}		4.0	5.3	6.7	8.2	9.4	9.4
					n_{eto}		-	-	-	-	-	-
09D60-	1.8	6000	3.8	1.10	M_0				2.0	2.4	3.3	3.3
					M_N				1.5	1.8	1.8	1.8
					$M_{0,max}$				3.5	4.2	6.3	7.8
					M_{max}				3.5	4.2	6.3	7.8
					n_{eto}				-	-	-	-
09F38-	3.1	3750	2.5	1.20	M_0			3.4	4.2	4.2	4.2	4.2
					M_N			3.0	3.1	3.1	3.1	3.1
					$M_{0,max}$			6.6	8.4	10.2	12.0	12.0
					M_{max}			6.6	8.4	10.2	12.0	12.0
					n_{eto}			-	-	-	-	-

► I... [A], M... [Nm], n... [r/min], P... [kW]



Selection tables, Inverter Drives 8400 TopLine

Non-ventilated motors

► The data applies to a mains connection voltage of 3 x 400 V and an inverter switching frequency of 8 kHz.

□4024	□5524	□7524	□1134	□1534	□1834	□2234	□3034	E84AVTC					
9.5	13.0	16.5	23.5	32.0	39.0	47.0	61.0	I_N					
14.3	19.5	26.4	32.9	43.2	60.0	70.5	91.5	$I_{0,max}$					
19.0	26.0	33.0	47.0	64.0	78.0	94.0	122.0	I_{max}	P_N	I_N	n_N	M_N	MCS
								M_0	0.25	1.3	4050	0.6	06C41-
								M_N					
								$M_{0,max}$					
								M_{max}					
								n_{eto}					
								M_0	0.31	2.4	6000	0.5	06C60-
								M_N					
								$M_{0,max}$					
								M_{max}					
								n_{eto}					
								M_0	0.51	1.5	4050	1.2	06F41-
								M_N					
								$M_{0,max}$					
								M_{max}					
								n_{eto}					
								M_0	0.57	2.5	6000	0.9	06F60-
								M_N					
								$M_{0,max}$					
								M_{max}					
								n_{eto}					
								M_0	0.64	1.6	4050	1.5	06I41-
								M_N					
								$M_{0,max}$					
								M_{max}					
								n_{eto}					
								M_0	0.75	2.9	6000	1.2	06I60-
								M_N					
								$M_{0,max}$					
								M_{max}					
								n_{eto}					
								M_0	1.00	2.3	4050	2.3	09D41-
								M_N					
								$M_{0,max}$					
								M_{max}					
								n_{eto}					
3.3	3.3							M_0	1.10	3.8	6000	1.8	09D60-
1.8	1.8							M_N					
9.1	9.3							$M_{0,max}$					
9.1	9.3							M_{max}					
-	-							n_{eto}					
								M_0	1.20	2.5	3750	3.1	09F38-
								M_N					
								$M_{0,max}$					
								M_{max}					
								n_{eto}					

► I... [A], M... [Nm], n... [r/min], P... [kW]



Selection tables, Inverter Drives 8400 TopLine

Non-ventilated motors

► The data applies to a mains connection voltage of 3 x 400 V and an inverter switching frequency of 8 kHz.

					E84AVTC	□3714	□5514	□7514	□1124	□1524	□2224	□3024
					I_N	1.3	1.8	2.4	3.2	3.9	5.9	7.3
					$I_{0,max}$	2.0	2.7	3.6	4.8	5.9	8.4	11.0
MCS	M_N	n_N	I_N	P_N	I_{max}	2.6	3.6	4.8	6.4	7.8	11.8	14.6
09F60-	2.4	6000	4.5	1.50	M_0						4.2	4.2
					M_N						2.4	2.4
					$M_{0,max}$						7.8	9.6
					M_{max}						7.8	9.6
					n_{eto}						-	-
09H41-	3.8	4050	3.4	1.60	M_0				4.7	5.0	5.5	5.5
					M_N				3.6	3.8	3.8	3.8
					$M_{0,max}$				8.1	9.9	14.0	17.4
					M_{max}				8.1	9.9	14.0	17.4
					n_{eto}				-	-	-	-
09H60-	3.0	6000	6.0	1.90	M_0						4.4	4.5
					M_N						3.0	3.0
					$M_{0,max}$						7.5	9.3
					M_{max}						7.5	9.3
					n_{eto}						-	-
09L41-	4.5	4050	4.2	1.90	M_0				3.9	4.7	7.5	7.5
					M_N				3.4	4.2	4.5	4.5
					$M_{0,max}$				7.3	8.9	13.1	16.3
					M_{max}				7.3	8.9	13.1	16.3
					n_{eto}				-	-	-	-
09L51-	3.6	5100	6.9	1.90	M_0							4.2
					M_N							3.6
					$M_{0,max}$							8.3
					M_{max}							8.3
					n_{eto}							-
12D20-	5.5	1950	2.6	1.10	M_0			5.7	6.4	6.4	6.4	6.4
					M_N			5.1	5.5	5.5	5.5	5.5
					$M_{0,max}$			9.6	12.6	15.3	17.7	17.7
					M_{max}			9.6	12.6	15.3	17.7	17.7
					n_{eto}			-	-	-	-	-
12D41-	4.3	4050	4.5	1.80	M_0				3.8	4.6	6.4	6.4
					M_N				3.0	3.7	4.3	4.3
					$M_{0,max}$				6.4	7.8	11.4	14.0
					M_{max}				6.4	7.8	11.4	14.0
					n_{eto}				-	-	-	-
12H15-	10.0	1500	3.8	1.60	M_0				9.2	10.9	11.4	11.4
					M_N				8.4	10.0	10.0	10.0
					$M_{0,max}$				16.4	20.0	29.0	29.0
					M_{max}				16.4	20.0	29.0	29.0
					n_{eto}				-	-	-	-
12H35-	7.5	3525	5.7	2.80	M_0						9.8	9.8
					M_N						7.5	7.5
					$M_{0,max}$						15.2	18.8
					M_{max}						15.2	18.8
					n_{eto}						-	-

► I... [A], M... [Nm], n... [r/min], P... [kW]



Selection tables, Inverter Drives 8400 TopLine

Non-ventilated motors

► The data applies to a mains connection voltage of 3 x 400 V and an inverter switching frequency of 8 kHz.

□4024	□5524	□7524	□1134	□1534	□1834	□2234	□3034	E84AVTC					
9.5	13.0	16.5	23.5	32.0	39.0	47.0	61.0	I_N					
14.3	19.5	26.4	32.9	43.2	60.0	70.5	91.5	$I_{0,max}$					
19.0	26.0	33.0	47.0	64.0	78.0	94.0	122.0	I_{max}	P_N	I_N	n_N	M_N	MCS
4.2	4.2							M_0					
2.4	2.4							M_N					
11.1	11.4							$M_{0,max}$	1.50	4.5	6000	2.4	09F60-
11.1	11.4							M_{max}					
-	-							n_{eto}					
5.5	5.5							M_0					
3.8	3.8							M_N					
19.6	20.1							$M_{0,max}$	1.60	3.4	4050	3.8	09H41-
19.6	20.1							M_{max}					
-	-							n_{eto}					
5.5	5.5							M_0					
3.0	3.0							M_N					
11.4	11.7							$M_{0,max}$	1.90	6.0	6000	3.0	09H60-
11.4	11.7							M_{max}					
-	-							n_{eto}					
7.5	7.5							M_0					
4.5	4.5							M_N					
20.3	20.8							$M_{0,max}$	1.90	4.2	4050	4.5	09L41-
20.3	20.8							M_{max}					
-	-							n_{eto}					
7.5	7.5	7.5	7.5					M_0					
3.6	3.6	3.6	3.6					M_N					
10.8	19.1	19.1	19.1					$M_{0,max}$	1.90	6.9	5100	3.6	09L51-
10.8	19.1	19.1	19.1					M_{max}					
-	-	-	-					n_{eto}					
								M_0					
								M_N					
								$M_{0,max}$	1.10	2.6	1950	5.5	12D20-
								M_{max}					
								n_{eto}					
6.4	6.4							M_0					
4.3	4.3							M_N					
16.9	17.3							$M_{0,max}$	1.80	4.5	4050	4.3	12D41-
16.9	17.3							M_{max}					
-	-							n_{eto}					
11.4	11.4							M_0					
10.0	10.0							M_N					
28.3	29.0							$M_{0,max}$	1.60	3.8	1500	10.0	12H15-
28.3	29.0							M_{max}					
-	-							n_{eto}					
11.4	11.4							M_0					
7.5	7.5							M_N					
23.5	24.1							$M_{0,max}$	2.80	5.7	3525	7.5	12H35-
23.5	24.1							M_{max}					
-	-							n_{eto}					

► I... [A], M... [Nm], n... [r/min], P... [kW]



Selection tables, Inverter Drives 8400 TopLine

Non-ventilated motors

► The data applies to a mains connection voltage of 3 x 400 V and an inverter switching frequency of 8 kHz.

					E84AVTC	□3714	□5514	□7514	□1124	□1524	□2224	□3024
					I_N	1.3	1.8	2.4	3.2	3.9	5.9	7.3
					$I_{0,max}$	2.0	2.7	3.6	4.8	5.9	8.4	11.0
MCS	**M_N**	**n_N**	**I_N**	**P_N**	I_{max}	2.6	3.6	4.8	6.4	7.8	11.8	14.6
12L20-	13.5	1950	5.9	2.80	M_0						15.0	15.0
					M_N						13.5	13.5
					$M_{0,max}$						27.4	33.9
					M_{max}						27.4	33.9
					n_{eto}						-	-
12L41-	11.0	4050	10.2	4.70	M_0							
					M_N							
					$M_{0,max}$							
					M_{max}							
					n_{eto}							
14D15-	9.2	1500	4.5	1.45	M_0				7.0	8.5	11.0	11.0
					M_N				6.6	8.0	9.2	9.2
					$M_{0,max}$				13.1	16.0	22.7	28.1
					M_{max}				13.1	16.0	22.7	28.1
					n_{eto}				-	-	-	-
14D36-	7.5	3600	7.5	2.80	M_0							8.0
					M_N							7.3
					$M_{0,max}$							15.2
					M_{max}							15.2
					n_{eto}							-
14H15-	16.0	1500	6.6	2.50	M_0							17.3
					M_N							16.0
					$M_{0,max}$							35.3
					M_{max}							35.3
					n_{eto}							-
14H32-	14.0	3225	11.9	4.70	M_0							
					M_N							
					$M_{0,max}$							
					M_{max}							
					n_{eto}							
14L15-	23.0	1500	9.7	3.60	M_0							
					M_N							
					$M_{0,max}$							
					M_{max}							
					n_{eto}							
14L32-	17.2	3225	15.0	5.80	M_0							
					M_N							
					$M_{0,max}$							
					M_{max}							
					n_{eto}							
14P14-	30.0	1350	10.8	4.20	M_0							
					M_N							
					$M_{0,max}$							
					M_{max}							
					n_{eto}							

► I... [A], M... [Nm], n... [r/min], P... [kW]



Selection tables, Inverter Drives 8400 TopLine

Non-ventilated motors

► The data applies to a mains connection voltage of 3 x 400 V and an inverter switching frequency of 8 kHz.

□4024	□5524	□7524	□1134	□1534	□1834	□2234	□3034	E84AVTC					
9.5	13.0	16.5	23.5	32.0	39.0	47.0	61.0	I_N					
14.3	19.5	26.4	32.9	43.2	60.0	70.5	91.5	$I_{0,max}$					
19.0	26.0	33.0	47.0	64.0	78.0	94.0	122.0	I_{max}	P_N	I_N	n_N	M_N	MCS
15.0	15.0							M_0					
13.5	13.5							M_N					
40.8	41.9							$M_{0,max}$	2.80	5.9	1950	13.5	12L20-
40.8	41.9							M_{max}					
-	-							n_{eto}					
14.0	15.0	15.0	15.0	15.0				M_0					
10.2	11.0	11.0	11.0	11.0				M_N					
22.2	30.4	35.5	35.5	35.5				$M_{0,max}$	4.70	10.2	4050	11.0	12L41-
22.2	30.4	49.6	49.6	49.6				M_{max}					
-	-	-	-	-				n_{eto}					
11.0	11.0							M_0					
9.2	9.2							M_N					
28.3	29.0							$M_{0,max}$	1.45	4.5	1500	9.2	14D15-
28.3	29.0							M_{max}					
-	-							n_{eto}					
11.0	11.0	11.0	11.0					M_0					
7.5	7.5	7.5	7.5					M_N					
18.5	25.3	29.0	29.0					$M_{0,max}$	2.80	7.5	3600	7.5	14D36-
18.5	22.2	22.2	22.2					M_{max}					
-	-	-	-					n_{eto}					
21.0	21.0							M_0					
16.0	16.0							M_N					
42.8	43.9							$M_{0,max}$	2.50	6.6	1500	16.0	14H15-
42.8	43.9							M_{max}					
-	-							n_{eto}					
12.9	16.2	21.0	21.0	21.0				M_0					
11.2	14.0	14.0	14.0	14.0				M_N					
23.2	31.7	37.1	37.1	37.1				$M_{0,max}$	4.70	11.9	3225	14.0	14H32-
23.2	31.7	51.9	51.9	51.9				M_{max}					
-	-	-	-	-				n_{eto}					
27.4	28.0	28.0	28.0					M_0					
22.5	23.0	23.0	23.0					M_N					
43.8	52.9	52.9	52.9					$M_{0,max}$	3.60	9.7	1500	23.0	14L15-
43.8	60.0	73.8	73.8					M_{max}					
-	-	-	-					n_{eto}					
	15.2	27.4	27.4	28.0	28.0	28.0		M_0					
	14.9	17.2	17.2	17.2	17.2	17.2		M_N					
	31.3	39.7	52.9	52.9	52.9	52.9		$M_{0,max}$	5.80	15.0	3225	17.2	14L32-
	31.3	57.6	73.9	73.9	73.9	73.9		M_{max}					
	-	-	-	-	-	-		n_{eto}					
32.5	37.0	37.0	37.0	37.0				M_0					
26.4	30.0	30.0	30.0	30.0				M_N					
51.2	70.0	80.0	80.0	80.0				$M_{0,max}$	4.20	10.8	1350	30.0	14P14-
51.2	70.0	105.1	105.1	105.1				M_{max}					
-	-	-	-	-				n_{eto}					

► I... [A], M... [Nm], n... [r/min], P... [kW]



Selection tables, Inverter Drives 8400 TopLine

Non-ventilated motors

► The data applies to a mains connection voltage of 3 x 400 V and an inverter switching frequency of 8 kHz.

					E84AVTC	□3714	□5514	□7514	□1124	□1524	□2224	□3024
					I_N	1.3	1.8	2.4	3.2	3.9	5.9	7.3
					$I_{0,max}$	2.0	2.7	3.6	4.8	5.9	8.4	11.0
MCS	**M_N**	**n_N**	**I_N**	**P_N**	I_{max}	2.6	3.6	4.8	6.4	7.8	11.8	14.6
14P32-	21.0	3225	15.6	7.10	M_0							
					M_N							
					$M_{0,max}$							
					M_{max}							
					n_{eto}							
19F14-	27.0	1425	8.6	4.00	M_0							23.6
					M_N							22.9
					$M_{0,max}$							45.9
					M_{max}							45.9
					n_{eto}							-
19F30-	21.0	3000	14.0	6.60	M_0							
					M_N							
					$M_{0,max}$							
					M_{max}							
					n_{eto}							
19J14-	40.0	1425	12.3	6.00	M_0							
					M_N							
					$M_{0,max}$							
					M_{max}							
					n_{eto}							
19J30-	29.0	3000	18.5	9.10	M_0							
					M_N							
					$M_{0,max}$							
					M_{max}							
					n_{eto}							
19P14-	51.0	1350	14.3	7.20	M_0							
					M_N							
					$M_{0,max}$							
					M_{max}							
					n_{eto}							
19P30-	32.0	3000	19.0	10.00	M_0							
					M_N							
					$M_{0,max}$							
					M_{max}							
					n_{eto}							

► I... [A], M... [Nm], n... [r/min], P... [kW]



Selection tables, Inverter Drives 8400 TopLine

Non-ventilated motors

► The data applies to a mains connection voltage of 3 x 400 V and an inverter switching frequency of 8 kHz.

□4024	□5524	□7524	□1134	□1534	□1834	□2234	□3034	E84AVTC					
9.5	13.0	16.5	23.5	32.0	39.0	47.0	61.0	I_N					
14.3	19.5	26.4	32.9	43.2	60.0	70.5	91.5	$I_{0,max}$					
19.0	26.0	33.0	47.0	64.0	78.0	94.0	122.0	I_{max}	P_N	I_N	n_N	M_N	MCS
	19.8	35.8	35.8	37.0	37.0	37.0		M_0					
	17.5	21.0	21.0	21.0	21.0	21.0		M_N					
	36.5	46.3	61.8	61.8	61.8	61.8		$M_{0,max}$	7.10	15.6	3225	21.0	14P32-
	36.5	67.3	86.4	86.4	86.4	86.4		M_{max}					
	-	-	-	-	-	-		n_{eto}					
32.0	32.0	32.0	32.0					M_0					
27.0	27.0	27.0	27.0					M_N					
56.7	68.3	68.3	68.3					$M_{0,max}$	4.00	8.6	1425	27.0	19F14-
56.7	77.6	86.0	86.0					M_{max}					
-	-	-	-					n_{eto}					
	21.0	32.0	32.0	32.0				M_0					
	19.5	21.0	21.0	21.0				M_N					
	47.2	47.2	47.2	47.2				$M_{0,max}$	6.60	14.0	3000	21.0	19F30-
	38.9	68.3	68.3	68.3				M_{max}					
	-	-	-	-				n_{eto}					
	43.6	51.0	51.0	51.0				M_0					
	40.0	40.0	40.0	40.0				M_N					
	81.1	96.0	96.0	96.0				$M_{0,max}$	6.00	12.3	1425	40.0	19J14-
	81.1	129.0	129.0	129.0				M_{max}					
	-	-	-	-				n_{eto}					
			39.3	51.0	51.0	51.0	51.0	M_0					
			29.0	29.0	29.0	29.0	29.0	M_N					
			73.6	79.5	79.5	79.5	79.5	$M_{0,max}$	9.10	18.5	3000	29.0	19J30-
			110.4	127.6	127.6	127.6	127.6	M_{max}					
			-	-	-	-	-	n_{eto}					
	47.5	64.0	64.0	64.0				M_0					
	46.4	51.0	51.0	51.0				M_N					
	92.7	106.7	106.7	106.7				$M_{0,max}$	7.20	14.3	1350	51.0	19P14-
	92.7	155.5	155.5	155.5				M_{max}					
	-	-	-	-				n_{eto}					
			43.1	58.7	64.0	64.0	64.0	M_0					
			32.0	32.0	32.0	32.0	32.0	M_N					
			79.2	87.6	87.6	87.6	87.6	$M_{0,max}$	10.00	19.0	3000	32.0	19P30-
			118.6	144.3	144.3	144.3	144.3	M_{max}					
			-	-	-	-	-	n_{eto}					

► I... [A], M... [Nm], n... [r/min], P... [kW]



Selection tables, Inverter Drives 8400 TopLine

Forced ventilated IP54 motors

► The data applies to a mains connection voltage of 3 x 400 V and an inverter switching frequency of 8 kHz.

					E84AVTC	□1124	□1524	□2224	□3024	□4024	□5524	□7524	□1134	□1534	□1834	□2234	□3034
					I_N	3.2	3.9	5.9	7.3	9.5	13.0	16.5	23.5	32.0	39.0	47.0	61.0
					$I_{0,max}$	4.8	5.9	8.4	11.0	14.3	19.5	26.4	32.9	43.2	60.0	70.5	91.5
MCS	M_N	n_N	I_N	P_N	I_{max}	6.4	7.8	11.8	14.6	19.0	26.0	33.0	47.0	64.0	78.0	94.0	122.0
12D17-	7.0	1650	3.0	1.20	M_0	7.5	7.5	7.5	7.5								
					M_N	7.0	7.0	7.0	7.0								
					$M_{0,max}$	12.6	15.3	17.7	17.7								
					M_{max}	12.6	15.3	17.7	17.7								
					n_{eto}	-	-	-	-								
12D35-	6.0	3525	5.6	2.20	M_0		4.6	7.5	7.5	7.5	7.5						
					M_N		3.7	6.0	6.0	6.0	6.0						
					$M_{0,max}$		7.8	11.4	14.0	16.9	17.3						
					M_{max}		7.8	11.4	14.0	16.9	17.3						
					n_{eto}		-	-	-	-	-						
12H14-	12.0	1350	4.1	1.70	M_0	8.9	10.9	12.8	12.8	12.8	12.8						
					M_N	8.5	10.3	12.0	12.0	12.0	12.0						
					$M_{0,max}$	16.4	20.0	29.0	29.0	28.3	29.0						
					M_{max}	16.4	20.0	29.0	29.0	28.3	29.0						
					n_{eto}	-	-	-	-	-	-						
12H34-	10.5	3375	7.5	3.70	M_0				10.2	12.8	12.8						
					M_N				10.0	10.5	10.5						
					$M_{0,max}$				18.8	23.5	24.1						
					M_{max}				18.8	23.5	24.1						
					n_{eto}				-	-	-						
12L17-	17.0	1650	6.7	2.90	M_0				18.5	19.0	19.0						
					M_N				17.0	17.0	17.0						
					$M_{0,max}$				33.9	40.8	41.9						
					M_{max}				33.9	40.8	41.9						
					n_{eto}				-	-	-						
12L39-	14.0	3900	11.7	5.70	M_0					17.2	17.2	19.0	19.0	19.0			
					M_N					14.0	14.0	14.0	14.0	14.0			
					$M_{0,max}$					22.2	30.4	35.5	35.5	35.5			
					M_{max}					22.2	30.4	49.6	49.6	49.6			
					n_{eto}					-	-	-	-	-			
14D14-	12.0	1350	5.4	1.70	M_0		8.5	12.5	12.5	12.5	12.5						
					M_N		8.0	12.0	12.0	12.0	12.0						
					$M_{0,max}$		16.0	22.7	28.1	28.3	29.0						
					M_{max}		16.0	22.7	28.1	28.3	29.0						
					n_{eto}		-	-	-	-	-						
14D30-	10.5	3000	9.7	3.30	M_0				7.7	12.2	12.5	12.5	12.5				
					M_N				7.0	9.8	10.0	10.0	10.0				
					$M_{0,max}$				15.2	18.5	25.3	29.0	29.0				
					M_{max}				15.2	18.5	22.2	22.2	22.2				
					n_{eto}				-	-	-	-	-				
14H12-	23.5	1200	8.3	3.00	M_0				18.0	25.5	25.5						
					M_N				17.9	23.5	23.5						
					$M_{0,max}$				35.3	42.8	43.9						
					M_{max}				35.3	42.8	43.9						
					n_{eto}				-	-	-						

► I... [A], M... [Nm], n... [r/min], P... [kW]



Selection tables, Inverter Drives 8400 TopLine

Forced ventilated IP54 motors

► The data applies to a mains connection voltage of 3 x 400 V and an inverter switching frequency of 8 kHz.

					E84AVTC	□1124	□1524	□2224	□3024	□4024	□5524	□7524	□1134	□1534	□1834	□2234	□3034
					I_N	3.2	3.9	5.9	7.3	9.5	13.0	16.5	23.5	32.0	39.0	47.0	61.0
					$I_{0,max}$	4.8	5.9	8.4	11.0	14.3	19.5	26.4	32.9	43.2	60.0	70.5	91.5
MCS	M_N	n_N	I_N	P_N	I_{max}	6.4	7.8	11.8	14.6	19.0	26.0	33.0	47.0	64.0	78.0	94.0	122.0
14H28-	20.5	2775	15.0	6.00	M_0						16.2	25.5	25.5	25.5			
					M_N						16.1	20.5	20.5	20.5			
					$M_{0,max}$						31.7	37.1	37.1	37.1			
					M_{max}						31.7	51.9	51.9	51.9			
					n_{eto}						-	-	-	-			
14L14-	30.5	1350	11.8	4.30	M_0					26.9	33.4	34.5	34.5				
					M_N					24.6	30.5	30.5	30.5				
					$M_{0,max}$					43.8	52.9	52.9	52.9				
					M_{max}					43.8	60.0	73.8	73.8				
					n_{eto}					-	-	-	-				
14L30-	25.5	3000	20.8	8.00	M_0								27.4	34.5	34.5	34.5	
					M_N								25.5	25.5	25.5	25.5	
					$M_{0,max}$								52.9	52.9	52.9	52.9	
					M_{max}								73.9	73.9	73.9	73.9	
					n_{eto}								-	-	-	-	
14P11-	42.0	1050	13.4	4.60	M_0						38.9	43.5	43.5	43.5			
					M_N						38.8	42.0	42.0	42.0			
					$M_{0,max}$						70.0	80.0	80.0	80.0			
					M_{max}						70.0	105.1	105.1	105.1			
					n_{eto}						-	-	-	-			
14P26-	33.0	2625	21.9	9.10	M_0								35.8	43.5	43.5	43.5	
					M_N								33.0	33.0	33.0	33.0	
					$M_{0,max}$								66.0	86.4	86.4	86.4	
					M_{max}								86.4	86.4	86.4	86.4	
					n_{eto}								-	-	-	-	
19F12-	38.0	1200	11.3	4.80	M_0				23.6	34.9	41.5	41.5	41.5				
					M_N				22.9	31.9	38.0	38.0	38.0				
					$M_{0,max}$				45.9	56.7	68.3	68.3	68.3				
					M_{max}				45.9	56.7	77.6	86.0	86.0				
					n_{eto}				-	-	-	-	-				
19F29-	32.5	2850	20.1	9.70	M_0								39.9	41.5			
					M_N								32.5	32.5			
					$M_{0,max}$								47.2	47.2			
					M_{max}								68.3	68.3			
					n_{eto}								-	-			
19J12-	62.5	1200	18.3	7.90	M_0						43.6		70.5	70.5			
					M_N						43.4		62.5	62.5			
					$M_{0,max}$						81.1		96.0	96.0			
					M_{max}						81.1		129.0	129.0			
					n_{eto}						-		-	-			
19J29-	50.5	2850	31.0	15.10	M_0									55.5	70.5	70.5	70.5
					M_N									50.5	50.5	50.5	50.5
					$M_{0,max}$									87.6	87.6	87.6	87.6
					M_{max}									127.6	127.6	127.6	127.6
					n_{eto}									-	-	-	-

► I... [A], M... [Nm], n... [r/min], P... [kW]



Selection tables, Inverter Drives 8400 TopLine

Forced ventilated IP54 motors

► The data applies to a mains connection voltage of 3 x 400 V and an inverter switching frequency of 8 kHz.

					E84AVTC	□1124	□1524	□2224	□3024	□4024	□5524	□7524	□1134	□1534	□1834	□2234	□3034
					I_N	3.2	3.9	5.9	7.3	9.5	13.0	16.5	23.5	32.0	39.0	47.0	61.0
					$I_{0,max}$	4.8	5.9	8.4	11.0	14.3	19.5	26.4	32.9	43.2	60.0	70.5	91.5
MCS	**M_N**	**n_N**	**I_N**	**P_N**	I_{max}	6.4	7.8	11.8	14.6	19.0	26.0	33.0	47.0	64.0	78.0	94.0	122.0
19P12-	72.0	1200	21.3	9.00	M_0						47.5		86.0	86.0			
					M_N						46.4		72.0	72.0			
					$M_{0,max}$						92.7		106.7	106.7			
					M_{max}						92.7		155.5	155.5			
					n_{eto}						-		-	-			
19P29-	53.0	2850	29.5	15.80	M_0									58.7	86.0	86.0	86.0
					M_N									53.0	53.0	53.0	53.0
					$M_{0,max}$									87.6	87.6	87.6	87.6
					M_{max}									144.3	144.3	144.3	144.3
					n_{eto}									-	-	-	-

► I... [A], M... [Nm], n... [r/min], P... [kW]



Selection tables, Servo Drives ECS

Non-ventilated motors

► The data applies to a mains connection voltage of 3 x 400 V and an inverter switching frequency of 4 kHz.

					ECS□□	004C□B	008C□B	016C□B	032C□B	048C□B	064C□B
					I_N	2.0	4.0	8.0	12.7	17.0	20.0
					$I_{0,max}$	2.3	4.6	9.1	18.1	27.2	36.3
MCS	**M_N**	**n_N**	**I_N**	**P_N**	I_{max}	4.0	8.0	16.0	32.0	48.0	64.0
06C41-	0.6	4050	1.3	0.25	M_0	0.8					
					M_N	0.6					
					$M_{0,max}$	1.2					
					M_{max}	1.9					
					n_{eto}	2747					
06C60-	0.5	6000	2.4	0.31	M_0	0.6	0.8				
					M_N	0.4	0.5				
					$M_{0,max}$	0.6	1.2				
					M_{max}	1.0	1.9				
					n_{eto}	7000	6814				
06F41-	1.2	4050	1.5	0.51	M_0	1.5					
					M_N	1.2					
					$M_{0,max}$	2.0					
					M_{max}	3.6					
					n_{eto}	1902					
06F60-	0.9	6000	2.5	0.57	M_0	1.0	1.5				
					M_N	0.7	0.9				
					$M_{0,max}$	1.0	2.0				
					M_{max}	1.8	3.7				
					n_{eto}	7000	4602				
06I41-	1.5	4050	1.6	0.64	M_0	2.0	2.0				
					M_N	1.5	1.5				
					$M_{0,max}$	2.6	5.0				
					M_{max}	4.4	6.2				
					n_{eto}	1898	1384				
06I60-	1.2	6000	2.9	0.75	M_0	1.2	2.0	2.0			
					M_N	0.8	1.2	1.2			
					$M_{0,max}$	1.3	2.6	5.2			
					M_{max}	2.2	4.7	6.2			
					n_{eto}	6407	4200	3157			
09D41-	2.3	4050	2.3	1.00	M_0		3.3	3.3			
					M_N		2.3	2.3			
					$M_{0,max}$		5.0	8.8			
					M_{max}		8.0	9.4			
					n_{eto}		2361	2008			
09D60-	1.8	6000	3.8	1.10	M_0		2.5	3.3			
					M_N		1.8	1.8			
					$M_{0,max}$		2.5	4.9			
					M_{max}		4.4	8.0			
					n_{eto}		7000	5217			
09F38-	3.1	3750	2.5	1.20	M_0		4.2	4.2			
					M_N		3.1	3.1			
					$M_{0,max}$		6.2	10.8			
					M_{max}		9.8	14.9			
					n_{eto}		2589	1737			

► I... [A], M... [Nm], n... [r/min], P... [kW]



Selection tables, Servo Drives ECS

Non-ventilated motors

► The data applies to a mains connection voltage of 3 x 400 V and an inverter switching frequency of 4 kHz.

					ECS□□	004C□B	008C□B	016C□B	032C□B	048C□B	064C□B
					I_N	2.0	4.0	8.0	12.7	17.0	20.0
					$I_{0,max}$	2.3	4.6	9.1	18.1	27.2	36.3
MCS	**M_N**	**n_N**	**I_N**	**P_N**	I_{max}	4.0	8.0	16.0	32.0	48.0	64.0
09F60-	2.4	6000	4.5	1.50	M_0		2.8	4.2	4.2		
					M_N		2.1	2.4	2.4		
					$M_{0,max}$		3.2	6.1	10.8		
					M_{max}		5.4	9.8	14.9		
					n_{eto}		7000	5906	3715		
09H41-	3.8	4050	3.4	1.60	M_0		5.2	5.5			
					M_N		3.8	3.8			
					$M_{0,max}$		5.9	11.1			
					M_{max}		9.9	17.5			
					n_{eto}		3675	2231			
09H60-	3.0	6000	6.0	1.90	M_0			5.2	5.5	5.5	
					M_N			3.0	3.0	3.0	
					$M_{0,max}$			5.9	11.0	15.5	
					M_{max}			9.9	17.5	20.4	
					n_{eto}			7000	5061	4375	
09L41-	4.5	4050	4.2	1.90	M_0		4.8	7.5	7.5		
					M_N		4.3	4.5	4.5		
					$M_{0,max}$		5.2	10.3	19.5		
					M_{max}		9.1	17.4	31.9		
					n_{eto}		4450	3188	1878		
09L51-	3.6	5100	6.9	1.90	M_0			4.8	7.5	7.5	7.5
					M_N			3.6	3.6	3.6	3.6
					$M_{0,max}$			5.2	10.3	15.1	19.6
					M_{max}			9.1	17.5	25.1	31.9
					n_{eto}			7000	7000	5647	4076
12D20-	5.5	1950	2.6	1.10	M_0	4.7	6.4	6.4			
					M_N	4.2	5.5	5.5			
					$M_{0,max}$	4.6	9.1	17.0			
					M_{max}	8.0	15.3	17.7			
					n_{eto}	1730	1089	919			
12D41-	4.3	4050	4.5	1.80	M_0		4.7	6.4			
					M_N		3.8	4.3			
					$M_{0,max}$		4.6	8.8			
					M_{max}		7.8	14.7			
					n_{eto}		3902	2433			
12H15-	10.0	1500	3.8	1.60	M_0		11.2	11.4			
					M_N		10.0	10.0			
					$M_{0,max}$		11.9	22.6			
					M_{max}		20.1	29.0			
					n_{eto}		1220	918			
12H35-	7.5	3525	5.7	2.80	M_0		5.6	11.2	11.4		
					M_N		5.3	7.5	7.5		
					$M_{0,max}$		6.0	11.8	22.5		
					M_{max}		10.4	20.1	29.0		
					n_{eto}		3850	2838	2092		

► I... [A], M... [Nm], n... [r/min], P... [kW]



Selection tables, Servo Drives ECS

Non-ventilated motors

► The data applies to a mains connection voltage of 3 x 400 V and an inverter switching frequency of 4 kHz.

					ECS□□	004C□B	008C□B	016C□B	032C□B	048C□B	064C□B
					I_N	2.0	4.0	8.0	12.7	17.0	20.0
					$I_{0,max}$	2.3	4.6	9.1	18.1	27.2	36.3
MCS	M_N	n_N	I_N	P_N	I_{max}	4.0	8.0	16.0	32.0	48.0	64.0
12L20-	13.5	1950	5.9	2.80	M_0			15.0	15.0		
					M_N			13.5	13.5		
					$M_{0,max}$			21.4	39.4		
					M_{max}			35.5	56.4		
					n_{eto}			1324	863		
12L41-	11.0	4050	10.2	4.70	M_0			9.7	15.0	15.0	15.0
					M_N			8.6	11.0	11.0	11.0
					$M_{0,max}$			10.8	21.3	30.8	39.5
					M_{max}			19.0	35.5	49.6	56.4
					n_{eto}			4450	3013	2236	1907
14D15-	9.2	1500	4.5	1.45	M_0		8.8	11.0			
					M_N		8.2	9.2			
					$M_{0,max}$		9.6	17.9			
					M_{max}		15.9	28.3			
					n_{eto}		1141	689			
14D36-	7.5	3600	7.5	2.80	M_0			8.8	11.0		
					M_N			7.5	7.5		
					$M_{0,max}$			9.5	17.8		
					M_{max}			15.9	28.3		
					n_{eto}			2496	1614		
14H15-	16.0	1500	6.6	2.50	M_0			19.8	21.0		
					M_N			16.0	16.0		
					$M_{0,max}$			22.3	41.2		
					M_{max}			37.1	54.8		
					n_{eto}			920	667		
14H32-	14.0	3225	11.9	4.70	M_0				15.8	21.0	21.0
					M_N				14.0	14.0	14.0
					$M_{0,max}$				22.2	32.1	41.3
					M_{max}				37.1	51.9	54.8
					n_{eto}				1953	1471	1409
14L15-	23.0	1500	9.7	3.60	M_0			18.7	28.0	28.0	
					M_N			19.0	23.0	23.0	
					$M_{0,max}$			21.9	42.1	59.9	
					M_{max}			37.6	68.5	77.1	
					n_{eto}			1284	828	767	
14L32-	17.2	3225	15.0	5.80	M_0				14.8	19.8	23.3
					M_N				14.6	17.2	17.2
					$M_{0,max}$				21.8	32.4	42.2
					M_{max}				37.6	53.9	68.5
					n_{eto}				2801	2096	1757
14P14-	30.0	1350	10.8	4.20	M_0				37.0	37.0	37.0
					M_N				30.0	30.0	30.0
					$M_{0,max}$				49.1	70.0	88.4
					M_{max}				80.0	105.1	105.1
					n_{eto}				710	573	573

► I... [A], M... [Nm], n... [r/min], P... [kW]



Selection tables, Servo Drives ECS

Non-ventilated motors

► The data applies to a mains connection voltage of 3 x 400 V and an inverter switching frequency of 4 kHz.

					ECS□□	004C□B	008C□B	016C□B	032C□B	048C□B	064C□B
					I_N	2.0	4.0	8.0	12.7	17.0	20.0
					$I_{0,max}$	2.3	4.6	9.1	18.1	27.2	36.3
MCS	**M_N**	**n_N**	**I_N**	**P_N**	I_{max}	4.0	8.0	16.0	32.0	48.0	64.0
14P32-	21.0	3225	15.6	7.10	M_0				19.3	25.9	30.5
					M_N				17.1	21.0	21.0
					$M_{0,max}$				25.4	37.9	49.3
					M_{max}				43.9	63.0	80.0
					n_{eto}				2469	1829	1495
19F14-	27.0	1425	8.6	4.00	M_0			25.9	32.0		
					M_N			25.1	27.0		
					$M_{0,max}$			28.6	54.6		
					M_{max}			48.9	86.0		
					n_{eto}			1204	746		
19F30-	21.0	3000	14.0	6.60	M_0				20.5	27.5	32.0
					M_N				19.0	21.0	21.0
					$M_{0,max}$				27.2	40.5	53.0
					M_{max}				47.2	68.3	86.0
					n_{eto}				2774	2033	1653
19J14-	40.0	1425	12.3	6.00	M_0				42.6	51.0	
					M_N				40.0	40.0	
					$M_{0,max}$				58.9	82.8	
					M_{max}				96.0	129.0	
					n_{eto}				1063	839	
19J30-	29.0	3000	18.5	9.10	M_0					28.4	33.4
					M_N					26.6	29.0
					$M_{0,max}$					42.6	56.9
					M_{max}					73.8	96.0
					n_{eto}					2850	2323
19P14-	51.0	1350	14.3	7.20	M_0				46.4	62.2	64.0
					M_N				45.3	51.0	51.0
					$M_{0,max}$				64.6	91.5	120.1
					M_{max}				106.7	155.5	190.0
					n_{eto}				1227	996	870
19P30-	32.0	3000	19.0	10.00	M_0					31.2	36.7
					M_N					28.6	32.0
					$M_{0,max}$					45.8	61.1
					M_{max}					81.2	106.7
					n_{eto}					2938	2715

► I... [A], M... [Nm], n... [r/min], P... [kW]



Selection tables, Servo Drives ECS

Non-ventilated motors

► The data applies to a mains connection voltage of 3x230V and an inverter switching frequency of 4 kHz.

					ECS□□	004C□B	008C□B	016C□B	032C□B	048C□B	064C□B
					I_N	2.0	4.0	8.0	12.7	17.0	20.0
					$I_{0,max}$	2.3	4.6	9.1	18.1	27.2	36.3
MCS	**M_N**	**n_N**	**I_N**	**P_N**	I_{max}	4.0	8.0	16.0	32.0	48.0	64.0
06C41L	0.6	4050	2.6	0.25	M_0	0.6	0.8				
					M_N	0.5	0.6				
					$M_{0,max}$	0.6	1.1				
					M_{max}	1.0	1.9				
					n_{eto}	6298	2835				
06C60L	0.5	6000	4.0	0.31	M_0		0.7	0.8			
					M_N		0.5	0.5			
					$M_{0,max}$		0.7	1.3			
					M_{max}		1.2	2.2			
					n_{eto}		7000	1149			
06F41L	1.2	4050	2.9	0.51	M_0	1.0	1.5	1.5			
					M_N	0.8	1.2	1.2			
					$M_{0,max}$	1.2	2.1	3.9			
					M_{max}	1.9	3.5	4.4			
					n_{eto}	3838	2118	2831			
06F60L	0.9	6000	3.8	0.57	M_0		1.5	1.5			
					M_N		0.9	0.9			
					$M_{0,max}$		1.5	2.9			
					M_{max}		2.6	4.3			
					n_{eto}		6138	3182			
06I41L	1.5	4050	3.2	0.64	M_0	1.3	2.0	2.0			
					M_N	1.0	1.5	1.5			
					$M_{0,max}$	1.4	2.8	5.0			
					M_{max}	2.4	4.4	6.2			
					n_{eto}	3549	1947	2831			
06I60L	1.2	6000	3.8	0.75	M_0		1.9	2.0			
					M_N		1.2	1.2			
					$M_{0,max}$		2.1	4.1			
					M_{max}		3.6	6.2			
					n_{eto}		3417	1149			
09D41L	2.3	4050	4.6	1.00	M_0		2.5	3.3	3.3		
					M_N		2.0	2.3	2.3		
					$M_{0,max}$		2.5	4.9	8.8		
					M_{max}		4.4	8.0	9.5		
					n_{eto}		4091	2547	2170		
09D60L	1.8	6000	7.0	1.10	M_0			2.6	3.3	3.3	
					M_N			1.8	1.8	1.8	
					$M_{0,max}$			2.6	5.0	7.1	
					M_{max}			4.5	8.1	9.5	
					n_{eto}			7000	5373	4626	
09F38L	3.1	3750	5.0	1.20	M_0			4.2	4.2		
					M_N			3.1	3.1		
					$M_{0,max}$			6.1	10.8		
					M_{max}			9.8	15.0		
					n_{eto}			1149	1951		

► I... [A], M... [Nm], n... [r/min], P... [kW]



Selection tables, Servo Drives ECS

Non-ventilated motors

► The data applies to a mains connection voltage of 3x230V and an inverter switching frequency of 4 kHz.

					ECS□□	004C□B	008C□B	016C□B	032C□B	048C□B	064C□B
					I_N	2.0	4.0	8.0	12.7	17.0	20.0
					$I_{0,max}$	2.3	4.6	9.1	18.1	27.2	36.3
MCS	**M_N**	**n_N**	**I_N**	**P_N**	I_{max}	4.0	8.0	16.0	32.0	48.0	64.0
09F60L	2.4	6000	7.9	1.50	M_0			3.2	4.2	4.2	4.2
					M_N			2.4	2.4	2.4	2.4
					$M_{0,max}$			3.6	6.8	9.6	11.9
					M_{max}			6.1	10.9	14.3	15.0
					n_{eto}			6985	3448	2612	2397
09H41L	3.8	4050	6.8	1.60	M_0			5.2	5.5	5.5	
					M_N			3.8	3.8	3.8	
					$M_{0,max}$			5.9	11.0	15.3	
					M_{max}			9.9	17.2	20.0	
					n_{eto}			1149	2138	1852	
09H60L	3.0	6000	8.0	1.90	M_0			3.7	5.5	5.5	5.5
					M_N			3.0	3.0	3.0	3.0
					$M_{0,max}$			4.1	8.0	11.5	14.5
					M_{max}			7.2	13.2	17.9	20.0
					n_{eto}			1149	4081	2984	2695
09L41L	4.5	4050	8.4	1.90	M_0			4.8	7.5	7.5	7.5
					M_N			4.3	4.5	4.5	4.5
					$M_{0,max}$			5.2	10.3	15.1	19.6
					M_{max}			9.1	17.5	25.1	31.9
					n_{eto}			4562	3243	2497	1909
12D20L	5.5	1950	5.2	1.10	M_0		4.7	6.4			
					M_N		4.2	5.5			
					$M_{0,max}$		4.6	9.0			
					M_{max}		8.0	14.9			
					n_{eto}		1878	1181			
12D41L	4.3	4050	8.8	1.80	M_0			4.8	6.4	6.4	
					M_N			3.9	4.3	4.3	
					$M_{0,max}$			4.6	9.2	13.3	
					M_{max}			8.1	15.2	17.9	
					n_{eto}			4102	2535	2187	
12H15L	10.0	1500	7.6	1.60	M_0			11.2	11.4		
					M_N			10.0	10.0		
					$M_{0,max}$			11.8	22.5		
					M_{max}			20.1	29.0		
					n_{eto}			1098	827		
12H30L	8.0	3000	10.5	2.50	M_0			6.8	10.7	11.4	
					M_N			6.1	8.0	8.0	
					$M_{0,max}$			7.2	14.3	20.9	
					M_{max}			12.7	24.3	29.0	
					n_{eto}			2831	1849	1591	
12L20L	13.5	1950	11.8	2.80	M_0				15.0	15.0	15.0
					M_N				13.5	13.5	13.5
					$M_{0,max}$				21.3	30.7	39.4
					M_{max}				35.4	49.3	56.0
					n_{eto}				1307	1004	866

► I... [A], M... [Nm], n... [r/min], P... [kW]



Selection tables, Servo Drives ECS

Forced ventilated IP54 motors

► The data applies to a mains connection voltage of 3 x 400 V and an inverter switching frequency of 4 kHz.

					ECS□□	004C□B	008C□B	016C□B	032C□B	048C□B	064C□B
					I_N	2.0	4.0	8.0	12.7	17.0	20.0
					$I_{0,max}$	2.3	4.6	9.1	18.1	27.2	36.3
MCS	M_N	n_N	I_N	P_N	I_{max}	4.0	8.0	16.0	32.0	48.0	64.0
12D17-	7.0	1650	3.0	1.20	M_0	4.7	7.5	7.5			
					M_N	4.2	7.0	7.0			
					$M_{0,max}$	4.6	9.1	17.0			
					M_{max}	8.0	15.3	17.7			
					n_{eto}	1730	1089	919			
12D35-	6.0	3525	5.6	2.20	M_0		4.7	7.5			
					M_N		3.8	6.0			
					$M_{0,max}$		4.6	8.8			
					M_{max}		7.8	14.7			
					n_{eto}		3902	2433			
12H14-	12.0	1350	4.1	1.70	M_0		11.2	12.8			
					M_N		10.6	12.0			
					$M_{0,max}$		11.9	22.6			
					M_{max}		20.1	29.0			
					n_{eto}		1220	918			
12H34-	10.5	3375	7.5	3.70	M_0		5.6	11.2	12.8		
					M_N		5.3	10.0	7.5		
					$M_{0,max}$		6.0	11.8	22.5		
					M_{max}		10.4	20.1	29.0		
					n_{eto}		3850	2838	2092		
12L17-	17.0	1650	6.7	2.90	M_0			19.0	19.0		
					M_N			17.0	17.0		
					$M_{0,max}$			21.4	39.4		
					M_{max}			35.5	56.4		
					n_{eto}			1324	863		
12L39-	14.0	3900	11.7	5.70	M_0			9.7	16.7	19.0	19.0
					M_N			8.6	14.0	14.0	14.0
					$M_{0,max}$			10.8	21.3	30.8	39.5
					M_{max}			19.0	35.5	49.6	56.4
					n_{eto}			4450	3013	2236	1907
14D14-	12.0	1350	5.4	1.70	M_0		8.8	12.5			
					M_N		8.2	12.0			
					$M_{0,max}$		9.6	17.9			
					M_{max}		15.9	28.3			
					n_{eto}		1141	689			
14D30-	10.5	3000	9.7	3.30	M_0			8.8	11.4		
					M_N			8.6	9.7		
					$M_{0,max}$			9.5	17.8		
					M_{max}			15.9	28.3		
					n_{eto}			2496	1614		
14H12-	23.5	1200	8.3	3.00	M_0			19.8	25.5		
					M_N			19.6	23.5		
					$M_{0,max}$			22.3	41.2		
					M_{max}			37.1	54.8		
					n_{eto}			920	667		

► I... [A], M... [Nm], n... [r/min], P... [kW]



Selection tables, Servo Drives ECS

Forced ventilated IP54 motors

► The data applies to a mains connection voltage of 3 x 400 V and an inverter switching frequency of 4 kHz.

					ECS□□	004C□B	008C□B	016C□B	032C□B	048C□B	064C□B
					I_N	2.0	4.0	8.0	12.7	17.0	20.0
					$I_{0,max}$	2.3	4.6	9.1	18.1	27.2	36.3
MCS	M_N	n_N	I_N	P_N	I_{max}	4.0	8.0	16.0	32.0	48.0	64.0
14H28-	20.5	2775	15.0	6.00	M_0				15.8	23.5	25.5
					M_N				15.6	20.5	20.5
					$M_{0,max}$				22.2	32.1	41.3
					M_{max}				37.1	51.9	54.8
					n_{eto}				1953	1471	1409
14L14-	30.5	1350	11.8	4.30	M_0			18.7	32.7	34.5	
					M_N			19.0	30.5	30.5	
					$M_{0,max}$			21.9	42.1	59.9	
					M_{max}			37.6	68.5	77.1	
					n_{eto}			1284	828	767	
14L30-	25.5	3000	20.8	8.00	M_0					19.8	23.3
					M_N					19.7	23.3
					$M_{0,max}$					32.4	42.2
					M_{max}					53.9	68.5
					n_{eto}					2096	1757
14P11-	42.0	1050	13.4	4.60	M_0				39.1	43.5	43.5
					M_N				38.9	42.0	42.0
					$M_{0,max}$				49.1	70.0	88.4
					M_{max}				80.0	105.1	105.1
					n_{eto}				710	573	573
14P26-	33.0	2625	21.9	9.10	M_0					25.9	30.5
					M_N					25.6	30.1
					$M_{0,max}$					37.9	49.3
					M_{max}					63.0	80.0
					n_{eto}					1829	1495
19F12-	38.0	1200	11.3	4.80	M_0			25.9	41.5		
					M_N			25.1	38.0		
					$M_{0,max}$			28.6	54.6		
					M_{max}			48.9	86.0		
					n_{eto}			1204	746		
19F29-	32.5	2850	20.1	9.70	M_0					27.5	33.9
					M_N					27.4	32.5
					$M_{0,max}$					40.5	53.0
					M_{max}					68.3	86.0
					n_{eto}					2033	1653
19J12-	62.5	1200	18.3	7.90	M_0					59.0	69.4
					M_N					58.1	62.5
					$M_{0,max}$					82.8	82.8
					M_{max}					129.0	129.0
					n_{eto}					839	839
19J29-	50.5	2850	31.0	15.10	M_0						34.3
					M_N						32.6
					$M_{0,max}$						56.9
					M_{max}						96.0
					n_{eto}						2323

► I... [A], M... [Nm], n... [r/min], P... [kW]



Selection tables, Servo Drives ECS

Forced ventilated IP54 motors

► The data applies to a mains connection voltage of 3 x 400 V and an inverter switching frequency of 4 kHz.

					ECS□□	004C□B	008C□B	016C□B	032C□B	048C□B	064C□B
					I_N	2.0	4.0	8.0	12.7	17.0	20.0
					$I_{0,max}$	2.3	4.6	9.1	18.1	27.2	36.3
MCS	**M_N**	**n_N**	**I_N**	**P_N**	I_{max}	4.0	8.0	16.0	32.0	48.0	64.0
19P12-	72.0	1200	21.3	9.00	M_0					62.2	76.8
					M_N					57.5	67.6
					$M_{0,max}$					91.5	120.1
					M_{max}					155.5	190.0
					n_{eto}					996	870
19P29-	53.0	2850	29.5	15.80	M_0						36.7
					M_N						35.9
					$M_{0,max}$						61.1
					M_{max}						106.7
					n_{eto}						2715

► I... [A], M... [Nm], n... [r/min], P... [kW]



Selection tables, Servo Inverter 9300

Non-ventilated motors

► The data applies to a mains connection voltage of 3 x 400 V and an inverter switching frequency of 8 kHz.

					EVS	9321-E□	9322-E□	9323-E□	9324-E□	9325-E□	9326-E□	9327-E□	9328-E□	9329-E□
					I_N	1.5	2.5	3.9	7.0	13.0	23.5	32.0	47.0	59.0
					$I_{0,max}$	2.3	3.8	5.9	10.5	19.5	23.5	32.0	47.0	52.0
MCS	M_N	n_N	I_N	P_N	I_{max}	2.3	3.8	5.9	10.5	19.5	35.3	48.0	70.5	88.5
06C41-	0.6	4050	1.3	0.25	M_0	0.8	0.8	0.8						
					M_N	0.6	0.6	0.6						
					$M_{0,max}$	1.2	1.8	2.4						
					M_{max}	1.2	1.8	2.4						
					n_{eto}	4635	2871	2019						
06C60-	0.5	6000	2.4	0.31	M_0		0.8	0.8	0.8					
					M_N		0.5	0.5	0.5					
					$M_{0,max}$		1.0	1.5	2.4					
					M_{max}		1.0	1.5	2.4					
					n_{eto}		7000	7000	5368					
06F41-	1.2	4050	1.5	0.51	M_0	1.5	1.5	1.5						
					M_N	1.2	1.2	1.2						
					$M_{0,max}$	2.0	3.4	4.4						
					M_{max}	2.0	3.4	4.4						
					n_{eto}	2819	1973	1562						
06F60-	0.9	6000	2.5	0.57	M_0		1.3	1.5	1.5					
					M_N		0.9	0.9	0.9					
					$M_{0,max}$		1.7	3.0	4.4					
					M_{max}		1.7	3.0	4.4					
					n_{eto}		7000	5714	3773					
06I41-	1.5	4050	1.6	0.64	M_0	1.8	2.0	2.0						
					M_N	1.4	1.5	1.5						
					$M_{0,max}$	2.6	4.2	6.2						
					M_{max}	2.6	4.2	6.2						
					n_{eto}	2994	1980	1384						
06I60-	1.2	6000	2.9	0.75	M_0		1.5	2.0	2.0					
					M_N		1.0	1.2	1.2					
					$M_{0,max}$		2.1	3.3	5.7					
					M_{max}		2.1	3.3	5.7					
					n_{eto}		7000	5486	3414					
09D41-	2.3	4050	2.3	1.00	M_0		3.1	3.3	3.3					
					M_N		2.3	2.3	2.3					
					$M_{0,max}$		4.2	6.2	9.4					
					M_{max}		4.2	6.2	9.4					
					n_{eto}		4895	2937	2008					
09D60-	1.8	6000	3.8	1.10	M_0			2.4	3.3	3.3				
					M_N			1.8	1.8	1.8				
					$M_{0,max}$			3.2	5.6	9.3				
					M_{max}			3.2	5.6	9.3				
					n_{eto}			7000	7000	4492				
09F38-	3.1	3750	2.5	1.20	M_0		3.5	4.2	4.2					
					M_N		3.1	3.1	3.1					
					$M_{0,max}$		5.2	7.7	12.0					
					M_{max}		5.2	7.7	12.0					
					n_{eto}		4000	3250	2173					

► I... [A], M... [Nm], n... [r/min], P... [kW]



Selection tables, Servo Inverter 9300

Non-ventilated motors

► The data applies to a mains connection voltage of 3 x 400 V and an inverter switching frequency of 8 kHz.

					EVS	9321-E□	9322-E□	9323-E□	9324-E□	9325-E□	9326-E□	9327-E□	9328-E□	9329-E□
					I_N	1.5	2.5	3.9	7.0	13.0	23.5	32.0	47.0	59.0
					$I_{0,max}$	2.3	3.8	5.9	10.5	19.5	23.5	32.0	47.0	52.0
MCS	M_N	n_N	I_N	P_N	I_{max}	2.3	3.8	5.9	10.5	19.5	35.3	48.0	70.5	88.5
09F60-	2.4	6000	4.5	1.50	M_0				4.2	4.2				
					M_N				2.4	2.4				
					$M_{0,max}$				6.9	11.4				
					M_{max}				6.9	11.4				
					n_{eto}				7000	5035				
09H41-	3.8	4050	3.4	1.60	M_0			5.0	5.5	5.5				
					M_N			3.8	3.8	3.8				
					$M_{0,max}$			7.5	12.5	20.1				
					M_{max}			7.5	12.5	20.1				
					n_{eto}			4250	2977	1988				
09H60-	3.0	6000	6.0	1.90	M_0				4.5	5.5				
					M_N				3.0	3.0				
					$M_{0,max}$				6.7	11.7				
					M_{max}				6.7	11.7				
					n_{eto}				7000	7000				
09L41-	4.5	4050	4.2	1.90	M_0			4.7	7.5	7.5				
					M_N			4.2	4.5	4.5				
					$M_{0,max}$			6.7	11.7	20.8				
					M_{max}			6.7	11.7	20.8				
					n_{eto}			4450	4154	2796				
09L51-	3.6	5100	6.9	1.90	M_0				4.2	7.5	7.5			
					M_N				3.6	3.6	3.6			
					$M_{0,max}$				6.0	11.1	13.2			
					M_{max}				6.0	11.1	19.1			
					n_{eto}				7000	7000	7000			
12D20-	5.5	1950	2.6	1.10	M_0		5.9	6.4	6.4					
					M_N		5.3	5.5	5.5					
					$M_{0,max}$		7.6	11.6	17.7					
					M_{max}		7.6	11.6	17.7					
					n_{eto}		1790	1358	919					
12D41-	4.3	4050	4.5	1.80	M_0			4.6	6.4	6.4				
					M_N			3.7	4.3	4.3				
					$M_{0,max}$			5.9	10.1	17.3				
					M_{max}			5.9	10.1	17.3				
					n_{eto}			4344	3275	2116				
12H15-	10.0	1500	3.8	1.60	M_0			10.9	11.4	11.4				
					M_N			10.0	10.0	10.0				
					$M_{0,max}$			15.1	25.8	29.0				
					M_{max}			15.1	25.8	29.0				
					n_{eto}			1676	1013	918				
12H35-	7.5	3525	5.7	2.80	M_0				9.8	11.4				
					M_N				7.5	7.5				
					$M_{0,max}$				13.5	24.1				
					M_{max}				13.5	24.1				
					n_{eto}				3618	2447				

► I... [A], M... [Nm], n... [r/min], P... [kW]



Selection tables, Servo Inverter 9300

Non-ventilated motors

► The data applies to a mains connection voltage of 3 x 400 V and an inverter switching frequency of 8 kHz.

					EVS	9321-E□	9322-E□	9323-E□	9324-E□	9325-E□	9326-E□	9327-E□	9328-E□	9329-E□
					I_N	1.5	2.5	3.9	7.0	13.0	23.5	32.0	47.0	59.0
					$I_{0,max}$	2.3	3.8	5.9	10.5	19.5	23.5	32.0	47.0	52.0
MCS	M_N	n_N	I_N	P_N	I_{max}	2.3	3.8	5.9	10.5	19.5	35.3	48.0	70.5	88.5
12L20-	13.5	1950	5.9	2.80	M_0				15.0	15.0				
					M_N				13.5	13.5				
					$M_{0,max}$				24.4	41.9				
					M_{max}				24.4	41.9				
					n_{eto}				1718	1158				
12L41-	11.0	4050	10.2	4.70	M_0					15.0	15.0	15.0		
					M_N					11.0	11.0	11.0		
					$M_{0,max}$					22.8	27.0	35.5		
					M_{max}					22.8	38.5	49.6		
					n_{eto}					4287	2799	2236		
14D15-	9.2	1500	4.5	1.45	M_0			8.5	11.0	11.0				
					M_N			8.0	9.2	9.2				
					$M_{0,max}$			12.1	20.2	29.0				
					M_{max}			12.1	20.2	29.0				
					n_{eto}			1437	928	676				
14D36-	7.5	3600	7.5	2.80	M_0				7.7	11.0	11.0			
					M_N				7.0	7.5	7.5			
					$M_{0,max}$				10.9	19.0	22.2			
					M_{max}				10.9	19.0	29.0			
					n_{eto}				3479	2159	1593			
14H15-	16.0	1500	6.6	2.50	M_0				17.3	21.0				
					M_N				16.0	16.0				
					$M_{0,max}$				25.4	43.9				
					M_{max}				25.4	43.9				
					n_{eto}				1247	800				
14H32-	14.0	3225	11.9	4.70	M_0					16.2	21.0	21.0		
					M_N					14.0	14.0	14.0		
					$M_{0,max}$					23.8	28.2	37.1		
					M_{max}					23.8	40.2	51.9		
					n_{eto}					2875	1817	1471		
14L15-	23.0	1500	9.7	3.60	M_0					28.0	28.0			
					M_N					23.0	23.0			
					$M_{0,max}$					45.0	52.9			
					M_{max}					45.0	73.8			
					n_{eto}					1126	788			
14L32-	17.2	3225	15.0	5.80	M_0					15.2	27.4	28.0	28.0	
					M_N					14.9	17.2	17.2	17.2	
					$M_{0,max}$					23.5	28.3	37.6	52.9	
					M_{max}					23.5	41.0	53.9	73.9	
					n_{eto}					3953	2608	2096	1672	
14P14-	30.0	1350	10.8	4.20	M_0					37.0	37.0	37.0		
					M_N					30.0	30.0	30.0		
					$M_{0,max}$					52.5	61.8	80.0		
					M_{max}					52.5	86.3	105.1		
					n_{eto}					998	668	573		

► I... [A], M... [Nm], n... [r/min], P... [kW]



Selection tables, Servo Inverter 9300

Non-ventilated motors

► The data applies to a mains connection voltage of 3 x 400 V and an inverter switching frequency of 8 kHz.

					EVS	9321-E□	9322-E□	9323-E□	9324-E□	9325-E□	9326-E□	9327-E□	9328-E□	9329-E□
					I_N	1.5	2.5	3.9	7.0	13.0	23.5	32.0	47.0	59.0
					$I_{0,max}$	2.3	3.8	5.9	10.5	19.5	23.5	32.0	47.0	52.0
MCS	**M_N**	**n_N**	**I_N**	**P_N**	I_{max}	2.3	3.8	5.9	10.5	19.5	35.3	48.0	70.5	88.5
14P32-	21.0	3225	15.6	7.10	M_0					19.8	35.8	37.0	37.0	
					M_N					17.5	21.0	21.0	21.0	
					$M_{0,max}$					27.4	33.0	43.9	61.8	
					M_{max}					27.4	47.9	63.0	86.4	
					n_{eto}					3300	2299	1829	1404	
19F14-	27.0	1425	8.6	4.00	M_0				22.6	32.0	32.0			
					M_N				22.0	27.0	27.0			
					$M_{0,max}$				33.0	58.2	68.3			
					M_{max}				33.0	58.2	86.0			
					n_{eto}				1459	1056	746			
19F30-	21.0	3000	14.0	6.60	M_0					21.0	32.0	32.0		
					M_N					19.5	21.0	21.0		
					$M_{0,max}$					29.2	35.2	47.2		
					M_{max}					29.2	51.5	68.3		
					n_{eto}					3352	2573	2033		
19J14-	40.0	1425	12.3	6.00	M_0					43.6	51.0	51.0		
					M_N					40.0	40.0	40.0		
					$M_{0,max}$					60.8	72.4	96.0		
					M_{max}					60.8	104.5	129.0		
					n_{eto}					1376	996	839		
19J30-	29.0	3000	18.5	9.10	M_0						39.3	51.0	51.0	51.0
					M_N						29.0	29.0	29.0	29.0
					$M_{0,max}$						36.8	50.2	72.4	79.5
					M_{max}						55.2	73.8	104.7	127.6
					n_{eto}						3150	2850	2162	1817
19P14-	51.0	1350	14.3	7.20	M_0					47.5	64.0	64.0		
					M_N					46.4	51.0	51.0		
					$M_{0,max}$					69.5	79.6	106.7		
					M_{max}					69.5	116.7	155.5		
					n_{eto}					1400	1187	996		
19P30-	32.0	3000	19.0	10.00	M_0						43.1	58.7	64.0	64.0
					M_N						32.0	32.0	32.0	32.0
					$M_{0,max}$						39.6	53.9	79.6	87.6
					M_{max}						59.3	81.2	116.9	144.3
					n_{eto}						3000	2938	2638	2298

► I... [A], M... [Nm], n... [r/min], P... [kW]



Selection tables, Servo Inverter 9300

Forced ventilated IP54 motors

► The data applies to a mains connection voltage of 3 x 400 V and an inverter switching frequency of 8 kHz.

					EVS	9322-E□	9323-E□	9324-E□	9325-E□	9326-E□	9327-E□	9328-E□	9329-E□
					I_N	2.5	3.9	7.0	13.0	23.5	32.0	47.0	59.0
					$I_{0,max}$	3.8	5.9	10.5	19.5	23.5	32.0	47.0	52.0
MCS	M_N	n_N	I_N	P_N	I_{max}	3.8	5.9	10.5	19.5	35.3	48.0	70.5	88.5
12D17-	7.0	1650	3.0	1.20	M_0	5.9	7.5	7.5					
					M_N	5.3	7.0	7.0					
					$M_{0,max}$	7.6	11.6	17.7					
					M_{max}	7.6	11.6	17.7					
					n_{eto}	1790	1358	919					
12D35-	6.0	3525	5.6	2.20	M_0		4.6	7.5	7.5				
					M_N		3.7	6.0	6.0				
					$M_{0,max}$		5.9	10.1	17.3				
					M_{max}		5.9	10.1	17.3				
					n_{eto}		4344	3275	2116				
12H14-	12.0	1350	4.1	1.70	M_0		10.9	12.8	12.8				
					M_N		10.3	12.0	12.0				
					$M_{0,max}$		15.1	25.8	29.0				
					M_{max}		15.1	25.8	29.0				
					n_{eto}		1676	1013	918				
12H34-	10.5	3375	7.5	3.70	M_0			9.8	12.8				
					M_N			9.6	10.5				
					$M_{0,max}$			13.5	24.1				
					M_{max}			13.5	24.1				
					n_{eto}			3618	2447				
12L17-	17.0	1650	6.7	2.90	M_0			18.5	19.0				
					M_N			17.0	17.0				
					$M_{0,max}$			24.4	41.9				
					M_{max}			24.4	41.9				
					n_{eto}			1718	1158				
12L39-	14.0	3900	11.7	5.70	M_0				17.2	19.0	19.0		
					M_N				14.0	14.0	14.0		
					$M_{0,max}$				22.8	27.0	35.5		
					M_{max}				22.8	38.5	49.6		
					n_{eto}				4287	2799	2236		
14D14-	12.0	1350	5.4	1.70	M_0		8.5	12.5	12.5				
					M_N		8.0	12.0	12.0				
					$M_{0,max}$		12.1	20.2	29.0				
					M_{max}		12.1	20.2	29.0				
					n_{eto}		1437	928	676				
14D30-	10.5	3000	9.7	3.30	M_0			7.7	12.5	12.5			
					M_N			7.0	10.0	10.0			
					$M_{0,max}$			10.9	19.0	22.2			
					M_{max}			10.9	19.0	29.0			
					n_{eto}			3479	2159	1593			
14H12-	23.5	1200	8.3	3.00	M_0			17.3	25.5				
					M_N			17.2	23.5				
					$M_{0,max}$			25.4	43.9				
					M_{max}			25.4	43.9				
					n_{eto}			1247	800				

► I... [A], M... [Nm], n... [r/min], P... [kW]



Selection tables, Servo Inverter 9300

Forced ventilated IP54 motors

► The data applies to a mains connection voltage of 3 x 400 V and an inverter switching frequency of 8 kHz.

					EVS	9322-E□	9323-E□	9324-E□	9325-E□	9326-E□	9327-E□	9328-E□	9329-E□
					I_N	2.5	3.9	7.0	13.0	23.5	32.0	47.0	59.0
					$I_{0,max}$	3.8	5.9	10.5	19.5	23.5	32.0	47.0	52.0
MCS	M_N	n_N	I_N	P_N	I_{max}	3.8	5.9	10.5	19.5	35.3	48.0	70.5	88.5
14H28-	20.5	2775	15.0	6.00	M_0				16.2	25.5	25.5		
					M_N				16.1	20.5	20.5		
					$M_{0,max}$				23.8	28.2	37.1		
					M_{max}				23.8	40.2	51.9		
					n_{eto}				2875	1817	1471		
14L14-	30.5	1350	11.8	4.30	M_0				33.4	34.5			
					M_N				30.5	30.5			
					$M_{0,max}$				45.0	52.9			
					M_{max}				45.0	73.8			
					n_{eto}				1126	788			
14L30-	25.5	3000	20.8	8.00	M_0					27.4	34.5	34.5	
					M_N					25.5	25.5	25.5	
					$M_{0,max}$					28.3	37.6	52.9	
					M_{max}					41.0	53.9	73.9	
					n_{eto}					2608	2096	1672	
14P11-	42.0	1050	13.4	4.60	M_0				40.1	43.5	43.5		
					M_N				40.0	42.0	42.0		
					$M_{0,max}$				52.5	61.8	80.0		
					M_{max}				52.5	86.3	105.1		
					n_{eto}				998	668	573		
14P26-	33.0	2625	21.9	9.10	M_0					35.8	43.5	43.5	
					M_N					33.0	33.0	33.0	
					$M_{0,max}$					33.0	43.9	61.8	
					M_{max}					47.9	63.0	86.4	
					n_{eto}					2299	1829	1404	
19F12-	38.0	1200	11.3	4.80	M_0			22.6	41.5	41.5			
					M_N			22.0	38.0	38.0			
					$M_{0,max}$			33.0	58.2	68.3			
					M_{max}			33.0	58.2	86.0			
					n_{eto}			1459	1056	746			
19F29-	32.5	2850	20.1	9.70	M_0					39.9	41.5		
					M_N					32.5	32.5		
					$M_{0,max}$					35.2	47.2		
					M_{max}					51.5	68.3		
					n_{eto}					2573	2033		
19J12-	62.5	1200	18.3	7.90	M_0				43.6	70.5	70.5		
					M_N				43.4	62.5	62.5		
					$M_{0,max}$				60.8	72.4	96.0		
					M_{max}				60.8	104.5	129.0		
					n_{eto}				1376	996	839		
19J29-	50.5	2850	31.0	15.10	M_0						55.5	70.5	70.5
					M_N						50.5	50.5	50.5
					$M_{0,max}$						50.2	72.4	79.5
					M_{max}						73.8	104.7	127.6
					n_{eto}						2850	2162	1817

► I... [A], M... [Nm], n... [r/min], P... [kW]



Selection tables, Servo Inverter 9300

Forced ventilated IP54 motors

► The data applies to a mains connection voltage of 3 x 400 V and an inverter switching frequency of 8 kHz.

					EVS	9322-E□	9323-E□	9324-E□	9325-E□	9326-E□	9327-E□	9328-E□	9329-E□
					I_N	2.5	3.9	7.0	13.0	23.5	32.0	47.0	59.0
					$I_{0,max}$	3.8	5.9	10.5	19.5	23.5	32.0	47.0	52.0
MCS	**M_N**	**n_N**	**I_N**	**P_N**	I_{max}	3.8	5.9	10.5	19.5	35.3	48.0	70.5	88.5
19P12-	72.0	1200	21.3	9.00	M_0				47.5	86.0	86.0		
					M_N				46.4	72.0	72.0		
					$M_{0,max}$				69.5	79.6	106.7		
					M_{max}				69.5	116.7	155.5		
					n_{eto}				1400	1187	996		
19P29-	53.0	2850	29.5	15.80	M_0						58.7	86.0	86.0
					M_N						53.0	53.0	53.0
					$M_{0,max}$						53.9	79.6	87.6
					M_{max}						81.2	116.9	144.3
					n_{eto}						2938	2638	2298

► I... [A], M... [Nm], n... [r/min], P... [kW]



Torque characteristics

- The data applies to a mains connection voltage of 3 x 400 V.
- You can find further torque characteristics at **www.lenze.de/dsc**.

MCS06C41- (non-ventilated)

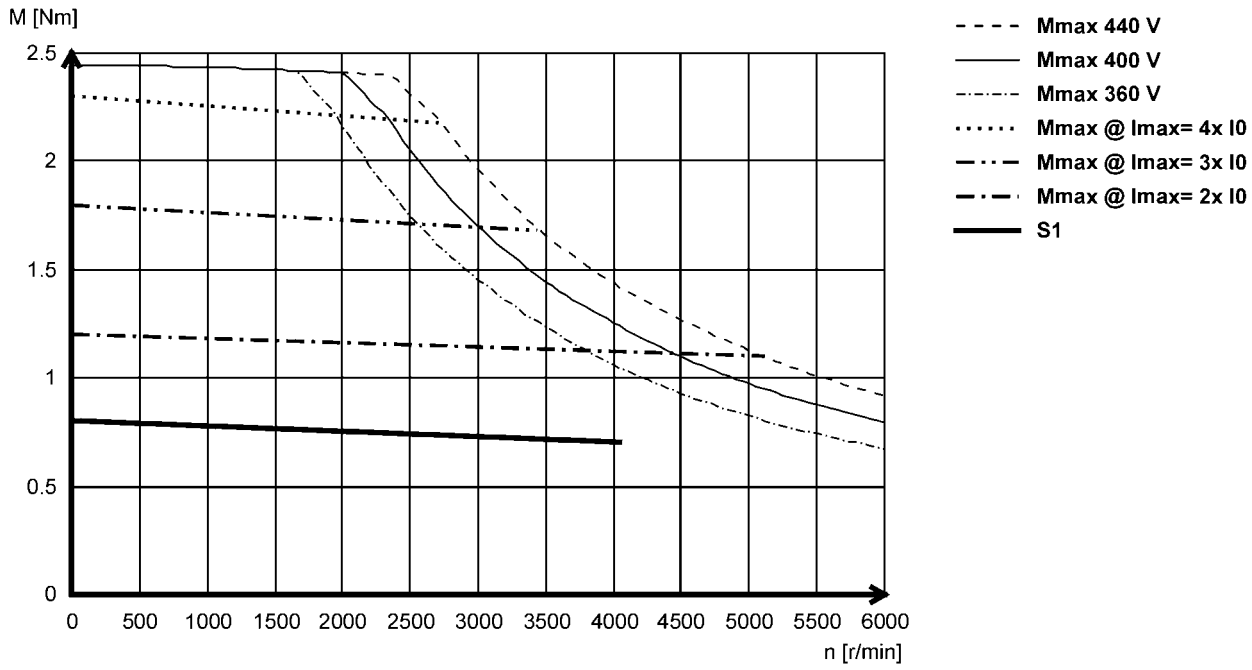

MCS06C60- (non-ventilated)

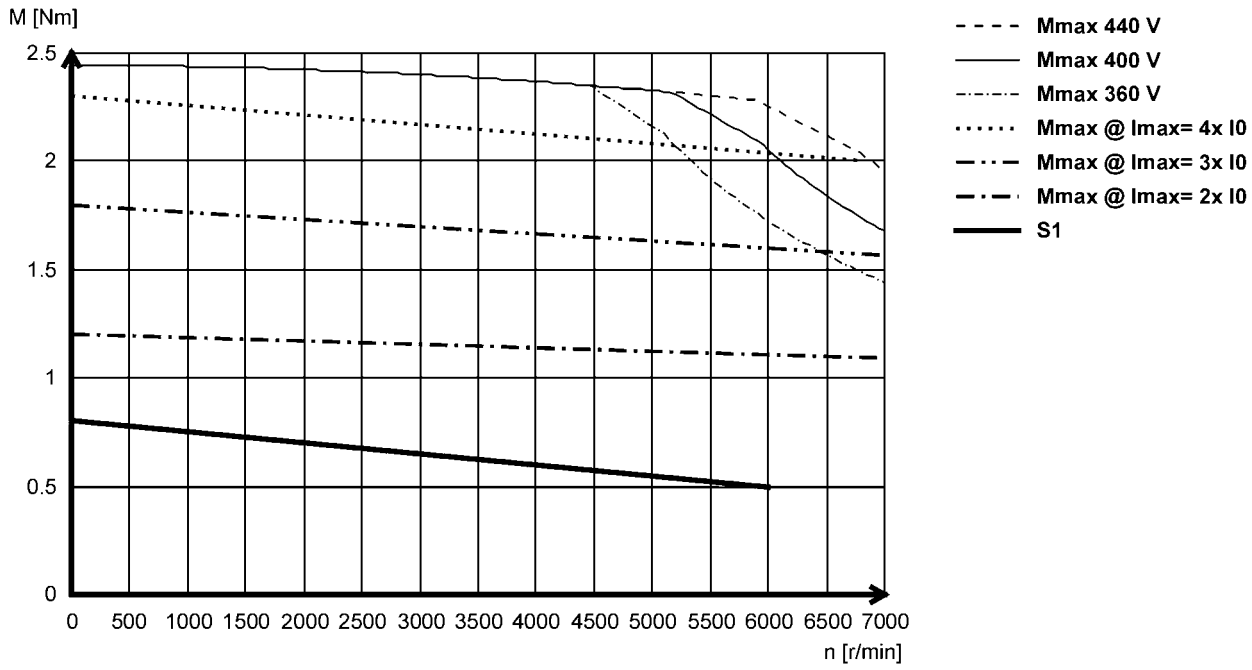



Torque characteristics

- The data applies to a mains connection voltage of 3 x 400 V.
- You can find further torque characteristics at **www.lenze.de/dsc**.

MCS06F41- (non-ventilated)

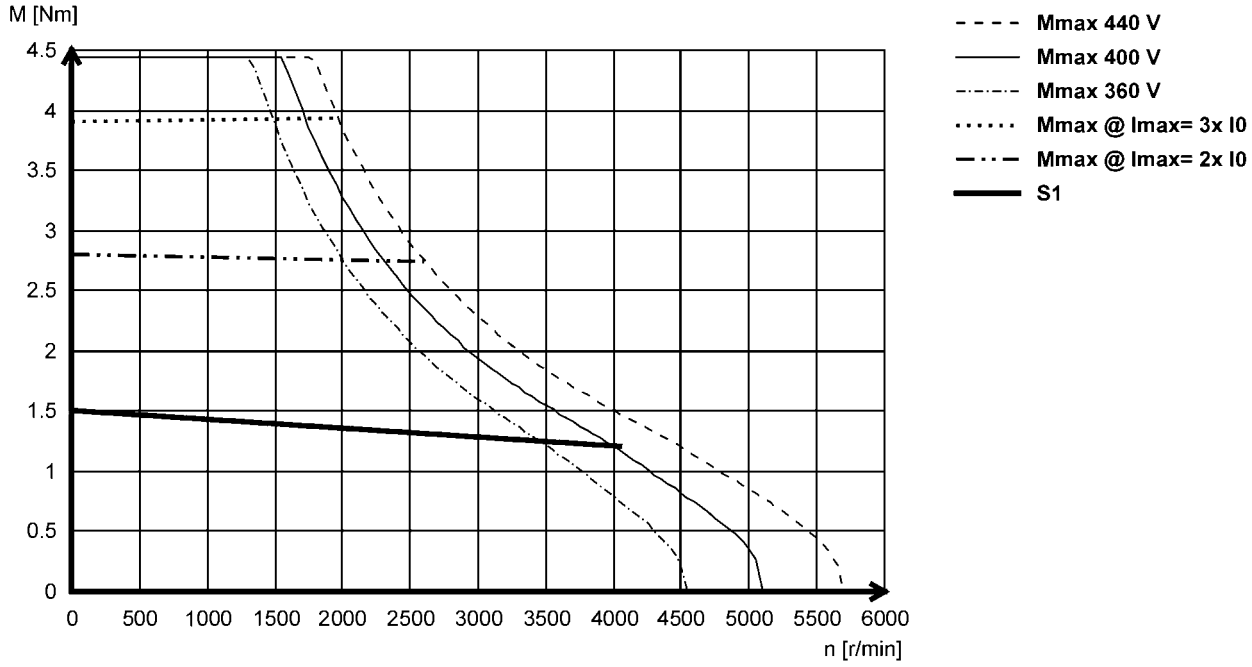

MCS06F60- (non-ventilated)

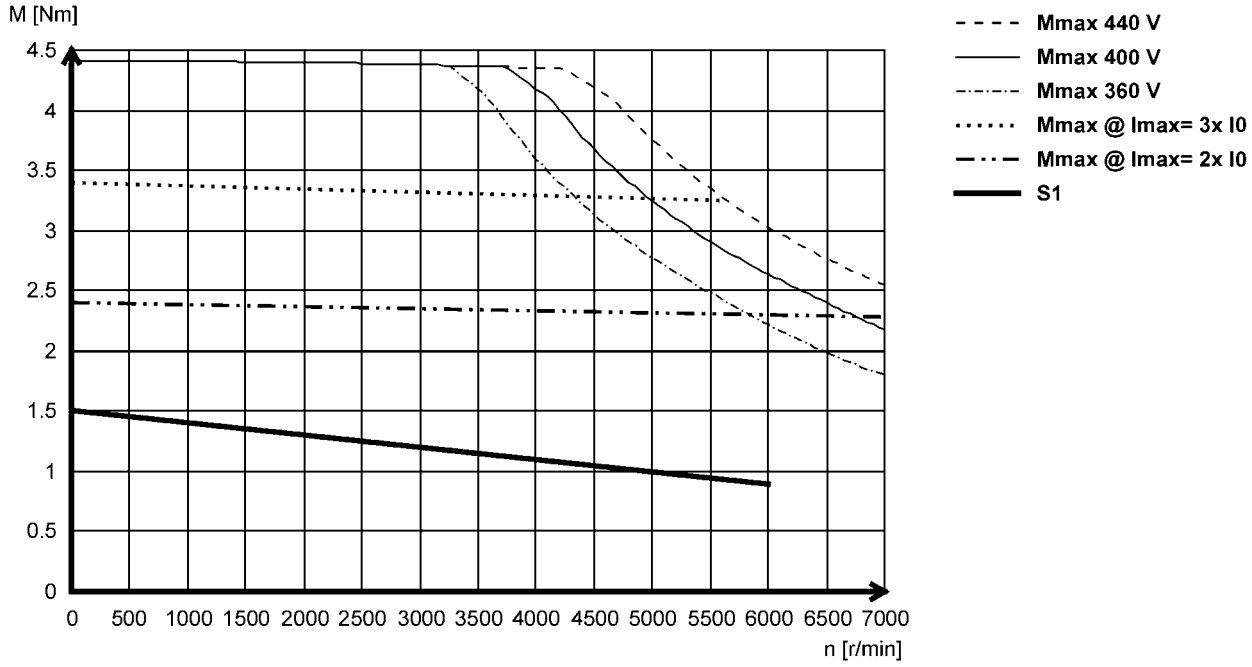



Torque characteristics

- The data applies to a mains connection voltage of 3 x 400 V.
- You can find further torque characteristics at **www.lenze.de/dsc**.

MCS06I41- (non-ventilated)

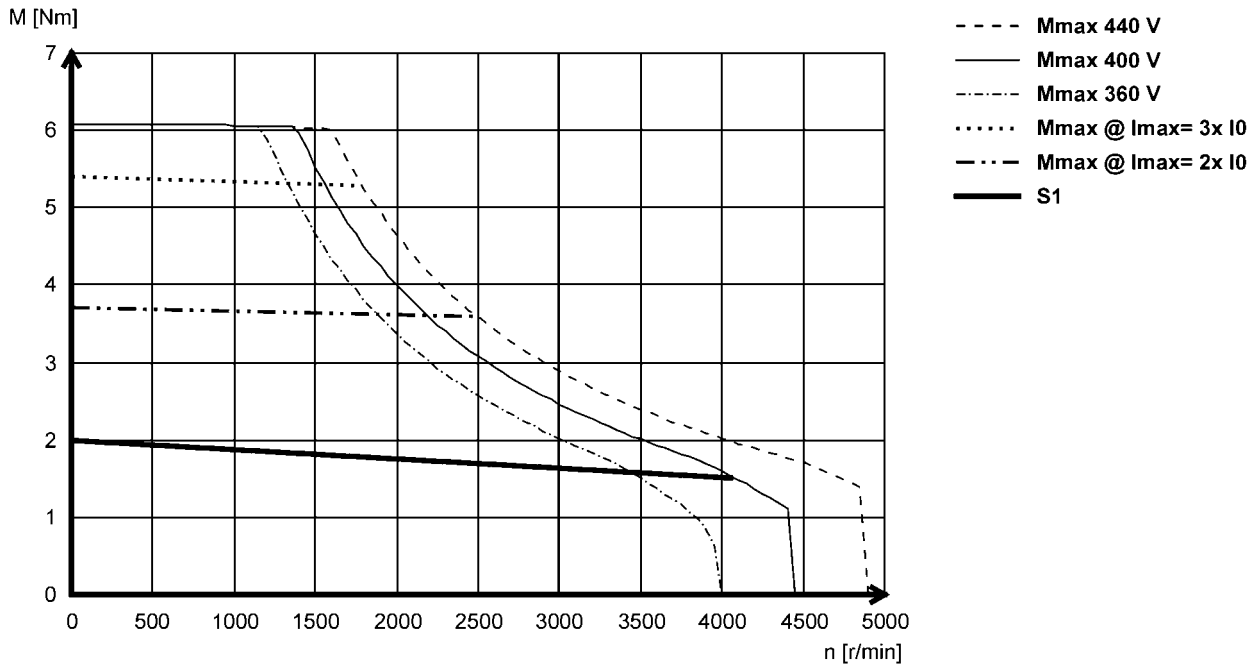

MCS06I60- (non-ventilated)

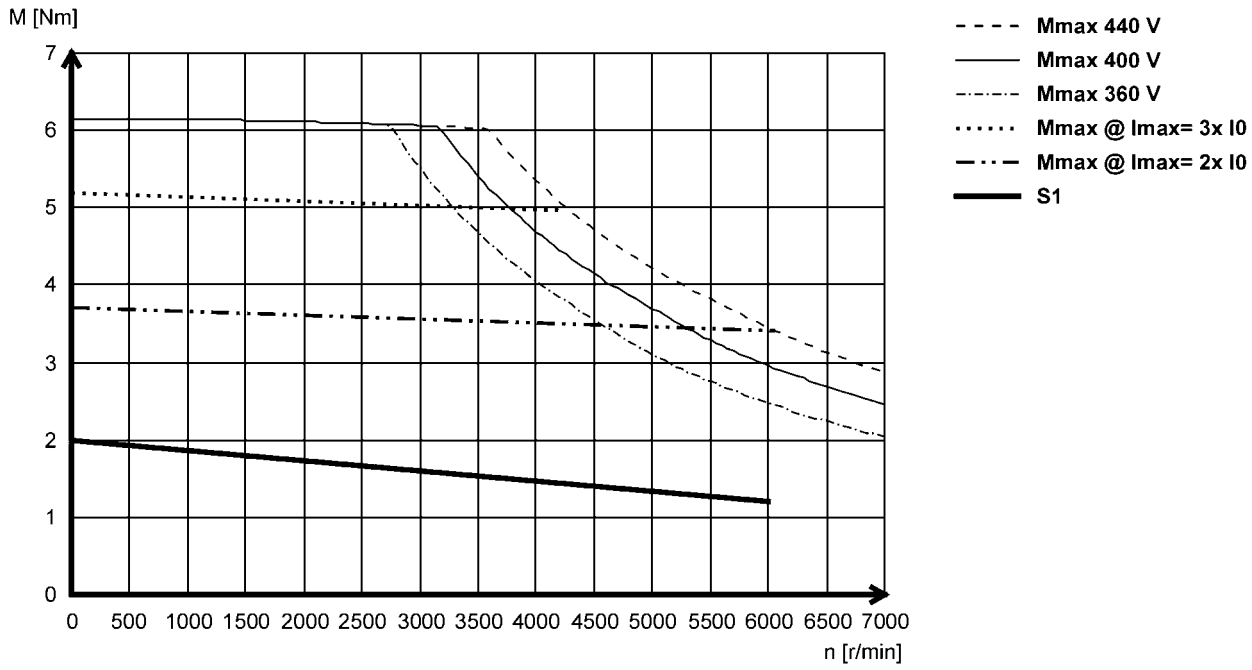



Torque characteristics

- The data applies to a mains connection voltage of 3 x 400 V.
- You can find further torque characteristics at **www.lenze.de/dsc**.

MCS09D41- (non-ventilated)

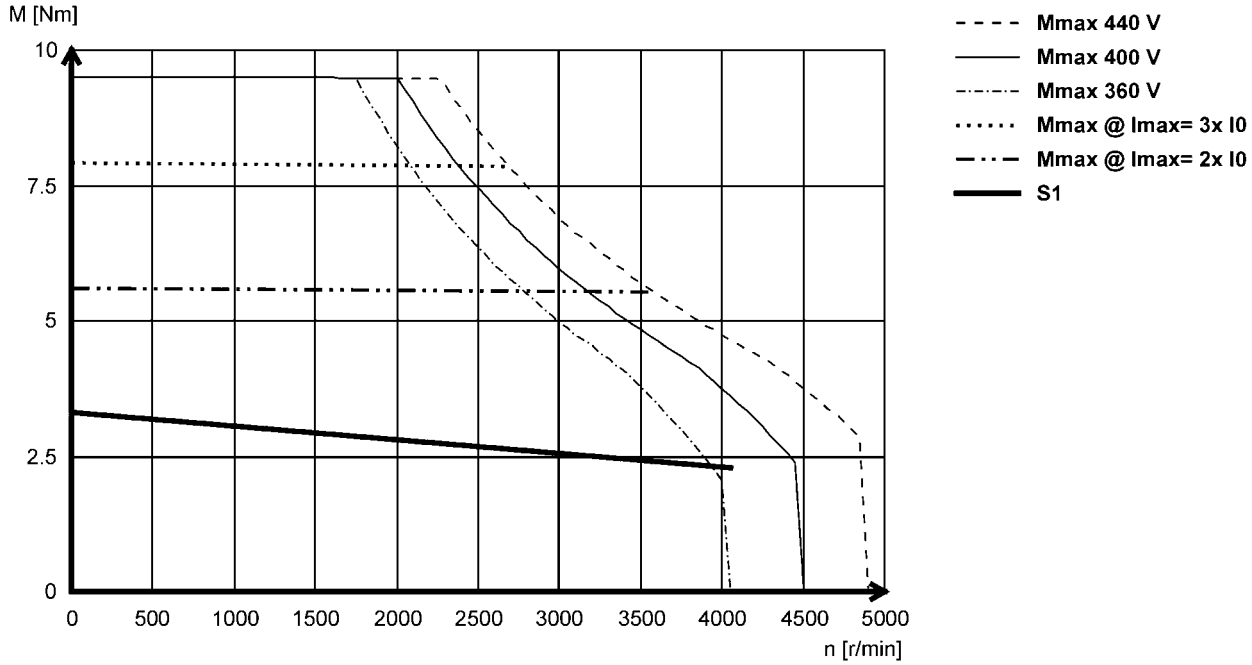

MCS09D60- (non-ventilated)

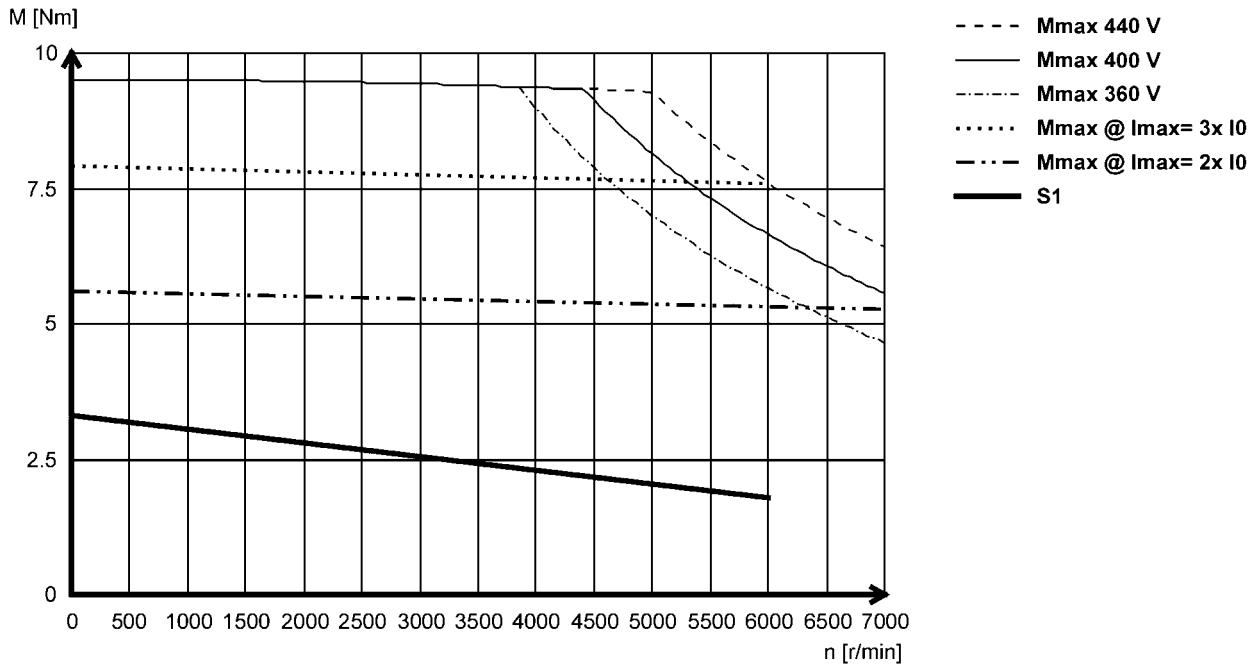



Torque characteristics

- The data applies to a mains connection voltage of 3 x 400 V.
- You can find further torque characteristics at **www.lenze.de/dsc**.

MCS09F38- (non-ventilated)

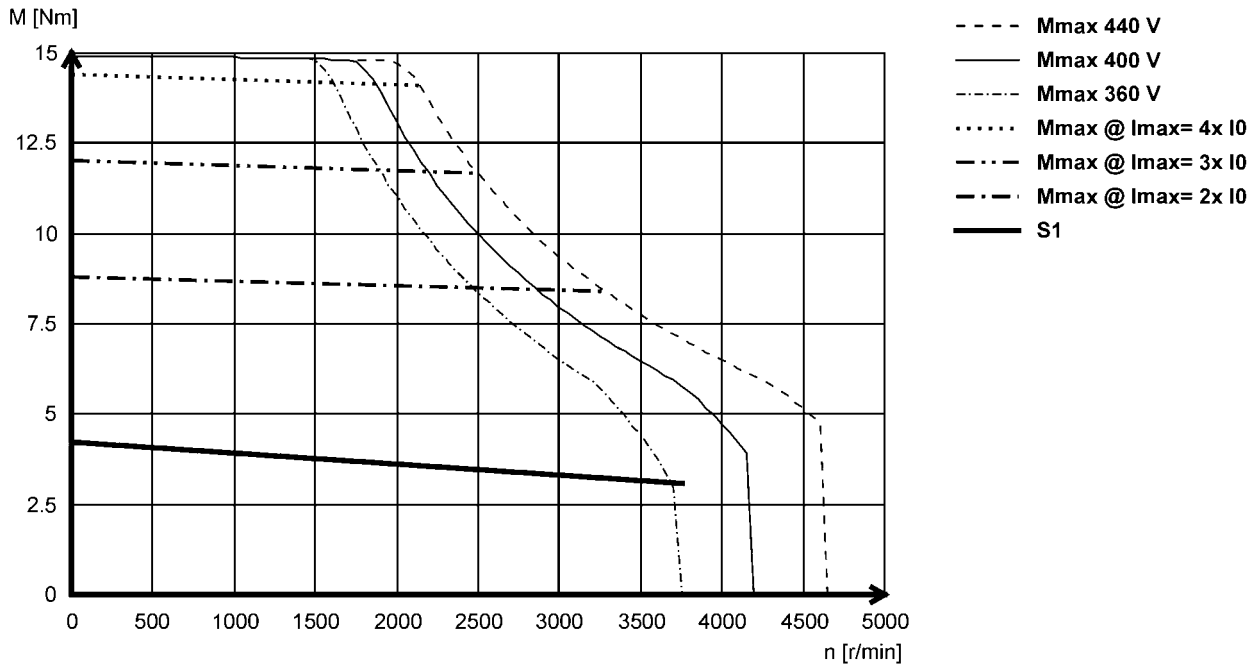

MCS09F60- (non-ventilated)

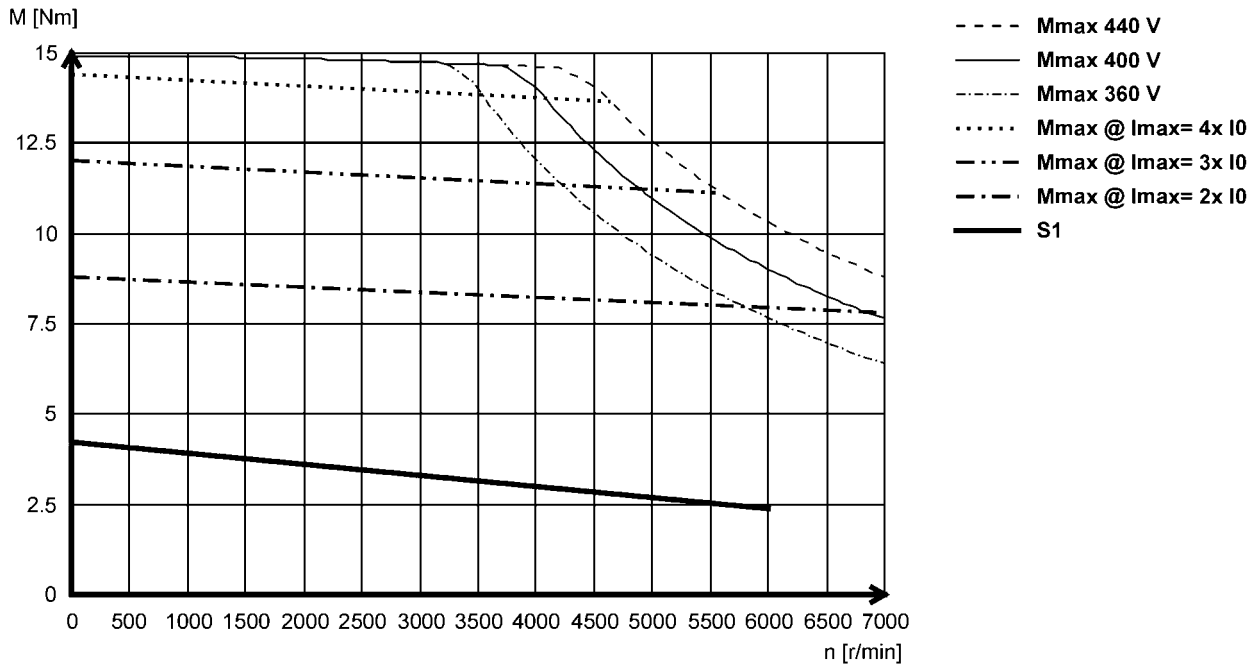



Torque characteristics

- The data applies to a mains connection voltage of 3 x 400 V.
- You can find further torque characteristics at **www.lenze.de/dsc**.

MCS09H41- (non-ventilated)

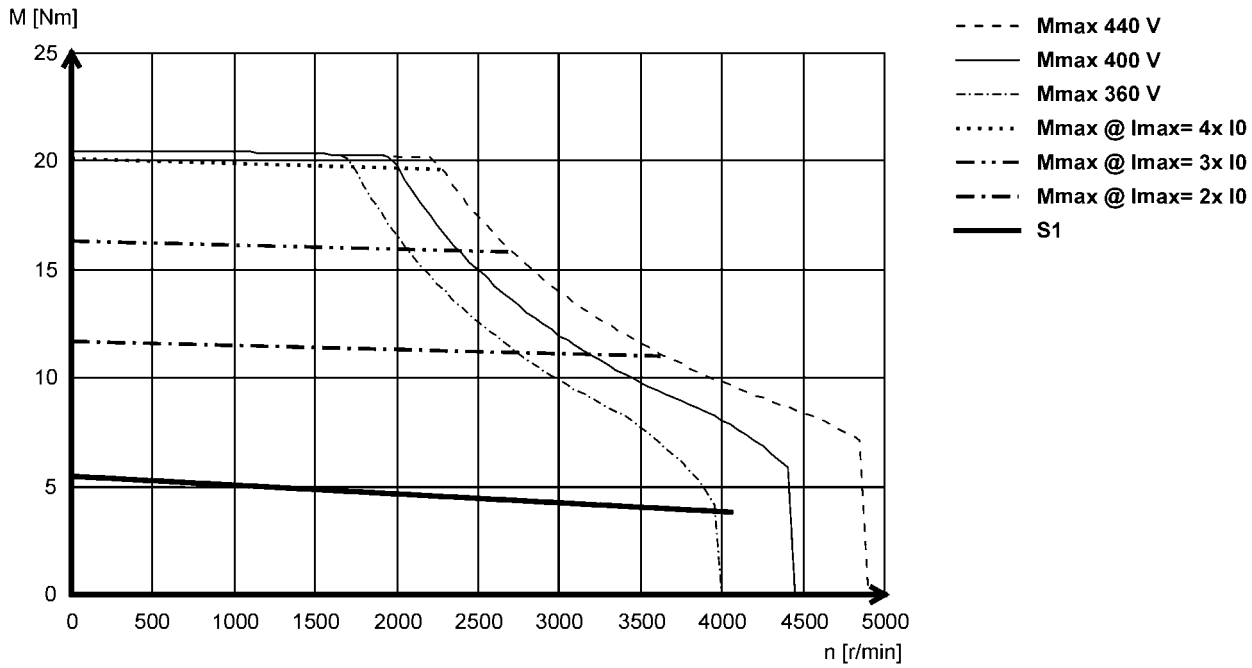

MCS09H60- (non-ventilated)

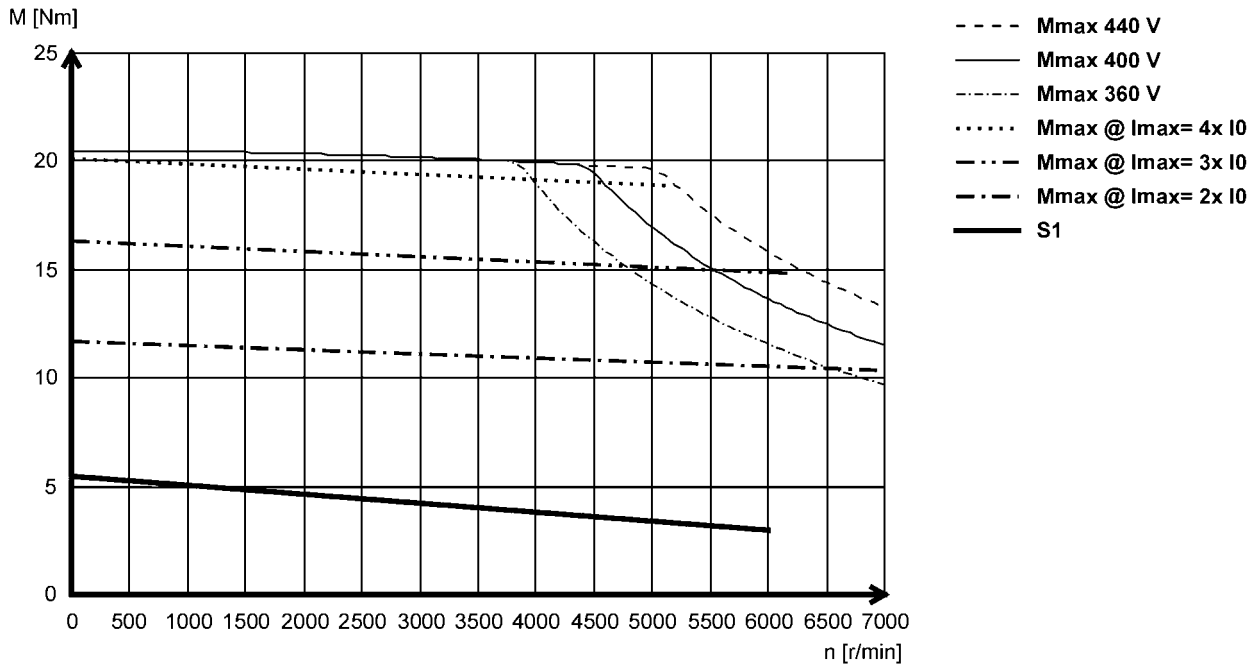



Torque characteristics

- The data applies to a mains connection voltage of 3 x 400 V.
- You can find further torque characteristics at **www.lenze.de/dsc**.

MCS09L41- (non-ventilated)

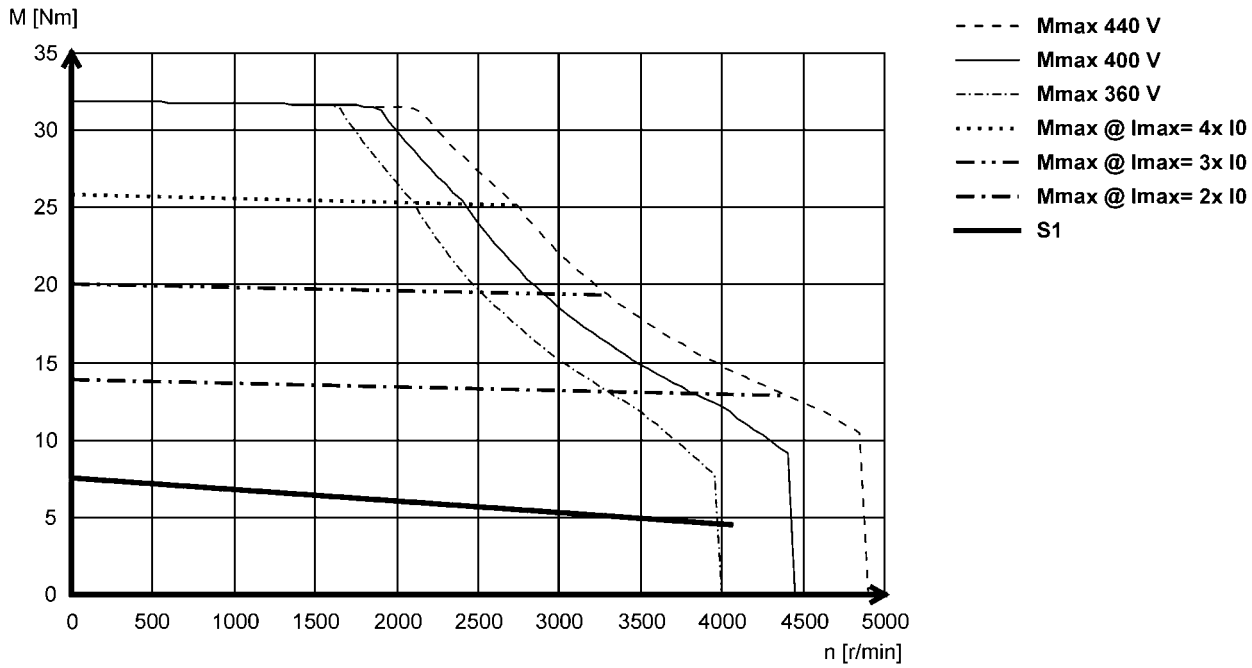

MCS09L51- (non-ventilated)

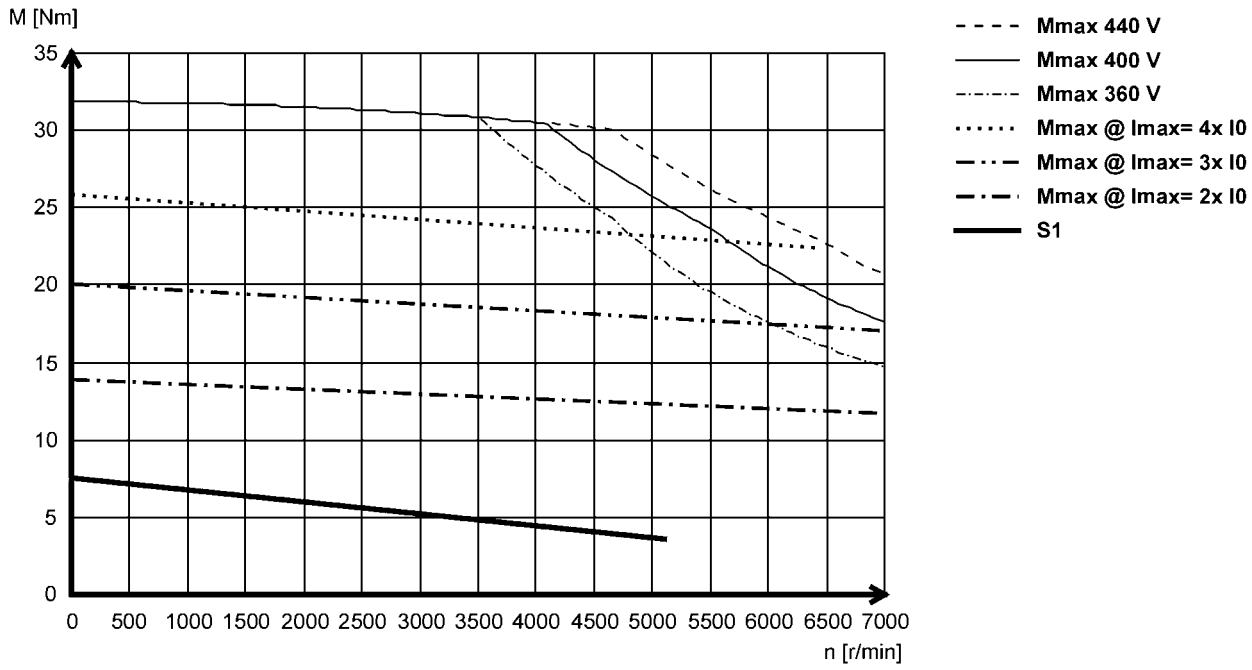



Torque characteristics

- The data applies to a mains connection voltage of 3 x 400 V.
- You can find further torque characteristics at **www.lenze.de/dsc**.

MCS12D17 (forced ventilated)

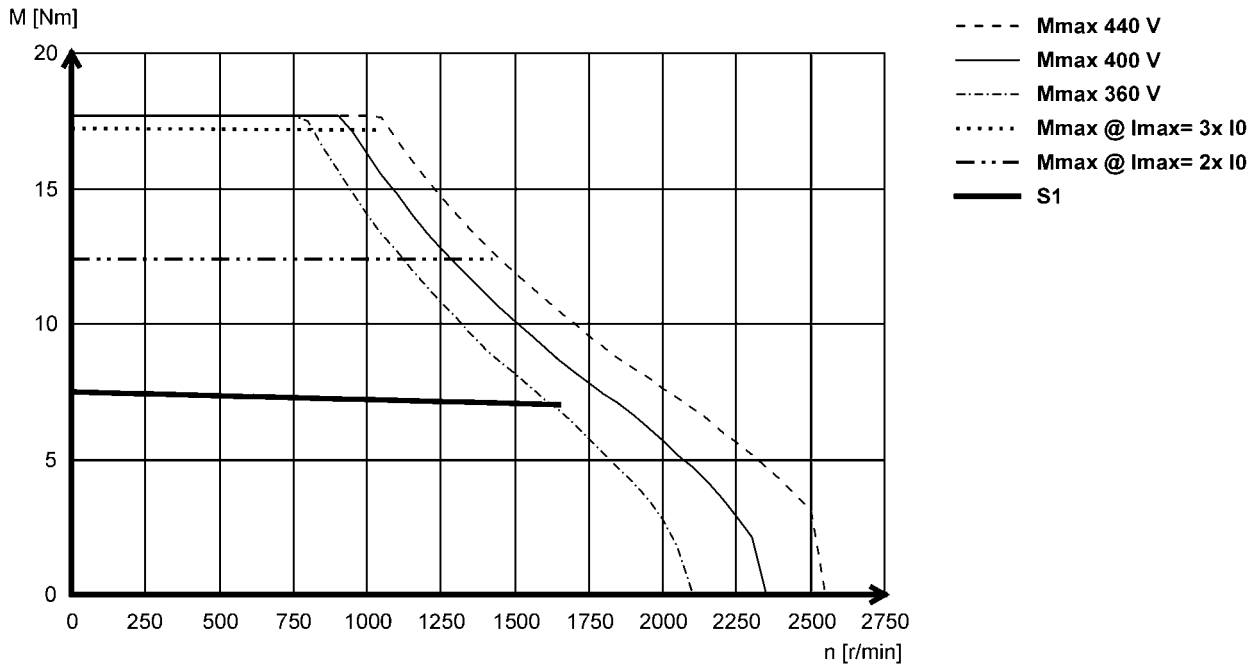

MCS12D20- (non-ventilated)

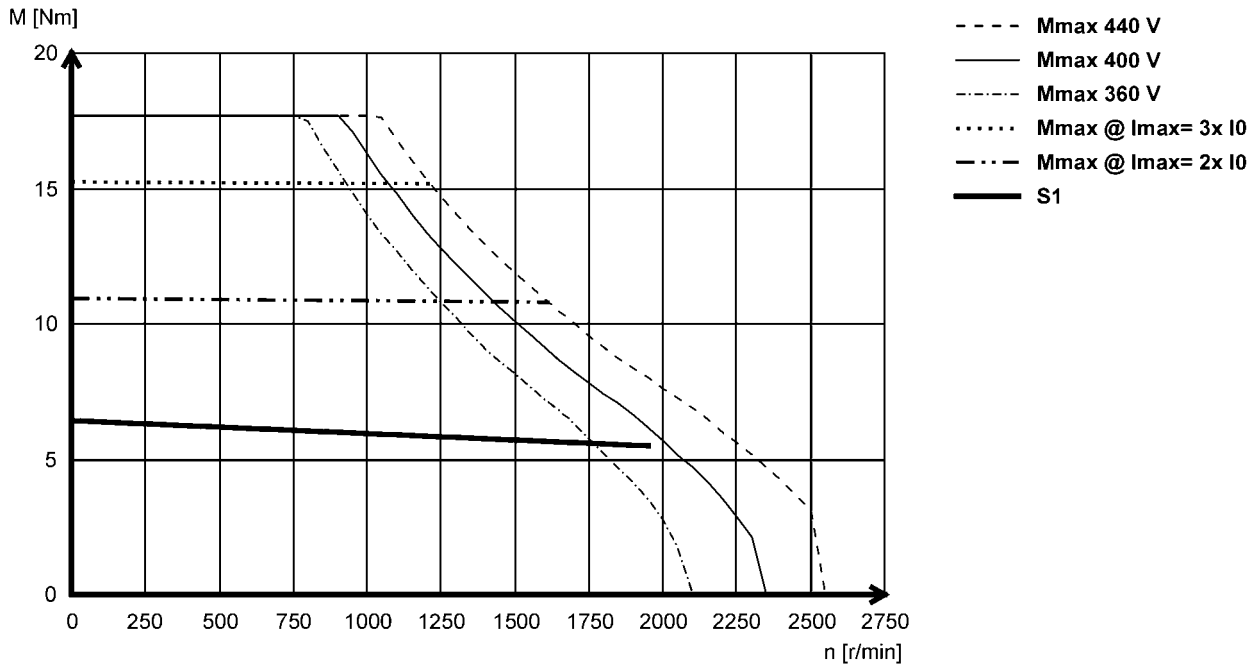



Torque characteristics

- The data applies to a mains connection voltage of 3 x 400 V.
- You can find further torque characteristics at **www.lenze.de/dsc**.

MCS12D35- (forced ventilated)

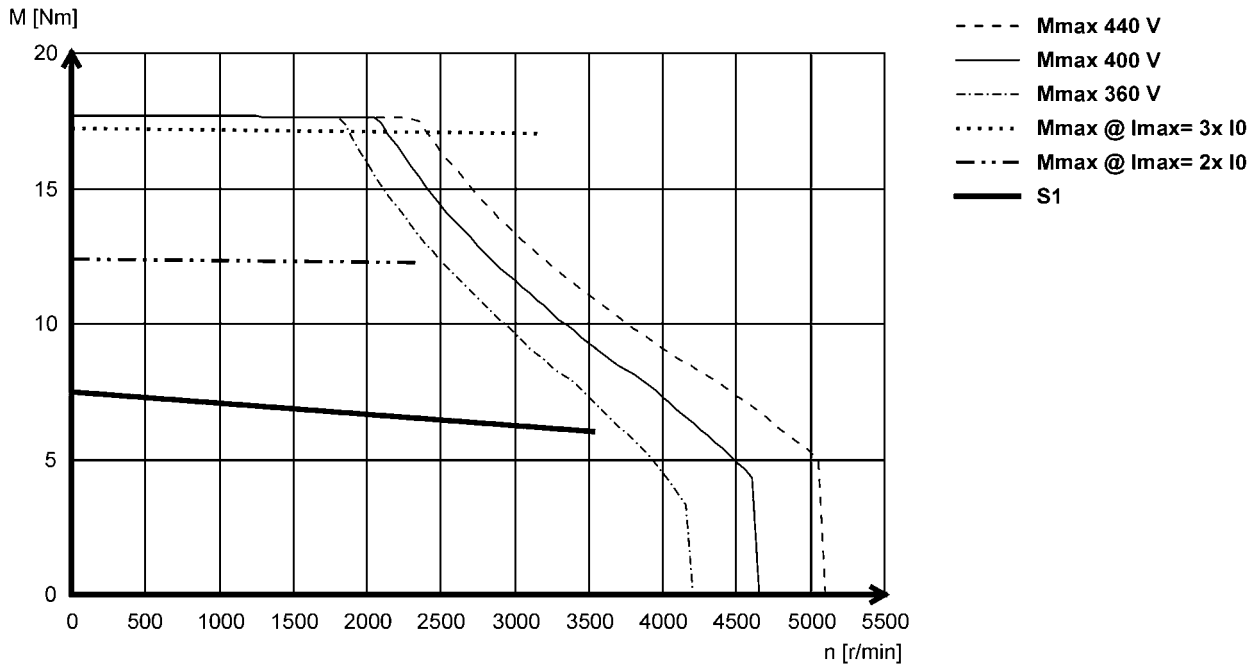

MCS12D41- (non-ventilated)

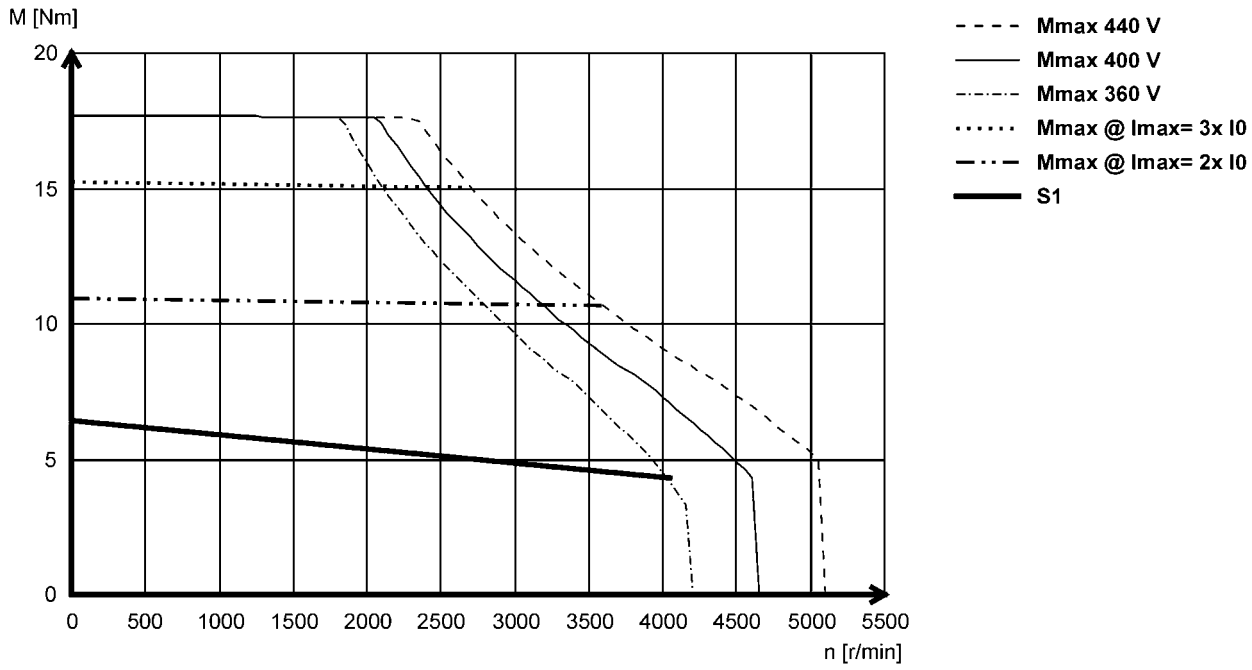



Torque characteristics

- The data applies to a mains connection voltage of 3 x 400 V.
- You can find further torque characteristics at **www.lenze.de/dsc**.

MCS12H14- (forced ventilated)

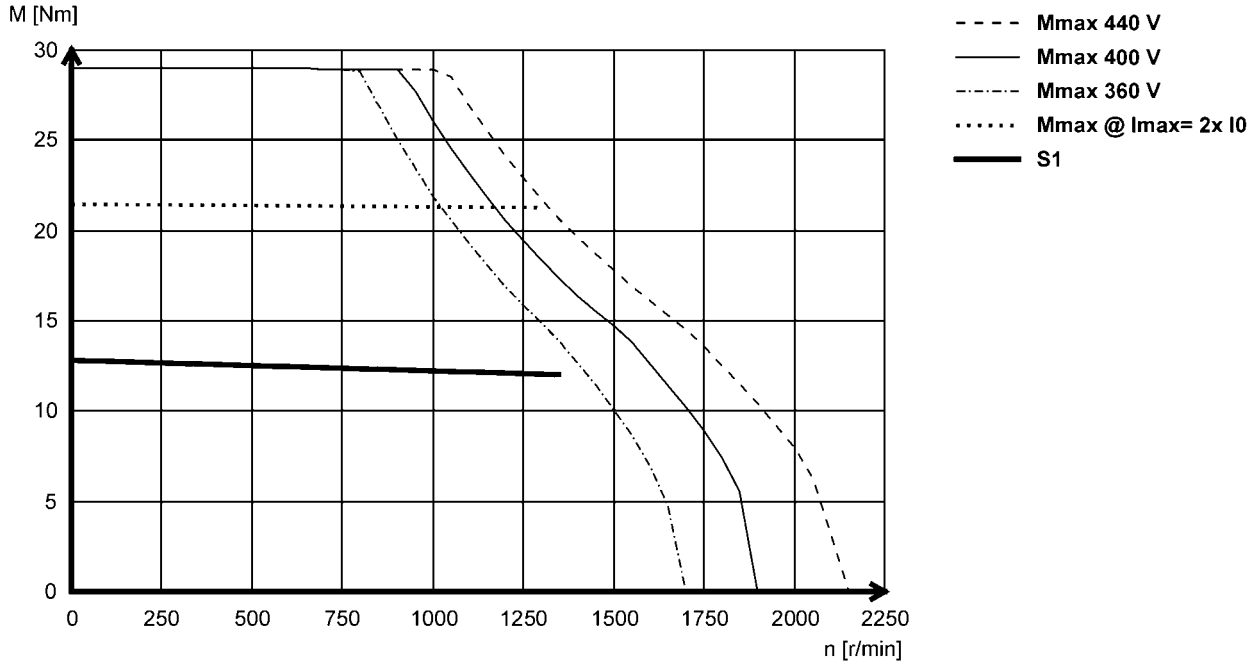

MCS12H15- (non-ventilated)

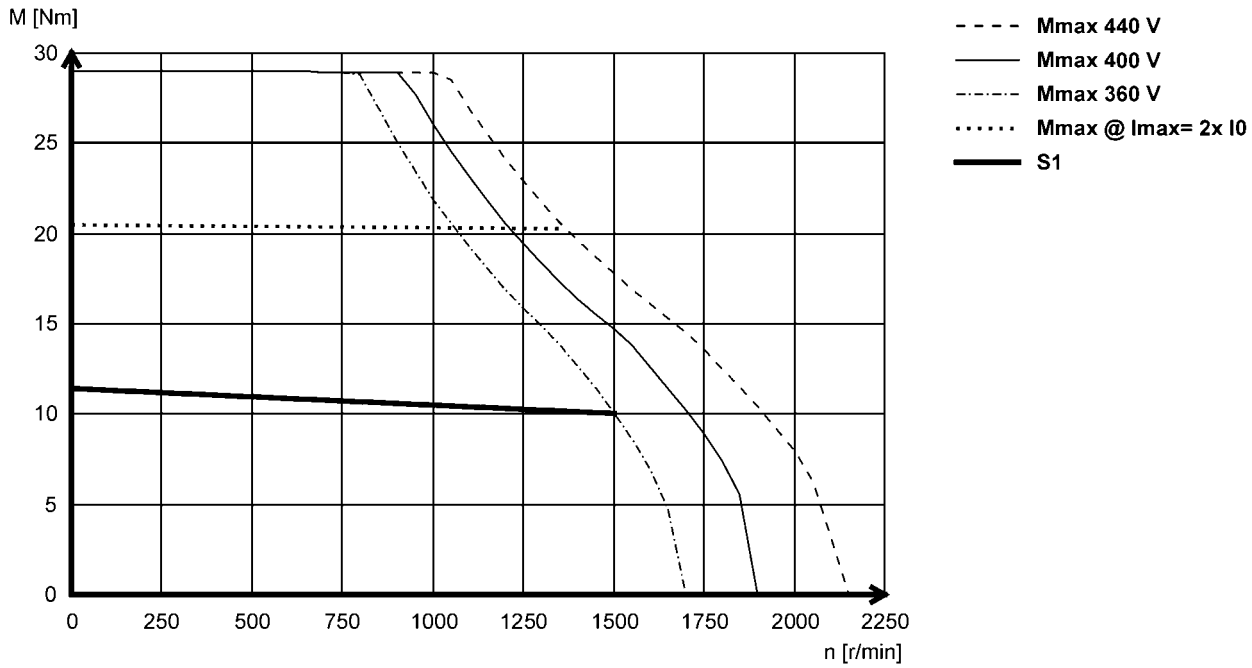



Torque characteristics

- The data applies to a mains connection voltage of 3 x 400 V.
- You can find further torque characteristics at **www.lenze.de/dsc**.

MCS12H34- (forced ventilated)

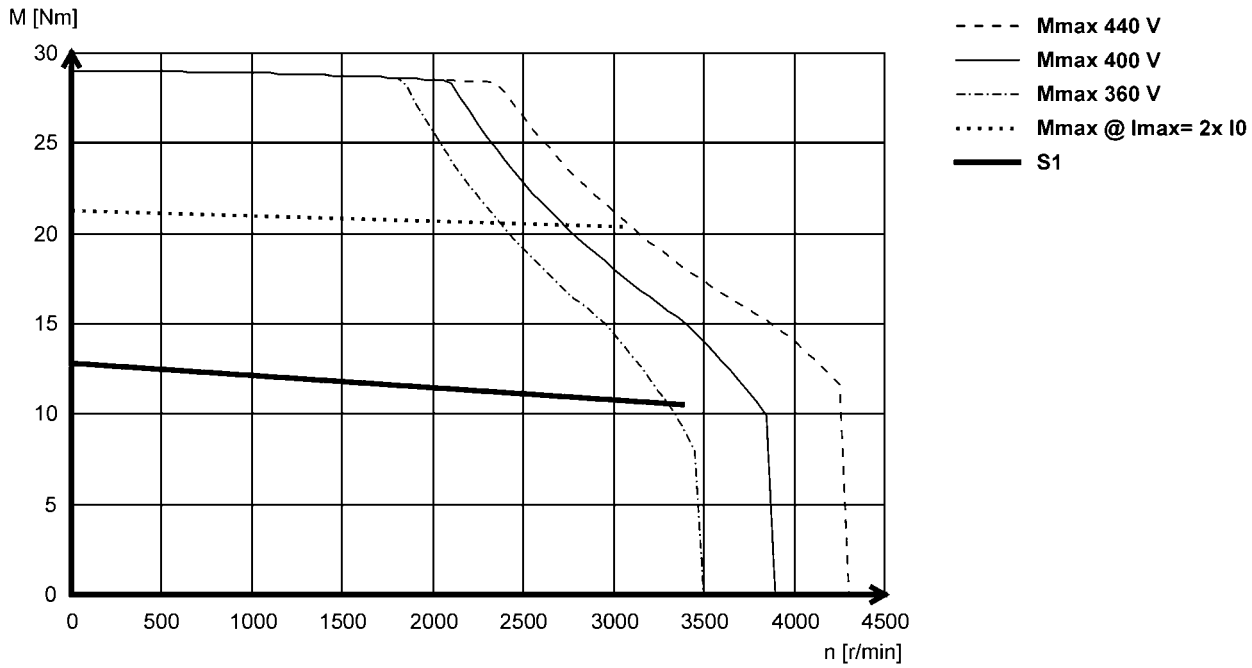

MCS12H35- (non-ventilated)

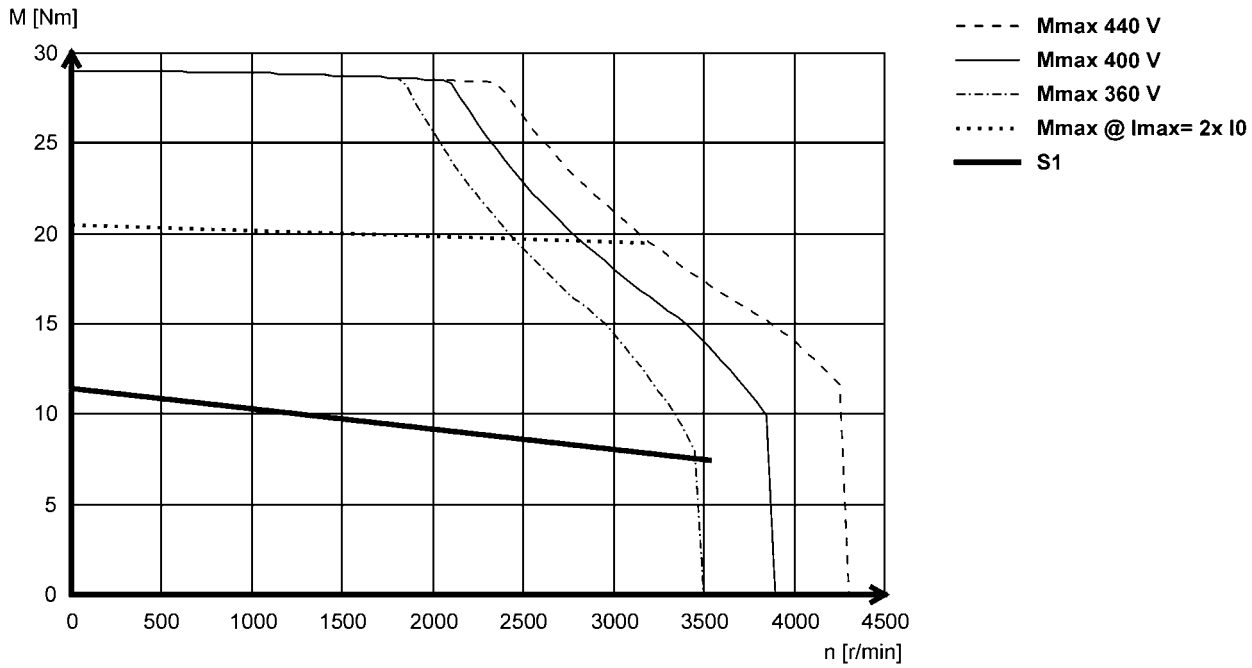



Torque characteristics

- The data applies to a mains connection voltage of 3 x 400 V.
- You can find further torque characteristics at **www.lenze.de/dsc**.

MCS12L17- (forced ventilated)

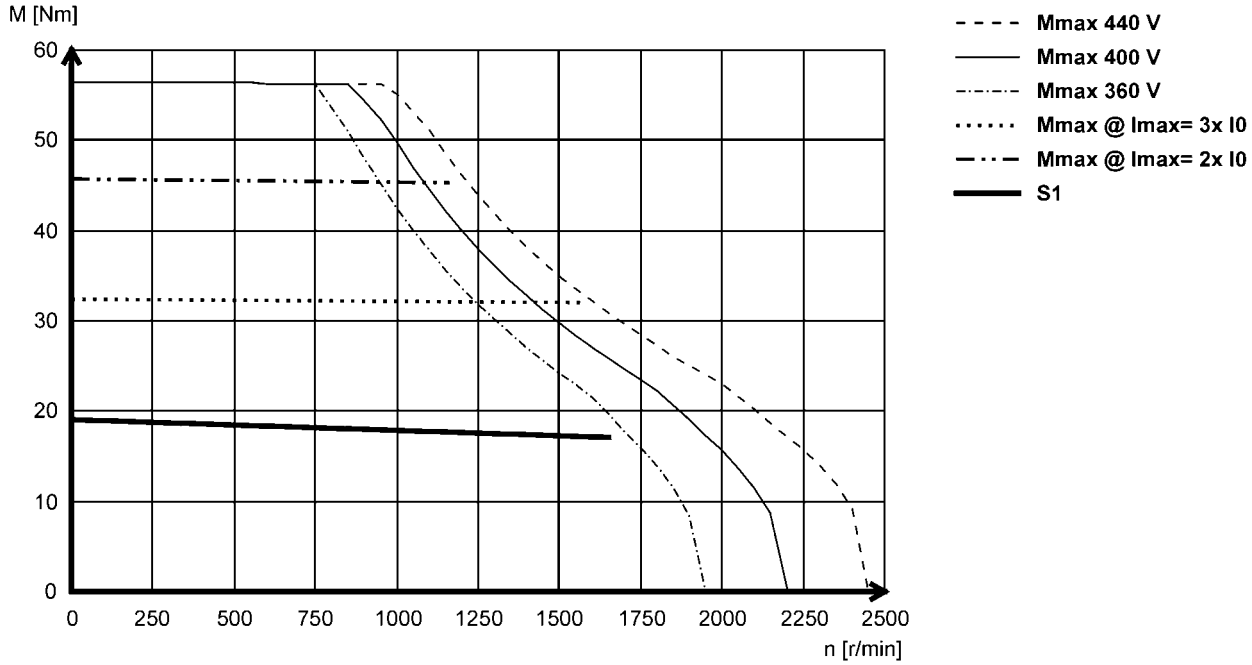

MCS12L20- (non-ventilated)

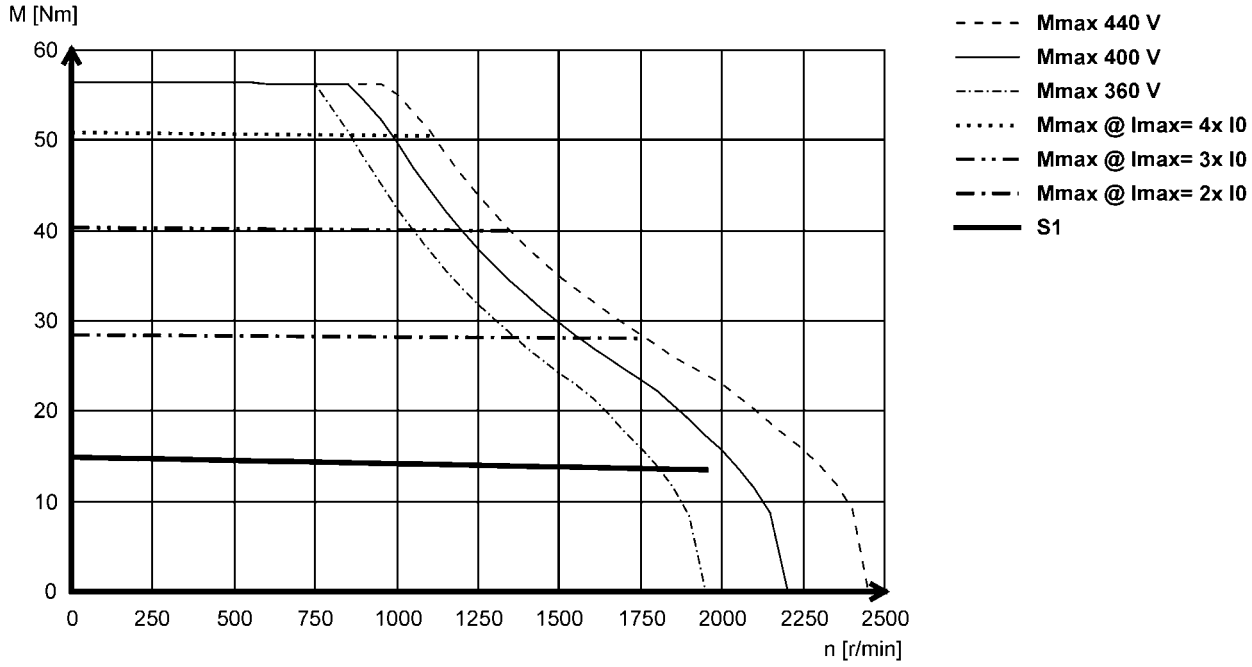



Torque characteristics

- The data applies to a mains connection voltage of 3 x 400 V.
- You can find further torque characteristics at **www.lenze.de/dsc**.

MCS12L39- (forced ventilated)

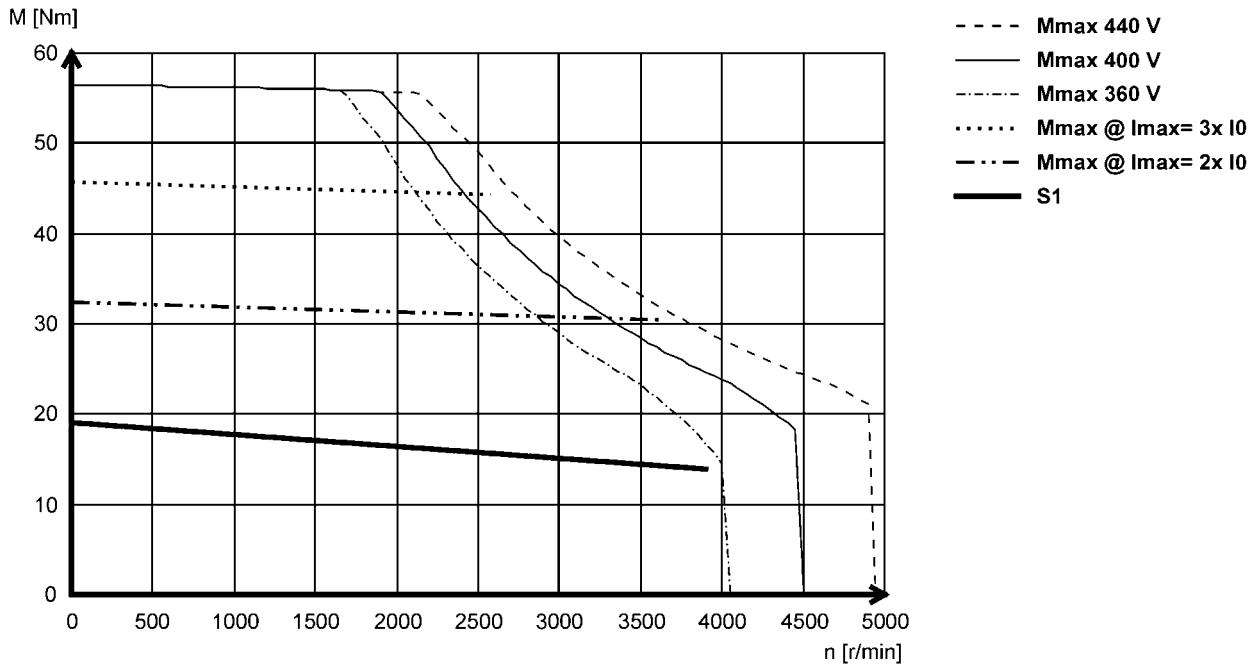

MCS12L41- (non-ventilated)

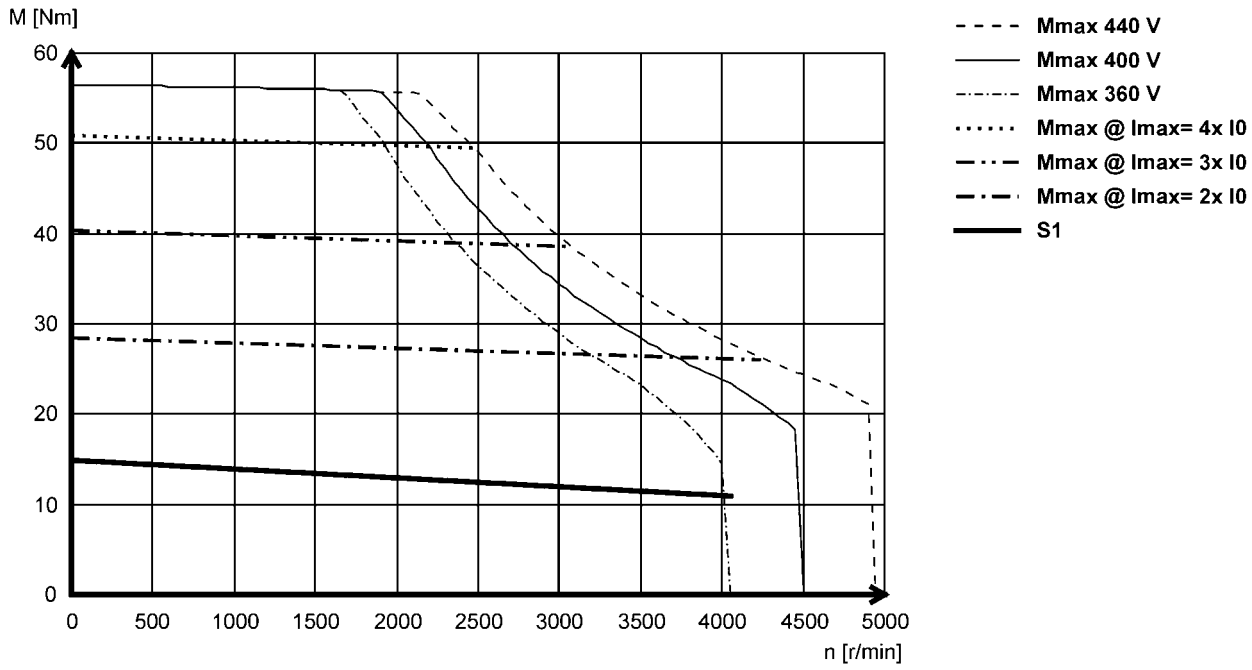



Torque characteristics

- The data applies to a mains connection voltage of 3 x 400 V.
- You can find further torque characteristics at **www.lenze.de/dsc**.

MCS14D14- (forced ventilated)

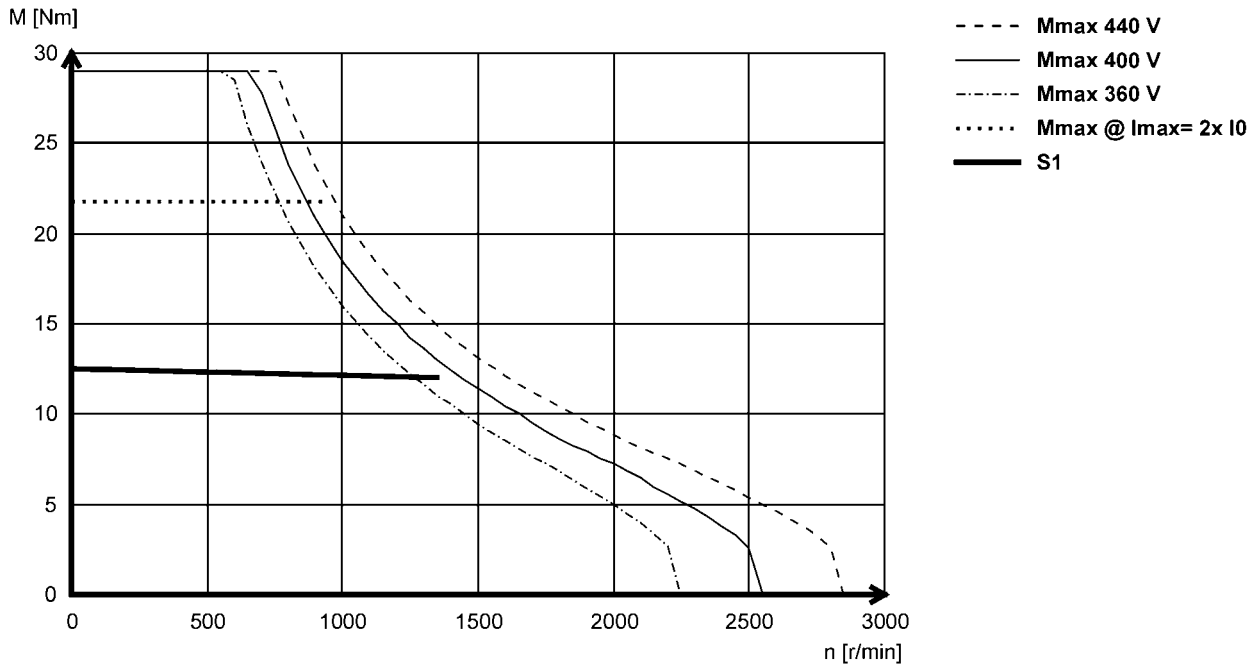

MCS14D15- (non-ventilated)

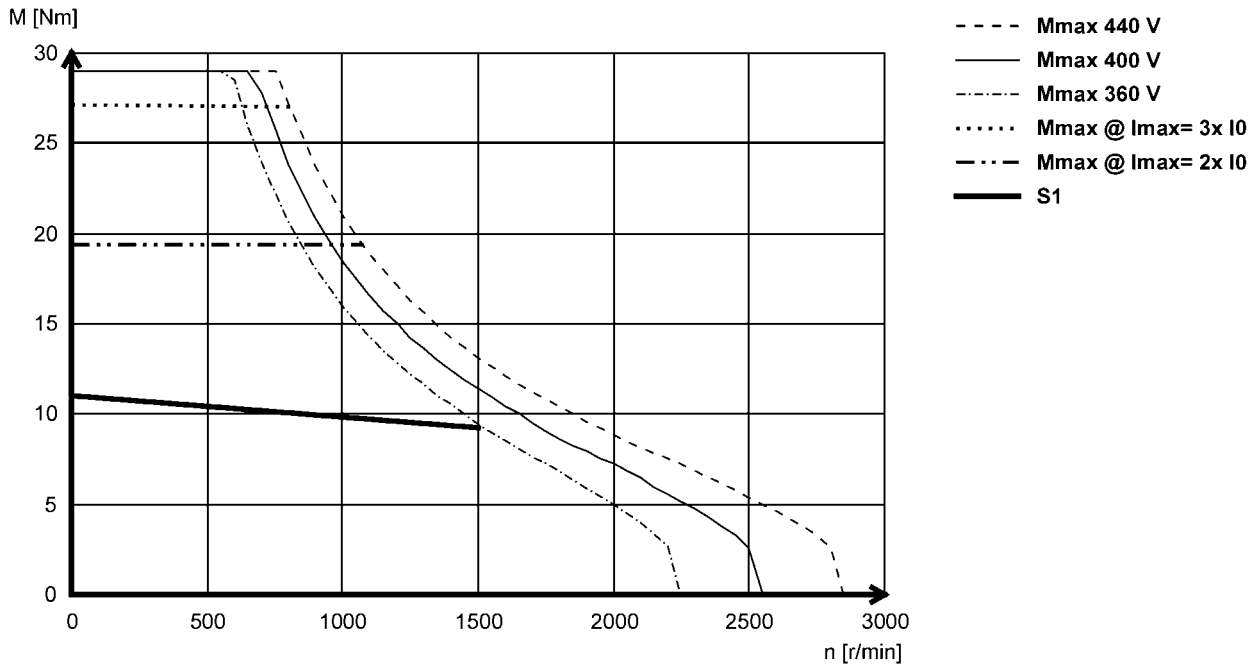



Torque characteristics

- The data applies to a mains connection voltage of 3 x 400 V.
- You can find further torque characteristics at **www.lenze.de/dsc**.

MCS14D30 (forced ventilated)

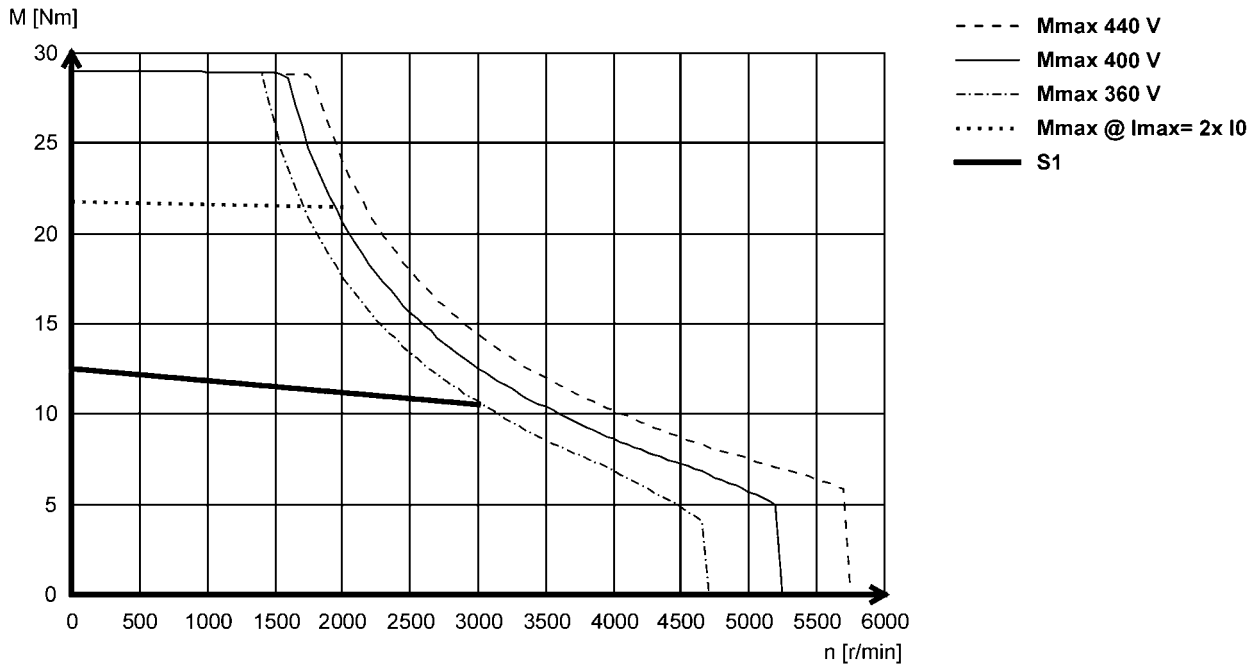

MCS14D36- (non-ventilated)

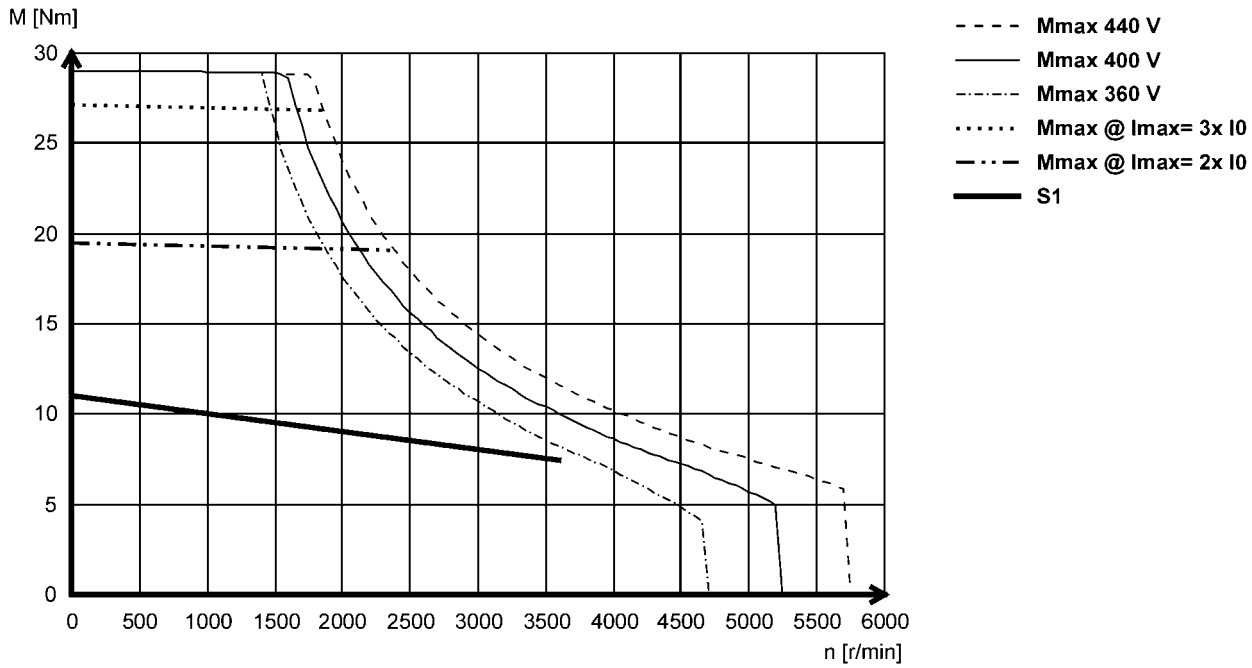



Torque characteristics

- The data applies to a mains connection voltage of 3 x 400 V.
- You can find further torque characteristics at **www.lenze.de/dsc**.

MCS14H12- (forced ventilated)

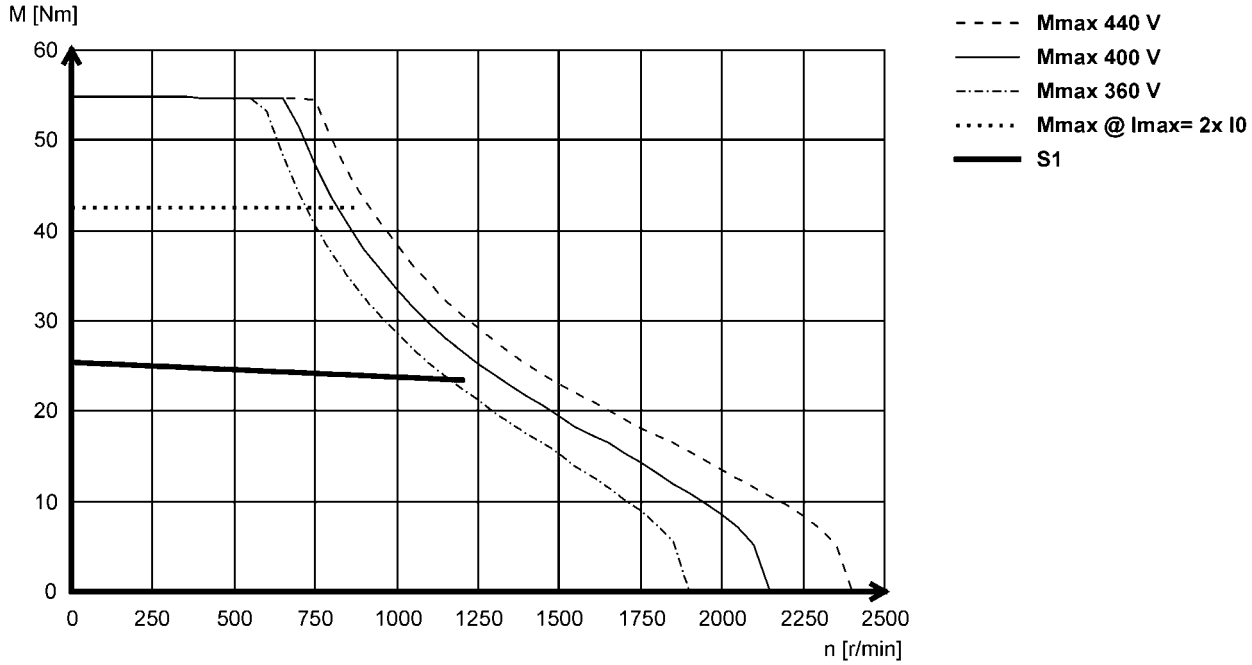

MCS14H15- (non-ventilated)

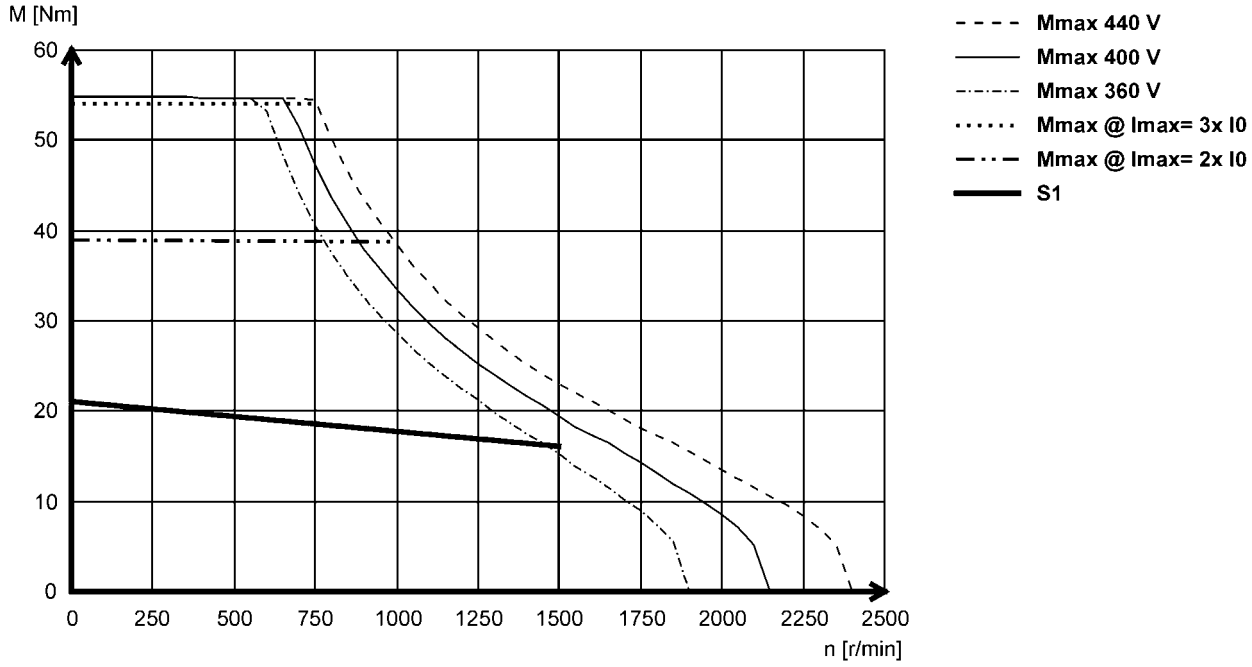



Torque characteristics

- The data applies to a mains connection voltage of 3 x 400 V.
- You can find further torque characteristics at **www.lenze.de/dsc**.

MCS14H28- (forced ventilated)

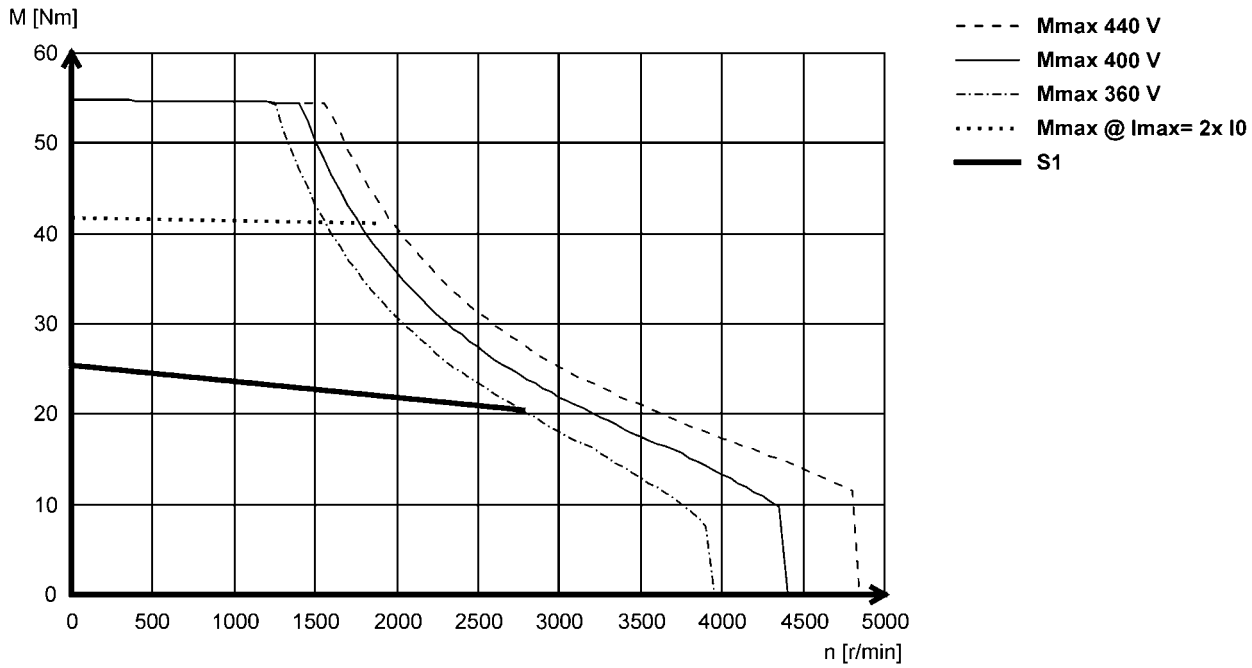

MCS14H32- (non-ventilated)

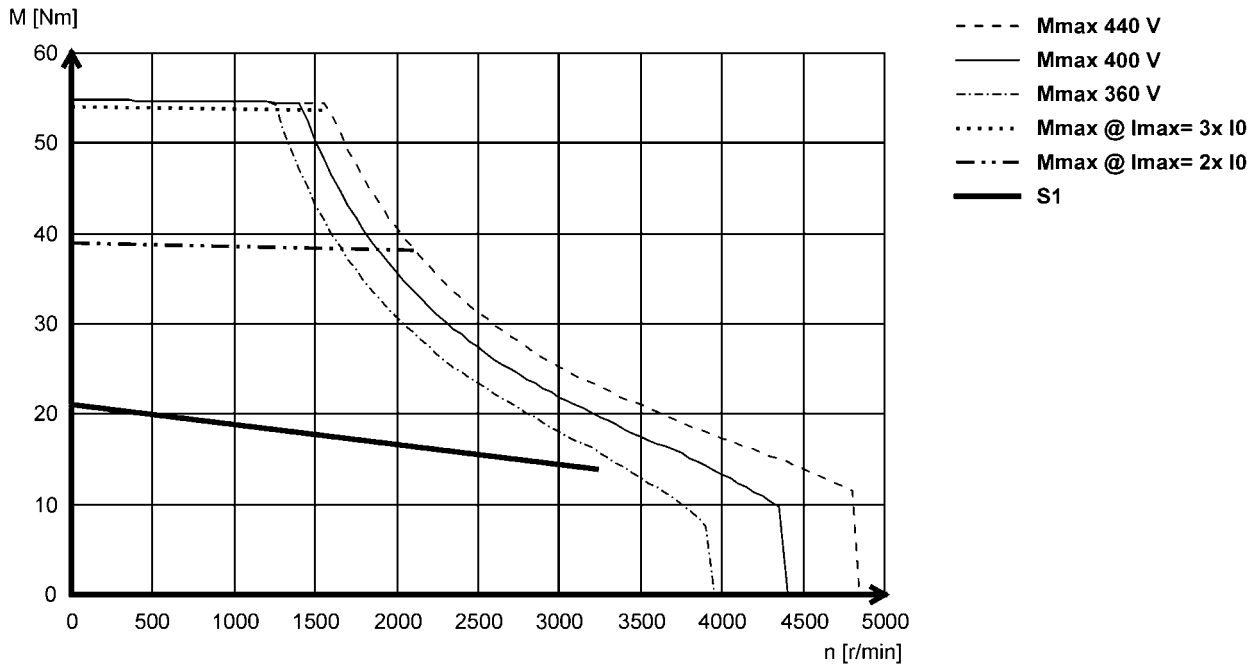



Torque characteristics

- The data applies to a mains connection voltage of 3 x 400 V.
- You can find further torque characteristics at **www.lenze.de/dsc**.

MCS14L14- (forced ventilated)

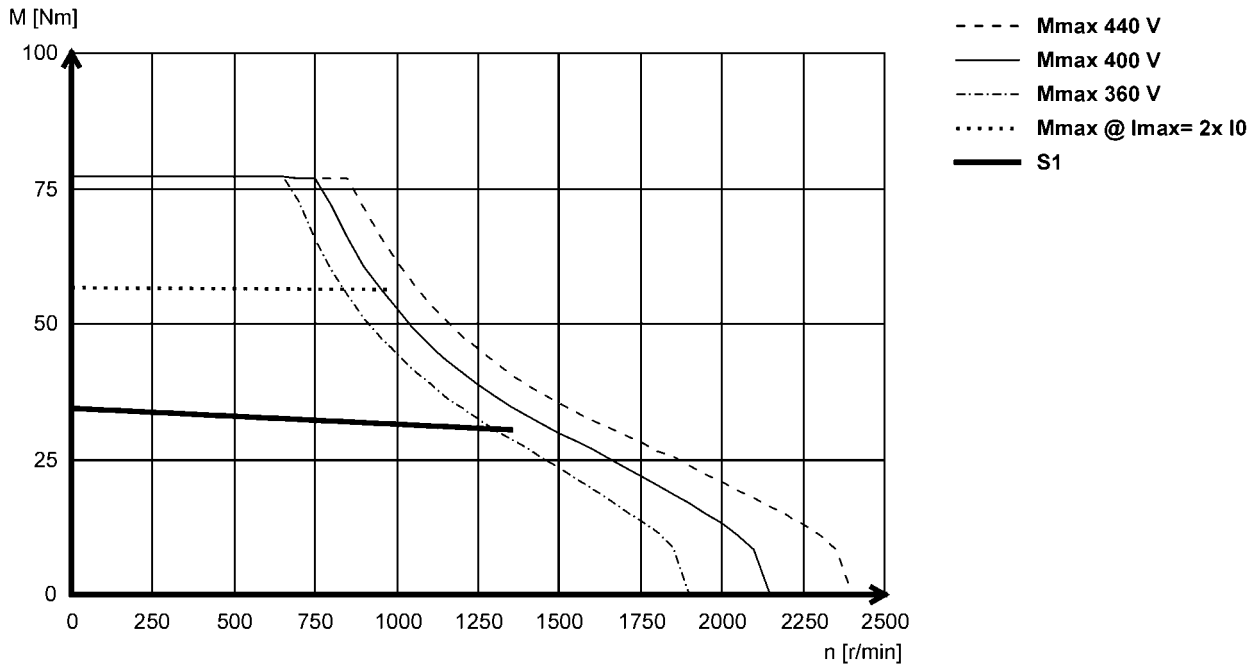

MCS14L15- (non-ventilated)

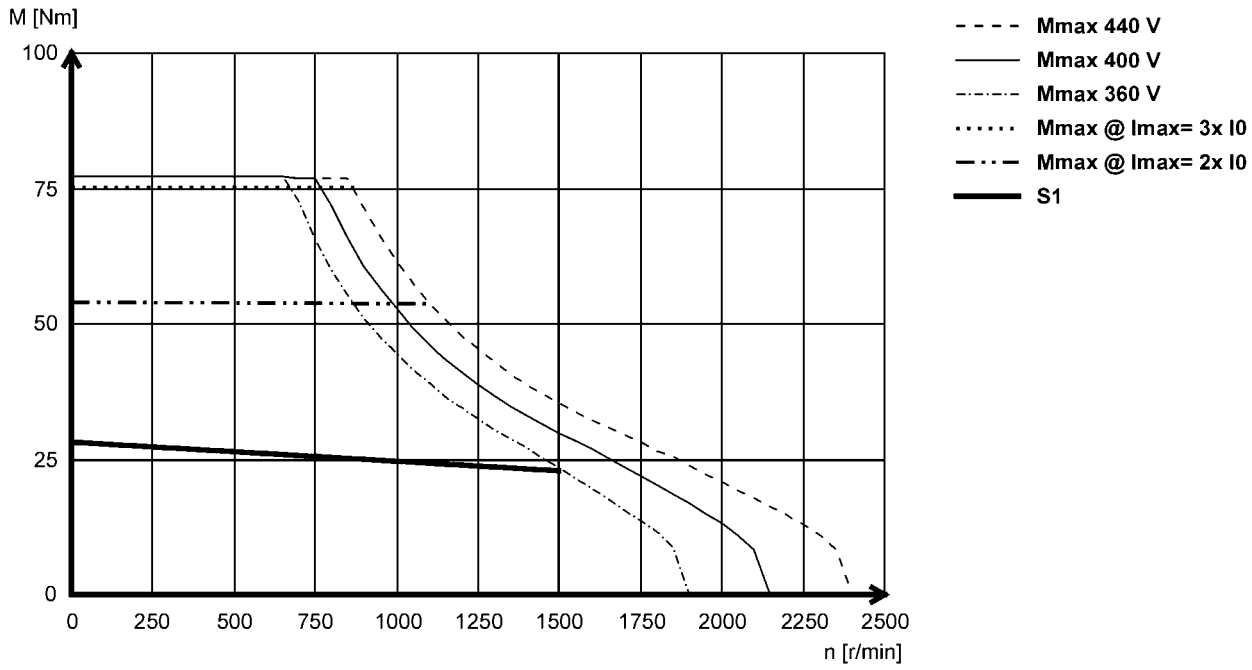



Torque characteristics

- The data applies to a mains connection voltage of 3 x 400 V.
- You can find further torque characteristics at **www.lenze.de/dsc**.

MCS14L30- (forced ventilated)

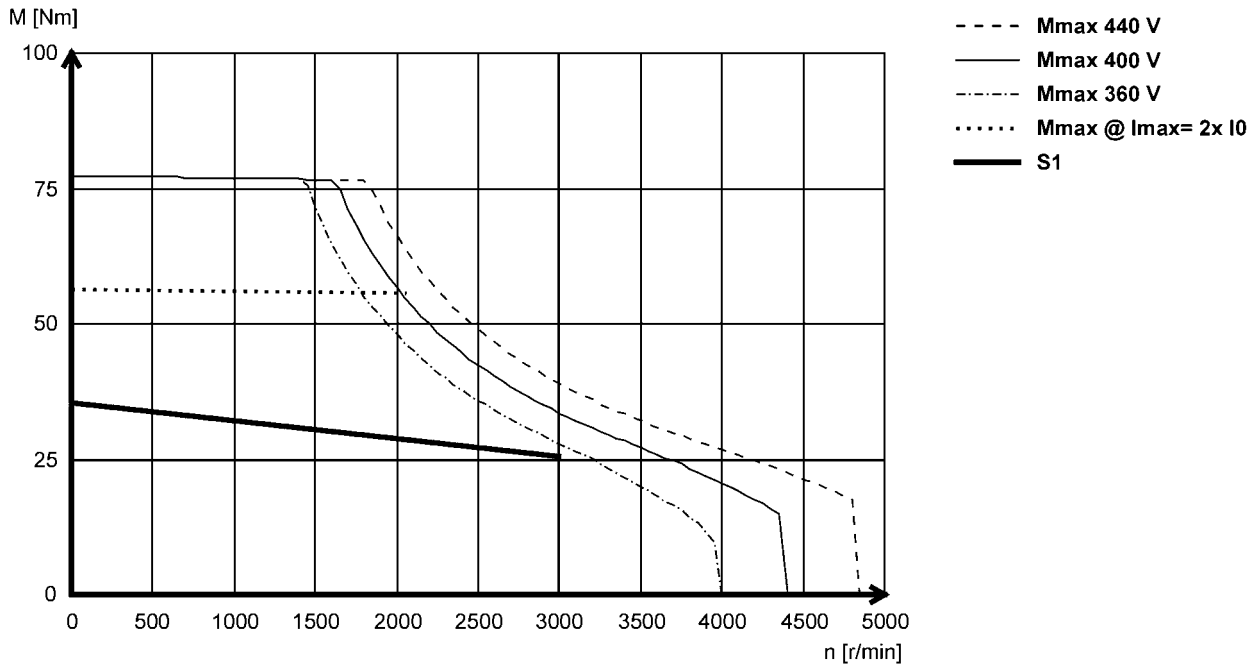

MCS14L32- (non-ventilated)

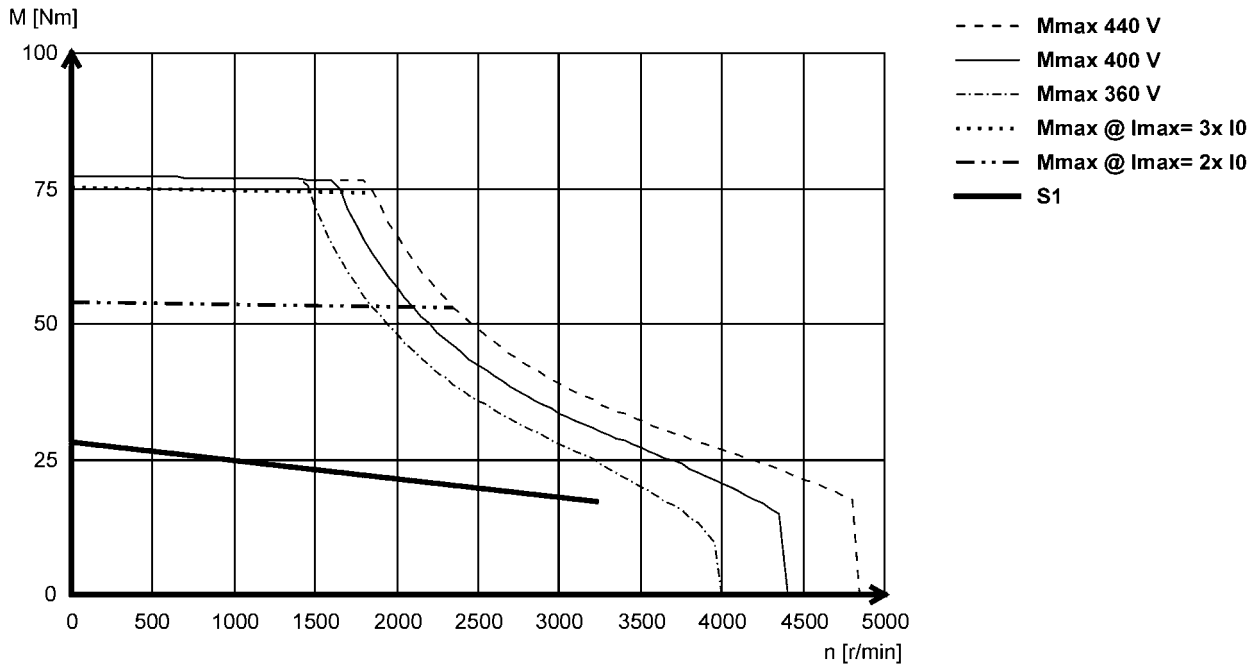



Torque characteristics

- The data applies to a mains connection voltage of 3 x 400 V.
- You can find further torque characteristics at **www.lenze.de/dsc**.

MCS14P11- (forced ventilated)

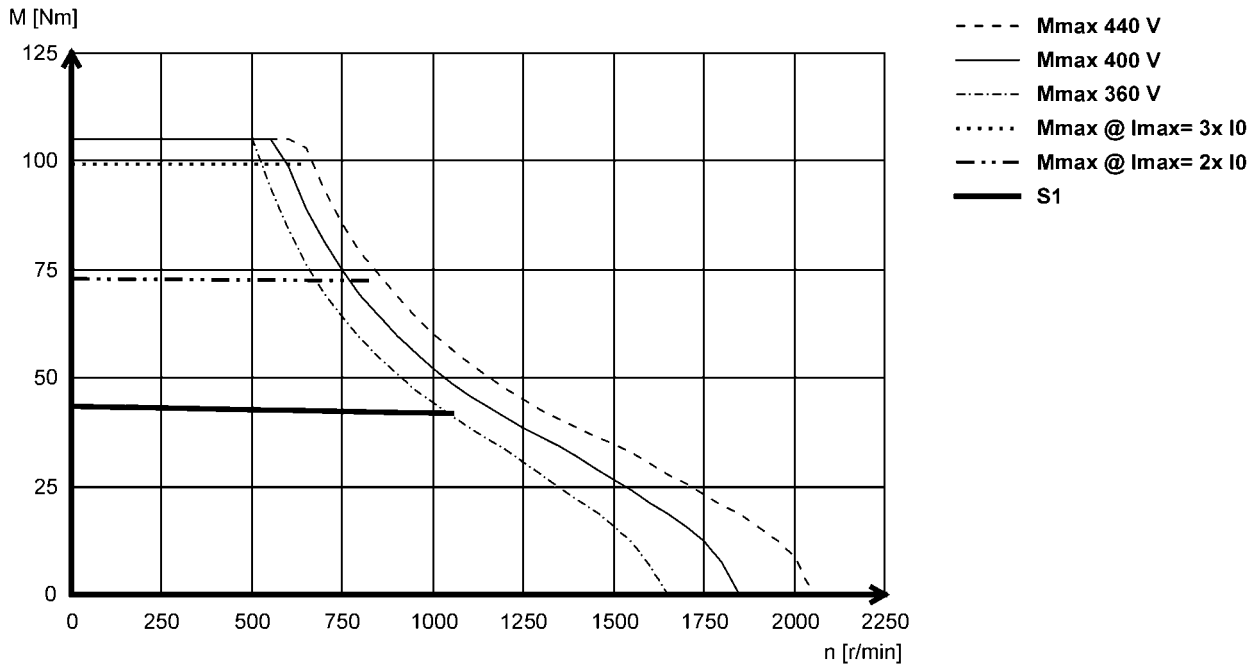

MCS14P14- (non-ventilated)

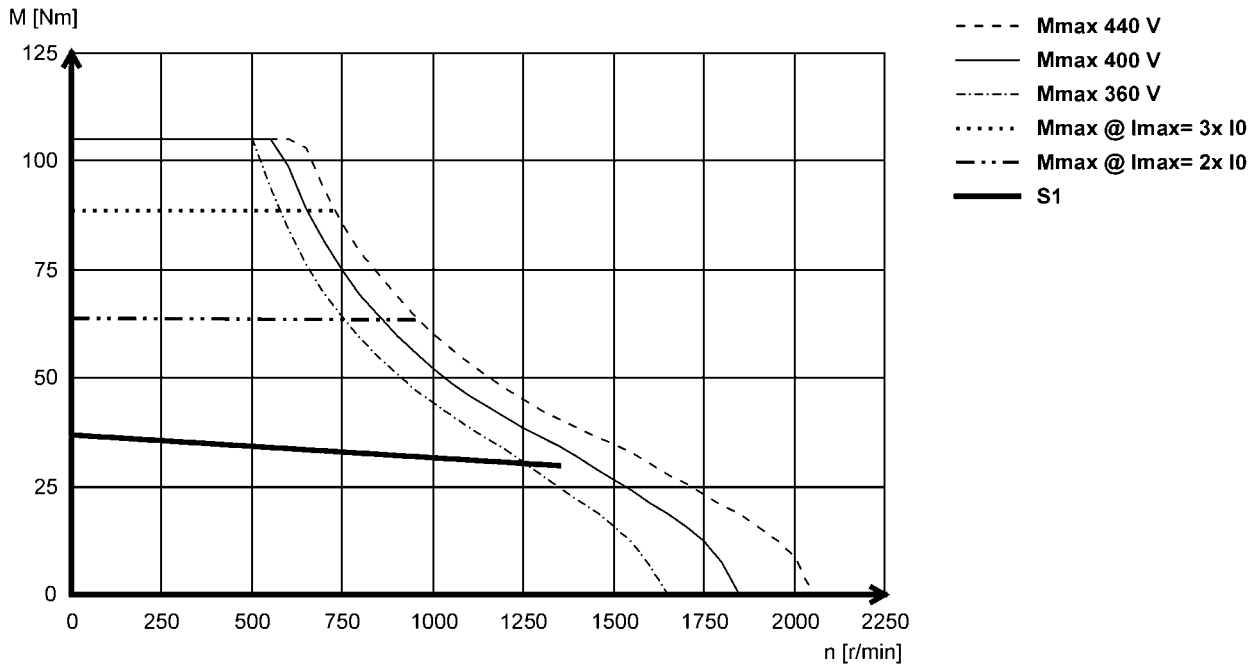



Torque characteristics

- The data applies to a mains connection voltage of 3 x 400 V.
- You can find further torque characteristics at **www.lenze.de/dsc**.

MCS14P26- (forced ventilated)

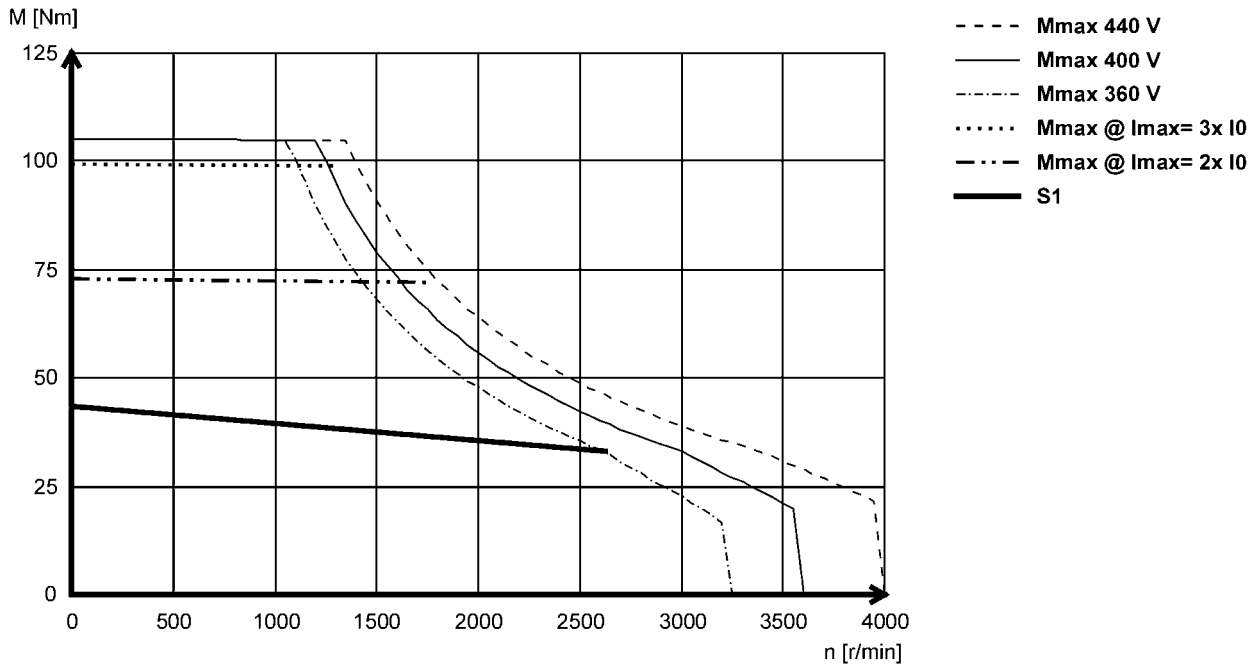

MCS14P32- (non-ventilated)

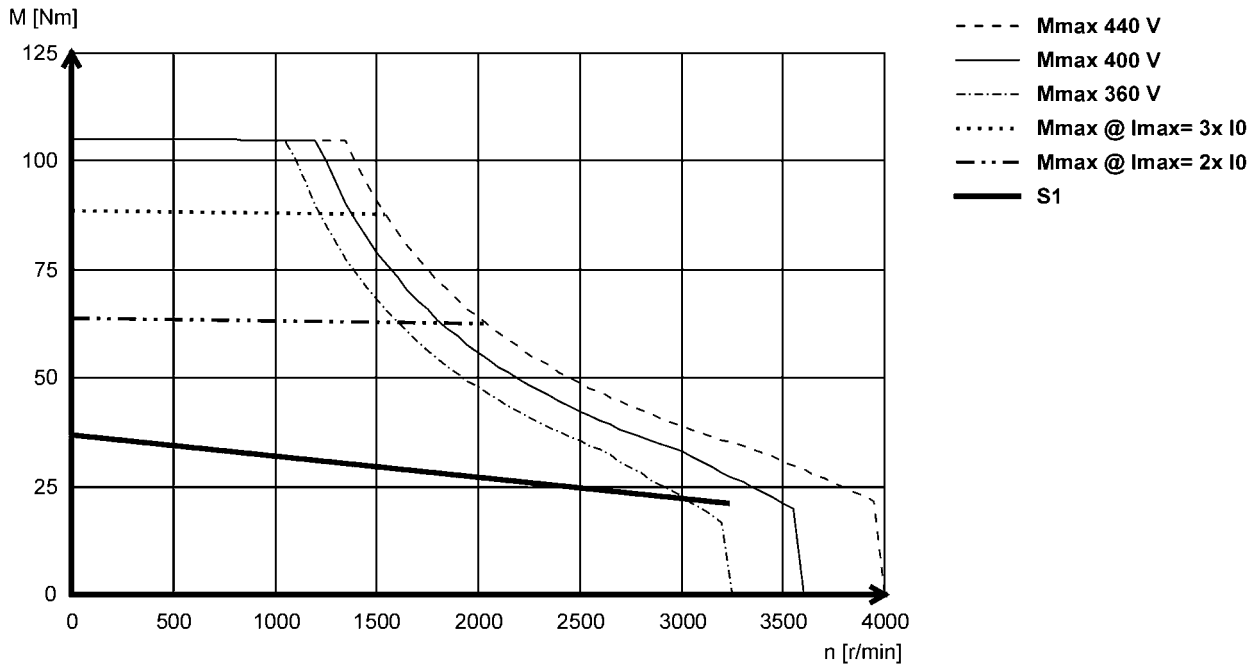



Torque characteristics

- The data applies to a mains connection voltage of 3 x 400 V.
- You can find further torque characteristics at **www.lenze.de/dsc**.

MCS19F12- (forced ventilated)

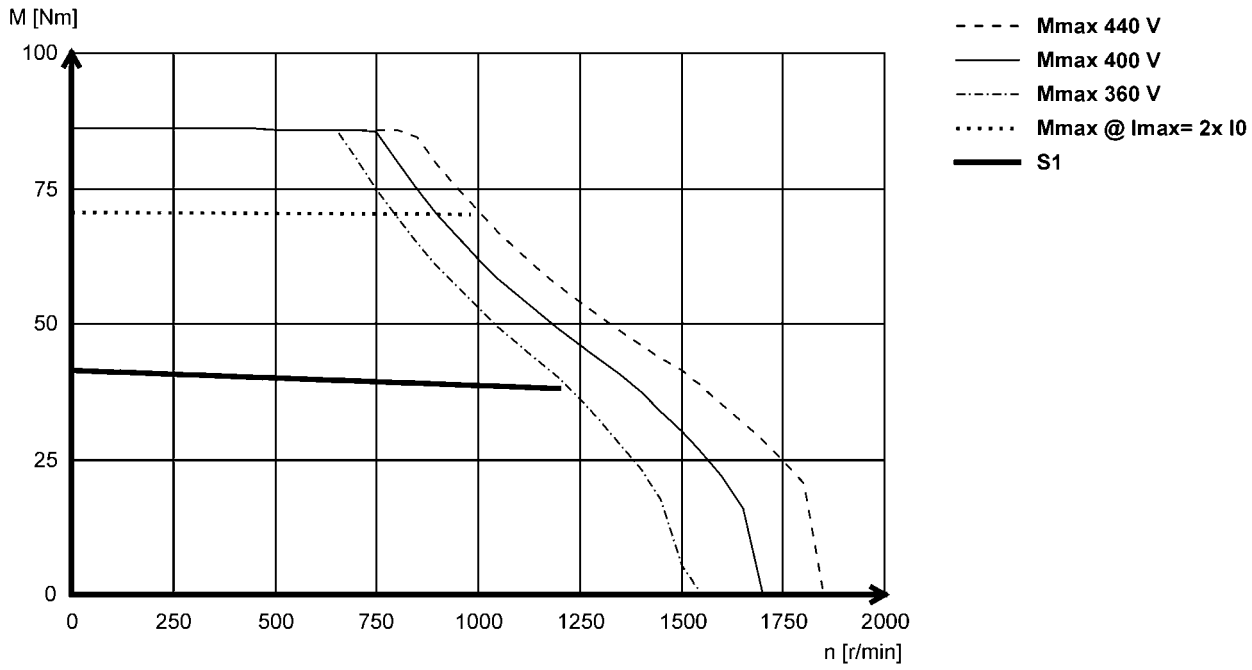

MCS19F14- (non-ventilated)

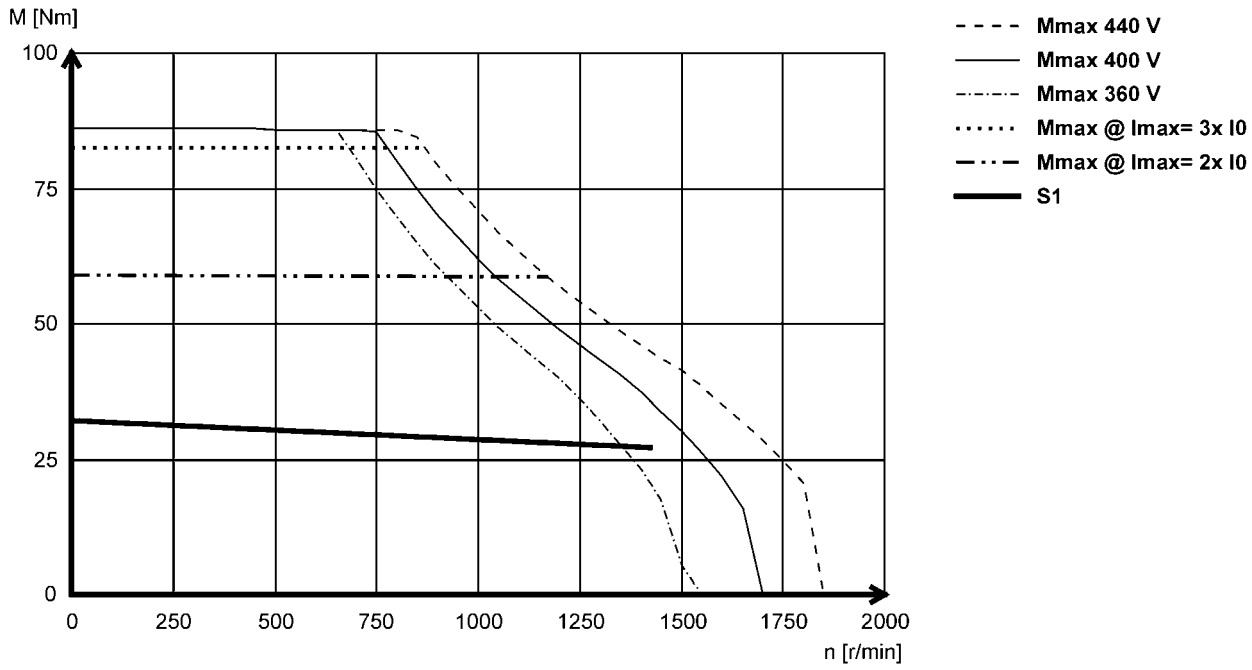



Torque characteristics

- The data applies to a mains connection voltage of 3 x 400 V.
- You can find further torque characteristics at **www.lenze.de/dsc**.

MCS19F29- (forced ventilated)

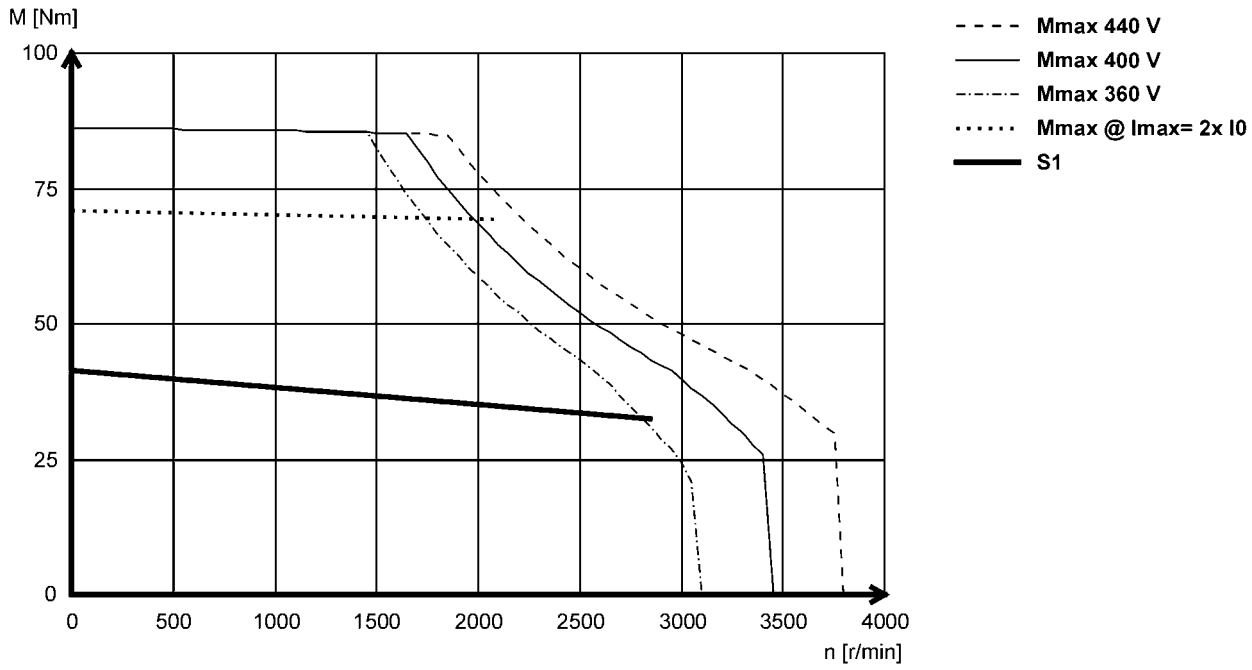

MCS19F30- (non-ventilated)

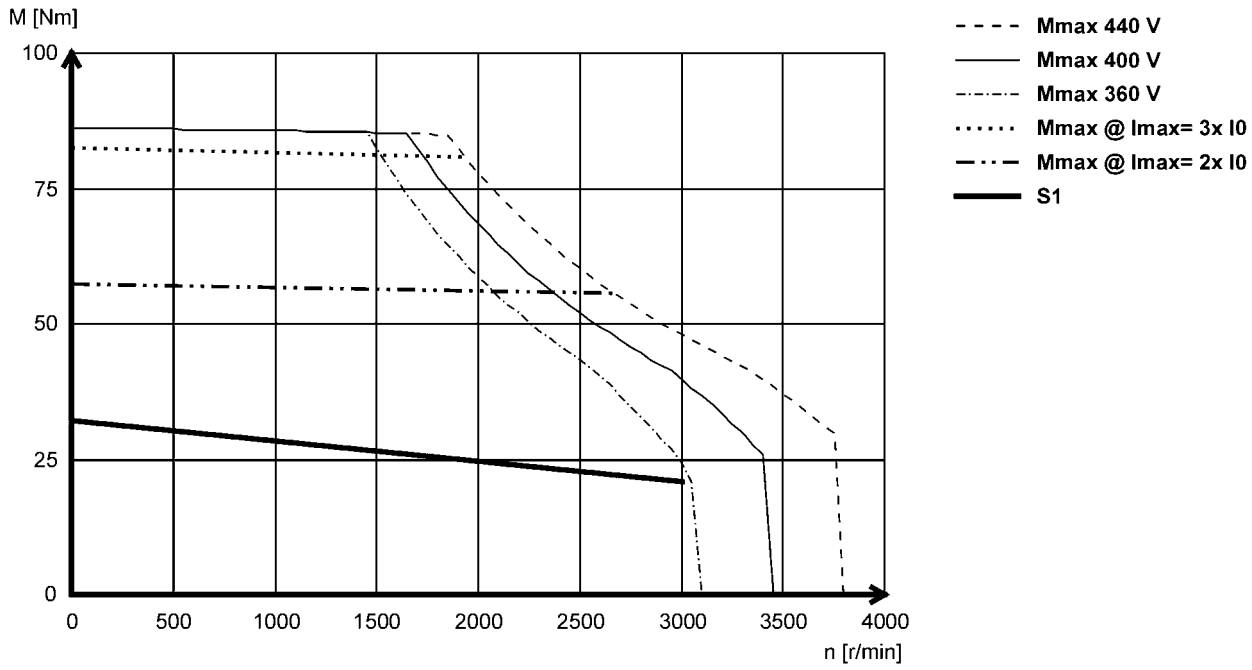



Torque characteristics

- The data applies to a mains connection voltage of 3 x 400 V.
- You can find further torque characteristics at **www.lenze.de/dsc**.

MCS19J12- (forced ventilated)

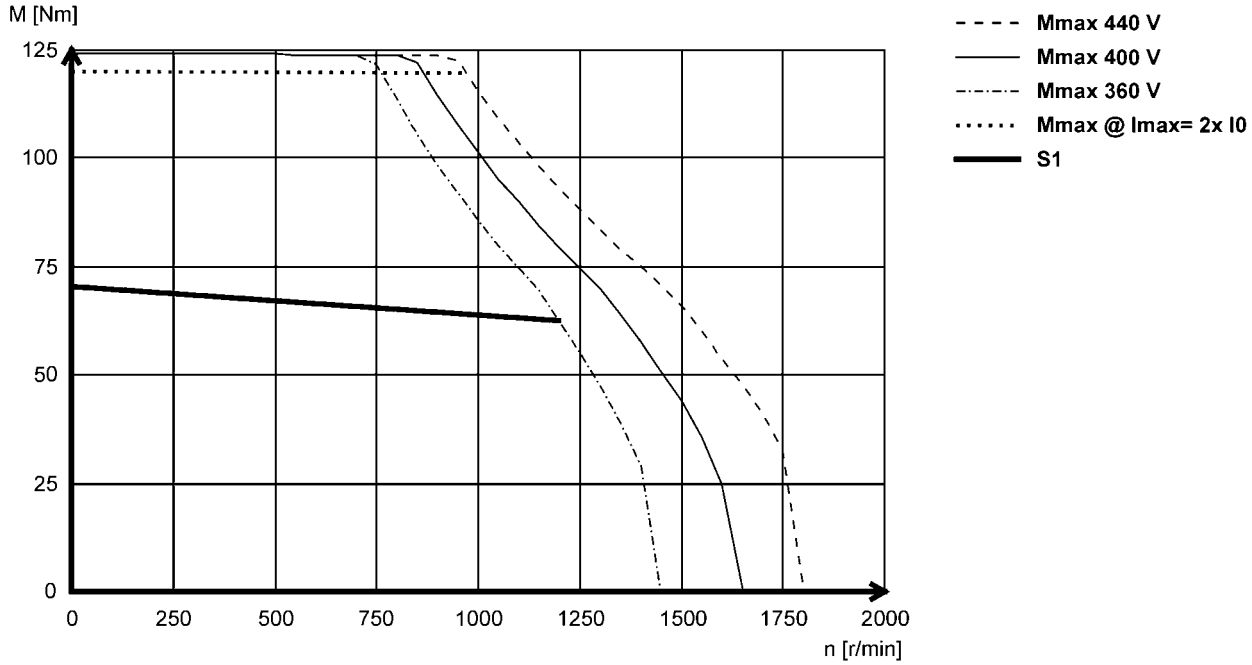

MCS19J14- (non-ventilated)

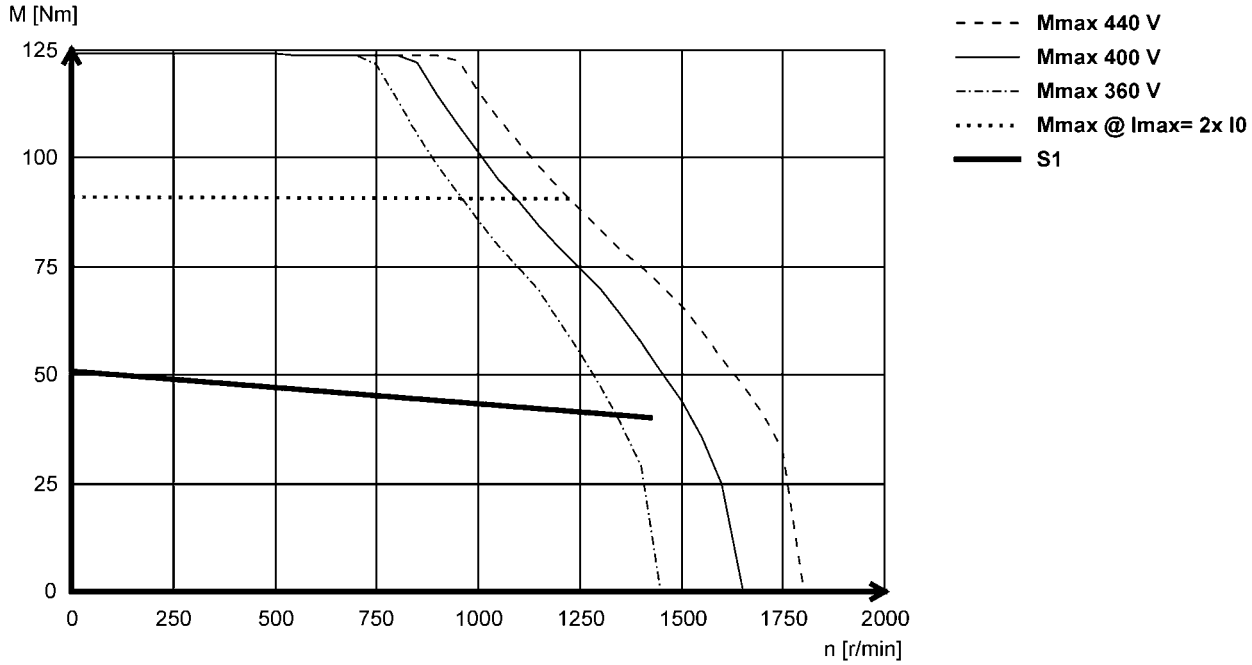



Torque characteristics

- The data applies to a mains connection voltage of 3 x 400 V.
- You can find further torque characteristics at **www.lenze.de/dsc**.

MCS19J29- (forced ventilated)

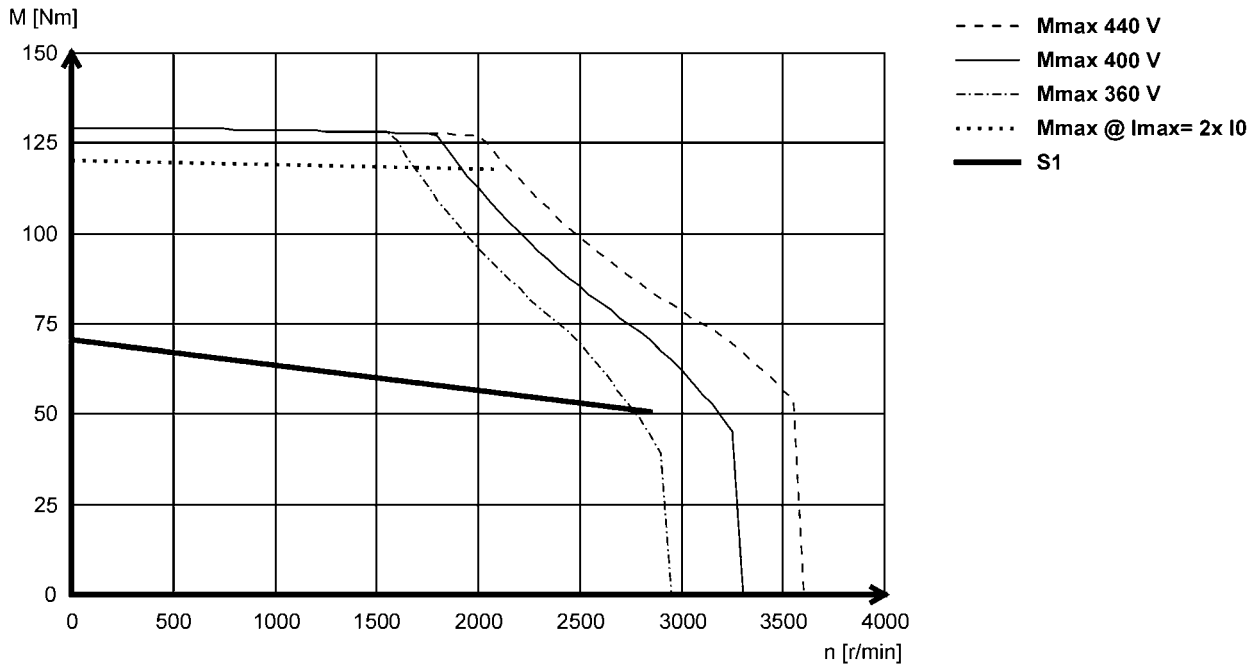

MCS19J30- (non-ventilated)

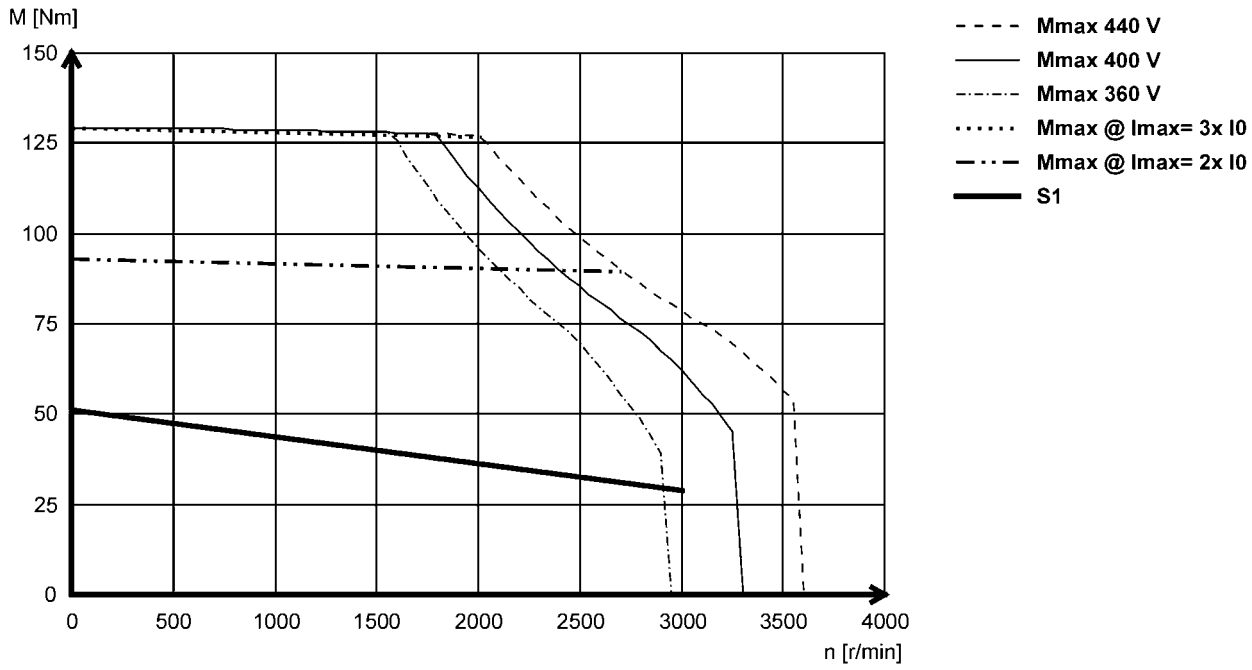



Torque characteristics

- The data applies to a mains connection voltage of 3 x 400 V.
- You can find further torque characteristics at **www.lenze.de/dsc**.

MCS19P12 (forced ventilated)

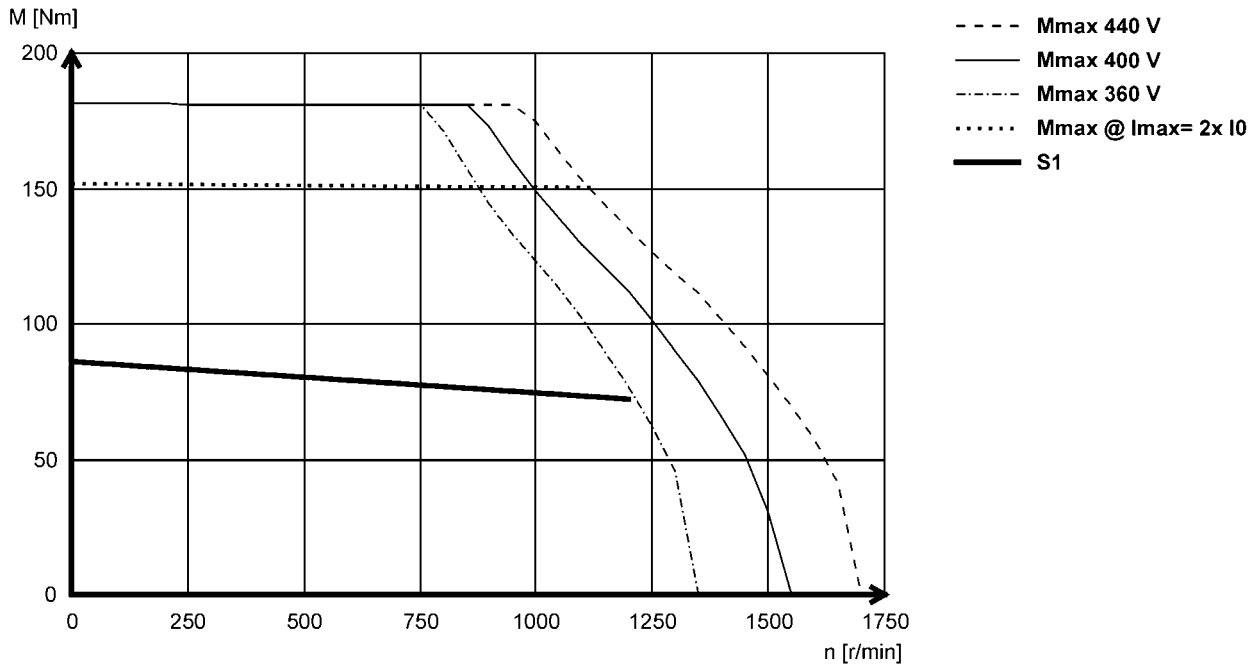

MCS19P14- (non-ventilated)

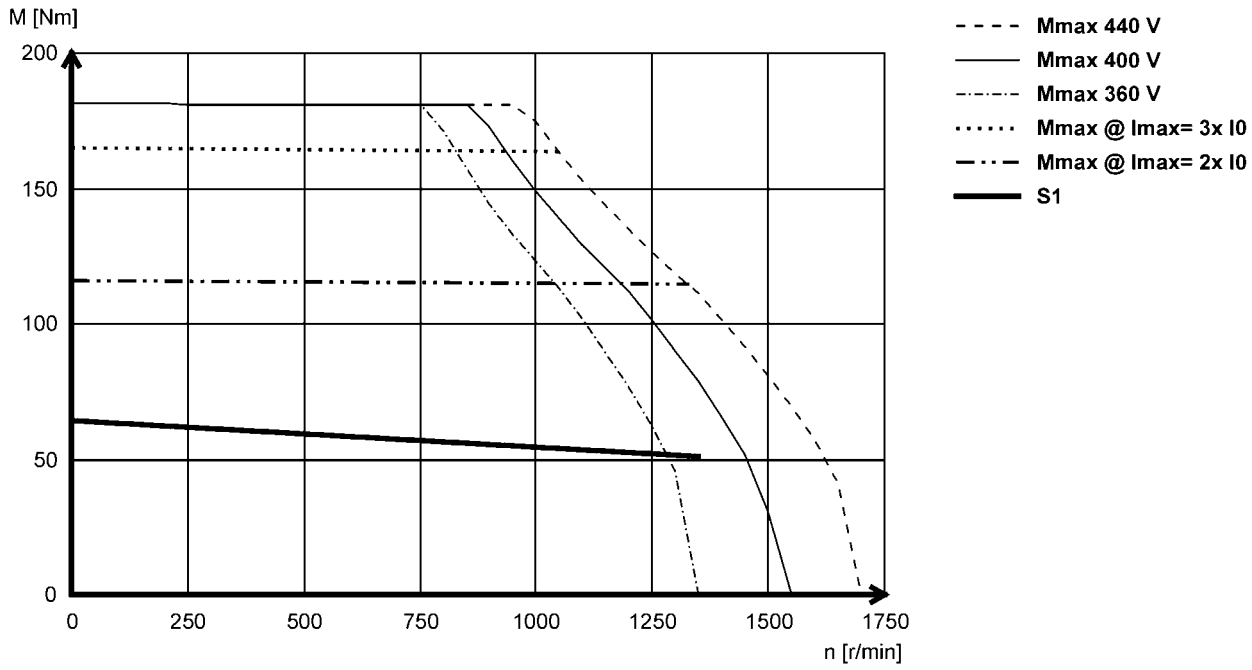



Torque characteristics

- The data applies to a mains connection voltage of 3 x 400 V.
- You can find further torque characteristics at **www.lenze.de/dsc**.

MCS19P29- (forced ventilated)

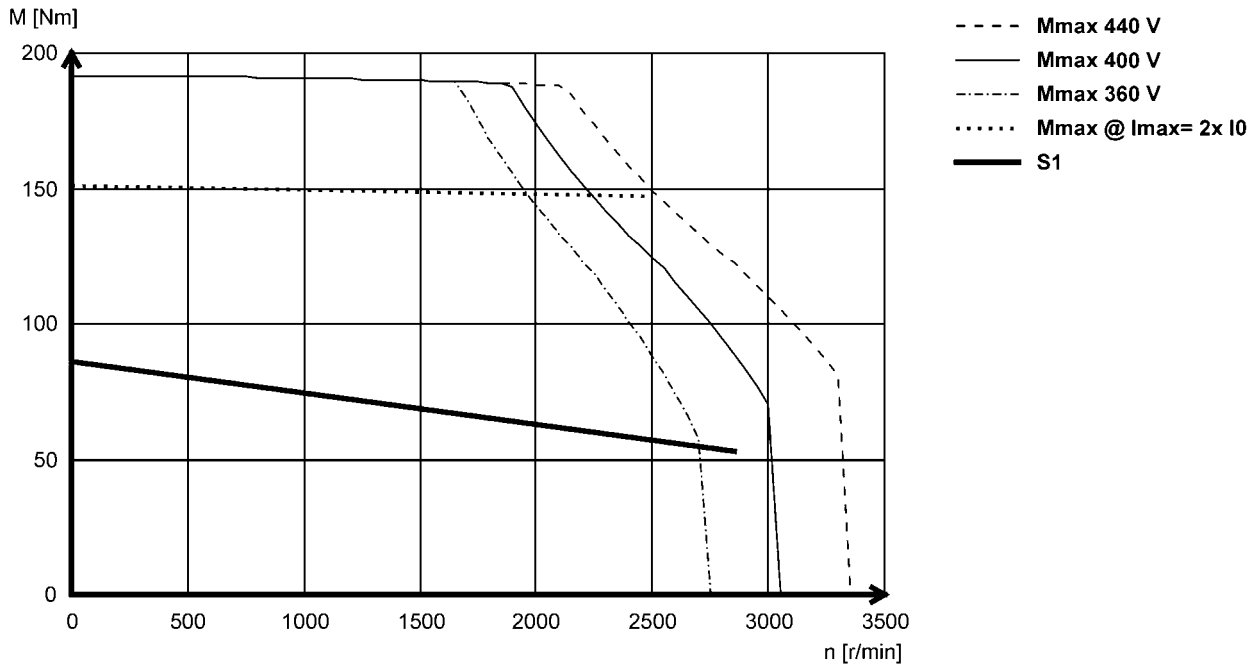

MCS19P30- (non-ventilated)

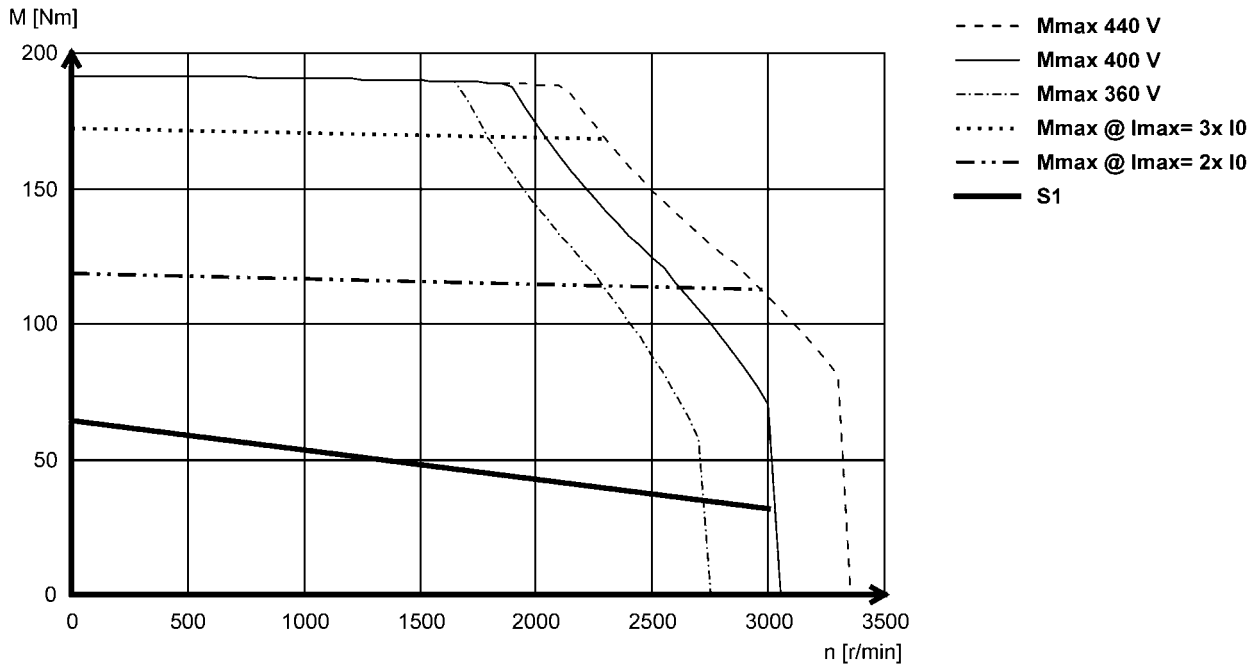



Torque characteristics

- The data applies to a mains connection voltage of 3 x 230 V.
- You can find further torque characteristics at **www.lenze.de/dsc**.

MCS06C41L (non-ventilated)

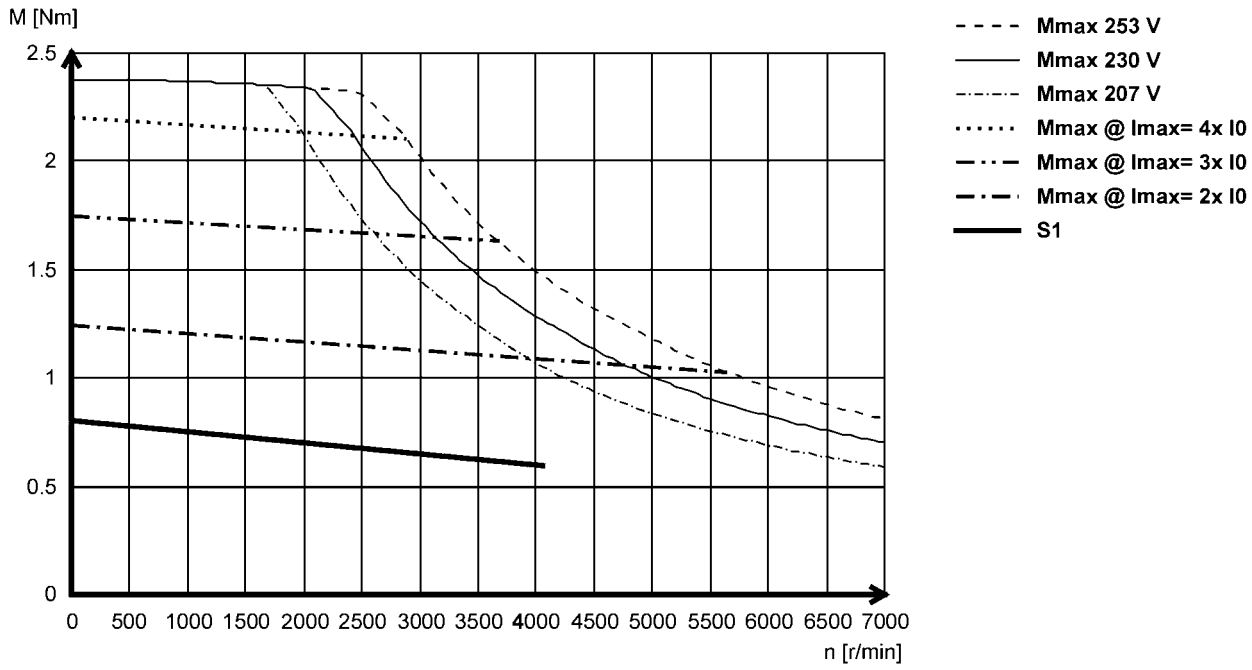

MCS06C60L (non-ventilated)

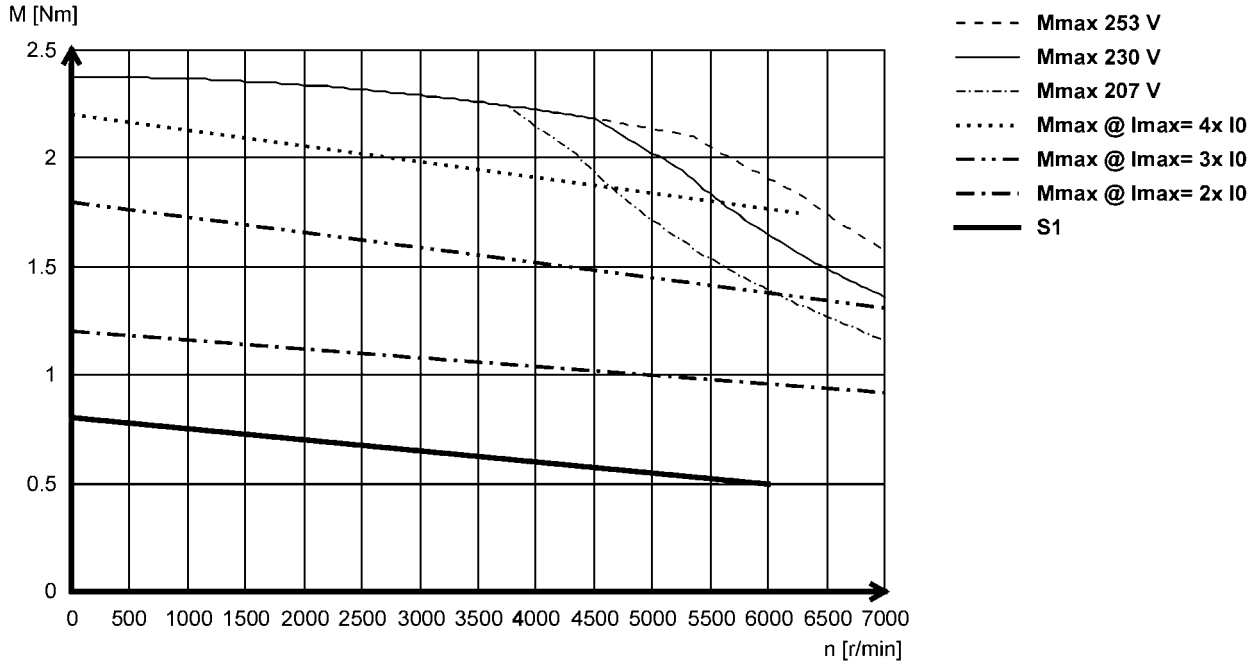



Torque characteristics

- The data applies to a mains connection voltage of 3 x 230 V.
- You can find further torque characteristics at **www.lenze.de/dsc**.

MCS06F41L (non-ventilated)

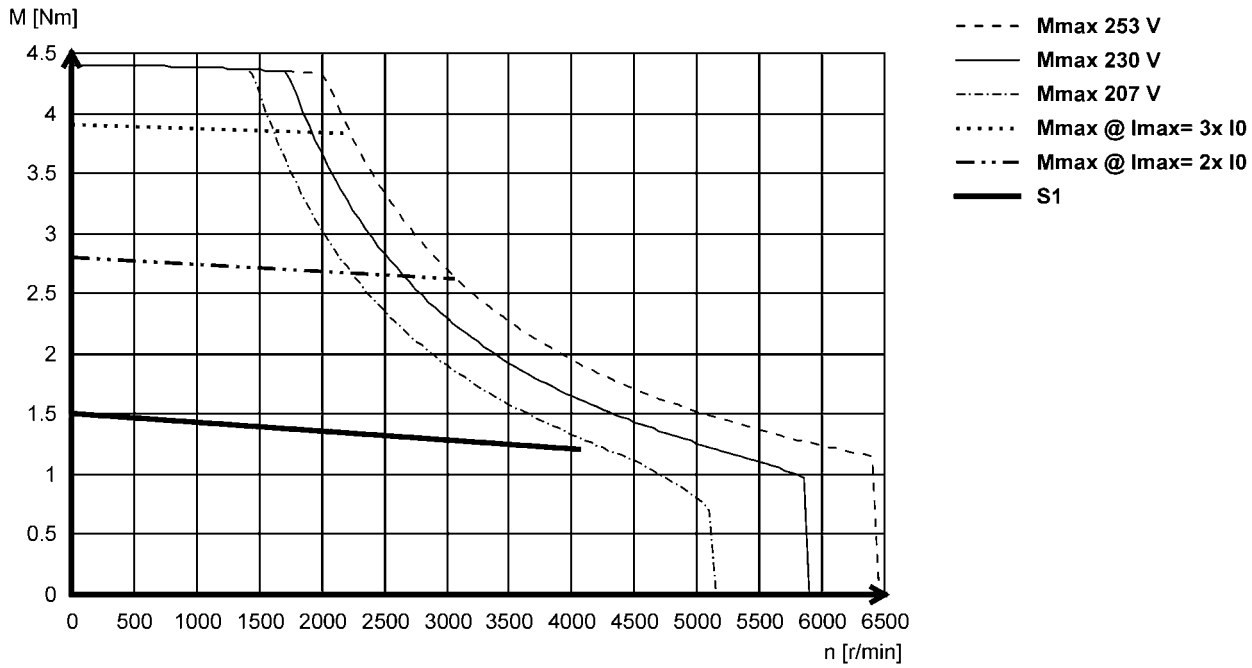

MCS06F60L (non-ventilated)

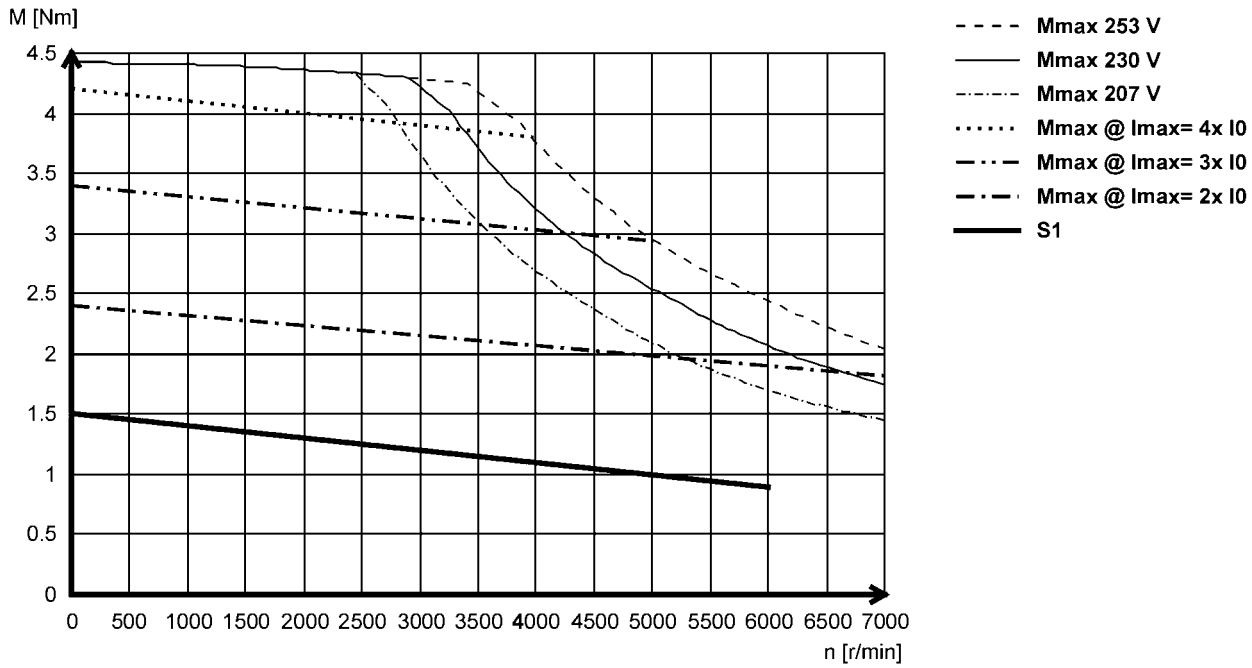



Torque characteristics

- The data applies to a mains connection voltage of 3 x 230 V.
- You can find further torque characteristics at **www.lenze.de/dsc**.

MCS06I41L (non-ventilated)

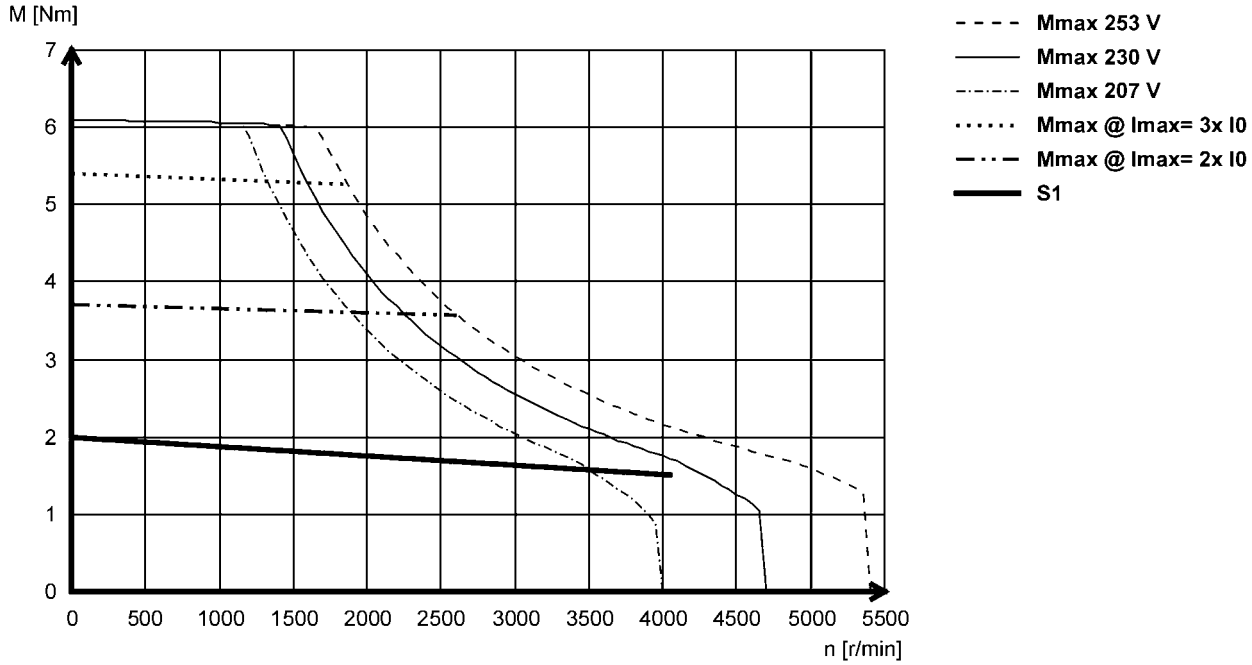

MCS06I60L (non-ventilated)

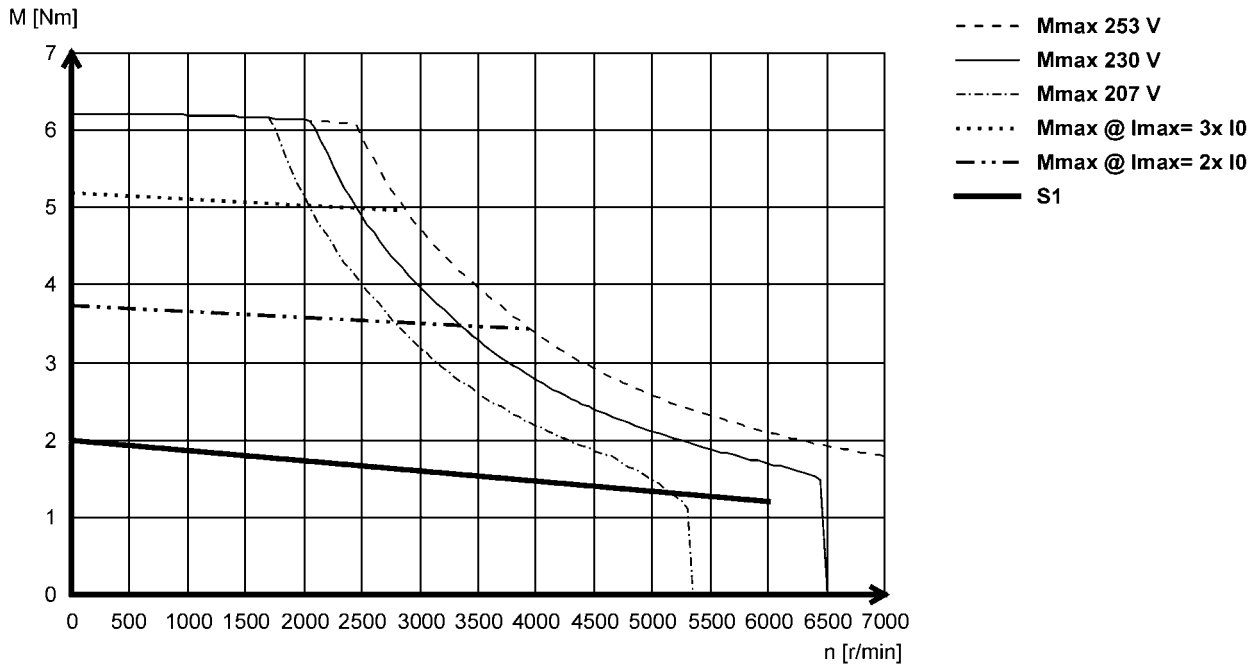



Torque characteristics

- The data applies to a mains connection voltage of 3 x 230 V.
- You can find further torque characteristics at **www.lenze.de/dsc**.

MCS09D41L (non-ventilated)

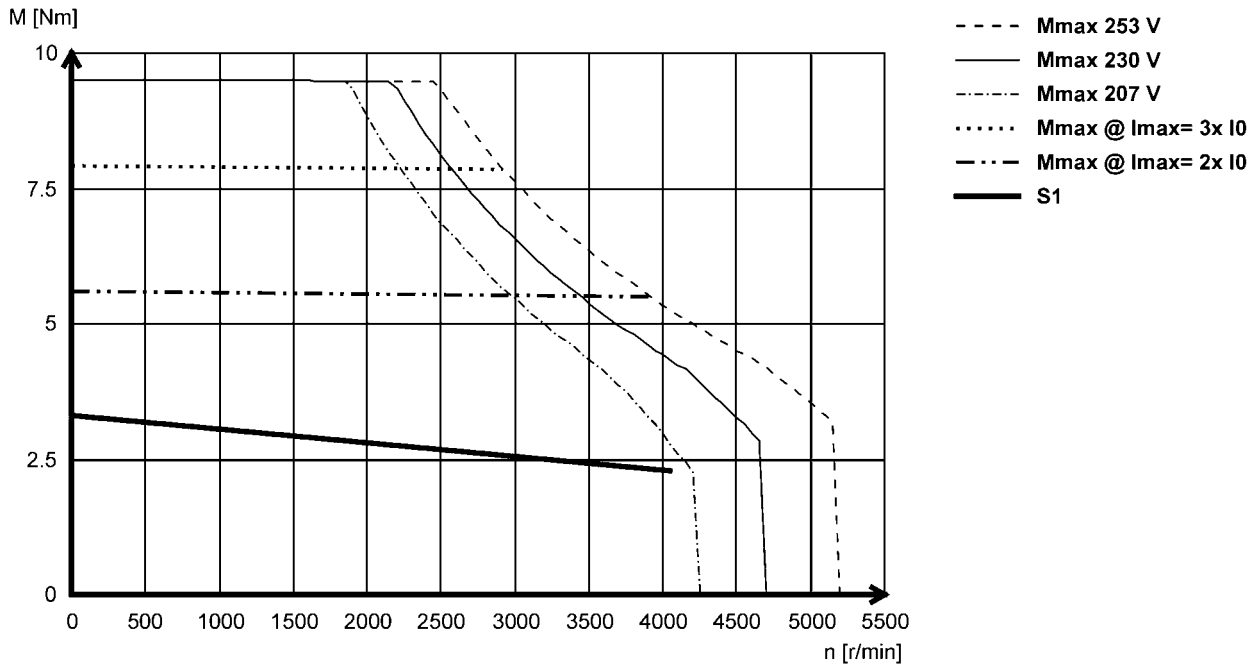

MCS09D60L (non-ventilated)

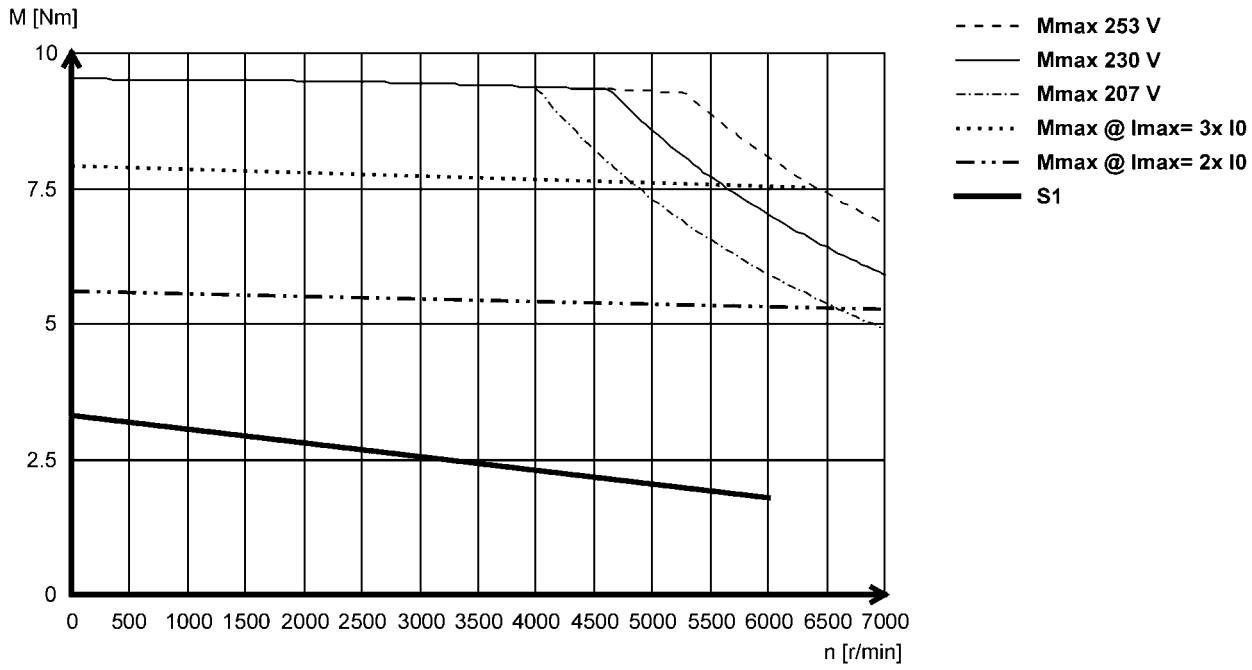



Torque characteristics

- The data applies to a mains connection voltage of 3 x 230 V.
- You can find further torque characteristics at **www.lenze.de/dsc**.

MCS09F38L (non-ventilated)

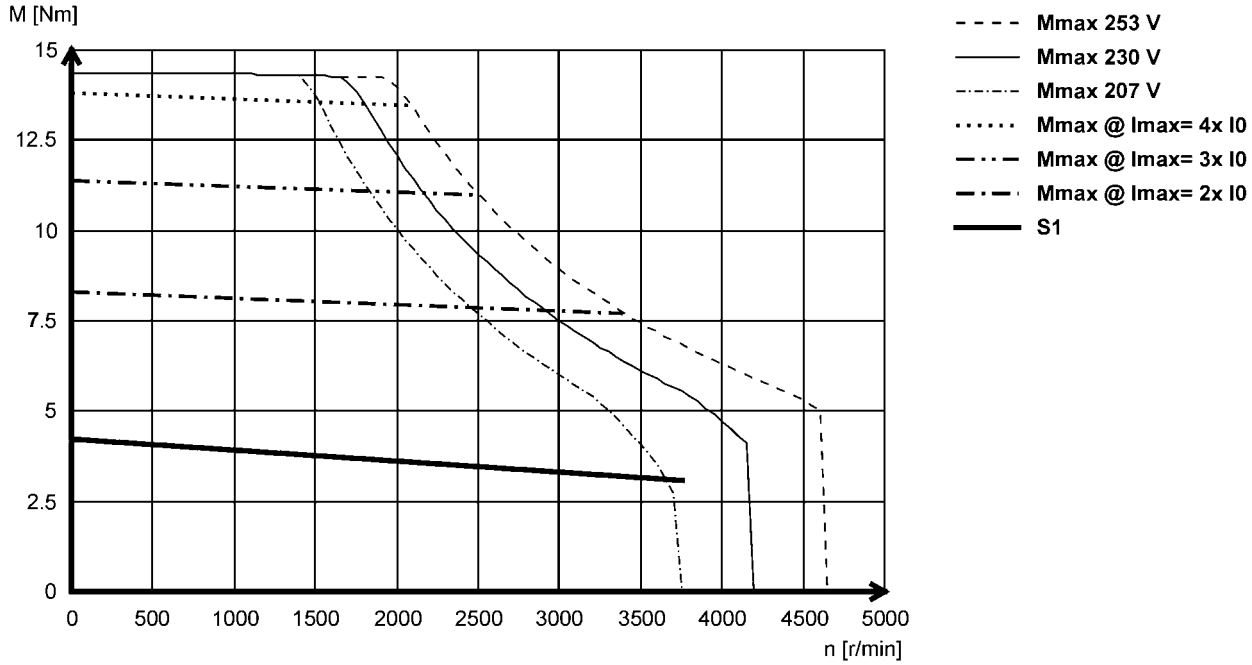

MCS09F60L (non-ventilated)

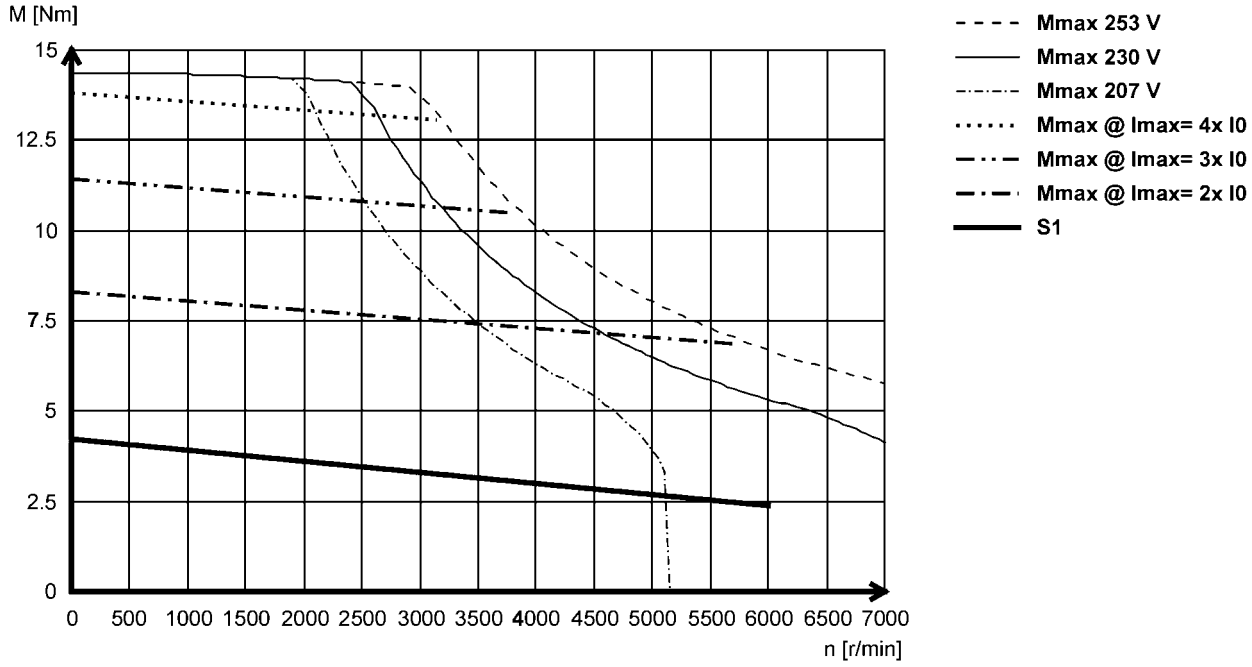



Torque characteristics

- The data applies to a mains connection voltage of 3 x 230 V.
- You can find further torque characteristics at **www.lenze.de/dsc**.

MCS09H41L (non-ventilated)

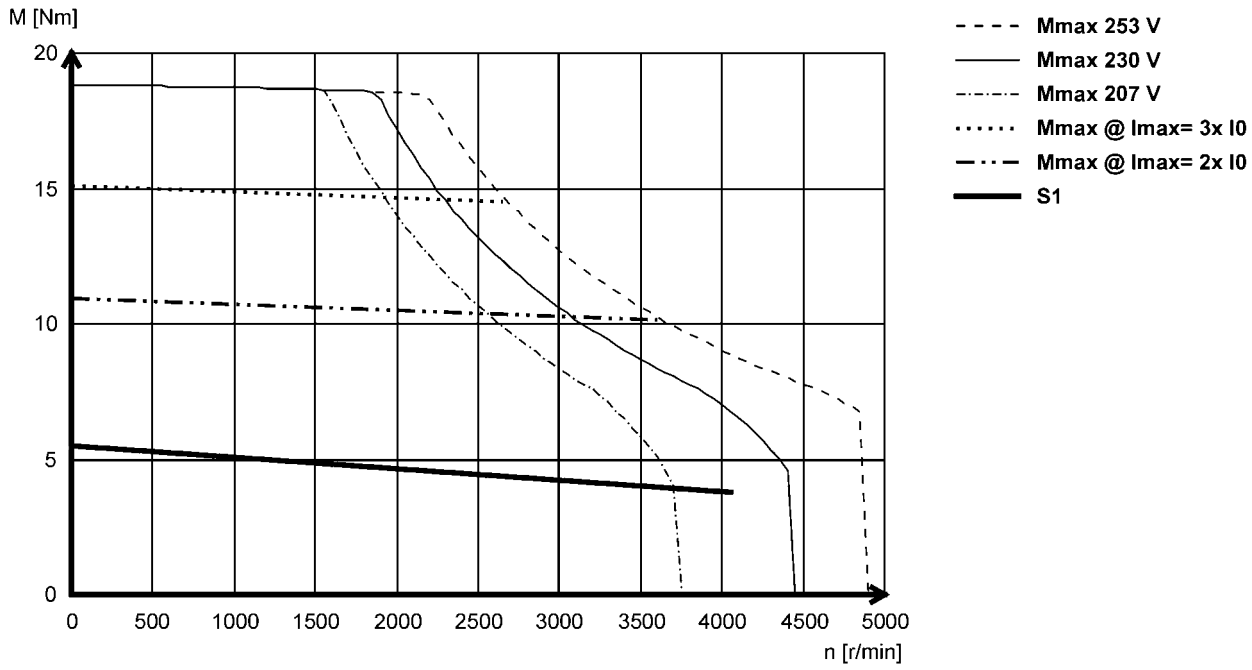

MCS09H60L (non-ventilated)

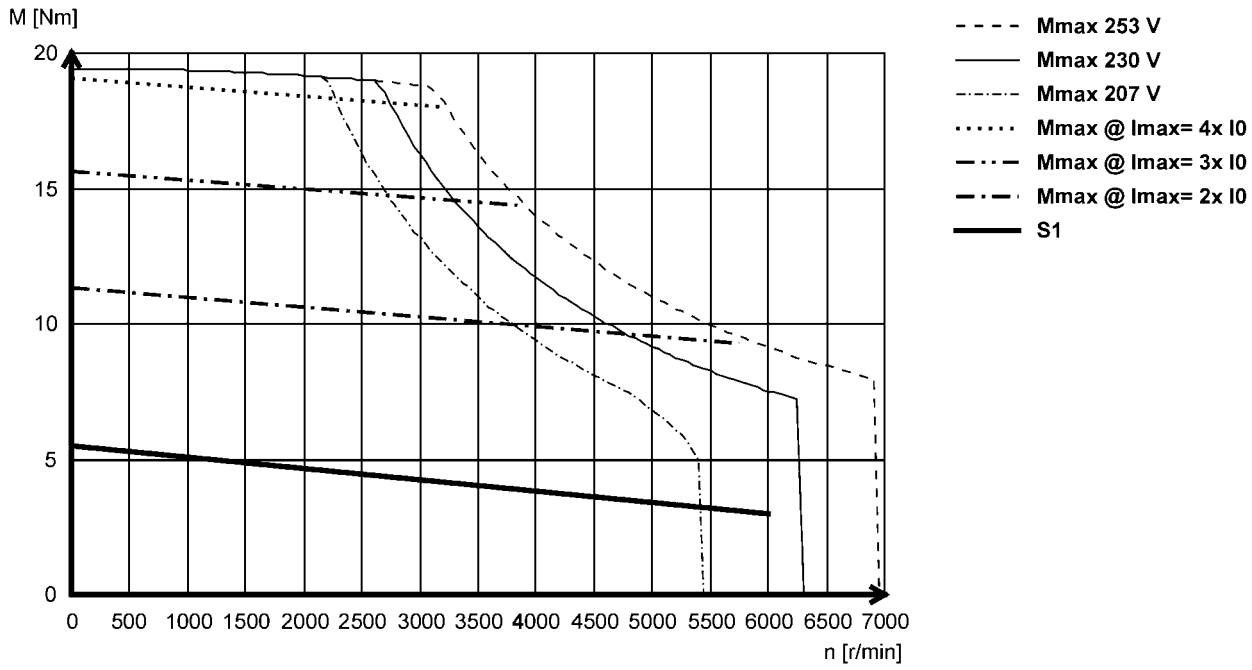



Torque characteristics

- The data applies to a mains connection voltage of 3 x 230 V.
- You can find further torque characteristics at **www.lenze.de/dsc**.

MCS09L41L (non-ventilated)

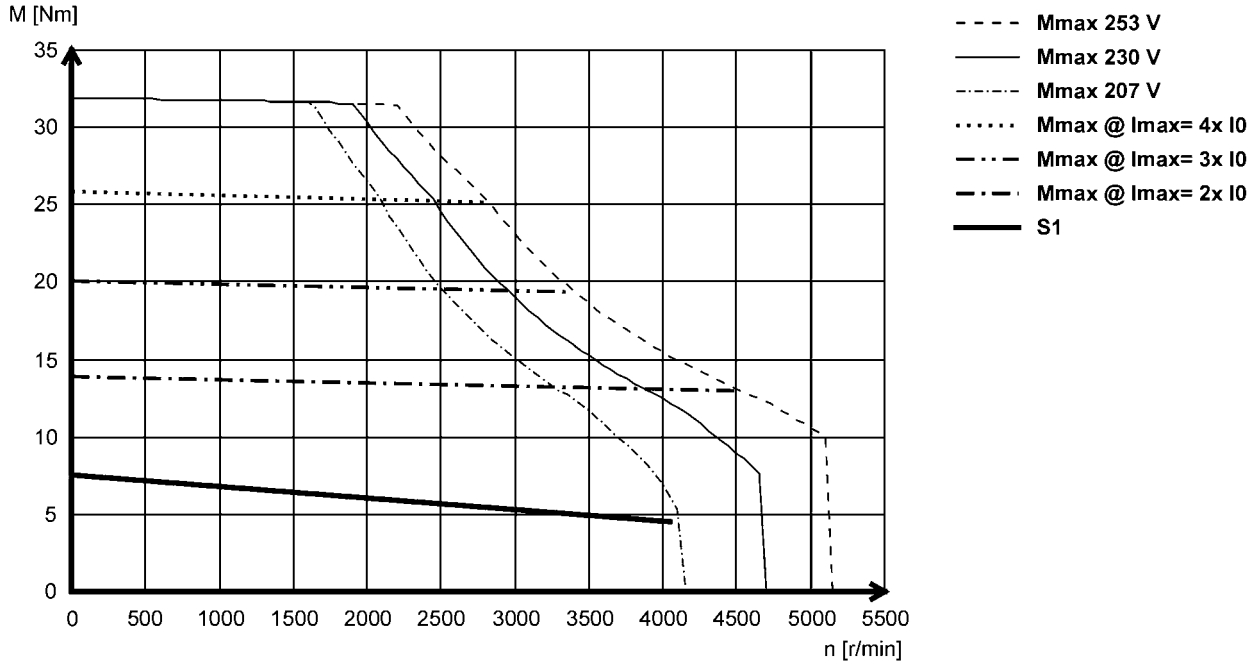



Torque characteristics

- The data applies to a mains connection voltage of 3 x 230 V.
- You can find further torque characteristics at **www.lenze.de/dsc**.

MCS12D20L (non-ventilated)

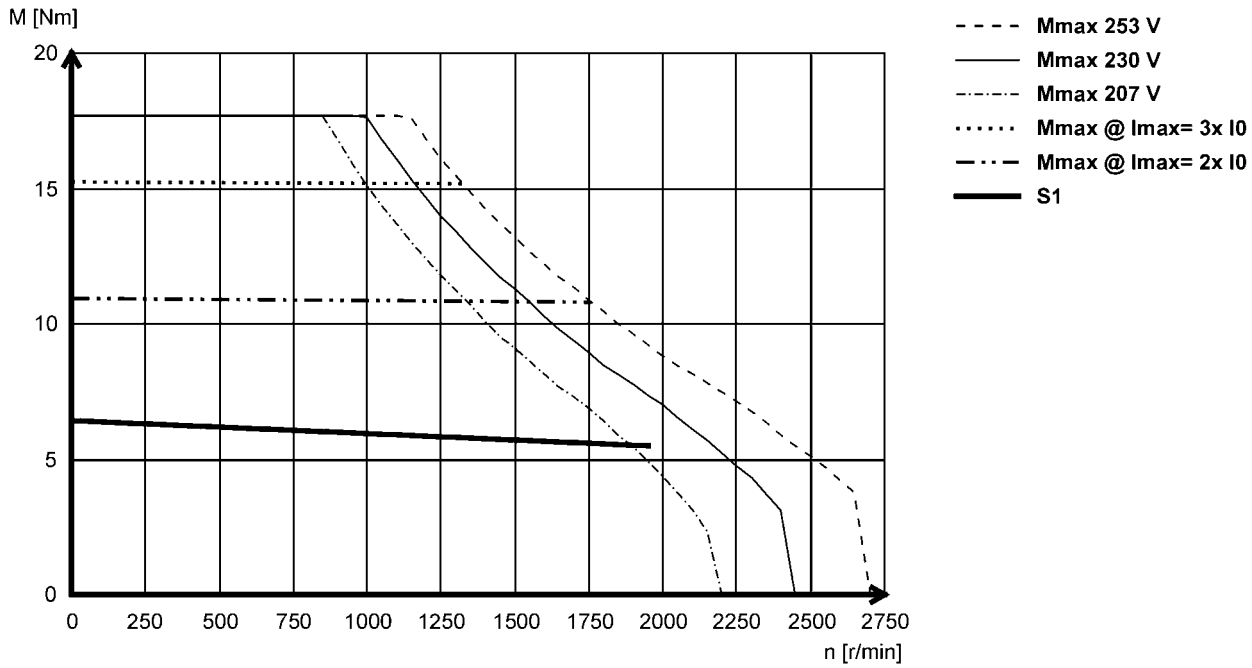

MCS12D41L (non-ventilated)

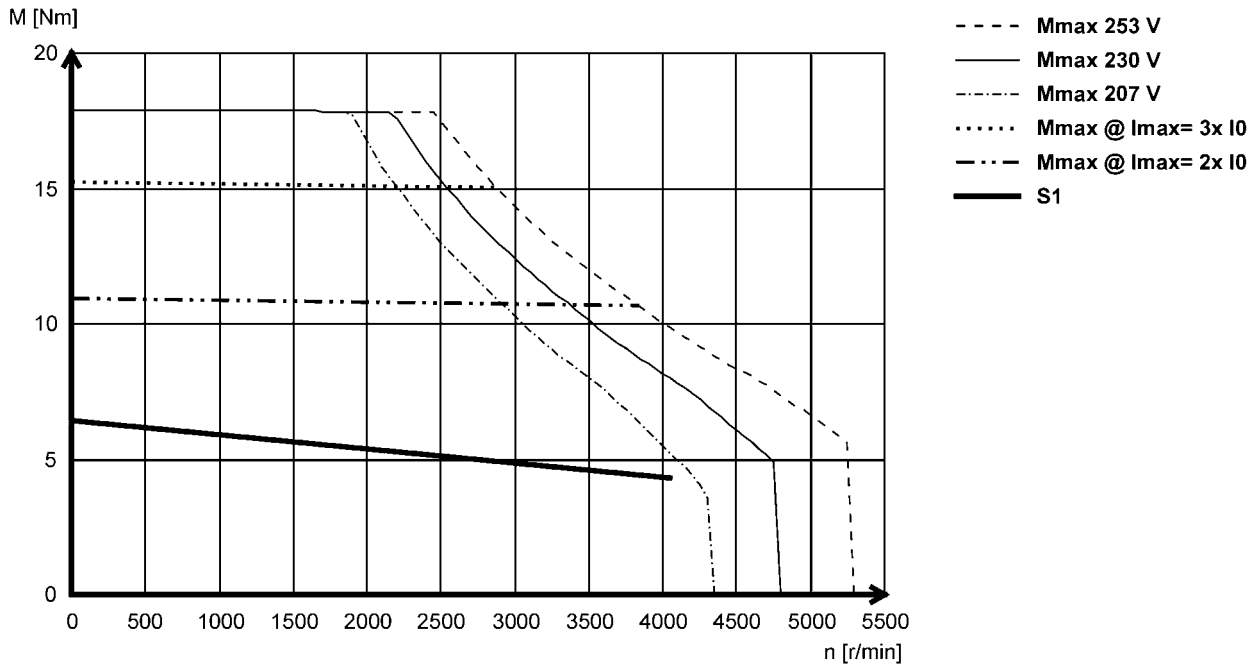



Torque characteristics

- The data applies to a mains connection voltage of 3 x 230 V.
- You can find further torque characteristics at **www.lenze.de/dsc**.

MCS12H15L (non-ventilated)

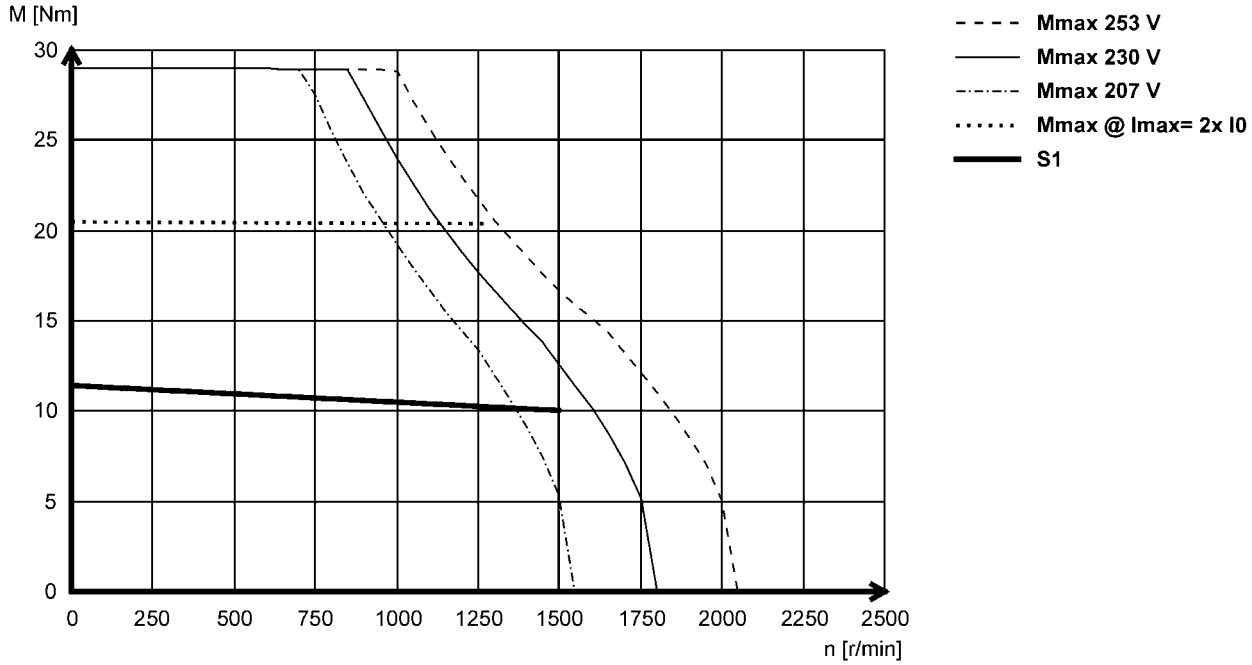

MCS12H30L- (non-ventilated)

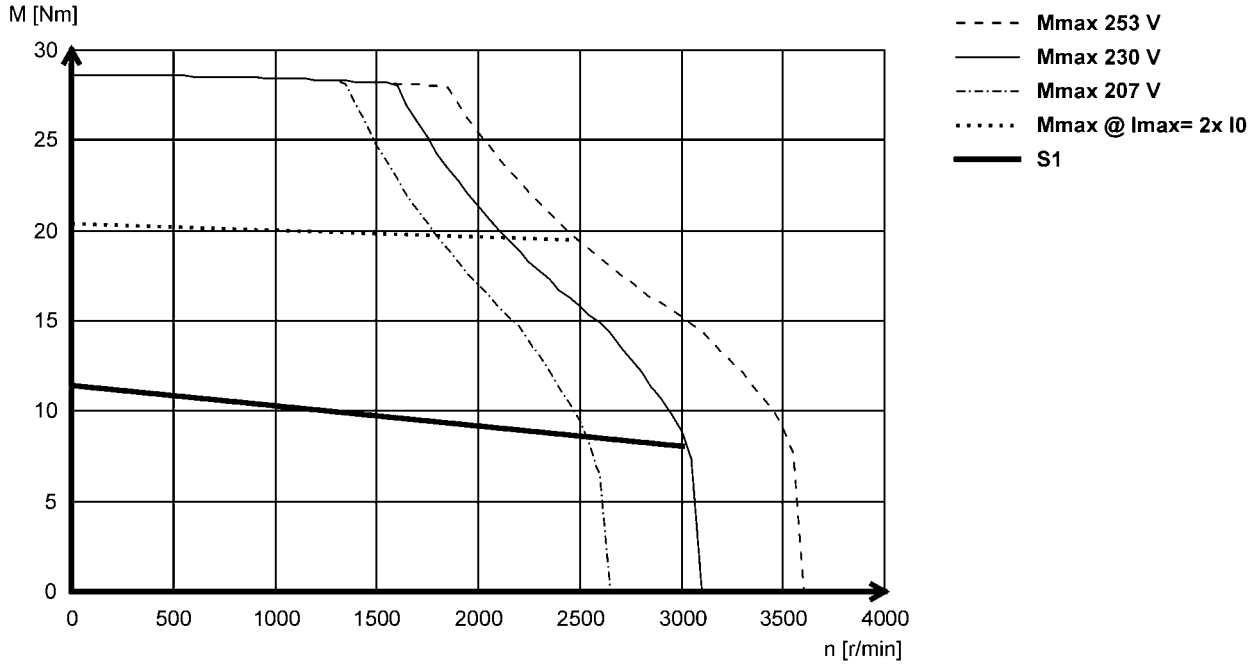



Torque characteristics

- The data applies to a mains connection voltage of 3 x 230 V.
- You can find further torque characteristics at **www.lenze.de/dsc**.

MCS12L20L (non-ventilated)

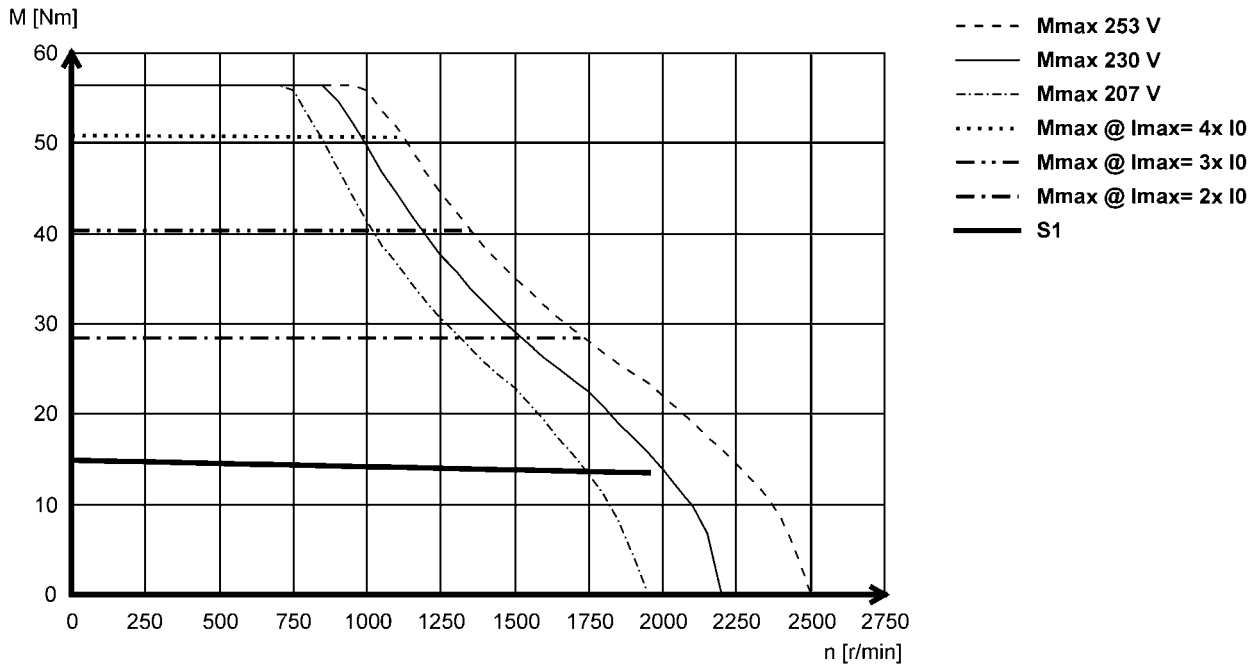



Dimensions, self-ventilated

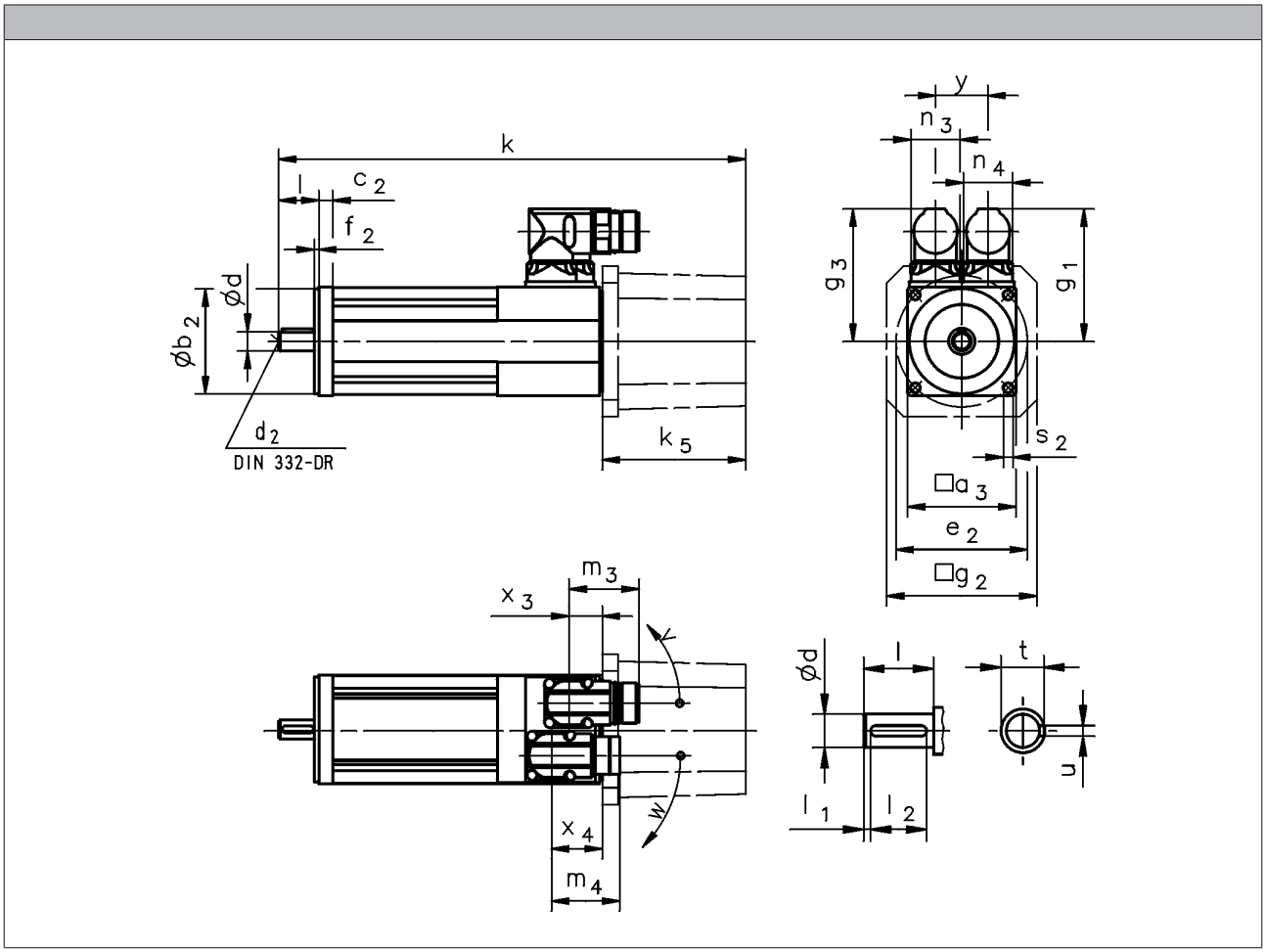

			MCS06C	MCS06F	MCS06I
R□0 / C40 B0	k	[mm]	155	185	215
R□0 / C40 P□	k	[mm]	174	204	233
SR□ / SV□ / E□□ B0	k	[mm]	237	266	297
SR□ / SV□ / E□□ P□	k	[mm]	255	285	315
SR□ / SV□ / E□□	k_5	[mm]	82.0		
	g_2	[mm]	86.0		
SKM BO	k	[mm]	190	220	250
SKM P□	k	[mm]	209	239	268
SKM	k_5	[mm]	35.0		
	g_2	[mm]	62.0		

► Speed / angle sensor: R□□ / C□□ / S□□ / E□□
► Brake: B0 / P□

6.11



Dimensions, self-ventilated

	g_1	g_3	x_3	x_4	m_3	m_4	n_3	n_4	y	v	w
	[mm]	[mm]	[mm]	[mm]	[mm]	[mm]	[mm]	[mm]	[mm]	[°]	[°]
MCS06	77	77	19	29	40	40	28	28	30	190	230

	d	d_2	l	l_1	l_2	u	t
	k6		-0.7 ... 0.3				
	[mm]	[mm]		[mm]	[mm]	[mm]	[mm]
MCS06	11	M4	23	2.0	18	4.0	12.5

	a_3	b_2	c_2	e_2	f_2	s_2
		j6				
	[mm]	[mm]	[mm]	[mm]	[mm]	[mm]
MCS06	62	60	8	75	2.5	5.5



Dimensions, self-ventilated

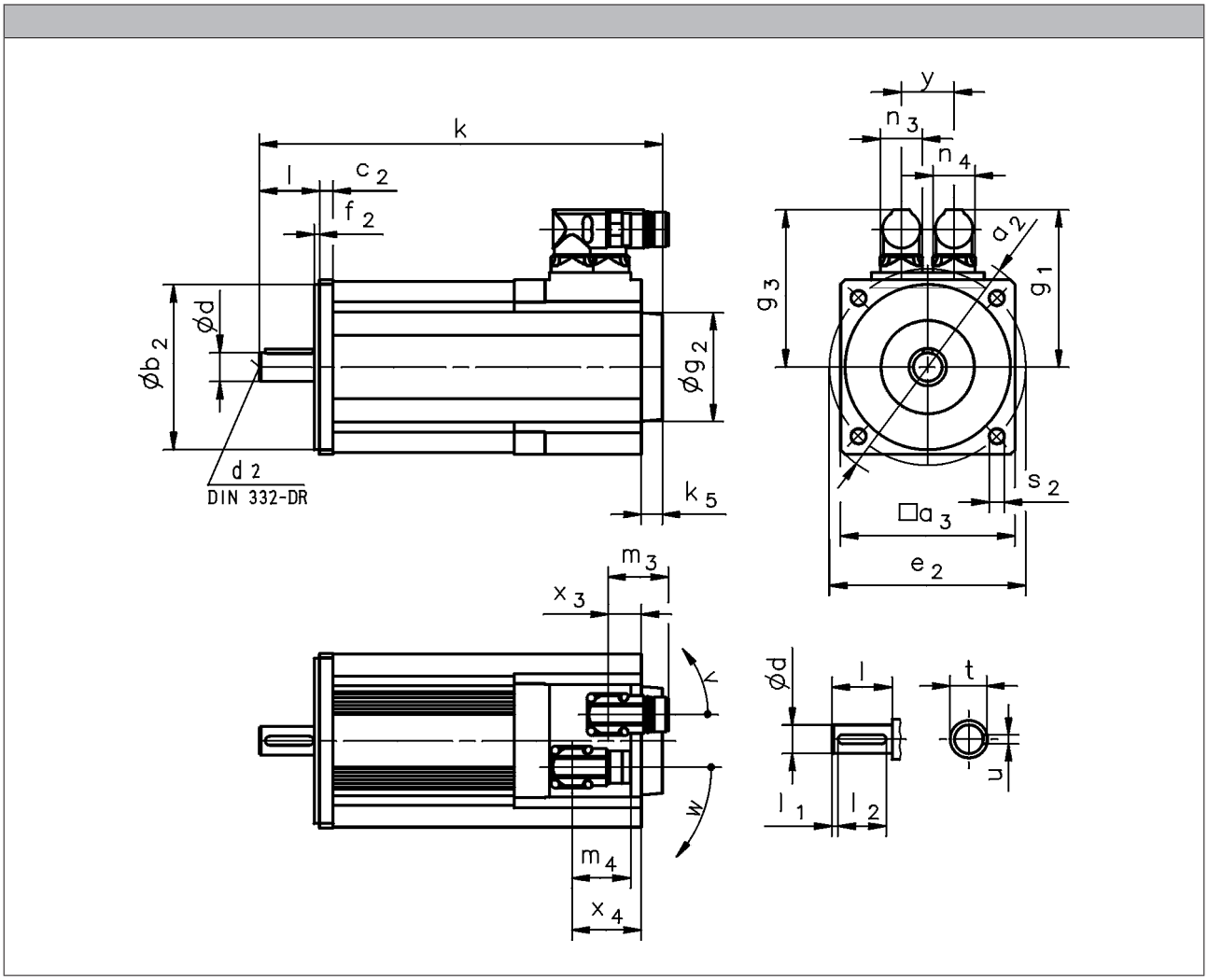

			MCS09D	MCS09F	MCS09H	MCS09L	MCS12D	MCS12H	MCS12L
R□0 / C40 B0	k	[mm]	213	233	253	293	228	268	308
R□0 / C40 P□	k	[mm]	233	253	273	313	248	288	328
R□0 / C40	k_5	[mm]	13				14		
	g_2	[mm]	67				72		
S□□ / E□□ B0	k	[mm]	264	284	304	344	277	317	357
S□□ / E□□ P□	k	[mm]	284	304	324	364	297	337	377
S□□ / E□□	k_5	[mm]	64				63		
	g_2	[mm]	81				89		

			MCS14D	MCS14H	MCS14L	MCS14P	MCS19F	MCS19J	MCS19P
R□0 / C40 B0	k	[mm]	251	291	331	371	280	320	380
R□0 / C40 P□	k	[mm]	279	319	359	399	314	364	424
R□0 / C40	k_5	[mm]	24				15		
	g_2	[mm]	78						
S□□ / E□□ B0	k	[mm]	301	341	381	421	329	369	429
S□□ / E□□ P□	k	[mm]	329	369	409	449	363	413	473
S□□ / E□□	k_5	[mm]	74				64		
	g_2	[mm]	101						

- Speed / angle sensor: R□□ / C□□ / S□□ / E□□
- Brake: B0 / P□



Dimensions, self-ventilated

	g_1	g_3	x_3	x_4	m_3	m_4	n_3	n_4	y	v	w
	[mm]	[mm]	[mm]	[mm]	[mm]	[mm]	[mm]	[mm]	[mm]	[°]	[°]
MCS09	90	90	20	44	40	40	28	28	35	195	260
MCS12	105	105	22	46							

	g_1	g_3	x_3	x_4	m_3	m_4	n_3	n_4	y	v	w
	[mm]	[mm]	[mm]	[mm]	[mm]	[mm]	[mm]	[mm]	[mm]	[°]	[°]
MCS14D15-	117	117	24	48	40	40	28	28	35	195	260
MCS14D36-											
MCS14H15-											
MCS14H32-											
MCS14L15-											
MCS14L32-	146	126	29	36		75		45		180	205
MCS14P14-	117	117	24	48		40		28		195	260
MCS14P32-	146	126	29	36		75		45		180	205
MCS19F14-	142	142	24 51 [1)]	48 75 [1)]		40		28		195	260
MCS19F30-	171	151	29 56 [1)]	36 63 [1)]		75		45		180	205
MCS19J14-	142	142	24 51 [1)]	48 75 [1)]		40		28		195	260
MCS19J30-	171	151	29 56 [1)]	36 63 [1)]		75		45		180	205
MCS19P14-	142	142	24 51 [1)]	48 75 [1)]		40		28		195	260
MCS19P30-	171	151	29 56 [1)]	36 63 [1)]		75		45		180	205

	d	d_2	l	l_1	l_2	u	t
	k6		-0.7 ... 0.3				
	[mm]	[mm]		[mm]	[mm]	[mm]	[mm]
MCS09	14	M5	30	2.5	25	5.0	16.0
MCS12	19	M6	40	4.0	32	6.0	21.5
MCS14	24	M8	50	5.0	40	8.0	27.0
MCS19	28	M10	60		50		31.0

	a_2	a_3	b_2	c_2	e_2	f_2	s_2
			j6				
	[mm]	[mm]	[mm]	[mm]	[mm]	[mm]	[mm]
MCS09	120	89	80	8	100	3.0	7.0
MCS12	160	116	110	9	130	3.5	10.0
MCS14	188	143	130	13	165		12.0
MCS19	250	192	180	11	215	4.0	14.0

[1)] On version with brake (P□)



Dimensions, forced ventilated

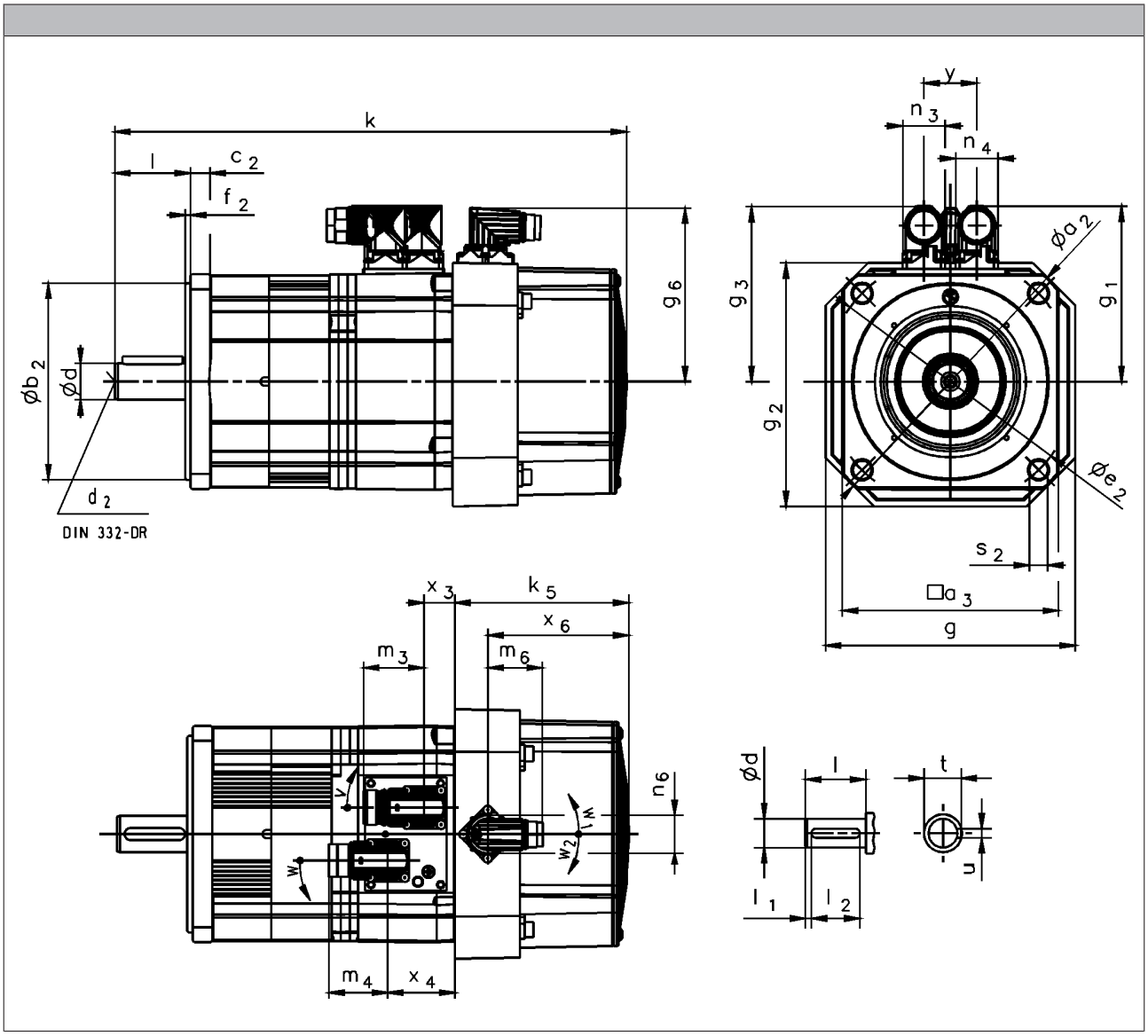

			MCS12D	MCS12H	MCS12L	MCS14D	MCS14H	MCS14L	MCS14P	MCS19F	MCS19J	MCS19P
R□0 / C40 B0	k	[mm]	301	341	381	339	379	419	459	387	427	487
R□0 / C40 P□	k	[mm]	321	361	401	368	408	448	488	421	471	531
R□0 / C40	k_5	[mm]	92			115				126		
S□□ / E□□ B0	k	[mm]	344	384	424	392	432	472	512	425	465	525
S□□ / E□□ P□	k	[mm]	364	404	444	421	461	501	541	459	509	569
S□□ / E□□	k_5	[mm]	135			169				165		
	g	[mm]	140			167				212		
	g_2	[mm]	140			163				210		

► Speed / angle sensor: R□□ / C□□ / S□□ / E□□
► Brake: B0 / P□



Dimensions, forced ventilated

	g_1	g_3	g_6	x_3	x_4	x_6	m_3	m_4	m_6	n_3	n_4	n_6	y	v	w	w_1	w_2
	[mm]	[mm]	[mm]	[mm]	[mm]	[mm]	[mm]	[mm]	[mm]	[mm]	[mm]	[mm]	[mm]	[°]	[°]	[°]	[°]
MCS12D17	105	105	107	16	40	67	40	40	37	28	28	28	35	160	160	120	130
MCS12D35																	
MCS12H14																	
MCS12H34																	
MCS12L17																	
MCS12L39																	
MCS14D14	117	117	115	20	44	93											
MCS14D30																	
MCS14H12																	
MCS14H28	146	126		24	31			75			45						
MCS14L14	117	117		20	44			40			28						
MCS14L30	146	126		24	31			75			45						
MCS14P11	117	117		20	44			40			28						
MCS14P26	146	126		24	31			75			45						
MCS19F12	142	142	142	19 46 [1]	43 70 [1]	96		40			28						
MCS19F29	171	151		24 51 [1]	31 58 [1]			75			45						
MCS19J12																	
MCS19J29																	
MCS19P12																	
MCS19P29																	

	d	d_2	l	l_1	l_2	u	t
	k6		-0.7 ... 0.3				
	[mm]	[mm]		[mm]	[mm]	[mm]	[mm]
MCS12	19	M6	40	4.0	32	6.0	21.5
MCS14	24	M8	50	5.0	40	8.0	27.0
MCS19	28	M10	60		50		31.0

	a_2	a_3	b_2	c_2	e_2	f_2	s_2
			j6				
	[mm]	[mm]	[mm]	[mm]	[mm]	[mm]	[mm]
MCS12	160	116	110	9	130	3.5	10.0
MCS14	188	143	130	13	165		12.0
MCS19	250	192	180	11	215	4.0	14.0

[1] On version with brake (P□)





Permanent magnet holding brake

The synchronous servo motor can be fitted with integral permanent magnet holding brakes.
In the case of permanent magnet brakes, the rated torque applies solely as holding torque at standstill. This is due to the nature of their design. During braking from full motor speed, e.g. in the event of emergency stops, the braking torque is significantly reduced.
As such, they may not be used as safety elements (particularly with lifting axes) without additional measures being implemented.
The brakes are activated when the supply voltage is disconnected (closed-circuit principle). When using the brakes purely as holding brakes, virtually no wear occurs on the friction surfaces.

For traversing axes, adherence to the permissible load/brake motor (J_L / J_{MB}) moment of inertia ensures that the permissible maximum switching rate of the brake will not be exceeded and at least 2,000 emergency stop functions can be performed from a speed of 3,000 rpm.
For lifting axes, the load torque resulting from the weight acts additionally. In this case the specifications for J_L / J_{MB} do not apply.

Caution:
The brakes used are not safety brakes in the sense that a reduction in torque may arise as a result of disruptive factors that cannot be influenced, e.g. oil ingress.

The ohmic voltage drop along the cable must be taken into consideration in long motor supply cables and must be compensated for by a higher voltage at the line input.

The following applies for Lenze system cables:

$$U[V] = U_B[V] + 0.08\frac{[V]}{[A]\cdot[m]}\cdot l_{Lg}[m]\cdot I_B[A]$$

If no suitable voltage (incorrect value, incorrect polarity) is applied to the brake, the brake will be applied and can be overheated and destroyed by the motor continuing to rotate.
The shortest switching times of the brakes are achieved by DC switching of the voltage. A spark suppressor is required to suppress interference and to increase the service life of the relay contacts here.



Permanent magnet holding brake



Permanent magnet holding brake

Rated data with standard braking torque

	$U_{N, DC}$ [3, 5]	M_N	M_N	M_{av}	I_N [2]	J	t_1 [1]	t_2 [1]	Q_E [4]	m	J_{MB}	J_L/J_{MB}
		20 °C	120 °C	120 °C								
	[V]	[Nm]	[Nm]	[Nm]	[A]	[kgcm²]	[ms]	[ms]	[J]	[kg]	[kgcm²]	
MCS06C	24	2.20	2.00	0.60	0.34	0.12	15.0	30.0	30.0	0.30	0.26	22.1
MCS06F											0.34	16.6
MCS06I											0.42	13.3
MCS09D		8.00	6.00	4.50	0.65	1.07	20.0	40.0	400	0.80	2.17	36.4
MCS09F											2.57	30.5
MCS09H											2.97	26.3
MCS09L											3.87	19.9
MCS12D		12.0	10.0	7.00			13.0	43.0		0.90	5.07	15.0
MCS12H											8.40	8.70
MCS12L											11.7	5.90
MCS14D		22.0	18.0	8.00	0.88	3.20	15.0	150	640	1.90	11.3	10.5
MCS14H											17.4	6.50
MCS14L											26.6	3.90
MCS14P											37.9	2.40
MCS19F		37.0	32.0	15.0	0.93	12.4	96.0	113	2350	3.10	77.4	5.20

Rated data with increased braking torque

	$U_{N, DC}$ [3, 5]	M_N	M_N	M_{av}	I_N [2]	J	t_1 [1]	t_2 [1]	Q_E [4]	m	J_{MB}	J_L/J_{MB}
		20 °C	120 °C	120 °C								
	[V]	[Nm]	[Nm]	[Nm]	[A]	[kgcm²]	[ms]	[ms]	[J]	[kg]	[kgcm²]	
MCS09D	24	12.0	10.0	7.00	0.65	1.07	20.0	40.0	400	0.80	2.17	36.4
MCS09F											2.57	30.5
MCS09H											2.97	26.3
MCS09L											3.87	19.9
MCS12D		24.0	19.0	12.0	0.71	3.13	16.0	90.0	890	1.20	7.10	24.3
MCS12H											10.4	16.3
MCS12L											13.7	12.1
MCS14D		37.0	32.0	15.0	0.93	12.4	96.0	113	2350	3.10	20.5	22.2
MCS14H											26.6	16.9
MCS14L											35.8	12.3
MCS14P											47.1	9.10
MCS19J		100	80.0	43.0	1.29	30.0	30.0	90.0	2100	4.30	135	2.20
MCS19P											190	1.20

[1] Engagement and disengagement times are valid for rated voltage (± 0 %) and protective circuit for brakes with varistor for DC switching. The times may increase without a protective circuit.
[2] The currents are the maximum values when the brake is cold (value used for dimensioning the current supply). The values for a motor at operating temperature are considerably lower.
[3] With 24V DC brake: smoothed DC voltage, ripple ≤1 %.
[4] Maximum switching energy per emergency stop at n = 3000 r/min for at least 2000 emergency stops.
[5] Voltage tolerance: -10% to +5%



Resolver

Stator-fed resolver with two stator windings offset by 90° and one rotor winding with transformer winding.

Speed/angle sensor					
	1)			RS0	RV0
Product key					
				RS0	RV03
Resolution					
Angle			[']	0.80	
Accuracy					
			[']	-10 ... 10	
Absolute positioning					
				1 revolution	
Max. speed					
	n_{max}		[r/min]	8000	
Max. input voltage					
DC	$U_{in,max}$		[V]	10.0	
Max. input frequency					
	$f_{in,max}$		[kHz]	4.00	
Ratio					
Stator / rotor		± 5 %		0.30	
Rotor impedance					
	Z_{ro}		[Ω]	51 + j90	
Stator impedance					
	Z_{so}		[Ω]	102 + j150	
Impedance					
	Z_{rs}		[Ω]	44 + j76	
Min. insulation resistance					
At DC 500 V	R		[MΩ]	10.0	
Number of pole pairs					
				1	
Max. angle error					
			[']	-10 ... 10	
Inverter assignment					
				E84AVTC E94A ECS EVS93	

1) 6 - Product key > speed/angle sensor

Speed-dependent safety functions

Suitable for safety function				
			No	Yes
Max. permissible angular acceleration				
MCS06	α	[rad/s²]		56000
MCS09 ... MCS19 2)	α	[rad/s²]		19000
Functional safety				
IEC 61508				SIL3
EN 13849-1				Up to Performance Level e

2) 10 - Single encoder concepts with resolvers



Incremental encoder and SinCos absolute value encoder

Encoder type			TTL incremental	SinCos absolute value		
Speed/angle sensor						
	1)		C40	EQI	SRS	SVS
Product key						
			IK4096-5V-T	AM32-5V-E	AS1024-8V-H	AS1024-8V-K2
Encoder type						
			Single-turn	Multi-turn	Single-turn	
Pulses						
			4096	32	1024	
Output signals						
			TTL	1 Vss		
Interfaces						
				EnDat	Hiperface	
Absolute revolutions						
			0	4096	1	
Resolution						
Angle 2)		[°]	1.30	0.40		
Accuracy						
		[°]	-1 ... 1	-5 ... 5	-0.8 ... 0.8	
Min. input voltage						
DC	$U_{in,min}$	[V]	4.50	4.75	7.00	
Max. input voltage						
DC	$U_{in,max}$	[V]	5.50	5.25	12.0	
Max. speed						
	n_{max}	[r/min]	7324	12000	6000	
Max. current consumption						
	I_{max}	[A]	0.075	0.17	0.080	
Limit frequency						
	f_{max}	[kHz]	500	6.00	200	
Inverter assignment			E94P	E94A	E84AVTC E94A ECS EVS93	

1) 6 - Product key > speed/angle sensor

2) Inverter-dependent.

Speed-dependent safety functions

Suitable for safety function			No	No	No	Yes
Max. permissible angular acceleration						
MCS06	α	[rad/s²]				970000
MCS09 ... MCS19	α	[rad/s²]				240000
Functional safety						
IEC 61508						SIL2
EN 13849-1						Up to Performance Level d



Incremental encoder and SinCos absolute value encoder

Encoder type			SinCos absolute value				
Speed/angle sensor			SKM	SRM	SVM	ECN	EQN
Product key			AM128-8V-H	AM1024-8V-H	AM1024-8V-K2	AS2048-5V-E	AM2048-5V-E
Encoder type			Multi-turn			Single-turn	Multi-turn
Pulses			128	1024		2048	
Output signals			1 Vss				
Interfaces			Hiperface			EnDat	
Absolute revolutions			4096			1	4096
Resolution							
Angle		[°]	0.40				
Accuracy							
		[°]	-1.3 ... 1.3	-0.8 ... 0.8		-0.6 ... 0.6	
Min. input voltage							
DC	$U_{in,min}$	[V]	7.00			4.75	
Max. input voltage							
DC	$U_{in,max}$	[V]	12.0			5.25	
Max. speed							
	n_{max}	[r/min]	9000	6000		12000	
Max. current consumption							
	I_{max}	[A]	0.060	0.080		0.15	0.25
Limit frequency							
	f_{max}	[kHz]	200				
Inverter assignment			E84AVTC E94A ECS EVS93			E94A	

[1)] Inverter-dependent.

Speed-dependent safety functions

Suitable for safety function			No	No	Yes	No	No
Max. permissible angular acceleration							
MCS06	α	[rad/s²]			970000		
MCS09 ... MCS19	α	[rad/s²]			240000		
Functional safety							
IEC 61508					SIL2		
EN 13849-1					Up to Performance Level d		



Blowers

Rated data for 50 Hz

		Enclosure	Number of phases					
				U_{min}	U_{max}	$U_{N, AC}$	P_N	I_N
				[V]	[V]	[V]	[kW]	[A]
MCS12	F10	IP54	1	210	240	230	0.019	0.12
	F50			104	122	115	0.018	0.22
MCS14	F10			210	240	230	0.040	0.25
	F50			104	122	115		0.53
MCS19	F10			210	240	230	0.060	0.26
	F50			104	122	115	0.047	0.45

Rated data for 60 Hz

		Enclosure	Number of phases					
				U_{min}	U_{max}	$U_{N, AC}$	P_N	I_N
				[V]	[V]	[V]	[kW]	[A]
MCS12	F10	IP54	1	210	240	230	0.019	0.12
	F50			104	122	115	0.018	0.22
MCS14	F10			210	240	230	0.040	0.25
	F50			104	122	115		0.53
MCS19	F10			210	240	230	0.060	0.26
	F50			104	122	115	0.047	0.45



Temperature monitoring

The thermal sensors used in the MCS motors continuously monitor the motor temperature. The temperature signal is transmitted over the system cable of the feedback system to the servo controller. Because of the different physical conditions, there are two temperature monitoring mechanisms on the MCS motors (there is no complete motor protection in either case)

MCS06
on this motor, the winding temperature of one winding phase is monitored with a KTY 83-110 type thermal sensor.

MCS09 to 19
These motors are monitored by three thermal sensors (1x KTY 83-110 + 2x PTC 150 °C) connected in series. This means that the temperature of the motor is determined with great accuracy in the permitted operating range and at the same time the overtemperature response configured in the controller is executed in the event of overtemperature in one of the winding phases.

Variation of resistance

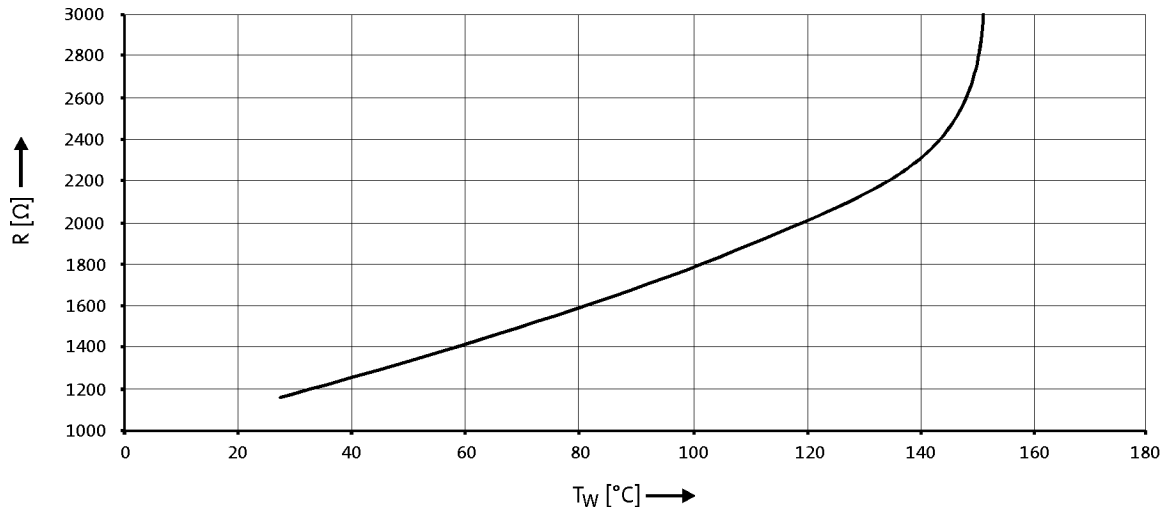

► If the detector is supplied with a measured current of 1 mA, the above relationship between the temperature and the resistance applies.



Terminal box

If a servo motor is to be connected to an existing cable or plug connectors are not to be used for other reasons, the connection can also be made via a terminal box.

The terminals are designed as tension spring terminals to ensure here the long-term vibration resistance of the cable contacts with adequate contact pressure required.

The terminal boxes have generously dimensioned space for the customer's own wiring and large surface shield connection areas to ensure a secure EMC-compliant connection. The cable outlet may be to the left or to the right, depending on requirements.

It is not possible to attach a terminal box to the MCS06 or to models with the blower.

Connections

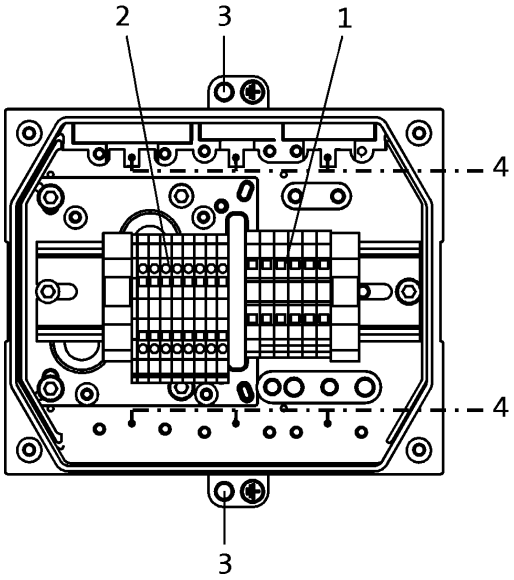



1: Power connection (terminals loadable up to 65 A) + brake connection.

2: Angle/speed sensor connection + thermal sensor connection.

3: PE connection.

4: Large area shield contact.

5: Openings for 2x M32, 2x M25, 2x M20 fittings. The openings are plugged and can be opened up as required by the customer.

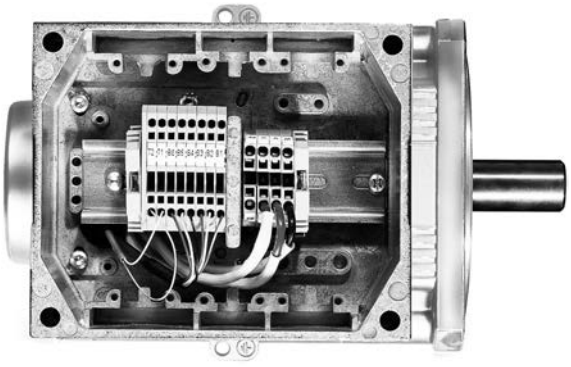



Terminal box

Dimensions

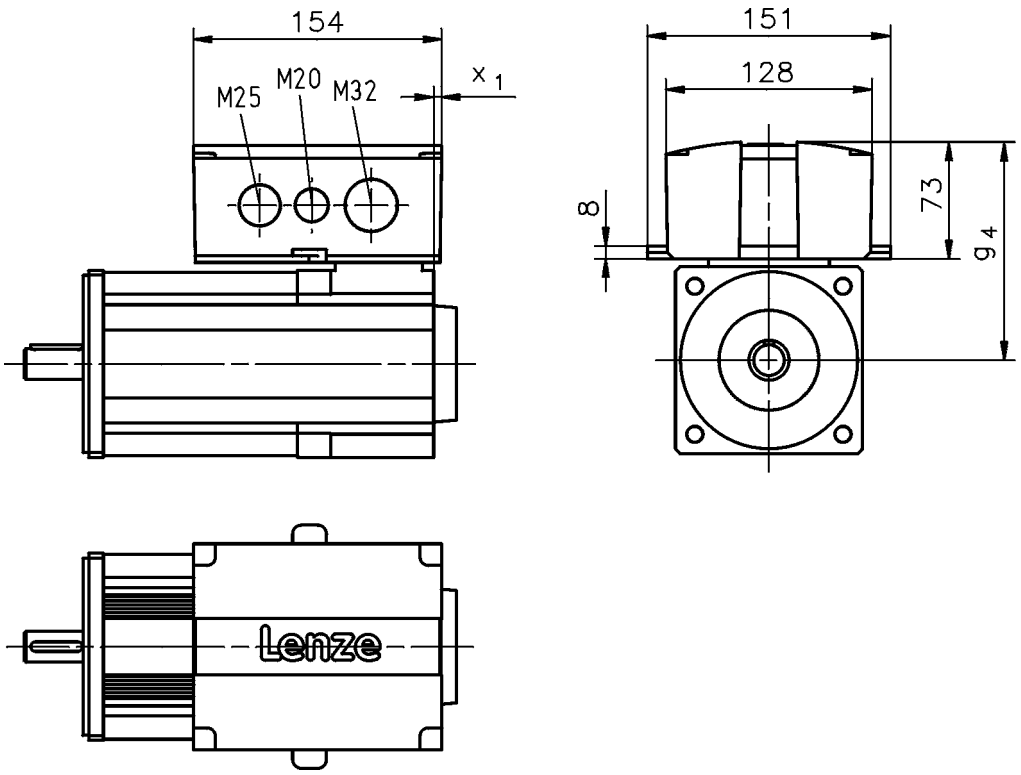

	g_4	x_1
	[mm]	[mm]
MCS09	121	8
MCS12	136	5
MCS14	147	3
MCS19	172	



ICN connector

An ICN connector is used as standard for the electrical connection to the servo motors.

A connector is used for the connection of motor and brake.
The connections to the feedback system/temperature monitoring and the blower each employ a separate connector.

The connectors can be rotated through 270° and are fitted with a bayonet catch for SpeedTec connectors. As the connector fixing is also compatible with conventional union nuts. Existing mating connectors can therefore still be used without difficulty.

Connection for power and brake

► MCS06 to 12

Pin assignment			
Contact	Designation	Meaning	
1	BD1	Holding brake +	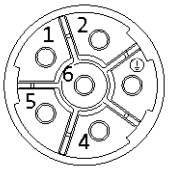
2	BD2	Holding brake -	
PE	PE	PE conductor	
4	U	Phase U power	
5	V	Phase V power	
6	W	Phase W power	

► MCS14 to 19

Pin assignment			
Contact	Designation	Meaning	
1		Not assigned	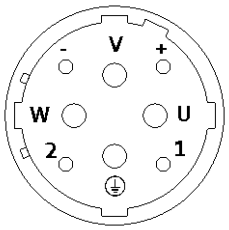
2			
+	BD1	Holding brake +	
-	BD2	Holding brake -	
PE	PE	PE conductor	
U	U	Phase U power	
V	V	Phase V power	
W	W	Phase W power	



ICN connector

Feedback connection

► Resolver

Pin assignment			
Contact	Designation	Meaning	
1	+Ref	Transformer windings	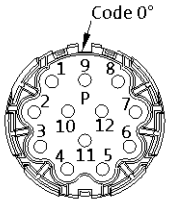
2	-Ref		
3	+VCC ETS	Supply: Electronic nameplate	
4	+COS	Cosine stator windings	
5	-COS		
6	+SIN	Sine stator windings	
7	-SIN		
8		Not assigned	
9			
10			
11	+KTY	KTY temperature sensor	
12	-KTY		

► Hiperface incremental encoder and SinCos absolute value encoder

Pin assignment			
Contact	Designation	Meaning	
1	B	Track B/+SIN	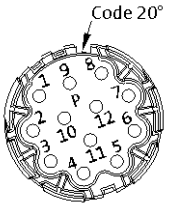
2	A^-	Track A inverse/-COS	
3	A	Track A/+COS	
4	$+U_B$	Supply +	
5	GND	Mass	
6	Z^-	Zero track inverse/-RS485	
7	Z	Zero track/+RS485	
8		Not assigned	
9	B^-	Track B inverse/-SIN	
10		Not assigned	
11	+KTY	KTY temperature sensor	
12	-KTY		



ICN connector

Feedback connection

► SinCos absolute value encoder with EnDat interface

Pin assignment			
Contact	Designation	Meaning	
1	U_P sensor	Supply: UP sensor	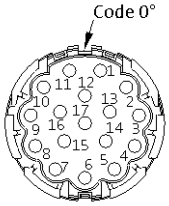
2		Not assigned	
3			
4	0 V sensor	Supply: 0 V sensor	
5	+KTY	KTY temperature sensor	
6	-KTY		
7	$+U_B$	Supply +	
8	Cycle	EnDat interface cycle	
9	Cycle$^-$	EnDat interface inverse cycle	
10	GND	Mass	
11	Shield	Encoder housing screen	
12	B	Track B	
13	B$^-$	Track B inverse/-SIN	
14	Data	EnDat interface data	
15	A	Track A	
16	A$^-$	Track A inverse	
17	Data$^-$	EnDat interface inverse data	

Blower connection

Pin assignment			
Contact	Designation	Meaning	
PE	PE	PE conductor	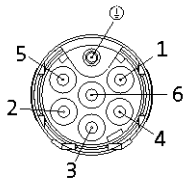
1	U1	Fan	
2	U2		
3		Not assigned	
4			
5			
6			





MCA asynchronous servo motors

2 to 1,100 Nm

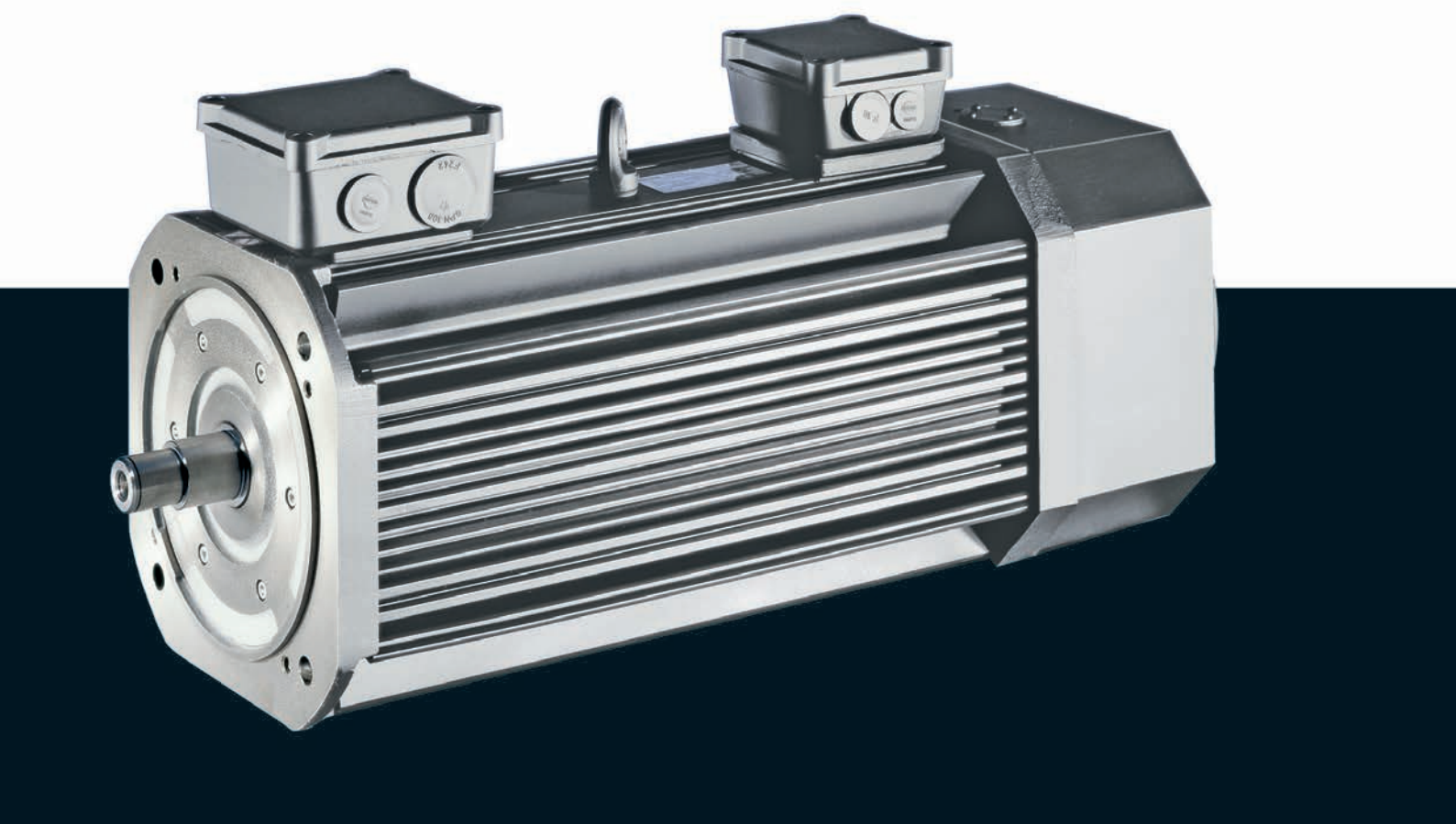

MCA asynchronous servo motors



Contents

General information	List of abbreviations	6.11 - 4
	Product key	6.11 - 6
	Product information	6.11 - 8
	Functions and features	6.11 - 9
	Dimensioning	6.11 - 11
Technical data	Standards and operating conditions	6.11 - 19
	Permissible radial and axial forces	6.11 - 20
	Rated data, non-ventilated	6.11 - 22
	Rated data, IP54 forced ventilated	6.11 - 23
	Rated data, IP23s forced ventilated	6.11 - 24
	Selection tables, Servo Drives 9400 HighLine	6.11 - 25
	Selection tables, Inverter Drives 8400 TopLine	6.11 - 32
	Selection tables, Servo Drives ECS	6.11 - 38
	Selection tables, Servo Inverter 9300	6.11 - 41
	Torque characteristics	6.11 - 47
	Dimensions, self-ventilated	6.11 - 66
	Dimensions, forced ventilated	6.11 - 68
Accessories	Permanent magnet holding brake	6.11 - 75
	Spring-applied holding brake	6.11 - 78
	Resolver	6.11 - 80
	Incremental encoder and SinCos absolute value encoder	6.11 - 81
	Blowers	6.11 - 83
	Temperature monitoring	6.11 - 84
	Terminal box	6.11 - 85
	ICN connector	6.11 - 87



List of abbreviations

$\eta_{100\,\%}$	[%]	Efficiency
cos φ		Power factor
du/dt	[kV/µs]	Insulation resistance
$F_{ax,-}$	[N]	Min. axial force
$F_{ax,+}$	[N]	Max. axial force
$f_{in,max}$	[Hz]	Max. input frequency
f_{max}	[kHz]	Limit frequency
f_{max}	[kHz]	Max. switching frequency
f_N	[Hz]	Rated frequency
F_{rad}	[N]	Max. radial force
H_{max}	[m]	Site altitude
I_0	[A]	Standstill current
I_{max}	[A]	Max. short-time DC-bus current
I_{max}	[A]	Max. current
I_{max}	[A]	Max. current consumption
I_{max}	[A]	Max. current
I_{max}	[A]	Max. DC-bus current
I_N	[A]	Rated current
J	[kgcm²]	Moment of inertia
J_{MB}	[kgcm²]	Moment of inertia
$KE_{LL\,150\,°C}$	[V /1000 rp]	Voltage constant
$Kt_{0\,150\,°C}$	[Nm/A]	Torque constant
L	[mH]	Mutual inductance
$L_{1\sigma}$	[mH]	Stator leakage inductance
$L_{2\sigma}$	[mH]	Rotor leakage inductance
L_N	[mH]	Rated inductance
m	[kg]	Mass
M_0	[Nm]	Stall torque
$M_{0,\,max}$	[Nm]	Max. standstill torque
M_{av}	[Nm]	Average dynamic torque
M_{max}	[Nm]	Max. torque
M_N	[Nm]	Rated torque
n_{eto}	[r/min]	Transition speed
n_k	[r/min]	Speed
n_{max}	[r/min]	Max. speed

n_N	[r/min]	Rated speed
P_N	[kW]	Rated power
Q_E	[J]	Maximum switching energy
R	[Ω]	Insulation resistance
R	[Ω]	Min. insulation resistance
R_1	[Ω]	Stator impedance
R_2	[Ω]	Charging resistor
R_2	[Ω]	Rotor impedance
$R_{UV\,150\,°C}$	[Ω]	Stator impedance
$R_{UV\,20\,°C}$	[Ω]	Stator impedance
$S_{hü}$	[1/h]	Transition operating frequency
T	[°C]	Operating temperature
T	[°C]	Rated temperature
T	[°C]	Max. ambient temperature of bearing
T	[°C]	Max. surface temperature
T	[°C]	Max. ambient temperature for transport
T	[°C]	Min. ambient storage temperature
T	[°C]	Min. ambient temperature for transport
T	[°C]	Ambient temperature
t_1	[ms]	Engagement time
t_2	[ms]	Disengagement time
$T_{opr,max}$	[°C]	Max. ambient operating temperature
$T_{opr,min}$	[°C]	Min. ambient operating temperature
$U_{in,max}$	[V]	Max. input voltage
$U_{in,min}$	[V]	Min. input voltage
U_{max}	[V]	Max. mains voltage
U_{max}	[V]	Min. input voltage
U_{min}	[V]	Min. mains voltage
$U_{N,\,AC}$	[V]	Rated voltage
$U_{N,\,DC}$	[V]	Rated voltage
Z_{ro}	[Ω]	Rotor impedance
Z_{rs}	[Ω]	Impedance
Z_{so}	[Ω]	Stator impedance



List of abbreviations

CE	Communauté Européenne
CSA	Canadian Standards Association
DIN	Deutsches Institut für Normung e.V.
EMC	Electromagnetic compatibility
EN	European standard
GOST	Certificate for Russian Federation
IEC	International Electrotechnical Commission
IM	International Mounting Code
IP	International Protection Code
NEMA	National Electrical Manufacturers Association
UkrSEPRO	Certificate for Ukraine
UL	Underwriters Laboratory Listed Product
UR	Underwriters Laboratory Recognized Product
VDE	Verband deutscher Elektrotechniker (Association of German Electrical Engineers)



Product key

Motor type	Motor size	Rated speed	Mains voltage	Speed/angle sensor	Brake	Standard design	Shaft diameter	Concentricity+ vibration level/ Bearing
MCA								
Asynchronous servo motor	(Example: 14L)	value in 100 rpm (example: 2000 = 20)					(Example: 24)	

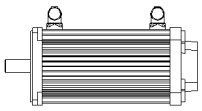

Mains voltage

400 V: -

Speed/angle sensor

- RS0 – Resolver
- SRS – SinCos absolute encoder single- turn, Hiperface, AS1024-8V-H (SRS50)
- SRM – SinCos absolute encoder multi-turn, Hiperface, AM1024-8V-H (SRM50)
- ECN – SinCos absolute encoder single- turn, EnDat, AS2048-5V-E (ECN 1313)
- EQN – SinCos absolute encoder multi- turn, EnDat, AM2048-5V-E (EQN 1325)
- EQI – SinCos absolute encoder multi- turn, EnDat, AM32-5V-E (EQI 1331) [2]
- S20 – Incremental sin-cos encoder IG2048-5V-S (ITD 22)
- T20 – TTL incremental encoder, IG2048-5V-T (ITD 21)
- T40 – TTL incremental encoder, IG4096-5V-T (ITD 21)
- RV0 – Safety resolver, RV03
- S1S – Safety incremental Sin-cos encoder, IG1024-5V-V3

Brake

- B0 – No brake
- P1 – PM brake DC 24V
- P2 – PM brake DC 24V, heavy-duty
- P5 – PM brake DC 205 V [1]
- P6 – PM brake DC 205 V, heavy-duty [1]
- F1 – Spring-applied brake DC 24 V
- F2 – Spring-applied brake DC 24 V, heavy-duty
- FG – Spring-applied brake AC 230 V [1]
- FH – Spring-applied brake AC 230 V, heavy-duty [1]

Standard design

- A – Standard flange form A / FF (B5), shaft without keyway
- B – Standard flange form A / FF (B5), shaft with keyway
- C – Standard flange form C / FT (B14), shaft without keyway
- N – Standard flange form C / FT (B14), shaft with keyway
- F – Like standard design A, but with large flange (MCA20/21/26)
- G – Like standard design B, but with large flange (MCA20/21/26)
- O – B3 foot mounting, shaft without keyway
- P – B3 foot mounting, shaft with keyway

Concentricity+ vibration level/ Bearing

- N – normal vibrational severity standard bearing
- R – reduced vibrational severity standard bearing
- V – normal vibrational severity reinforced bearing

[1] Not possible for UL design.
[2] Not possible for motor frame sizes 20, 22 and 26.



Product key

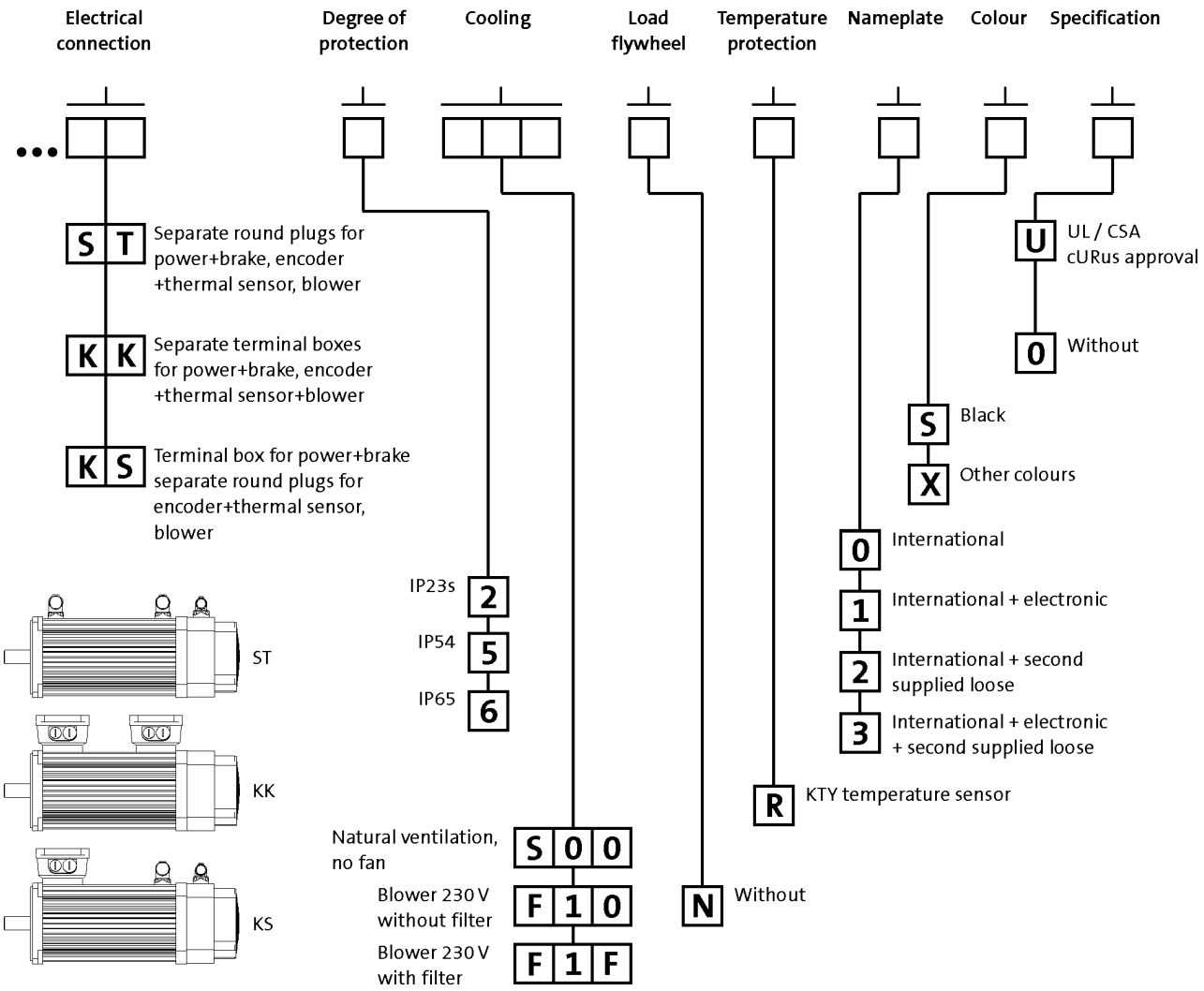
Electrical connection
Degree of protection
Cooling
Load flywheel
Temperature protection
Nameplate
Colour
Specification
S T
Separate round plugs for power+brake, encoder +thermal sensor, blower
K K
Separate terminal boxes for power+brake, encoder +thermal sensor+blower
K S
Terminal box for power+brake separate round plugs for encoder+thermal sensor, blower
ST
KK
KS
IP23s
IP54
IP65
2
5
6
Natural ventilation, no fan
Blower 230 V without filter
Blower 230 V with filter
S 0 0
F 1 0
F 1 F
N
Without
R
KTY temperature sensor
0
International
1
International + electronic
2
International + second supplied loose
3
International + electronic + second supplied loose
S
Black
X
Other colours
U
UL / CSA cURus approval
0
Without



Product information

An application-oriented structure, low moments of inertia, compact dimensions and a high degree of intrinsic operational reliability characterise these robust and dynamic motors.

The compact design and the low moment of inertia allow these motors to be used in dynamic applications. If your application calls for a broad speed setting range and a robust construction, then the choice is easy: MCA asynchronous servo motors from Lenze.
Whether as a self-ventilated version or with a blower – with a power range from 0.8 to 53.8 kW, the MCA asynchronous servo motors offer rated torque values of up to 280 Nm and peak torque values of up to 1100 Nm. In comparison to standard three-phase AC motors, these servo motors have the edge in terms of lower moments of inertia, lower weight and higher maximum speeds.

Advantages
- High dynamic performance thanks to low moments of inertia
- Compact size with high power density
- Robust regenerative resolver system – alternatively SinCos and incremental encoder for the highest precision
- Easy to install and service friendly thanks to use of SpeedTec connectors
- Terminal box optional up to MCA21 MCA22 and 26 with three-part terminal box
- Protection: IP23, IP54, IP65 optional for naturally ventilated servo motors
- cURus-approved, GOST-certified, CE, RoHS-compliant
- High maximum speeds
- Wide speed setting range
- Field weakening operation usable
- Electronic nameplate



MCA21 asynchronous servo motor



Functions and features

	MCA10	MCA13	MCA14	MCA17	MCA19
Design					
	B14-FT85 B5-FF100	B14-FT130 B5-FF130	B14-FT130 B5-FF165		B14-FT130 B5-FF215
Shaft end (with and without keyway)					
	14 x 30	19 x 40	24 x 50		28 x 60
A end shield					
	Oil-tight Not oil-tight				
Brake					
Spring-applied brake					
Permanent magnetic brake	DC 24 V AC 230 V [1] DC 205 V [1]				
Speed and angle encoder					
	Resolver SinCos single-turn/multi-turn Incremental encoder				
Cooling					
Without blower	Naturally ventilated				
Axial blower, 1 phase	230 V; 50 Hz				
Thermal sensor					
Thermal detector	KTY				
Motor connection: plug connector					
	Power + brake Encoder + thermal sensor Blower				
Motor connection: terminal box					
	Power + brake Encoder + thermal sensor	Power + brake Encoder + thermal sensor + blower			
Motor connection: Terminal box + plug connector					
Terminal box	Power + brake Encoder + thermal sensor				
Plug connector		Blower			
Shaft bearings					
Bearing type	Deep-groove ball bearing with high-temperature resistant grease, sealing disc or cover plate				
Position of the locating bearing	Drive end Standard motors (B3, B5, B14): side B Motors for gearbox direct mounting: side A				
Installation of the locating bearing					
Colour					
	RAL9005M				

[1] Not possible for UR version.



Functions and features

	MCA20	MCA21	MCA22	MCA26
Design				
	B3 B35-FF215 B35-FF265	B14-FT130 B5-FF215 B5-FF265	B3 B35-FF265	B3 B35-FF265 B35-FF350
Shaft end (with and without keyway)				
	38 x 80			55 x 110
A end shield				
	Oil-tight Not oil-tight			
Brake				
Spring-applied brake	DC 24 V AC 230 V [1]		DC 24 V AC 230 V [1]	
Permanent magnetic brake		DC 24 V AC 230 V [1] DC 205 V [1]		
Speed and angle encoder				
	Resolver SinCos single-turn/multi-turn Incremental encoder			
Cooling				
Without blower		Naturally ventilated		
Axial blower, 1 phase	230 V; 50 Hz 230 V; 60 Hz	230 V; 50 Hz	230 V; 50 Hz 230 V; 60 Hz	
Thermal sensor				
Thermal detector	KTY			
Motor connection: plug connector				
	Power + brake Encoder + thermal sensor Blower			
Motor connection: terminal box				
		Power + brake Encoder + thermal sensor + blower		
Motor connection: Terminal box + plug connector				
Terminal box	Power + brake	Power + brake Encoder + thermal sensor	Power + brake	
Plug connector	Encoder + thermal sensor Blower	Blower	Encoder + thermal sensor Blower	
Shaft bearings				
Bearing type	Deep-groove ball bearing with high-temperature resistant grease, sealing disc or cover plate			
Position of the locating bearing	Non-drive end	Drive end Standard motors (B3, B5, B14): side B Motors for gearbox direct mounting: side A	Non-drive end	
Installation of the locating bearing	insulation		insulation	
Colour				
	RAL9005M			

[1] Not possible for UR version.



Dimensioning

Speed-dependent safety functions

Single encoder concepts with resolvers

Servo motors can perform speed-dependent safety functions for safe speed and / or safe relative position monitoring in a drive system with the Servo Drives 9400. The SM301 safety module, which can be integrated in the Servo Drives 9400, is used to implement these functions. When planning systems/installations of this kind, the following must always be observed:

When using just one single feedback system in the environment of these safety applications, the applicable safety engineering standard IEC 61800-5-2 [Adjustable speed electrical power drive systems - Part: 5-2: Safety requirements - Functional] stipulates special requirements for the connection between feedback system and motor shaft. This is due to the fact that two-channel safety systems at this point in the mechanical system are actually designed as single-channel systems. If this mechanical connection is designed with considerable overdimensioning, the standard permits exclusion of the fault "encoder-shaft breakage" or "encoder-shaft slip".
As such, acceleration limit values must not be exceeded for the individual drive solutions. You can find the limit values in the corresponding feedback data of the individual motor ranges.

Speed-dependent safety functions in connection with the SM301 safety module

For the following speed-dependent safety functions, the motor-feedback system combinations listed in the following table are available:

- Safe stop 1 (SS1)
- Safe operational stop (SOS)
- Safely Limited Speed (SLS)
- Safe Maximum Speed (SMS)
- Safe direction (SDI)
- Operation mode selector (OMS) with confirmation (ES)
- Safe speed monitor (SSM)
- Safely limited increment (SLI).

Encoder type	Encoder type	Product key	Feedback	Safe speed monitoring
			Design	
SinCos incremental	Single-turn	IG1024-5V-V3		PL e/SIL 3
Resolver		RV03		
			2-encoder concept	up to PL e / SIL 3



Dimensioning

Cooling effect of mounting flange

Mounting on a thermally conducting / insulating plate or machine chassis has an influence on heating up the motor, particularly when using naturally ventilated motors.

The motor rating data specified in the catalogue applies when mounting on a steel plate with free convection with the following dimensions:

- MCA10 / 13: 270 x 270 mm
- MCA14 / 17: 330 x 330 mm
- MCA19 to 26: 450 x 450 mm

Vibrational severity

		MCA10	MCA13	MCA14	MCA17	MCA19	MCA20	MCA21	MCA22	MCA26
Vibrational severity										
IEC/EN 60034-14		A		B			A	B	A	
Maximum r.m.s. value of the vibration velocity [1]	[mm/s]	1.60		0.70			1.60	0.70	1.60	

[1] Free suspension

► at n = 600 to 3,600 rpm



Dimensioning

Concentricity and axial run-out of the mounting flanges and smooth running of the shaft ends

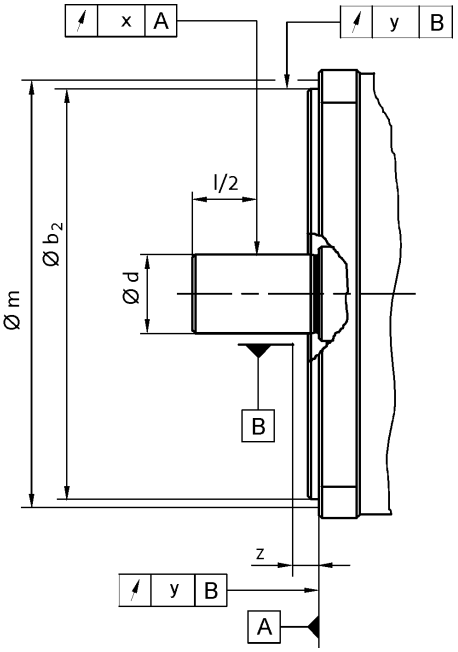

				MCA10		MCA13		MCA14		MCA17		MCA19	
Flange size													
				FF100	FT85	FF130	FT130	FF165	FT130	FF165	FT130	FF215	FT130
Dimensions													
	b_2	j6	[mm]	80	70	110		130	110	130	110	180	110
	b_2	h6	[mm]										
	d	k6	[mm]	14		19		24				28	
	d	m6	[mm]										
Distance													
Measuring diameter	m		[mm]	113	98.0	149		188	149	188	149	239	149
Dial gauge holder for flange check	z	+/- 1	[mm]	10.0									
Concentricity													
IEC 60072				Normal class				Precision class					
Value	y		[mm]	0.080		0.10		0.050					
Linear movement													
IEC 60072				Normal class				Precision class					
Value	y		[mm]	0.080		0.10		0.050					
Smooth running													
IEC 60072				Normal class				Precision class					
Value	x		[mm]	0.035		0.040		0.021					

► Limit values for checking the smooth running of the shaft ends as well as the concentricity and axial run-out of the mounting flange to IEC 60072



Dimensioning

Concentricity and axial run-out of the mounting flanges and smooth running of the shaft ends

				MCA20		MCA21			MCA22	MCA26
Flange size										
				FF215	FF265	FF215	FF265	FT130	FF265	FF350
Dimensions										
	b_2	j6	[mm]	180	230	180	230	110	230	
	b_2	h6	[mm]							300
	d	k6	[mm]			38				
	d	m6	[mm]							55
Distance										
Measuring diameter	m		[mm]	239	289	239	289	149	289	384
Dial gauge holder for flange check	z	+/- 1	[mm]				10.0			
Concentricity										
IEC 60072				Normal class		Precision class			Normal class	
Value	y		[mm]	0.10		0.050			0.10	
Linear movement										
IEC 60072				Normal class		Precision class			Normal class	
Value	y		[mm]	0.10		0.050			0.10	
Smooth running										
IEC 60072				Normal class		Precision class			Normal class	
Value	x		[mm]	0.050		0.060			0.050	0.060

► Limit values for checking the smooth running of the shaft ends as well as the concentricity and axial run-out of the mounting flange to IEC 60072



Dimensioning

Notes on the selection tables

Graphical display of the operating points

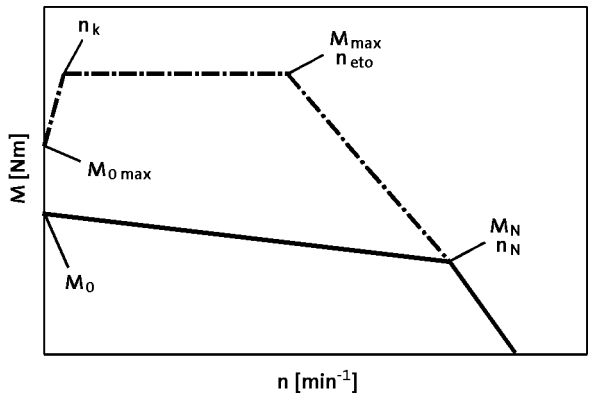

	n_k
	[r/min]
MCA	150
MQA	

Further selection tables with different switching frequencies are available with the following codes:
- DS_ZT_MCS_0001
- DS_ZT_MCA_0001
- DS_ZT_MDSKS_0001
- DS_ZT_MDFKS_0001

Simply enter this code (e.g. DS_ZT_MCS_0001) as a search string at **www.lenze.de/dsc** and you will be given the information immediately in the form of a PDF format.

Please note:
- With an active load (e.g. vertical drive axes, hoists, test benches, unwinders), $M_{0\,max}$ must be taken into account
- With a passive load (e.g. horizontal drive axes), M_{max} can generally be used
- At speeds < n_k, the inverter-specific torque $M_{0\,max}$ that can be achieved is lower than M_{max}
- On the servo inverters, the switching frequency-dependent overload capacity has been taken into account in the factory settings. For further information, please refer to the Servo-Inverters catalogue.



Dimensioning

Notes on the torque characteristics

Graph of the torque characteristics

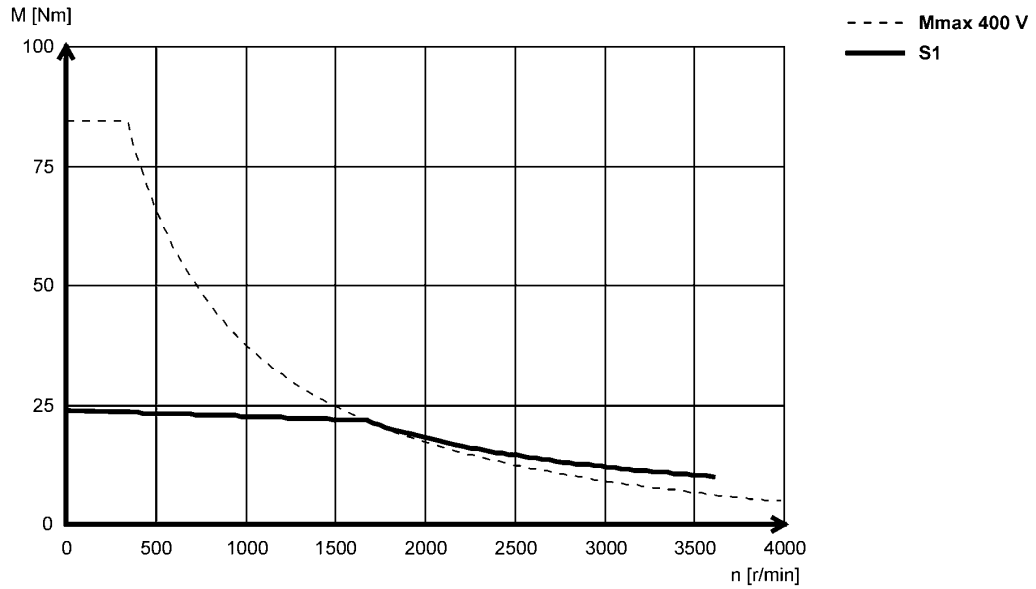

With asynchronous servo motors, two characteristics are shown in each case. The characteristics for continuous operation (S1) show the speed-dependent constant torque of the motor when operating with a servo inverter that itself is operated at a constant switching frequency. The limit torque characteristics correspond to those that come about during operation of the motor with the largest possible 9400 Servo Drive in each case (see selection tables). The servo inverter is set to a variable switching frequency here.

Characteristics in the Internet

You can find the torque characteristic for inverter-motor combinations on the Internet at **www.lenze.de/dsc**. This lists all useful combinations with the servo inverters 9400, 9300, ECS and Inverter Drives 8400 TopLine. These characteristics are each determined using the factory default settings of the inverters:

- 9400 with variables switching frequency.
  This means that up to 6-fold overcurrent can be applied in borderline cases.
- 9300 and ECS with fixed switching frequency.
- 8400 TopLine with variables switching frequency.

The continuous operation characteristics (S1) show the inverter-independent motor rating values

Further information on the terms switching frequency and factory default settings can be found in the operating manual of the respective servo inverter.



Dimensioning

Influence of ambient temperature and site altitude

The information relating to the servo motors in the tables and graphs is valid for a maximum ambient temperature (T_{opr}) of 40 °C and a site altitude (H) up to 1000 m above sea level. The torque correction factor (k_{M1}) shall be applied to the S1 torque characteristic (M_0...M_N) in the event of differing installation conditions.

► The maximum permissible ambient temperature (T_{opr}) for servo motors with blowers is 40 °C

Torque correction factor k_{m1}

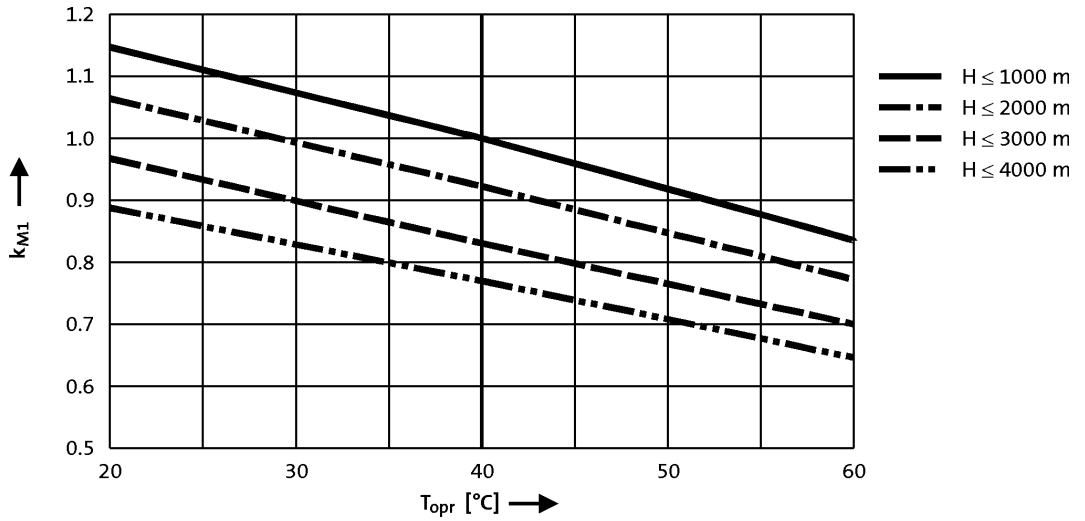





Standards and operating conditions

			MCA	
Cooling type				
			Naturally ventilated	Blower
Enclosure				
EN 60529			IP54 IP65	IP54 IP23s [2]
Temperature class				
IEC/EN 60034-1; utilisation			F	
IEC/EN 60034-1; insulation system (enamel-insulated wire)			H	
Conformity				
CE			Low-Voltage Directive	
			2006/95/EC	
EAC			TP TC 004/2011 (TR C	
Approval				
			UkrSEPRO	
CSA			CSA 22.2 No. 100	
cURus [3]			UL 1004-1 UL 1004-6 Power Conversion Equipment (File-No. E210321)	
Max. voltage load				
IEC/TS 60034-25			Pulse voltage limiting curve A	
Smooth running				
IEC 60072			Precision class [1] Normal class	
Linear movement				
IEC 60072			Precision class [1] Normal class	
Concentricity				
IEC 60072			Precision class [1] Normal class	
Mechanical ambient conditions (vibration)				
IEC/EN 60721-3-3			3M6 3M6	
Min. ambient operating temperature				
Without brake	$T_{opr,min}$	[°C]	-20	-15
With brake	$T_{opr,min}$	[°C]	-10	
Max. ambient temperature for operation				
	$T_{opr,max}$	[°C]	40	
Max. surface temperature				
	T	[°C]	140	110
Mechanical tolerance				
Flange centring diameter			$b_2 \leq 230$ mm = j6 $b_2 > 230$ mm = h6	
Shaft diameter			$d \leq 50$ mm = k6 $d > 50$ mm = m6	
Site altitude				
Amsl	H_{max}	[m]	4000	

[1] MCA14, 17, 19 and 21.
[2] MCA20, 22 and 26.
[3] MCA20X29, MCA21X35 with circular connector for motor connection only UR



Permissible radial and axial forces

Application of forces

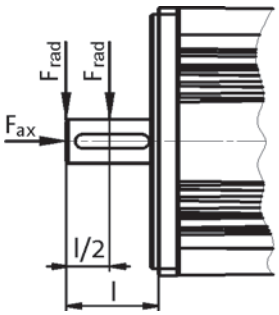

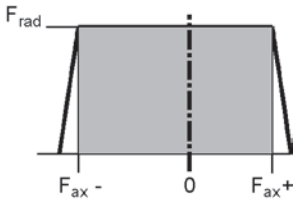

Application of force at l/2

	Bearing service life L_{10}														
	5000 h			10000 h			20000 h			30000 h			50000 h		
	F_{rad} [N]	$F_{ax,-}$ [N]	$F_{ax,+}$ [N]	F_{rad} [N]	$F_{ax,-}$ [N]	$F_{ax,+}$ [N]	F_{rad} [N]	$F_{ax,-}$ [N]	$F_{ax,+}$ [N]	F_{rad} [N]	$F_{ax,-}$ [N]	$F_{ax,+}$ [N]	F_{rad} [N]	$F_{ax,-}$ [N]	$F_{ax,+}$ [N]
MCA10	630	-130	320	500	-60	250	400	-30	210	330	-10	190	230	0	200
MCA13	850	-110	570	700	-10	450	470	0	450		0	450			
MCA14	1000	-140	500	780	-60	420	550	-30	380	400	-10	360	250	0	350
MCA17	1380	-180	790	1040	-70	680	660	-40	650	440	-20	630	280		610
MCA19	1880	-50	1530	1080	-30	1510	500	-100	1490	160	0	1470			
MCA20	3400	-1330	690	2500	-1020	380	1950	-780	140	1700	-690	40			
MCA21	3200	-260	1740	2360	-70	1550	1470	-20	1504	1030	0	1480			
MCA22	3600	-2370	1700	2800	-1740	1090	2200	-1280	640	1900	-1080	440	1600	-880	240
MCA26	6950	-2500	1580	5400	-1800	880	4300	-1300	380	3700	-1090	160			

Application of force at l

	Bearing service life L_{10}														
	5000 h			10000 h			20000 h			30000 h			50000 h		
	F_{rad} [N]	$F_{ax,-}$ [N]	$F_{ax,+}$ [N]	F_{rad} [N]	$F_{ax,-}$ [N]	$F_{ax,+}$ [N]	F_{rad} [N]	$F_{ax,-}$ [N]	$F_{ax,+}$ [N]	F_{rad} [N]	$F_{ax,-}$ [N]	$F_{ax,+}$ [N]	F_{rad} [N]	$F_{ax,-}$ [N]	$F_{ax,+}$ [N]
MCA10	590	-130	320	470	-60	250	370	-30	210	310	-10	190	220	0	200
MCA13	780	-110	570	640	-10	450	430	0	450	300	0	450			
MCA14	930	-140	500	710	-60	420	490	-30	380	370	-10	360	230	0	350
MCA17	1270	-180	790	960	-70	680	610	-40	650	400	-20	630	260		610
MCA19	1740	-50	1530	1000	-30	1510	420	-100	1490	140	0	1470			
MCA20	3150	-1170	530	2300	-920	280	1800	-710	70	1400	-650	0			
MCA21	2940	-260	1740	2160	-70	1550	1350	-20	1504	950	0	1480			
MCA22	3500	-2240	1600	2600	-1640	1100	2050	-1200	560	1800	-1020	380	1450	-850	200
MCA26	6400	-2080	1150	5000	-1600	680	4000	-1160	230	3400	-1090	50			

► The values for the bearing service life L_{10} relate to an average speed of 4000 r/min. For MCA20/22/26 the speed is 3000 r/min. Depending on the ambient temperatures, the service life of the bearings is also reduced by the grease lifetime.



Permissible radial and axial forces

► Reinforced bearings

Application of forces

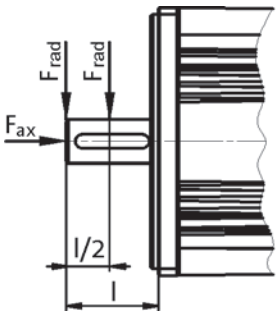

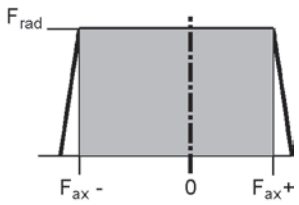

Application of force at l/2

Bearing service life L_{10}															
	5000 h			10000 h			20000 h			30000 h			50000 h		
	F_{rad} [N]	$F_{ax,-}$ [N]	$F_{ax,+}$ [N]	F_{rad} [N]	$F_{ax,-}$ [N]	$F_{ax,+}$ [N]	F_{rad} [N]	$F_{ax,-}$ [N]	$F_{ax,+}$ [N]	F_{rad} [N]	$F_{ax,-}$ [N]	$F_{ax,+}$ [N]	F_{rad} [N]	$F_{ax,-}$ [N]	$F_{ax,+}$ [N]
MCA20	7100	-970	330	5100	-800	160	3900	-640	0						
MCA22	8500	-1850	1200	7000	-1400	760	5600	-1030	390	4350	-930	290	3200	-800	160
MCA26	10500	-2180	1250	8370	-1530	600	6670	-1130	200	5840	-960	30			

Application of force at l

Bearing service life L_{10}															
	5000 h			10000 h			20000 h			30000 h			50000 h		
	F_{rad} [N]	$F_{ax,-}$ [N]	$F_{ax,+}$ [N]	F_{rad} [N]	$F_{ax,-}$ [N]	$F_{ax,+}$ [N]	F_{rad} [N]	$F_{ax,-}$ [N]	$F_{ax,+}$ [N]	F_{rad} [N]	$F_{ax,-}$ [N]	$F_{ax,+}$ [N]	F_{rad} [N]	$F_{ax,-}$ [N]	$F_{ax,+}$ [N]
MCA20	6350	-720	80	4100	-680	40	2800	-640	0						
MCA22	7000	-1750	1100	5500	-1300	660	4700	-920	280	3900	-820	180	3000	-700	60
MCA26	9600	-2200	1280	7700	-1280	360	6000	-960	30						

► The values for the bearing service life L_{10} refer to an average speed of 3000 r/min. Depending on the ambient temperatures, the service life of the bearings is also reduced by the grease lifetime.



Rated data, non-ventilated

► The data applies to a mains connection voltage of 3 x 400 V.

	n_N	M_0	M_N	M_{max}	P_N	I_0	I_N	$U_{N, AC}$	f_N	J [1]	$\eta_{100\,\%}$
	[r/min]	[Nm]	[Nm]	[Nm]	[kW]	[A]	[A]	[V]	[Hz]	[kgcm²]	[%]
MCA10I40	3950	2.30	2.00	10.0	0.80	2.60	2.40	390	140	2.40	0.70
MCA13I41	4050	4.60	4.00	32.0	1.70	4.60	4.40	390	140	8.30	75.0
MCA14L20	2000	8.00	6.70	60.0	1.40	3.90	3.30	390	70	19.2	84.0
MCA14L41	4100	8.00	5.40	60.0	2.30	7.70	5.80	390	140	19.2	78.0
MCA17N23	2300	12.8	10.8	100	2.60	6.00	5.50	390	80	36.0	86.0
MCA17N41	4110	12.8	9.50	100	4.10	12.0	10.2	350	140	36.0	83.0
MCA19S23	2340	22.5	16.3	180	4.00	9.90	8.20	390	80	72.0	90.0
MCA19S42	4150	22.5	12.0	180	5.20	19.7	14.0	330	140	72.0	83.0
MCA21X25	2490	39.0	24.6	300	6.40	15.9	13.5	390	85	180	85.0
MCA21X42	4160	39.0	17.0	300	7.40	31.8	19.8	320	140	180	84.0

	R_1	$R_{UV\,20\,°C}$	$R_{UV\,150\,°C}$	R_2	$L_{1\sigma}$	L	$L_{2\sigma}$	n_{max} [2]	m [1]
	[Ω]	[Ω]	[Ω]	[Ω]	[mH]	[mH]	[mH]	[r/min]	[kg]
MCA10I40	4.70	9.40	12.7	5.20	9.80	169	10.0	8000	6.40
MCA13I41	1.70	3.40	4.60	1.41	5.40	92.6	4.90		10.4
MCA14L20	3.00	6.00	8.10	3.13	10.0	269	10.0		15.1
MCA14L41	0.75	1.50	2.00	0.78	2.50	65.8	2.50		
MCA17N23	1.52	3.04	4.10	1.37	6.20	176	6.80		22.9
MCA17N41	0.38	0.76	1.00	0.34	1.50	43.4	1.70		
MCA19S23	0.69	1.38	1.90	0.62	3.20	111	3.90		44.7
MCA19S42	0.18	0.35	0.50	0.15	0.80	28.0	1.00		
MCA21X25	0.36	0.72	1.00	0.36	2.30	78.1	2.80		60.0
MCA21X42	0.090	0.18	0.20	0.090	0.60	19.5	0.70		

[1] Without brake.
[2] Mechanically permissible maximum speed.

The data in the R_1, $L_{1\sigma}$, L, R_2' and $L_{2\sigma}'$ columns is based on a single-phase equivalent circuit diagram at 20°C.

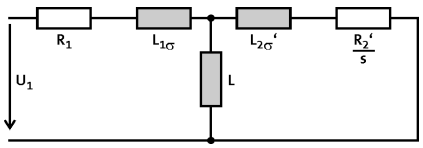



Rated data, IP54 forced ventilated

► The data applies to a mains connection voltage of 3 x 400 V.

	n_N	M_0	M_N	M_{max}	P_N	I_0	I_N	$U_{N, AC}$	f_N	J [1]	$\eta_{100\,\%}$
	[r/min]	[Nm]	[Nm]	[Nm]	[kW]	[A]	[A]	[V]	[Hz]	[kgcm²]	[%]
MCA13I34	3410	7.00	6.30	32.0	2.20	6.30	6.00	390	120	8.30	72.0
MCA14L16	1635	13.5	12.0	60.0	2.10	5.30	4.80	390	60	19.2	80.0
MCA14L35	3455	13.5	10.8	60.0	3.90	10.5	9.10	390	120	19.2	79.0
MCA17N17	1680	23.9	21.5	100	3.80	9.10	8.50	390	60	36.0	83.0
MCA17N35	3480	23.9	19.0	100	6.90	18.1	15.8	390	120	36.0	81.0
MCA19S17	1700	40.0	36.3	180	6.40	15.4	13.9	390	60	72.0	82.0
MCA19S35	3510	40.0	36.0	180	13.2	30.8	28.7	390	120	72.0	85.0
MCA21X17	1710	75.0	61.4	300	11.0	25.8	22.5	390	60	180	85.0
MCA21X35	3520	75.0	55.0	300	20.3	49.5	42.5	390	120	180	88.0
MCA22P08...5F□□	760	120	110	500	8.75	23.4	22.1	345	28	487	80.0
MCA22P14...5F□□	1425	120	107	500	16.0	40.5	37.7	350	50	487	87.0
MCA22P17...5F□□	1670	120	106	500	18.5	46.7	42.7	360	58	487	88.0
MCA22P29...5F□□	2935	120	100	500	30.7	80.9	72.1	360	100	487	87.0
MCA26T05...5F□□	550	220	216	1100	12.4	35.4	34.9	350	19	1335	83.0
MCA26T10...5F□□	1030	220	210	1100	22.7	62.9	61.5	350	36	1335	88.0
MCA26T12...5F□□	1200	220	207	1100	26.0	78.4	75.1	350	41	1335	87.0
MCA26T22...5F□□	2235	220	195	1100	45.6	125	113	340	76	1335	92.0

	R_1	$R_{UV\,20\,°C}$	$R_{UV\,150\,°C}$	R_2	$L_{1\sigma}$	L	$L_{2\sigma}$	n_{max} [2]	m [1]
	[Ω]	[Ω]	[Ω]	[Ω]	[mH]	[mH]	[mH]	[r/min]	[kg]
MCA13I34	1.70	3.40	4.60	1.41	4.90	76.7	4.40	8000	12.0
MCA14L16	3.00	6.00	8.10	3.13	9.50	224	9.30		16.9
MCA14L35	0.75	1.50	2.00	0.78	2.40	56.7	2.30		
MCA17N17	1.52	3.04	4.10	1.37	5.60	144	6.00		25.5
MCA17N35	0.38	0.76	1.00	0.34	1.40	36.9	1.50		
MCA19S17	0.69	1.38	1.90	0.62	2.60	80.9	3.10		48.2
MCA19S35	0.18	0.35	0.50	0.15	0.70	20.3	0.80		
MCA21X17	0.36	0.72	1.00	0.36	2.10	68.9	2.60		63.5
MCA21X35	0.090	0.18	0.20	0.090	0.50	16.8	0.60		
MCA22P08...5F□□	0.54	1.07	1.62	0.48	3.56	94.9	4.80	6500	105
MCA22P14...5F□□		0.36	0.54		3.60	94.2	4.85		
MCA22P17...5F□□	0.13	0.27	0.40	0.12	0.90	23.4	1.21		
MCA22P29...5F□□		0.080	0.12			22.9			
MCA26T05...5F□□	0.29	0.59	0.89	0.25	2.86	66.8	5.04		194
MCA26T10...5F□□		0.20	0.30		2.93	69.2	5.12		
MCA26T12...5F□□	0.080	0.15	0.23	0.062	0.74	18.1	1.29		
MCA26T22...5F□□		0.050	0.075		0.78	19.8			

[1] Without brake.
[2] Mechanically permissible maximum speed.
The data in the R_1, $L_{1\sigma}$, L, R_2' and $L_{2\sigma}$' columns is based on a single-phase equivalent circuit diagram at 20°C.

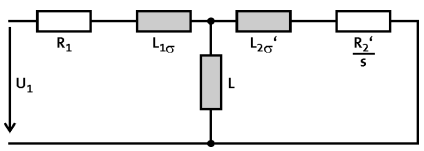



Rated data, IP23s forced ventilated

► The data applies to a mains connection voltage of 3 x 400 V.

	n_N	M_0	M_N	M_{max}	P_N	I_0	I_N	$U_{N, AC}$	f_N	J [1]	$\eta_{100\,\%}$
	[r/min]	[Nm]	[Nm]	[Nm]	[kW]	[A]	[A]	[V]	[Hz]	[kgcm²]	[%]
MCA20X14...2F□□	1420	68.0	61.0	250	9.07	26.0	23.0	350	50	171	82.0
MCA20X29...2F□□	2930	68.0	53.5	250	16.4	52.0	42.4	350	100	171	87.0
MCA22P08...2F□□	760	135	120	500	9.55	26.0	23.5	355	28	487	80.0
MCA22P14...2F□□	1425	135	115	500	17.2	45.1	40.0	360	50	487	86.0
MCA22P17...2F□□	1670	135	112	500	19.6	52.1	44.5	360	58	487	88.0
MCA22P29...2F□□	2935	135	110	500	33.8	90.2	77.8	360	100	487	89.0
MCA26T05...2F□□	550	290	280	1100	16.1	44.0	42.4	350	20	1335	81.0
MCA26T10...2F□□	1030	290	260	1100	28.0	78.0	69.6	350	36	1335	87.0
MCA26T12...2F□□	1200	290	255	1100	32.0	101	83.3	350	41	1335	87.0
MCA26T22...2F□□	2235	290	230	1100	53.8	160	127	340	76	1335	92.0

	R_1	$R_{UV\,20\,°C}$	$R_{UV\,150\,°C}$	R_2	$L_{1\sigma}$	L	$L_{2\sigma}$	n_{max} [2]	m [1]
	[Ω]	[Ω]	[Ω]	[Ω]	[mH]	[mH]	[mH]	[r/min]	[kg]
MCA20X14...2F□□	0.37	0.73	1.10	0.36	2.01	60.2	2.14	6500	64.0
MCA20X29...2F□□	0.090	0.18	0.28	0.090	0.50	14.3	0.54		
MCA22P08...2F□□	0.54	1.07	1.62	0.48	3.50	91.9	4.74		105
MCA22P14...2F□□		0.36	0.54		3.55	90.9	4.79		
MCA22P17...2F□□	0.13	0.27	0.40	0.12	0.90	23.5	1.22		
MCA22P29...2F□□		0.080	0.12			22.9	1.21		
MCA26T05...2F□□	0.29	0.59	0.89	0.25	3.11	72.1	5.08		194
MCA26T10...2F□□		0.20	0.30		3.17	71.4	5.14		
MCA26T12...2F□□	0.080	0.15	0.23	0.062	0.78	18.6	1.30		
MCA26T22...2F□□		0.050	0.077			20.2			

[1] Without brake.
[2] Mechanically permissible maximum speed.
The data in the R_1, $L_{1\sigma}$, L, R_2' and $L_{2\sigma}'$ columns is based on a single-phase equivalent circuit diagram at 20°C.

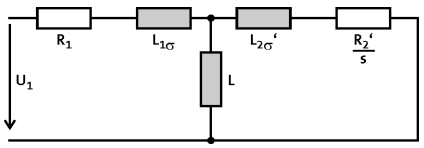



Selection tables, Servo Drives 9400 HighLine

Non-ventilated motors

► The data applies to a mains connection voltage of 3 x 400 V and an inverter switching frequency of 4 kHz.

					E94A□□	E0024	E0034	E0044	E0074	E0094	E0134	E0174	E0244	E0324
					I_N	1.9	3.1	5.0	8.8	11.7	16.3	20.6	29.4	38.4
					$I_{0,max}$	6.0	10.0	16.0	21.0	28.0	39.0	49.5	58.8	76.8
MCA	**M_N**	**n_N**	**I_N**	**P_N**	I_{max}	6.0	10.0	16.0	21.0	28.0	39.0	49.5	58.8	76.8
10I40	2.0	3950	2.4	0.80	M_0	1.1	2.3							
					M_N	1.0	2.0							
					$M_{0,max}$	6.9	10.0							
					M_{max}	6.9	10.0							
					n_{eto}	-	-							
13I41	4.0	4050	4.4	1.70	M_0			4.6	4.6					
					M_N			4.0	4.0					
					$M_{0,max}$			18.9	20.8					
					M_{max}			18.9	20.8					
					n_{eto}			-	-					
14L20	6.7	2000	3.3	1.40	M_0		5.1	8.0						
					M_N		4.4	6.7						
					$M_{0,max}$		25.0	42.8						
					M_{max}		25.0	42.8						
					n_{eto}		-	-						
14L41	5.4	4100	5.8	2.30	M_0			3.5	8.0	8.0				
					M_N			3.5	5.4	5.4				
					$M_{0,max}$			21.5	27.0	31.3				
					M_{max}			21.5	27.0	31.3				
					n_{eto}			-	-	-				
17N23	10.8	2300	5.5	2.60	M_0			9.5	12.8					
					M_N			9.0	10.8					
					$M_{0,max}$			38.0	50.0					
					M_{max}			38.0	50.0					
					n_{eto}			-	-					
17N41	9.5	4110	10.2	4.10	M_0				7.1	11.5	12.8	12.8		
					M_N				6.7	9.5	9.5	9.5		
					$M_{0,max}$				24.0	33.3	45.8	49.9		
					M_{max}				24.0	33.3	45.8	49.9		
					n_{eto}				-	-	-	-		
19S23	16.3	2340	8.2	4.00	M_0				18.4	22.5	22.5			
					M_N				15.6	16.3	16.3			
					$M_{0,max}$				55.0	73.7	86.0			
					M_{max}				55.0	73.7	86.0			
					n_{eto}				-	-	-			
19S42	12.0	4150	14.0	5.20	M_0						15.0	22.5	22.5	
					M_N						12.0	12.0	12.0	
					$M_{0,max}$						48.8	62.0	70.0	
					M_{max}						48.8	62.0	70.0	
					n_{eto}						-	-	-	
21X25	24.6	2490	13.5	6.40	M_0					21.4	39.0	39.0	39.0	
					M_N					19.6	24.6	24.6	24.6	
					$M_{0,max}$					71.7	96.0	126.0	136.0	
					M_{max}					71.7	96.0	126.0	136.0	
					n_{eto}					-	-	-	-	

► I... [A], M... [Nm], n... [r/min], P... [kW]



Selection tables, Servo Drives 9400 HighLine

Non-ventilated motors

► The data applies to a mains connection voltage of 3 x 400 V and an inverter switching frequency of 4 kHz.

					E94A□□	E0024	E0034	E0044	E0074	E0094	E0134	E0174	E0244	E0324
					I_N	1.9	3.1	5.0	8.8	11.7	16.3	20.6	29.4	38.4
					$I_{0,max}$	6.0	10.0	16.0	21.0	28.0	39.0	49.5	58.8	76.8
MCA	**M_N**	**n_N**	**I_N**	**P_N**	I_{max}	6.0	10.0	16.0	21.0	28.0	39.0	49.5	58.8	76.8
21X42	17.0	4160	19.8	7.40	M_0								31.3	39.0
					M_N								17.0	17.0
					$M_{0,max}$								71.7	91.0
					M_{max}								71.7	91.0
					n_{eto}								-	-

► I... [A], M... [Nm], n... [r/min], P... [kW]



Selection tables, Servo Drives 9400 HighLine

Forced ventilated IP54 motors

► The data applies to a mains connection voltage of 3 x 400 V and an inverter switching frequency of 4 kHz.

					E94A□□	E0044	E0074	E0094	E0134	E0174	E0244	E0324	E0474	E0594	E0864
					I_N	5.0	8.8	11.7	16.3	20.6	29.4	38.4	47.0	59.0	86.0
					$I_{0,max}$	16.0	21.0	28.0	39.0	49.5	58.8	76.8	94.0	118.0	172.0
MCA	**M_N**	**n_N**	**I_N**	**P_N**	I_{max}	16.0	21.0	28.0	39.0	49.5	58.8	76.8	94.0	118.0	172.0
13I34	6.3	3410	6.0	2.20	M_0	4.6	7.0	7.0							
					M_N	4.4	6.3	6.3							
					$M_{0,max}$	20.8	26.0	29.2							
					M_{max}	20.8	26.0	29.2							
					n_{eto}	-	-	-							
14L16	12.0	1635	4.8	2.10	M_0	12.0	13.5								
					M_N	12.0	12.0								
					$M_{0,max}$	45.4	52.6								
					M_{max}	45.4	52.6								
					n_{eto}	-	-								
14L35	10.8	3455	9.1	3.90	M_0		10.1	13.5	13.5						
					M_N		9.7	10.8	10.8						
					$M_{0,max}$		32.4	46.0	60.0						
					M_{max}		32.4	46.0	60.0						
					n_{eto}		-	-	-						
17N17	21.5	1680	8.5	3.80	M_0		21.6	23.9	23.9						
					M_N		21.5	21.5	21.5						
					$M_{0,max}$		59.4	81.4	84.5						
					M_{max}		59.4	81.4	84.5						
					n_{eto}		-	-	-						
17N35	19.0	3480	15.8	6.90	M_0				19.4	23.9	23.9				
					M_N				19.0	19.0	19.0				
					$M_{0,max}$				59.2	75.0	90.0				
					M_{max}				59.2	75.0	90.0				
					n_{eto}				-	-	-				
19S17	36.3	1700	13.9	6.40	M_0				40.0	40.0	40.0				
					M_N				36.3	36.3	36.3				
					$M_{0,max}$				105.0	133.0	148.0				
					M_{max}				105.0	133.0	148.0				
					n_{eto}				-	-	-				
19S35	36.0	3510	28.7	13.20	M_0						36.9	40.0	40.0	40.0	
					M_N						36.0	36.0	36.0	36.0	
					$M_{0,max}$						82.0	112.0	132.0	160.0	
					M_{max}						82.0	112.0	132.0	160.0	
					n_{eto}						-	-	-	-	
21X17	61.4	1710	22.5	11.00	M_0					54.4	75.0	75.0	75.0		
					M_N					50.4	61.4	61.4	61.4		
					$M_{0,max}$					134.0	158.0	215.0	246.0		
					M_{max}					134.0	158.0	215.0	246.0		
					n_{eto}					-	-	-	-		
21X35	55.0	3520	42.5	20.30	M_0								63.9	75.0	75.0
					M_N								55.0	55.0	55.0
					$M_{0,max}$								134.0	167.0	232.0
					M_{max}								134.0	167.0	232.0
					n_{eto}								-	-	-

► I... [A], M... [Nm], n... [r/min], P... [kW]



Selection tables, Servo Drives 9400 HighLine

Forced ventilated IP54 motors

► The data applies to a mains connection voltage of 3 x 400 V and an inverter switching frequency of 8 kHz.

					E94A□□	E0174	E0244	E0324	E0474	E0594	E0864	E1044	E1454	E1724	E2024	E2454
					I_N	16.5	23.5	32.0	41.0	41.0	73.0	78.0	102.0	120.0	131.0	160.0
					$I_{0,max}$	49.5	58.8	76.8	94.0	118.0	172.0	208.0	261.0	310.0	364.0	441.0
MCA	**M_N**	**n_N**	**I_N**	**P_N**	I_{max}	49.5	58.8	76.8	94.0	118.0	172.0	208.0	261.0	310.0	364.0	441.0
22P08-...5F□□	110.0	760	22.1	8.80	M_0	64.0	110.0	120.0								
					M_N	64.0	110.0	110.0								
					$M_{0,max}$	261.0	313.0	402.0								
					M_{max}	261.0	313.0	402.0								
					n_{eto}	-	-	-								
22P14-...5F□□	107.0	1425	37.7	16.00	M_0			82.0	120.0	120.0						
					M_N			82.0	107.0	107.0						
					$M_{0,max}$			242.0	300.0	372.0						
					M_{max}			242.0	300.0	372.0						
					n_{eto}			-	-	-						
22P17-...5F□□	105.0	1670	42.7	18.50	M_0					99.0	120.0					
					M_N					99.0	106.0					
					$M_{0,max}$					325.0	463.0					
					M_{max}					325.0	463.0					
					n_{eto}					-	-					
22P29-...5F□□	100.0	2935	72.1	30.70	M_0							110.0	120.0	120.0		
					M_N							100.0	100.0	100.0		
					$M_{0,max}$							335.0	416.0	465.0		
					M_{max}							335.0	416.0	465.0		
					n_{eto}							-	-	-		
26T05-...5F□□	216.0	550	34.9	12.40	M_0			191.0	220.0	220.0	220.0					
					M_N			191.0	216.0	216.0	216.0					
					$M_{0,max}$			531.0	665.0	826.0	1010.0					
					M_{max}			531.0	665.0	826.0	1010.0					
					n_{eto}			-	-	-	-					
26T10-...5F□□	210.0	1030	61.5	22.70	M_0					77.0	220.0	220.0	220.0			
					M_N					77.0	210.0	210.0	210.0			
					$M_{0,max}$					472.0	713.0	855.0	1044.0			
					M_{max}					472.0	713.0	855.0	1044.0			
					n_{eto}					-	-	-	-			
26T12-...5F□□	207.0	1200	75.1	26.00	M_0						204.0	219.0	220.0	220.0		
					M_N						204.0	207.0	207.0	207.0		
					$M_{0,max}$						502.0	609.0	739.0	819.0		
					M_{max}						502.0	609.0	739.0	819.0		
					n_{eto}						-	-	-	-		
26T22-...5F□□	195.0	2235	112.9	45.60	M_0								154.0	211.0	220.0	220.0
					M_N								154.0	195.0	195.0	195.0
					$M_{0,max}$								523.0	611.0	711.0	843.0
					M_{max}								523.0	611.0	711.0	843.0
					n_{eto}								-	-	-	-

► I... [A], M... [Nm], n... [r/min], P... [kW]
► If the motors are operated at a lower switching frequency, please contact your Lenze sales office!
► When operating at 4 kHz, the motor generates just 95 % of its rated torque with increased noise emissions.



Selection tables, Servo Drives 9400 HighLine

Forced ventilated IP23s motors

► The data applies to a mains connection voltage of 3 x 400 V and an inverter switching frequency of 8 kHz.

					E94A□□	E0174	E0244	E0324	E0474	E0594	E0864	E1044	E1454	E1724	E2024	E2454	E2924
					I_N	16.5	23.5	32.0	41.0	41.0	73.0	78.0	102.0	120.0	131.0	160.0	191.0
					$I_{0,max}$	49.5	58.8	76.8	94.0	118.0	172.0	208.0	261.0	310.0	364.0	441.0	526.0
MCA	**M_N**	**n_N**	**I_N**	**P_N**	I_{max}	49.5	58.8	76.8	94.0	118.0	172.0	208.0	261.0	310.0	364.0	441.0	526.0
20X14-...2F□□	61.0	1420	23.0	9.10	M_0	32.5	66.0										
					M_N	32.5	61.0										
					$M_{0,max}$	154.2	190.0										
					M_{max}	154.2	190.0										
					n_{eto}	-	-										
20X29-...2F□□	53.5	2930	42.4	16.40	M_0			28.0	51.6	51.6							
					M_N			28.0	51.6	51.6							
					$M_{0,max}$			116.0	148.2	192.8							
					M_{max}			116.0	148.2	192.8							
					n_{eto}			-	-	-							
22P08-...2F□□	120.0	760	23.5	9.60	M_0		120.0	135.0									
					M_N		120.0	120.0									
					$M_{0,max}$		313.0	402.0									
					M_{max}		313.0	402.0									
					n_{eto}		-	-									
22P14-...2F□□	115.0	1425	40.0	17.20	M_0				118.0	118.0							
					M_N				115.0	115.0							
					$M_{0,max}$				300.0	372.0							
					M_{max}				300.0	372.0							
					n_{eto}				-	-							
22P17-...2F□□	112.0	1670	44.5	19.60	M_0					99.0	135.0						
					M_N					99.0	112.0						
					$M_{0,max}$					325.0	463.0						
					M_{max}					325.0	463.0						
					n_{eto}					-	-						
22P29-...2F□□	110.0	2935	77.8	33.80	M_0							110.0	135.0	135.0			
					M_N							110.0	110.0	110.0			
					$M_{0,max}$							335.0	416.0	486.0			
					M_{max}							335.0	416.0	486.0			
					n_{eto}							-	-	-			
26T05-...2F□□	280.0	550	42.4	16.10	M_0				268.0	268.0	290.0						
					M_N				268.0	268.0	280.0						
					$M_{0,max}$				665.0	826.0	1100.0						
					M_{max}				665.0	826.0	1100.0						
					n_{eto}				-	-	-						
26T10-...2F□□	260.0	1030	69.6	28.00	M_0						270.0	290.0	290.0				
					M_N						260.0	260.0	260.0				
					$M_{0,max}$						713.0	855.0	1044.0				
					M_{max}						713.0	855.0	1044.0				
					n_{eto}						-	-	-				

► I... [A], M... [Nm], n... [r/min], P... [kW]
► If the motors are operated at a lower switching frequency, please contact your Lenze sales office!
► When operating at 4 kHz, the motor generates just 95 % of its rated torque with increased noise emissions.



Selection tables, Servo Drives 9400 HighLine

Forced ventilated IP23s motors

► The data applies to a mains connection voltage of 3 x 400 V and an inverter switching frequency of 8 kHz.

					E94A□□	E0174	E0244	E0324	E0474	E0594	E0864	E1044	E1454	E1724	E2024	E2454	E2924
					I_N	16.5	23.5	32.0	41.0	41.0	73.0	78.0	102.0	120.0	131.0	160.0	191.0
					$I_{0,max}$	49.5	58.8	76.8	94.0	118.0	172.0	208.0	261.0	310.0	364.0	441.0	526.0
MCA	**M_N**	**n_N**	**I_N**	**P_N**	**I_{max}**	49.5	58.8	76.8	94.0	118.0	172.0	208.0	261.0	310.0	364.0	441.0	526.0
26T12-...2F□□	255.0	1200	83.3	32.00	M_0						204.0	219.0	290.0	290.0	290.0		
					M_N						204.0	219.0	255.0	255.0	255.0		
					$M_{0,max}$						502.0	609.0	739.0	840.0	896.0		
					M_{max}						502.0	609.0	739.0	840.0	896.0		
					n_{eto}						-	-	-	-	-		
26T22-...2F□□	230.0	2235	126.7	53.80	M_0									211.0	242.0	290.0	290.0
					M_N									211.0	230.0	230.0	230.0
					$M_{0,max}$									611.0	711.0	843.0	1001.0
					M_{max}									611.0	711.0	843.0	1001.0
					n_{eto}									-	-	-	-

► I... [A], M... [Nm], n... [r/min], P... [kW]
► If the motors are operated at a lower switching frequency, please contact your Lenze sales office!
► When operating at 4 kHz, the motor generates just 95 % of its rated torque with increased noise emissions.





Selection tables, Inverter Drives 8400 TopLine

Non-ventilated motors

► The data applies to a mains connection voltage of 3 x 400 V and an inverter switching frequency of 8 kHz.

					E84AVTC	□5514	□7514	□1124	□1524	□2224	□3024	□4024	□5524	□7524	□1134	□1534	□1834
					I_N	1.8	2.4	3.2	3.9	5.9	7.3	9.5	13.0	16.5	23.5	32.0	39.0
					$I_{0,max}$	2.7	3.6	4.8	5.9	8.4	11.0	14.3	19.5	26.4	32.9	43.2	60.0
MCA	M_N	n_N	I_N	P_N	I_{max}	3.6	4.8	6.4	7.8	11.8	14.6	19.0	26.0	33.0	47.0	64.0	78.0
10I40	2.0	3950	2.4	0.80	M_0	-	2.3	2.3	2.3	2.3							
					M_N	-	1.9	1.9	1.9	1.9							
					$M_{0,max}$	4.2	5.8	8.0	9.8	10.0							
					M_{max}	4.2	5.8	8.0	9.8	10.0							
					n_{eto}	-	-	-	-	-							
13I41	4.0	4050	4.4	1.70	M_0			-	-	4.6	4.6	4.6					
					M_N			-	-	4.0	4.0	4.0					
					$M_{0,max}$			7.6	9.6	14.3	18.9	22.9					
					M_{max}			7.6	9.6	14.3	18.9	22.9					
					n_{eto}			-	-	-	-	-					
14L20	6.7	2000	3.3	1.40	M_0		-	-	8.0	8.0	8.0						
					M_N		-	-	6.7	6.7	6.7						
					$M_{0,max}$		11.6	16.2	20.1	29.4	34.7						
					M_{max}		11.6	16.2	20.1	29.4	34.7						
					n_{eto}		-	-	-	-	-						
14L41	5.4	4100	5.8	2.30	M_0					-	8.0	8.0	8.0				
					M_N					-	5.4	5.4	5.4				
					$M_{0,max}$					14.1	19.0	25.1	31.0				
					M_{max}					14.1	19.0	25.1	31.0				
					n_{eto}					-	-	-	-				
17N23	10.8	2300	5.5	2.60	M_0				-	12.8	12.8	12.8	12.8				
					M_N				-	10.8	10.8	10.8	10.8				
					$M_{0,max}$				17.1	25.3	33.3	43.8	51.1				
					M_{max}				17.1	25.3	33.3	43.8	51.1				
					n_{eto}				-	-	-	-	-				
17N41	9.5	4110	10.2	4.10	M_0						-	-	12.8	12.8	12.8		
					M_N						-	-	9.5	9.5	9.5		
					$M_{0,max}$						16.5	22.3	31.1	39.9	49.5		
					M_{max}						16.5	22.3	31.1	39.9	49.5		
					n_{eto}						-	-	-	-	-		
19S23	16.3	2340	8.2	4.00	M_0						-	22.5	22.5	22.5			
					M_N						-	16.3	16.3	16.3			
					$M_{0,max}$						32.8	43.6	60.9	77.5			
					M_{max}						32.8	43.7	61.0	77.5			
					n_{eto}						-	-	-	-			
19S42	12.0	4150	14.0	5.20	M_0								-	22.5	22.5	22.5	
					M_N								-	12.0	12.0	12.0	
					$M_{0,max}$								28.5	37.0	53.7	64.7	
					M_{max}								28.5	37.0	53.8	64.7	
					n_{eto}								-	-	-	-	
21X25	24.6	2490	13.5	6.40	M_0							-	-	39.0	39.0	39.0	
					M_N							-	-	24.5	24.5	24.5	
					$M_{0,max}$							33.6	46.7	59.3	85.9	97.3	
					M_{max}							33.6	46.7	59.3	85.9	97.6	
					n_{eto}							-	-	-	-	-	

► I... [A], M... [Nm], n... [r/min], P... [kW]



Selection tables, Inverter Drives 8400 TopLine

Non-ventilated motors

► The data applies to a mains connection voltage of 3 x 400 V and an inverter switching frequency of 8 kHz.

					E84AVTC	□5514	□7514	□1124	□1524	□2224	□3024	□4024	□5524	□7524	□1134	□1534	□1834
					I_N	1.8	2.4	3.2	3.9	5.9	7.3	9.5	13.0	16.5	23.5	32.0	39.0
					$I_{0,max}$	2.7	3.6	4.8	5.9	8.4	11.0	14.3	19.5	26.4	32.9	43.2	60.0
MCA	**M_N**	**n_N**	**I_N**	**P_N**	I_{max}	3.6	4.8	6.4	7.8	11.8	14.6	19.0	26.0	33.0	47.0	64.0	78.0
21X42	17.0	4160	19.8	7.40	M_0									-	39.0	39.0	39.0
					M_N									-	17.0	17.0	17.0
					$M_{0,max}$									35.3	52.2	72.1	88.5
					M_{max}									35.3	52.2	72.1	88.5
					n_{eto}									-	-	-	-

► I... [A], M... [Nm], n... [r/min], P... [kW]



Selection tables, Inverter Drives 8400 TopLine

Forced ventilated IP54 motors

► The data applies to a mains connection voltage of 3 x 400 V and an inverter switching frequency of 8 kHz.

					E84AVTC	□1524	□2224	□3024	□4024	□5524	□7524
					I_N	3.9	5.9	7.3	9.5	13.0	16.5
					$I_{0,max}$	5.9	8.4	11.0	14.3	19.5	26.4
MCA	M_N	n_N	I_N	P_N	I_{max}	7.8	11.8	14.6	19.0	26.0	33.0
13I34	6.3	3410	6.0	2.20	M_0		-	7.0	7.0	7.0	
					M_N		-	6.2	6.2	6.2	
					$M_{0,max}$		16.0	21.4	28.2	32.0	
					M_{max}		16.0	21.4	28.2	32.0	
					n_{eto}		-	-	-	-	
14L16	12.0	1635	4.8	2.10	M_0	-	13.5	13.5	13.5		
					M_N	-	12.3	12.3	12.3		
					$M_{0,max}$	23.4	34.7	45.5	50.8		
					M_{max}	23.4	34.7	45.5	50.8		
					n_{eto}	-	-	-	-		
14L35	10.8	3455	9.1	3.90	M_0			-	13.5	13.5	13.5
					M_N			-	10.8	10.8	10.8
					$M_{0,max}$			21.1	28.4	39.8	51.1
					M_{max}			21.1	28.4	39.8	51.1
					n_{eto}			-	-	-	-
17N17	21.5	1680	8.5	3.80	M_0			-	23.9	23.9	23.9
					M_N			-	21.6	21.6	21.6
					$M_{0,max}$			42.1	55.9	77.5	93.3
					M_{max}			42.2	56.0	77.5	93.3
					n_{eto}			-	-	-	-
17N35	19.0	3480	15.8	6.90	M_0					-	23.9
					M_N					-	18.9
					$M_{0,max}$					38.0	49.5
					M_{max}					38.0	49.5
					n_{eto}					-	-
19S17	36.3	1700	13.9	6.40	M_0					-	40.0
					M_N					-	36.0
					$M_{0,max}$					71.6	94.7
					M_{max}					71.6	94.7
					n_{eto}					-	-
19S35	36.0	3510	28.7	13.20	M_0						
					M_N						
					$M_{0,max}$						
					M_{max}						
					n_{eto}						
21X17	61.4	1710	22.5	11.00	M_0						-
					M_N						-
					$M_{0,max}$						99.0
					M_{max}						99.0
					n_{eto}						-
21X35	55.0	3520	42.5	20.30	M_0						
					M_N						
					$M_{0,max}$						
					M_{max}						
					n_{eto}						

► I... [A], M... [Nm], n... [r/min], P... [kW]



Selection tables, Inverter Drives 8400 TopLine

Forced ventilated IP54 motors

► The data applies to a mains connection voltage of 3 x 400 V and an inverter switching frequency of 8 kHz.

□1134	□1534	□1834	□2234	□3034	□3734	□4534	E84AVTC					
23.5	32.0	39.0	47.0	61.0	76.0	89.0	I_N					
32.9	43.2	60.0	70.5	91.5	114.0	133.5	$I_{0,max}$					
47.0	64.0	78.0	94.0	122.0	152.0	178.0	I_{max}	P_N	I_N	n_N	M_N	MCA
							M_0	2.20	6.0	3410	6.3	13I34
							M_N					
							$M_{0,max}$					
							M_{max}					
							n_{eto}					
							M_0	2.10	4.8	1635	12.0	14L16
							M_N					
							$M_{0,max}$					
							M_{max}					
							n_{eto}					
13.5							M_0	3.90	9.1	3455	10.8	14L35
10.8							M_N					
56.5							$M_{0,max}$					
56.6							M_{max}					
-							n_{eto}					
							M_0	3.80	8.5	1680	21.5	17N17
							M_N					
							$M_{0,max}$					
							M_{max}					
							n_{eto}					
23.9	23.9						M_0	6.90	15.8	3480	19.0	17N35
18.9	18.9						M_N					
72.5	97.8						$M_{0,max}$					
72.5	97.8						M_{max}					
-	-						n_{eto}					
40.0	40.0						M_0	6.40	13.9	1700	36.3	19S17
36.0	36.0						M_N					
138.9	165.2						$M_{0,max}$					
139.0	165.3						M_{max}					
-	-						n_{eto}					
-	40.0	40.0	40.0	40.0			M_0	13.20	28.7	3510	36.0	19S35
-	35.9	35.9	35.9	35.9			M_N					
55.1	78.8	97.8	112.8	146.2			$M_{0,max}$					
55.1	78.8	97.8	112.9	146.2			M_{max}					
-	-	-	-	-			n_{eto}					
75.0	75.0	75.0	75.0				M_0	11.00	22.5	1710	61.4	21X17
61.4	61.4	61.4	61.4				M_N					
143.7	198.5	242.2	277.2				$M_{0,max}$					
144.0	198.7	242.3	277.2				M_{max}					
-	-	-	-				n_{eto}					
	-	-	75.0	75.0	75.0	75.0	M_0	20.30	42.5	3520	55.0	21X35
	-	-	55.1	55.1	55.1	55.1	M_N					
	97.5	120.6	138.5	177.5	216.7	267.8	$M_{0,max}$					
	97.5	120.6	138.6	178.0	217.5	269.8	M_{max}					
	-	-	-	-	-	-	n_{eto}					

► I... [A], M... [Nm], n... [r/min], P... [kW]



Selection tables, Inverter Drives 8400 TopLine

Forced ventilated IP54 motors

► The data applies to a mains connection voltage of 3 x 400 V and an inverter switching frequency of 8 kHz.

					E84AVTC	□7524	□1134	□1534	□1834	□2234	□3034	□3734	□4534
					I_N	16.5	23.5	32.0	39.0	47.0	61.0	76.0	89.0
					$I_{0,max}$	26.4	32.9	43.2	60.0	70.5	91.5	114.0	133.5
MCA	**M_N**	**n_N**	**I_N**	**P_N**	I_{max}	33.0	47.0	64.0	78.0	94.0	122.0	152.0	178.0
22P08-...5F□□	110.0	760	22.1	8.80	M_0	-	120.0	120.0	120.0	120.0			
					M_N	-	110.6	110.6	110.6	110.6			
					$M_{0,max}$	157.8	233.4	323.3	396.6	394.3			
					M_{max}	157.8	233.5	323.3	396.6	394.3			
					n_{eto}	-	-	-	-	-			
22P14-...5F□□	107.0	1425	37.7	16.00	M_0			-	120.0	120.0	120.0	120.0	120.0
					M_N			-	107.2	107.2	107.2	107.2	107.2
					$M_{0,max}$			186.5	232.5	268.8	345.7	422.7	458.8
					M_{max}			186.7	232.7	269.0	346.3	423.7	460.9
					n_{eto}			-	-	-	-	-	-
22P17-...5F□□	105.0	1670	42.7	18.50	M_0			-	-	120.0	120.0	120.0	120.0
					M_N			-	-	105.8	105.8	105.8	105.8
					$M_{0,max}$			162.7	204.2	236.9	307.8	374.9	461.2
					M_{max}			162.7	204.2	237.1	308.3	377.0	462.4
					n_{eto}			-	-	-	-	-	-
22P29-...5F□□	100.0	2935	72.1	30.70	M_0						-	120.0	120.0
					M_N						-	99.9	99.9
					$M_{0,max}$						180.5	224.5	270.5
					M_{max}						180.8	226.0	271.4
					n_{eto}						-	-	-

► I... [A], M... [Nm], n... [r/min], P... [kW]
► If the motors are operated at a lower switching frequency, please contact your Lenze sales office!



Selection tables, Inverter Drives 8400 TopLine

Forced ventilated IP23s motors

► The data applies to a mains connection voltage of 3 x 400 V and an inverter switching frequency of 8 kHz.

					E84AVTC	□7524	□1134	□1534	□1834	□2234	□3034	□3734	□4534
					I_N	16.5	23.5	32.0	39.0	47.0	61.0	76.0	89.0
					$I_{0,max}$	26.4	32.9	43.2	60.0	70.5	91.5	114.0	133.5
MCA	**M_N**	**n_N**	**I_N**	**P_N**	I_{max}	33.0	47.0	64.0	78.0	94.0	122.0	152.0	178.0
20X14-...2F□□	61.0	1420	23.0	9.10	M_0	-	67.0	68.0	68.0	68.0			
					M_N	-	61.2	61.2	61.2	61.2			
					$M_{0,max}$	94.8	139.9	192.6	235.5	250.0			
					M_{max}	94.9	139.9	192.8	235.7	250.0			
					n_{eto}	-	-	-	-	-			
20X29-...2F□□	53.5	2930	42.4	16.40	M_0			-	-	57.0	68.0	68.0	68.0
					M_N			-	-	53.4	53.4	53.4	53.4
					$M_{0,max}$			96.8	121.2	140.3	182.5	222.1	250.0
					M_{max}			96.8	121.2	140.4	182.6	223.0	250.0
					n_{eto}			-	-	-	-	-	-
22P08-...2F□□	120.0	760	23.5	9.60	M_0	-	135.0	135.0	135.0	135.0			
					M_N	-	120.6	120.6	120.6	120.6			
					$M_{0,max}$	157.8	234.2	325.4	401.4	400.9			
					M_{max}	157.8	234.8	325.8	401.4	400.9			
					n_{eto}	-	-	-	-	-			
22P14-...2F□□	115.0	1425	40.0	17.20	M_0			-	-	135.0	135.0	135.0	135.0
					M_N			-	-	115.3	115.3	115.3	115.3
					$M_{0,max}$			188.4	235.1	270.8	350.2	425.8	493.6
					M_{max}			188.7	235.1	271.0	350.3	428.1	496.1
					n_{eto}			-	-	-	-	-	-
22P17-...2F□□	112.0	1670	44.5	19.60	M_0			-	-	135.0	135.0	135.0	135.0
					M_N			-	-	112.1	112.1	112.1	112.1
					$M_{0,max}$			163.1	204.6	237.9	309.7	376.9	463.1
					M_{max}			163.1	204.6	238.2	310.6	379.0	465.2
					n_{eto}			-	-	-	-	-	-
22P29-...2F□□	110.0	2935	77.8	33.80	M_0						-	-	135.0
					M_N						-	-	110.0
					$M_{0,max}$						180.0	224.4	268.2
					M_{max}						180.7	225.0	269.4
					n_{eto}						-	-	-

► I... [A], M... [Nm], n... [r/min], P... [kW]
► If the motors are operated at a lower switching frequency, please contact your Lenze sales office!



Selection tables, Servo Drives ECS

Non-ventilated motors

► The data applies to a mains connection voltage of 3 x 400 V and an inverter switching frequency of 4 kHz.

					ECS□□	008C□B	016C□B	032C□B	048C□B	064C□B
					I_N	4.0	8.0	12.7	17.0	20.0
					$I_{0,max}$	4.6	9.1	18.1	27.2	36.3
MCA	M_N	n_N	I_N	P_N	I_{max}	8.0	16.0	32.0	48.0	64.0
10I40	2.0	3950	2.4	0.80	M_0	2.3				
					M_N	2.0				
					$M_{0,max}$	5.6				
					M_{max}	8.1				
					n_{eto}	-				
13I41	4.0	4050	4.4	1.70	M_0	3.0	4.6			
					M_N	3.0	4.0			
					$M_{0,max}$	4.3	11.0			
					M_{max}	9.4	18.2			
					n_{eto}	-	-			
14L20	6.7	2000	3.3	1.40	M_0	8.0	8.0			
					M_N	6.7	6.7			
					$M_{0,max}$	10.7	25.3			
					M_{max}	21.6	42.8			
					n_{eto}	-	-			
14L41	5.4	4100	5.8	2.30	M_0		8.0	8.0		
					M_N		5.4	5.4		
					$M_{0,max}$		11.0	24.0		
					M_{max}		20.7	29.1		
					n_{eto}		-	-		
17N23	10.8	2300	5.5	2.60	M_0		12.8	12.8		
					M_N		10.8	10.8		
					$M_{0,max}$		20.5	43.5		
					M_{max}		40.2	63.7		
					n_{eto}		-	-		
17N41	9.5	4110	10.2	4.10	M_0		6.1	12.8	12.8	
					M_N		6.1	9.5	9.5	
					$M_{0,max}$		7.8	21.5	33.5	
					M_{max}		17.4	29.6	57.7	
					n_{eto}		-	-	-	
19S23	16.3	2340	8.2	4.00	M_0		15.1	22.5		
					M_N		15.1	16.3		
					$M_{0,max}$		18.7	43.5		
					M_{max}		38.5	67.9		
					n_{eto}		-	-		
19S42	12.0	4150	14.0	5.20	M_0			9.8	16.7	
					M_N			9.8	12.0	
					$M_{0,max}$			18.4	31.9	
					M_{max}			29.9	58.2	
					n_{eto}			-	-	
21X25	24.6	2490	13.5	6.40	M_0			21.0	39.0	
					M_N			21.0	24.6	
					$M_{0,max}$			41.0	64.5	
					M_{max}			64.4	120.5	
					n_{eto}			-	-	

► I... [A], M... [Nm], n... [r/min], P... [kW]



Selection tables, Servo Drives ECS

Non-ventilated motors

► The data applies to a mains connection voltage of 3 x 400 V and an inverter switching frequency of 4 kHz.

					ECS□□	008C□B	016C□B	032C□B	048C□B	064C□B
					I_N	4.0	8.0	12.7	17.0	20.0
					$I_{0,max}$	4.6	9.1	18.1	27.2	36.3
MCA	**M_N**	**n_N**	**I_N**	**P_N**	I_{max}	8.0	16.0	32.0	48.0	64.0
21X42	17.0	4160	19.8	7.40	M_0				13.0	17.0
					M_N				13.0	17.0
					$M_{0,max}$				30.0	45.0
					M_{max}				59.4	83.0
					n_{eto}				-	-

► I... [A], M... [Nm], n... [r/min], P... [kW]



Selection tables, Servo Drives ECS

Forced ventilated IP54 motors

► The data applies to a mains connection voltage of 3 x 400 V and an inverter switching frequency of 4 kHz.

					ECS□□	008C□B	016C□B	032C□B	048C□B	064C□B
					I_N	4.0	8.0	12.7	17.0	20.0
					$I_{0,max}$	4.6	9.1	18.1	27.2	36.3
MCA	**M_N**	**n_N**	**I_N**	**P_N**	I_{max}	8.0	16.0	32.0	48.0	64.0
13I34	6.3	3410	6.0	2.20	M_0		7.0			
					M_N		6.3			
					$M_{0,max}$		10.7			
					M_{max}		20.8			
					n_{eto}		-			
14L16	12.0	1635	4.8	2.10	M_0	8.9	13.5			
					M_N	8.9	12.0			
					$M_{0,max}$	11.5	25.4			
					M_{max}	21.6	46.7			
					n_{eto}	-	-			
14L35	10.8	3455	9.1	3.90	M_0		8.3	13.5	13.5	
					M_N		8.3	10.8	10.8	
					$M_{0,max}$		11.0	27.0	41.0	
					M_{max}		22.2	42.0	60.0	
					n_{eto}		-	-	-	
17N17	21.5	1680	8.5	3.80	M_0		19.5	23.9		
					M_N		19.5	21.5		
					$M_{0,max}$		23.0	53.0		
					M_{max}		44.8	80.0		
					n_{eto}		-	-		
17N35	19.0	3480	15.8	6.90	M_0			12.7	23.0	
					M_N			12.7	19.0	
					$M_{0,max}$			23.0	37.5	
					M_{max}			37.7	64.4	
					n_{eto}			-	-	
19S17	36.3	1700	13.9	6.40	M_0			28.3	40.0	40.0
					M_N			28.3	36.3	36.3
					$M_{0,max}$			46.5	72.0	98.0
					M_{max}			75.4	130.8	158.9
					n_{eto}			-	-	-
21X17	61.4	1710	22.5	11.00	M_0					52.5
					M_N					52.5
					$M_{0,max}$					107.0
					M_{max}					190.0
					n_{eto}					-

► I... [A], M... [Nm], n... [r/min], P... [kW]



Selection tables, Servo Inverter 9300

Non-ventilated motors

► The data applies to a mains connection voltage of 3 x 400 V and an inverter switching frequency of 8 kHz.

					EVS	9322-E□	9323-E□	9324-E□	9325-E□	9326-E□	9327-E□	9328-E□	9329-E□
					I_N	2.5	3.9	7.0	13.0	23.5	32.0	47.0	59.0
					$I_{0,max}$	3.8	5.9	10.5	19.5	23.5	32.0	47.0	52.0
MCA	M_N	n_N	I_N	P_N	I_{max}	3.8	5.9	10.5	19.5	35.3	48.0	70.5	88.5
10I40	2.0	3950	2.4	0.80	M_0	2.2	2.3						
					M_N	2.0	2.0						
					$M_{0,max}$	4.4	7.3						
					M_{max}	4.4	7.3						
					n_{eto}	-	-						
13I41	4.0	4050	4.4	1.70	M_0			4.6	4.6				
					M_N			4.0	4.0				
					$M_{0,max}$			12.6	19.5				
					M_{max}			12.6	19.5				
					n_{eto}			-	-				
14L20	6.7	2000	3.3	1.40	M_0		8.0	8.0					
					M_N		6.7	6.7					
					$M_{0,max}$		15.1	29.3					
					M_{max}		15.1	29.3					
					n_{eto}		-	-					
14L41	5.4	4100	5.8	2.30	M_0			7.0	8.0				
					M_N			5.4	5.4				
					$M_{0,max}$			13.2	26.0				
					M_{max}			13.2	26.0				
					n_{eto}			-	-				
17N23	10.8	2300	5.5	2.60	M_0			12.8	12.8				
					M_N			10.8	10.8				
					$M_{0,max}$			24.4	46.2				
					M_{max}			24.4	46.2				
					n_{eto}			-	-				
17N41	9.5	4110	10.2	4.10	M_0				12.8	12.8	12.8		
					M_N				9.5	9.5	9.5		
					$M_{0,max}$				23.4	37.0	54.0		
					M_{max}				23.4	43.7	59.4		
					n_{eto}				-	-	-		
19S23	16.3	2340	8.2	4.00	M_0				22.5	22.5			
					M_N				16.3	16.3			
					$M_{0,max}$				47.2	78.0			
					M_{max}				47.2	88.2			
					n_{eto}				-	-			
19S42	12.0	4150	14.0	5.20	M_0				10.0	22.5	22.5		
					M_N				10.0	12.0	12.0		
					$M_{0,max}$				20.7	33.5	51.0		
					M_{max}				20.7	43.3	60.7		
					n_{eto}				-	-	-		
21X25	24.6	2490	13.5	6.40	M_0				23.7	39.0	39.0		
					M_N				23.7	24.6	24.6		
					$M_{0,max}$				46.2	66.0	84.0		
					M_{max}				46.2	78.0	92.4		
					n_{eto}				-	-	-		

► I... [A], M... [Nm], n... [r/min], P... [kW]



Selection tables, Servo Inverter 9300

Non-ventilated motors

► The data applies to a mains connection voltage of 3 x 400 V and an inverter switching frequency of 8 kHz.

					EVS	9322-E□	9323-E□	9324-E□	9325-E□	9326-E□	9327-E□	9328-E□	9329-E□
					I_N	2.5	3.9	7.0	13.0	23.5	32.0	47.0	59.0
					$I_{0,max}$	3.8	5.9	10.5	19.5	23.5	32.0	47.0	52.0
MCA	**M_N**	**n_N**	**I_N**	**P_N**	I_{max}	3.8	5.9	10.5	19.5	35.3	48.0	70.5	88.5
21X42	17.0	4160	19.8	7.40	M_0					24.0	39.0	39.0	39.0
					M_N					17.0	17.0	17.0	17.0
					$M_{0,max}$					24.0	47.0	84.0	94.0
					M_{max}					43.9	63.3	96.8	123.0
					n_{eto}					-	-	-	-

► I... [A], M... [Nm], n... [r/min], P... [kW]



Selection tables, Servo Inverter 9300

Forced ventilated IP54 motors

► The data applies to a mains connection voltage of 3 x 400 V and an inverter switching frequency of 8 kHz.

					EVS	9324-E□	9325-E□	9326-E□	9327-E□	9328-E□	9329-E□	9330-E□	9331-E□
					I_N	7.0	13.0	23.5	32.0	47.0	59.0	89.0	110.0
					$I_{0,max}$	10.5	19.5	23.5	32.0	47.0	52.0	80.0	110.0
MCA	M_N	n_N	I_N	P_N	I_{max}	10.5	19.5	35.3	48.0	70.5	88.5	133.5	165.0
13I34	6.3	3410	6.0	2.20	M_0	7.0	7.0						
					M_N	6.3	6.3						
					$M_{0,max}$	13.0	25.0						
					M_{max}	13.0	25.0						
					n_{eto}	-	-						
14L16	12.0	1635	4.8	2.10	M_0	13.5							
					M_N	12.0							
					$M_{0,max}$	29.6							
					M_{max}	29.6							
					n_{eto}	-							
14L35	10.8	3455	9.1	3.90	M_0		13.5	13.5					
					M_N		10.8	10.8					
					$M_{0,max}$		29.3	47.0					
					M_{max}		29.3	53.8					
					n_{eto}		-	-					
17N17	21.5	1680	8.5	3.80	M_0		23.9						
					M_N		21.5						
					$M_{0,max}$		57.2						
					M_{max}		57.2						
					n_{eto}		-						
17N35	19.0	3480	15.8	6.90	M_0			23.9	23.9	23.9			
					M_N			19.0	19.0	19.0			
					$M_{0,max}$			27.5	57.0	89.0			
					M_{max}			50.7	69.2	100.2			
					n_{eto}			-	-	-			
19S17	36.3	1700	13.9	6.40	M_0		34.0	40.0	40.0				
					M_N		34.0	36.3	36.3				
					$M_{0,max}$		50.1	76.0	112.0				
					M_{max}		50.1	95.9	130.8				
					n_{eto}		-	-	-				
19S35	36.0	3510	28.7	13.20	M_0			21.0	39.0	40.0	40.0	40.0	
					M_N			21.0	36.0	36.0	36.0	36.0	
					$M_{0,max}$			21.0	39.0	73.0	80.0	161.5	
					M_{max}			45.7	67.6	104.3	132.9	180.0	
					n_{eto}			-	-	-	-	-	
21X17	61.4	1710	22.5	11.00	M_0			65.5	75.0	75.0	75.0		
					M_N			61.4	61.4	61.4	61.4		
					$M_{0,max}$			65.5	102.0	178.0	200.0		
					M_{max}			104.1	143.3	210.7	257.3		
					n_{eto}			-	-	-	-		
21X35	55.0	3520	42.5	20.30	M_0					68.0	75.0	75.0	75.0
					M_N					55.0	55.0	55.0	55.0
					$M_{0,max}$					68.0	88.0	156.0	219.0
					M_{max}					107.7	135.9	205.0	250.1
					n_{eto}					-	-	-	-

► I... [A], M... [Nm], n... [r/min], P... [kW]



Selection tables, Servo Inverter 9300

Forced ventilated IP54 motors

► The data applies to a mains connection voltage of 3 x 400 V and an inverter switching frequency of 8 kHz.

					EVS	9326-E□	9327-E□	9328-E□	9329-E□	9330-E□	9331-E□	9332-E□
					I_N	23.5	32.0	47.0	59.0	89.0	110.0	145.0
					$I_{0,max}$	23.5	32.0	47.0	52.0	80.0	110.0	126.0
MCA	M_N	n_N	I_N	P_N	I_{max}	35.3	48.0	70.5	88.5	133.5	165.0	217.5
22P08-...5F□□	110.0	760	22.1	8.80	M_0	115.0	120.0	120.0	120.0			
					M_N	108.0	110.0	110.0	110.0			
					$M_{0,max}$	115.0	166.0	242.0	267.0			
					M_{max}	185.0	247.0	338.8	345.8			
					n_{eto}	-	-	-	-			
22P14-...5F□□	107.0	1425	37.7	16.00	M_0			120.0	120.0	120.0		
					M_N			107.0	107.0	107.0		
					$M_{0,max}$			146.0	160.0	264.0		
					M_{max}			230.1	292.9	341.8		
					n_{eto}			-	-	-		
22P17-...5F□□	105.0	1670	42.7	18.50	M_0			120.0	120.0	120.0	120.0	
					M_N			106.0	106.0	106.0	106.0	
					$M_{0,max}$			124.0	140.0	240.0	335.0	
					M_{max}			180.5	227.7	342.1	378.3	
					n_{eto}			-	-	-	-	
22P29-...5F□□	100.0	2935	72.1	30.70	M_0					118.0	120.0	120.0
					M_N					100.0	100.0	100.0
					$M_{0,max}$					122.0	171.0	200.0
					M_{max}					215.6	273.1	355.1
					n_{eto}					-	-	-
26T05-...5F□□	216.0	550	34.9	12.40	M_0		191.0	220.0	220.0	220.0		
					M_N		191.0	216.0	216.0	216.0		
					$M_{0,max}$		191.0	303.0	333.0	615.0		
					M_{max}		313.0	482.0	612.0	751.0		
					n_{eto}		-	-	-	-		
26T10-...5F□□	210.0	1030	61.5	22.70	M_0				159.0	220.0	220.0	
					M_N				197.0	210.0	210.0	
					$M_{0,max}$				159.0	300.0	440.0	
					M_{max}				343.0	552.0	671.0	
					n_{eto}				-	-	-	
26T12-...5F□□	207.0	1200	75.1	26.00	M_0					207.0	220.0	220.0
					M_N					255.0	207.0	207.0
					$M_{0,max}$					258.0	327.0	397.0
					M_{max}					424.0	512.0	663.0
					n_{eto}					-	-	-
26T22-...5F□□	195.0	2235	112.9	45.60	M_0						177.0	220.0
					M_N						177.0	195.0
					$M_{0,max}$						203.0	220.0
					M_{max}						315.0	432.0
					n_{eto}						-	-

► I... [A], M... [Nm], n... [r/min], P... [kW]
► If the motors are operated at a lower switching frequency, please contact your Lenze sales office!



Selection tables, Servo Inverter 9300

Forced ventilated IP23s motors

► The data applies to a mains connection voltage of 3 x 400 V and an inverter switching frequency of 8 kHz.

					EVS	9326-E□	9327-E□	9328-E□	9329-E□	9330-E□	9331-E□	9332-E□
					I_N	23.5	32.0	47.0	59.0	89.0	110.0	145.0
					$I_{0,max}$	23.5	32.0	47.0	52.0	80.0	110.0	126.0
MCA	M_N	n_N	I_N	P_N	I_{max}	35.3	48.0	70.5	88.5	133.5	165.0	217.5
20X14-...2F□□	61.0	1420	23.0	9.10	M_0	61.0	68.0	68.0				
					M_N	61.0	61.0	61.0				
					$M_{0,max}$	61.0	93.0	153.0				
					M_{max}	109.3	156.7	232.1				
					n_{eto}	-	-	-				
20X29-...2F□□	53.5	2930	42.4	16.40	M_0		28.0	66.3	68.0	68.0		
					M_N		28.0	53.5	53.5	53.5		
					$M_{0,max}$		28.0	66.3	72.0	129.0		
					M_{max}		68.5	112.5	146.4	226.7		
					n_{eto}		-	-	-	-		
22P08-...2F□□	120.0	760	23.5	9.60	M_0	115.0	135.0	135.0	135.0			
					M_N	115.0	120.0	120.0	120.0			
					$M_{0,max}$	115.0	166.0	242.0	267.0			
					M_{max}	185.0	247.0	338.8	345.8			
					n_{eto}	-	-	-	-			
22P14-...2F□□	115.0	1425	40.0	17.20	M_0			135.0	135.0	135.0		
					M_N			115.0	115.0	115.0		
					$M_{0,max}$			146.0	160.0	264.0		
					M_{max}			230.1	292.9	341.8		
					n_{eto}			-	-	-		
22P17-...2F□□	112.0	1670	44.5	19.60	M_0			124.0	134.0	135.0	135.0	
					M_N			112.0	112.0	112.0	112.0	
					$M_{0,max}$			124.0	140.0	240.0	335.0	
					M_{max}			180.5	227.7	342.1	378.3	
					n_{eto}			-	-	-	-	
22P29-...2F□□	110.0	2935	77.8	33.80	M_0					118.0	135.0	135.0
					M_N					110.0	110.0	110.0
					$M_{0,max}$					122.0	171.0	200.0
					M_{max}					215.6	273.1	355.1
					n_{eto}					-	-	-
26T05-...2F□□	280.0	550	42.4	16.10	M_0		191.0	290.0	290.0	290.0		
					M_N		191.0	280.0	280.0	280.0		
					$M_{0,max}$		191.0	303.0	333.0	615.0		
					M_{max}		313.0	482.0	612.0	751.0		
					n_{eto}		-	-	-	-		
26T10-...2F□□	260.0	1030	69.6	28.00	M_0				159.0	290.0	290.0	
					M_N				197.0	260.0	260.0	
					$M_{0,max}$				159.0	300.0	440.0	
					M_{max}				343.0	552.0	671.0	
					n_{eto}				-	-	-	

► I... [A], M... [Nm], n... [r/min], P... [kW]
► If the motors are operated at a lower switching frequency, please contact your Lenze sales office!



Selection tables, Servo Inverter 9300

Forced ventilated IP23s motors

► The data applies to a mains connection voltage of 3 x 400 V and an inverter switching frequency of 8 kHz.

					EVS	9326-E□	9327-E□	9328-E□	9329-E□	9330-E□	9331-E□	9332-E□
					I_N	23.5	32.0	47.0	59.0	89.0	110.0	145.0
					$I_{0,max}$	23.5	32.0	47.0	52.0	80.0	110.0	126.0
MCA	**M_N**	**n_N**	**I_N**	**P_N**	I_{max}	35.3	48.0	70.5	88.5	133.5	165.0	217.5
26T12-...2F□□	255.0	1200	83.3	32.00	M_0					232.0	290.0	290.0
					M_N					255.0	255.0	255.0
					$M_{0,max}$					258.0	327.0	397.0
					M_{max}					424.0	512.0	663.0
					n_{eto}					-	-	-
26T22-...2F□□	230.0	2235	126.7	53.80	M_0						177.0	222.0
					M_N						177.0	230.0
					$M_{0,max}$						203.0	220.0
					M_{max}						315.0	432.0
					n_{eto}						-	-

► I... [A], M... [Nm], n... [r/min], P... [kW]
► If the motors are operated at a lower switching frequency, please contact your Lenze sales office!



Torque characteristics

- The data applies to a mains connection voltage of 3 x 400 V.
- You can find further torque characteristics at **www.lenze.de/dsc**.

MCA10I40 (non-ventilated)

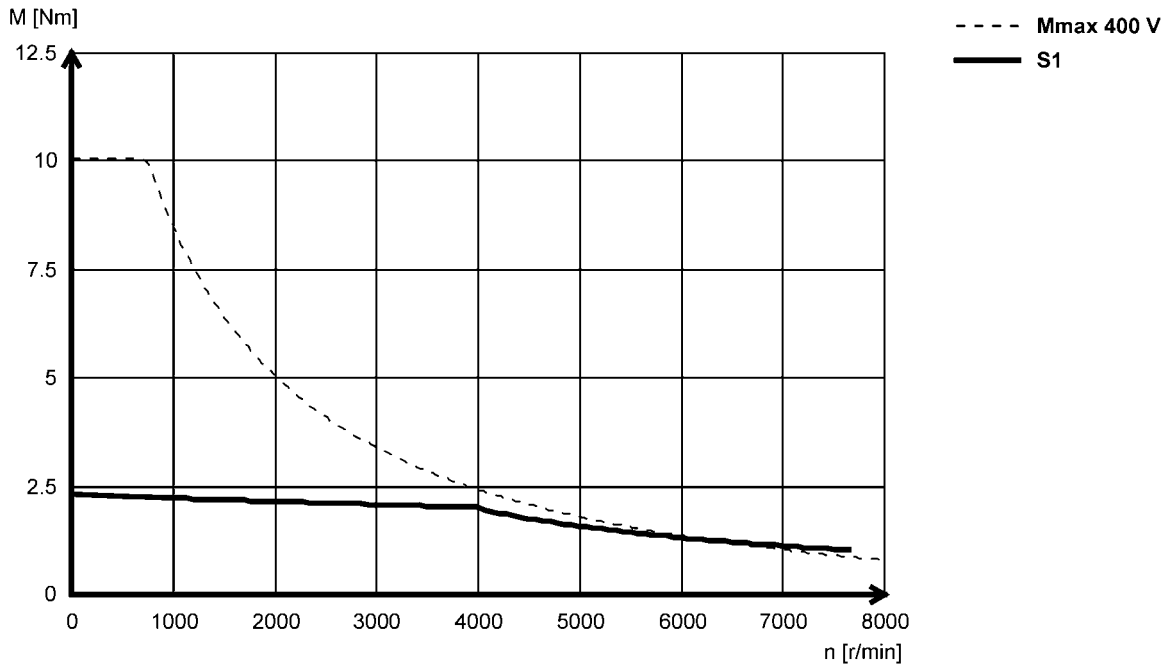



Torque characteristics

- The data applies to a mains connection voltage of 3 x 400 V.
- You can find further torque characteristics at **www.lenze.de/dsc**.

MCA13I34 (forced ventilated)

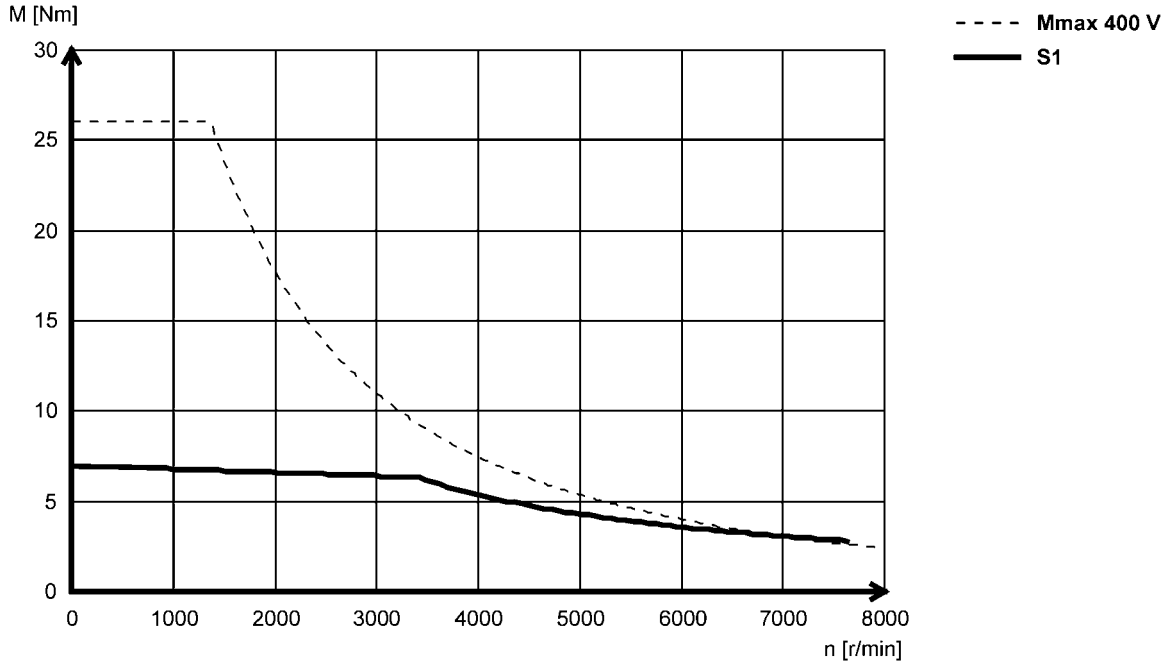

MCA13I41 (non-ventilated)

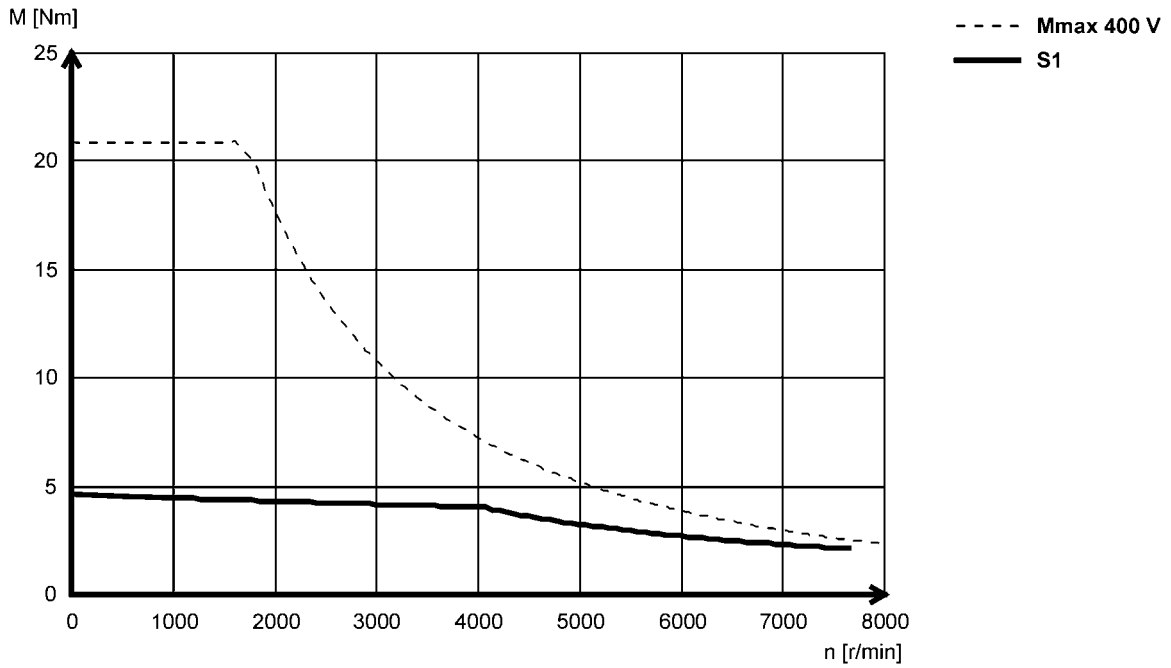



Torque characteristics

- The data applies to a mains connection voltage of 3 x 400 V.
- You can find further torque characteristics at **www.lenze.de/dsc**.

MCA14L16 (forced ventilated)

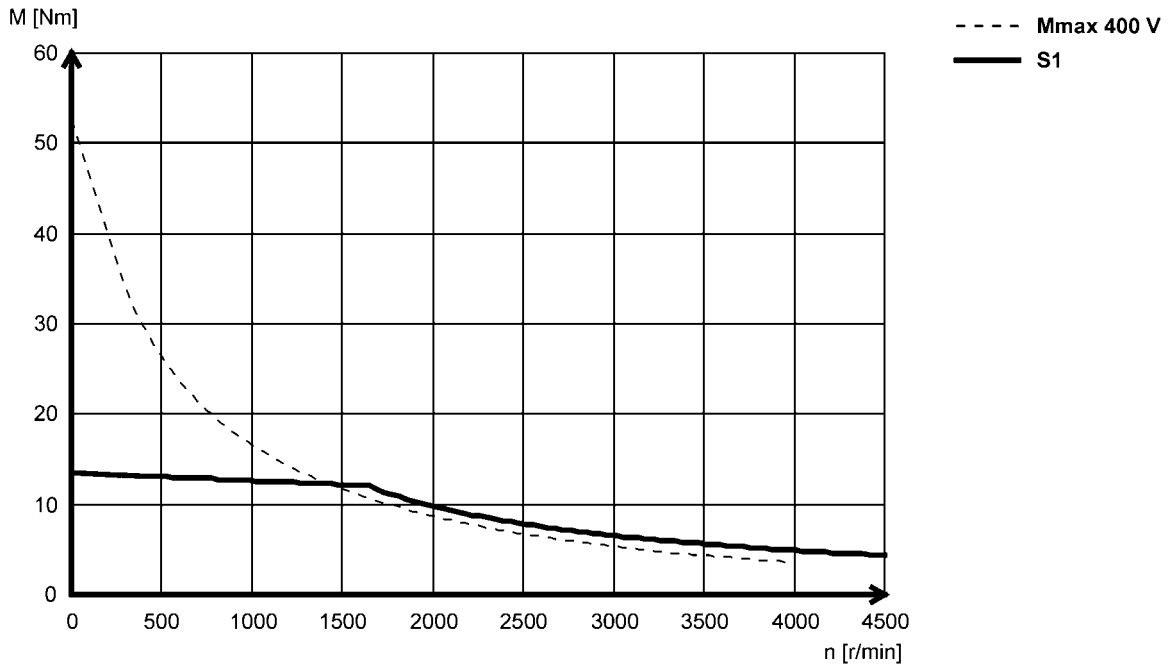

MCA14L20 (non-ventilated)

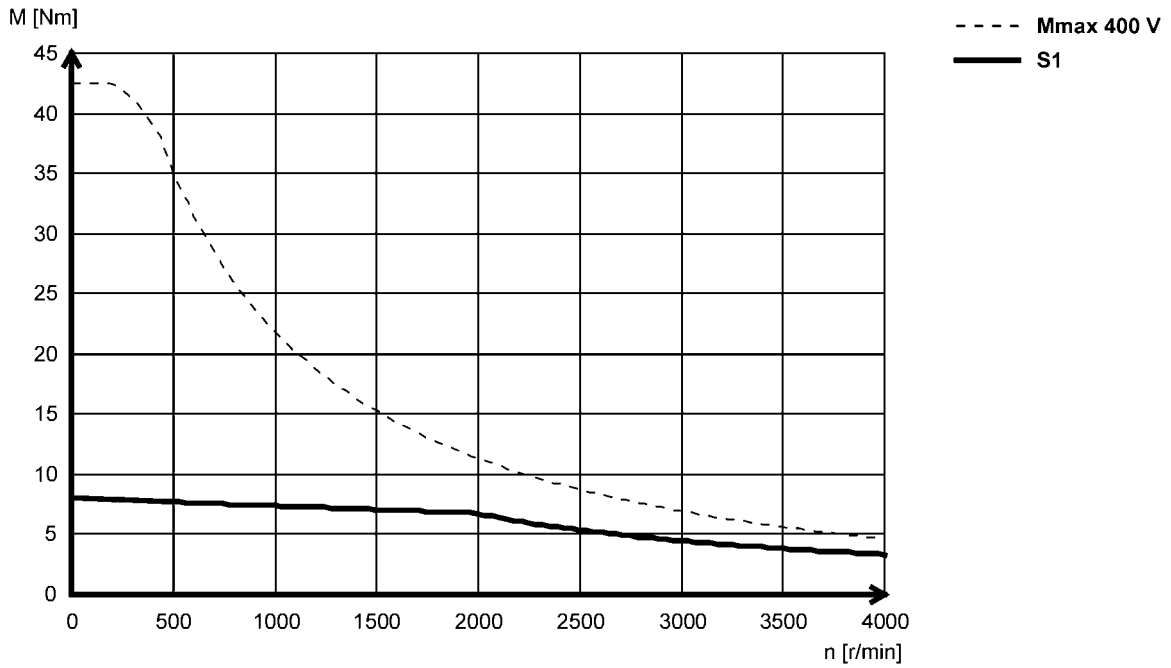



Torque characteristics

- The data applies to a mains connection voltage of 3 x 400 V.
- You can find further torque characteristics at **www.lenze.de/dsc**.

MCA14L35 (forced ventilated)

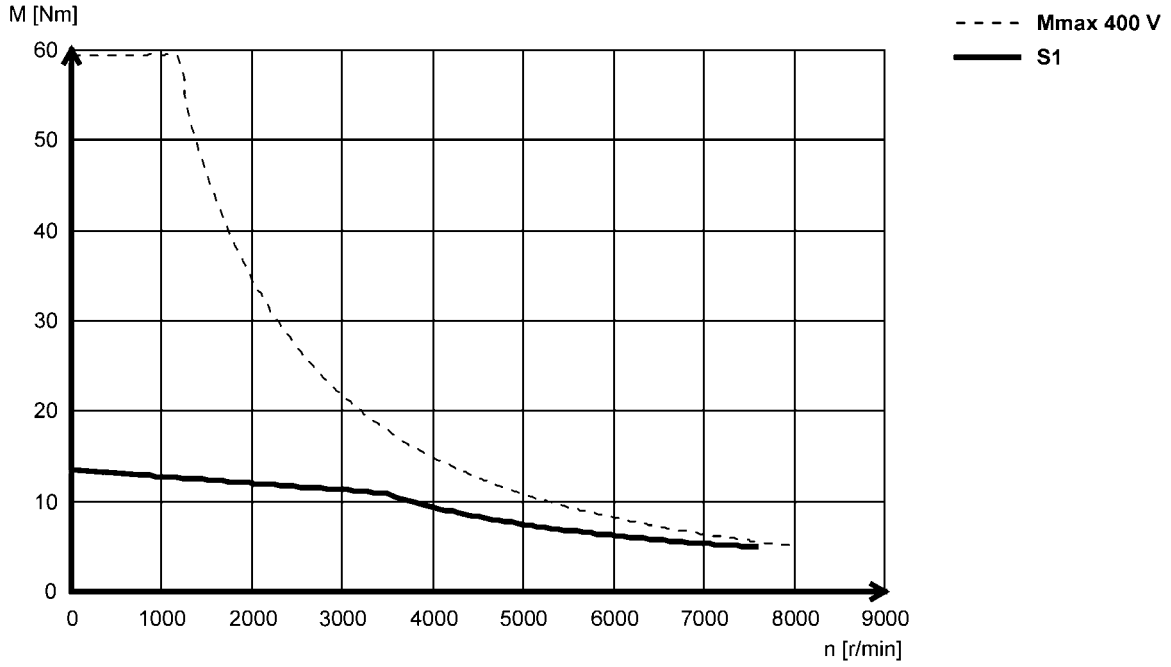

MCA14L41 (non-ventilated)

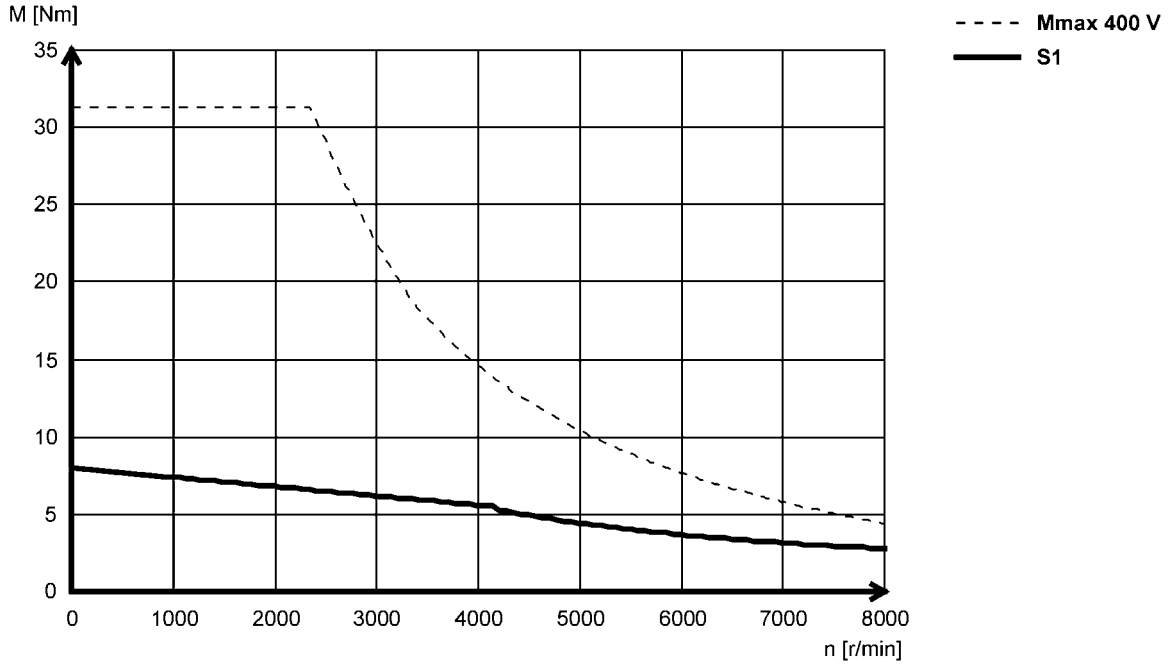



Torque characteristics

- The data applies to a mains connection voltage of 3 x 400 V.
- You can find further torque characteristics at **www.lenze.de/dsc**.

MCA17N17 (forced ventilated)

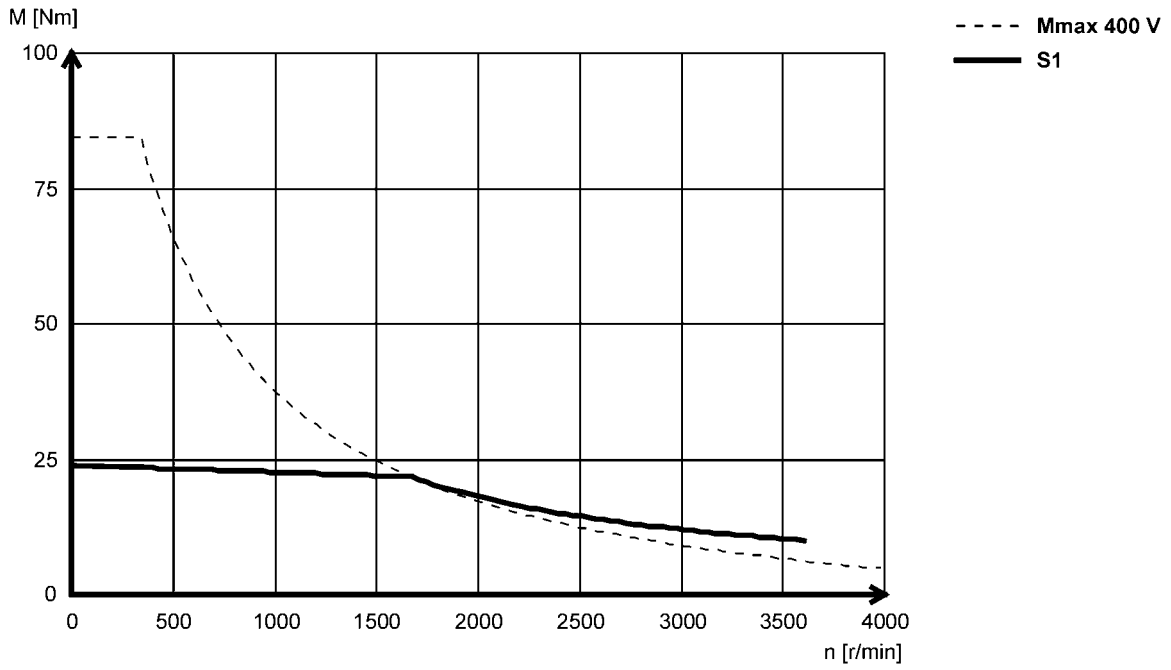

MCA17N23 (non-ventilated)

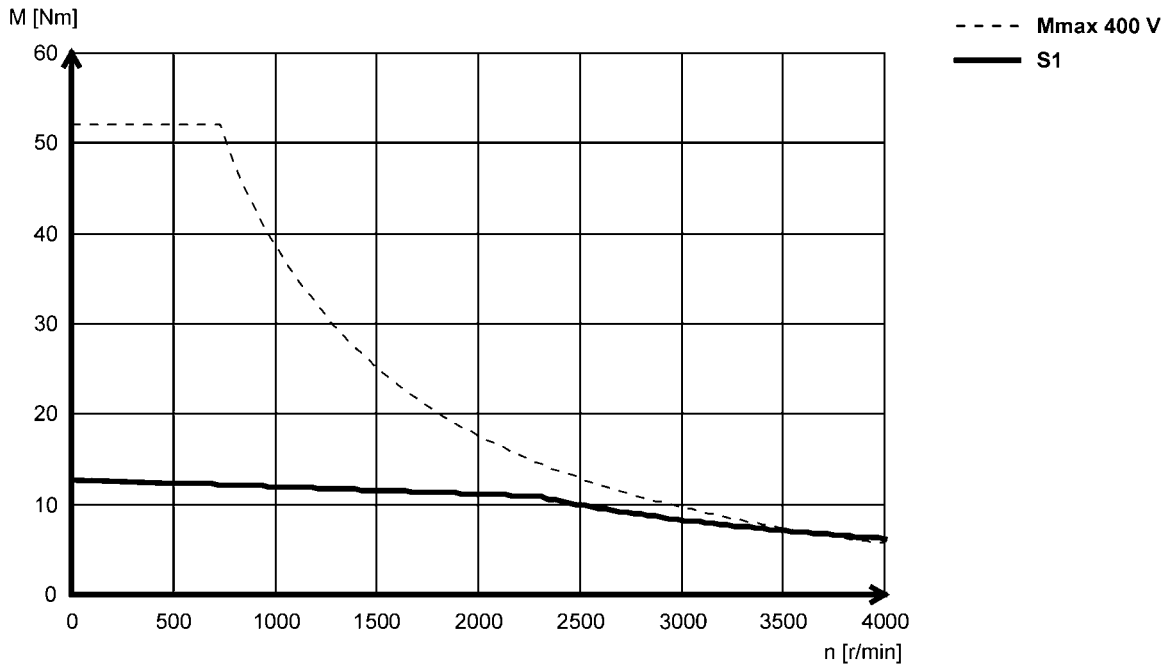



Torque characteristics

- The data applies to a mains connection voltage of 3 x 400 V.
- You can find further torque characteristics at **www.lenze.de/dsc**.

MCA17N35 (forced ventilated)

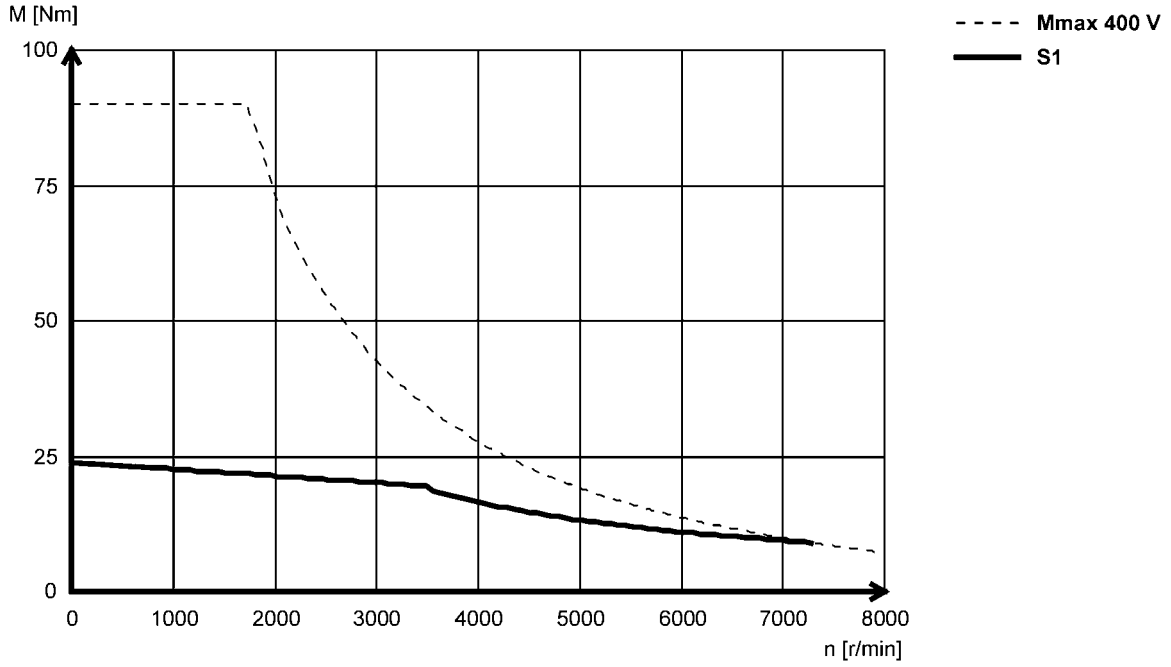

MCA17N41 (non-ventilated)

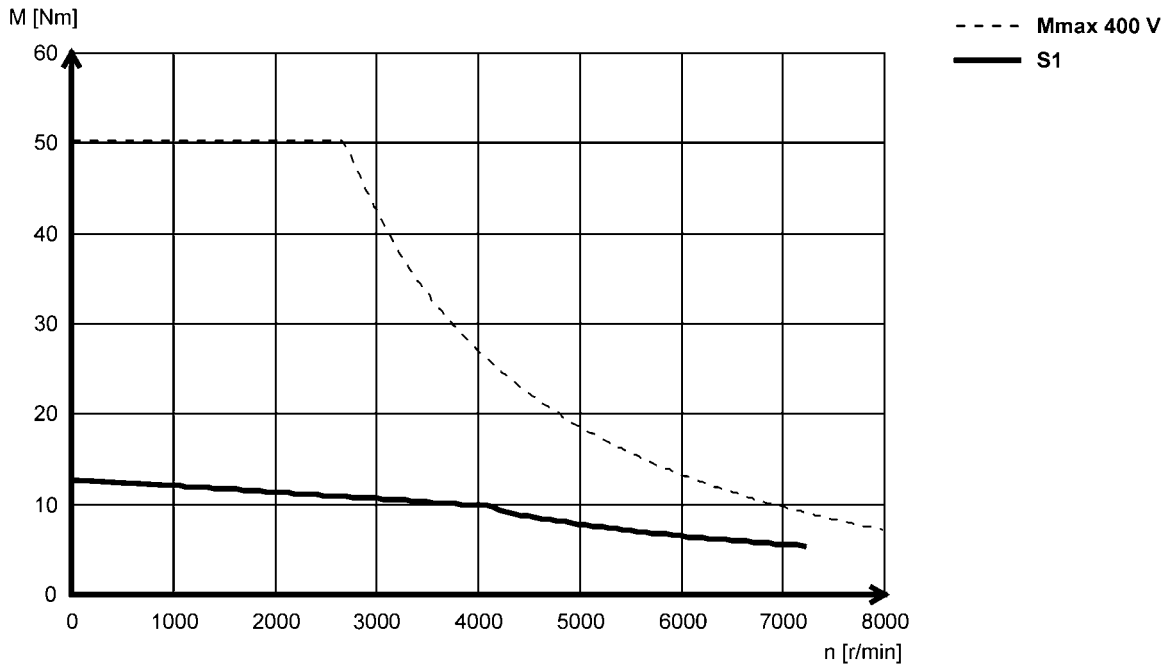



Torque characteristics

- The data applies to a mains connection voltage of 3 x 400 V.
- You can find further torque characteristics at **www.lenze.de/dsc**.

MCA19S17 (forced ventilated)

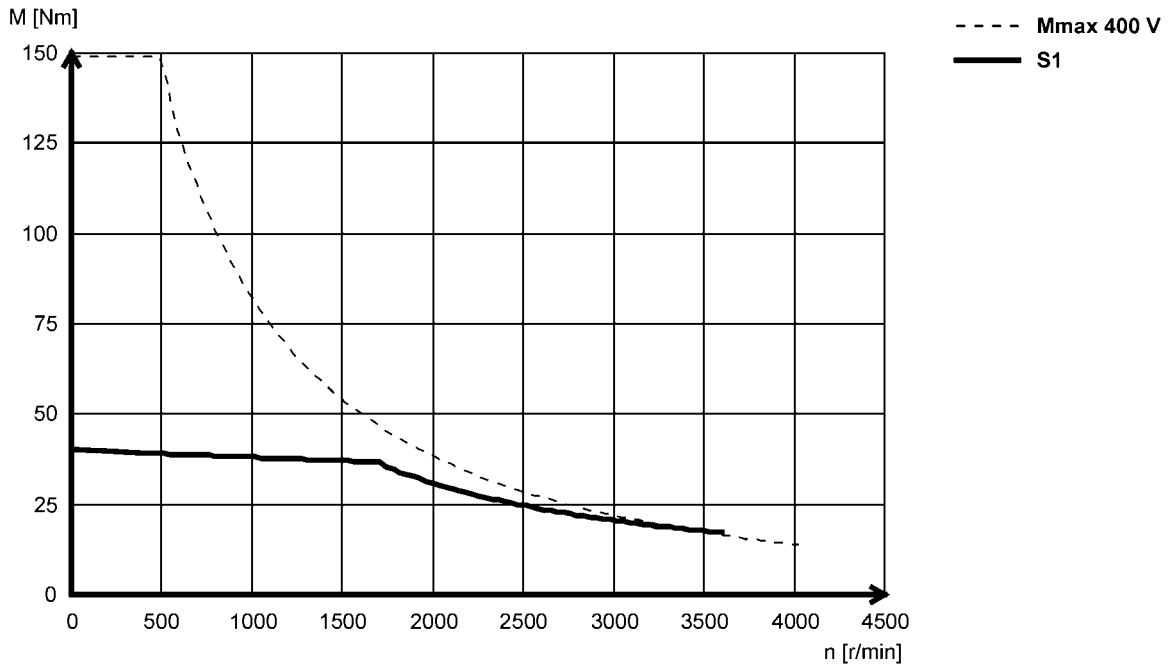

MCA19S23 (non-ventilated)

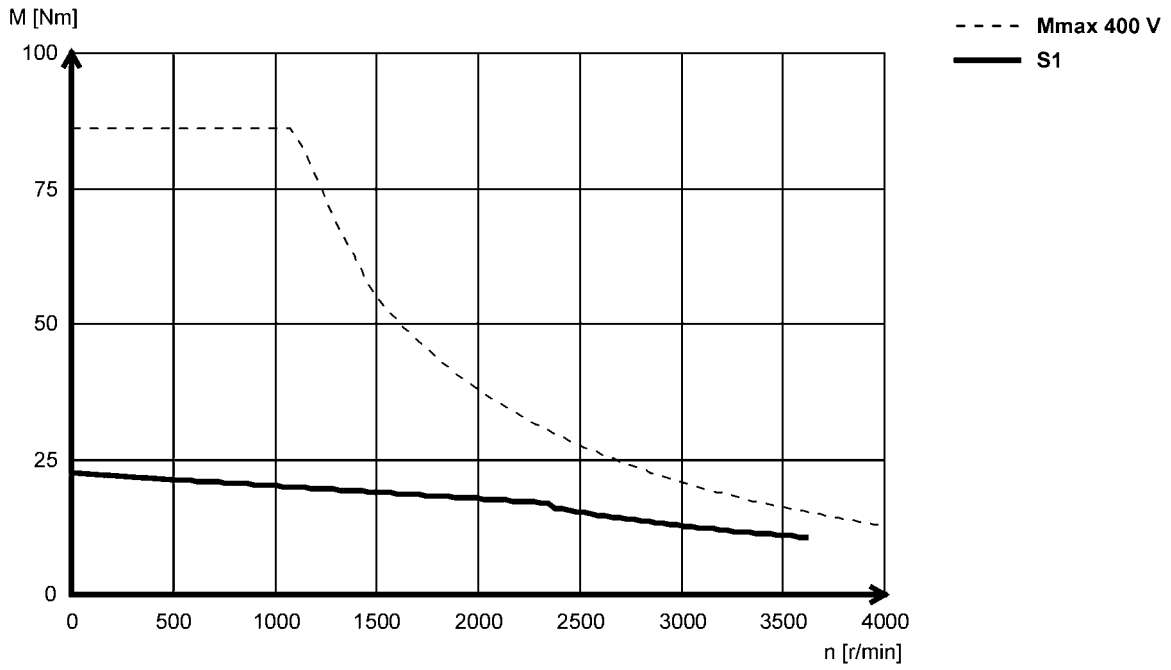



Torque characteristics

- The data applies to a mains connection voltage of 3 x 400 V.
- You can find further torque characteristics at **www.lenze.de/dsc**.

MCA19S35 (forced ventilated)

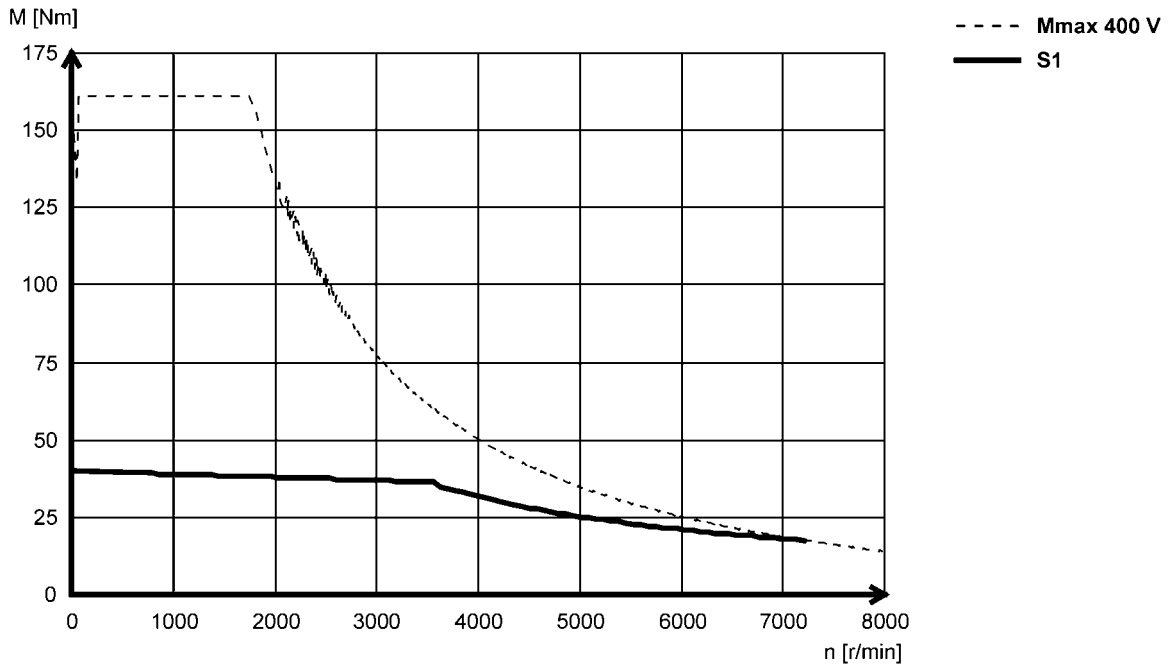

MCA19S42 (non-ventilated)

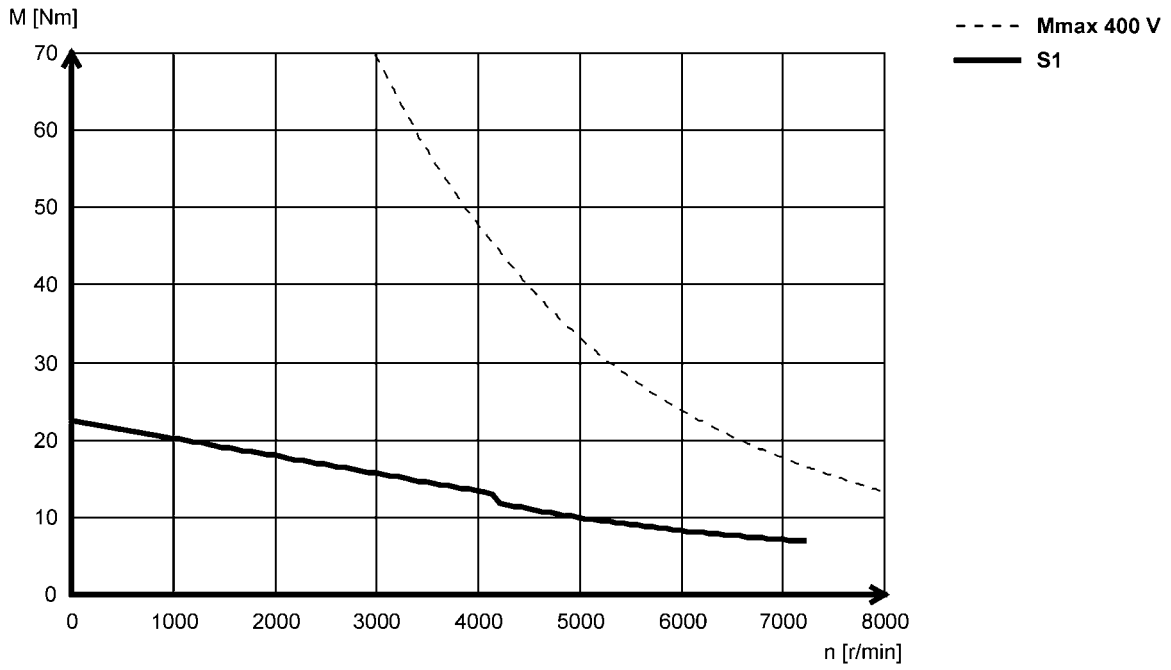



Torque characteristics

- The data applies to a mains connection voltage of 3 x 400 V.
- You can find further torque characteristics at **www.lenze.de/dsc**.

MCA20X14...2F□□ (forced ventilated)

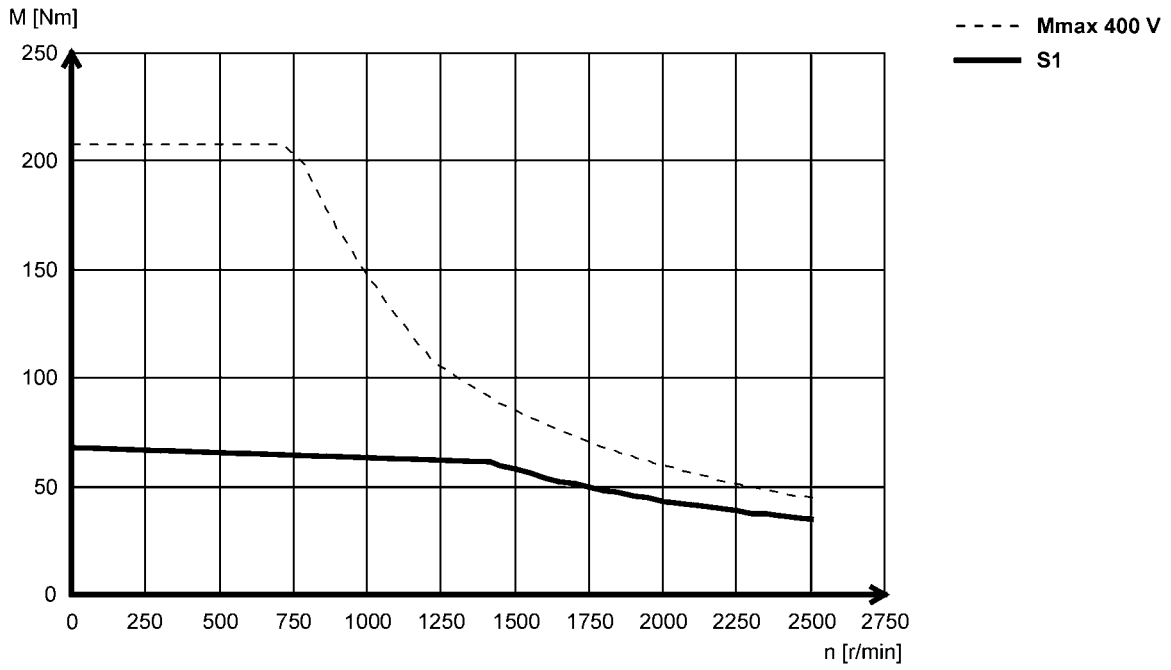

MCA20X29...2F□□ (forced ventilated)

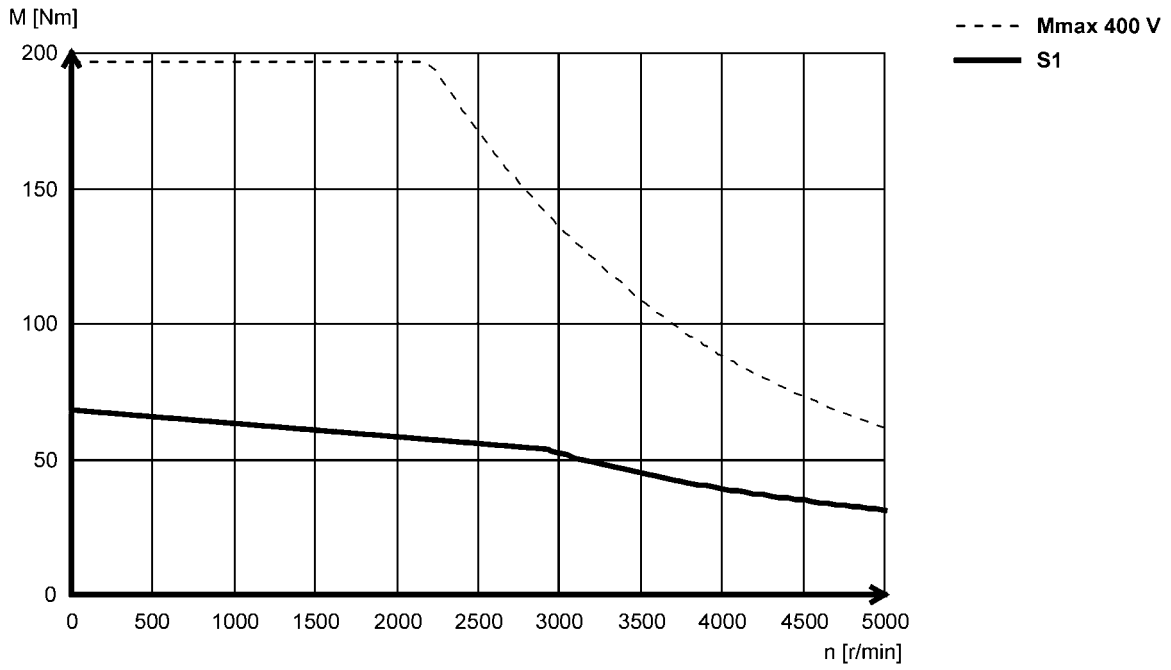



Torque characteristics

- The data applies to a mains connection voltage of 3 x 400 V.
- You can find further torque characteristics at **www.lenze.de/dsc**.

MCA21X17 (forced ventilated)

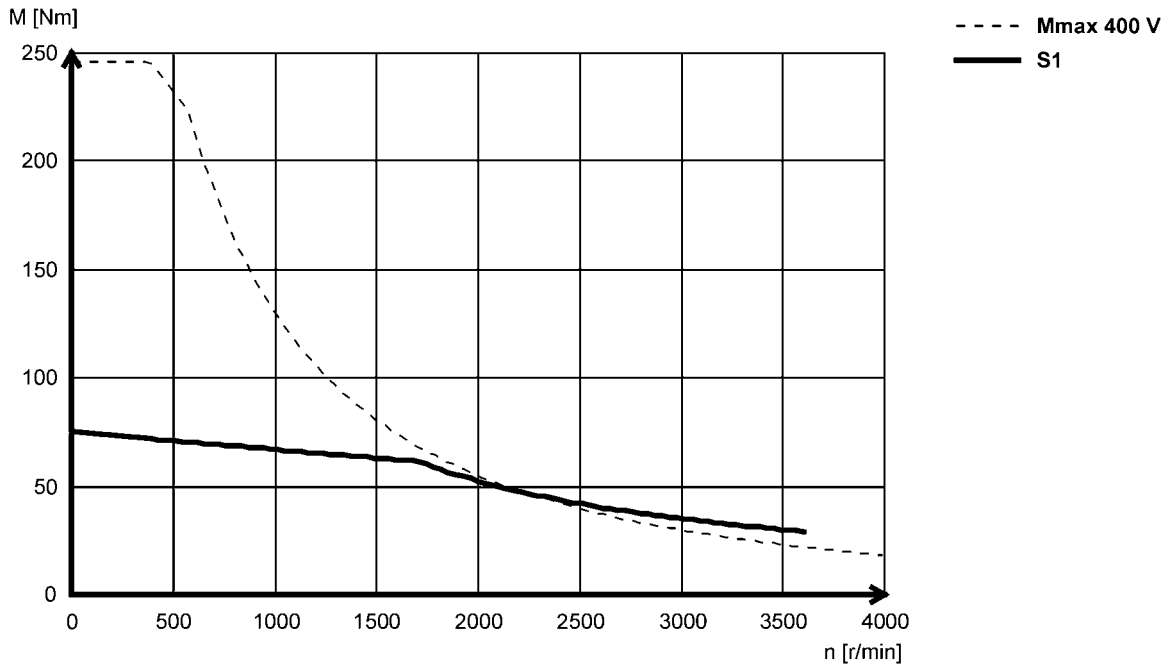

MCA21X25 (non-ventilated)

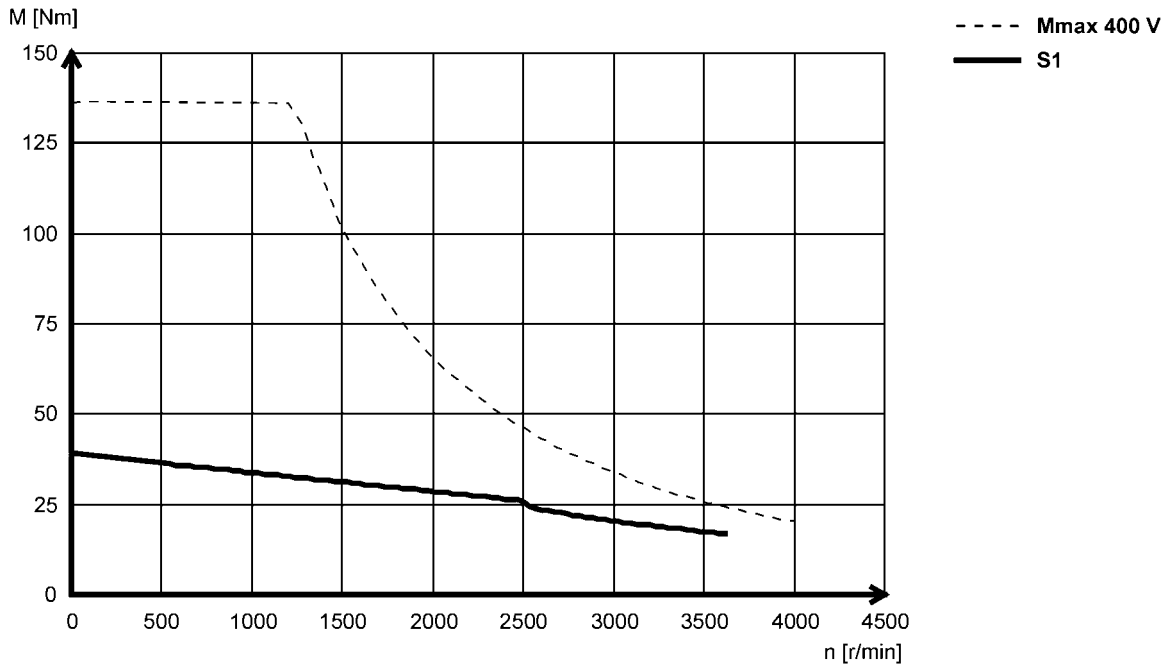



Torque characteristics

- The data applies to a mains connection voltage of 3 x 400 V.
- You can find further torque characteristics at **www.lenze.de/dsc**.

MCA21X35 (forced ventilated)

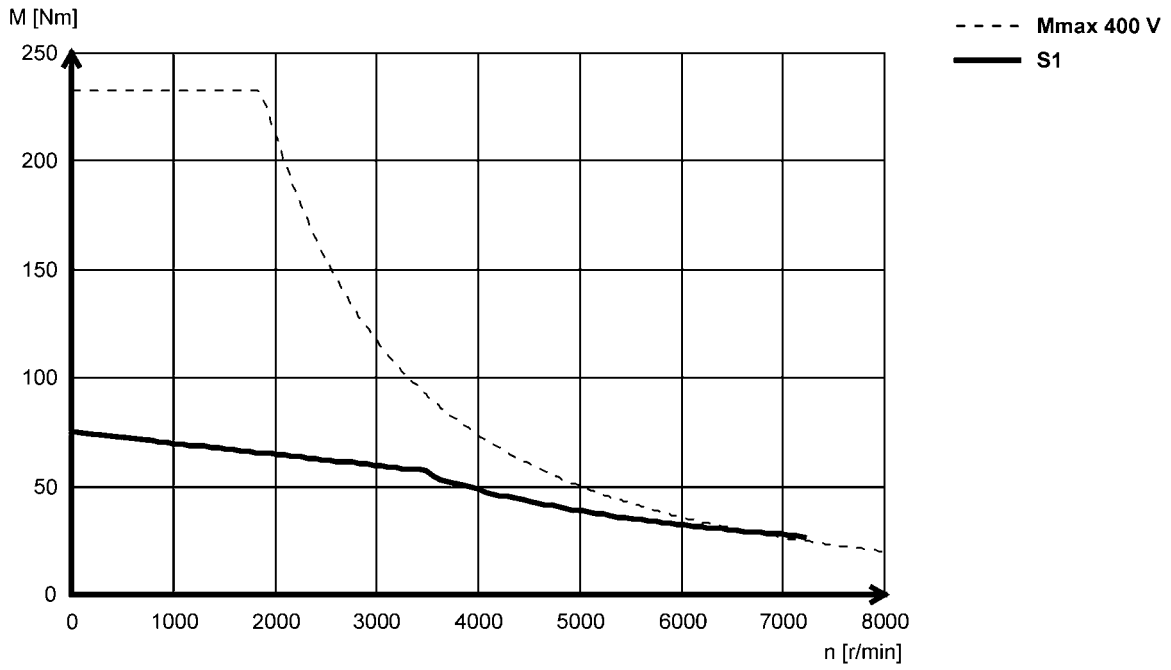

MCA21X42 (non-ventilated)

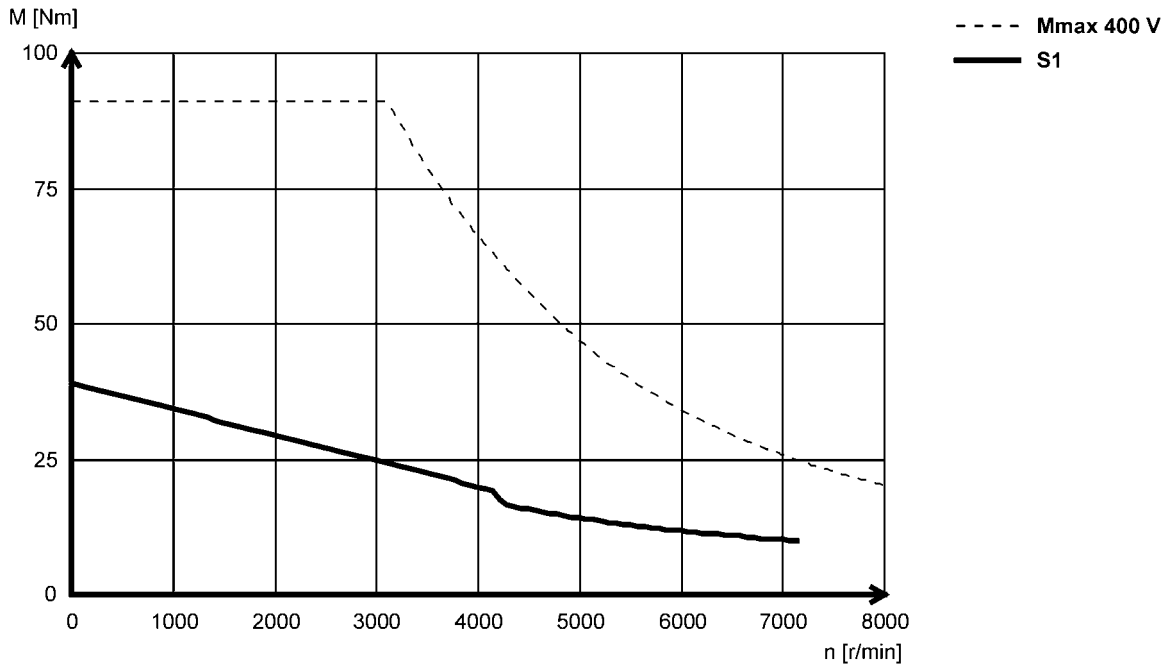



Torque characteristics

- The data applies to a mains connection voltage of 3 x 400 V.
- You can find further torque characteristics at **www.lenze.de/dsc**.

MCA22P08...5F□□ (forced ventilated)

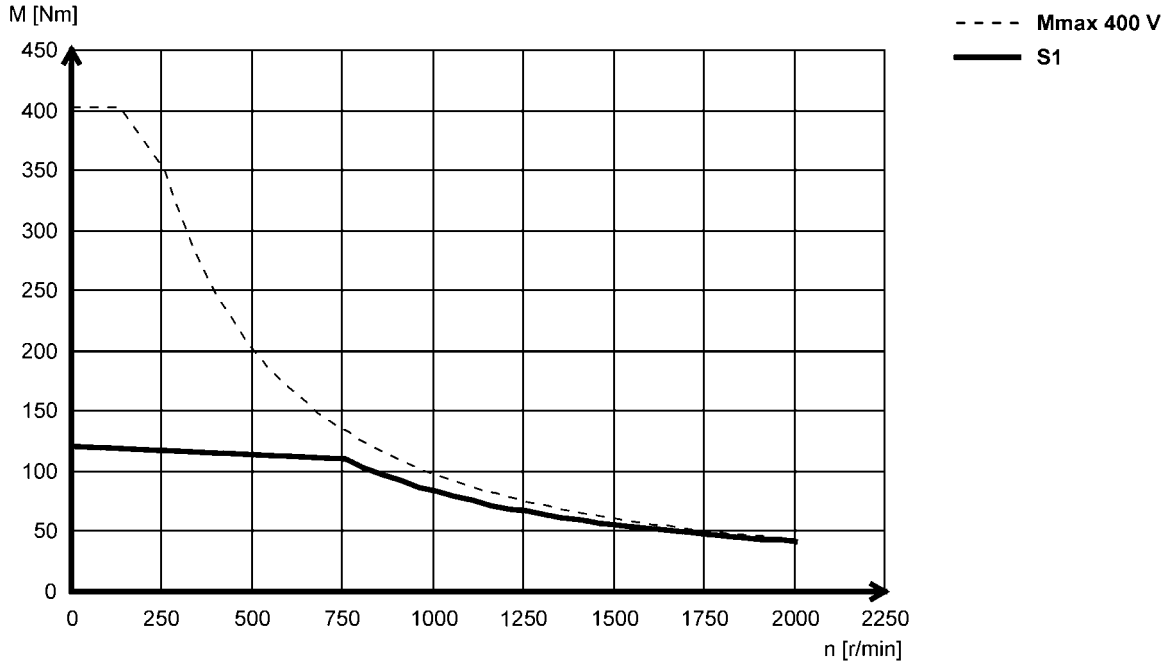

MCA22P08...2F□□ (forced ventilated)

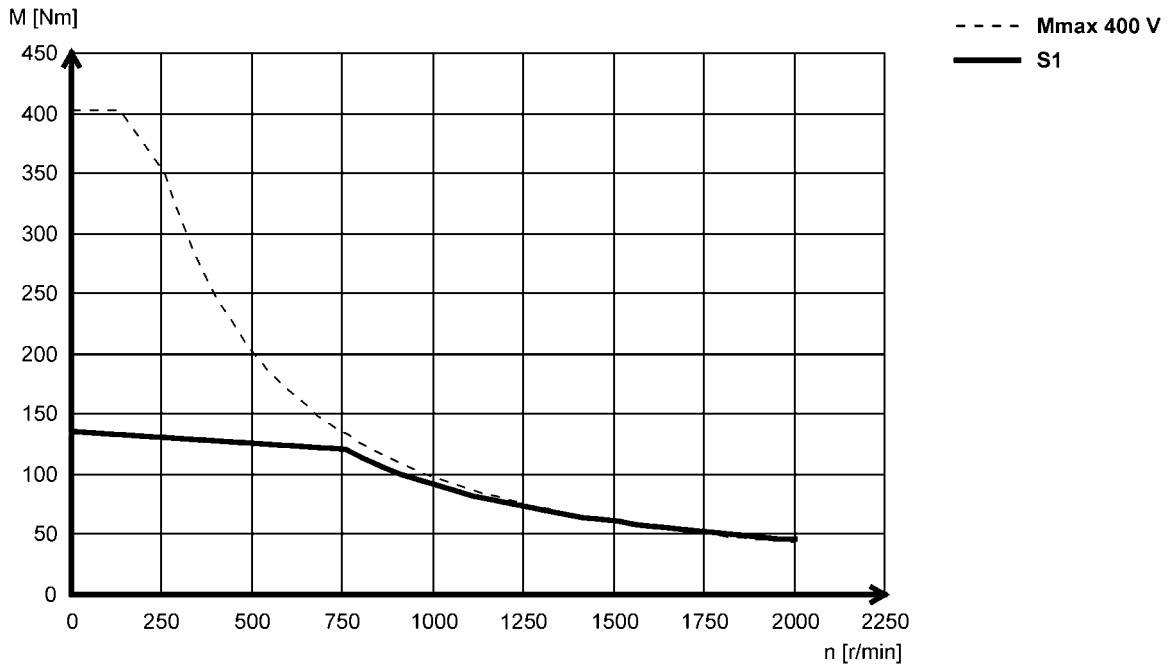



Torque characteristics

- The data applies to a mains connection voltage of 3 x 400 V.
- You can find further torque characteristics at **www.lenze.de/dsc**.

MCA22P14...5F□□ (forced ventilated)

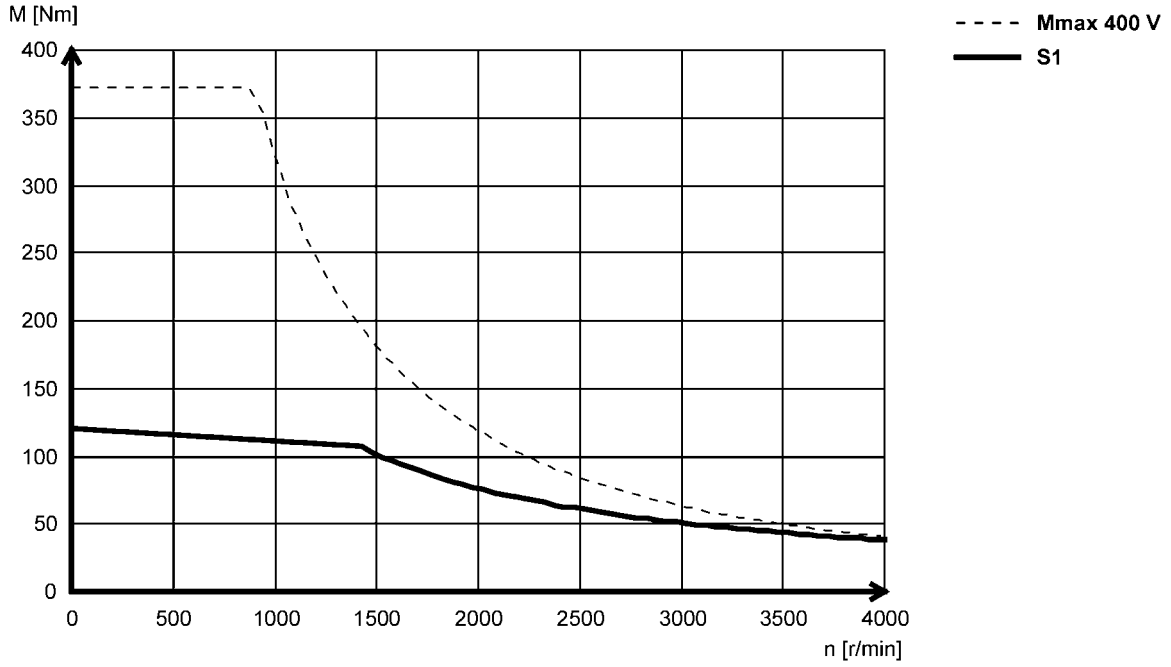

MCA22P14...2F□□ (forced ventilated)

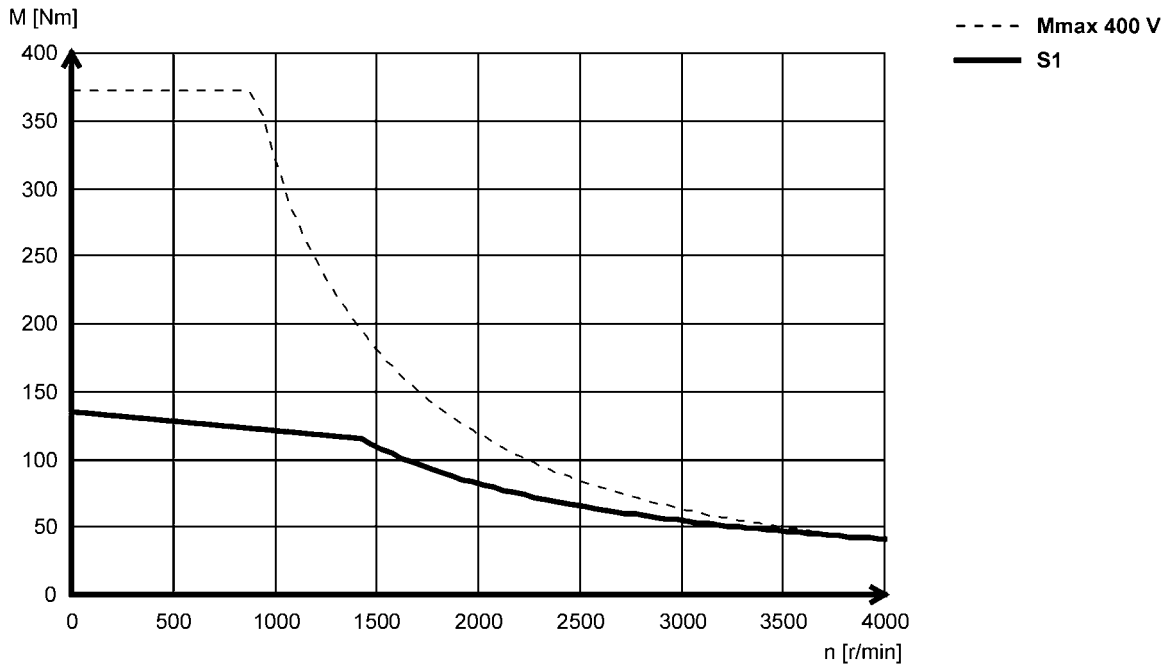



Torque characteristics

- The data applies to a mains connection voltage of 3 x 400 V.
- You can find further torque characteristics at **www.lenze.de/dsc**.

MCA22P17...5F□□ (forced ventilated)

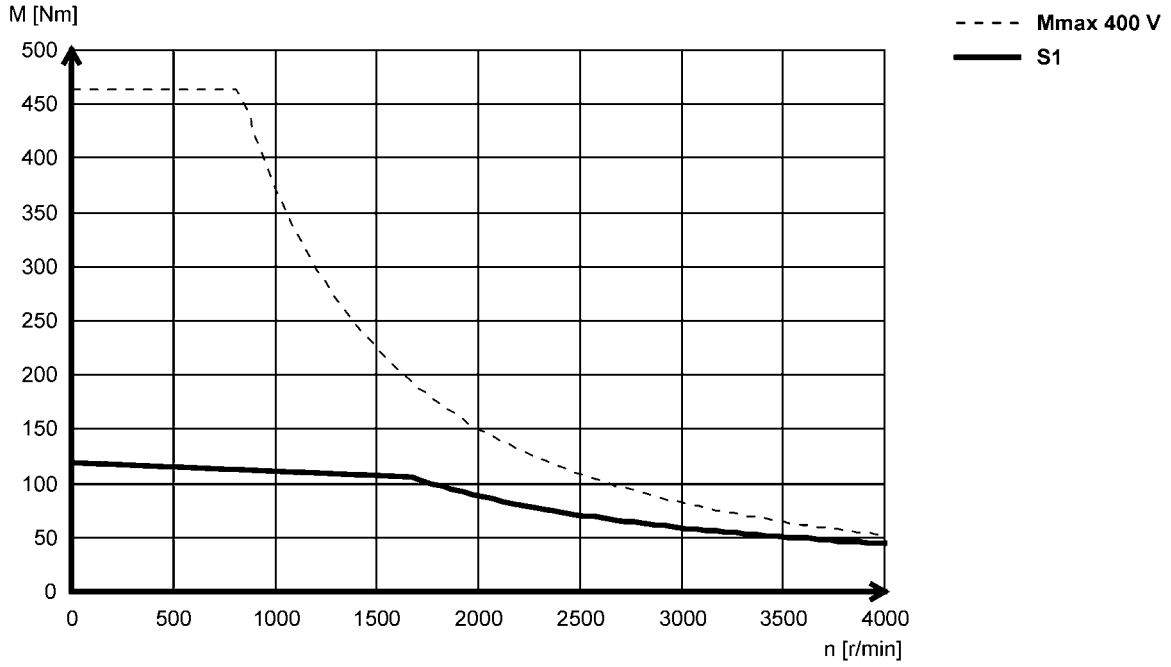

MCA22P17...2F□□ (forced ventilated)

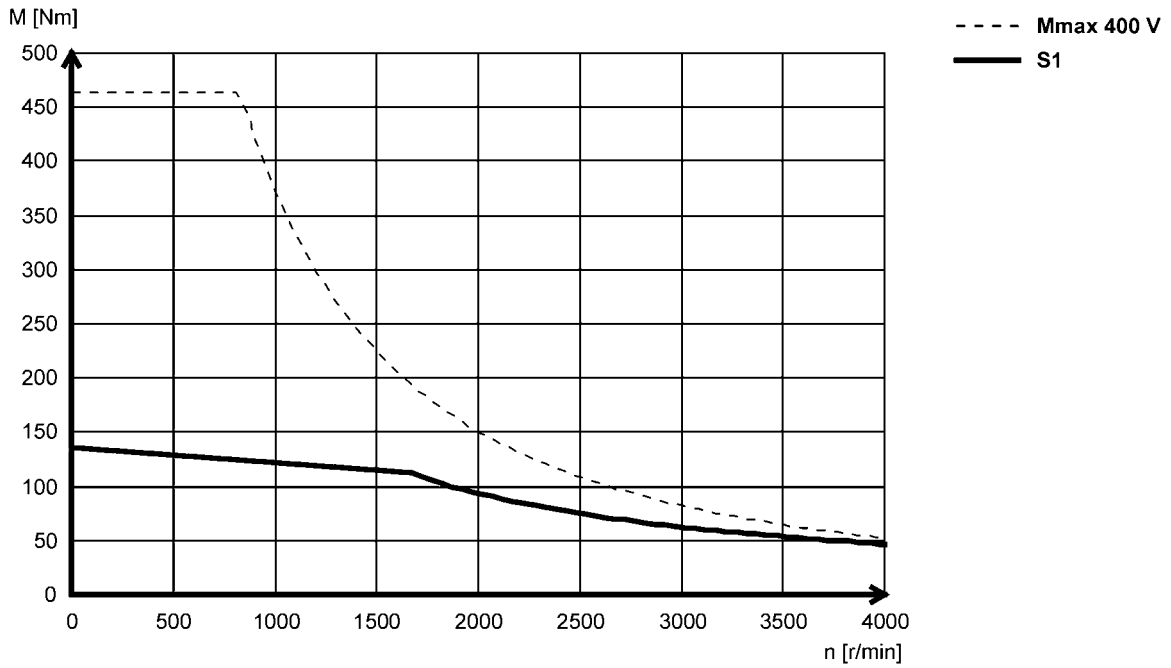



Torque characteristics

- The data applies to a mains connection voltage of 3 x 400 V.
- You can find further torque characteristics at **www.lenze.de/dsc**.

MCA22P29...5F□□ (forced ventilated)

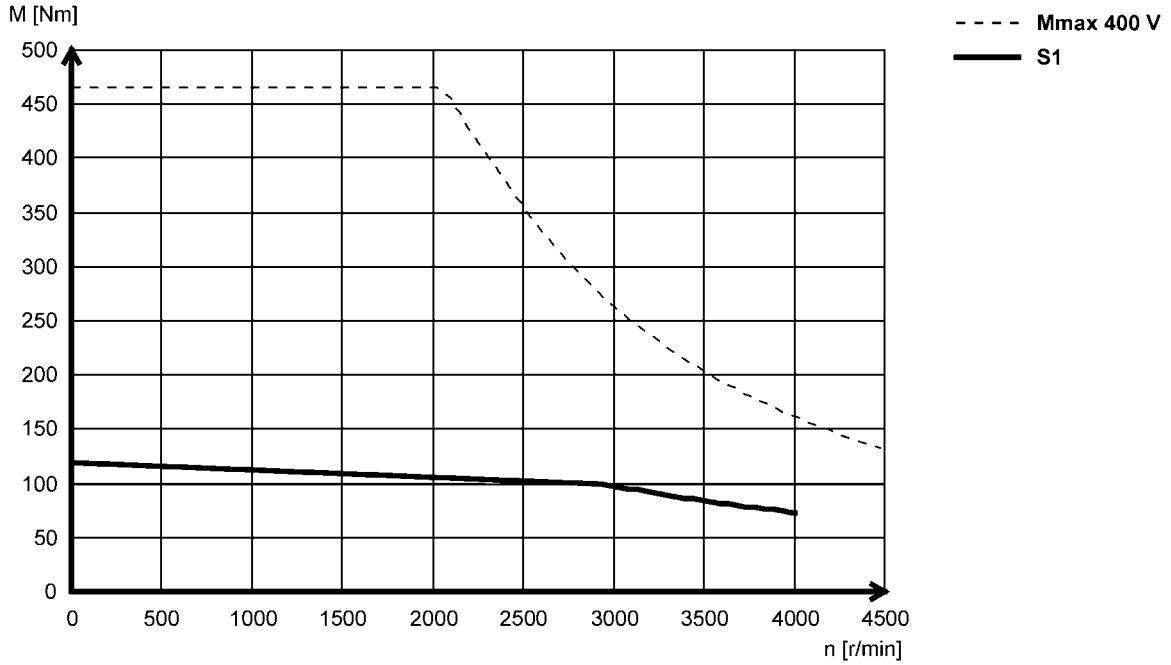

MCA22P29...2F□□ (forced ventilated)

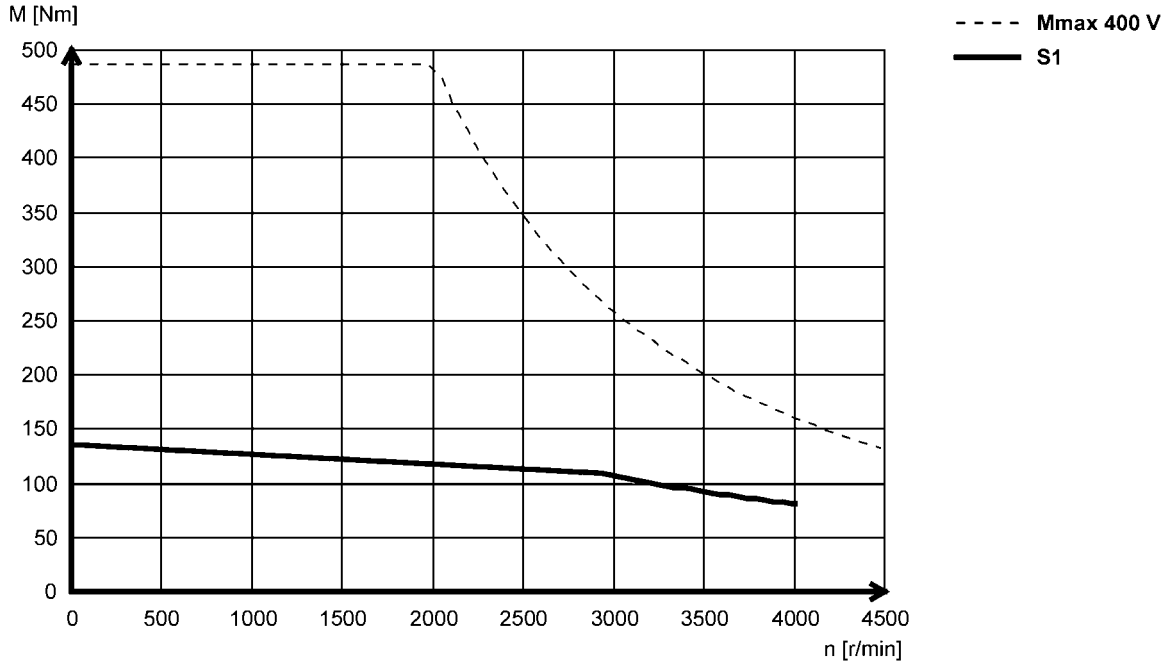



Torque characteristics

- The data applies to a mains connection voltage of 3 x 400 V.
- You can find further torque characteristics at **www.lenze.de/dsc**.

MCA26T05...5F□□ (forced ventilated)

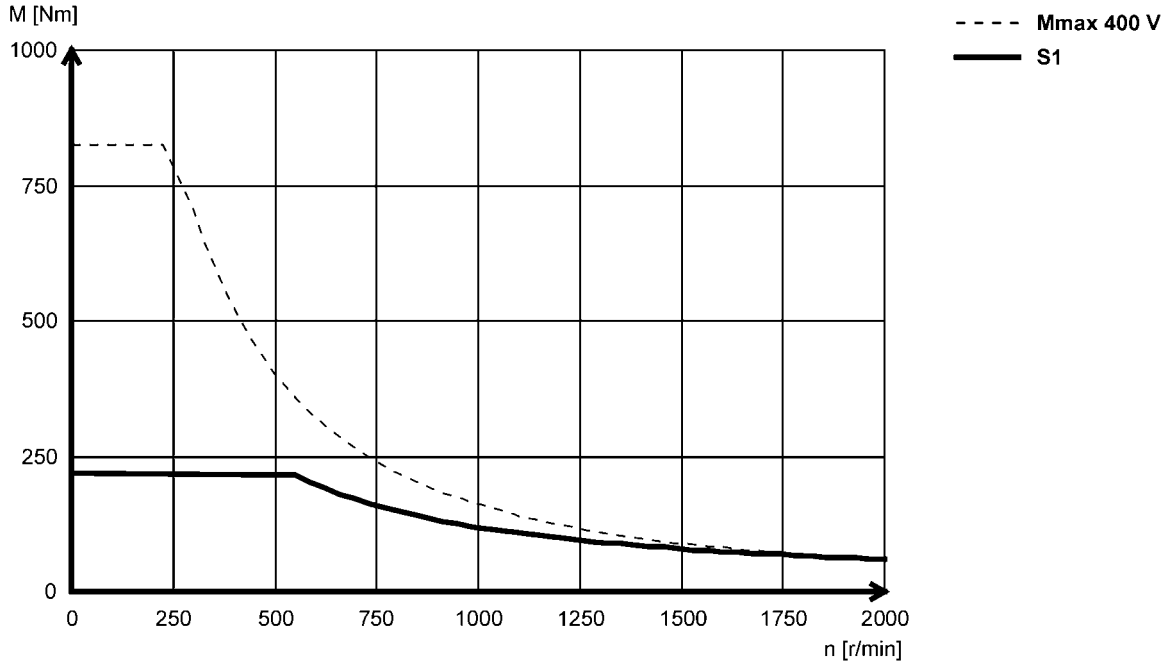

MCA26T05...2F□□ (forced ventilated)

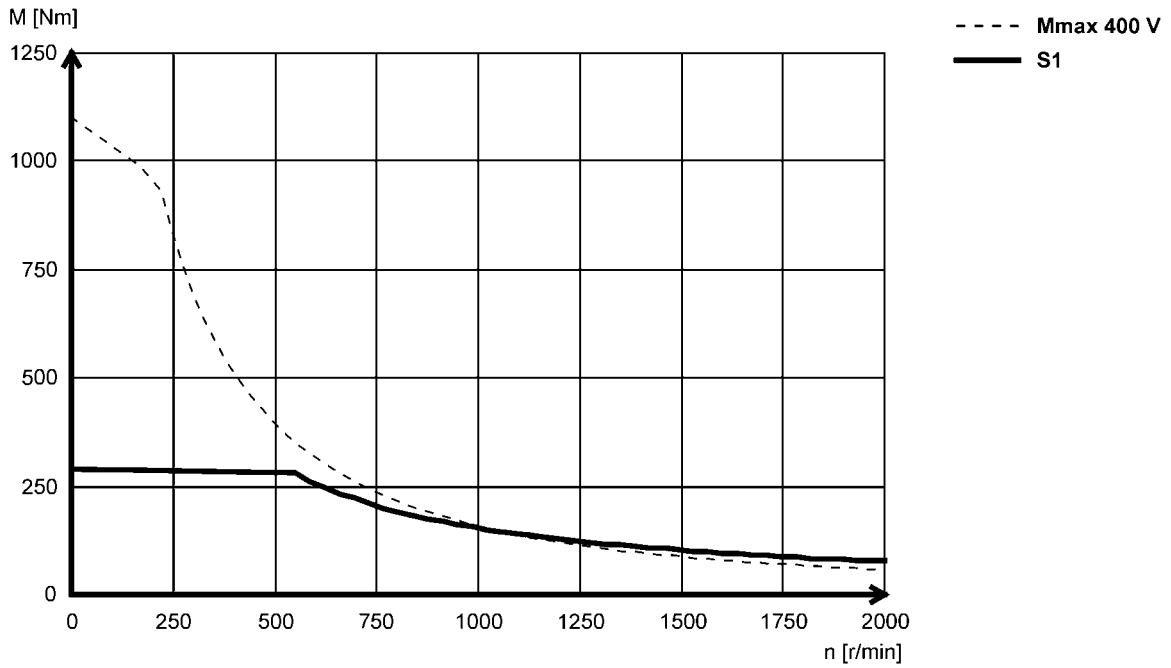



Torque characteristics

- The data applies to a mains connection voltage of 3 x 400 V.
- You can find further torque characteristics at **www.lenze.de/dsc**.

MCA26T10...5F□□ (forced ventilated)

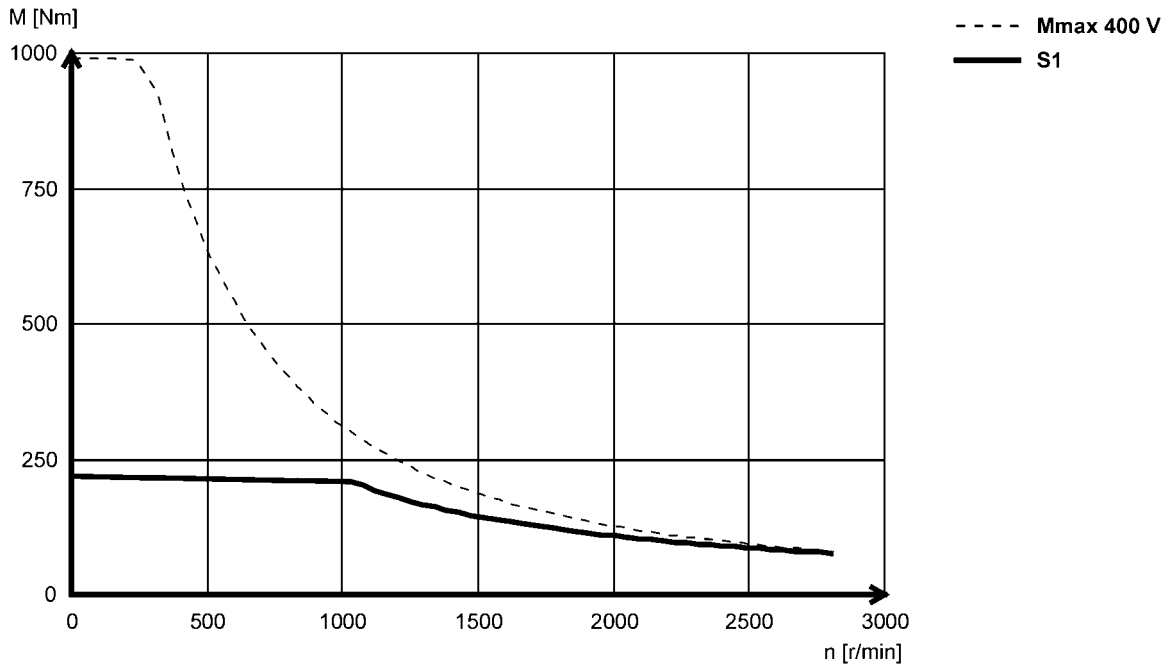

MCA26T10...2F□□ (forced ventilated)

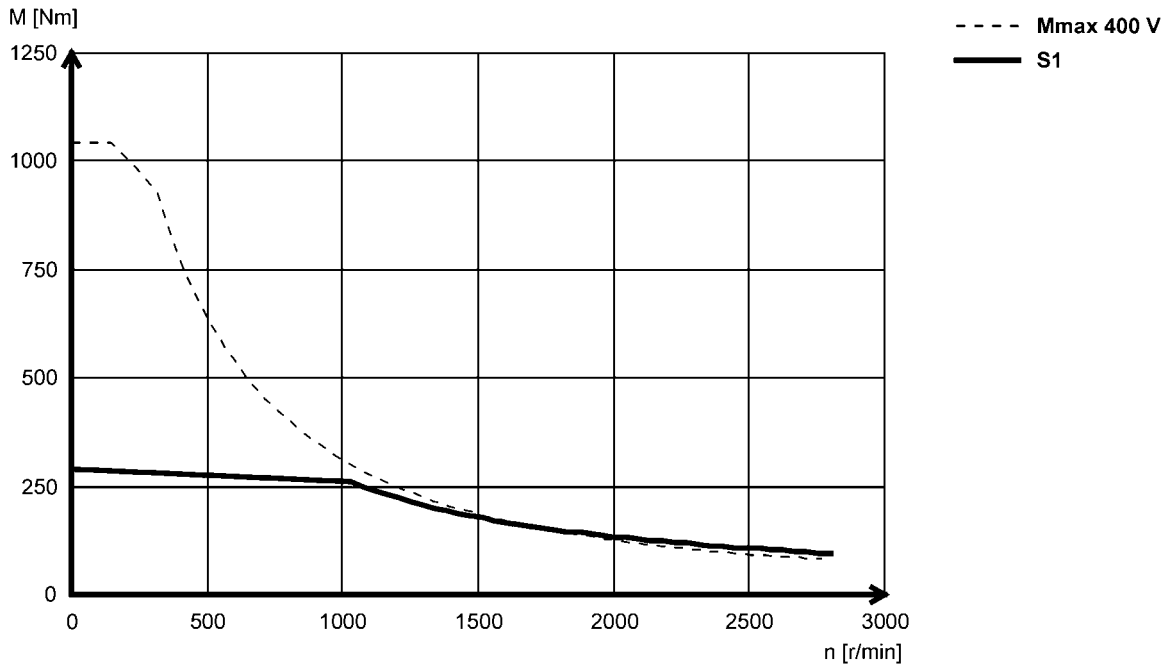



Torque characteristics

- The data applies to a mains connection voltage of 3 x 400 V.
- You can find further torque characteristics at **www.lenze.de/dsc**.

MCA26T12...5F□□ (forced ventilated)

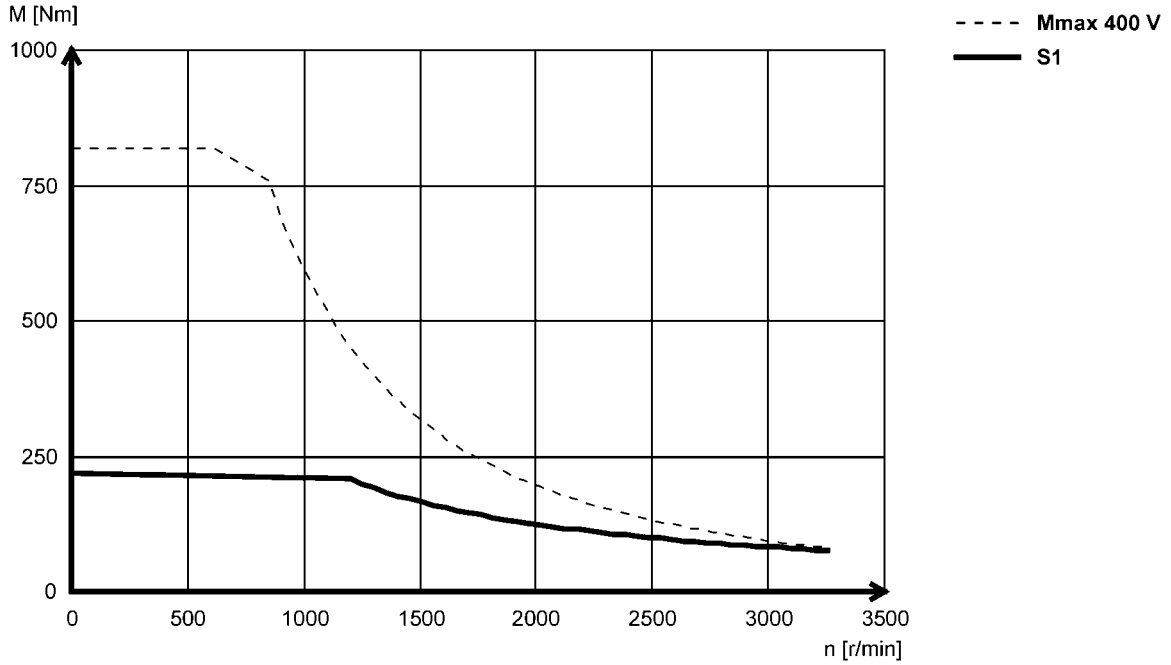

MCA26T12...2F□□ (forced ventilated)

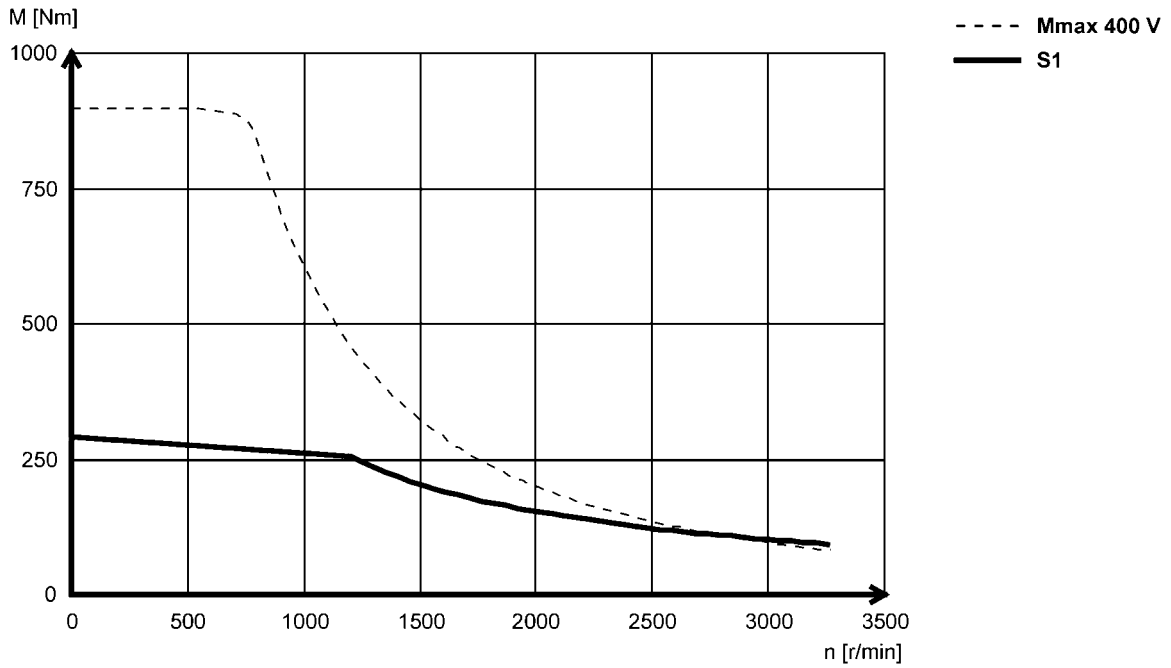



Torque characteristics

- The data applies to a mains connection voltage of 3 x 400 V.
- You can find further torque characteristics at **www.lenze.de/dsc**.

MCA26T22...5F□□ (forced ventilated)

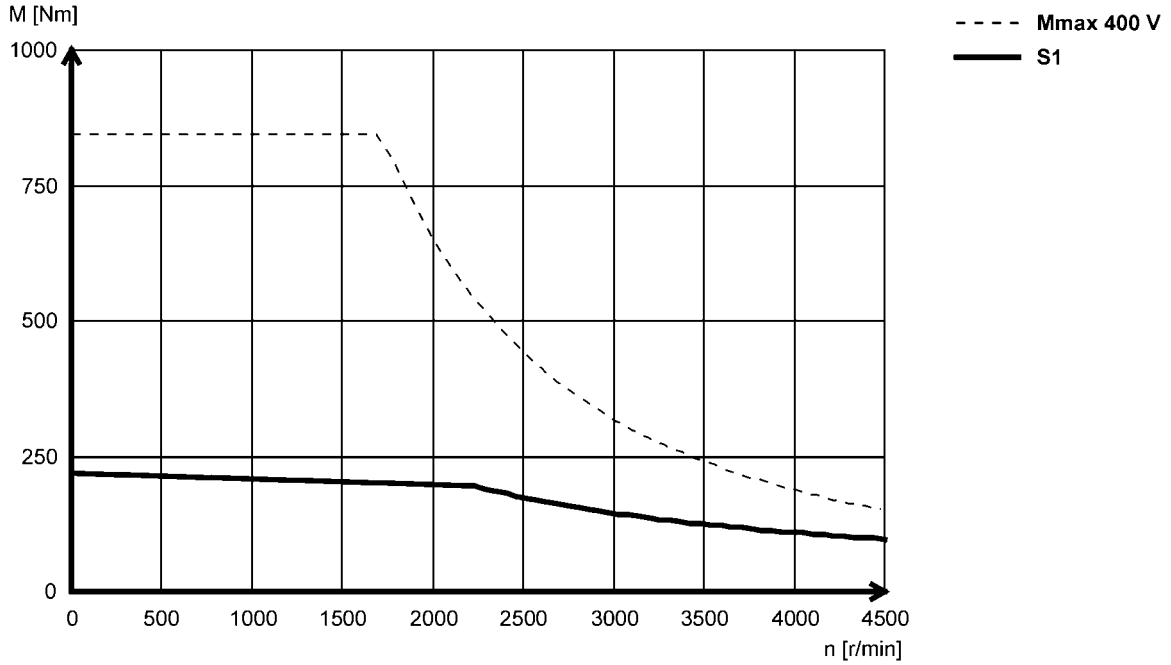

MCA26T22...2F□□ (forced ventilated)

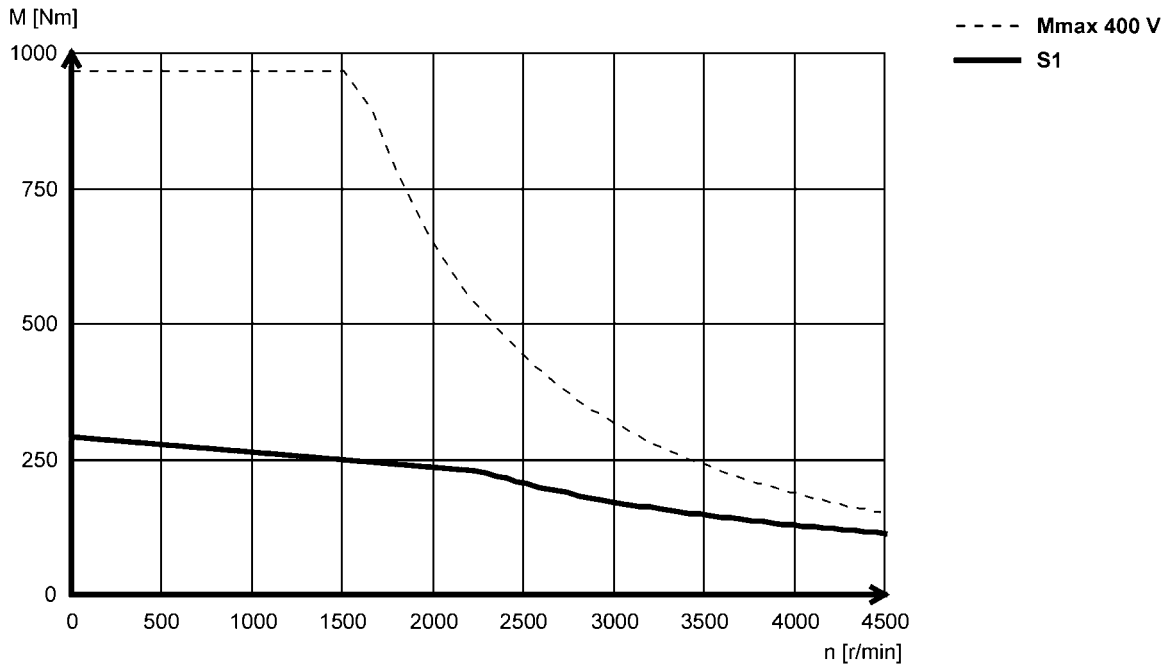



Dimensions, self-ventilated

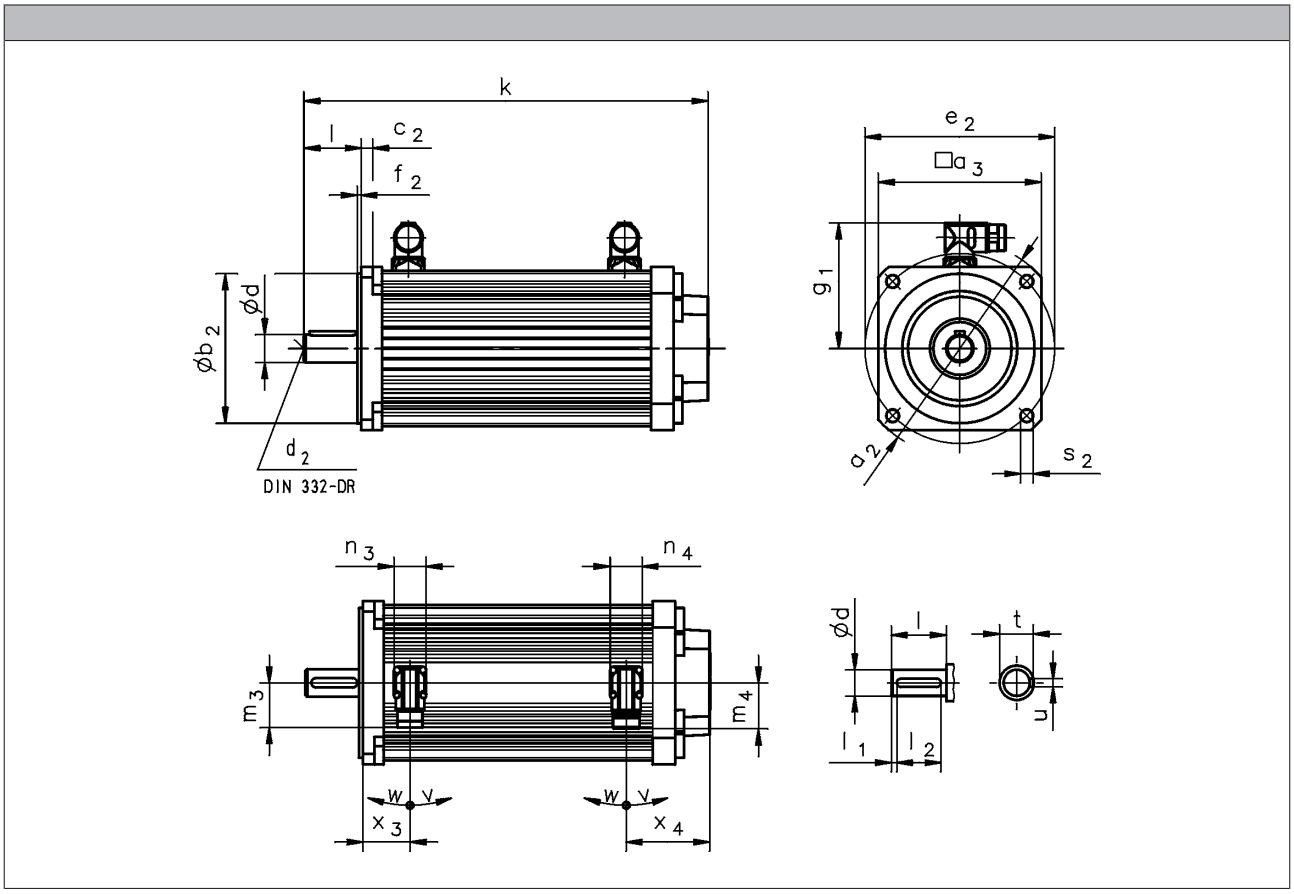

			MCA10I40	MCA13I41	MCA14L20	MCA17N23	MCA19S23	MCA21X25
					MCA14L41	MCA17N41	MCA19S42	MCA21X42
R□0 B0	k	[mm]	292	311	352	390	461	550
	x_3	[mm]	37	45	41	43	56	62
	x_4	[mm]	61	65	73			78
R□0 P□	k	[mm]	317	346	385	425	499	592
	x_3	[mm]	59	72	68	75	91	102
	x_4	[mm]	61	65	73			78
S□□ / E□□ / T20 / B0	k	[mm]	346	365	407	444	511	599
	x_3	[mm]	37	45	41	43	56	62
	x_4	[mm]	115	119	128	127	123	127
S□□ / E□□ / T20 / P□	k	[mm]	371	400	440	479	549	641
	x_3	[mm]	59	72	68	75	91	102
	x_4	[mm]	115	119	128	127	123	127

► Speed/angle sensor: RS0 / S□□ / E□□ / T20
► Brake: B0 / P□



Dimensions, self-ventilated

	g_1	n_3	n_4	m_3	m_4	v	w
	[mm]	[mm]	[mm]	[mm]	[mm]	[°]	[°]
MCA10I40	90	28	28	40	40	195	80
MCA13I41	102						
MCA14L20	109						
MCA14L41							
MCA17N23	118						
MCA17N41							
MCA19S23	151	40		71			
MCA19S42							
MCA21X25	162						
MCA21X42							

	d	d_2	l	l_1	l_2	u	t
	k6						
	[mm]	[mm]	[mm]	[mm]	[mm]	[mm]	[mm]
MCA10	14	M5	30	2.5	25	5.0	16.0
MCA13	19	M6	40	2.0	36	6.0	21.5
MCA14	24	M8	50	5.0	40	8.0	27.0
MCA17							
MCA19	28	M10	60		50		31.0
MCA21	38	M12	80		70	10.0	41.0

	a_2	a_3	b_2	c_2	e_2	f_2	s_2
			j6				
	[mm]	[mm]	[mm]	[mm]	[mm]	[mm]	[mm]
MCA10	120	102	80	8	100	3.0	7
			70		85	2.5	M6
MCA13	160	130	110	9	130	3.5	9.0
							M8
MCA14	188	142	130	10	165		11.0
			110		130		M8
MCA17	200	165	130	12	165		11.0
			110		130		M8
MCA19	250	192	180	11	215	4.0	13.0
			110		130	3.5	M8
MCA21		214	180		215	4.0	13.0
	300	250	230	12	265		
	250	214	110	11	130	3.5	M8



Dimensions, forced ventilated

Motors MCA13 to 19/21

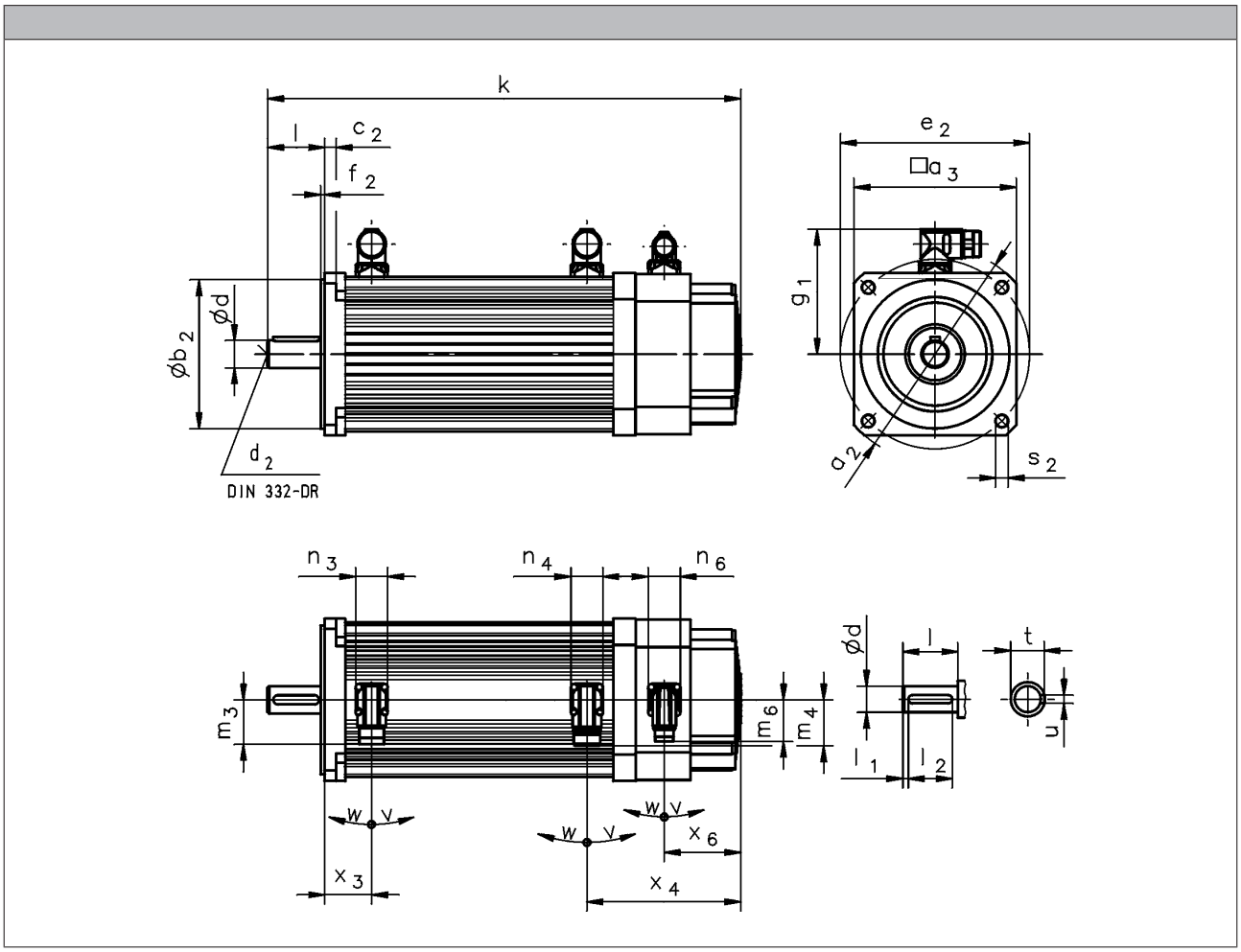

			MCA13I34	MCA14L16	MCA17N17	MCA19S17	MCA21X17
				MCA14L35	MCA17N35	MCA19S35	MCA21X35
R□0 B0	k	[mm]	379	414	476	558	646
	x_3	[mm]	45	41	43	56	62
	x_4	[mm]	133	135	159	170	174
R□0 P□	k	[mm]	414	447	511	596	688
	x_3	[mm]	72	68	75	91	102
	x_4	[mm]	133	135	159	170	174
S□□ / E□□ / T20 / B0	k	[mm]	433	469	530	608	695
	x_3	[mm]	45	41	43	56	62
	x_4	[mm]	187	190	213	220	223
S□□ / E□□ / T20 / P□	k	[mm]	468	502	565	646	737
	x_3	[mm]	72	68	75	91	102
	x_4	[mm]	187	190	213	220	223
	x_6	[mm]	73	67	94	103	96

► Speed/angle sensor: RS0 / S□□ / E□□ / T20
► Brake: B0 / P□



Dimensions, forced ventilated

Motors MCA13 to 19/21

	g_1	n_3	n_4	n_6	m_3	m_4	m_6	v	w
	[mm]	[mm]	[mm]	[mm]	[mm]	[mm]	[mm]	[°]	[°]
MCA13I34	102	28	28	28	40	40	37	195	80
MCA14L16	109								
MCA14L35									
MCA17N17	118								
MCA17N35									
MCA19S17	151	40			71				
MCA19S35									
MCA21X17	162								
MCA21X35									

	d	d_2	l	l_1	l_2	u	t
	k6						
	[mm]	[mm]	[mm]	[mm]	[mm]	[mm]	[mm]
MCA13	19	M6	40	2.0	36	6.0	21.5
MCA14	24	M8	50	5.0	40	8.0	27.0
MCA17							
MCA19	28	M10	60		50		31.0
MCA21	38	M12	80		70	10.0	41.0

	a_2	a_3	b_2	c_2	e_2	f_2	s_2
			j6				
	[mm]	[mm]	[mm]	[mm]	[mm]	[mm]	[mm]
MCA13	160	130	110	9	130	3.5	9.0
							M8
MCA14	188	142	130	10	165		11.0
			110		130		M8
MCA17	200	165	130	12	165		11.0
			110		130		M8
MCA19	250	192	180	11	215	4.0	13.0
			110		130	3.5	M8
MCA21		214	180		215	4.0	13.0
	300	250	230	12	265		
	250	214	110	11	130	3.5	M8



Dimensions, forced ventilated

MCA20/22/26 motors in B3 design

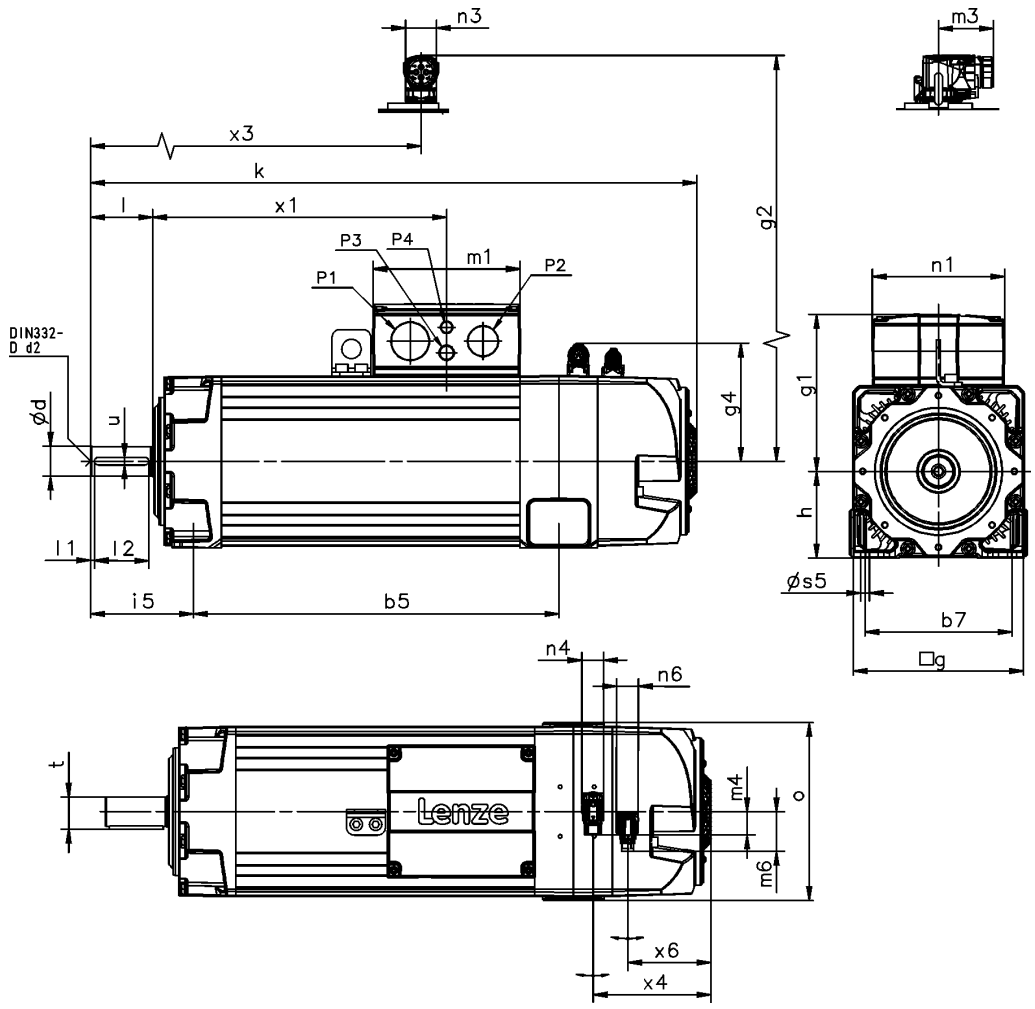

			MCA20	MCA22	MCA26
R□0 / E□□ / T□□ / S□□ / B0...F10	k	[mm]	666	783	970
R□0 / E□□ / T□□ / S□□ / B0...F1F	k	[mm]	754	865	1022
R□0 / E□□ / T□□ / S□□ / B0	x_4	[mm]	146	153	194
	m_4	[mm]	25.0	31.0	25.0
R□0 F1...F10	k	[mm]	753	878	1125
R□0 F1...F1F	k	[mm]	842	959	1177
R□0 F1	x_4	[mm]	151	157	201
	m_4	[mm]		31.0	
E□□ / T□□ / S□□ / F1...F10	k	[mm]	797	916	1163
E□□ / T□□ / S□□ / F1...F1F	k	[mm]	885	998	1215
E□□ / T□□ / S□□ / F1	x_4	[mm]	146	162	200
	m_4	[mm]		31.0	
R□0 / E□□ / T□□ / S□□ / F2...F10	k	[mm]	822	948	1163
R□0 / E□□ / T□□ / S□□ / F2...F1F	k	[mm]	910	1030	1215
R□0 / E□□ / T□□ / S□□ / F2	x_4	[mm]	146	162	200
	m_4	[mm]		31.0	



Dimensions, forced ventilated

MCA20/22/26 motors in B3 design

	g	g_1	g_2	g_4	m_1	m_3	m_6	n_1	n_3	n_4	n_6
	[mm]	[mm]	[mm]	[mm]	[mm]	[mm]	[mm]	[mm]	[mm]	[mm]	[mm]
MCA20	200	171	168	141	154	72	51	128	40	28	28
MCA22	220	203		153	190			171			
MCA26	260	256		173	234			212			

	o	P_1	P_2	P_3	P_4	x_1	x_3	x_6
	[mm]	[mm]	[mm]	[mm]	[mm]	[mm]	[mm]	[mm]
MCA20	206	M32x1.5	M25x1.5	M20x1.5	M16x1.5	299	422	101
MCA22	230	M50x1.5	M40x1.5			380		108
MCA26	269	M63x1.5	M50x1.5			465		152

	d	d	d_2	l	l_1	l_2	u	t
	k6	m6		-0.7 ... 0.3				
	[mm]	[mm]	[mm]		[mm]	[mm]	[mm]	[mm]
MCA20	38		M12	80	5.0	70	10.0	41.0
MCA22								
MCA26		55	M20	110		100	16.0	59.0

	h	b_5	b_7	s_5	i_5
	[mm]	[mm]	[mm]	[mm]	[mm]
MCA20	100	366	160	11.5	134
MCA22	112	472	190		133
MCA26	132	581	215	14.0	165

- ► Speed/angle sensor: RS0 / S□□ / E□□ / T□□
- ► Brake: B0 / F1 / F2
- ► Blower: F10 / F1F



Dimensions, forced ventilated

MCA20/22/26 motors in B35 design

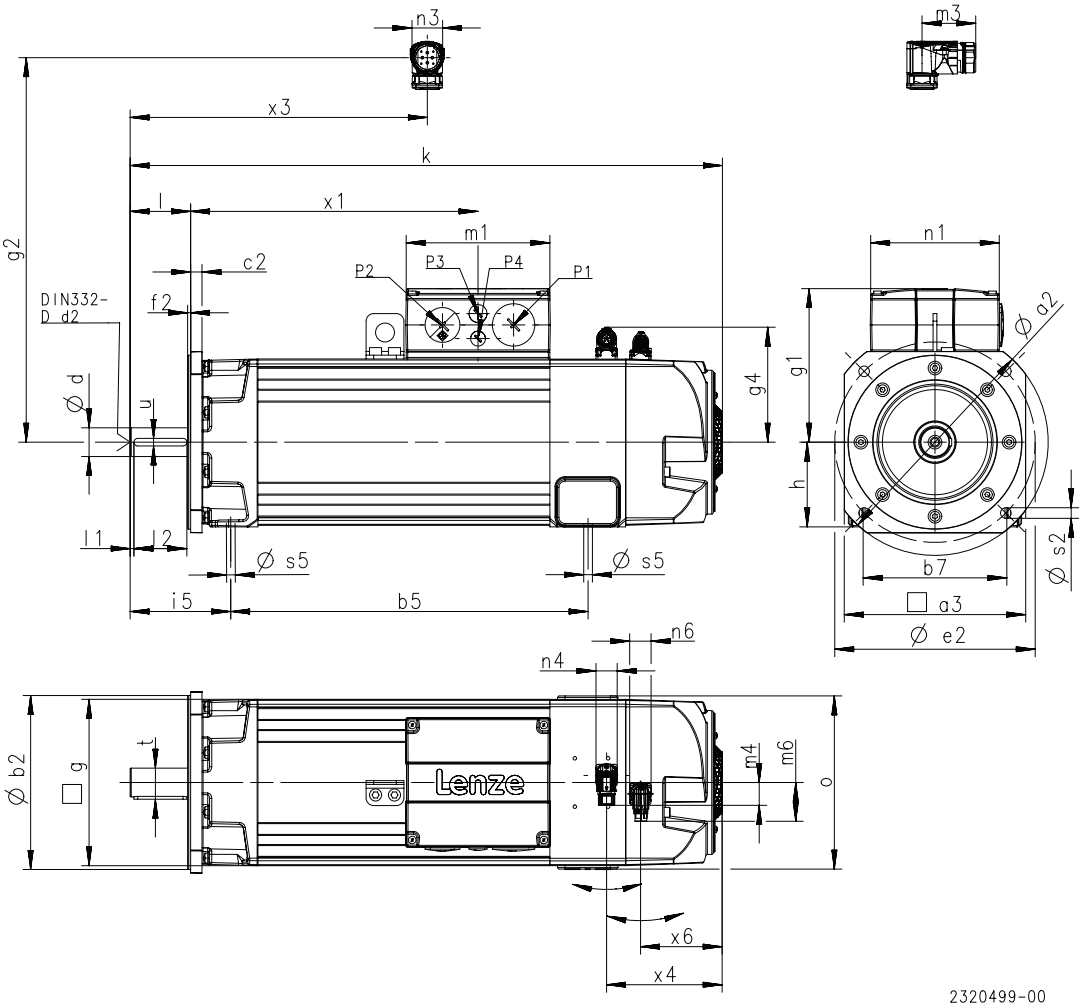

			MCA20	MCA22	MCA26
R□0 / E□□ / T□□ / S□□ / B0...F10	k	[mm]	666	783	970
R□0 / E□□ / T□□ / S□□ / B0...F1F	k	[mm]	754	865	1022
R□0 / E□□ / T□□ / S□□ / B0	x_4	[mm]	146	153	194
	m_4	[mm]	25.0	31.0	25.0
R□0 F1...F10	k	[mm]	753	878	1125
R□0 F1...F1F	k	[mm]	842	959	1177
R□0 F1	x_4	[mm]	151	157	201
	m_4	[mm]		31.0	
E□□ / T□□ / S□□ / F1...F10	k	[mm]	797	916	1163
E□□ / T□□ / S□□ / F1...F1F	k	[mm]	885	998	1215
E□□ / T□□ / S□□ / F1	x_4	[mm]	146	162	200
	m_4	[mm]		31.0	
R□0 / E□□ / T□□ / S□□ / F2...F10	k	[mm]	822	948	1163
R□0 / E□□ / T□□ / S□□ / F2...F1F	k	[mm]	910	1030	1215
R□0 / E□□ / T□□ / S□□ / F2	x_4	[mm]	146	162	200
	m_4	[mm]		31.0	



Dimensions, forced ventilated

MCA20/22/26 motors in B35 design

	g	g_1	g_2	g_4	m_1	m_3	m_6	n_1	n_3	n_4	n_6
	[mm]	[mm]	[mm]	[mm]	[mm]	[mm]	[mm]	[mm]	[mm]	[mm]	[mm]
MCA20	200	171	168	141	154	72	51	128	40	28	28
MCA22	220	203		153	190			171			
MCA26	260	256		173	234			212			

	o	P_1	P_2	P_3	P_4	x_1	x_3	x_6
	[mm]	[mm]	[mm]	[mm]	[mm]	[mm]	[mm]	[mm]
MCA20	206	M32x1.5	M25x1.5	M20x1.5	M16x1.5	299	422	101
MCA22	230	M50x1.5	M40x1.5			380		108
MCA26	269	M63x1.5	M50x1.5			465		152

	d	d	d_2	l	l_1	l_2	u	t
	k6	m6		-0.7 ... 0.3				
	[mm]	[mm]	[mm]		[mm]	[mm]	[mm]	[mm]
MCA20	38		M12	80	5.0	70	10.0	41.0
MCA22								
MCA26		55	M20	110		100	16.0	59.0

	h	b_5	b_7	s_5	i_5
	[mm]	[mm]	[mm]	[mm]	[mm]
MCA20	100	366	160	11.5	134
MCA22	112	472	190		133
MCA26	132	581	215	14.0	165

	a_2	a_3	b_2	b_2	c_2	e_2	f_2	s_2
			j6	h6				
	[mm]	[mm]	[mm]	[mm]	[mm]	[mm]	[mm]	[mm]
MCA20	250	196	180		15	215	4.0	14
MCA22	300	240	230			265		
MCA26	400	320		300		350	5.0	18

- ► Speed/angle sensor: RS0 / S□□ / E□□ / T□□
- ► Brake: B0 / F1 / F2
- ► Blower: F10 / F1F





Permanent magnet holding brake

The asynchronous servo motors MCA10 to 19 and 21 can be fitted with integral permanent magnet holding brakes.
In the case of permanent magnet brakes, the rated torque applies solely as holding torque at standstill. This is due to the nature of their design. During braking from full motor speed, e.g. in the event of emergency stops, the braking torque is significantly reduced.
As such, they may not be used as safety elements (particularly with lifting axes) without additional measures being implemented.
The brakes are activated when the supply voltage is disconnected (closed-circuit principle). When using the brakes purely as holding brakes, virtually no wear occurs on the friction surfaces.

For traversing axes, adherence to the permissible load/brake motor (J_L / J_{MB}) moment of inertia ensures that the permissible maximum switching rate of the brake will not be exceeded and at least 2,000 emergency stop functions can be performed from a speed of 3,000 rpm.
For lifting axes, the load torque resulting from the weight acts additionally. In this case the specifications for J_L / J_{MB} do not apply.

Caution:
The brakes used are not safety brakes in the sense that a reduction in torque may arise as a result of disruptive factors that cannot be influenced, e.g. oil ingress.

The ohmic voltage drop along the cable must be taken into consideration in long motor supply cables and must be compensated for by a higher voltage at the line input.

The following applies for Lenze system cables:

$$U[V] = U_B[V] + 0.08\frac{[V]}{[A]\cdot[m]}\cdot l_{Lg}[m]\cdot I_B[A]$$

If no suitable voltage (incorrect value, incorrect polarity) is applied to the brake, the brake will be applied and can be overheated and destroyed by the motor continuing to rotate.
The shortest switching times of the brakes are achieved by DC switching of the voltage. A spark suppressor is required to suppress interference and to increase the service life of the relay contacts here.



Permanent magnet holding brake



Permanent magnet holding brake

Rated data with standard braking torque

► The figures stated apply to servo motors. They only apply to geared servo motors when the servo motor is connected via a mounting flange.

	$U_{N, DC}$ [3, 4, 7]	$U_{N, AC}$ [5, 7]	M_N	M_N	M_{av}	I_N [2]	J	t_1 [1]	t_2 [1]	Q_E [6]	m	J_{MB}	J_L/J_{MB}
			20 °C	120 °C	120 °C								
	[V]	[V]	[Nm]	[Nm]	[Nm]	[A]	[kgcm²]	[ms]	[ms]	[J]	[kg]	[kgcm²]	
MCA10	24		3.30	2.50	1.20	0.50	0.38	10.0	20.0	350	0.90	2.78	24.5
	205					0.060							
MCA13	24		12.0	11.0	5.50	0.67	1.06	20.0	29.0	400	0.80	9.36	7.70
	205					0.080							
MCA14	24		15.0	12.0	6.00	0.75	3.60	13.0	30.0	700	1.50	22.8	5.20
	205					0.090							
MCA17	24		24.0	22.0	11.0	0.75		25.0	50.0	1200		39.6	5.10
	205					0.090							
MCA19	24		46.0	40.0	18.0	1.00	9.50		73.0	1900	2.70	81.5	3.70
	205					0.12							
MCA21	24		88.0	80.0	35.0	1.46	31.8	53.0	97.0	2800	5.00	212	1.70
	205					0.18							

[1] Engagement and disengagement times are valid for rated voltage (± 0 %) and protective circuit for brakes with varistor for DC switching. The times may increase without a protective circuit.
[2] The currents are the maximum values when the brake is cold (value used for dimensioning the current supply). The values for a motor at operating temperature are considerably lower.
[3] With 24 V DC brake: smoothed DC voltage, ripple ≤ 1 %.
With 205 V DC brake: connection to 230 V AC through rectifier.
[4] UR not possible in the case of a brake with a 205 V supply voltage.
[5] UR not possible in the case of a brake with 230 V supply voltage.
[6] Maximum switching energy per emergency stop at n = 3000 r/min for at least 2000 emergency stops.
[7] Voltage tolerance: permanent magnet brakes -10% to +5%
spring-applied brakes ±10%



Permanent magnet holding brake

Rated data with increased braking torque

► These ratings apply only for geared servo motors with integrated servo motor (without mounting flange).

	$U_{N, DC}$ [3, 4, 7]	M_N	M_N	M_{av}	I_N [2]	J	t_1 [1]	t_2 [1]	Q_E [6]	m	J_{MB}	J_L/J_{MB}
		20 °C	120 °C	120 °C								
	[V]	[Nm]	[Nm]	[Nm]	[A]	[kgcm²]	[ms]	[ms]	[J]	[kg]	[kgcm²]	
MCA10	24	6.00	5.00	2.50	0.67	1.06	20.0	29.0	400	0.80	3.46	22.4
	205				0.80							
MCA13	24	15.0	12.0	6.00	0.75	3.60	13.0	30.0	700	1.50	11.9	8.40
	205				0.090							
MCA14	24	23.0	20.0	20.0	0.92	9.50	18.0	55.0	1350	2.40	22.8	6.60
	205				0.12							
MCA17	24				0.92						45.5	5.00
	205				0.12							
MCA19	24	48.0	40.0		1.46	31.8	30.0	100	2800	4.80	104	4.50
	205				0.18							
MCA21	24	88.0	80.0	35.0	1.46		53.0	97.0		5.00	212	1.70
	205				0.18							

[1] Engagement and disengagement times are valid for rated voltage (± 0 %) and protective circuit for brakes with varistor for DC switching. The times may increase without a protective circuit.
[2] The currents are the maximum values when the brake is cold (value used for dimensioning the current supply). The values for a motor at operating temperature are considerably lower.
[3] With 24 V DC brake: smoothed DC voltage, ripple ≤ 1 %.
With 205 V DC brake: connection to 230 V AC through rectifier.
[4] UR not possible in the case of a brake with a 205 V supply voltage.
[5] UR not possible in the case of a brake with 230 V supply voltage.
[6] Maximum switching energy per emergency stop at n = 3000 r/min for at least 2000 emergency stops.
[7] Voltage tolerance: permanent magnet brakes -10% to +5%
spring-applied brakes ±10%



Spring-applied holding brake

Spring-operated holding brakes are available for the asynchronous servo motors MCA20, 22 and 26.
The brakes are activated when the supply voltage is disconnected (closed-circuit principle). When using the brakes purely as holding brakes, virtually no wear occurs on the friction surfaces.

Caution:
The brakes used are not safety brakes in the sense that a reduction in torque may arise as a result of disruptive factors that cannot be influenced, e.g. oil ingress.

The ohmic voltage drop along the cable must be taken into consideration in long motor supply cables and must be compensated for by a higher voltage at the line input.

The following applies for Lenze system cables:

$$U[V] = U_B[V] + 0.08\frac{[V]}{[A]\cdot[m]}\cdot l_{Lg}[m]\cdot I_B[A]$$

If no suitable voltage (incorrect value, incorrect polarity) is applied to the brake, the brake will be applied and can be overheated and destroyed by the motor continuing to rotate.
The shortest switching times of the brakes are achieved by DC switching of the voltage. A spark suppressor is required to suppress interference and to increase the service life of the relay contacts here.



Spring-applied holding brake



Spring-applied holding brake

Rated data with standard braking torque

► The figures stated apply to servo motors. They only apply to geared servo motors when the servo motor is connected via a mounting flange.

	$U_{N, DC}$ [3, 4, 7]	$U_{N, AC}$ [5, 7]	M_N	M_N	M_{av}	I_N [2]	J	t_1 [1]	t_2 [1]	Q_E [6]	m	J_{MB}	J_L/J_{MB}
			20 °C	120 °C	120 °C								
	[V]	[V]	[Nm]	[Nm]	[Nm]	[A]	[kgcm²]	[ms]	[ms]	[J]	[kg]	[kgcm²]	
MCA20	24		90.0	80.0	50.0	3.13	6.88	70.0	220	18000	13.0	177	19.6
		230				0.37							
MCA22	24		150	130	80.0	3.75	18.1	50.0	260	23000	20.5	505	8.20
		230				0.44		130					
MCA26	24		300	260	160	3.75	36.3	175	320	39000	26.0	1405	12.7
		230			200	0.37	70.4		360	51000	30.7		

Rated data with increased braking torque

► The figures stated apply to servo motors. They only apply to geared servo motors when the servo motor is connected via a mounting flange.

	$U_{N, DC}$ [3, 4, 7]	$U_{N, AC}$ [5, 7]	M_N	M_N	M_{av}	I_N [2]	J	t_1 [1]	t_2 [1]	Q_E [6]	m	J_{MB}	J_L/J_{MB}
			20 °C	120 °C	120 °C								
	[V]	[V]	[Nm]	[Nm]	[Nm]	[A]	[kgcm²]	[ms]	[ms]	[J]	[kg]	[kgcm²]	
MCA20	24		150	130	100	2.58	14.1	70.0	240	31000	15.4	189	33.0
		230				0.30							
MCA22	24		300	260	160	3.75	36.3	175	320	39000	26.0	523	14.1
		230				0.44		130	310				
MCA26	24		500	430	260	3.75	70.4	175	390	51000	30.8	1405	12.7
		230				0.44							

[1] Engagement and disengagement times are valid for rated voltage (± 0 %) and protective circuit for brakes with varistor for DC switching. The times may increase without a protective circuit.
[2] The currents are the maximum values when the brake is cold (value used for dimensioning the current supply). The values for a motor at operating temperature are considerably lower.
[3] With 24 V DC brake: smoothed DC voltage, ripple ≤ 1 %.
With 205 V DC brake: connection to 230 V AC through rectifier.
[4] UR not possible in the case of a brake with a 205 V supply voltage.
[5] UR not possible in the case of a brake with 230 V supply voltage.
[6] Maximum switching energy per emergency stop at n = 3000 r/min for at least 2000 emergency stops.
[7] Voltage tolerance: permanent magnet brakes -10% to +5%
spring-applied brakes ±10%



Resolver

Stator-fed resolver with two stator windings offset by 90° and one rotor winding with transformer winding.

Speed/angle sensor					
	1)			RS0	RV0
Product key					
				RS0	RV03
Resolution					
Angle			[']	0.80	
Accuracy					
			[']	-10 ... 10	
Absolute positioning					
				1 revolution	
Max. speed					
	n_{max}		[r/min]	8000	
Max. input voltage					
DC	$U_{in,max}$		[V]	10.0	
Max. input frequency					
	$f_{in,max}$		[kHz]	4.00	
Ratio					
Stator / rotor		± 5 %		0.30	
Rotor impedance					
	Z_{ro}		[Ω]	51 + j90	
Stator impedance					
	Z_{so}		[Ω]	102 + j150	
Impedance					
	Z_{rs}		[Ω]	44 + j76	
Min. insulation resistance					
At DC 500 V	R		[MΩ]	10.0	
Number of pole pairs					
				1	
Max. angle error					
			[']	-10 ... 10	
Inverter assignment					
				E84AVTC E94A ECS EVS93	

1) 6 - Product key > speed/angle sensor

Speed-dependent safety functions

Suitable for safety function				
			No	Yes
Max. permissible angular acceleration				
MCA10 ... MCA19 2)	α	[rad/s²]		22000
MCA20 ... MCA26 2)	α	[rad/s²]		22000
Functional safety				
IEC 61508				SIL3
EN 13849-1				Up to Performance Level e

2) 1 - Single encoder concepts with resolvers



Incremental encoder and SinCos absolute value encoder

Encoder type			TTL incremental		SinCos incremental	
Speed/angle sensor						
	1)		T20	T40	S20	S1S
Product key						
			IG2048-5V-T	IG4096-5V-T	IG2048-5V-S	IG1024-5V-V3
Encoder type						
					Single-turn	
Pulses						
			2048	4096	2048	1024
Output signals						
			TTL		1 Vss	
Interfaces						
			A, B, N track and inverted			
Absolute revolutions						
			0			
Resolution						
Angle 2)		[']	2.60	1.30	0.40	
Accuracy						
		[']	-2 ... 2		-0.8 ... 0.8	
Min. input voltage						
DC	$U_{in,min}$	[V]	4.75		4.50	4.75
Max. input voltage						
DC	$U_{in,max}$	[V]	5.25		5.50	5.25
Max. speed						
	n_{max}	[r/min]	8789		5273	8000
Max. current consumption						
	I_{max}	[A]	0.15		0.10	0.070
Limit frequency						
	f_{max}	[kHz]	300		180	200
Inverter assignment						
			E84AVTC E94A ECS EVS93			E94A

1) 6 - Product key > speed/angle sensor

2) Inverter-dependent.

Speed-dependent safety functions

Suitable for safety function						
			No	No	No	Yes
Max. permissible angular acceleration						
MQA20 ... MQA26	α	[rad/s²]				73000
Functional safety						
IEC 61508						SIL3
EN 13849-1						Up to Performance Level e



Incremental encoder and SinCos absolute value encoder

Encoder type			SinCos absolute value				
Speed/angle sensor	[1]		EQI	SRS	SRM	ECN	EQN
Product key			AM32-5V-E	AS1024-8V-H	AM1024-8V-H	AS2048-5V-E	AM2048-5V-E
Encoder type			Multi-turn	Single-turn	Multi-turn	Single-turn	Multi-turn
Pulses			32	1024		2048	
Output signals			1 Vss				
Interfaces			EnDat	Hiperface		EnDat	
Absolute revolutions			4096	1	4096	1	4096
Resolution							
Angle		[']	0.40				
Accuracy		[']	-5 ... 5	-0.8 ... 0.8		-0.6 ... 0.6	
Min. input voltage							
DC	$U_{in,min}$	[V]	4.75	7.00		4.75	
Max. input voltage							
DC	$U_{in,max}$	[V]	5.25	12.0		5.25	
Max. speed							
	n_{max}	[r/min]	12000	6000		12000	
Max. current consumption							
	I_{max}	[A]	0.17	0.080		0.15	0.25
Limit frequency							
	f_{max}	[kHz]	6.00	200			
Inverter assignment			E94A	E84AVTC E94A ECS EVS93		E94A	

[1] 6 - Product key > speed/angle sensor



Blowers

Rated data for 50 Hz

		Enclosure	Number of phases					
				U_{min}	U_{max}	$U_{N, AC}$	P_N	I_N
				[V]	[V]	[V]	[kW]	[A]
MCA13	F10	IP54	1	210	240	230	0.019	0.12
MCA14								
MCA17							0.040	0.25
MCA19								
MCA20	F10 F1F	IP23s			250		0.17	0.73
MCA21	F10	IP54			240		0.060	0.26
MCA22	F10 F1F	IP23s IP54			250		0.24	1.05
MCA26							0.40	1.75

Rated data for 60 Hz

		Enclosure	Number of phases					
				U_{min}	U_{max}	$U_{N, AC}$	P_N	I_N
				[V]	[V]	[V]	[kW]	[A]
MCA13	F10	IP54	1	210	240	230	0.019	0.12
MCA14								
MCA17							0.040	0.25
MCA19								
MCA20	F10 F1F	IP23s			250		0.20	0.90
MCA21	F10	IP54			240		0.060	0.26
MCA22	F10 F1F	IP23s IP54			250		0.28	1.23
MCA26							0.41	1.82



Temperature monitoring

The thermal sensors (1x KTY 83-110) used continuously monitor the motor temperature. The temperature signal is transmitted over the system cable of the feedback system to the servo controller.
This means that the temperature of the motor is determined with great accuracy in the permitted operating range and at the same time the overtemperature response configured in the controller is executed in the event of overtemperature in one of the winding phases.

Variation of resistance

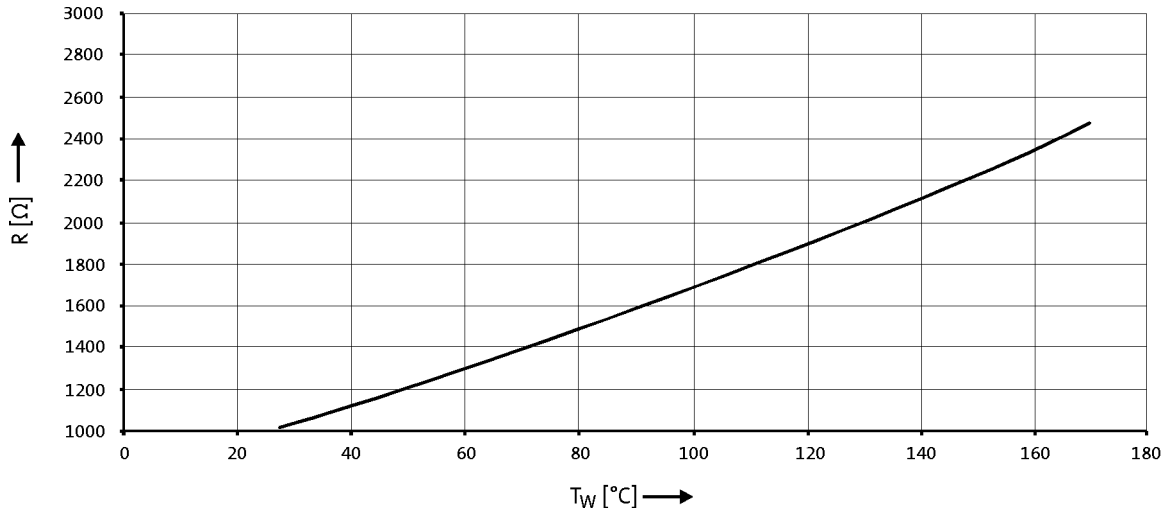

► If the detector is supplied with a measured current of 1 mA, the above relationship between the temperature and the resistance applies.



Terminal box

Motors MCA10 to 19/21

If a servo motor is to be connected to an existing cable or plug connectors are not to be used for other reasons, the connection can also be made via a terminal box.

The motor can either be fitted with a terminal box for the power connection and motor holding brake or a second terminal box provided to connect the motor feedback and blower (if applicable).

Connections

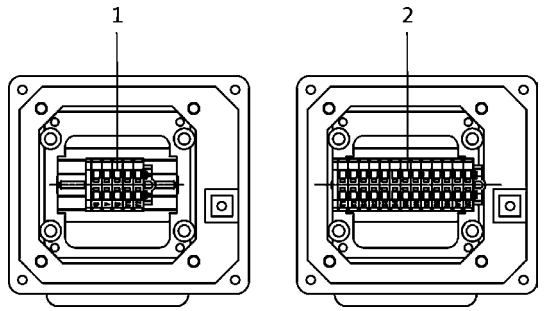

1: Power connection + brake connection + PE connection.

2: Angle/speed sensor connection + thermal sensor connection

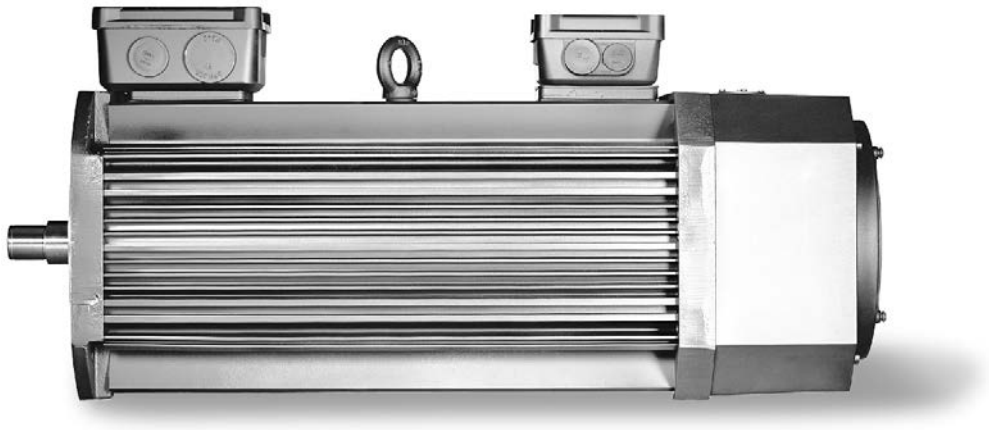

MCA asynchronous servo motors with blower and terminal box



Terminal box

Motors MCA10 to 19/21

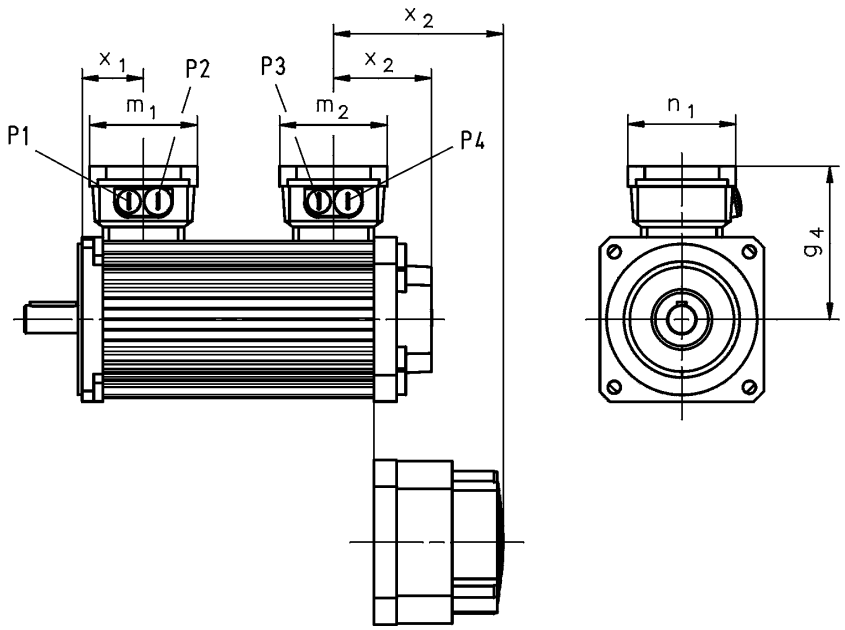

			MCA10I40	MCA13I41	MCA14L20	MCA17N23	MCA19S23	MCA21X25
					MCA14L41	MCA17N41	MCA19S42	MCA21X42
R□0 B0	x_2	[mm]	78	77	85		93	97
R□0 P□	x_2	[mm]	78	77	85		93	97
S□□ / E□□ / T20 / B0	x_2	[mm]	132	131	140	139	143	147
S□□ / E□□ / T20 / P□	x_2	[mm]	132	131	140	139	143	147

			MCA13I34	MCA14L16	MCA17N17	MCA19S17	MCA21X17
				MCA14L35	MCA17N35	MCA19S35	MCA21X35
R□0 B0	x_2	[mm]	145	147	171	190	193
R□0 P□	x_2	[mm]	145	147	171	190	193
S□□ / E□□ / T20 / B0	x_2	[mm]	199	202	225	240	243
S□□ / E□□ / T20 / P□	x_2	[mm]	199	202	225	240	243

- ► Speed/angle sensor: RS0 / S□□ / E□□ / T20
- ► Brake: B0 / P□

	g_4	m_1	m_2	n_1	x_1	P_1	P_2	P_3	P_4
	[mm]	[mm]	[mm]	[mm]	[mm]	[mm]	[mm]	[mm]	[mm]
MCA10	113	93	93	93	54	M20x1.5	M20x1.5	M20x1.5	M20x1.5
MCA13	125				57				
MCA14	133				53				
MCA17	141				55				
MCA19	158	115	115	115	64	M25x1.5	M32x1.5		
MCA21	169				70				



ICN connector

Servo motors MCA10 to 21 provide ICN connectors as standard for electrical connection. Servo motors MCA22 and MCA26 provide a terminal box for electrical connection.

A connector is used for the connection of motor and brake.
The connections to the feedback system/temperature monitoring and the blower each employ a separate connector.

The connectors can be rotated through 270° and are fitted with a bayonet catch for SpeedTec connectors. As the connector fixing is also compatible with conventional union nuts. Existing mating connectors can therefore still be used without difficulty.

Connection for power and brake

► MCA10 to 17

Pin assignment			
Contact	Designation	Meaning	
1	BD1	Holding brake +	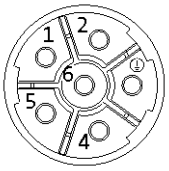
2	BD2	Holding brake -	
PE	PE	PE conductor	
4	U	Phase U power	
5	V	Phase V power	
6	W	Phase W power	

► MCA19 to 21

Pin assignment			
Contact	Designation	Meaning	
1		Not assigned	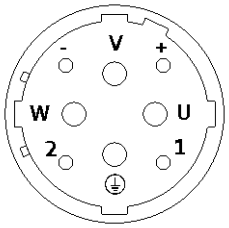
2			
+	BD1	Holding brake +	
-	BD2	Holding brake -	
PE	PE	PE conductor	
U	U	Phase U power	
V	V	Phase V power	
W	W	Phase W power	



ICN connector

Feedback connection

► Resolver

Pin assignment			
Contact	Designation	Meaning	
1	+Ref	Transformer windings	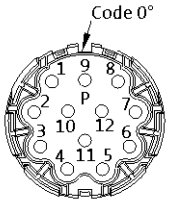
2	-Ref		
3	+VCC ETS	Supply: Electronic nameplate	
4	+COS	Cosine stator windings	
5	-COS		
6	+SIN	Sine stator windings	
7	-SIN		
8		Not assigned	
9			
10			
11	+KTY	KTY temperature sensor	
12	-KTY		

► Hiperface incremental encoder and SinCos absolute value encoder

Pin assignment			
Contact	Designation	Meaning	
1	B	Track B/+SIN	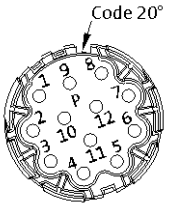
2	A^-	Track A inverse/-COS	
3	A	Track A/+COS	
4	$+U_B$	Supply +	
5	GND	Mass	
6	Z^-	Zero track inverse/-RS485	
7	Z	Zero track/+RS485	
8		Not assigned	
9	B^-	Track B inverse/-SIN	
10		Not assigned	
11	+KTY	KTY temperature sensor	
12	-KTY		



ICN connector

Feedback connection

► SinCos absolute value encoder with EnDat interface

Pin assignment			
Contact	Designation	Meaning	
1	U_P sensor	Supply: UP sensor	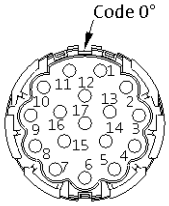
2		Not assigned	
3			
4	0 V sensor	Supply: 0 V sensor	
5	+KTY	KTY temperature sensor	
6	-KTY		
7	$+U_B$	Supply +	
8	Cycle	EnDat interface cycle	
9	Cycle$^-$	EnDat interface inverse cycle	
10	GND	Mass	
11	Shield	Encoder housing screen	
12	B	Track B	
13	B$^-$	Track B inverse/-SIN	
14	Data	EnDat interface data	
15	A	Track A	
16	A$^-$	Track A inverse	
17	Data$^-$	EnDat interface inverse data	

Blower connection

Pin assignment			
Contact	Designation	Meaning	
PE	PE	PE conductor	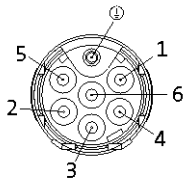
1	U1	Fan	
2	U2		
3		Not assigned	
4			
5			
6			







13449915

Lenze SE
Hans-Lenze-Straße 1
D-31855 Aerzen
Phone: +49 (0)5154 82-0
Telefax: +49 (0)5154 82 28 00

www.Lenze.com