L-force catalogue

Automation systems
Drive solutions

Controls
Inverter
Motors
Gearboxes
Engineering Tools

Motors: IE3 three-phase AC motors m500, IE3 three-phase AC motors m200

Lenze
As easy as that.

Contents of the L-force catalogue

About Lenze		Lenze makes many things easy for you.	
		A matter of principle: the right products for every application.	
		L-force product portfolio	
Automation systems		Controller-based Automation	1.1
		Drive-based automation	1.2
Drive solutions		HighLine tasks	2.1
		StateLine tasks	2.2
		BaseLine tasks	2.3
Controls	Visualisation	Panel PC v800	3.1
		Monitor v200	3.2
	Cabinet Controllers	Controller 3200 C	3.3
		Controller c300	3.4
	Panel Controllers	Controller p500	3.5
		Controller p300	3.6
		I/O System 1000	3.7
Inverter	Decentralised	Inverter Drives 8400 protec	4.1
		Inverter Drives 8400 motec	4.2
	Cabinet	Servo Drives 9400 HighLine	4.3
		Inverter Drives 8400 TopLine	4.4
		Servo-Inverter i700	4.5
		Inverter Drives 8400 HighLine	4.6
		Inverter Drives 8400 StateLine	4.7
		Inverter Drives 8400 BaseLine	4.8
Motors	Servo motors	MCS synchronous servo motors	5.1
		MD□KS synchronous servo motors	5.2
		MQA asynchronous servo motors	5.3
		MCA asynchronous servo motors	5.4
	Three-phase AC motors	IE3 three-phase AC motors m500	5.5
		Inverter opt. three-phase AC motors MF	5.6
		IE2 MH three-phase AC motors	5.7
		IE1 MD three-phase AC motors	5.8
		Lenze Smart Motor m300	5.9
		IE3 three-phase AC motors m200	5.10
		IE1/2 three-phase AC motors Basic MD/MH	5.11
Gearboxes	Axial gearboxes	GST helical gearboxes	6.1
		GFL shaft-mounted helical gearbox	6.2
	Right-angle gearboxes	GKR bevel gearboxes	6.3
		GKS helical-bevel gearbox	6.4
		GSS helical-worm gearboxes	6.5
	Motor data	Assignment see above	6.6
Engineering Tools		Navigator	7.1
		Drive Solution Designer	7.2
		Drive Solution Catalogue	7.3
		Engineer	7.4
		PLC Designer	7.5
		VisiWinNET®	7.6
		EASY Starter	7.7

Selected portfolio

Additional portfolio

Lenze makes many things easy for you.

With our motivated and committed approach, we work together with you to create the best possible solution and set your ideas in motion - whether you are looking to optimise an existing machine or develop a new one. We always strive to make things easy and seek perfection therein. This is anchored in our thinking, in our services and in every detail of our products. It's as easy as that!

1

Developing ideas

Are you looking to build the best machine possible and already have some initial ideas? Then get these down on paper together with us, starting with small innovative details and stretching all the way to completely new machines. Working together, we will develop an intelligent and sustainable concept that is perfectly aligned with your specific requirements.

2

Drafting concepts

We see welcome challenges in your machine tasks, supporting you with our comprehensive expertise and providing valuable impetus for your innovations. We take a holistic view of the individual motion and control functions here and draw up consistent, end-to-end drive and automation solutions for you - keeping everything as easy as possible and as extensive as necessary.

3

Implementing solutions

Our easy formula for satisfied customers is to establish an active partnership with fast decision making processes and an individually tailored offer. We have been using this principle to meet the ever more specialised customer requirements in the field of machine engineering for many years.

4

Manufacturing machines

Functional diversity in perfect harmony: as one of the few full-range providers in the market, we can provide you with precisely those products that you actually need for any machine task – no more and no less. Our L-force product portfolio, a consistent platform for implementing drive and automation tasks, is invaluable in this regard.

5

Ensuring productivity

Productivity, reliability and new performance peaks on a daily basis – these are our key success factors for your machine. After delivery, we offer you cleverly devised service concepts to ensure continued safe operation. The primary focus here is on technical support, based on the excellent application expertise of our highly-skilled and knowledgeable after-sales team.

A matter of principle: the right products for every application.

Lenze's extensive L-force product portfolio follows a very simple principle. The functions of our finely scaled products are assigned to the three lines Base-Line, State-Line or High-Line.

But what does this mean for you? It allows you to quickly recognise which products represent the best solution for your own specific requirements.

Powerful products with a major impact:
- Easy handling
- High quality and durability
- Reliable technologies in tune with the latest developments

Lenze products undergo the most stringent testing in our own laboratory. This allows us to ensure that you will receive consistently high quality and a long service life. In addition to this, five logistics centres ensure that the Lenze products you select are available for quick delivery anywhere across the globe. It's as easy as that!

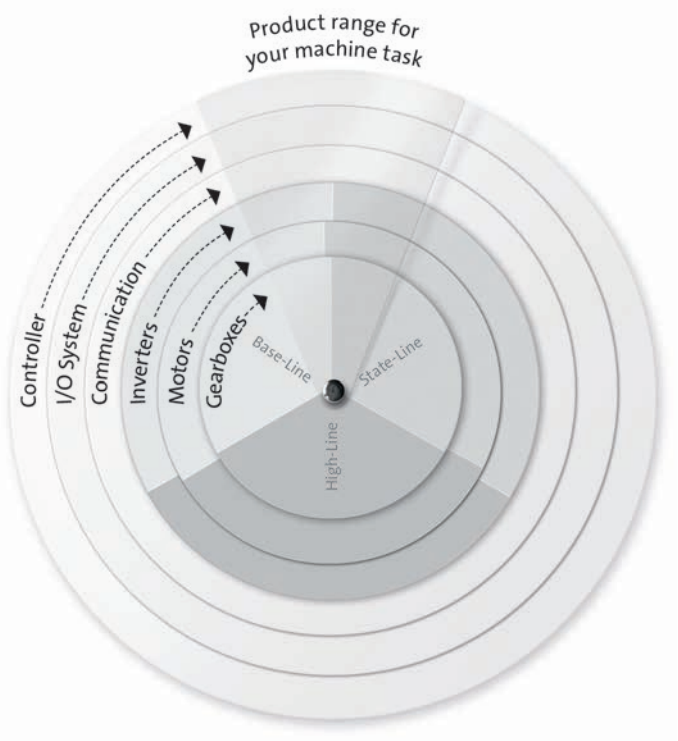

L-force product portfolio

Controls

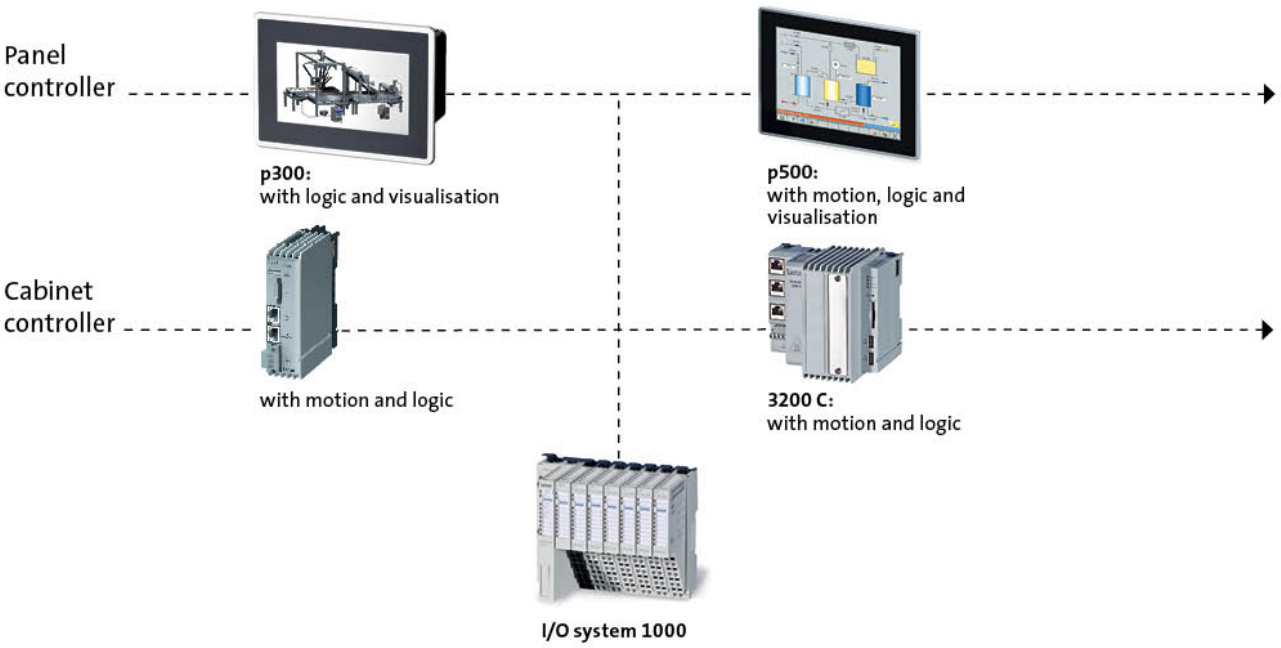

Engineering Tools

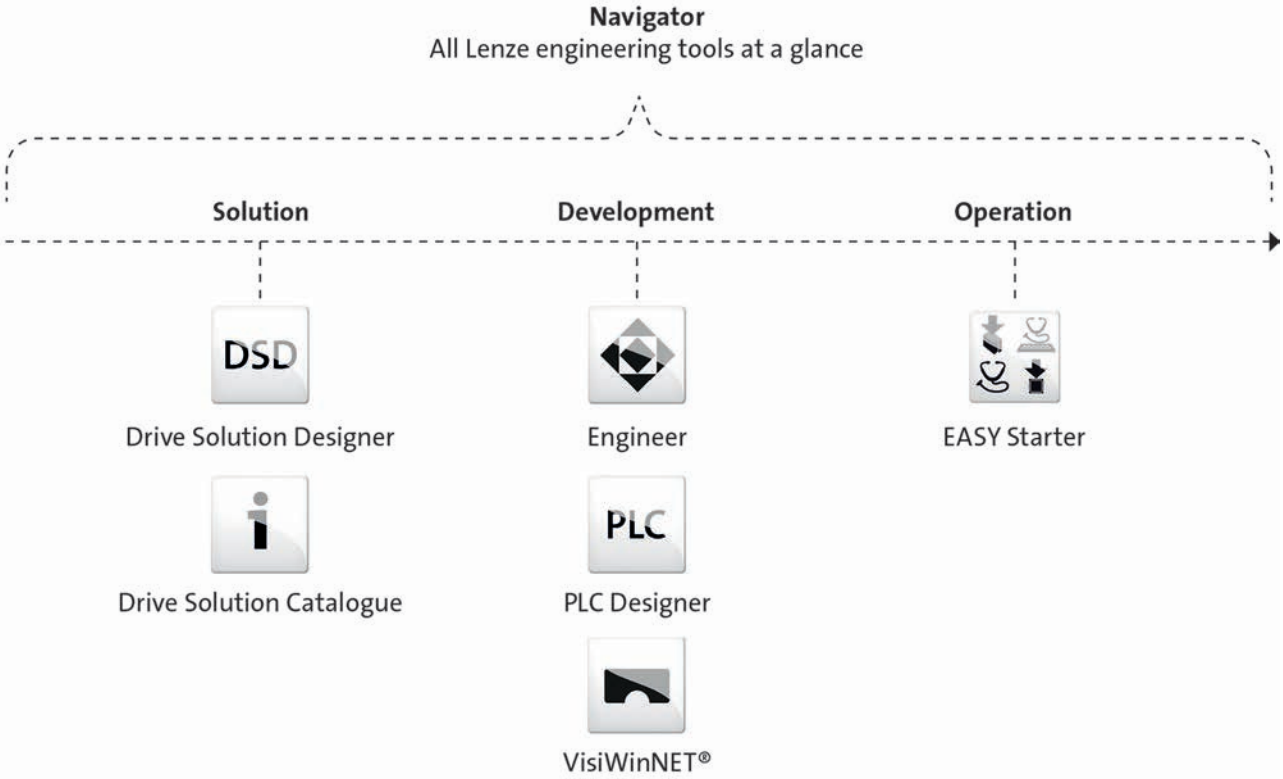

L-force product portfolio

Inverter

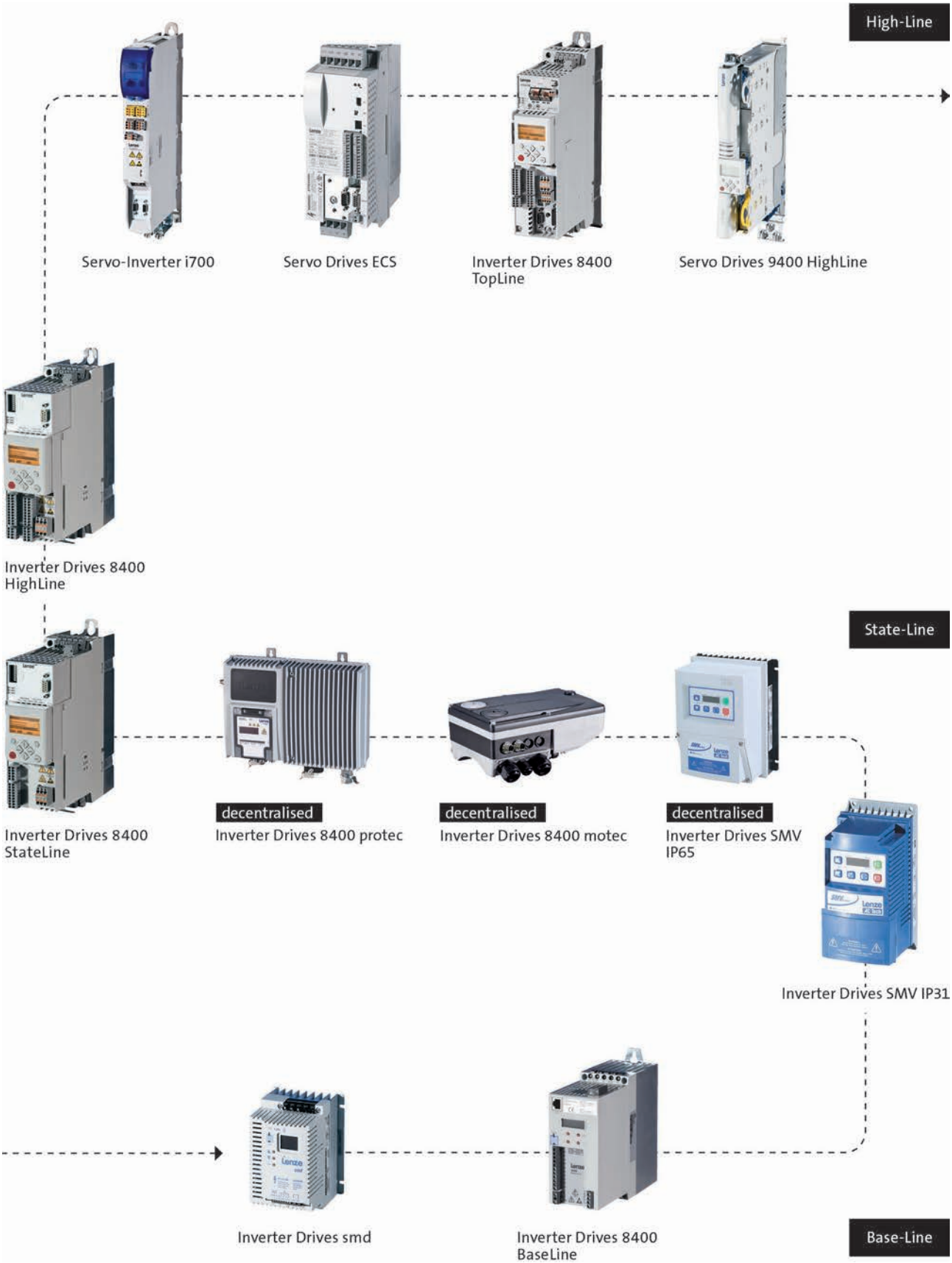

L-force product portfolio

Motors

High-Line

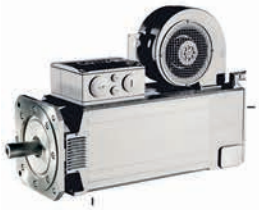

MQA asynchronous servo motors



SDSGS synchronous servo motors



MDXKS synchronous servo motors



Synchronous servo motors MCS



Asynchronous servo motors MCA



Asynchronous servo motors SDSGA

State-Line



MF three-phase AC motors



MH three-phase AC motors



MD three-phase AC motors



Basic MD/MH three-phase AC motors

Base-Line

L-force product portfolio

Gearboxes

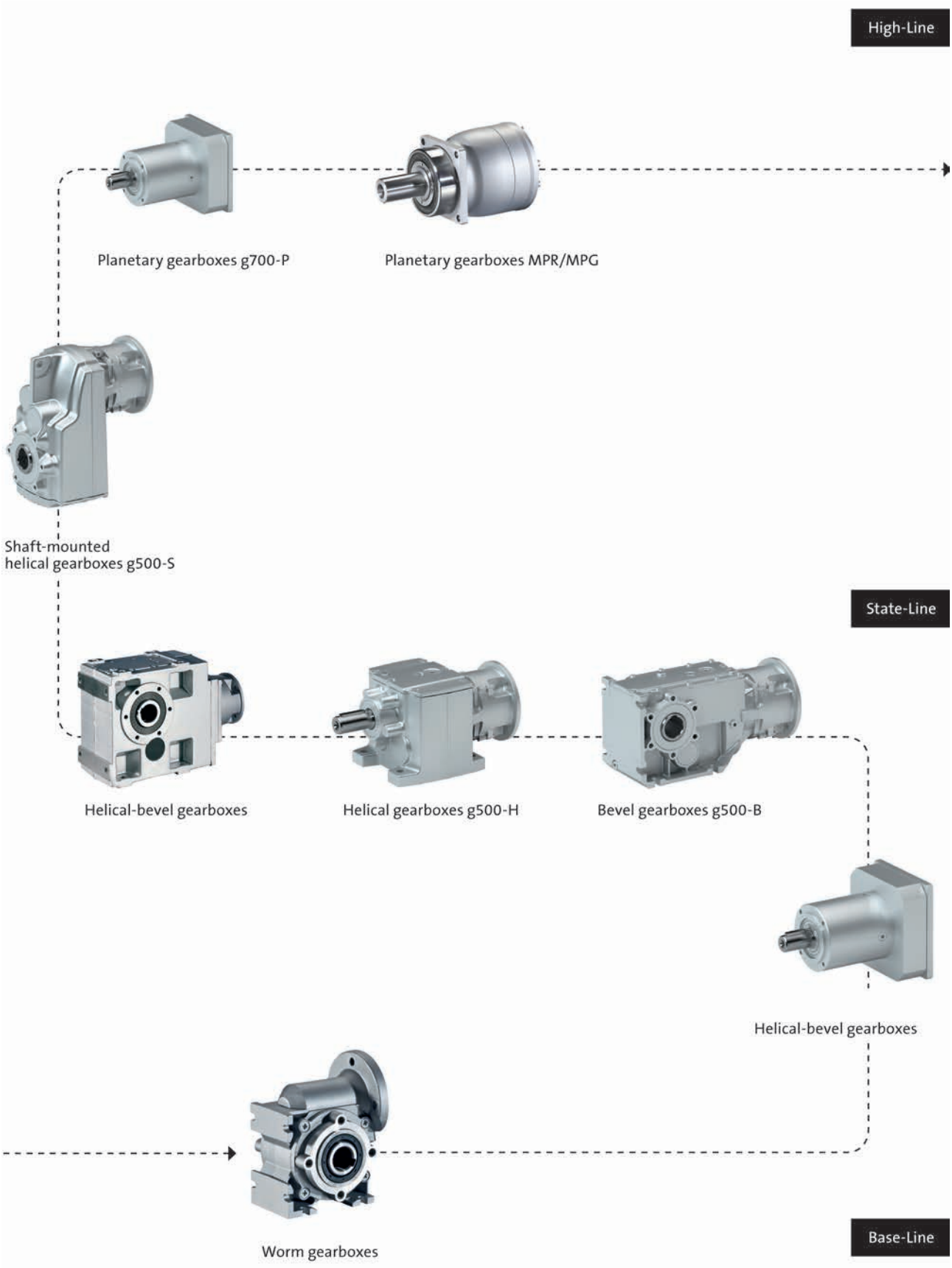

IE3 three-phase AC motors m500

Inverter operation 5.5 ... 45 kW

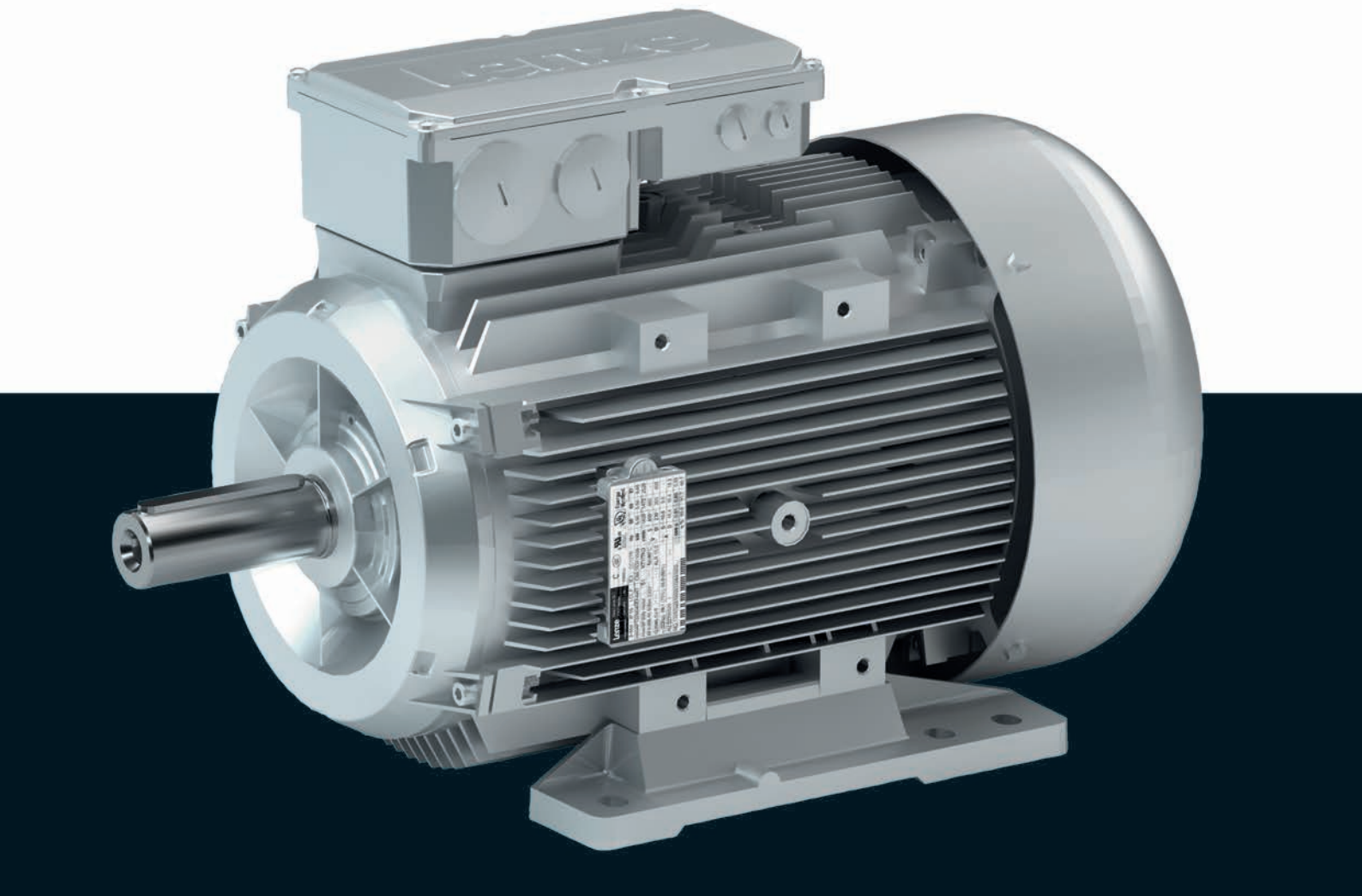

IE3 three-phase AC motors m500



Contents

General information	List of abbreviations	5.5 - 4
	Inverter-operated motors	5.5 - 5
	Product information	5.5 - 5
	Equipment	5.5 - 6
	The modular motor system	5.5 - 7
	Dimensioning	5.5 - 10
Technical data	Standards and operating conditions	5.5 - 11
	Permissible radial and axial forces	5.5 - 12
	Rated data for 50 Hz	5.5 - 14
	Rated data for 60 Hz	5.5 - 15
	Rated data for 87 Hz	5.5 - 16
	Dimensions, self-ventilated (4-pole)	5.5 - 17
	Dimensions, forced ventilated (4-pole)	5.5 - 22
	Additional length of the built-on accessories	5.5 - 27
Accessories	Surface and corrosion protection	5.5 - 29
	Motor connection	5.5 - 30
	Connection via terminal box	5.5 - 31
	Connections via ICN connectors	5.5 - 32
	Connection via M12 connector	5.5 - 36
	Connections via HAN connectors	5.5 - 37
	Spring-applied brake	5.5 - 40
	Temperature monitoring	5.5 - 52
	Blower	5.5 - 54
	Feedback	5.5 - 55



List of abbreviations

$\eta_{100\,\%}$	[%]	Efficiency
$\eta_{75\,\%}$	[%]	Efficiency
$\eta_{50\,\%}$	[%]	Efficiency
cos ϕ		Power factor
I_N	[A]	Rated current
I_{max}	[A]	Max. current consumption
J	[kgcm²]	Moment of inertia
m	[kg]	Mass
M_a	[Nm]	Starting torque
M_b	[Nm]	Stalling torque
M_{max}	[Nm]	Max. torque
M_N	[Nm]	Rated torque
n_N	[r/min]	Rated speed
P_N	[kW]	Rated power
P_{max}	[kW]	Max. power input

U_{max}	[V]	Max. mains voltage
U_{min}	[V]	Min. mains voltage
$U_{N,\Delta}$	[V]	Rated voltage
$U_{N,Y}$	[V]	Rated voltage

CE	Communauté Européenne
CSA	Canadian Standards Association
DIN	Deutsches Institut für Normung e.V.
EMC	Electromagnetic compatibility
EN	European standard
IEC	International Electrotechnical Commission
IM	International Mounting Code
IP	International Protection Code
NEMA	National Electrical Manufacturers Association
UL	Underwriters Laboratory Listed Product
UR	Underwriters Laboratory Recognized Product
VDE	Verband deutscher Elektrotechniker (Association of German Electrical Engineers)
CCC	China Compulsory Certificate
EAC	Customs union Russia / Belarus / Kazakhstan certificate
cURus	Combined certification marks of UL for the USA and Canada
UkrSEPRO	Certificate for Ukraine

IE3 three-phase AC motors m500

General information



Inverter-operated motors

In a power range of 0.12 to 45 KW, Lenze offers inverter-driven three-phase AC motors for comprehensive tasks.

They differ with regard to the efficiency class and can be used for the types required for open-loop or closed-loop controlled inverter operation.

Customer benefit

- Different efficiency classes for the greatest economic benefit
- Saving of space by compact direct mounting to Lenze gearboxes
- Market-oriented modular system enables the ubiquitous use for extensive machine tasks
- Connectors that are currently used on the market allow for a quick connection also if service tasks are to be carried out

Motor	Efficiency class	Power range	Supply voltage
MD three-phase AC motor	IE1 motor	0.12 ... 22 kW	230/400 and 460 V
MH three-phase AC motor	IE2 motor	0.75 ... 45 kW	230/400 and 460 V
MF three-phase AC motor		0.55 ... 22 KW	230/400 V
m500-P three-phase AC motor	IE3 motor	5.5 ... 45 kW	230/400 and 460 V

Product information

The product name

Operational performance	Product range		Design	Peak height	Motor length	Number of poles	Product
Inverter operation	m500	-	P	132	M	4	m500-P132M4
					L		m500-P132L4
				160	M		m500-P160M4
					L		m500-P160L4
				180	M		m500-P180M4
					L		m500-P180L4
					V		m500-P180V4
				200	M		m500-P200M4
				225			m500-P225M4
					L		m500-P225L4



Equipment

Overview

The equipment includes all the options available as standard and all the built-on accessories of the product.

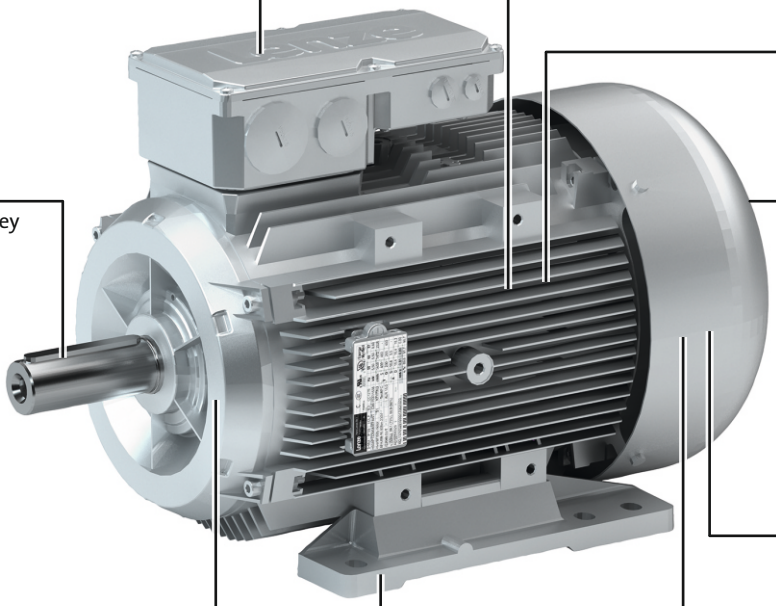

Motor connection
Terminal box
Connector ICN
Connector HAN

Output shaft
Solid shaft with feather key

Motor design
Flange (B5)with through holes

Motor design
Foot (B3)

Number of poles
4-pole, 5.5 ... 45 kW

Temperature monitoring
Thermal contact TKO
pTC thermistor
Thermal detector KTY

Cooling
Integral fan
Blower

Feedback
No
Resolver
Incremental encoder
Absolute value encoder

Spring-applied brake
No
Standard
Option manual release lever



The modular motor system

Motor details

Product	m500-P132M4	m500-P132L4	m500-P160M4	m500-P160L4	m500-P180M4	m500-P180L4
Technical data						
Rated power	5.5 kW	7,5 kW	11 kW	15 kW	18.5 kW	22 kW
Supply voltage	230/400 V; 460 V					
Operating mode	S1					
Motor design	B3 B5-FF265		B3 B5-FF300			
Motor shaft	38 x 80 mm		42 x 110 mm		48 x 110 mm	
Colour	Primed Paint in various corrosion-protection designs in accordance with RAL colours					
Surface and corrosion protection	Without OKS(uncoated) OKS-G (primed) OKS-S (Small); OKS-M (medium) OKS-L (large)					
Connection type	Terminal box ICN connector HAN-Modular connector		Terminal box HAN-Modular connector		Terminal box	
Spring-applied brake						
Rated torque [Nm]	60 80		80 150		150 260	
Brake voltage [V]	DC 24 AC 230 AC 400 AC 460					
Brake design	Standard					
	Standard Overexcited Cold Brake					
Options	Manual release lever Low noise					
Feedback	With absolute value encoder With incremental encoder With resolver					
Cooling	Integral fan Blower					
Temperature monitoring	TKO thermal contact PTC thermistor KTY83-110 thermal detector KTY84-130 thermal detector Thermal TCO contact + PTC thermistor Thermal contact TCO + thermal detector KTY83-110 Thermal TCO contact + thermal detector KTY84-130					
Approval	cURus [1)]					
Enclosure	IP55					

[1)] In preparation.



The modular motor system

Motor details

Product	m500-P180V4 [1]	m500-P200M4	m500-P225M4	m500-P225L4
Technical data				
Rated power	30 kW		37 kW	45 kW
Supply voltage	230/400 V; 460 V			
Operating mode	S1			
Motor design		B3 B5-FF350	B3 B5-FF400	
Motor shaft		55 x 110 mm	60 x 140 mm	
Colour	Primed Paint in various corrosion-protection designs in accordance with RAL colours			
Surface and corrosion protection	Without OKS(uncoated) OKS-G (primed) OKS-S (Small); OKS-M (medium) OKS-L (large)			
Connection type	Terminal box			
Spring-applied brake				
Rated torque [Nm]	150 260		400	
Brake voltage [V]	DC 24 AC 230 AC 400 AC 460			
Brake design	Standard			
	Standard Overexcited Cold Brake			
Options	Manual release lever Low noise			
Feedback	With absolute value encoder With incremental encoder With resolver			
Cooling	Integral fan Blower			
Temperature monitoring	TKO thermal contact PTC thermistor KTY83-110 thermal detector KTY84-130 thermal detector Thermal TCO contact + PTC thermistor Thermal contact TCO + thermal detector KTY83-110 Thermal TCO contact + thermal detector KTY84-130			
Approval	cURus [2]			
Enclosure	IP55			

[1] This motor is intended for direct mounting to a gearbox and is not available in motor design B3 or B5.
[2] In preparation.



The modular motor system

Motor details

Design



B3 (with foot)



B5 (with flange)

Connection type



Terminal box



ICN connector



HAN connector

Cooling: integral fan



Without built-on accessories



With spring-applied brake
With or without manual release lever



With feedback
With feedback and spring-applied brake

Cooling: blower



Without built-on accessories



With spring-applied brake
With or without manual release lever



With feedback
With feedback and spring-applied brake

5.5



Dimensioning

Torque derating at low motor frequencies

During operation with the rated torque at low speeds (< 20 Hz), the integral fan does not rotate fast enough anymore to ensure sufficient cooling of the motor. In order to prevent overheating, operation without a blower requires a torque reduction of the motor.
The blower cools the motor steadily and irrespective of the motor speed. A torque reduction is not required and the motor can be actuated with its rated torque from 5 Hz to the rated frequency.

The diagram shows the motor frame size-dependent torque reduction for self-ventilated motors, taking the thermal behaviour during actuation of the inverter into consideration.

Torque characteristics

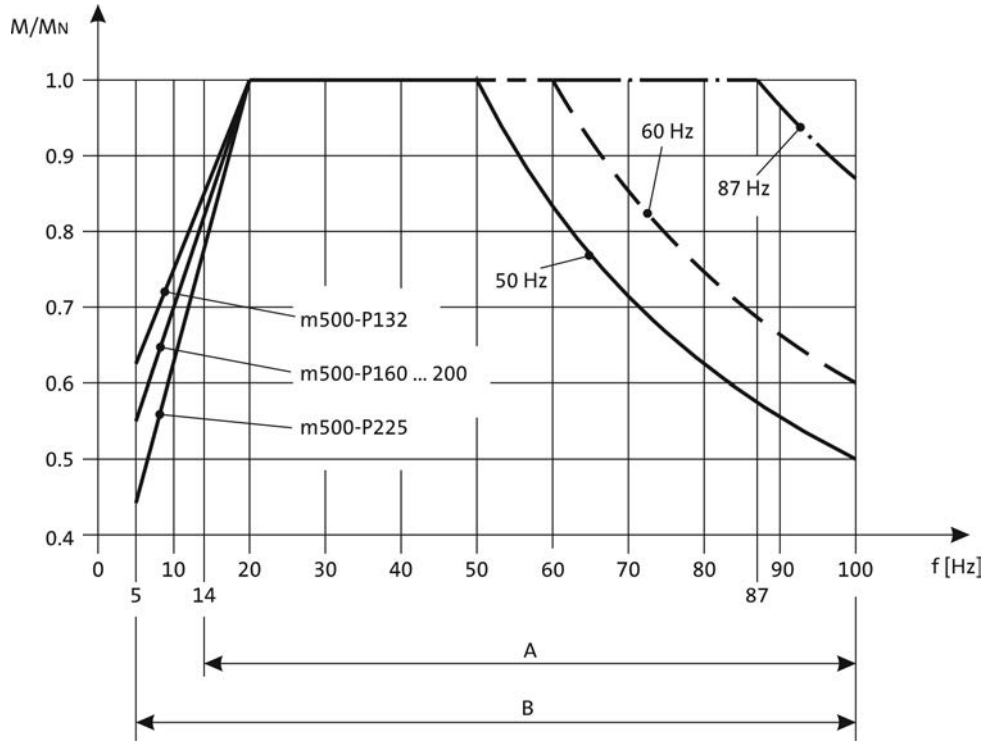

A = Operation with integral fan and brake
B = Operation with integral fan and brake control "Holding current reduction"

► The motor specifications stated in this catalogue for inverter operation apply to operation with a Lenze inverter. If you are uncertain, get in touch with the manufacturer of the inverter to ask whether the device is capable of driving the motor with the stated specifications (e.g. setting range, base frequency).

You can use the Drive Solution Designer for precise drive dimensioning.

The Drive Solution Designer helps you to carry out a fast and high-quality drive dimensioning.
The software includes well-founded and proven knowledge on drive applications and electro-mechanical drive components.

Please contact your Lenze sales office.



Standards and operating conditions

Overview

Enclosure			
EN 60529			IP55
Energy efficiency class			
IEC 60034-30			IE3
IEC 60034-2-1			Methodology for measuring efficiency
Conformity			
CE			Low-Voltage Directive
			2006/95/EC
Temperature class			
IEC/EN 60034-1; utilisation			B
IEC/EN 60034-1; insulation system (enamel-insulated wire)			F
Vibrational severity			
IEC/EN 60034-14			A
Climatic conditions			
Transport (EN 60721-3-2)			2K3 (temperature: -20 °C ... +70 °C)
Storage (EN 60721-3-1)			1K3 (temperature: -20 °C ... +60 °C)
Storage (EN 60721-3-1) > 3 months			1K3 (Temperature: -20 °C ... +40 °C)
Operation (EN 60721-3-3)			3K3 (temperature: -20°C ... +40°C)
Operation (EN 60721-3-3) with brake			3K3 (temperature: -10 °C ... +40 °C)
Operation (EN 60721-3-3) with blower			3K3 (Temperature: -15 °C ... +40 °C)
Max. ambient operating temperature			
With power reduction	$T_{opr,max}$	[°C]	60
Site altitude			
Amsl	H_{max}	[m]	4000

[1)] Types with deviating degrees of protection:
IP55 with brake (IP54 with manual release lever).

► In the European Union, the ErP Directive stipulates minimum efficiency levels for three-phase AC motors. Geared three-phase AC motors that do not conform with this Directive do not meet CE requirements and must not be marketed in the European Economic Area. For further information about the ErP Directive and the Lenze products to which it relates, please refer to the brochure entitled "International efficiency directives for three-phase AC motors".



Permissible radial and axial forces

Application of forces

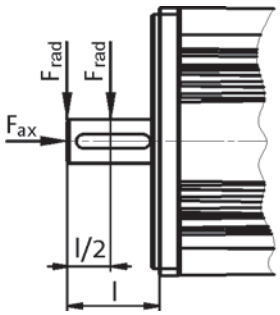

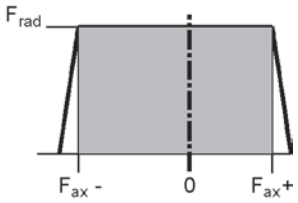

Application of force at l/2

► Forces at medium speed 2000 r/min.

Bearing service life L_{10}												
	10000 h			20000 h			30000 h			50000 h		
	F_{rad} [N]	$F_{ax,-}$ [N]	$F_{ax,+}$ [N]	F_{rad} [N]	$F_{ax,-}$ [N]	$F_{ax,+}$ [N]	F_{rad} [N]	$F_{ax,-}$ [N]	$F_{ax,+}$ [N]	F_{rad} [N]	$F_{ax,-}$ [N]	$F_{ax,+}$ [N]
m500-P132M4	2323	-653	1253	1863	-422	1022	1639	-313	913	1357	-201	801
m500-P132L4	2323	-653	1253	1863	-422	1022	1639	-313	913	1357	-201	801
m500-P160M4	4074	-1407	2067	3264	-984	1644	2871	-787	1447	2444	-583	1243
m500-P160L4	4074	-1407	2067	3264	-984	1644	2871	-787	1447	2444	-583	1243
m500-P180M4	4943	-1580	2480	3969	-1088	1988	3496	-854	1754	2983	-594	1494
m500-P180L4	4943	-1580	2480	3969	-1088	1988	3496	-854	1754	2983	-594	1494
m500-P200M4	6666	-2202	3122	5359	-1555	2475	4724	-1251	2171	4036	-942	1862
m500-P225M4	7386	-2527	3477	5956	-1800	2750	5260	-1460	2410	4508	-1111	2061
m500-P225L4	7386	-2527	3477	5956	-1800	2750	5260	-1460	2410	4508	-1111	2061

► The values for the bearing service life L_{10} refer to an average speed of 2000 r/min. Depending on the ambient temperatures, the service life of the bearings is also reduced by the grease lifetime.
► Data for axial forces relate to the maximum radial force with the corresponding bearing service life.



Permissible radial and axial forces

Application of force at l

► Forces at medium speed 2000 r/min.

Bearing service life L_{10}												
	10000 h			20000 h			30000 h			50000 h		
	F_{rad}	$F_{ax,-}$	$F_{ax,+}$	F_{rad}	$F_{ax,-}$	$F_{ax,+}$	F_{rad}	$F_{ax,-}$	$F_{ax,+}$	F_{rad}	$F_{ax,-}$	$F_{ax,+}$
	[N]	[N]	[N]	[N]	[N]	[N]	[N]	[N]	[N]	[N]	[N]	[N]
m500-P132M4	2091	-653	1253	1677	-422	1022	1475	-313	913	1257	-201	801
m500-P132L4	2091	-653	1253	1677	-422	1022	1475	-313	913	1257	-201	801
m500-P160M4	3610	-1407	2067	2892	-984	1644	2543	-787	1447	2166	-583	1243
m500-P160L4	3610	-1407	2067	2892	-984	1644	2543	-787	1447	2166	-583	1243
m500-P180M4	4462	-1580	2480	3583	-1088	1988	3156	-854	1754	2693	-594	1494
m500-P180L4	4462	-1580	2480	3583	-1088	1988	3156	-854	1754	2693	-594	1494
m500-P200M4	6069	-2202	3122	4880	-1555	2475	4301	-1251	2171	3675	-942	1862
m500-P225M4	6588	-2527	3477	5313	-1800	2750	4692	-1460	2410	4021	-1111	2061
m500-P225L4	6588	-2527	3477	5313	-1800	2750	4692	-1460	2410	4021	-1111	2061

► The values for the bearing service life L_{10} refer to an average speed of 2000 r/min. Depending on the ambient temperatures, the service life of the bearings is also reduced by the grease lifetime.
► Data for axial forces relate to the maximum radial force with the corresponding bearing service life.



Rated data for 50 Hz

4-pole motors

	P_N	n_N	$U_{N,\Delta}$	$I_{N,\Delta}$	$U_{N,Y}$	$I_{N,Y}$	I_a/I_N
			± 5 %		± 5 %		
	[kW]	[r/min]	[V]	[A]	[V]	[A]	
m500-P132M4	5.50	1459	230	18.4	400	10.6	8.70
m500-P132L4	7.50	1458	230	25.3	400	14.6	9.10
m500-P160M4	11.0	1473	230	38.1	400	22.0	8.10
m500-P160L4	15.0	1475	230	51.6	400	29.8	8.20
m500-P180M4	18.5	1474	230	59.4	400	34.3	7.70
m500-P180L4	22.0	1478	230	69.5	400	40.1	7.70
m500-P180V4 [1)]	30.0	1480	230	94.1	400	54.3	8.10
m500-P200M4	30.0	1480	230	94.1	400	54.3	8.10
m500-P225M4	37.0	1487	230	124	400	71.3	7.50
m500-P225L4	45.0	1485	230	144	400	83.0	7.70

	M_N	M_a	M_b	cos ϕ	$\eta_{50\,\%}$	$\eta_{75\,\%}$	$\eta_{100\,\%}$	J [2)]	m [2)]
	[Nm]	[Nm]	[Nm]		[%]	[%]	[%]	[kgcm²]	[kg]
m500-P132M4	36.2	116	156	0.81	86.9	89.1	89.6	300	57.0
m500-P132L4	49.4	158	222	0.82	88.0	89.9	90.4	340	69.0
m500-P160M4	71.9	209	273	0.80	90.1	91.6	91.4	770	108
m500-P160L4	98.0	284	372	0.81	91.1	92.1	92.1	810	119
m500-P180M4	122	292	413	0.84	91.3	92.9	92.6	1730	157
m500-P180L4	142	413	512	0.86	92.2	93.2	93.0	1730	157
m500-P180V4 [1)]	194	600	736	0.85	92.7	93.5	93.6	2150	185
m500-P200M4	194	600	736	0.85	92.7	93.5	93.6	2150	185
m500-P225M4	240	719	839	0.81	90.9	92.8	93.9	4350	280
m500-P225L4	290	870	1015	0.83	91.7	93.2	94.2	4350	280

5.5

[1)] This motor is intended for direct mounting to a gearbox and is not available in motor design B3 or B5.
[2)] Without accessories



Rated data for 60 Hz

4-pole motors

	P_N	n_N	$U_{N,Y}$	$I_{N,Y}$	I_a/I_N
			± 5 %		
	[kW]	[r/min]	[V]	[A]	
m500-P132M4	5.50	1742	460	9.50	8.60
m500-P132L4	7.50	1742	460	13.6	8.70
m500-P160M4	11.0	1763	460	21.1	8.00
m500-P160L4	15.0	1765	460	28.3	8.00
m500-P180M4	18.5	1771	460	33.2	7.60
m500-P180L4	22.0	1773	460	39.3	7.60
m500-P180V4 [1)]	30.0	1761	460	53.1	8.00
m500-P200M4	30.0	1761	460	53.1	8.00
m500-P225M4	37.0	1773	460	70.1	7.40
m500-P225L4	45.0	1775	460	82.0	7.50

	M_N	M_a	M_b	cos ϕ	$\eta_{50\,\%}$	$\eta_{75\,\%}$	$\eta_{100\,\%}$	J [2)]	m [2)]
	[Nm]	[Nm]	[Nm]		[%]	[%]	[%]	[kgcm²]	[kg]
m500-P132M4	30.3	90.9	124	0.80	89.2	91.1	91.7	300	57.0
m500-P132L4	41.3	124	178	0.81	88.9	91.1	91.7	340	69.0
m500-P160M4	60.1	168	222	0.80	91.0	92.6	92.4	770	108
m500-P160L4	81.9	229	303	0.80	91.9	93.0	93.0	810	119
m500-P180M4	102	235	327	0.83	92.2	93.9	93.6	1730	157
m500-P180L4	119	332	415	0.85	92.7	93.8	93.6	1730	157
m500-P180V4 [1)]	161	484	597	0.84	93.1	93.9	94.1	2150	185
m500-P200M4	161	484	597	0.84	93.1	93.9	94.1	2150	185
m500-P225M4	198	574	673	0.80	91.4	93.3	94.5	4350	280
m500-P225L4	242	700	821	0.82	92.4	93.9	95.0	4350	280

[1)] This motor is intended for direct mounting to a gearbox and is not available in motor design B3 or B5.
[2)] Without accessories



Rated data for 87 Hz

4-pole motors

	P_N	n_N	M_N	M_{max}	$U_{N,\Delta}$	$I_{N,\Delta}$	cos ϕ	$\eta_{50\,\%}$	$\eta_{75\,\%}$	$\eta_{100\,\%}$	J [2]	m [2]
					± 5 %							
	[kW]	[r/min]	[Nm]	[Nm]	[V]	[A]		[%]	[%]	[%]	[kgcm²]	[kg]
m500-P132M4	9.60	2526	36.2	148	400	18.3	0.80	88.0	90.0	90.7	300	57.0
m500-P132L4	13.1	2524	49.4	206	400	25.5	0.81	88.4	90.4	91.1	340	69.0
m500-P160M4	19.2	2550	71.9	266	400	38.3	0.79	90.5	92.0	91.8	770	108
m500-P160L4	26.2	2550	98.0	354	400	51.9	0.80	91.5	92.5	92.5	810	119
m500-P180M4	32.5	2552	122	392	400	59.5	0.83	91.8	93.3	93.1	1730	157
m500-P180L4	38.1	2558	142	487	400	69.6	0.85	92.3	93.5	93.3	1730	157
m500-P180V4 [1]	52.0	2563	194	681	400	94.4	0.84	92.9	93.7	93.8	2150	185
m500-P200M4	52.0	2563	194	681	400	94.4	0.84	92.9	93.7	93.8	2150	185
m500-P225M4	64.6	2574	240	819	400	124	0.80	91.1	93.0	94.2	4350	280
m500-P225L4	78.1	2571	290	964	400	145	0.82	92.0	93.4	94.4	4350	280

[1] This motor is intended for direct mounting to a gearbox and is not available in motor design B3 or B5.
[2] Without accessories



Dimensions, self-ventilated (4-pole)

m500-P132

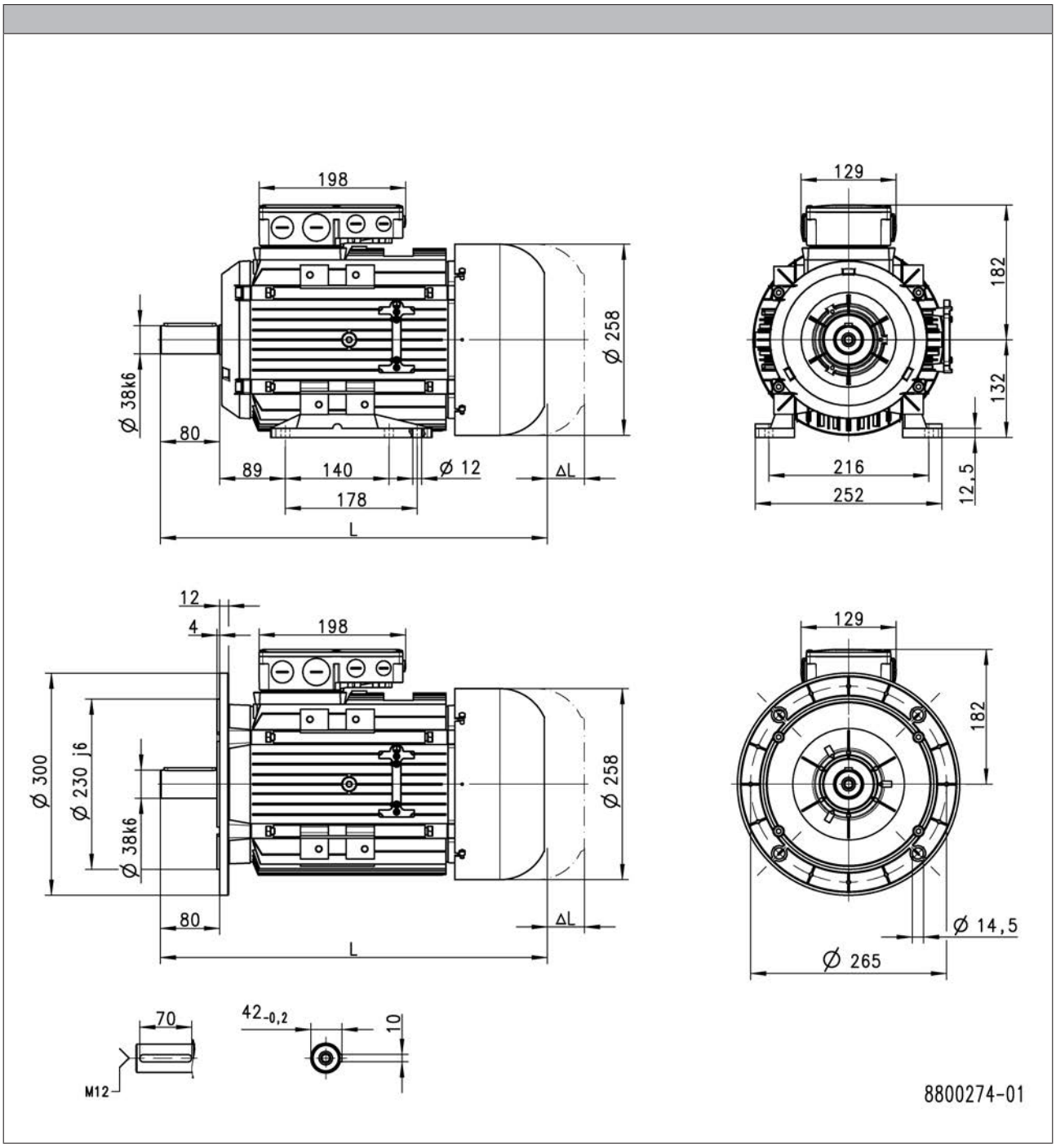

Product			m500-P132M4	m500-P132L4
Dimensions				
Motor length	L	[mm]	523	
Length of motor options	Δ L	[mm]	125	

L = length of the motor without built-on accessories
ΔL = additional length of the built-on accessories (longest type)

27 - Additional length of the built-on accessories

5.5



Dimensions, self-ventilated (4-pole)

m500-P160

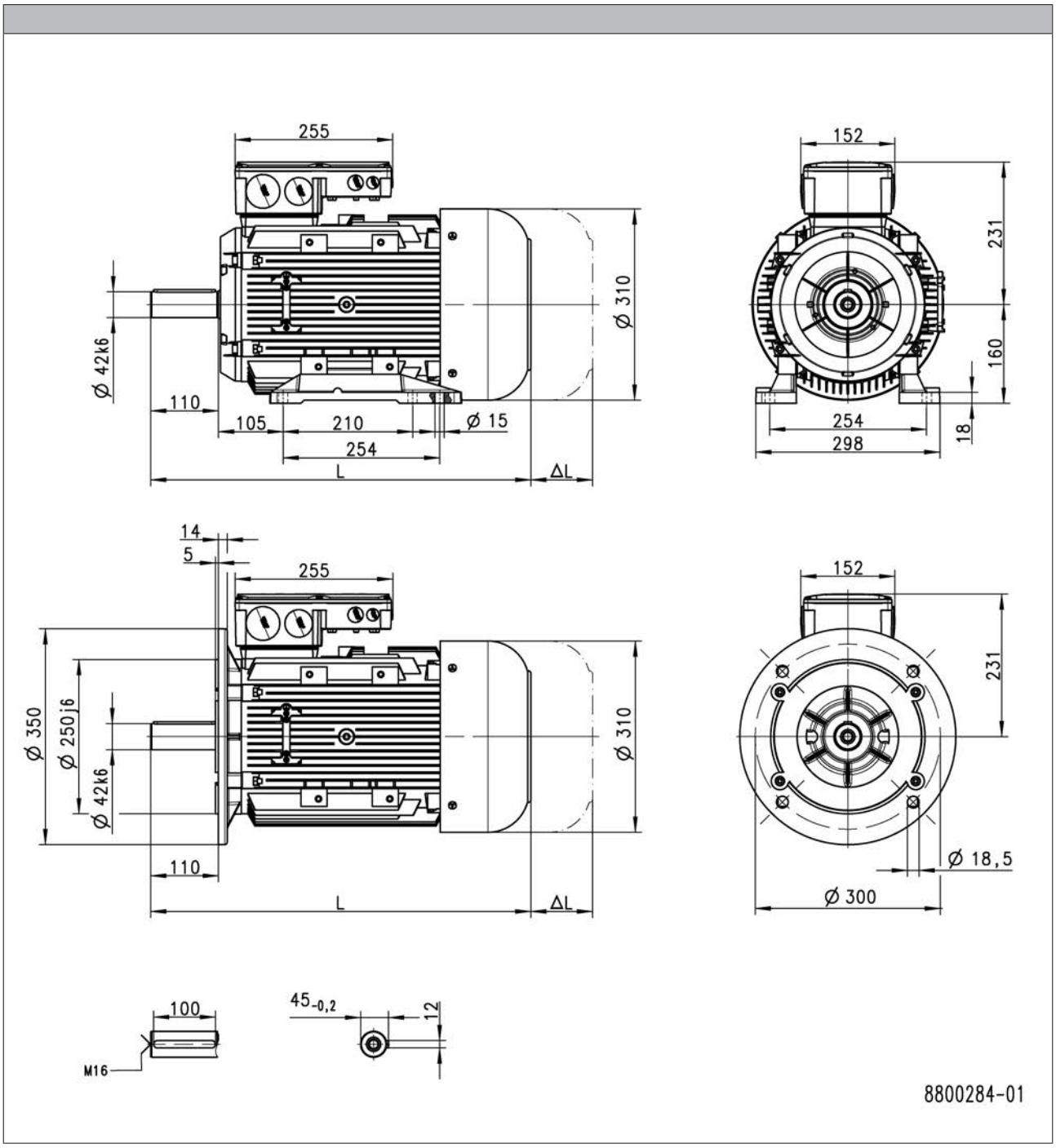

Product			m500-P160M4	m500-P160L4
Dimensions				
Motor length	L	[mm]	616	
Length of motor options	Δ L	[mm]	291	

L = length of the motor without built-on accessories
ΔL = additional length of the built-on accessories (longest type)

27 - Additional length of the built-on accessories



Dimensions, self-ventilated (4-pole)

m500-P180

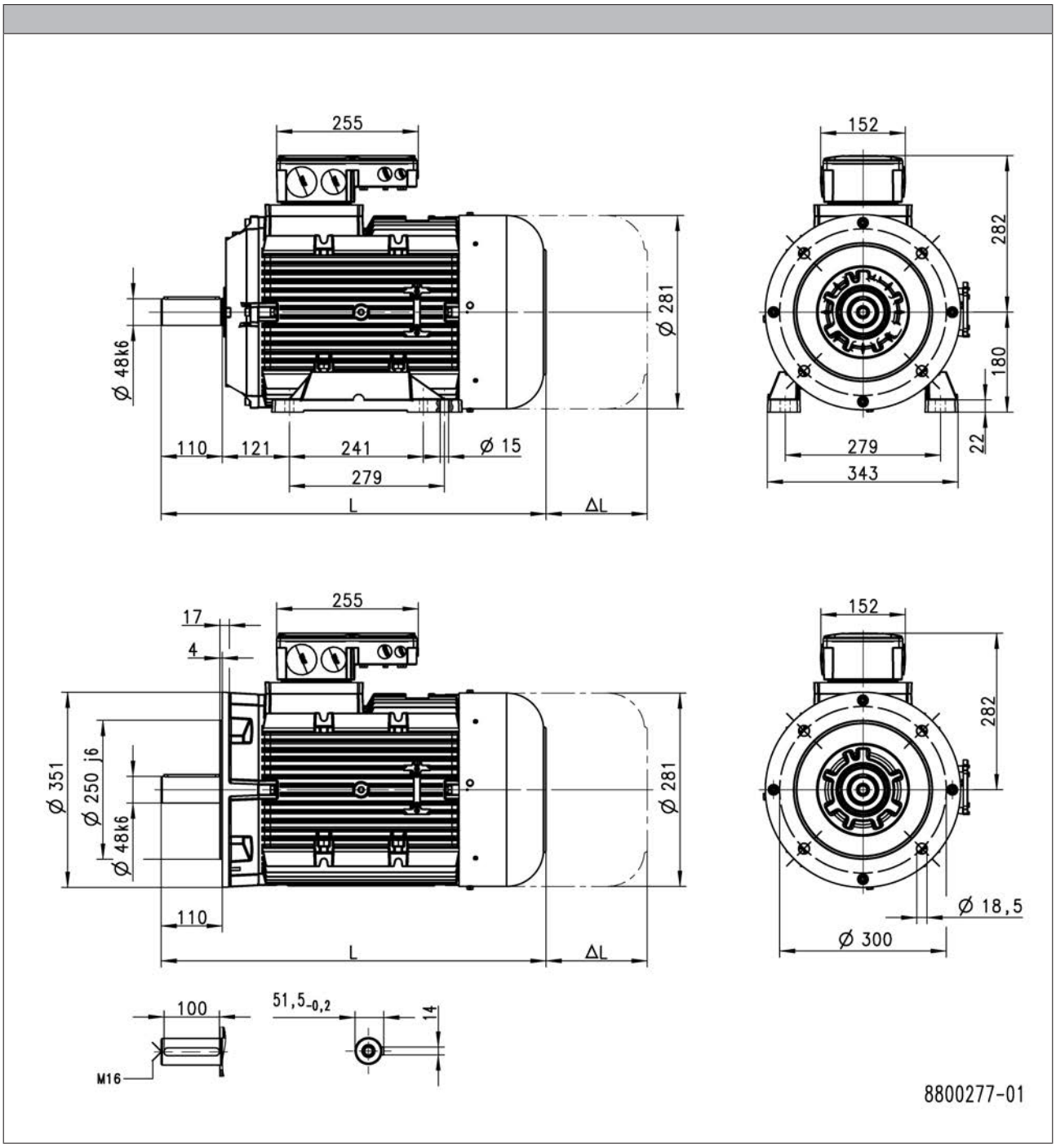

Product			m500-P180M4	m500-P180L4
Dimensions				
Motor length	L	[mm]	693	
Length of motor options	Δ L	[mm]	192	

L = length of the motor without built-on accessories
ΔL = additional length of the built-on accessories (longest type)

27 - Additional length of the built-on accessories



Dimensions, self-ventilated (4-pole)

m500-P200

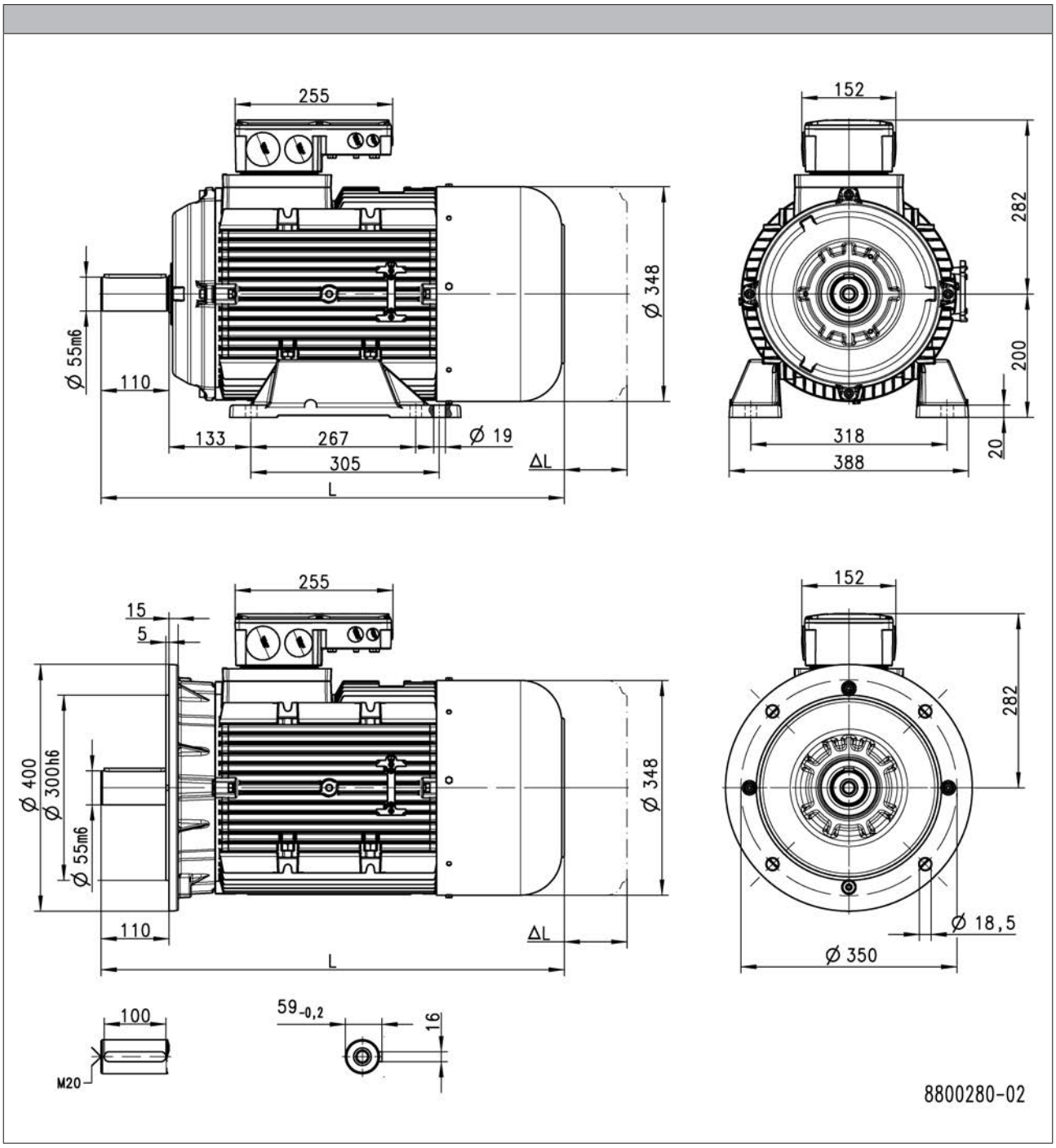

Product			m500-P200M4
Dimensions			
Motor length	L	[mm]	751
Length of motor options	Δ L	[mm]	192

L = length of the motor without built-on accessories
ΔL = additional length of the built-on accessories (longest type)

27 - Additional length of the built-on accessories



Dimensions, self-ventilated (4-pole)

m500-P225

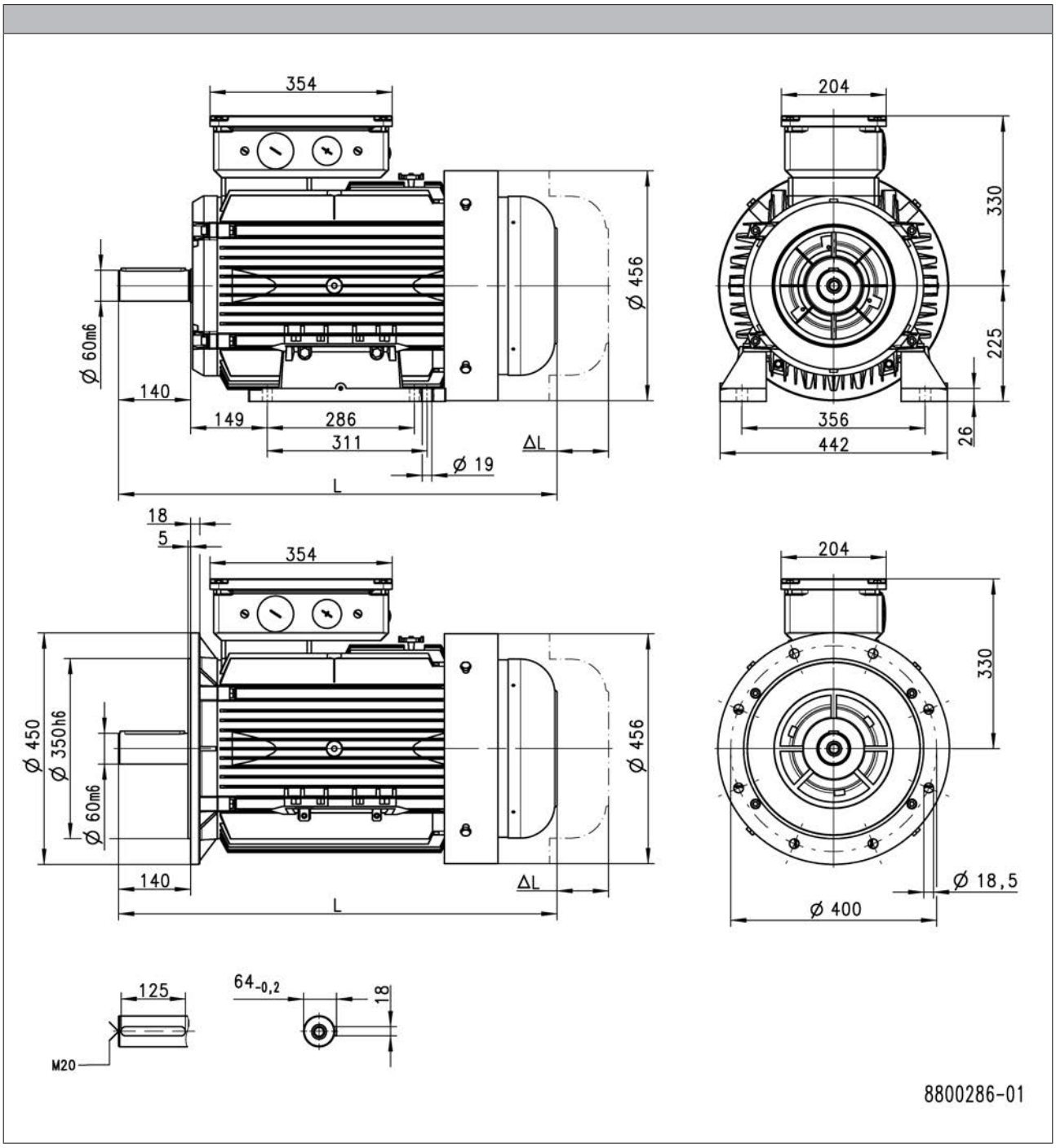

Product			m500-P225M4	m500-P225L4
Dimensions				
Motor length	L	[mm]	853	
Length of motor options	Δ L	[mm]	193	

L = length of the motor without built-on accessories
ΔL = additional length of the built-on accessories (longest type)

27 - Additional length of the built-on accessories



Dimensions, forced ventilated (4-pole)

m500-P132

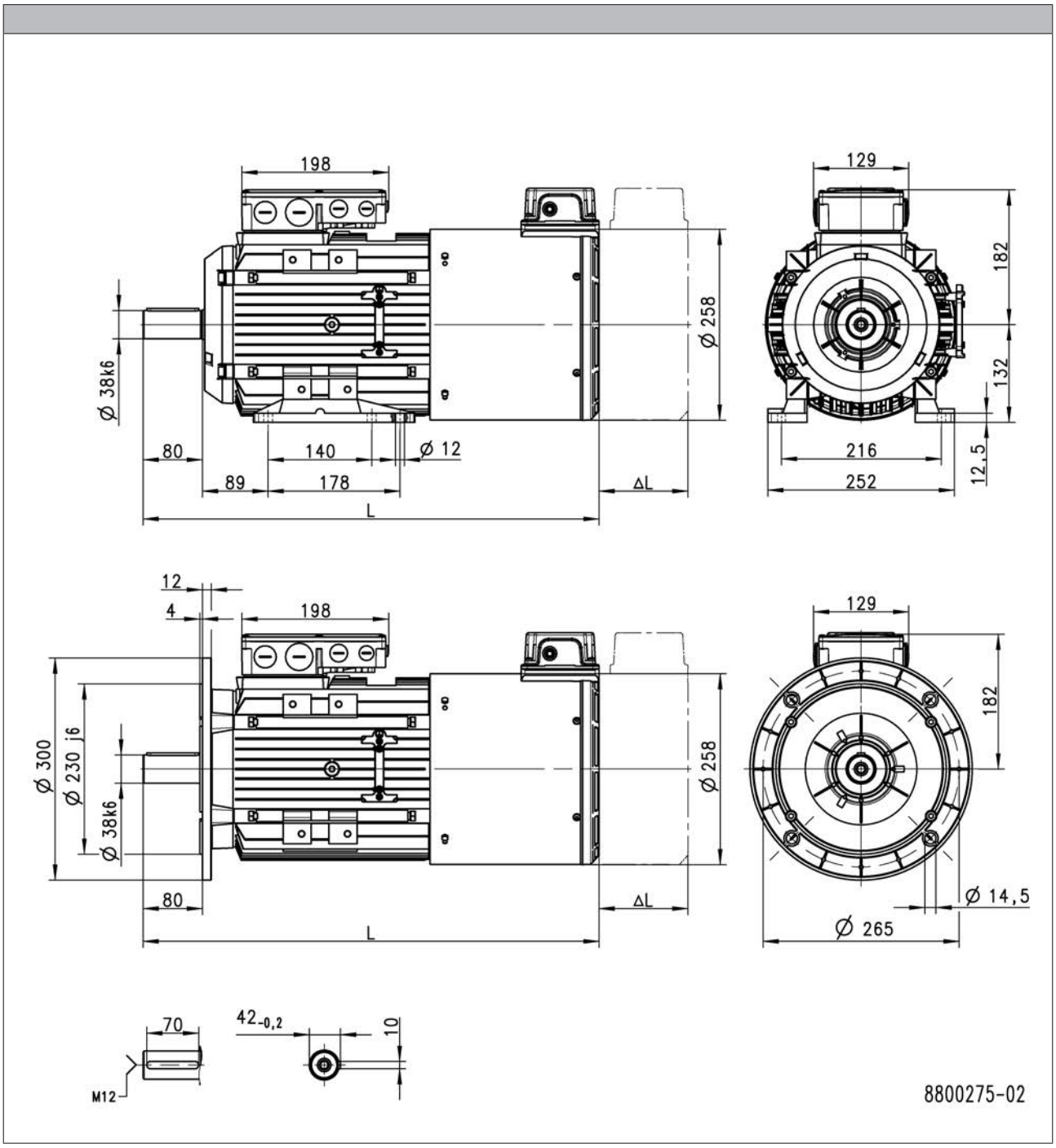

Product			m500-P132M4	m500-P132L4
Dimensions				
Motor length	L	[mm]	615	
Length of motor options	Δ L	[mm]	84.0	

L = length of the motor without built-on accessories
ΔL = additional length of the built-on accessories (longest type)

27 - Additional length of the built-on accessories



Dimensions, forced ventilated (4-pole)

m500-P160

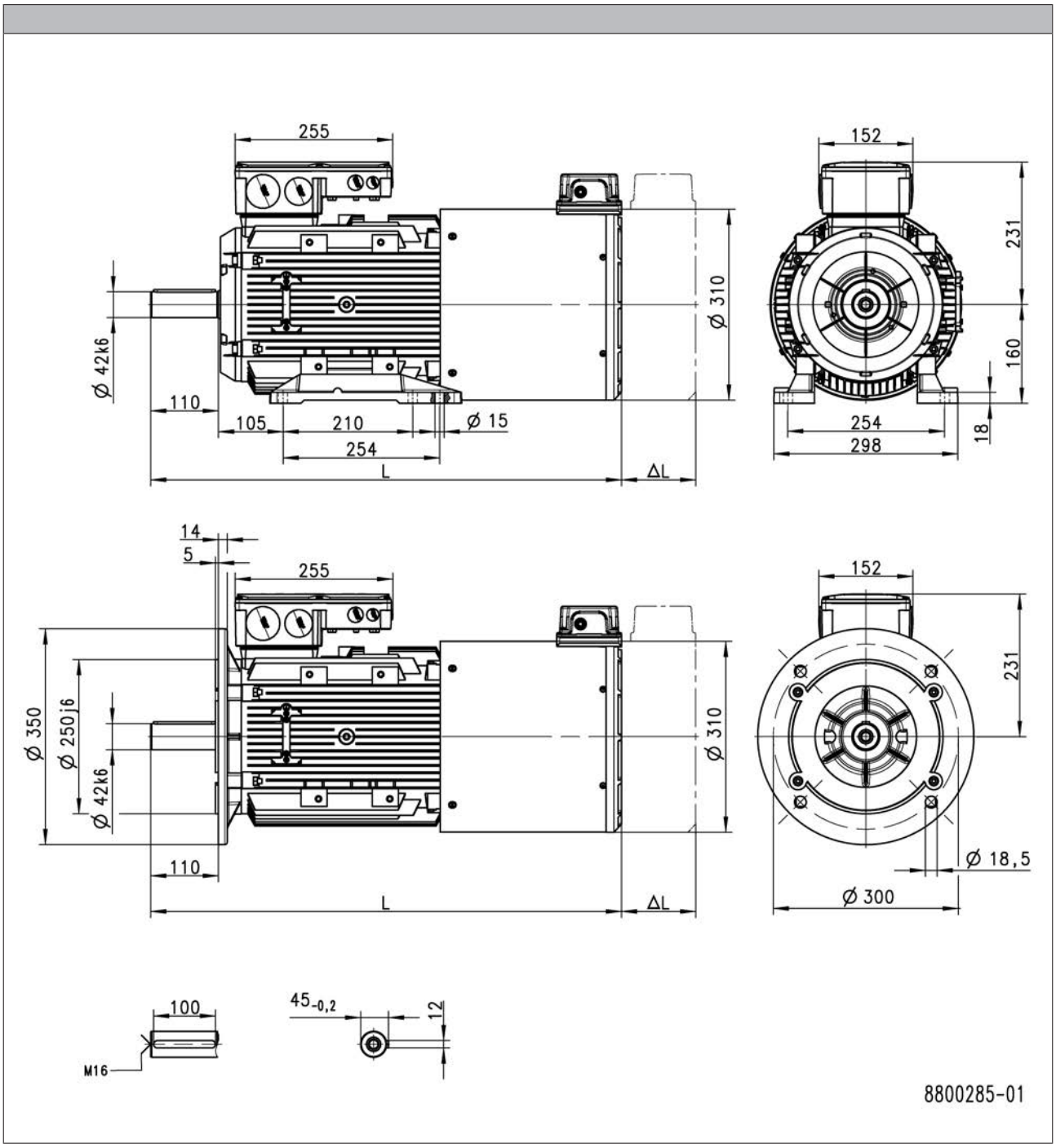

Product			m500-P160M4	m500-P160L4
Dimensions				
Motor length	L	[mm]	763	
Length of motor options	Δ L	[mm]	88.0	

L = length of the motor without built-on accessories
ΔL = additional length of the built-on accessories (longest type)

27 - Additional length of the built-on accessories

5.5



Dimensions, forced ventilated (4-pole)

m500-P180

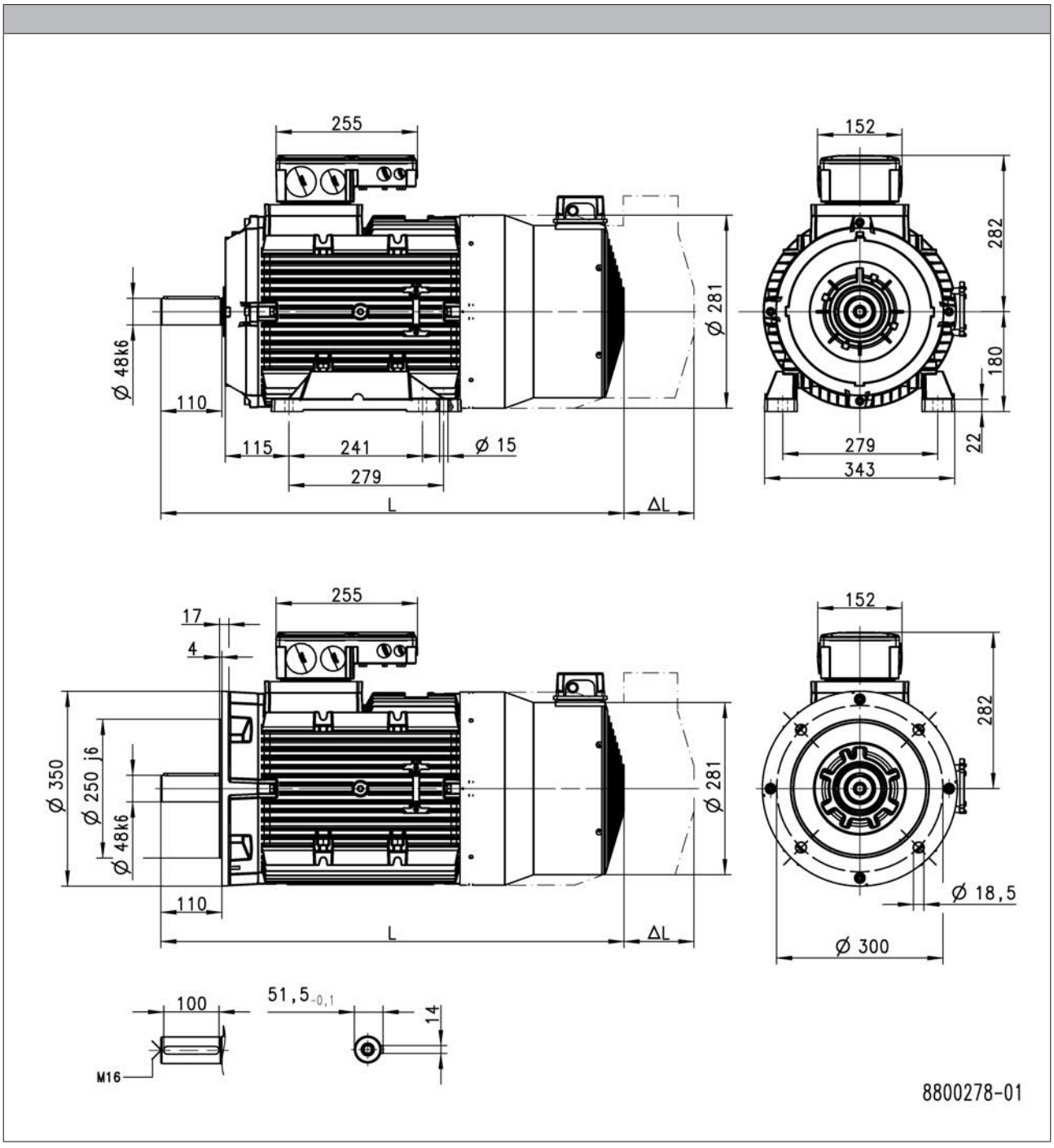

Product			m500-P180M4	m500-P180L4
Dimensions				
Motor length	L	[mm]	836	
Length of motor options	Δ L	[mm]	105	

L = length of the motor without built-on accessories
ΔL = additional length of the built-on accessories (longest type)

27 - Additional length of the built-on accessories



Dimensions, forced ventilated (4-pole)

m500-P200

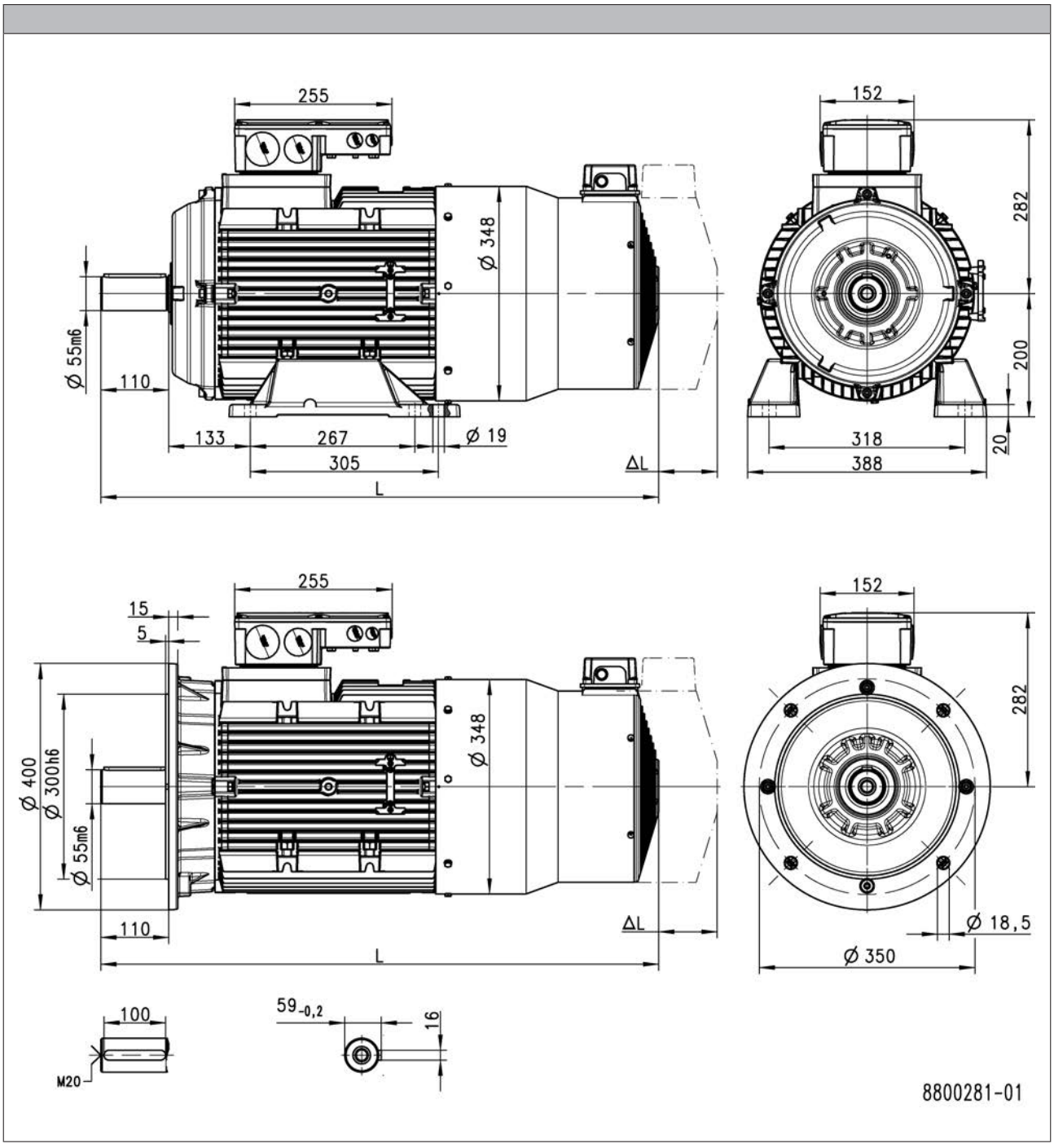

Product			m500-P200M4
Dimensions			
Motor length	L	[mm]	906
Length of motor options	Δ L	[mm]	105

L = length of the motor without built-on accessories
ΔL = additional length of the built-on accessories (longest type)

27 - Additional length of the built-on accessories

5.5



Dimensions, forced ventilated (4-pole)

m500-P225

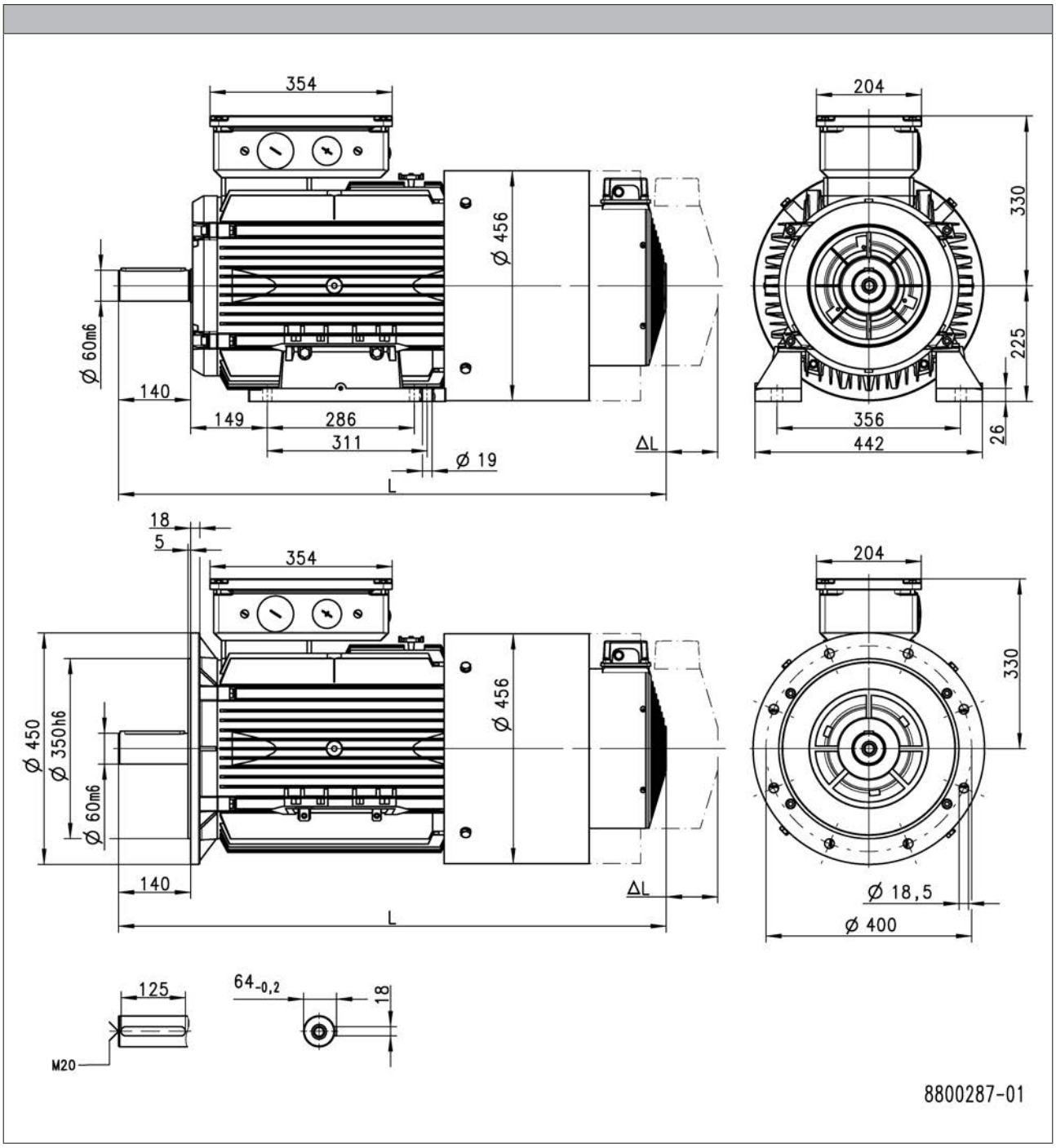

Product			m500-P225M4	m500-P225L4
Dimensions				
Motor length	L	[mm]	1065	
Length of motor options	Δ L	[mm]	0.000	

L = length of the motor without built-on accessories
ΔL = additional length of the built-on accessories (longest type)

27 - Additional length of the built-on accessories

5.5



Additional length of the built-on accessories

► The additional lengths specified also apply to geared motors.

Dimensions, self-ventilated (4-pole)

Product			m500-P132M4 m500-P132L4	m500-P160M4 m500-P160L4	m500-P180M4 m500-P180L4 m500-P180V4	m500-P200M4	m500-P225M4 m500-P225L4
			With brake				
Length of motor options	Δ L	[mm]	71.0	105	103	113	
			With feedback				
Length of motor options	Δ L	[mm]	94.0	105	79.0	78.0	79.0
			With brake + feedback				
Length of motor options	Δ L	[mm]	125	291	192		193

Dimensions, forced ventilated (4-pole)

Product			m500-P132M4 m500-P132L4	m500-P160M4 m500-P160L4	m500-P180M4 m500-P180L4 m500-P180V4	m500-P200M4	m500-P225M4 m500-P225L4
			With brake				
Length of motor options	Δ L	[mm]	84.0	30.0	62.0	60.0	0.000
			With feedback				
Length of motor options	Δ L	[mm]	84.0	30.0	62.0	105	0.000
			With brake + feedback				
Length of motor options	Δ L	[mm]	84.0	88.0	105		0.000





Surface and corrosion protection

For optimum protection of three-phase AC motors against ambient conditions, the surface and corrosion protection system (OKS) offers tailor-made solutions.

Various surface coatings ensure that the motors operate reliably even at high air humidity, in outdoor installation or in the presence of atmospheric impurities. Any colour from the RAL Classic collection can be chosen for the top coat. The three-phase AC motors are also available unpainted (no surface and corrosion protection).

Surface and corrosion protection system	Applications	Measures
OKS-G (primed)	• Dependent on subsequent top coat applied	• 2K PUR priming coat (grey)
OKS-S (small)	• Standard applications • Internal installation in heated buildings • Air humidity up to 90%	• Surface coating as per corrosivity category C1 (in line with EN 12944-2)
OKS-M (medium)	• Internal installation in non-heated buildings • Covered, protected external installation • Air humidity up to 95%	• Surface coating as per corrosivity category C2 (in line with EN 12944-2)
OKS-L (high)	• External installation • Air humidity above 95% • Chemical industry plants • Food industry	• Surface coating as per corrosivity category C3 (in line with EN 12944-2) • Blower cover and B end shield additionally primed • Screws zinc-coated • Cable glands with gaskets • Corrosion-resistant brake with cover ring, stainless friction plate, and chrome-plated armature plate (on request) Optional measures: • Motor recesses sealed off (on request)

Structure of surface coating

Surface and corrosion protection system	Corrosivity category	Surface coating	Colour
	DIN EN ISO 12944-2	Structure	
Without OKS (uncoated)			
OKS-G (primed)		2K PUR priming coat	
OKS-S (small)	Comparable to C1	2K-PUR top coat	Standard: RAL 7012 Optional: RAL Classic
OKS-M (medium)	Comparable to C2	2K PUR priming coat 2K-PUR top coat	
OKS-L (high)	Comparable to C3		



Motor connection

The IE3 three-phase AC motors m500 are intended for inverter operation; mains operation, however, is also possible.
For 50 Hz operation, the motors are to be actuated in Δ connection with 230 V or in star/delta connection with 400 V.
For 60 Hz operation, the motors are to be actuated in star/delta connection with 460 V.
For inverter operation at 87 Hz, a rated voltage of 400 V in Δ connection has been defined.

The standard connection is implemented via a terminal box. Furthermore ICN and HAN connectors are provided to quickly carry out commissioning or maintenance operations.

Overview of the connection options

Product	m500-P132M4 m500-P132L4	m500-P160M4 m500-P160L4	m500-P180M4 m500-P180L4 m500-P180V4	m500-P200M4	m500-P225M4 m500-P225L4
Power connection/brake connection					
Terminal box	●	●	●	●	●
ICN connector	●				
HAN modular connector	●	●			
Feedback connection					
Terminal box	●	●	●	●	●
ICN connector	●	●	●	●	●
Blower connection					
Terminal box	●	●	●	●	●
ICN connector	●	●	●	●	●
Thermal sensor connection					
Terminal box	●	●	●	●	●
ICN connector	●	●			
HAN modular connector	●	●			



Connection via terminal box

The connection in the terminal box is implemented by means of conventional cable glands.

Cable entries

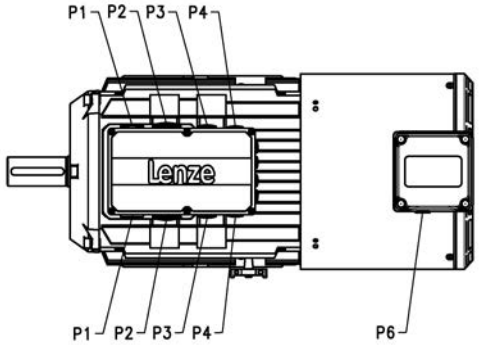

Product	Dimensions				
	P_1	P_2	P_3	P_4	P_6
	[mm]	[mm]	[mm]	[mm]	[mm]
m500-P132M4	M25x1.5	M32x1.5	M20x1.5	M16x1.5	M16x1.5
m500-P132L4					
m500-P160M4	M50x1.5	M40x1.5			
m500-P160L4					
m500-P180M4					
m500-P180L4					
m500-P180V4					
m500-P200M4					
m500-P225M4	M12x1.5	M63x1.5		M12x1.5	
m500-P225L4					



Connections via ICN connectors

A connector is used for the power connection, connection of the brake, and the temperature monitoring connection.
The feedback and blower connections are implemented via a separate connector in each case.

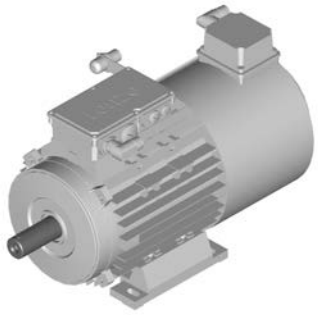

Connection for power, brake and temperature monitoring

For the power connection of the connector, a max. rated motor current of 16 A is permissible.
The connectors can be rotated by 270° and are equipped with a bayonet catch for SpeedTec connectors. As the connector fixing is also compatible with conventional box nuts, existing mating connectors can still be used without difficulty. The motor connection is determined in the terminal box.



► ICN 6-pole

No connection of temperature monitoring possible!

5.5

Pin assignment			
Contact	Designation	Meaning	
1	BD1 / BA1	Brake +/AC	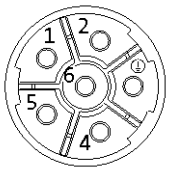
2	BD2 / BA2	Brake -/AC	
PE	PE	PE conductor	
4	U	Phase U power	
5	V	Phase V power	
6	W	Phase W power	

► ICN 8-pole

Pin assignment			
Contact	Designation	Meaning	
1	U	Phase U power	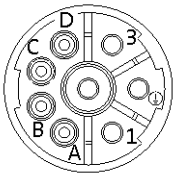
PE	PE	PE conductor	
3	V	Phase V power	
4	W	Phase W power	
A	TB1 / TP1 / R1	Thermal sensor: TKO/PTC/ +KTY	
B	TB2 / TP2 / R2	Thermal sensor: TKO/PTC/-KTY	
C	BD1 / BA1	Brake +/AC	
D	BD2 / BA2	Brake -/AC	



Connections via ICN connectors

Connection for power, brake and temperature monitoring

For IEC standard motors, the position of the connector can be selected.

For geared motors, the position of the connector must be selected as a function of the terminal box position.

Position of the connector for IEC standard motors

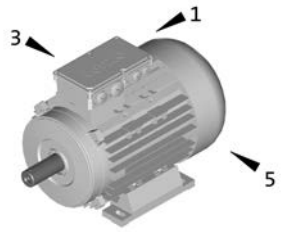

Possible connection position	3/5*

Position of the connector for geared motors

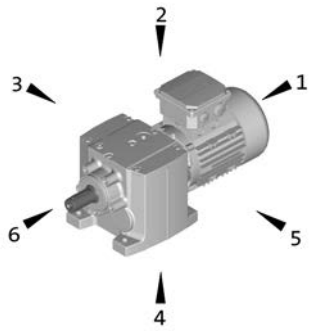

Terminal box position	2	3	4	5
Possible connection position	3/5*	2*/4	3*/5	2/4*

► If preferred positions are not specified in the order, the connector will be positioned as indicated by * on the diagram below.



Connections via ICN connectors

Blower connection

The blower is also optionally available with an ICN connector fixed to the terminal box of the blower for exceptionally fast commissioning. The connectors are fitted with a bayonet fixing, which is also compatible with conventional union nuts. Existing counter plugs can therefore continue to be used without difficulty.

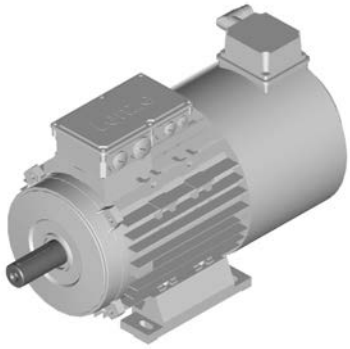

For the blower, the terminal box cover including the connector can be rotated by 90 ° step by step, if required.

► Blower 1-ph

Pin assignment			
Contact	Designation	Meaning	
PE	PE	PE conductor	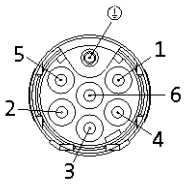
1	U1	Fan	
2	U2		
3		Not assigned	
4			
5			
6			

► Blower 3-ph

Pin assignment			
Contact	Designation	Meaning	
PE	PE	PE conductor	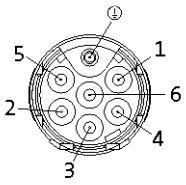
1	U	Phase U power	
2		Not assigned	
3	V	Phase V power	
4		Not assigned	
5			
6	W	Phase W power	



Connections via ICN connectors

Feedback connection

All encoder systems (apart from IG128-24V-H) are also available with an ICN connector fixed to the motor terminal box for exceptionally fast commissioning. The connectors are fitted with a bayonet fixing, which is also compatible with conventional union nuts. Existing mating connectors can therefore continue to be used without difficulty.
The feedback connector is located on the terminal box side opposite to the power connection



► Resolver

Pin assignment			
Contact	Designation	Meaning	
1	+Ref	Transformer windings	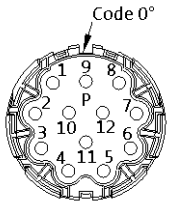
2	-Ref		
3	+VCC ETS	Supply: Electronic nameplate	
4	+COS	Cosine stator windings	
5	-COS		
6	+SIN	Sine stator windings	
7	-SIN		
8		Not assigned	
9			
10			
11	+KTY	KTY temperature sensor	
12	-KTY		

► Hiperface incremental encoder and SinCos absolute value encoder

Pin assignment			
Contact	Designation	Meaning	
1	B	Track B/+SIN	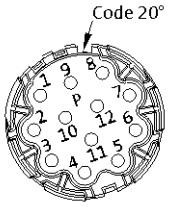
2	A^-	Track A inverse/-COS	
3	A	Track A/+COS	
4	$+U_B$	Supply +	
5	GND	Mass	
6	Z^-	Zero track inverse/-RS485	
7	Z	Zero track/+RS485	
8		Not assigned	
9	B^-	Track B inverse/-SIN	
10		Not assigned	
11	+KTY	KTY temperature sensor	
12	-KTY		



Connection via M12 connector

IG128-24V-H incremental encoder connection

As a standard this incremental encoder is equipped with a connection cable of about 0.5 m length and with a common industry standard M12 connector at its end.

Pin assignment			
Contact	Designation	Meaning	
1	$+U_B$	Supply +	
2	B	Track B	
3	GND	Mass	
4	A	Track A	



Connections via HAN connectors

HAN modular

The connector is available with two different power modules (16 A or 40 A), depending on the rated motor current. The motor connection is determined in the terminal box and must be checked before commissioning.

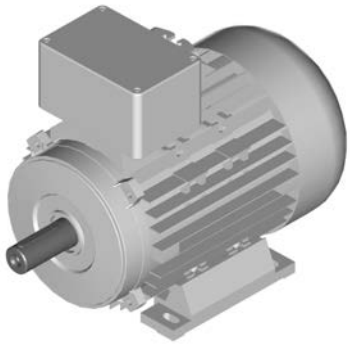

► HAN modular 16 A

Pin assignment			
Module	Contact	Meaning	
A	1	Terminal board: U1	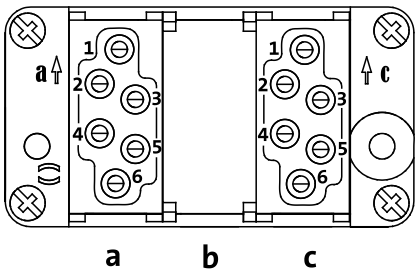
	2	Terminal board: V1	
	3	Terminal board: W1	
B		Dummy module	
C	1	Thermal sensor: +KTY/PTC/TKO	
	2	Brake +/AC	
	3	Brake -/AC	
	4	Rectifier: Switching contact	
	5		
	6	Thermal sensor: KTY/PTC/TKO	

► HAN modular 40 A

Pin assignment			
Module	Contact	Meaning	
A	1	Terminal board: U1	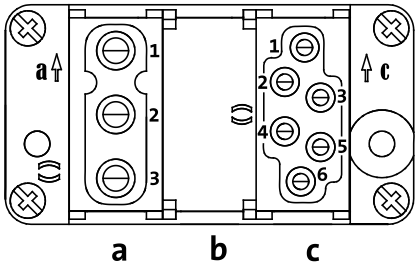
	2	Terminal board: V1	
	3	Terminal board: W1	
B		Dummy module	
C	1	Thermal sensor: +KTY/PTC/TKO	
	2	Brake +/AC	
	3	Brake -/AC	
	4	Rectifier: Switching contact	
	5		
	6	Thermal sensor: KTY/PTC/TKO	



Connections via HAN connectors

For IEC standard motors, the position of the cable entry can be selected.

Position of the cable entry for IEC standard motors

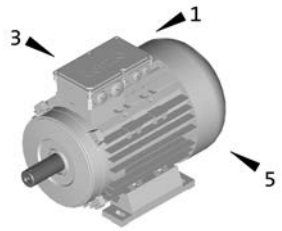

Possible cable entry position	1*/3/5

For geared motors, the position of the cable entry must be selected as a function of the terminal box position.

Position of the cable entry for geared motors

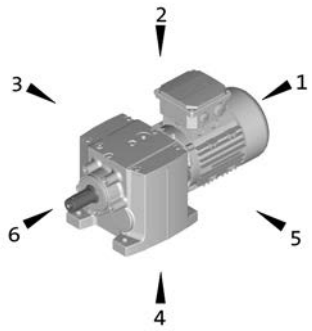

Terminal box position	2	3	4	5
Possible cable entry position	1*/3/5	1*/2/4	1*/3/5	1*/2/4

► If preferred positions are not specified in the order, the cable entry will be positioned as indicated by * on the diagram below.





Spring-applied brake

The three-phase AC motors can be equipped with a spring-applied brake which is active when the supply voltage has been switched off (closed-circuit principle). In the deenergised state, the brake is applied. This prevents possible movement of the motor shaft with regard to the load after switch-off or in the event of a power failure.
For optimum adaptation of the brake motor to the application, several brake sizes and control variants are provided for each motor.

Types
- **Standard**
  - 1 x 10^6 repeating switching cycles
  - 1 x 10^6 reversing switching cycles

Control
- DC supply
- AC supply via rectifiers in the terminal box

Enclosure
- Without manual release IP55
- With manual release IP54

Friction lining
- Asbestos-free, low-wear

Options
- Manual release
- Low noise

Braking torques

In addition to the standard braking torque, depending on the brake size, the possibility of choosing between a reduced and an increased braking torque is provided.
- When the braking torque is reduced, great wear reserves can be attained. This is enabled by a reduction of the spring rate.
- In order to obtain a greater braking torque, the spring rate is increased. This is practical, for instance, for hoists, since here the gravity acts as an additional acceleration in the negative direction.

Manual release

By actuating the manual release lever, the brake can be released manually during operation at zero current. Manual release facilitates positioning and maintenance work.



Spring-applied brake

Direct connection without rectifier

If the brake is activated directly without a rectifier, a freewheeling diode or a spark suppressor is required for protection against induction peaks.

- Supply voltages
  DC 24 V

Connection via mains voltage with brake rectifier

If the brake is not directly supplied with DC voltage, a rectifier is required. This is included in the scope of supply and is located in the terminal box of the motor. The rectifier converts the AC voltage of the connection into DC voltage. The following rectifiers are available:

Half-wave rectifier, 6-pole

- Supply voltage / brake coil voltage ratio = 2.22
- Approved by UL / CSA
- Supply voltages
  AC 400 V
  AC 460 V



Bridge rectifier, 6-pole

- Ratio of supply voltage to brake coil voltage = 1.11
- Supply voltage
  AC 230 V



Bridge/half-wave rectifier, 6-pole

- Supply voltage / brake coil voltage ratio
  up to the overexcitation time = 1.11
  From the overexcitation time = 2.22
- Supply voltages
  AC 230 V
  AC 400 V





Spring-applied brake

Assignment of 4-pole motors and brakes

Product	Size	Rated torque
	Brake	
		M_k
		[Nm]
m500-P132M4	14 14 16 16	35.0 60.0 60.0 80.0
m500-P132L4	14 14 16 16 16	35.0 60.0 60.0 80.0 100
m500-P160M4	16 16 18 18	60.0 80.0 80.0 150
m500-P160L4	18 18 18	80.0 150 200
m500-P180M4	18 18 20 20	80.0 150 145 260
m500-P180L4	18 18 20 20 20	80.0 150 145 260 315
m500-P180V4	18 18 20 20 20 20	80.0 150 145 260 315 400
m500-P200M4	18 18 20 20 20 20	80.0 150 145 260 315 400
m500-P225M4	25 25 25	265 400 490
m500-P225L4	25 25 25 25	265 400 490 600



Spring-applied brake

Permissible friction energy

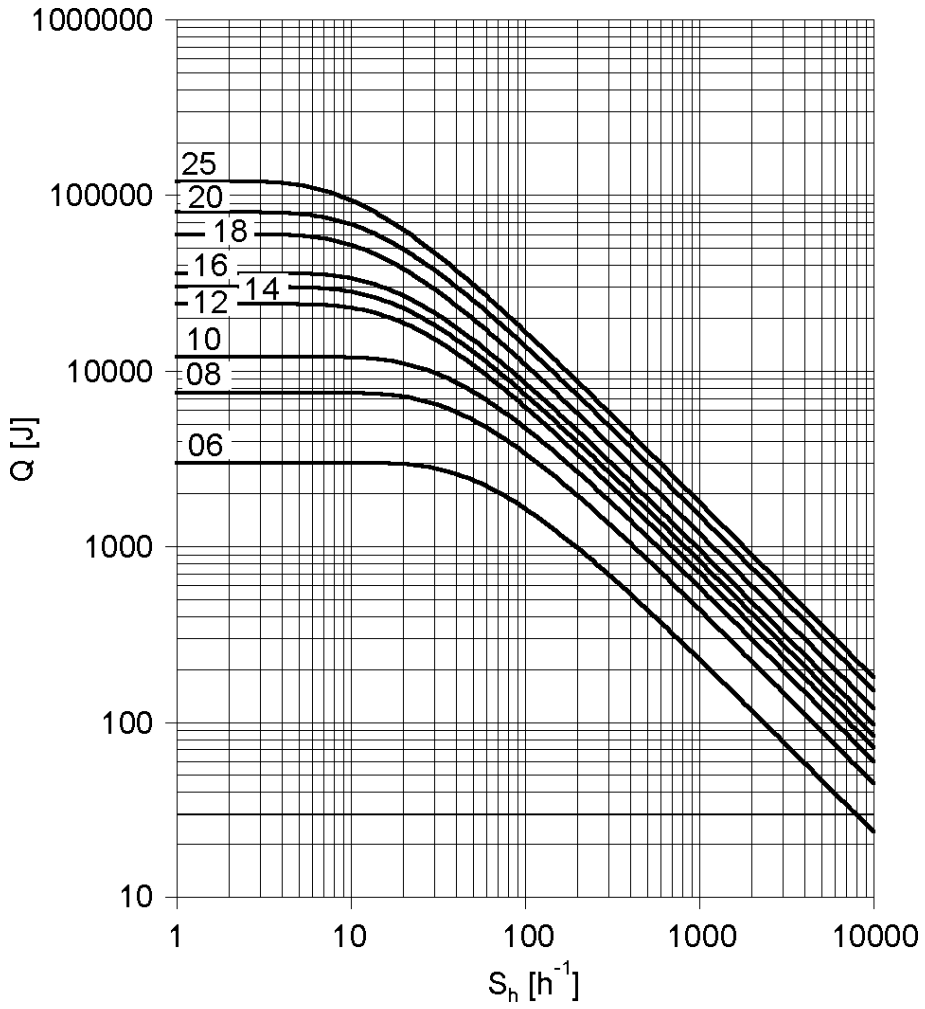

Q =Switching energy per switching cycle
S_h =Operating frequency
Brake size = 06 to 25



Spring-applied brake

Rated data with reduced braking torque

► Please enquire for braking torques and maximum switching work values not listed here.

Size			06	08	10	12	14	16	18	20	25
Power input											
	P_{in}	[kW]	0.020	0.025	0.030	0.040	0.050	0.055	0.085	0.10	0.11
Braking torque											
100	M_B	[Nm]	2.50	3.50	7.00	14.0	35.0	60.0	80.0	145	265
1000	M_B	[Nm]	2.30	3.10	6.10	12.0	30.0	50.0	65.0	115	203
1200	M_B	[Nm]	2.30	3.10	6.00	12.0	29.0	48.0	63.0	112	199
1500	M_B	[Nm]	2.20	3.00	5.80	11.0	28.0	47.0	61.0	109 [1)]	193 [1)]
1800	M_B	[Nm]	2.10	2.90	5.70	11.0	28.0	46.0	60.0 [1)]		
3000	M_B	[Nm]	2.00	2.80	5.30	10.0	26.0 [1)]	43.0 [1)]			
3600	M_B	[Nm]	2.00	2.70	5.20	10.0 [1)]					
Maximum switching energy											
100	Q_E	[KJ]	3.00	7.50	12.0	24.0	30.0	36.0	60.0	80.0	120
1000	Q_E	[KJ]	3.00	7.50	12.0	24.0	30.0	36.0	60.0	80.0	120
1200	Q_E	[KJ]	3.00	7.50	12.0	24.0	30.0	36.0	60.0	80.0	120
1500	Q_E	[KJ]	3.00	7.50	12.0	24.0	30.0	36.0	60.0	24.0 [1)]	36.0 [1)]
1800	Q_E	[KJ]	3.00	7.50	12.0	24.0	30.0	36.0	36.0 [1)]		
3000	Q_E	[KJ]	3.00	7.50	12.0	24.0	18.0 [1)]	11.0 [1)]			
3600	Q_E	[KJ]	3.00	7.50	12.0	7.00 [1)]					
Transition operating frequency											
	$S_{hü}$	[1/h]	79.0	50.0	40.0	30.0	28.0	27.0	20.0	19.0	15.0
Moment of inertia											
	J	[kgcm²]	0.015	0.061	0.20	0.45	0.63	1.50	2.90	7.30	20.0
Mass											
	m	[kg]	0.90	1.50	2.60	4.20	5.80	8.70	12.6	19.5	31.0

[1)] In the region of the load limit the value for friction energy Q_{BW} can be reduced to 40 %.



Spring-applied brake

Rated data with reduced braking torque

► Activation via half-wave or bridge rectifier

Size			06	08	10	12	14	16	18	20	25
Friction energy											
	Q_{BW}	[MJ]	113	210	264	706	761	966	1542	2322	3522
Delay time											
Engaging	t_{11}	[ms]	11.0	14.0	20.0	21.0	37.0	53.0	32.0	47.0	264
Rise time											
Braking torque	t_{12}	[ms]	13.0	10.0	17.0	19.0	22.0	30.0	20.0	100	120
Engagement time											
	t_1	[ms]	24.0		37.0	40.0	59.0	83.0	52.0	147	384
Disengagement time											
	t_2	[ms]	35.0	37.0	57.0	65.0	148	169	230	207	269

► Activation via bridge/half-wave rectifier

Design			Holding current reduction (cold brake)								
Size			06	08	10	12	14	16	18	20	25
Friction energy											
	Q_{BW}	[MJ]	113	210	264	706	761	966	1542	2322	3522
Overexcitation time											
	$t_{ü}$	[ms]	300				1300				
Min. rest time											
	t	[ms]	900				3900				
Delay time											
Engaging	t_{11}	[ms]	12.0	22.0	35.0	49.0	61.0	114	83.0	126	304
Rise time											
Braking torque	t_{12}	[ms]	14.0	16.0	30.0	45.0	37.0	65.0	52.0	269	138
Engagement time											
	t_1	[ms]	26.0	38.0	66.0	93.0	97.0	180	134	395	443
Disengagement time											
	t_2	[ms]	35.0	37.0	57.0	65.0	148	169	230	207	269

► The brake response and application times are guide values. The engagement time is 10 times longer with AC-side switching. With the maximum air gap the disengagement time t_2 – depending on the brake and control – is up to 4 times longer than the disengagement time with the rated air gap.



Spring-applied brake

Rated data with standard braking torque

► Please enquire for braking torques and maximum switching work values not listed here.

Size			06	08	10	12	14	16	18	20	25
Power input											
	P_{in}	[kW]	0.020	0.025	0.030	0.040	0.050	0.055	0.085	0.10	0.11
Braking torque											
100	M_B	[Nm]	4.00	8.00	16.0	32.0	60.0	80.0	150	260	400
1000	M_B	[Nm]	3.70	7.20	14.0	27.0	51.0	66.0	121	206	307
1200	M_B	[Nm]	3.60	7.00	14.0	27.0	50.0	65.0	118	201	300
1500	M_B	[Nm]	3.50	6.80	13.0	26.0	48.0	63.0	115	195 [1)]	291 [1)]
1800	M_B	[Nm]	3.40	6.70	13.0	26.0	47.0	61.0	112 [1)]		
3000	M_B	[Nm]	3.20	6.30	12.0	24.0	44.0 [1)]	57.0 [1)]			
3600	M_B	[Nm]	3.20	6.10	12.0	23.0 [1)]					
Maximum switching energy											
100	Q_E	[KJ]	3.00	7.50	12.0	24.0	30.0	36.0	60.0	80.0	120
1000	Q_E	[KJ]	3.00	7.50	12.0	24.0	30.0	36.0	60.0	80.0	120
1200	Q_E	[KJ]	3.00	7.50	12.0	24.0	30.0	36.0	60.0	80.0	120
1500	Q_E	[KJ]	3.00	7.50	12.0	24.0	30.0	36.0	60.0	24.0 [1)]	36.0 [1)]
1800	Q_E	[KJ]	3.00	7.50	12.0	24.0	30.0	36.0	36.0 [1)]		
3000	Q_E	[KJ]	3.00	7.50	12.0	24.0	18.0 [1)]	11.0 [1)]			
3600	Q_E	[KJ]	3.00	7.50	12.0	7.00 [1)]					
Transition operating frequency											
	$S_{hü}$	[1/h]	79.0	50.0	40.0	30.0	28.0	27.0	20.0	19.0	15.0
Moment of inertia											
	J	[kgcm²]	0.015	0.061	0.20	0.45	0.63	1.50	2.90	7.30	20.0
Mass											
	m	[kg]	0.90	1.50	2.60	4.20	5.80	8.70	12.6	19.5	31.0

[1)] In the region of the load limit the value for friction energy Q_{BW} can be reduced to 40 %.



Spring-applied brake

Rated data with standard braking torque

► Activation via half-wave or bridge rectifier

Size			06	08	10	12	14	16	18	20	25
Friction energy											
	Q_{BW}	[MJ]	85.0	158	264	530	571	966	1542	2322	3522
Delay time											
Engaging	t_{11}	[ms]	15.0		28.0		17.0	27.0	33.0	65.0	110
Rise time											
Braking torque	t_{12}	[ms]	13.0	16.0	19.0	25.0		30.0	45.0	100	120
Engagement time											
	t_1	[ms]	28.0	31.0	47.0	53.0	42.0	57.0	78.0	165	230
Disengagement time											
	t_2	[ms]	45.0	57.0	76.0	115	210	220	270	340	390

► Activation via bridge/half-wave rectifier

Design			Holding current reduction (cold brake)								
Size			06	08	10	12	14	16	18	20	25
Friction energy											
	Q_{BW}	[MJ]	85.0	158	264	530	571	966	1542	2322	3522
Overexcitation time											
	$t_{ü}$	[ms]	300				1300				
Min. rest time											
	t	[ms]	900				3900				
Delay time											
Engaging	t_{11}	[ms]	16.0	25.0	31.0	48.0	33.0	58.0	80.0	102	154
Rise time											
Braking torque	t_{12}	[ms]	14.0	27.0	21.0	43.0	49.0	64.0	109	157	168
Engagement time											
	t_1	[ms]	30.0	52.0		90.0	82.0	122	189	259	322
Disengagement time											
	t_2	[ms]	45.0	57.0	76.0	115	210	220	270	340	390

► The brake response and application times are guide values. The engagement time is 10 times longer with AC-side switching. With the maximum air gap the disengagement time t_2 – depending on the brake and control – is up to 4 times longer than the disengagement time with the rated air gap.



Spring-applied brake

Rated data with increased braking torque

► Please enquire for braking torques and maximum switching work values not listed here.

Size			10	12	14	16	16	18	20	20	25	25
Power input												
	P_{in}	[kW]	0.030	0.040	0.050	0.055	0.055	0.085	0.10	0.10	0.11	0.11
Braking torque												
100	M_B	[Nm]	23.0	46.0	75.0	100	125	200	315	400	490	600
1000	M_B	[Nm]	20.0	39.0	64.0	83.0	103	162	249	317	376	461
1200	M_B	[Nm]	20.0	39.0	62.0	81.0	101	158	244	309	367	449
1500	M_B	[Nm]	19.0	38.0	60.0	78.0	98.0	153	237 [1]	300 [1]	356 [1]	436 [1]
1800	M_B	[Nm]	19.0	37.0	59.0	77.0	96.0	150 [1]				
3000	M_B	[Nm]	17.0	34.0	55.0 [1]	71.0 [1]	89.0 [1]					
3600	M_B	[Nm]	17.0	33.0 [1]								
Maximum switching energy												
100	Q_E	[KJ]	12.0	24.0	30.0	36.0	36.0	60.0	80.0	80.0	120	120
1000	Q_E	[KJ]	12.0	24.0	30.0	36.0	36.0	60.0	80.0	80.0	120	120
1200	Q_E	[KJ]	12.0	24.0	30.0	36.0	36.0	60.0	80.0	80.0	120	120
1500	Q_E	[KJ]	12.0	24.0	30.0	36.0	36.0	60.0	24.0 [1]	24.0 [1]	36.0 [1]	36.0 [1]
1800	Q_E	[KJ]	12.0	24.0	30.0	36.0	36.0	36.0 [1]				
3000	Q_E	[KJ]	12.0	24.0	18.0 [1]	11.0 [1]	11.0 [1]					
3600	Q_E	[KJ]	12.0	7.00 [1]								
Transition operating frequency												
	$S_{hü}$	[1/h]	40.0	30.0	28.0	27.0	27.0	20.0	19.0	19.0	15.0	15.0
Moment of inertia												
	J	[kgcm²]	0.20	0.45	0.63	1.50	1.50	2.90	7.30	7.30	20.0	20.0
Mass												
	m	[kg]	2.60	4.20	5.80	8.70	8.70	12.6	19.5	19.5	31.0	31.0

[1] In the region of the load limit the value for friction energy Q_{BW} can be reduced to 40 %.

► Activation via half-wave or bridge rectifier

Size			10	12	14	16		18	20		25	
Friction energy												
	Q_{BW}	[MJ]	198	353	253	563	241	578	1596	580	2465	1409
Delay time												
Engaging	t_{11}	[ms]	10.0	16.0	11.0	22.0	17.0	24.0	46.0	17.0	77.0	38.0
Rise time												
Braking torque	t_{12}	[ms]	19.0	25.0		30.0		45.0	100		120	
Engagement time												
	t_1	[ms]	29.0	41.0	36.0	52.0	47.0	69.0	146	117	197	158
Disengagement time												
	t_2	[ms]	109	193	308	297	435	356	378	470	451	532



Spring-applied brake

Rated data with increased braking torque

► Activation via bridge/half-wave rectifier

Design			Holding current reduction (cold brake)									
Size			10	12	14	16		18	20		25	
Friction energy	Q_{BW}	[MJ]	198	353	253	563	241	578	1596	580	2465	1409
Overexcitation time	$t_{ü}$	[ms]	300			1300						
Min. rest time	t	[ms]	900			3900						
Delay time												
Engaging	t_{11}	[ms]	24.0	27.0	17.0	41.0	21.0	60.0	69.0	17.0	123	85.0
Rise time												
Braking torque	t_{12}	[ms]	44.0	43.0	37.0	55.0	37.0	113	148	100	190	270
Engagement time	t_1	[ms]	68.0	70.0	54.0	97.0	57.0	173	217	334	313	355
Disengagement time	t_2	[ms]	109	193	308	297	435	356	378	470	451	532

Design			Over-excitation									
Size			10	12	14	16		18	20		25	
Friction energy	Q_{BW}	[MJ]	264	706	761	966		1542	2322		3522	
Overexcitation time	$t_{ü}$	[ms]	300			1300						
Min. rest time	t	[ms]	900			3900						
Delay time												
Engaging	t_{11}	[ms]	29.0	54.0	31.0	70.0	46.0	86.0	103	55.0	171	135
Rise time												
Braking torque	t_{12}	[ms]	53.0	87.0	68.0	93.0	83.0	160	222	319	266	430
Engagement time	t_1	[ms]	82.0	141	99.0	163	129	246	325	374	437	565
Disengagement time	t_2	[ms]	53.0	81.0	117	141	168	151	160	167	184	204

► The brake response and application times are guide values. The engagement time is 10 times longer with AC-side switching. With the maximum air gap the disengagement time t_2 – depending on the brake and control – is up to 4 times longer than the disengagement time with the rated air gap.



Spring-applied brake

Manual release

By actuating the manual release lever, the brake can be released manually during operation at zero current. Manual release facilitates positioning and maintenance work.

Manual release lever for IEC motors

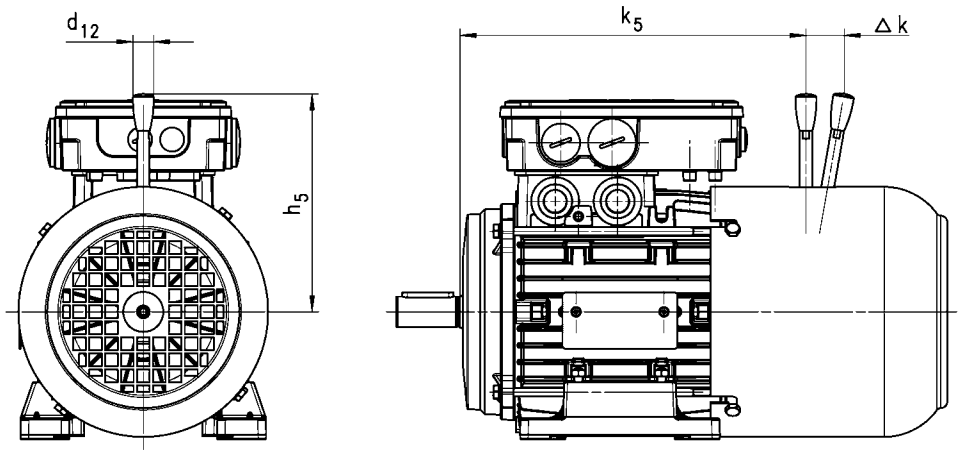

	Size	Dimensions			
	Brake				
		k_5	Δ k	h_5	d_{12}
		[mm]	[mm]	[mm]	[mm]
m500-P132M4	14 16	405 407	41 55	195 240	24.0 24.0
m500-P132L4	14 16	405 407	41 55	195 240	24.0 24.0
m500-P160M4	16 18	479 484	55 59	240 279	24.0 24.0
m500-P160L4	18	484	59	279	24.0
m500-P180M4	18 20	552 559	59 74	279 319	24.0 24.0
m500-P180L4	18 20	552 559	59 74	279 319	24.0 24.0
m500-P200M4	18 20	620 626	59 74	279 319	24.0 24.0
m500-P225M4	25	650	103	445	24.0
m500-P225L4	25	650	103	445	24.0

The following combinations with manual release lever and motor connection in the same position are not possible:
- HAN connector with connection in position 1



Spring-applied brake

Manual release

Manual release lever for geared motors

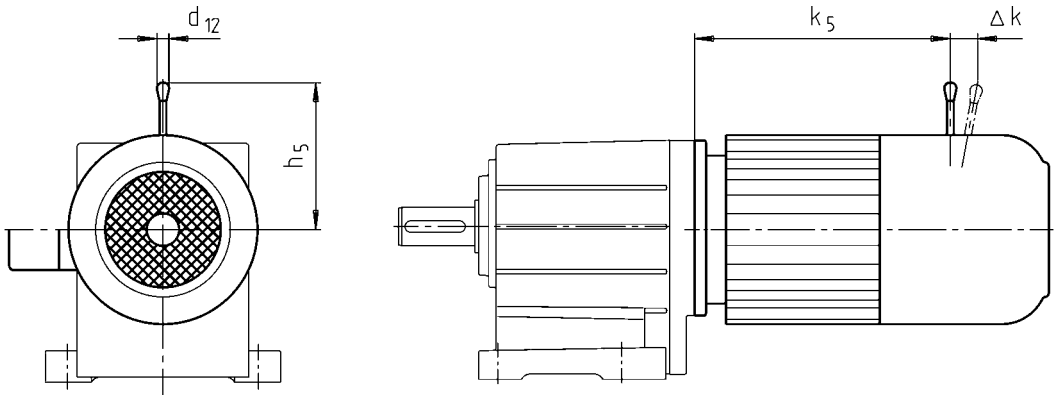

	Size	Dimensions			
	Brake				
		k_5	Δ k	h_5	d_{12}
		[mm]	[mm]	[mm]	[mm]
m500-P132M4	14 16	403 406	41 55	195 240	24.0 24.0
m500-P132L4	14 16	403 406	41 55	195 240	24.0 24.0
m500-P160M4	16 18	512 517	55 59	240 279	24.0 24.0
m500-P160L4	18	517	59	279	24.0
m500-P180M4	18 20	574 581	59 74	279 319	24.0 24.0
m500-P180L4	18 20	574 581	59 74	279 319	24.0 24.0
m500-P180V4	18 20	624 630	59 74	279 319	24.0 24.0
m500-P225M4	25	704	103	445	24.0
m500-P225L4	25	704	103	445	24.0

The following combinations with manual release lever and motor connection in the same position are not possible:
- HAN connector with connection in position 1



Temperature monitoring

To protect the motor against overheating, the following thermal sensors are provided.
The thermal sensors are integrated into the windings. We recommend using an additional motor protection switch.

TKO thermal contacts

The TCO thermal contact (thermal NC contact) is a bimetallic-element switch. The TCO monitors the motor winding temperature; at too high temperatures, the motor relay switches. The motor is disconnected from the mains.

Function	Operating temperature	Min. reset temperature	Max. reset temperature	Max. input current	Max. input voltage
					AC
	T	T_{min}	T_{max}	$I_{in,max}$	$U_{in,max}$
	-5 ... 5				
	[°C]	[°C]	[°C]	[A]	[V]
NC contact	150	90.0	135	2.50	250

PTC thermistor

The PTC thermistor is actuated in connection with a tripping unit. If the motor gets too hot, the motor can be switched off by means of a contactor. In contrast to the thermal contact, quick restart is possible.

Function	Operating temperature	Rated resistance			Standard
		155 °C	-20 °C	140 °C	
	T	R_N	R_N	R_N	
	-5 ... 5				
	[°C]	[Ω]	[Ω]	[Ω]	
Sudden change in resistance	150	550	30.0	250	DIN 44080 DIN VDE 0660 Part 303



Temperature monitoring

KTY temperature sensor

The KTY thermal detectors work as continuously variable resistors, showing a similar tendency as PTC thermistors. However, with an increasing temperature, the resistance only increases comparatively slowly, enabling the controller to determine the temperature at regular intervals and to already perform a process evaluation at an early stage. In this way, the motor can already be switched off before it is overheated.

	Function	Rated resistance			Max. input current	
		25 °C	150 °C	170 °C	25 °C	170 °C
		R_N	R_N	R_N	$I_{in,max}$	$I_{in,max}$
		[Ω]	[Ω]	[Ω]	[A]	[A]
KTY83-110	Continuous resistance change	1000	2225	2471	0.010	0.002
KTY84-130	Continuous resistance change	603	1334	1482	0.010	0.002

Variation of resistance

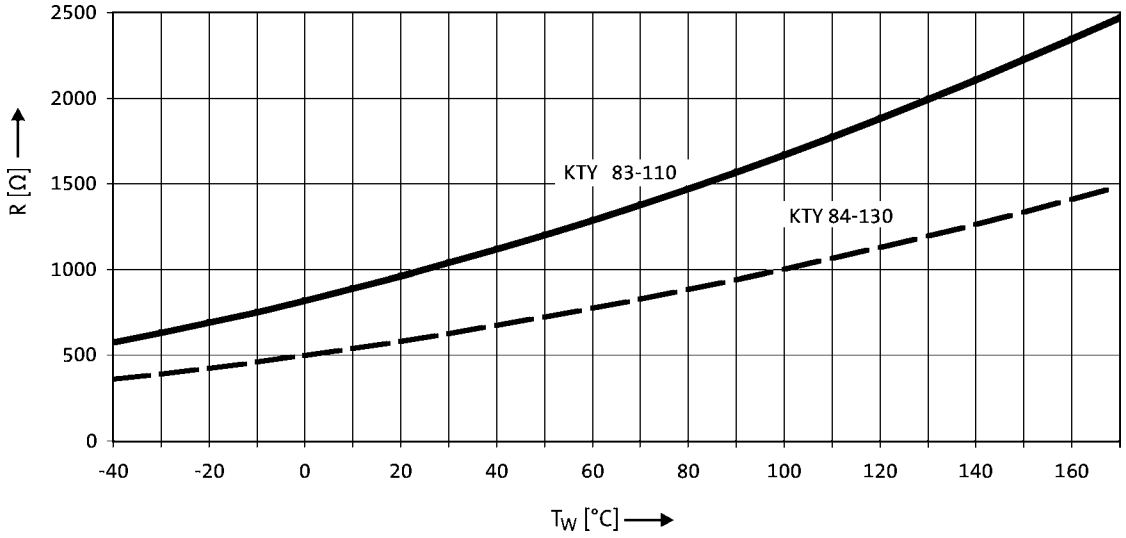

► If the detector is supplied with a measured current of 1 mA, the above relationship between the temperature and the resistance applies.



Blower

During operation with the rated torque at low speeds (< 20 Hz), the integral fan does not rotate fast enough anymore to ensure sufficient cooling of the motor. In order to prevent overheating, operation without a blower requires a torque reduction of the motor.
The blower cools the motor steadily and irrespective of the motor speed. A torque reduction is not required and the motor can be actuated with its rated torque from 5 Hz to the rated frequency.

Rated data for 50 Hz

Product	Number of phases	Connection method				
			$U_{N, AC}$	P_N	I_N	m
			[V]	[kW]	[A]	[kg]
m500-P132L4 m500-P132M4	1		230	0.11	0.48	4.20
	3	Δ		0.10	0.32	
		Y	400		0.19	
m500-P160M4 m500-P160L4	1		230	0.12	0.54	6.20
	3	Δ			0.38	
		Y	400		0.22	
m500-P180M4 m500-P180L4 m500-P180V4	1		230	0.22	0.96	8.00
	3	Δ		0.20	0.63	
		Y	400		0.36	
m500-P200M4	1		230	0.22	0.96	
	3	Δ		0.20	0.63	
		Y	400		0.36	
m500-P225L4 m500-P225M4		Δ	230		0.63	15.0
		Y	400		0.36	

5.5

Rated data for 60 Hz

Product	Number of phases	Connection method				
			$U_{N, AC}$	P_N	I_N	m
			[V]	[kW]	[A]	[kg]
m500-P132L4 m500-P132M4	3	Y	460	0.17	0.25	4.20
m500-P160M4 m500-P160L4				0.19	0.30	6.20
m500-P180M4 m500-P180L4 m500-P180V4				0.34	0.48	8.00
m500-P200M4						
m500-P225L4 m500-P225M4						15.0



Feedback

Depending on the application, the following resolvers, incremental encoders or absolute value encoders are provided for speed and position detection.

Resolver

The stator-supplied resolver with two stator windings shifted by 90° and a rotor winding with transformer winding can detect both the speed and the rotor position. The rotor position is retained in the event of a voltage failure.

► The three-phase AC motors with resolver cannot be used for speed-dependent safety functions in connection with the SM 301 safety module.

Product key				
				RS1
Accuracy				
			[']	-10 ... 10
Absolute positioning				
				1 revolution
Max. input voltage				
DC	$U_{in,max}$		[V]	10.0
Max. input frequency				
	$f_{in,max}$		[kHz]	4.00
Ratio				
Stator / rotor		± 5 %		0.30
Rotor impedance				
	Z_{ro}		[Ω]	51 + j90
Stator impedance				
	Z_{so}		[Ω]	102 + j150
Impedance				
	Z_{rs}		[Ω]	44 + j76
Min. insulation resistance				
At DC 500 V	R		[MΩ]	10.0
Number of pole pairs				
				1



Feedback

Incremental encoder and SinCos absolute value encoder

Incremental encoders can only be used for speed measurement, but not for speed control. Homing is required in order to enable positioning later.

Absolute value encoders can detect the speed, the rotor position, and the machine position with a very high resolution. They are used for the positioning of dynamic applications and do not require homing.

► The three-phase AC motors with incremental encoders or SinCos absolute value encoders cannot be used for speed-dependent safety functions in connection with the SM 301 safety module.

Encoder type			HTL incremental				TTL incremental			SinCos absolute value
Product key			IG128-24V-H	IG512-24V-H	IG1024-24V-H	IG2048-24V-H	IG512-5V-T	IG1024-5V-T	IG2048-5V-T	AM1024-8V-H
Encoder type										Multi-turn
Pulses			128	512	1024	2048	512	1024	2048	1024
Output signals			HTL				TTL			1 Vss
Interfaces			A, B track	A, B, N track and inverted						Hiperface
Absolute revolutions			0							4096
Accuracy		[']	-22.5 ... 22.5	-2 ... 2						-0.8 ... 0.8
Min. input voltage										
DC	$U_{in,min}$	[V]	8.00				4.75			7.00
Max. input voltage										
DC	$U_{in,max}$	[V]	26.0	30.0			5.25			12.0
Max. current consumption										
	I_{max}	[A]	0.040	0.15						0.080
Limit frequency										
	f_{max}	[kHz]	30.0	160			300			200
Inverter assignment			E84AVSC E84AVHC	E84AVHC			E84AVTC E94A ECS EVS93			

Inverters
- Inverter Drives 8400 StateLine (E84AVSC)
- Inverter Drives 8400 HighLine (E84AVHC)
- Inverter Drives 8400 TopLine (E84AVTC)

Servo-Inverters
- Servo Drives 9400 (E94A)
- 9300 servo inverters (EVS93)
- Servo Drives ECS

IE3 three-phase AC motors m200

Mains operation 5.5 ... 45 kW

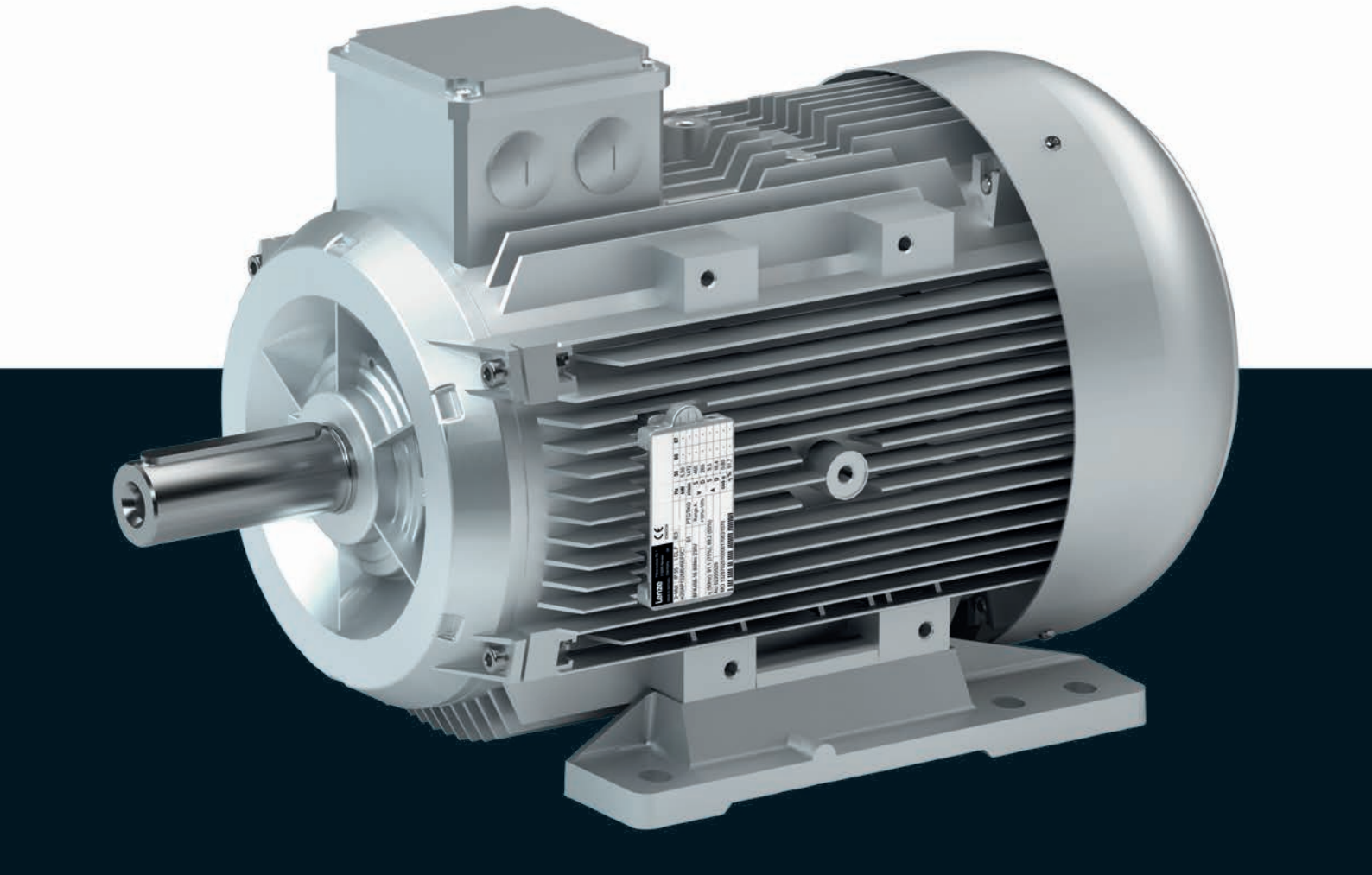

IE3 three-phase AC motors m200



Contents

General information	List of abbreviations	5.10 - 4
	Mains-operated motors	5.10 - 5
	Product information	5.10 - 5
	Equipment	5.10 - 6
	The modular motor system	5.10 - 7
Technical data	Standards and operating conditions	5.10 - 11
	Permissible radial and axial forces	5.10 - 12
	Rated data for 50 Hz	5.10 - 14
	Dimensions, self-ventilated (4-pole)	5.10 - 15
Accessories	Surface and corrosion protection	5.10 - 21
	Motor connection	5.10 - 22
	Connection via terminal box	5.10 - 24
	Spring-applied brake	5.10 - 26
	Temperature monitoring	5.10 - 37



List of abbreviations

$\eta_{100\,\%}$	[%]	Efficiency
$\eta_{75\,\%}$	[%]	Efficiency
$\eta_{50\,\%}$	[%]	Efficiency
cos ϕ		Power factor
I_N	[A]	Rated current
I_{max}	[A]	Max. current consumption
J	[kgcm²]	Moment of inertia
m	[kg]	Mass
M_a	[Nm]	Starting torque
M_b	[Nm]	Stalling torque
M_{max}	[Nm]	Max. torque
M_N	[Nm]	Rated torque
n_N	[r/min]	Rated speed
P_N	[kW]	Rated power
P_{max}	[kW]	Max. power input

U_{max}	[V]	Max. mains voltage
U_{min}	[V]	Min. mains voltage
$U_{N,\Delta}$	[V]	Rated voltage
$U_{N,Y}$	[V]	Rated voltage

CE	Communauté Européenne
CSA	Canadian Standards Association
DIN	Deutsches Institut für Normung e.V.
EMC	Electromagnetic compatibility
EN	European standard
IEC	International Electrotechnical Commission
IM	International Mounting Code
IP	International Protection Code
NEMA	National Electrical Manufacturers Association
UL	Underwriters Laboratory Listed Product
UR	Underwriters Laboratory Recognized Product
VDE	Verband deutscher Elektrotechniker (Association of German Electrical Engineers)
CCC	China Compulsory Certificate
EAC	Customs union Russia / Belarus / Kazakhstan certificate
cURus	Combined certification marks of UL for the USA and Canada
UkrSEPRO	Certificate for Ukraine



Mains-operated motors

In a power range of 0.12 to 45 KW, Lenze offers mains-operated three-phase AC motors for basic tasks.

These drives differ from each other with regard to their efficiency class and can be used for the types required for mains operation.

Customer benefit

- Different efficiency classes for the greatest economic benefit
- Saving of space by compact direct mounting to Lenze gearboxes
- Optimum adaptation of the brake reaction by optional holding brakes and service brakes
- Optional overheat control by temperature monitoring

Motor	Efficiency class	Power range	Mains voltage	Mains frequency
MD three-phase AC motor	IE1 motor	0.12 ... 22 kW	230/400 and 460 V	50 and 60 Hz
MH three-phase AC motor	IE2 motor	0.75 ... 45 kW	230/400 and 460 V	50 and 60 Hz
m200-P three-phase AC motor	IE3 motor	5.5 ... 45 kW	400 V	50 Hz
Lenze Smart Motor m300		1.75 and 5 Nm	400 ... 460 V	50 and 60 Hz

Product information

The product name

Operational performance	Product range		Design	Peak height	Motor length	Number of poles	Product
Mains operation	m200	-	P	132	M	4	m200-P132M4
					L		m200-P132L4
				160	M		m200-P160M4
					L		m200-P160L4
				180	M		m200-P180M4
					L		m200-P180L4
					V		m200-P180V4
				200	M		m200-P200M4
				225			m200-P225M4
					L		m200-P225L4



Equipment

Overview

The equipment includes all the options available as standard and all the built-on accessories of the product.

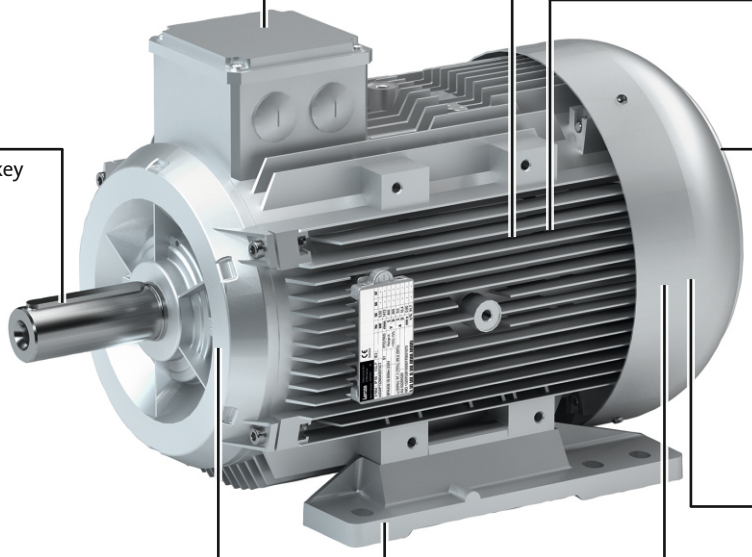

Motor connection
Terminal box

Output shaft
Solid shaft with feather key

Motor design
Flange (B5)with through holes

Motor design
Foot (B3)

Number of poles
4-pole, 5.5 ... 45 kW

Temperature monitoring
No
Thermal contact TKO
pTC thermistor

Cooling
Integral fan

Feedback
Without

Spring-applied brake
No
Standard
Option manual release lever



The modular motor system

Motor details

Product	m200-P132M4	m200-P132L4	m200-P160M4	m200-P160L4	m200-P180M4	m200-P180L4
Technical data						
Rated power	5.5 kW	7,5 kW	11 kW	15 kW	18.5 kW	22 kW
Mains voltage	400 V					
Mains frequency	50 Hz					
Operating mode	S1					
Motor design	B3 B5-FF265		B3 B5-FF300			
Motor shaft	38 x 80 mm		42 x 110 mm		48 x 110 mm	
Colour	Primed Paint in various corrosion-protection designs in accordance with RAL colours					
Surface and corrosion protection	Without OKS(uncoated) OKS-G (primed) OKS-S (Small); OKS-M (medium) OKS-L (large)					
Connection type	Terminal box					
Spring-applied brake						
Rated torque [Nm]	60 80		80 150		150 260	
Brake voltage [V]	DC 24 AC 230 AC 400					
Brake design	Standard					
	Standard					
Options	Manual release lever					
Feedback	Without					
Cooling	Integral fan					
Temperature monitoring	Without TKO thermal contact PTC thermistor					
Enclosure	IP55					



The modular motor system

Motor details

Product	m200-P180V4 [1]	m200-P200M4	m200-P225M4	m200-P225L4
Technical data				
Rated power	30 kW		37 kW	45 kW
Mains voltage	400 V			
Mains frequency	50 Hz			
Operating mode	S1			
Motor design		B3 B5-FF350	B3 B5-FF400	
Motor shaft		55 x 110 mm	60 x 140 mm	
Colour	Primed Paint in various corrosion-protection designs in accordance with RAL colours			
Surface and corrosion protection	Without OKS(uncoated) OKS-G (primed) OKS-S (Small); OKS-M (medium) OKS-L (large)			
Connection type	Terminal box			
Spring-applied brake				
Rated torque [Nm]	150 260		400	
Brake voltage [V]	DC 24 AC 230 AC 400			
Brake design	Standard			
	Standard			
Options	Manual release lever			
Feedback	Without			
Cooling	Integral fan			
Temperature monitoring	Without TKO thermal contact PTC thermistor			
Enclosure	IP55			

[1] This motor is intended for direct mounting to a gearbox and is not available in motor design B3 or B5.



The modular motor system

Motor details

Design
 B3 (with foot)  B5 (with flange)

Connection type
 Terminal box

Cooling: integral fan
 Without built-on accessories  With spring-applied brake With or without manual release lever





Standards and operating conditions

Overview

Enclosure			
EN 60529			IP55 [1]
Energy efficiency class			
IEC 60034-30			IE3
IEC 60034-2-1			Methodology for measuring efficiency
Conformity			
CE			Low-Voltage Directive
			2006/95/EC
Temperature class			
IEC/EN 60034-1; utilisation			B
IEC/EN 60034-1; insulation system (enamel-insulated wire)			F
Vibrational severity			
IEC/EN 60034-14			A
Climatic conditions			
Transport (EN 60721-3-2)			2K3 (temperature: -20 °C ... +70 °C)
Storage (EN 60721-3-1)			1K3 (temperature: -20 °C ... +60 °C)
Storage (EN 60721-3-1) > 3 months			1K3 (Temperature: -20 °C ... +40 °C)
Operation (EN 60721-3-3)			3K3 (temperature: -20°C ... +40°C)
Operation (EN 60721-3-3) with brake			3K3 (temperature: -10 °C ... +40 °C)
Operation (EN 60721-3-3) with blower			3K3 (Temperature: -15 °C ... +40 °C)
Max. ambient operating temperature			
With power reduction	$T_{opr,max}$	[°C]	60
Site altitude			
Amsl	H_{max}	[m]	4000

[1] Types with deviating degrees of protection:
IP55 with brake (IP54 with manual release lever).

► In the European Union, the ErP Directive stipulates minimum efficiency levels for three-phase AC motors. Geared three-phase AC motors that do not conform with this Directive do not meet CE requirements and must not be marketed in the European Economic Area. For further information about the ErP Directive and the Lenze products to which it relates, please refer to the brochure entitled "International efficiency directives for three-phase AC motors".



Permissible radial and axial forces

Application of forces

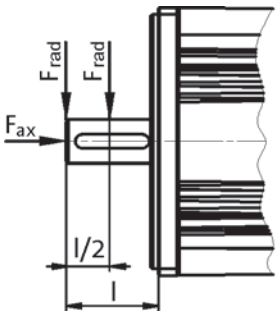

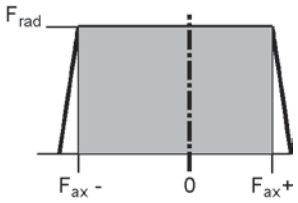

Application of force at l/2

► Forces at medium speed 1500 r/min

	Bearing service life L_{10}											
	10000 h			20000 h			30000 h			50000 h		
	F_{rad} [N]	$F_{ax,-}$ [N]	$F_{ax,+}$ [N]	F_{rad} [N]	$F_{ax,-}$ [N]	$F_{ax,+}$ [N]	F_{rad} [N]	$F_{ax,-}$ [N]	$F_{ax,+}$ [N]	F_{rad} [N]	$F_{ax,-}$ [N]	$F_{ax,+}$ [N]
m200-P132M4	2323	-653	1253	1863	-422	1022	1639	-313	913	1357	-201	801
m200-P132L4	2323	-653	1253	1863	-422	1022	1639	-313	913	1357	-201	801
m200-P160M4	4074	-1407	2067	3264	-984	1644	2871	-787	1447	2444	-583	1243
m200-P160L4	4074	-1407	2067	3264	-984	1644	2871	-787	1447	2444	-583	1243
m200-P180M4	4943	-1580	2480	3969	-1088	1988	3496	-854	1754	2983	-594	1494
m200-P180L4	4943	-1580	2480	3969	-1088	1988	3496	-854	1754	2983	-594	1494
m200-P200M4	6666	-2202	3122	5359	-1555	2475	4724	-1251	2171	4036	-942	1862
m200-P225M4	7386	-2527	3477	5956	-1800	2750	5260	-1460	2410	4508	-1111	2061
m200-P225L4	7386	-2527	3477	5956	-1800	2750	5260	-1460	2410	4508	-1111	2061

► The values for the bearing service life L_{10} refer to an average speed of 1500 r/min and are additionally reduced by the grease lifetime, depending on the ambient temperatures.
► Data for axial forces relate to the maximum radial force with the corresponding bearing service life.



Permissible radial and axial forces

Application of force at l

► Forces at medium speed 1500 r/min

Bearing service life L_{10}												
	10000 h			20000 h			30000 h			50000 h		
	F_{rad} [N]	$F_{ax,-}$ [N]	$F_{ax,+}$ [N]	F_{rad} [N]	$F_{ax,-}$ [N]	$F_{ax,+}$ [N]	F_{rad} [N]	$F_{ax,-}$ [N]	$F_{ax,+}$ [N]	F_{rad} [N]	$F_{ax,-}$ [N]	$F_{ax,+}$ [N]
m200-P132M4	2091	-653	1253	1677	-422	1022	1475	-313	913	1257	-201	801
m200-P132L4	2091	-653	1253	1677	-422	1022	1475	-313	913	1257	-201	801
m200-P160M4	3610	-1407	2067	2892	-984	1644	2543	-787	1447	2166	-583	1243
m200-P160L4	3610	-1407	2067	2892	-984	1644	2543	-787	1447	2166	-583	1243
m200-P180M4	4462	-1580	2480	3583	-1088	1988	3156	-854	1754	2693	-594	1494
m200-P180L4	4462	-1580	2480	3583	-1088	1988	3156	-854	1754	2693	-594	1494
m200-P200M4	6069	-2202	3122	4880	-1555	2475	4301	-1251	2171	3675	-942	1862
m200-P225M4	6588	-2527	3477	5313	-1800	2750	4692	-1460	2410	4021	-1111	2061
m200-P225L4	6588	-2527	3477	5313	-1800	2750	4692	-1460	2410	4021	-1111	2061

► The values for the bearing service life L_{10} refer to an average speed of 1500 r/min and are additionally reduced by the grease lifetime, depending on the ambient temperatures.
► Data for axial forces relate to the maximum radial force with the corresponding bearing service life.



Rated data for 50 Hz

4-pole motors

	P_N	n_N	$U_{N,\Delta}$	$I_{N,\Delta}$	$U_{N,Y}$	$I_{N,Y}$	I_a/I_N
			± 5 %		± 5 %		
	[kW]	[r/min]	[V]	[A]	[V]	[A]	
m200-P132M4	5.50	1465	400	11.1			8.70
m200-P132L4	7.50	1460	400	14.8			9.50
m200-P160M4	11.0	1470	400	22.0			8.10
m200-P160L4	15.0	1470	400	28.6			8.20
m200-P180M4	18.5	1460	400	34.1			7.70
m200-P180L4	22.0	1465	400	39.9			7.70
m200-P180V4 [3]	30.0	1475	400	55.3			8.00
m200-P200M4	30.0	1475	400	55.3			8.00
m200-P225M4	37.0	1485	400	68.9			7.50
m200-P225L4	45.0	1485	400	83.0			7.70

	M_N	M_a	M_b	cos ϕ	$\eta_{50\,\%}$	$\eta_{75\,\%}$	$\eta_{100\,\%}$	J [1]	m [1]
	[Nm]	[Nm]	[Nm]		[%]	[%]	[%]	[kgcm²]	[kg]
m200-P132M4	36.2	116	156	0.79	86.9	89.2	89.6	276	55.0
m200-P132L4	49.4	158	222	0.81	88.9	90.5	90.4	298	57.0
m200-P160M4	71.8	208	273	0.81	90.1	91.6	91.4	692	92.0
m200-P160L4	97.6	283	371	0.83	92.8	92.8	92.1	704	99.0
m200-P180M4	121	290	411	0.87	92.8	93.2	92.6	1122	126
m200-P180L4	143	372	501	0.87	92.7	93.2	93.0	1277	135
m200-P180V4 [3]	194	561	697	0.86	92.7	93.6	93.6	2645	183
m200-P200M4	194	561	697	0.86	92.7	93.6	93.6	2645	183
m200-P225M4	238	715	834	0.85	92.0	93.5	93.9	3643	260
m200-P225L4	290	871	1016	0.85	93.0	94.1	94.2	4351	280

[1] Without accessories
[2] Star/delta start-up possible at 400 V.
[3] This motor is intended for direct mounting to a gearbox and is not available in motor design B3 or B5.



Dimensions, self-ventilated (4-pole)

m200-P132

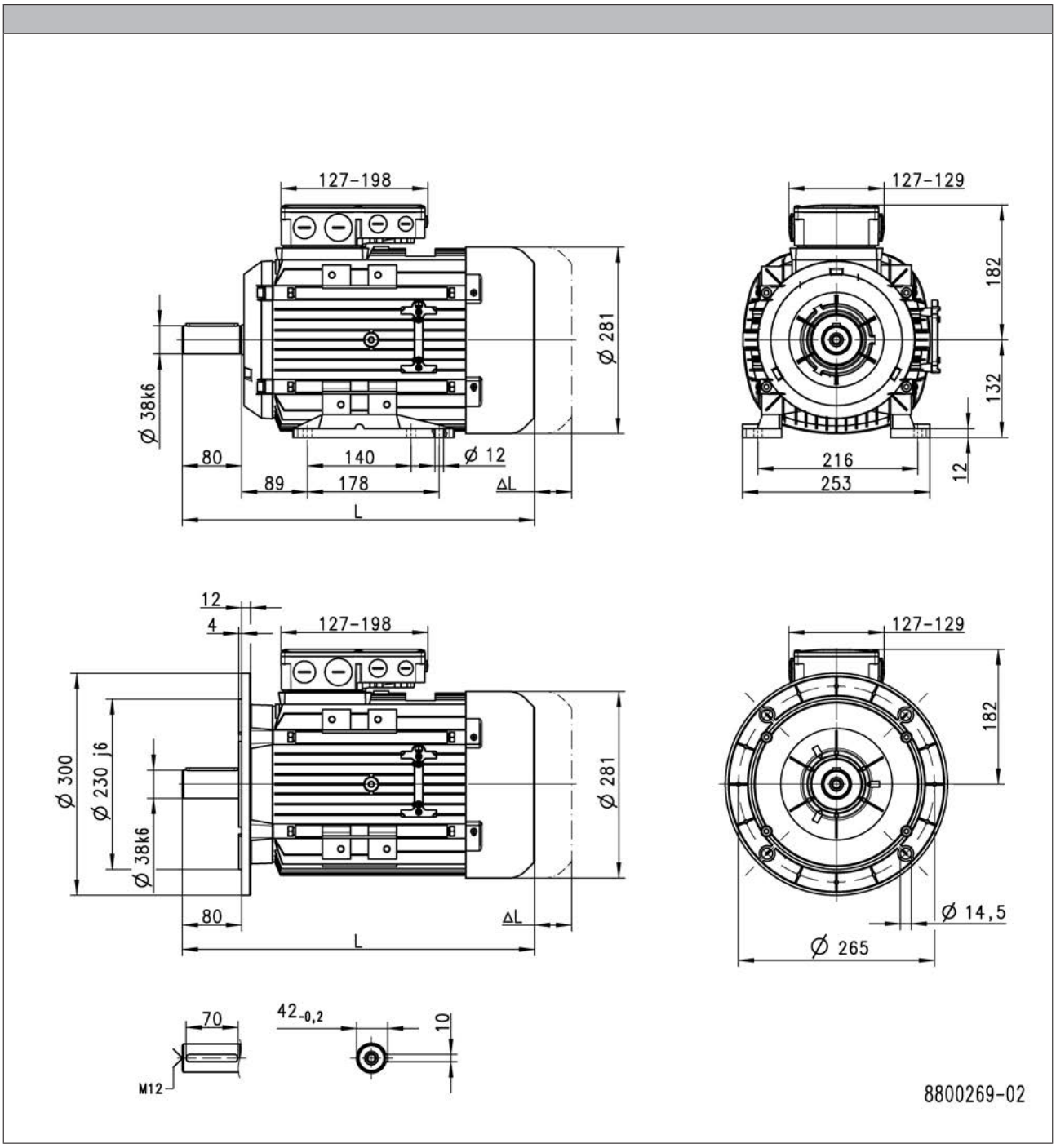

Product			m200-P132M4	m200-P132L4
Dimensions				
Motor length	L	[mm]	476	
Length of motor options	Δ L	[mm]	118	

L = length of the motor without built-on accessories
ΔL = additional length of the built-on accessories (with brake)



Dimensions, self-ventilated (4-pole)

m200-P160

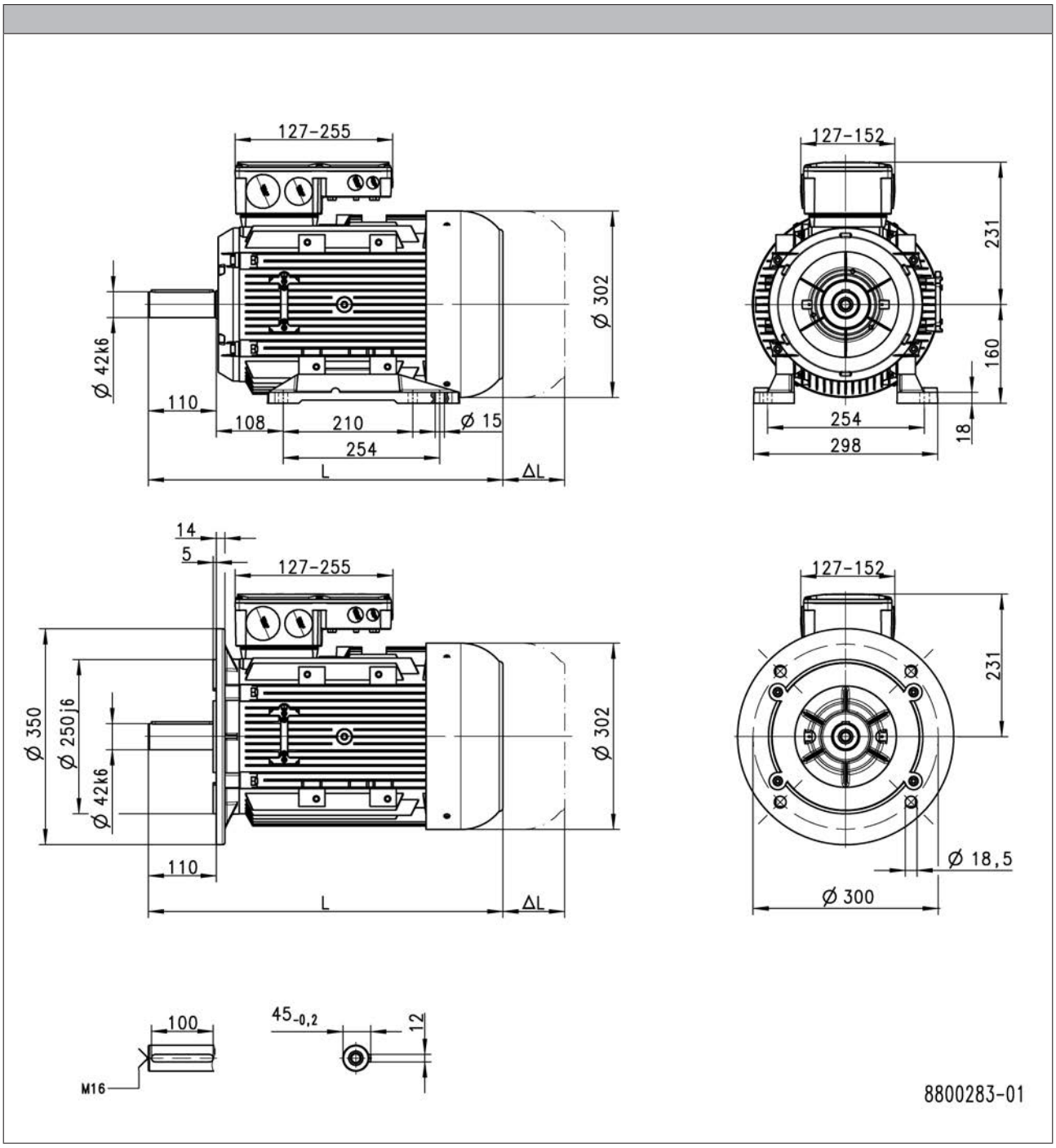

Product			m200-P160M4	m200-P160L4
Dimensions				
Motor length	L	[mm]	575	
Length of motor options	Δ L	[mm]	144	

L = length of the motor without built-on accessories
ΔL = additional length of the built-on accessories (with brake)



Dimensions, self-ventilated (4-pole)

m200-P180

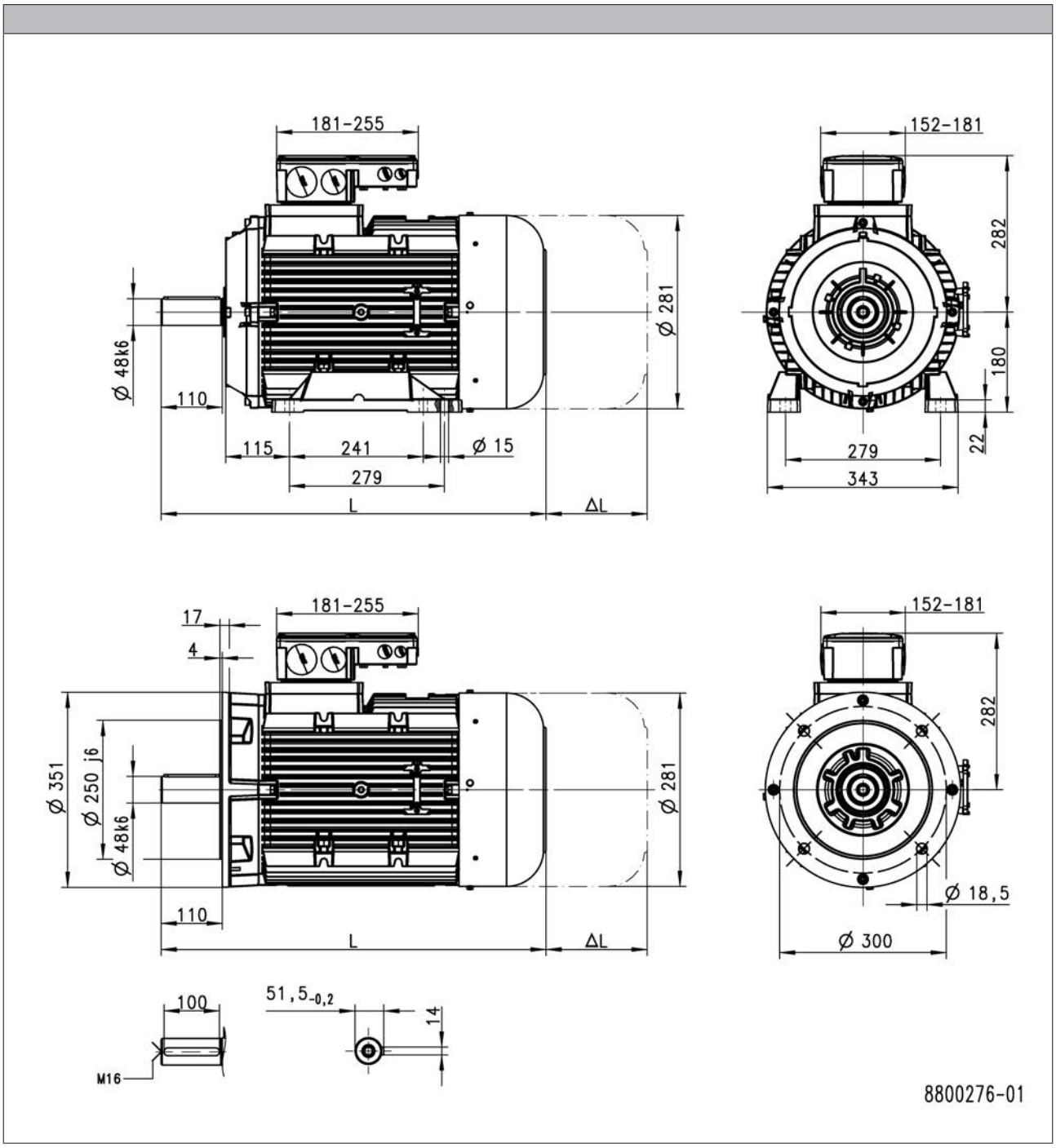

Product			m200-P180M4	m200-P180L4
Dimensions				
Motor length	L	[mm]	689	
Length of motor options	Δ L	[mm]	108	

L = length of the motor without built-on accessories
ΔL = additional length of the built-on accessories (with brake)



Dimensions, self-ventilated (4-pole)

m200-P200

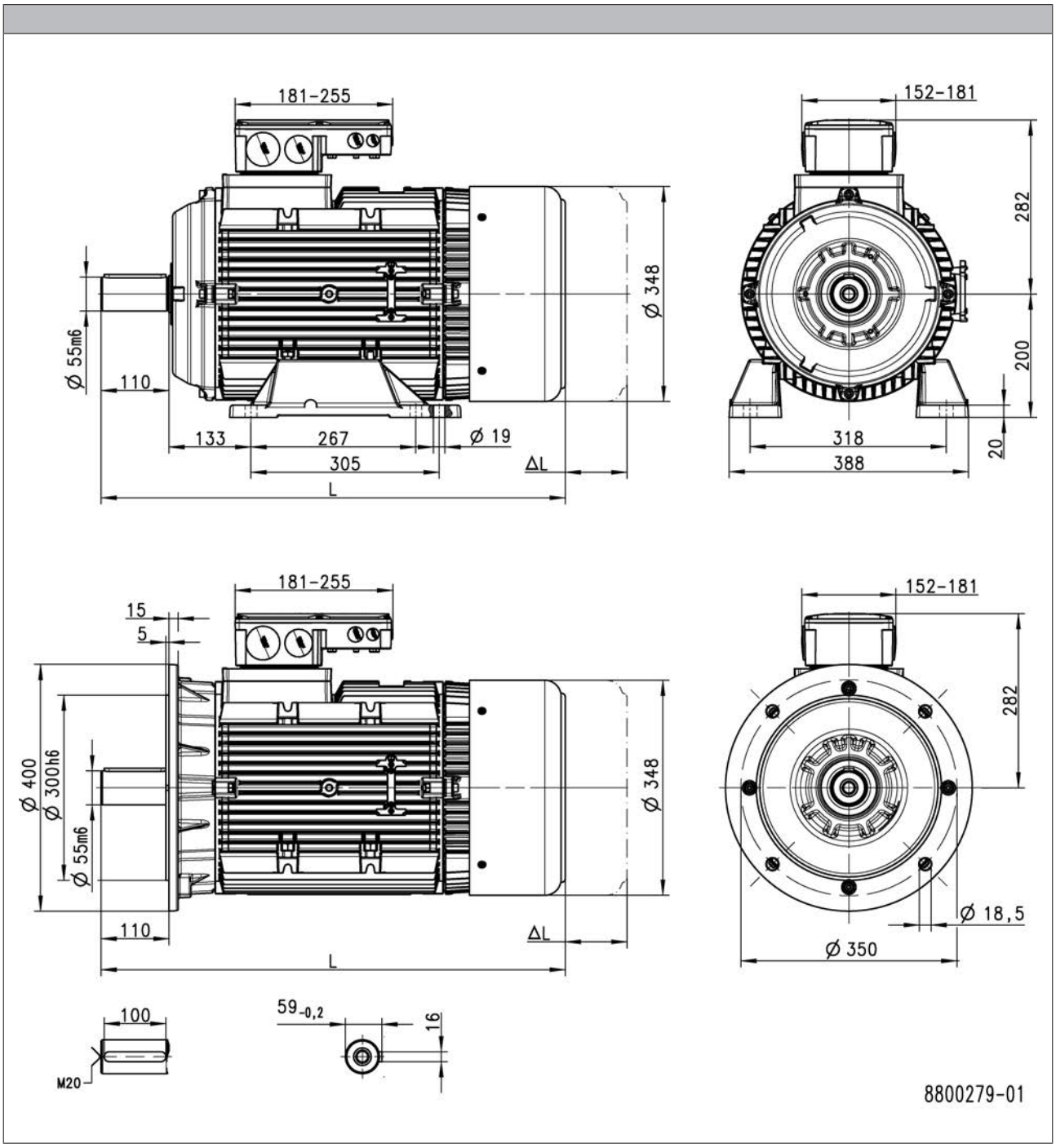

Product			m200-P200M4
Dimensions			
Motor length	L	[mm]	756
Length of motor options	Δ L	[mm]	113

L = length of the motor without built-on accessories
ΔL = additional length of the built-on accessories (with brake)



Dimensions, self-ventilated (4-pole)

m200-P225

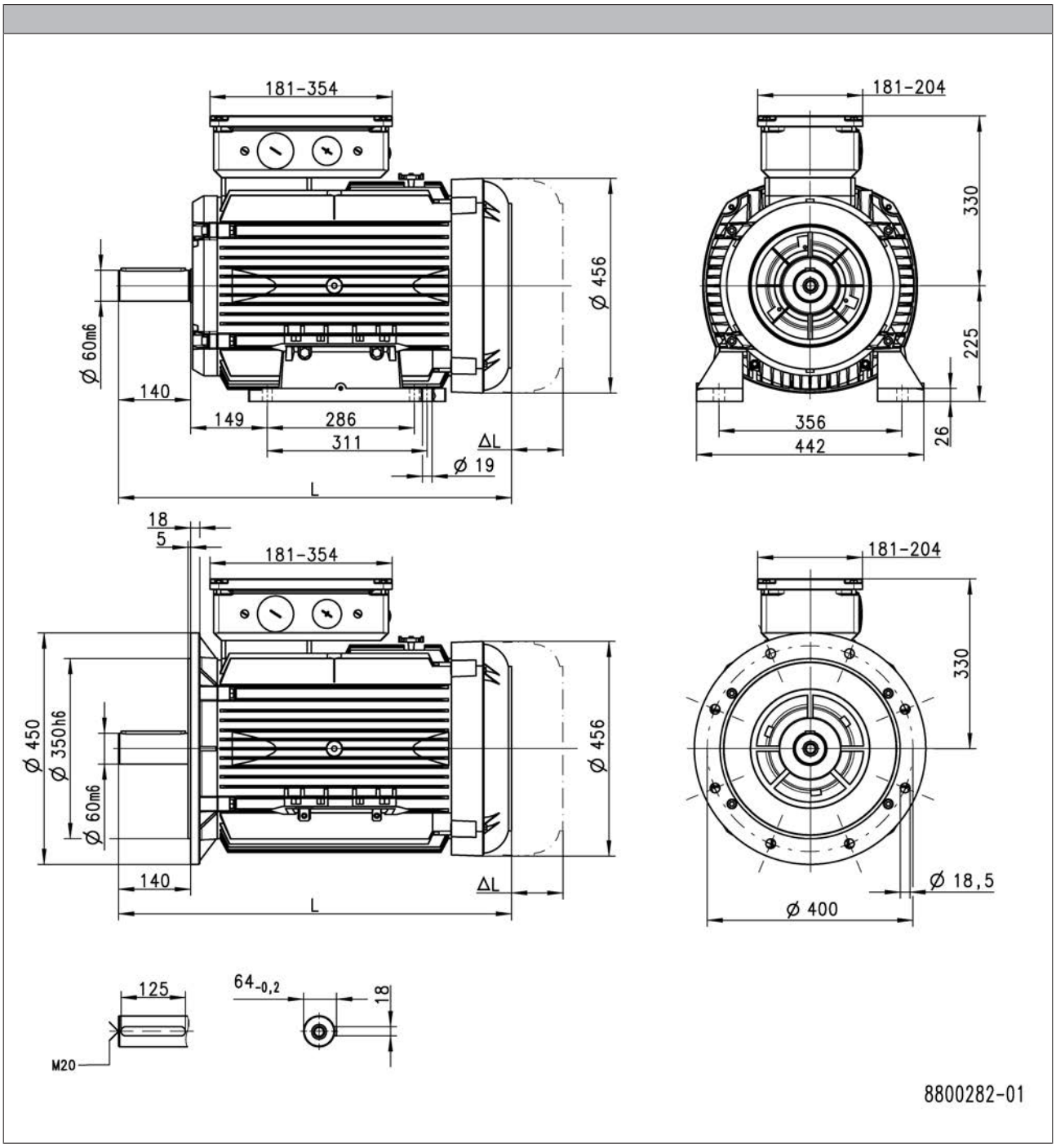

Product			m200-P225M4	m200-P225L4
Dimensions				
Motor length	L	[mm]	767	
Length of motor options	Δ L	[mm]	202	

L = length of the motor without built-on accessories
ΔL = additional length of the built-on accessories (with brake)





Surface and corrosion protection

For optimum protection of three-phase AC motors against ambient conditions, the surface and corrosion protection system (OKS) offers tailor-made solutions.

Various surface coatings ensure that the motors operate reliably even at high air humidity, in outdoor installation or in the presence of atmospheric impurities. Any colour from the RAL Classic collection can be chosen for the top coat. The three-phase AC motors are also available unpainted (no surface and corrosion protection).

Surface and corrosion protection system	Applications	Measures
OKS-G (primed)	• Dependent on subsequent top coat applied	• 2K PUR priming coat (grey)
OKS-S (small)	• Standard applications • Internal installation in heated buildings • Air humidity up to 90%	• Surface coating as per corrosivity category C1 (in line with EN 12944-2)
OKS-M (medium)	• Internal installation in non-heated buildings • Covered, protected external installation • Air humidity up to 95%	• Surface coating as per corrosivity category C2 (in line with EN 12944-2)
OKS-L (high)	• External installation • Air humidity above 95% • Chemical industry plants • Food industry	• Surface coating as per corrosivity category C3 (in line with EN 12944-2) • Blower cover and B end shield additionally primed • Screws zinc-coated • Cable glands with gaskets • Corrosion-resistant brake with cover ring, stainless friction plate, and chrome-plated armature plate (on request) Optional measures: • Motor recesses sealed off (on request)

Structure of surface coating

Surface and corrosion protection system	Corrosivity category	Surface coating	Colour
	DIN EN ISO 12944-2	Structure	
Without OKS (uncoated)			
OKS-G (primed)		2K PUR priming coat	
OKS-S (small)	Comparable to C1	2K-PUR top coat	Standard: RAL 7012 Optional: RAL Classic
OKS-M (medium)	Comparable to C2	2K PUR priming coat 2K-PUR top coat	
OKS-L (high)	Comparable to C3		



Motor connection

The m200 three-phase AC motors are destined for operation on the supply system. They are connected via a terminal box.

Connection via terminal box

The connection in the terminal box is implemented via conventional cable glands. Depending on the type of the built-on accessories, different terminal boxes are used.

The following combinations are distinguished:
- Motors without built-on accessories
- Motors with a spring-applied brake

Cable entries for motors without built-on accessories

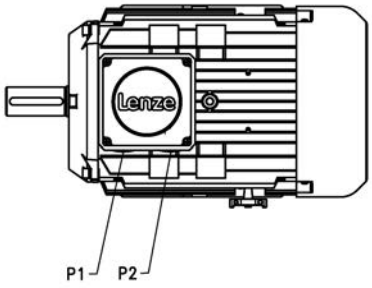

Product	Dimensions	
	P_1	P_2
	[mm]	[mm]
m200-P132M4	M32x1.5	M32x1.5
m200-P132L4		
m200-P160M4		
m200-P160L4		
m200-P180M4	M40x1.5	M40x1.5
m200-P180L4		
m200-P180V4		
m200-P200M4	M50x1.5	M50x1.5
m200-P225M4		
m200-P225L4		



Connection via terminal box

Cable entries for motors without built-on accessories

For IEC standard motors without built-on accessories, the position of the cable entry can be selected.

Position of the cable entry for IEC standard motors

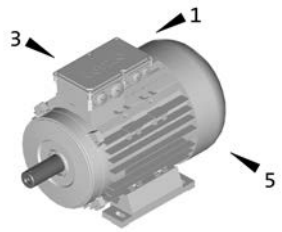

Possible cable entry position	1/3/5*

For geared motors without built-on accessories, the position of the cable entry must be selected as a function of the terminal box position.

Position of the cable entry for geared motors

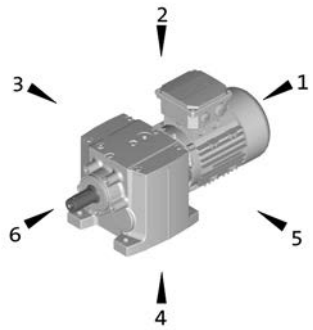

Terminal box position	2	3	4	5
Possible cable entry position	1/3/5*	1/2*/4	1/3*/5	1/2/4*

► If preferred positions are not specified in the order, the cable entry will be positioned as indicated by * on the diagram below.



Connection via terminal box

Cable entries for motors with built-on accessories

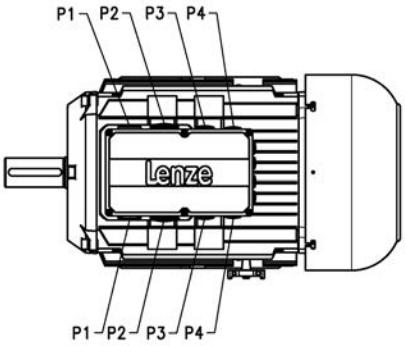

Product	Dimensions			
	P_1	P_2	P_3	P_4
	[mm]	[mm]	[mm]	[mm]
m200-P132M4	M25x1.5	M32x1.5	M20x1.5	M16x1.5
m200-P132L4				
m200-P160M4	M50x1.5	M40x1.5		
m200-P160L4				
m200-P180M4				
m200-P180L4				
m200-P180V4				
m200-P200M4				
m200-P225M4	M12x1.5	M63x1.5	M50x1.5	M12x1.5
m200-P225L4				





Spring-applied brake

The three-phase AC motors can be equipped with a spring-applied brake which is active when the supply voltage has been switched off (closed-circuit principle). In the deenergised state, the brake is applied. This prevents possible movement of the motor shaft with regard to the load after switch-off or in the event of a power failure.
For optimum adaptation of the brake motor to the application, several brake sizes and control variants are provided for each motor.

Types
- **Standard**
  - 1 x 10^6 repeating switching cycles
  - 1 x 10^6 reversing switching cycles

Control
- DC supply
- AC supply via rectifiers in the terminal box

Enclosure
- Without manual release IP55
- With manual release IP54

Friction lining
- Asbestos-free, low-wear

Options
- Manual release

Braking torques

In addition to the standard braking torque, depending on the brake size, the possibility of choosing between a reduced and an increased braking torque is provided.
- When the braking torque is reduced, great wear reserves can be attained. This is enabled by a reduction of the spring rate.
- In order to obtain a greater braking torque, the spring rate is increased. This is practical, for instance, for hoists, since here the gravity acts as an additional acceleration in the negative direction.

Manual release

5.10

By actuating the manual release lever, the brake can be released manually during operation at zero current. Manual release facilitates positioning and maintenance work.



Spring-applied brake

Direct connection without rectifier

If the brake is activated directly without a rectifier, a freewheeling diode or a spark suppressor is required for protection against induction peaks.

- Supply voltages
  DC 24 V

Connection via mains voltage with brake rectifier

If the brake is not directly supplied with DC voltage, a rectifier is required. This is included in the scope of supply and is located in the terminal box of the motor. The rectifier converts the AC voltage of the connection into DC voltage. The following rectifiers are available:

Half-wave rectifier, 6-pole

- Supply voltage / brake coil voltage ratio = 2.22
- Supply voltages
  AC 400 V

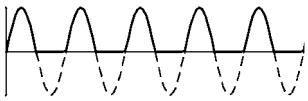

Bridge rectifier, 6-pole

- Ratio of supply voltage to brake coil voltage = 1.11
- Supply voltage
  AC 230 V





Spring-applied brake

Assignment of 4-pole motors and brakes

Product	Size	Rated torque
	Brake	
		M_k
		[Nm]
m200-P132M4	14 14 16 16	35.0 60.0 60.0 80.0
m200-P132L4	14 14 16 16 16	35.0 60.0 60.0 80.0 100
m200-P160M4	16 16 18 18	60.0 80.0 80.0 150
m200-P160L4	18 18 18	80.0 150 200
m200-P180M4	18 18 20 20	80.0 150 145 260
m200-P180L4	18 18 20 20 20	80.0 150 145 260 315
m200-P180V4	18 18 20 20 20 20	80.0 150 145 260 315 400
m200-P200M4	18 18 20 20 20 20	80.0 150 145 260 315 400
m200-P225M4	25 25 25	265 400 490
m200-P225L4	25 25 25 25	265 400 490 600



Spring-applied brake

Permissible friction energy

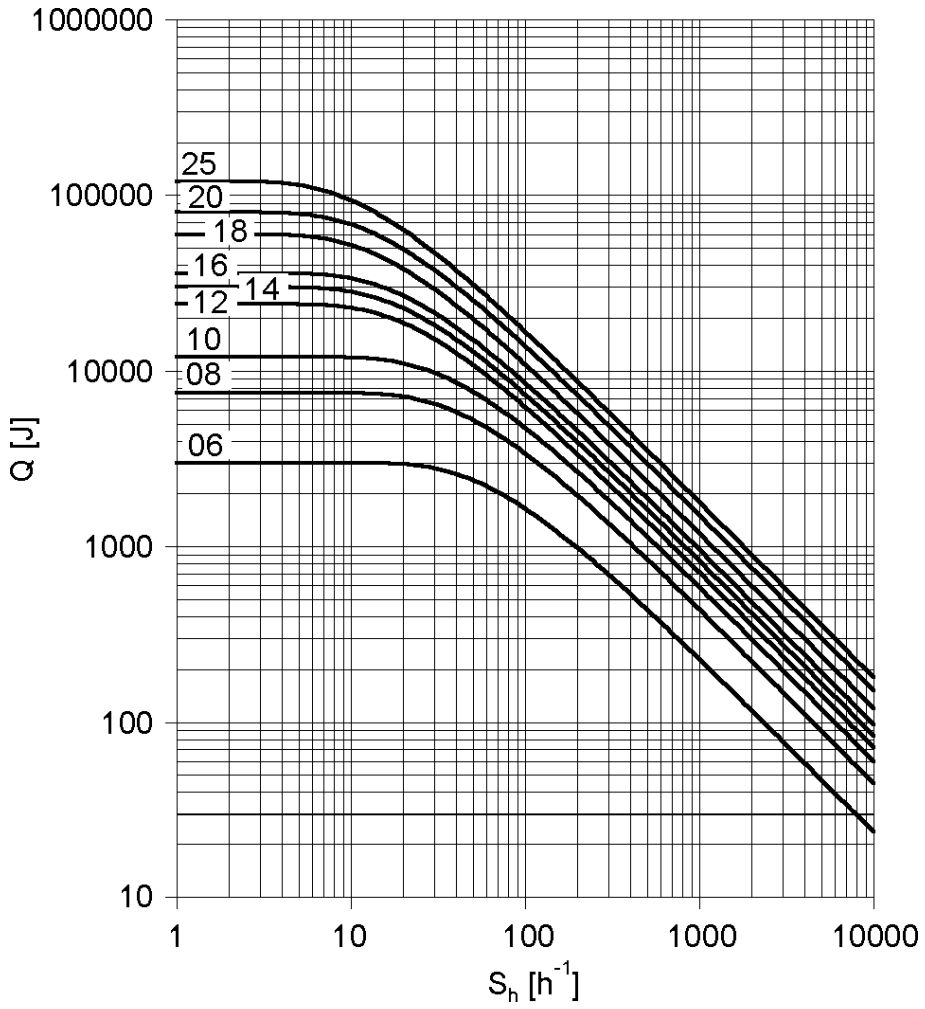

Q =Switching energy per switching cycle
S_h =Operating frequency
Brake size = 06 to 25



Spring-applied brake

Rated data with reduced braking torque

► Please enquire for braking torques and maximum switching work values not listed here.

Size			06	08	10	12	14	16	18	20	25
Power input											
	P_{in}	[kW]	0.020	0.025	0.030	0.040	0.050	0.055	0.085	0.10	0.11
Braking torque											
100	M_B	[Nm]	2.50	3.50	7.00	14.0	35.0	60.0	80.0	145	265
1000	M_B	[Nm]	2.30	3.10	6.10	12.0	30.0	50.0	65.0	115	203
1200	M_B	[Nm]	2.30	3.10	6.00	12.0	29.0	48.0	63.0	112	199
1500	M_B	[Nm]	2.20	3.00	5.80	11.0	28.0	47.0	61.0	109 [1)]	193 [1)]
1800	M_B	[Nm]	2.10	2.90	5.70	11.0	28.0	46.0	60.0 [1)]		
3000	M_B	[Nm]	2.00	2.80	5.30	10.0	26.0 [1)]	43.0 [1)]			
3600	M_B	[Nm]	2.00	2.70	5.20	10.0 [1)]					
Maximum switching energy											
100	Q_E	[KJ]	3.00	7.50	12.0	24.0	30.0	36.0	60.0	80.0	120
1000	Q_E	[KJ]	3.00	7.50	12.0	24.0	30.0	36.0	60.0	80.0	120
1200	Q_E	[KJ]	3.00	7.50	12.0	24.0	30.0	36.0	60.0	80.0	120
1500	Q_E	[KJ]	3.00	7.50	12.0	24.0	30.0	36.0	60.0	24.0 [1)]	36.0 [1)]
1800	Q_E	[KJ]	3.00	7.50	12.0	24.0	30.0	36.0	36.0 [1)]		
3000	Q_E	[KJ]	3.00	7.50	12.0	24.0	18.0 [1)]	11.0 [1)]			
3600	Q_E	[KJ]	3.00	7.50	12.0	7.00 [1)]					
Transition operating frequency											
	$S_{hü}$	[1/h]	79.0	50.0	40.0	30.0	28.0	27.0	20.0	19.0	15.0
Moment of inertia											
	J	[kgcm²]	0.015	0.061	0.20	0.45	0.63	1.50	2.90	7.30	20.0
Mass											
	m	[kg]	0.90	1.50	2.60	4.20	5.80	8.70	12.6	19.5	31.0

[1)] In the region of the load limit the value for friction energy Q_{BW} can be reduced to 40 %.



Spring-applied brake

Rated data with reduced braking torque

► Activation via half-wave or bridge rectifier

Size			06	08	10	12	14	16	18	20	25
Friction energy											
	Q_{BW}	[MJ]	113	210	264	706	761	966	1542	2322	3522
Delay time											
Engaging	t_{11}	[ms]	11.0	14.0	20.0	21.0	37.0	53.0	32.0	47.0	264
Rise time											
Braking torque	t_{12}	[ms]	13.0	10.0	17.0	19.0	22.0	30.0	20.0	100	120
Engagement time											
	t_1	[ms]	24.0		37.0	40.0	59.0	83.0	52.0	147	384
Disengagement time											
	t_2	[ms]	35.0	37.0	57.0	65.0	148	169	230	207	269

► The brake response and application times are guide values. The engagement time is 10 times longer with AC-side switching. With the maximum air gap the disengagement time t_2 – depending on the brake and control – is up to 4 times longer than the disengagement time with the rated air gap.



Spring-applied brake

Rated data with standard braking torque

► Please enquire for braking torques and maximum switching work values not listed here.

Size			06	08	10	12	14	16	18	20	25
Power input											
	P_{in}	[kW]	0.020	0.025	0.030	0.040	0.050	0.055	0.085	0.10	0.11
Braking torque											
100	M_B	[Nm]	4.00	8.00	16.0	32.0	60.0	80.0	150	260	400
1000	M_B	[Nm]	3.70	7.20	14.0	27.0	51.0	66.0	121	206	307
1200	M_B	[Nm]	3.60	7.00	14.0	27.0	50.0	65.0	118	201	300
1500	M_B	[Nm]	3.50	6.80	13.0	26.0	48.0	63.0	115	195 [1)]	291 [1)]
1800	M_B	[Nm]	3.40	6.70	13.0	26.0	47.0	61.0	112 [1)]		
3000	M_B	[Nm]	3.20	6.30	12.0	24.0	44.0 [1)]	57.0 [1)]			
3600	M_B	[Nm]	3.20	6.10	12.0	23.0 [1)]					
Maximum switching energy											
100	Q_E	[KJ]	3.00	7.50	12.0	24.0	30.0	36.0	60.0	80.0	120
1000	Q_E	[KJ]	3.00	7.50	12.0	24.0	30.0	36.0	60.0	80.0	120
1200	Q_E	[KJ]	3.00	7.50	12.0	24.0	30.0	36.0	60.0	80.0	120
1500	Q_E	[KJ]	3.00	7.50	12.0	24.0	30.0	36.0	60.0	24.0 [1)]	36.0 [1)]
1800	Q_E	[KJ]	3.00	7.50	12.0	24.0	30.0	36.0	36.0 [1)]		
3000	Q_E	[KJ]	3.00	7.50	12.0	24.0	18.0 [1)]	11.0 [1)]			
3600	Q_E	[KJ]	3.00	7.50	12.0	7.00 [1)]					
Transition operating frequency											
	$S_{hü}$	[1/h]	79.0	50.0	40.0	30.0	28.0	27.0	20.0	19.0	15.0
Moment of inertia											
	J	[kgcm²]	0.015	0.061	0.20	0.45	0.63	1.50	2.90	7.30	20.0
Mass											
	m	[kg]	0.90	1.50	2.60	4.20	5.80	8.70	12.6	19.5	31.0

[1)] In the region of the load limit the value for friction energy Q_{BW} can be reduced to 40 %.



Spring-applied brake

Rated data with standard braking torque

► Activation via half-wave or bridge rectifier

Size			06	08	10	12	14	16	18	20	25
Friction energy											
	Q_{BW}	[MJ]	85.0	158	264	530	571	966	1542	2322	3522
Delay time											
Engaging	t_{11}	[ms]	15.0		28.0		17.0	27.0	33.0	65.0	110
Rise time											
Braking torque	t_{12}	[ms]	13.0	16.0	19.0	25.0		30.0	45.0	100	120
Engagement time											
	t_1	[ms]	28.0	31.0	47.0	53.0	42.0	57.0	78.0	165	230
Disengagement time											
	t_2	[ms]	45.0	57.0	76.0	115	210	220	270	340	390

► The brake response and application times are guide values. The engagement time is 10 times longer with AC-side switching. With the maximum air gap the disengagement time t_2 – depending on the brake and control – is up to 4 times longer than the disengagement time with the rated air gap.



Spring-applied brake

Rated data with increased braking torque

► Please enquire for braking torques and maximum switching work values not listed here.

Size			10	12	14	16	16	18	20	20	25	25
Power input												
	P_{in}	[kW]	0.030	0.040	0.050	0.055	0.055	0.085	0.10	0.10	0.11	0.11
Braking torque												
100	M_B	[Nm]	23.0	46.0	75.0	100	125	200	315	400	490	600
1000	M_B	[Nm]	20.0	39.0	64.0	83.0	103	162	249	317	376	461
1200	M_B	[Nm]	20.0	39.0	62.0	81.0	101	158	244	309	367	449
1500	M_B	[Nm]	19.0	38.0	60.0	78.0	98.0	153	237 [1)]	300 [1)]	356 [1)]	436 [1)]
1800	M_B	[Nm]	19.0	37.0	59.0	77.0	96.0	150 [1)]				
3000	M_B	[Nm]	17.0	34.0	55.0 [1)]	71.0 [1)]	89.0 [1)]					
3600	M_B	[Nm]	17.0	33.0 [1)]								
Maximum switching energy												
100	Q_E	[KJ]	12.0	24.0	30.0	36.0	36.0	60.0	80.0	80.0	120	120
1000	Q_E	[KJ]	12.0	24.0	30.0	36.0	36.0	60.0	80.0	80.0	120	120
1200	Q_E	[KJ]	12.0	24.0	30.0	36.0	36.0	60.0	80.0	80.0	120	120
1500	Q_E	[KJ]	12.0	24.0	30.0	36.0	36.0	60.0	24.0 [1)]	24.0 [1)]	36.0 [1)]	36.0 [1)]
1800	Q_E	[KJ]	12.0	24.0	30.0	36.0	36.0	36.0 [1)]				
3000	Q_E	[KJ]	12.0	24.0	18.0 [1)]	11.0 [1)]	11.0 [1)]					
3600	Q_E	[KJ]	12.0	7.00 [1)]								
Transition operating frequency												
	$S_{hü}$	[1/h]	40.0	30.0	28.0	27.0	27.0	20.0	19.0	19.0	15.0	15.0
Moment of inertia												
	J	[kgcm²]	0.20	0.45	0.63	1.50	1.50	2.90	7.30	7.30	20.0	20.0
Mass												
	m	[kg]	2.60	4.20	5.80	8.70	8.70	12.6	19.5	19.5	31.0	31.0

[1)] In the region of the load limit the value for friction energy Q_{BW} can be reduced to 40 %.

5.10

► Activation via half-wave or bridge rectifier

Size			10	12	14	16		18	20		25	
Friction energy												
	Q_{BW}	[MJ]	198	353	253	563	241	578	1596	580	2465	1409
Delay time												
Engaging	t_{11}	[ms]	10.0	16.0	11.0	22.0	17.0	24.0	46.0	17.0	77.0	38.0
Rise time												
Braking torque	t_{12}	[ms]	19.0	25.0		30.0		45.0	100		120	
Engagement time												
	t_1	[ms]	29.0	41.0	36.0	52.0	47.0	69.0	146	117	197	158
Disengagement time												
	t_2	[ms]	109	193	308	297	435	356	378	470	451	532



Spring-applied brake

Manual release

By actuating the manual release lever, the brake can be released manually during operation at zero current. Manual release facilitates positioning and maintenance work.

Manual release lever for IEC motors

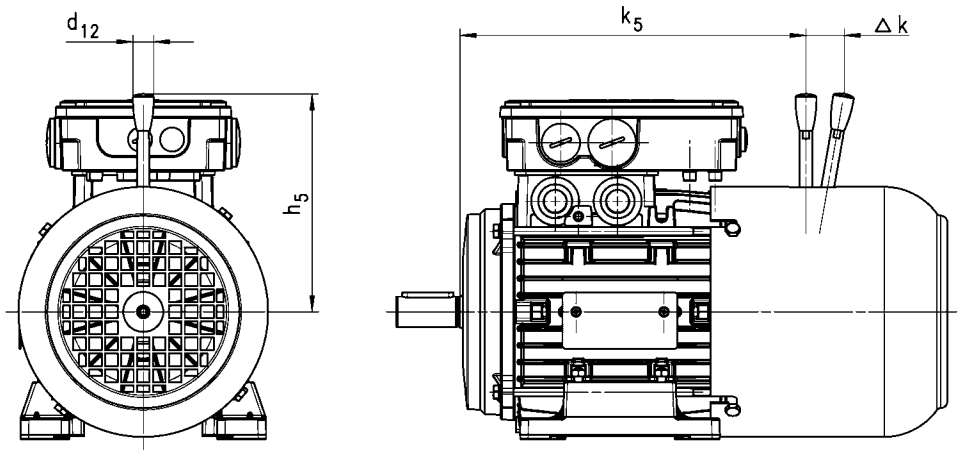

	Size	Dimensions			
	Brake				
		k_5	Δ k	h_5	d_{12}
		[mm]	[mm]	[mm]	[mm]
m200-P132M4	14 16	405 407	41 55	195 240	24.0 24.0
m200-P132L4	14 16	405 407	41 55	195 240	24.0 24.0
m200-P160M4	16 18	479 484	55 59	240 279	24.0 24.0
m200-P160L4	18	484	59	279	24.0
m200-P180M4	18 20	552 559	59 74	279 319	24.0 24.0
m200-P180L4	18 20	552 559	59 74	279 319	24.0 24.0
m200-P200M4	18 20	620 626	59 74	279 319	24.0 24.0
m200-P225M4	25	650	103	445	24.0
m200-P225L4	25	650	103	445	24.0



Spring-applied brake

Manual release

Manual release lever for geared motors

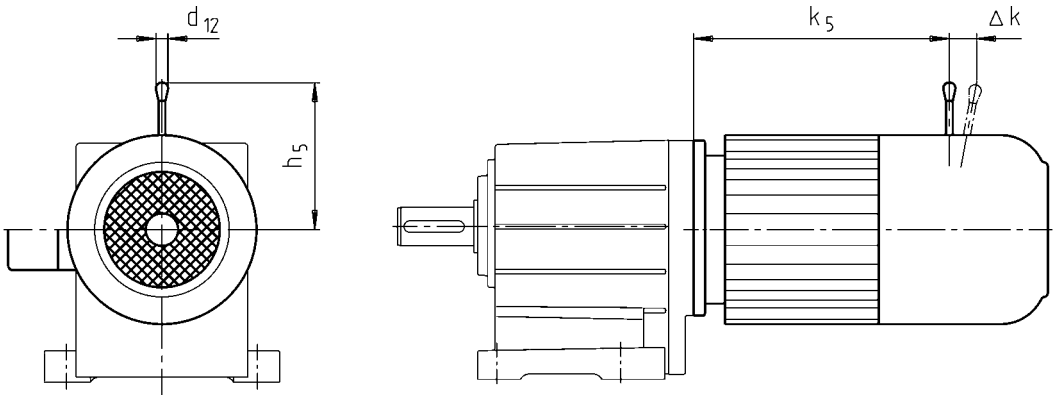

	Size	Dimensions			
	Brake				
		k_5	Δ k	h_5	d_{12}
		[mm]	[mm]	[mm]	[mm]
m200-P132M4	14 16	403 406	41 55	195 240	24.0 24.0
m200-P132L4	14 16	403 406	41 55	195 240	24.0 24.0
m200-P160M4	16 18	512 517	55 59	240 279	24.0 24.0
m200-P160L4	18	517	59	279	24.0
m200-P180M4	18 20	574 581	59 74	279 319	24.0 24.0
m200-P180L4	18 20	574 581	59 74	279 319	24.0 24.0
m200-P180V4	18 20	624 630	59 74	279 319	24.0 24.0
m200-P225M4	25	704	103	445	24.0
m200-P225L4	25	704	103	445	24.0



Temperature monitoring

To protect the motor against overheating, the following thermal sensors are provided.
The thermal sensors are integrated into the windings. We recommend using an additional motor protection switch.

TKO thermal contacts

The TCO thermal contact (thermal NC contact) is a bimetallic-element switch. The TCO monitors the motor winding temperature; at too high temperatures, the motor relay switches. The motor is disconnected from the mains.

Function	Operating temperature	Min. reset temperature	Max. reset temperature	Max. input current	Max. input voltage
					AC
	T	T_{min}	T_{max}	$I_{in,max}$	$U_{in,max}$
	-5 ... 5				
	[°C]	[°C]	[°C]	[A]	[V]
NC contact	150	90.0	135	2.50	250

PTC thermistor

The PTC thermistor is actuated in connection with a tripping unit. If the motor gets too hot, the motor can be switched off by means of a contactor. In contrast to the thermal contact, quick restart is possible.

Function	Operating temperature	Rated resistance			Standard
		155 °C	-20 °C	140 °C	
	T	R_N	R_N	R_N	
	-5 ... 5				
	[°C]	[Ω]	[Ω]	[Ω]	
Sudden change in resistance	150	550	30.0	250	DIN 44080 DIN VDE 0660 Part 303







13478278

Lenze SE
Hans-Lenze-Straße 1
D-31855 Aerzen
Phone: +49 (0)5154 82-0
Telefax: +49 (0)5154 82 28 00

www.Lenze.com